Flat compact cylinder single acting/push/single acting/pull

FCS Series/FCH Series

● Bore size: ø25/ø32/ø40/ø50/ø63

JIS symbol 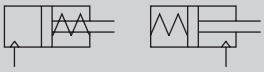

RoHS CAD

Specifications

Item	FCS FCS-L					FCH FCH-L				
Bore size mm	ø25 or equiv.	ø32 or equiv.	ø40 or equiv.	ø50 or equiv.	ø63 or equiv.	ø25 or equiv.	ø32 or equiv.	ø40 or equiv.	ø50 or equiv.	ø63 or equiv.
Actuation	Single acting push					Single acting pull				
Working fluid	Compressed air									
Max. working pressure MPa	0.7 (≈100 psi, 7 bar)									
Min. working pressure MPa	0.12 (≈17 psi, 1.2 bar)									
Proof pressure MPa	1.05 (≈150 psi, 10.5 bar)									
Ambient temperature °C	-10 (14°F) to 60 (140°F) (no freezing)									
Port size	M5		Rc1/8		Rc1/4	M5		Rc1/8		Rc1/4
Stroke tolerance mm	$^{+0.5}_{0}$ (to 50)									
Working piston speed mm/s	50 to 500									
Cushion	None									
Lubrication	Not required (turbine oil type 1 ISO VG32 if necessary for lubrication)									
Allowable absorbed energy J	0.015	0.02	0.026	0.04	0.05	0.015	0.02	0.026	0.04	0.05

Note: Do not leave the single acting cylinder pressurized for a long time. If it is left pressurized for long periods, the piston rod may not return due to spring load when the pressure is released.

Rotation-stop precision/Allowable torque

Item		ø25 or equiv.	ø32 or equiv.	ø40 or equiv.	ø50 or equiv.	ø63 or equiv.
Non-rotating accuracy	*2	±1°	±0.8°	±0.5°	±0.5°	±0.5°
Allowable torque	N·m	1	1.6	2.5	3.9	5.9

*1: Avoid applying rotation torque with impact, or with violent changes in torque load direction.*2: "Non-rotating

Stroke

Model No.	Bore size (mm)	Standard stroke (mm)	Max. stroke (mm)	Min. stroke (mm)
FCS	ø25, ø32 or equiv.	5, 10	10	1
FCH	ø40, ø50, ø63 or equiv.	10, 20	20	

*1: The custom stroke is available in 1mm increments.
*2: The min. stroke varies depending on switch mounting method. Refer to the following table.

Min. stroke with switch

1		2
Rod side installation	Head side installation	Different surface mounting
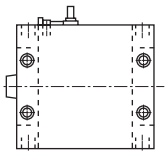	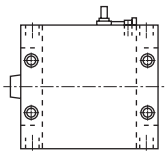	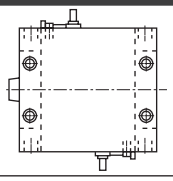
10 mm		15 mm

FCS/FCH spring load

(Unit: N)

Bore size (mm)	Stroke (mm)	When stroke = 0	At full stroke operation
ø25 or equiv.	5	27.4	35.3
	10	19.6	
ø32 or equiv.	5	36	47.5
	10	24.5	
ø40 or equiv.	10	38.5	47.6
	20	29.4	
ø50 or equiv.	10	56.5	74.9
	20	38.2	
ø63 or equiv.	10	92.2	119.8
	20	61.7	

Switch specifications

● Proximity switch

Item	2-wire proximity		3-wire proximity		
	M2V	M2WV (2-color LED)	M3V	M3PV (Made to order)	M3WV (2-color LED)
Applications	Dedicated for programmable controller		For programmable controller, relay, IC circuit, compact solenoid valve		
Output method	-	-	NPN output	PNP output	NPN output
Power supply voltage	-		4.5 to 28 VDC		10 to 28 VDC
Load voltage	10 to 30 VDC		30 VDC or less		
Load current	5 to 30 mA		100 mA or less	100 mA or less	100 mA or less
Indicator	LED (Lit when ON)	Red/green LED (Lit when ON)	LED (Lit when ON)	Yellow LED (Lit when ON)	Red/green LED (Lit when ON)
Leakage current	1 mA or less		10 μA or less	0.05 mA or less	10 μA or less
Weight g	1 m:22 3 m:57 5 m:93				

● Reed switch

Item	2-wire reed			
	M0V		M5V	
Applications	Programmable controller, relay		For programmable controller, relay, IC circuit (without indicator lamp), serial connection	
Power supply voltage	-		-	
Load voltage	12/24 VDC	110 VAC	5/12/24 VDC	110 VAC or less
Load current	5 to 50 mA	7 to 20 mA	50 mA or less	20 mA or less
Indicator	LED (Lit when ON)		No indicator lamp	
Leakage current	0 mA			
Weight g	1 m:22 3 m:57 5 m:93			

*1 : Refer to Ending Page 1 for other switch specifications.
*2 : Dimensions depend on switch model No. Refer to Ending Page 13 for details.

Cylinder weight

(Unit: g)

Item	Product weight when stroke (S) = 0 mm				Switch weight	Mounting bracket weight	Additional weight per S = 10 mm
	FCS		FCH				
Bore size (mm)	No switch	With switch	No switch	With switch			
ø25 or equiv.	155	217	135	197	Refer to the weight in the switch specifications.	2	26
ø32 or equiv.	220	310	190	280			37
ø40 or equiv.	345	468	310	433			46
ø50 or equiv.	545	733	485	673			71
ø63 or equiv.	1090	1226	965	976			90

(Example) Product weight of FCS-32-10
- ● Product weight when S = 0 mm.....220 g
- ● Additional weight when S = 10 mm .....37 g x $\frac{10}{10}$ = 37 g
- ● Product weight.....220 g + 37 g = 257 g

Theoretical thrust table

● FCS

(Unit: N)

Bore size (mm)	Working pressure MPa					
	0.2	0.3	0.4	0.5	0.6	0.7
ø25	63.2	$1.12x10^2$	$1.62x10^2$	$2.11x10^2$	$2.60x10^2$	$3.09x10^2$
ø32	$1.08x10^2$	$1.85x10^2$	$2.63x10^2$	$3.41x10^2$	$4.18x10^2$	$4.96x10^2$
ø40	$2.11x10^2$	$3.40x10^2$	$4.69x10^2$	$5.98x10^2$	$7.27x10^2$	$8.56x10^2$
ø50	$3.11x10^2$	$5.05x10^2$	$6.98x10^2$	$8.91x10^2$	$1.08x10^3$	$1.28x10^3$
ø63	$5.16x10^2$	$8.34x10^2$	$1.15x10^3$	$1.47x10^3$	$1.79x10^3$	$2.10x10^3$

● FCH

(Unit: N)

Bore size (mm)	Working pressure MPa					
	0.2	0.3	0.4	0.5	0.6	0.7
ø25	40.6	78.5	$1.16x10^2$	$1.54x10^2$	$1.92x10^2$	$2.30x10^2$
ø32	67.5	$1.25x10^2$	$1.83x10^2$	$2.40x10^2$	$2.98x10^2$	$3.55x10^2$
ø40	$1.70x10^2$	$2.79x10^2$	$3.88x10^2$	$4.97x10^2$	$6.06x10^2$	$7.15x10^2$
ø50	$2.49x10^2$	$4.10x10^2$	$5.72x10^2$	$7.34x10^2$	$8.96x10^2$	$1.06x10^3$
ø63	$4.53x10^2$	$7.39x10^2$	$1.03x10^3$	$1.31x10^3$	$1.60x10^3$	$1.88x10^3$

SCP*3
CMK2
CMA2
SCM
SCG
SCA2
SCS2
CKV2
CAV2/COVP/N2
SSD2
SSG
SSD
CAT
MDC2
MVC
SMG
MSD/MSDG
FC*
STK
SRL3
SRG3
SRM3
SRT3
MRL2
MRG2
SM-25
ShkAbs
FJ
FK
Spd Contr
Ending

How to order

No switch (without magnet for switch)

FCS - 25 ◯ - 10 ——— N

With switch (built-in magnet for switch)

FCS-L - 25 ◯ - 10 - M2V - R - N

Ⓐ Model No.
Ⓑ Bore size
Ⓒ Port thread
Ⓓ Stroke
Ⓔ Switch model No.
* indicates the lead wire length.
Ⓕ Switch quantity
Ⓖ Option *2

Code	Description
Ⓐ Model No.	
FCS	Single acting/push
FCS-L	Single acting/push/with switch
FCH	Single acting/pull
FCH-L	Single acting/pull/with switch

Ⓑ Bore size (mm)	
25	ø25
32	ø32
40	ø40
50	ø50
63	ø63

Ⓒ Port thread	
Blank	Rc thread
NN	NPT thread (ø40 or more) (made-to-order product)
GN	G thread (ø40 or more) (made-to-order product)

Ⓓ Stroke (mm)

Bore size	Stroke *1	Custom stroke
ø25,ø32	**1 to 10**	**In 1 mm increments**
ø40 to ø63	**1 to 20**	

Ⓔ Switch model No.

Radial lead wire	Contact	Voltage AC	Voltage DC	Indicator	Lead wire
M2V*	Proximity		●	1-color LED	2-wire
M2WV*			●	2-color LED	
M3V*			●	1-color LED	3-wire
M3WV*			●	2-color LED	
M3PV*			●	1-color LED (made to order)	3-wire
M0V*	Reed	●	●	1-color LED	2-wire
M5V*		●	●	No indicator lamp	

*** Lead wire length**	
Blank	1 m (standard)
3	3 m (option)
5	5 m (option)

Ⓕ Switch quantity	
R	1 on rod side
H	1 on head side
D	2

Ⓖ Option	
Blank	Rod end female thread
M	Piston rod material (stainless steel)
N	Rod end male thread
R	With spigot
P6	Copper and PTFE free (copper-based/Teflon-based material is not used)

⚠ Precautions for model No. selection

*1 : Refer to page 1480 for the min. stroke with switch.
*2 : Dimensions of copper and PTFE free "P6" are the same as those of the standard.

[Example of model No.]

FCS-L-25-10-M2V-R-M

Model: Flat compact cylinder

Ⓐ Model No. : Single acting/push
Ⓑ Bore size : ø25 mm
Ⓒ Port thread : Rc thread
Ⓓ Stroke : 10 mm
Ⓔ Switch model No. : Proximity switch M2V
Ⓕ Switch quantity : 1 on rod side
Ⓖ Option : Piston rod material (stainless steel)

How to order switch

● Switch body + mounting bracket set

FCS - M2V

Switch model No.
(Item Ⓔ on page 1482)

● Switch body only

SW - M2V

Switch model No.
(Item Ⓔ on page 1482)

● Mounting bracket set

FCS - M

Mounting bracket

SCP*3
CMK2
CMA2
SCM
SCG
SCA2
SCS2
CKV2
CAV2/COVP/N2
SSD2
SSG
SSD
CAT
MDC2
MVC
SMG
MSD/MSDG
FC*
STK
SRL3
SRG3
SRM3
SRT3
MRL2
MRG2
SM-25
ShkAbs
FJ
FK
Spd Contr
Ending

Internal structure and parts list

● FCS-L (single acting/push, with switch)

* ø25 to ø40 or equiv.

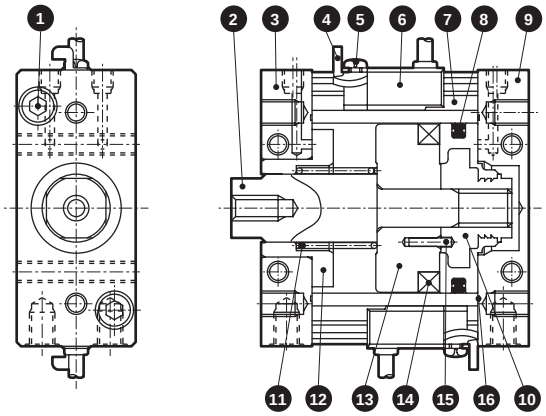

* ø50 to ø63 or equiv.

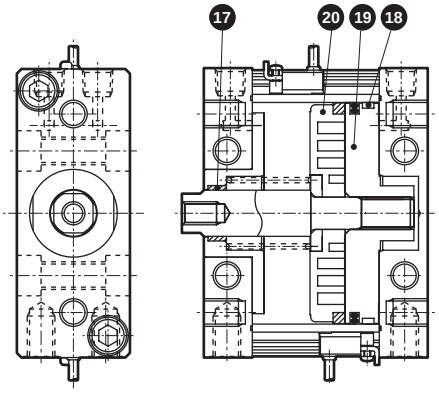

● FCS (Single acting/push)

* ø25 to ø40 or equiv.

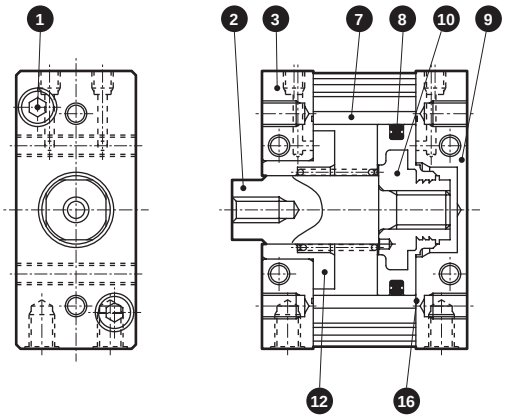

* ø50 to ø63 or equiv.

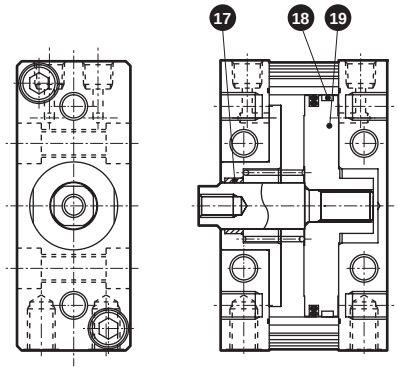

No.	Part name	Material	Remarks	No.	Part name	Material	Remarks
1	Hexagon socket head cap screw	Steel	Zinc chromate	11	Spring	Steel	Electrodeposition
2	Piston rod	Steel	Industrial chrome plating	12	Bush spacer	Aluminum alloy	Alumite
3	Rod cover	Aluminum alloy	Black alumite	13	Spacer	Aluminum alloy	
4	Switch mounting bracket	Stainless steel		14	Magnet		
5	Cross-recessed pan head machine screw	Steel	Zinc chromate	15	Spring pin	Steel	
6	Switch			16	Cover gasket	Nitrile rubber	
7	Tube	Aluminum alloy	Hard alumite	17	Bush	Aluminum alloy	Alumite
8	Piston packing	Nitrile rubber		18	Wear ring	Acetal resin	ø63 only
9	Head cover	Aluminum alloy	Black alumite	19	Piston	Aluminum alloy	Chromate
10	Piston	Aluminum alloy + Acetal resin		20	Spacer	Aluminum alloy	ø50
						Polyamide resin	ø63

Repair parts list (common to types with/without switch)

Bore size (mm)	Kit No.	Repair parts No.
ø25 or equiv.	FCS-25K	8 16
ø32 or equiv.	FCS-32K	
ø40 or equiv.	FCS-40K	
ø50 or equiv.	FCS-50K	
ø63 or equiv.	FCS-63K	8 16 18

Internal structure and parts list

● FCH-L (single acting/pull, with switch)

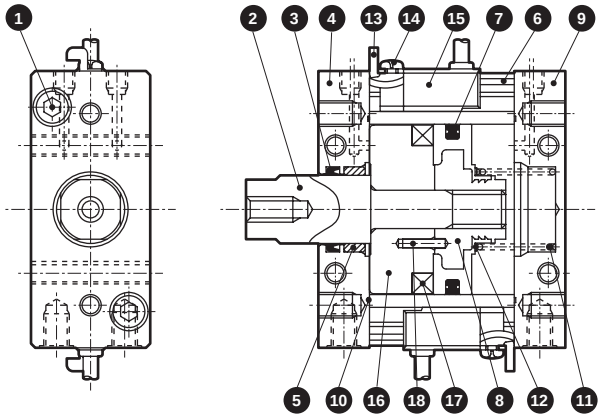

● FCH

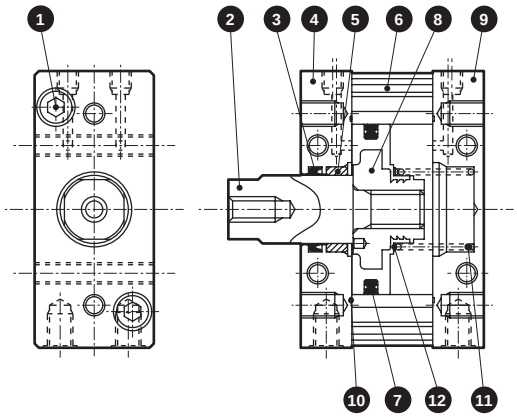

ø63

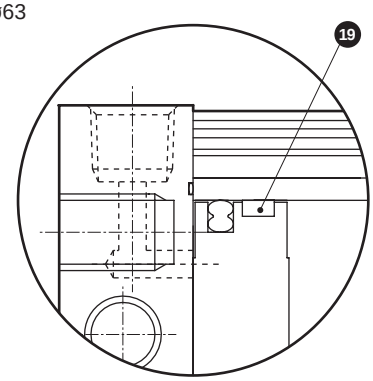

No.	Part name	Material	Remarks	No.	Part name	Material	Remarks
1	Hexagon socket head cap screw	Steel	Zinc chromate	10	Cover gasket	Nitrile rubber	
2	Piston rod	Steel	Industrial chrome plating	11	Spring	Steel	Electrodeposition
3	Rod packing	Nitrile rubber		12	Spring holder	Stainless steel	
4	Rod cover	Aluminum alloy	Black alumite	13	Switch mounting bracket	Stainless steel	
5	Bush	Special bearing material	*1	14	Cross-recessed pan head machine screw	Steel	Zinc chromate
6	Tube	Aluminum alloy	Hard alumite	15	Switch		
7	Piston packing	Nitrile rubber		16	Spacer	Aluminum alloy	ø25 to ø50
8	Piston	Aluminum alloy + Acetal resin	ø25 to ø50			Polyamide resin	ø63
				17	Magnet		
		Aluminum alloy	ø63: Chromate	18	Spring pin	Steel	
9	Head cover	Aluminum alloy	Black alumite	19	Wear ring	Acetal resin	

*1: Special aluminum for copper and PTFE free.

Repair parts list (common to types with/without switch)

Bore size (mm)	Kit No.	Repair parts No.
ø25 or equiv.	FCH-25K	3 7 10
ø32 or equiv.	FCH-32K	
ø40 or equiv.	FCH-40K	
ø50 or equiv.	FCH-50K	
ø63 or equiv.	FCH-63K	3 7 10 19

SCP*3
CMK2
CMA2
SCM
SCG
SCA2
SCS2
CKV2
CAV2/COVP/N2
SSD2
SSG
SSD
CAT
MDC2
MVC
SMG
MSD/MSDG
FC*
STK
SRL3
SRG3
SRM3
SRT3
MRL2
MRG2
SM-25
ShkAbs
FJ
FK
Spd Contr
Ending

Dimensions

● FCS-L (single acting/push, with switch)

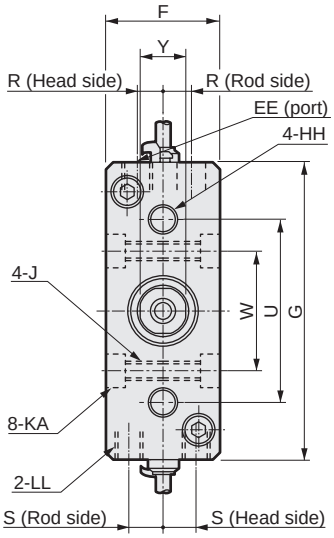

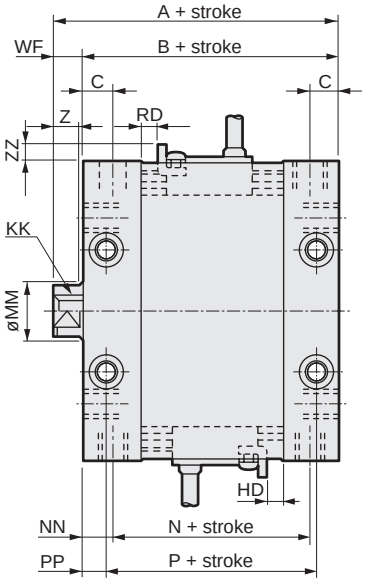

● Dimensions of rod end male thread (Option code N)

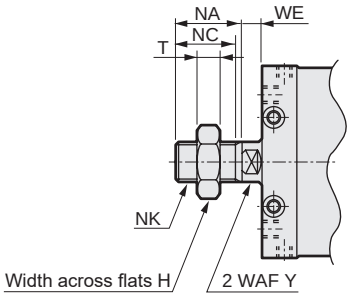

*1: This figure shows FCS-L-40.
*2: Position for Y section 2 WAF is unspecified.

● FCS (without switch)

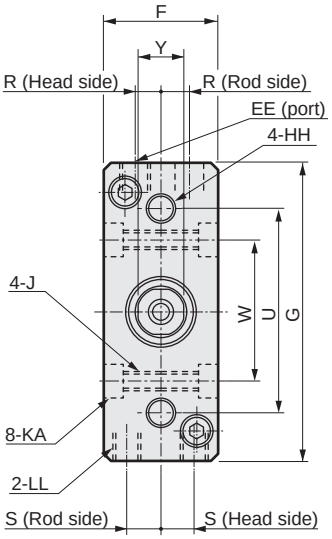

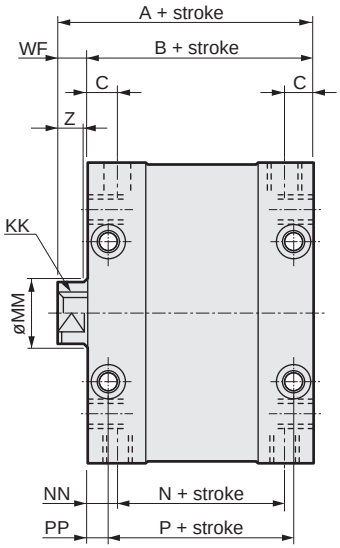

*1: This figure shows FCS-40.
*2: Position for Y section 2 WAF is unspecified.

Code / Bore size (mm)	Dimensions without switch				Dimensions with switch				Common dimensions						
	A	B	N	P	A	B	N	P	C	EE	F	G	HH	J	KA
ø25 or equiv.	42	37	25	29	57	52	40	44	7.5	M5 depth 4	25	55	M5 depth 7	M5 (through)	-
ø32 or equiv.	45	38	26	30	60	53	41	45	7.5	M5 depth 4	28	65	M6 depth 8	M5 (through)	-
ø40 or equiv.	54	46	30	34	69	61	45	49	8.5	Rc1/8	32	83	M8 depth 10	M6 (through)	9.5 spot face depth 5.4
ø50 or equiv.	60.5	51	34	32	75.5	66	49	47	10.5	Rc1/8	39	101	M10 depth 12	M8 (through)	11 spot face depth 6.5
ø63 or equiv.	71.5	62	42	42	86.5	77	57	57	11.5	Rc1/4	49	125	M12 depth 15	M12 (through)	17.5 spot face depth 10.5

Code / Bore size (mm)	Common dimensions with switch														
	KK	LL	MM	NN	PP	R	S	U	W	WF	ZZ	RD	HD	Y	Z
ø25 or equiv.	M5 depth 9	M5 depth 7	12	6	4	4.7	7	38	24	5	5.5 or less	3.5	0	10	5
ø32 or equiv.	M6 depth 11	M6 depth 8	16	6	4	6.2	8	45	30	7	5.5 or less	4.5	0	14	7
ø40 or equiv.	M8 depth 13	M8 depth 10	16	8	6	7.5	9	52	34	8	5.5 or less	4.5	0	14	7
ø50 or equiv.	M8 depth 13	M10 depth 12	20	8.5	9.5	9	10	62	40	9.5	5.5 or less	4.5	0.5	17	8
ø63 or equiv.	M10 depth 15	M12 depth 18	20	10	10	10.5	14	86	54	9.5	5.5 or less	4.5	4.5	17	8

● Rod end male thread dimensions

Code / Bore size (mm)	H	NA	NC	NK	T	WE
ø25 or equiv.	17	22	20	M10x1.25	6	5
ø32 or equiv.	22	22	20	M14x1.5	8	7
ø40 or equiv.	22	22	20	M14x1.5	8	7
ø50 or equiv.	27	28	26	M18x1.5	11	8
ø63 or equiv.	27	28	26	M18x1.5	11	8

Dimensions

● FCH-L (single acting/pull, with switch)

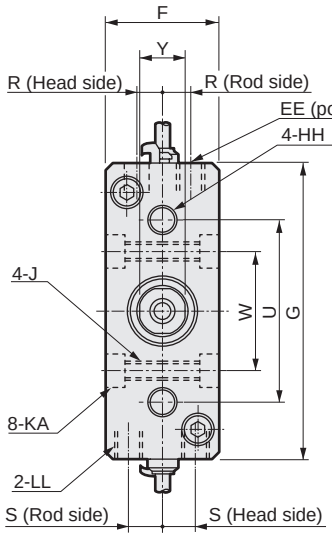

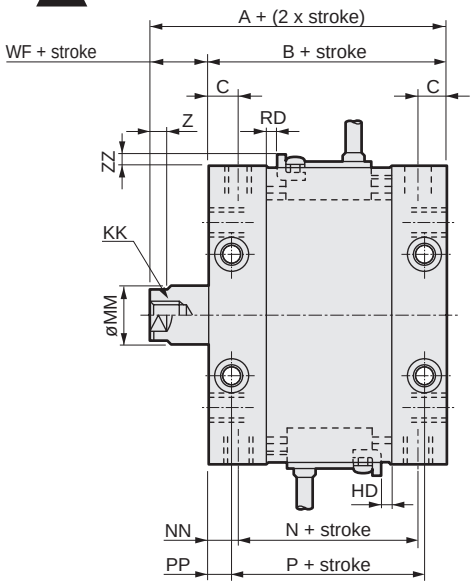

● Dimensions of rod end male thread (Option code: N)

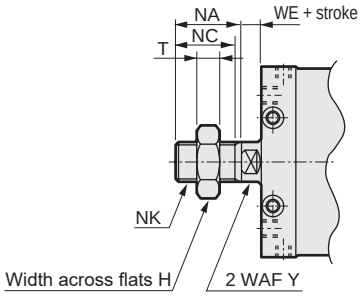

*1: This figure shows FCH-L-40.
*2: Position for Y section 2 WAF is unspecified.

● FCH (without switch)

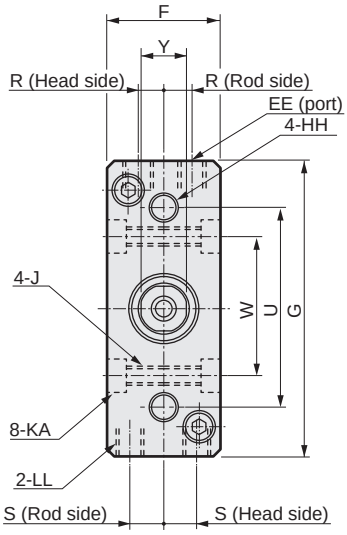

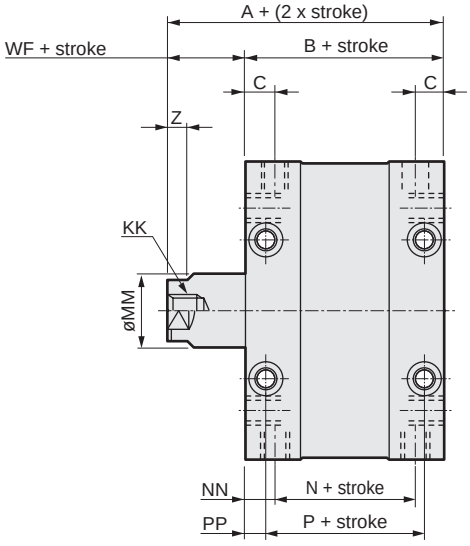

*1: This figure shows FCH-40.
*2: Position for Y section 2 WAF is unspecified.

Code / Bore size (mm)	Dimensions without switch A	B	N	P	Dimensions with switch A	B	N	P	Common dimensions C	EE	F	G	HH	J	KA
ø25 or equiv.	37	32	20	24	52	47	35	39	7.5	M5 depth 4	25	55	M5 depth 7	M5 (through)	-
ø32 or equiv.	40	33	21	25	55	48	36	40	7.5	M5 depth 4	28	65	M6 depth 8	M5 (through)	-
ø40 or equiv.	49	41	25	29	64	56	40	44	8.5	Rc1/8	32	83	M8 depth 10	M6 (through)	9.5 spot face depth 5.4
ø50 or equiv.	55.5	46	29	27	70.5	61	44	42	10.5	Rc1/8	39	101	M10 depth 12	M8 (through)	11 spot face depth 6.5
ø63 or equiv.	66.5	57	37	37	81.5	72	52	52	11.5	Rc1/4	49	125	M12 depth 15	M12 (through)	17.5 spot face depth 10.5

Code / Bore size (mm)	Common dimensions with switch KK	LL	MM	NN	PP	R	S	U	W	WF	ZZ	RD	HD	Y	Z
ø25 or equiv.	M5 depth 9	M5 depth 7	12	6	4	4.7	7	38	24	5	5.5 or less	0	0	10	5
ø32 or equiv.	M6 depth 11	M6 depth 8	16	6	4	6.2	8	45	30	7	5.5 or less	0	0	14	7
ø40 or equiv.	M8 depth 13	M8 depth 10	16	8	6	7.5	9	52	34	8	5.5 or less	0	0	14	7
ø50 or equiv.	M8 depth 13	M10 depth 12	20	8.5	9.5	9	10	62	40	9.5	5.5 or less	0	0.5	17	8
ø63 or equiv.	M10 depth 15	M12 depth 18	20	10	10	10.5	14	86	54	9.5	5.5 or less	0	4.5	17	8

● Rod end male thread dimensions

Code / Bore size (mm)	H	NA	NC	NK	T	WE
ø25 or equiv.	17	22	20	M10x1.25	6	5
ø32 or equiv.	22	22	20	M14x1.5	8	7
ø40 or equiv.	22	22	20	M14x1.5	8	7
ø50 or equiv.	27	28	26	M18x1.5	11	8
ø63 or equiv.	27	28	26	M18x1.5	11	8

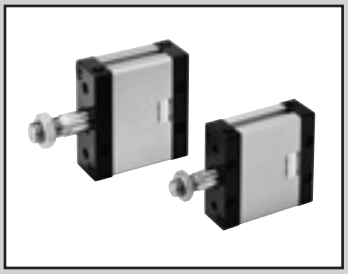

Flat compact cylinder double acting/single rod

FCD Series

● Bore size: ø25/ø32/ø40/ø50/ø63

JIS symbol 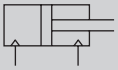

RoHS CAD

Specifications

Item	FCD FCD-L				
Bore size mm	ø25 or equiv.	ø32 or equiv.	ø40 or equiv.	ø50 or equiv.	ø63 or equiv.
Actuation	Double acting				
Working fluid	Compressed air				
Max. working pressure MPa	0.7 (≈100 psi, 7 bar)				
Min. working pressure MPa	0.07 (≈10 psi, 0.7 bar)				
Proof pressure MPa	1.05 (≈150 psi, 10.5 bar)				
Ambient temperature °C	-10 (14°F) to 60 (140°F) (no freezing)				
Port size	M5		Rc1/8		Rc1/4
Stroke tolerance mm	$^{+0.5}_{0}$ (to 50)				
Working piston speed mm/s	50 to 500				
Cushion	None				
Lubrication	Not required (turbine oil type 1 ISO VG32 if necessary for lubrication)				
Allowable absorbed energy J	0.015	0.02	0.026	0.04	0.05

Rotation-stop precision/Allowable torque

Item	ø25 or equiv.	ø32 or equiv.	ø40 or equiv.	ø50 or equiv.	ø63 or equiv.
Non-rotating accuracy *2	±1°	±0.8°	±0.5°	±0.5°	±0.5°
Allowable torque N·m	1	1.6	2.5	3.9	5.9

*1: Avoid applying rotation torque with impact, or with violent changes in torque load direction.*2: "Non-rotating

Stroke

Model No.	Bore size (mm)	Standard stroke (mm)	Max. stroke (mm)	Min. stroke (mm)
FCD	ø25, ø32 ø40, ø50 ø63 or equiv.	5/10/15/20/25 30/40/50	50	1

*1: The custom stroke is available in 1mm increments.
*2: The min. stroke varies depending on switch mounting method. Refer to the following table.

Min. stroke with switch

1		2	
Rod side installation	Head side installation	Different surface mounting	Same surface mounting
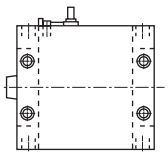	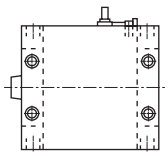	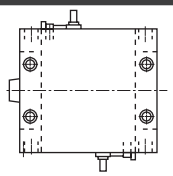	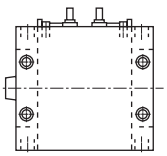
10 mm		15 mm	35 mm (ø25/32/40/50) 30 mm (ø63)

Switch specifications

● Proximity switch

Item	2-wire proximity		3-wire proximity		
	M2V	M2WV (2-color LED)	M3V	M3PV (Made to order)	M3WV (2-color LED)
Applications	Dedicated for programmable controller		Programmable controller, relay, IC circuit, small solenoid valve		
Output method	-	-	NPN output	PNP output	NPN output
Power supply voltage	-		4.5 to 28 VDC		10 to 28 VDC
Load voltage	10 to 30 VDC		30 VDC or less		
Load current	5 to 30 mA		100 mA or less	100 mA or less	100 mA or less
Indicator	LED (Lit when ON)	Red/green LED (Lit when ON)	LED (Lit when ON)	Yellow LED (Lit when ON)	Red/green LED (Lit when ON)
Leakage current	1 mA or less		10 μA or less	0.05 mA or less	10 μA or less
Weight g	1 m:22 3 m:57 5 m:93				

● Reed switch

Item	2-wire reed			
	M0V		M5V	
Applications	Programmable controller, relay		For programmable controller, relay, IC circuit (without indicator lamp), serial connection	
Power supply voltage	-		-	
Load voltage	12/24 VDC	110 VAC	5/12/24 VDC	110 VAC or less
Load current	5 to 50 mA	7 to 20 mA	50 mA or less	20 mA or less
Indicator	LED (Lit when ON)		No indicator lamp	
Leakage current	0 mA			
Weight g	1 m:22 3 m:57 5 m:93			

*1: Refer to Ending Page 1 for other switch specifications.
*2: Dimensions depend on switch model No. Refer to Ending Page 13 for details.

Cylinder weight

(Unit: g)

Item	Product weight when stroke (S) = 0 mm		Switch weight	Mounting bracket weight	Additional weight per S = 10 mm
	FCD				
Bore size (mm)	No switch	With switch			
ø25 or equiv.	130	192	Refer to the weight in the switch specifications.	2	26
ø32 or equiv.	185	275			37
ø40 or equiv.	300	423			46
ø50 or equiv.	470	658			71
ø63 or equiv.	950	1086			90

(Example) Product weight of FCD-32-20
- ● Product weight when S = 0 mm……185 g
- ● Additional weight when S = 20 mm ……37 g x $\frac{20}{10}$ = 74 g
- ● Product weight……185 g + 74 g = 259 g

Theoretical thrust table

(Unit: N)

Bore size (mm)	Operating direction	Working pressure MPa							
		0.1	0.15	0.2	0.3	0.4	0.5	0.6	0.7
ø25	Push	49.3	73.9	98.5	1.48×10^2	1.97×10^2	2.46×10^2	2.96×10^2	3.45×10^2
	Pull	37.9	56.9	75.9	1.14×10^2	1.52×10^2	1.90×10^2	2.28×10^2	2.66×10^2
ø32	Push	77.6	1.16×10^2	1.55×10^2	2.33×10^2	3.10×10^2	3.88×10^2	4.66×10^2	5.43×10^2
	Pull	57.5	86.3	1.15×10^2	1.73×10^2	2.30×10^2	2.88×10^2	3.45×10^2	4.03×10^2
ø40	Push	1.29×10^2	1.94×10^2	2.58×10^2	3.87×10^2	5.16×10^2	6.45×10^2	7.75×10^2	9.04×10^2
	Pull	1.09×10^2	1.63×10^2	2.18×10^2	3.27×10^2	4.36×10^2	5.45×10^2	6.54×10^2	7.63×10^2
ø50	Push	1.93×10^2	2.90×10^2	3.86×10^2	5.80×10^2	7.73×10^2	9.66×10^2	1.16×10^3	1.35×10^3
	Pull	1.62×10^2	2.43×10^2	3.24×10^2	4.85×10^2	6.47×10^2	8.09×10^2	9.71×10^2	1.13×10^3
ø63	Push	3.18×10^2	4.77×10^2	6.36×10^2	9.53×10^2	1.27×10^3	1.59×10^3	1.91×10^3	2.22×10^3
	Pull	2.86×10^2	4.30×10^2	5.73×10^2	8.59×10^2	1.15×10^3	1.43×10^3	1.72×10^3	2.00×10^3

SCP*3
CMK2
CMA2
SCM
SCG
SCA2
SCS2
CKV2
CAV2/COVP/N2
SSD2
SSG
SSD
CAT
MDC2
MVC
SMG
MSD/MSDG
FC*
STK
SRL3
SRG3
SRM3
SRT3
MRL2
MRG2
SM-25
ShkAbs
FJ
FK
Spd Contr
Ending

How to order

No switch (without magnet for switch)

FCD - 25 ◯ - 10 ——— N

With switch (built-in magnet for switch)

FCD-L - 25 ◯ - 10 - M2V - R - N

Ⓐ Model No.
Ⓑ Bore size
Ⓒ Port thread
Ⓓ Stroke
Ⓔ Switch model No.
* indicates the lead wire length.
Ⓕ Switch quantity
Ⓖ Option
*2

Code	Description
Ⓐ Model No.	
FCD	Double acting
FCD-L	Double acting/with switch

Ⓑ Bore size (mm)	
25	ø25
32	ø32
40	ø40
50	ø50
63	ø63

Ⓒ Port thread	
Blank	Rc thread
NN	NPT thread (ø40 or more) (made-to-order product)
GN	G thread (ø40 or more) (made-to-order product)

Ⓓ Stroke (mm)

Bore size	Stroke *1	Custom stroke
ø25 to ø63	**1 to 50**	**In 1 mm increments**

Ⓔ Switch model No.

Radial lead wire	Contact	Voltage AC	Voltage DC	Indicator	Lead wire
M2V*	Proximity		●	1-color LED	2-wire
M2WV*			●	2-color LED	
M3V*			●	1-color LED	3-wire
M3WV*			●	2-color LED	
M3PV*			●	1-color LED (made to order)	
M0V*	Reed	●	●	1-color LED	2-wire
M5V*		●	●	No indicator lamp	

*** Lead wire length**	
Blank	1 m (standard)
3	3 m (option)
5	5 m (option)

Ⓕ Switch quantity	
R	1 on rod side
H	1 on head side
D	2
T	3

Ⓖ Option	
Blank	Rod end female thread
M	Piston rod material (stainless steel)
N	Rod end male thread
R	With spigot
P6	Copper and PTFE free (copper-based/Teflon-based material is not used)

⚠ Precautions for model No. selection

*1 : Refer to page 1488 for the min. stroke with switch.
*2 : Dimensions of copper and PTFE free "P6" are the same as those of the standard.

[Example of model No.]

FCD-L-25-10-M2V-R-M

Model: Flat compact cylinder

Ⓐ Model No. : Double acting/with switch
Ⓑ Bore size : ø25 mm
Ⓒ Port thread : Rc thread
Ⓓ Stroke : 10 mm
Ⓔ Switch model No. : Proximity switch M2V
Ⓕ Switch quantity : 1 on rod side
Ⓖ Option : Piston rod material (stainless steel)

How to order switch

● Switch body + mounting bracket set

FCS - M2V

Switch model No.
(Item Ⓔ on page 1490)

● Switch body only

SW - M2V

Switch model No.
(Item Ⓔ on page 1490)

● Mounting bracket set

FCS - M

Mounting bracket

SCP*3
CMK2
CMA2
SCM
SCG
SCA2
SCS2
CKV2
CAV2/COVP/N2
SSD2
SSG
SSD
CAT
MDC2
MVC
SMG
MSD/MSDG
FC*
STK
SRL3
SRG3
SRM3
SRT3
MRL2
MRG2
SM-25
ShkAbs
FJ
FK
Spd Contr
Ending

Internal structure and parts list

● FCD-L (with switch)

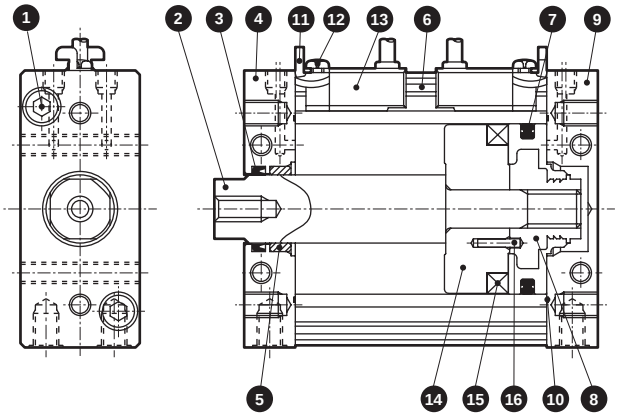

● FCD

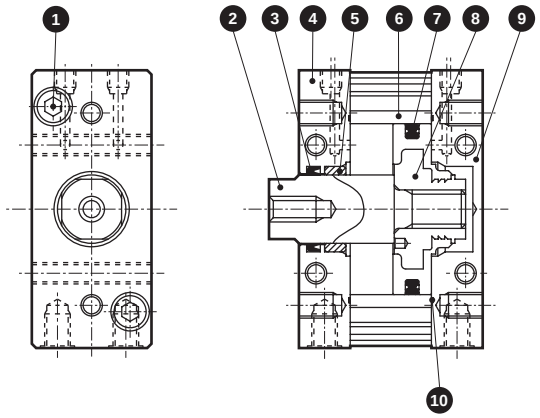

ø63

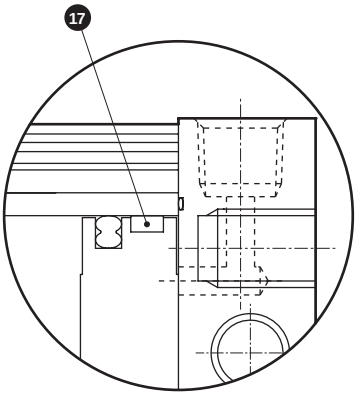

No.	Part name	Material	Remarks	No.	Part name	Material	Remarks
1	Hexagon socket head cap screw	Steel	Zinc chromate	9	Head cover	Aluminum alloy	Black alumite
2	Piston rod	Steel	Industrial chrome plating	10	Cover gasket	Nitrile rubber	
3	Rod packing	Nitrile rubber		11	Switch mounting bracket	Stainless steel	
4	Rod cover	Aluminum alloy	Black alumite	12	Cross-recessed pan head machine screw	Steel	Zinc chromate
5	Bush	Special bearing material	*1	13	Switch		
6	Tube	Aluminum alloy	Hard alumite	14	Spacer	Aluminum alloy	ø25 to ø50
7	Piston packing	Nitrile rubber				Polyamide resin	ø63
8	Piston	Aluminum alloy + Acetal resin	ø25 to ø50	15	Magnet		
				16	Spring pin	Steel	
		Aluminum alloy	ø63: Chromate	17	Wear ring	Acetal resin	

*1: Special aluminum for copper and PTFE free.

Repair parts list (common to types with/without switch)

Bore size (mm)	Kit No.	Repair parts No.
ø25 or equiv.	FCD-25K	3 7 10
ø32 or equiv.	FCD-32K	
ø40 or equiv.	FCD-40K	
ø50 or equiv.	FCD-50K	
ø63 or equiv.	FCD-63K	3 7 10 17

Dimensions

● FCD-L (double acting with switch)

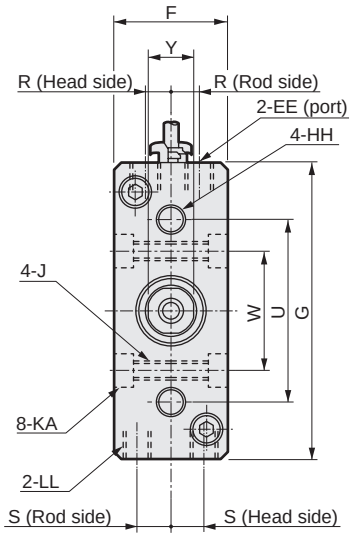

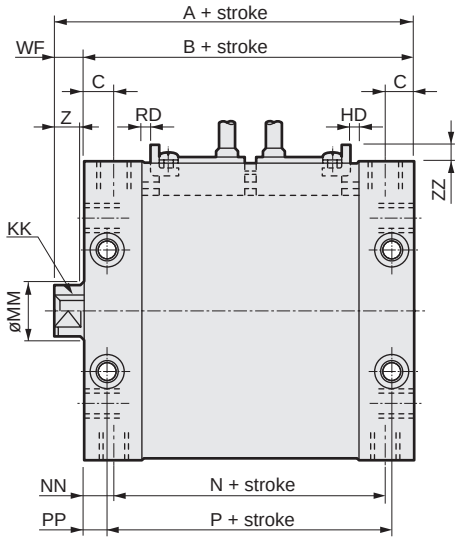

● Dimensions of rod end male thread (Option code N)

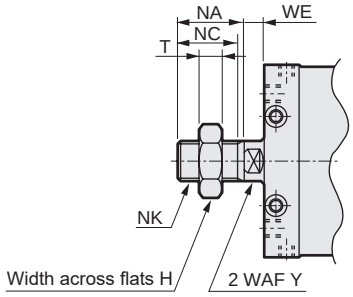

*1: This figure shows FCD-L-40.
*2: For same-surface installation with 2 switches, the stroke of 35 mm and over for ø25 to ø50 equivalent or 30 mm and over for ø63 equivalent is required. For the stroke of that value or less, set on both sides.
*3: Position for Y section 2 WAF is unspecified.

● FCD (No switch)

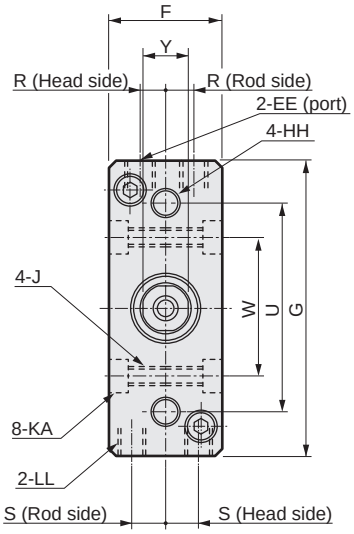

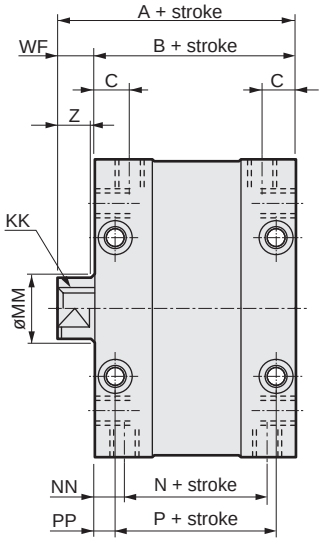

*1: This figure shows FCD-40.
*2: Position for Y section 2 WAF is unspecified.

Code / Bore size (mm)	Dimensions without switch A	B	N	P	Dimensions with switch A	B	N	P	Common dimensions C	EE	F	G	HH	J	KA
ø25 or equiv.	37	32	20	24	52	47	35	39	7.5	M5 depth 4	25	55	M5 depth 7	M5 (through)	-
ø32 or equiv.	40	33	21	25	55	48	36	40	7.5	M5 depth 4	28	65	M6 depth 8	M5 (through)	-
ø40 or equiv.	49	41	25	29	64	56	40	44	8.5	Rc1/8	32	83	M8 depth 10	M6 (through)	9.5 spot face depth 5.4
ø50 or equiv.	55.5	46	29	27	70.5	61	44	42	10.5	Rc1/8	39	101	M10 depth 12	M8 (through)	11 spot face depth 6.5
ø63 or equiv.	66.5	57	37	37	81.5	72	52	52	11.5	Rc1/4	49	125	M12 depth 15	M12 (through)	17.5 spot face depth 10.5

Code / Bore size (mm)	Common dimensions with switch KK	LL	MM	NN	PP	R	S	U	W	WF	ZZ	RD	HD	Y	Z
ø25 or equiv.	M5 depth 9	M5 depth 7	12	6	4	4.7	7	38	24	5	5.5 or less	0	0	10	5
ø32 or equiv.	M6 depth 11	M6 depth 8	16	6	4	6.2	8	45	30	7	5.5 or less	0	0	14	7
ø40 or equiv.	M8 depth 13	M8 depth 10	16	8	6	7.5	9	52	34	8	5.5 or less	0	0	14	7
ø50 or equiv.	M8 depth 13	M10 depth 12	20	8.5	9.5	9	10	62	40	9.5	5.5 or less	0	0.5	17	8
ø63 or equiv.	M10 depth 15	M12 depth 18	20	10	10	10.5	14	86	54	9.5	5.5 or less	0	4.5	17	8

● Rod end male thread dimensions

Code / Bore size (mm)	H	NA	NC	NK	T	WE
ø25 or equiv.	17	22	20	M10x1.25	6	5
ø32 or equiv.	22	22	20	M14x1.5	8	7
ø40 or equiv.	22	22	20	M14x1.5	8	7
ø50 or equiv.	27	28	26	M18x1.5	11	8
ø63 or equiv.	27	28	26	M18x1.5	11	8

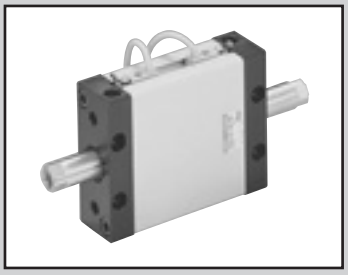

Flat compact cylinder double acting/double rod

FCD-D Series

● Bore size: ø25/ø32/ø40/ø50/ø63

JIS symbol 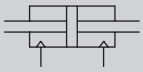

RoHS CAD

Specifications

Item	FCD-D FCD-DL				
Bore size mm	ø25 or equiv.	ø32 or equiv.	ø40 or equiv.	ø50 or equiv.	ø63 or equiv.
Actuation	Double acting/double rod				
Working fluid	Compressed air				
Max. working pressure MPa	0.7 (≈100 psi, 7 bar)				
Min. working pressure MPa	0.10 (≈15 psi, 1 bar)				
Proof pressure MPa	1.05 (≈150 psi, 10.5 bar)				
Ambient temperature °C	-10 (14°F) to 60 (140°F) (no freezing)				
Port size	M5		Rc1/8		Rc1/4
Stroke tolerance mm	$^{+0.5}_{0}$ (to 50)				
Working piston speed mm/s	50 to 500				
Cushion	None				
Lubrication	Not required (turbine oil type 1 ISO VG32 if necessary for lubrication)				
Allowable absorbed energy J	0.015	0.02	0.026	0.04	0.05

Rotation-stop precision/Allowable torque

Item	ø25 or equiv.	ø32 or equiv.	ø40 or equiv.	ø50 or equiv.	ø63 or equiv.
Non-rotating accuracy *2	±1°	±0.8°	±0.5°	±0.5°	±0.5°
Allowable torque N·m	1	1.6	2.5	3.9	5.9

*1: Avoid applying rotation torque with impact, or with violent changes in torque load direction.*2: "Non-rotating

Stroke

Model No.	Bore size (mm)	Standard stroke (mm)	Max. stroke (mm)	Min. stroke (mm)
FCD-D	ø25,ø32 ø40,ø50 ø63 or equiv.	5/10/15/20/25 30/40/50	50	1

*1: The custom stroke is available in 1mm increments.
*2: The min. stroke varies depending on switch mounting method. Refer to the following table.

Min. stroke with switch

1		2	
Rod side installation	Head side installation	Different surface mounting	Same surface mounting
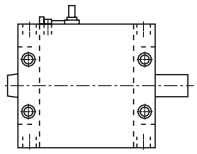	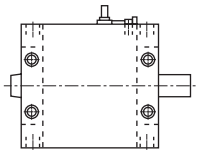	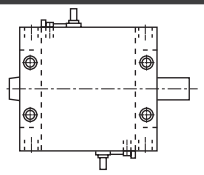	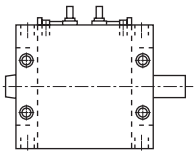
10 mm		15 mm	35 mm (ø25/32/40/50) 30 mm (ø63)

Switch specifications

● Proximity switch

Item	2-wire proximity		3-wire proximity		
	M2V	M2WV (2-color LED)	M3V	M3PV (Made to order)	M3WV (2-color LED)
Applications	Dedicated for programmable controller		Programmable controller, relay, IC circuit, small solenoid valve		
Output method	-	-	NPN output	PNP output	NPN output
Power supply voltage	-		4.5 to 28 VDC		10 to 28 VDC
Load voltage	10 to 30 VDC		30 VDC or less		
Load current	5 to 30 mA		100 mA or less	100 mA or less	100 mA or less
Indicator	LED (Lit when ON)	Red/green LED (Lit when ON)	LED (Lit when ON)	Yellow LED (Lit when ON)	Red/green LED (Lit when ON)
Leakage current	1 mA or less		10 μA or less	0.05 mA or less	10 μA or less
Weight g	1 m:22 3 m:57 5 m:93				

● Reed switch

Item	2-wire reed			
	M0V		M5V	
Applications	Programmable controller, relay		For programmable controller, relay, IC circuit (without indicator lamp), serial connection	
Power supply voltage	-		-	
Load voltage	12/24 VDC	110 VAC	5/12/24 VDC	110 VAC or less
Load current	5 to 50 mA	7 to 20 mA	50 mA or less	20 mA or less
Indicator	LED (Lit when ON)		No indicator lamp	
Leakage current	0 mA			
Weight g	1 m:22 3 m:57 5 m:93			

*1: Refer to Ending Page 1 for other switch specifications.
*2: Dimensions depend on switch model No. Refer to Ending Page 13 for details.

Cylinder weight

(Unit: g)

Item	Product weight when stroke (S) = 0 mm		Switch weight	Mounting bracket weight	Additional weight per S = 10 mm
	FCD-D				
Bore size (mm)	No switch	With switch			
ø25 or equiv.	145	220	Refer to the weight in the switch specifications.	2	35
ø32 or equiv.	215	330			53
ø40 or equiv.	330	478			62
ø50 or equiv.	545	773			96
ø63 or equiv.	1050	1226			115

(Example) Product weight of FCD-D-32-20
- ● Product weight when S = 0 mm.....215 g
- ● Additional weight when S = 20 mm .....53g x $\frac{20}{10}$ = 106 g
- ● Product weight.....215 g + 106 g = 321 g

Theoretical thrust table

(Unit: N)

Bore size (mm)	Operating direction	Working pressure MPa							
		0.1	0.15	0.2	0.3	0.4	0.5	0.6	0.7
ø25	Push/Pull	37.9	56.9	75.9	1.14×10^2	1.52×10^2	1.90×10^2	2.28×10^2	2.66×10^2
ø32	Push/Pull	57.5	86.3	1.15×10^2	1.73×10^2	2.30×10^2	2.88×10^2	3.45×10^2	4.03×10^2
ø40	Push/Pull	1.09×10^2	1.63×10^2	2.18×10^2	3.27×10^2	4.36×10^2	5.45×10^2	6.54×10^2	7.63×10^2
ø50	Push/Pull	1.62×10^2	2.43×10^2	3.24×10^2	4.85×10^2	6.47×10^2	8.09×10^2	9.71×10^2	1.13×10^3
ø63	Push/Pull	2.86×10^2	4.30×10^2	5.73×10^2	8.59×10^2	1.15×10^3	1.43×10^3	1.72×10^3	2.00×10^3

SCP*3
CMK2
CMA2
SCM
SCG
SCA2
SCS2
CKV2
CAV2/COVP/N2
SSD2
SSG
SSD
CAT
MDC2
MVC
SMG
MSD/MSDG
FC*
STK
SRL3
SRG3
SRM3
SRT3
MRL2
MRG2
SM-25
ShkAbs
FJ
FK
Spd Contr
Ending

How to order

No switch (without magnet for switch)

FCD-D - 25 ◯ - 10 ——— N

With switch (built-in magnet for switch)

FCD-DL - 25 ◯ - 10 - M2V - R - N

Ⓐ Model No.

Ⓑ Bore size

Ⓒ Port thread

Ⓓ Stroke

Ⓔ Switch model No.
* indicates the lead wire length.

Ⓕ Switch quantity

Ⓖ Option
*2

Code	Description
Ⓐ Model No.	
FCD-D	Double acting/double rod
FCD-DL	Double acting/double rod/with switch

Ⓑ Bore size (mm)	
25	ø25
32	ø32
40	ø40
50	ø50
63	ø63

Ⓒ Port thread	
Blank	Rc thread
NN	NPT thread (ø40 or more) (made-to-order product)
GN	G thread (ø40 or more) (made-to-order product)

Ⓓ Stroke (mm)

Bore size	Stroke *1	Custom stroke
ø25 to ø63	**1 to 50**	**In 1 mm increments**

Ⓔ Switch model No.

Radial lead wire	Contact	Voltage AC	Voltage DC	Indicator	Lead wire
M2V*	Proximity		●	1-color LED	2-wire
M2WV*			●	2-color LED	
M3V*			●	1-color LED	3-wire
M3WV*			●	2-color LED	
M3PV*			●	1-color LED (made to order)	
M0V*	Reed	●	●	1-color LED	2-wire
M5V*		●	●	No indicator lamp	

*** Lead wire length**	
Blank	1 m (standard)
3	3 m (option)
5	5 m (option)

Ⓕ Switch quantity	
R	1 on rod side
H	1 on head side
D	2
T	3

Ⓖ Option	
Blank	Rod end female thread
M	Piston rod material (stainless steel)
N	Rod end male thread
R	With spigot
P6	Copper and PTFE free (copper-based/Teflon-based material is not used)

⚠ Precautions for model No. selection

*1 : Refer to page 1494 for the min. stroke with switch.
*2 : Dimensions of copper and PTFE free "P6" are the same as those of the standard.

[Example of model No.]

FCD-DL-25-10-M2V-R-M

Model: Flat compact cylinder

Ⓐ Model No. : Double acting/double rod/with switch
Ⓑ Bore size : ø25 mm
Ⓒ Port thread : Rc thread
Ⓓ Stroke : 10 mm
Ⓔ Switch model No. : Proximity switch M2V
Ⓕ Switch quantity : 1 on rod side
Ⓖ Option : Piston rod material (stainless steel)

How to order switch

● Switch body + mounting bracket set

FCS - M2V

Switch model No.
(Item Ⓔ on page 1496)

● Switch body only

SW - M2V

Switch model No.
(Item Ⓔ on page 1496)

● Mounting bracket set

FCS - M

Mounting bracket

SCP*3
CMK2
CMA2
SCM
SCG
SCA2
SCS2
CKV2
CAV2/ COVP/N2
SSD2
SSG
SSD
CAT
MDC2
MVC
SMG
MSD/ MSDG
FC*
STK
SRL3
SRG3
SRM3
SRT3
MRL2
MRG2
SM-25
ShkAbs
FJ
FK
Spd Contr
Ending

Internal structure and parts list

● FCD-DL (with switch)

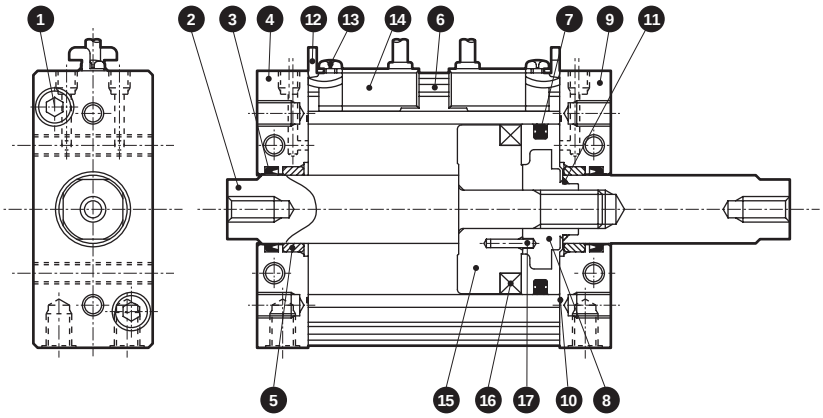

● FCD-D

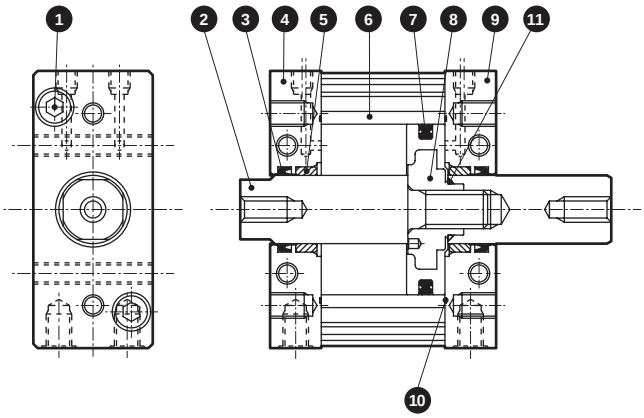

ø63

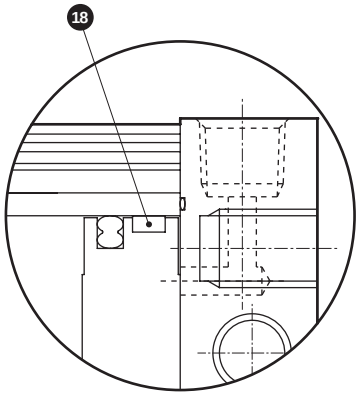

No.	Part name	Material	Remarks
1	Hexagon socket head cap screw	Steel	Zinc chromate
2	Piston rod	Steel	Industrial chrome plating
3	Rod packing	Nitrile rubber	
4	Rod cover	Aluminum alloy	Black alumite
5	Bush	Special bearing material	*1
6	Tube	Aluminum alloy	Hard alumite
7	Piston packing	Nitrile rubber	
8	Piston	Aluminum alloy + Acetal resin	ø25 to ø50
		Aluminum alloy	ø63: Chromate
9	Head cover	Aluminum alloy	Black alumite

No.	Part name	Material	Remarks
10	Cover gasket	Nitrile rubber	
11	Piston gasket	Nitrile rubber	
12	Switch mounting bracket	Stainless steel	
13	Cross-recessed pan head machine screw	Steel	Zinc chromate
14	Switch		
15	Spacer	Aluminum alloy	ø25 to ø50
		Polyamide resin	ø63
16	Magnet		
17	Spring pin	Steel	
18	Wear ring	Acetal resin	

*1: Special aluminum for copper and PTFE free.

Repair parts list (common to types with/without switch)

Bore size (mm)	Kit No.	Repair parts No.
ø25 or equiv.	FCD-D-25K	3 7 10
ø32 or equiv.	FCD-D-32K	
ø40 or equiv.	FCD-D-40K	
ø50 or equiv.	FCD-D-50K	
ø63 or equiv.	FCD-D-63K	3 7 10 18

Dimensions

● FCD-DL (double acting double rod with switch)

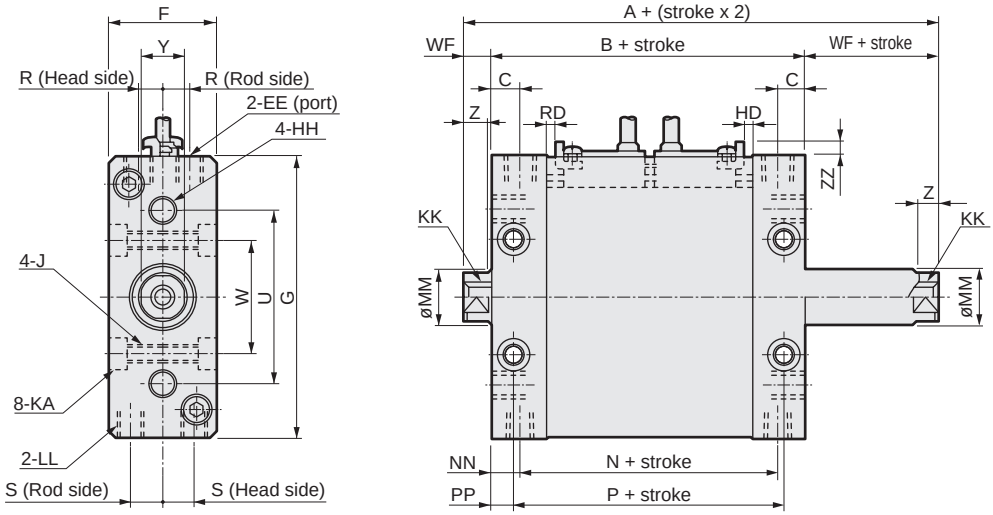

● Dimensions of rod end male thread (Option code: N)

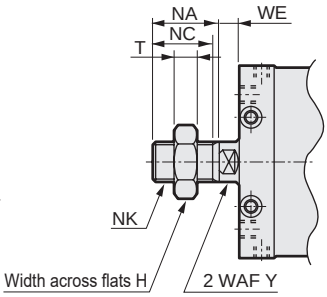

*1: This figure shows FCD-DL-40.
*2: For same-surface installation with 2 switches, the stroke of 35 mm and over for ø25 to ø50 equivalent or 30 mm and over for ø63 equivalent is required. For the stroke of that value or less, set on both sides.
*3: Position for Y section 2 WAF is unspecified.

● FCD-D (without switch)

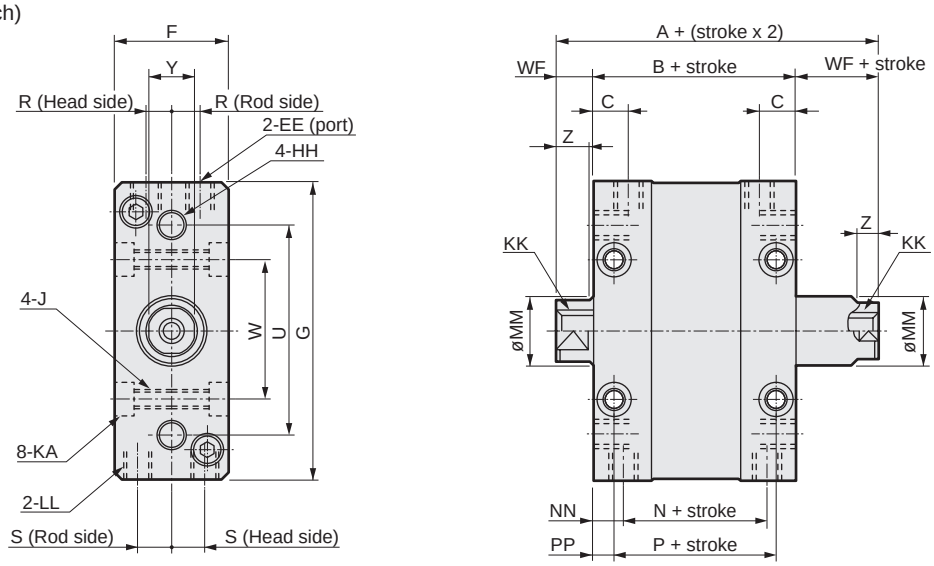

*1: This figure shows FCD-D-40.
*2: Position for Y section 2 WAF is unspecified.

Code / Bore size (mm)	Dimensions without switch				Dimensions with switch				Common dimensions						
	A	B	N	P	A	B	N	P	C	EE	F	G	HH	J	KA
ø25 or equiv.	42	32	20	24	57	47	35	39	7.5	M5 depth 4	25	55	M5 depth 7	M5 (through)	-
ø32 or equiv.	47	33	21	25	62	48	36	40	7.5	M5 depth 4	28	65	M6 depth 8	M5 (through)	-
ø40 or equiv.	57	41	25	29	72	56	40	44	8.5	Rc1/8	32	83	M8 depth 10	M6 (through)	9.5 spot face depth 5.4
ø50 or equiv.	65	46	29	27	80	61	44	42	10.5	Rc1/8	39	101	M10 depth 12	M8 (through)	11 spot face depth 6.5
ø63 or equiv.	76	57	37	37	91	72	52	52	11.5	Rc1/4	49	125	M12 depth 15	M12 (through)	17.5 spot face depth 10.5

Code / Bore size (mm)	Common dimensions with switch														
	KK	LL	MM	NN	PP	R	S	U	W	WF	ZZ	RD	HD	Y	Z
ø25 or equiv.	M5 depth 9	M5 depth 7	12	6	4	4.7	7	38	24	5	5.5 or less	0	0	10	5
ø32 or equiv.	M6 depth 11	M6 depth 8	16	6	4	6.2	8	45	30	7	5.5 or less	0	0	14	7
ø40 or equiv.	M8 depth 13	M8 depth 10	16	8	6	7.5	9	52	34	8	5.5 or less	0	0	14	7
ø50 or equiv.	M8 depth 13	M10 depth 12	20	8.5	9.5	9	10	62	40	9.5	5.5 or less	0	0.5	17	8
ø63 or equiv.	M10 depth 15	M12 depth 18	20	10	10	10.5	14	86	54	9.5	5.5 or less	0	4.5	17	8

● Rod end male thread dimensions

Code / Bore size (mm)	H	NA	NC	NK	T	WE
ø25 or equiv.	17	22	20	M10x1.25	6	5
ø32 or equiv.	22	22	20	M14x1.5	8	7
ø40 or equiv.	22	22	20	M14x1.5	8	7
ø50 or equiv.	27	28	26	M18x1.5	11	8
ø63 or equiv.	27	28	26	M18x1.5	11	8

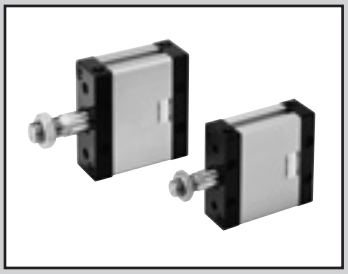

Flat compact cylinder double acting/cushioned

FCD-K Series

● Bore size: ø25/ø32/ø40/ø50/ø63

JIS symbol 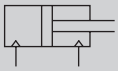

RoHS CAD

Specifications

Item	FCD-K FCD-KL				
Bore size mm	ø25 or equiv.	ø32 or equiv.	ø40 or equiv.	ø50 or equiv.	ø63 or equiv.
Actuation	Double acting/cushioned				
Working fluid	Compressed air				
Max. working pressure MPa	0.7 (≈100 psi, 7 bar)				
Min. working pressure MPa	0.07 (≈10 psi, 0.7 bar)				
Proof pressure MPa	1.05 (≈150 psi, 10.5 bar)				
Ambient temperature °C	-10 (14°F) to 60 (140°F) (no freezing)				
Port size	M5		Rc1/8		Rc1/4
Stroke tolerance mm	$^{+1.5}_{0}$ (to 50), $^{+2.0}_{0}$ (to 150)				
Working piston speed mm/s	50 to 500				
Cushion	Rubber cushion				
Lubrication	Not required (turbine oil class 1 ISO VG32 if necessary for lubrication)				
Allowable absorbed energy J	0.34	0.54	0.67	1.02	1.56

Rotation-stop precision/Allowable torque

Item	ø25 or equiv.	ø32 or equiv.	ø40 or equiv.	ø50 or equiv.	ø63 or equiv.
Non-rotating accuracy *2	±1°	±0.8°	±0.5°	±0.5°	±0.5°
Allowable torque N·m	1	1.6	2.5	3.9	5.9

*1: Avoid applying rotation torque with impact, or with violent changes in torque load direction.*2: "Non-rotating

Stroke

Model No.	Bore size (mm)	Standard stroke (mm)	Max. stroke (mm)	Min. stroke (mm)
FCD-K	ø25, ø32 ø40, ø50 ø63 or equiv.	5/10/15/20/25 30/40/50	150	1

*1: The custom stroke is available in 1mm increments.
*2: The min. stroke varies depending on switch mounting method. Refer to the following table.

Min. stroke with switch

1		2	
Rod side installation	Head side installation	Different surface mounting	Same surface mounting
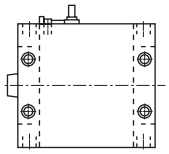	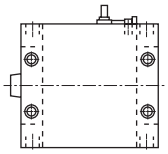	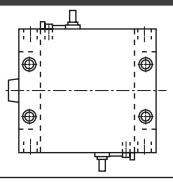	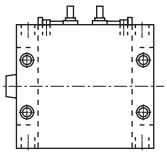
10 mm		15 mm	35 mm (ø25/32/40/50) 30 mm (ø63)

Switch specifications

● Proximity switch

Item	2-wire proximity		3-wire proximity		
	M2V	M2WV (2-color LED)	M3V	M3PV (Made to order)	M3WV (2-color LED)
Applications	Dedicated for programmable controller		Programmable controller, relay, IC circuit, small solenoid valve		
Output method	-	-	NPN output	PNP output	NPN output
Power supply voltage	-		4.5 to 28 VDC		10 to 28 VDC
Load voltage	10 to 30 VDC		30 VDC or less		
Load current	5 to 30 mA		100 mA or less	100 mA or less	100 mA or less
Indicator	LED (Lit when ON)	Red/green LED (Lit when ON)	LED (Lit when ON)	Yellow LED (Lit when ON)	Red/green LED (Lit when ON)
Leakage current	1 mA or less		10 μA or less	0.05 mA or less	10 μA or less
Weight g	1 m:22 3 m:57 5 m:93				

● Reed switch

Item	2-wire reed			
	M0V		M5V	
Applications	Programmable controller, relay		For programmable controller, relay, IC circuit (without indicator lamp), serial connection	
Power supply voltage	-		-	
Load voltage	12/24 VDC	110 VAC	5/12/24 VDC	110 VAC or less
Load current	5 to 50 mA	7 to 20 mA	50 mA or less	20 mA or less
Indicator	LED (Lit when ON)		No indicator lamp	
Leakage current	0 mA			
Weight g	1 m:22 3 m:57 5 m:93			

*1: Refer to Ending Page 1 for other switch specifications.
*2: Dimensions depend on switch model No. Refer to Ending Page 13 for details.

Cylinder weight

(Unit: g)

Item	Product weight when stroke (S) = 0 mm		Switch weight	Mounting bracket weight	Additional weight per S = 10 mm
	FCD-K				
Bore size (mm)	No switch	With switch			
ø25 or equiv.	155	221	Refer to the weight in the switch specifications.	2	26
ø32 or equiv.	225	316			37
ø40 or equiv.	355	481			46
ø50 or equiv.	550	741			71
ø63 or equiv.	1135	1196			90

(Example) Product weight of FCD-K-32-20
- ● Product weight when S = 0 mm.....225 g
- ● Additional weight when S = 20 mm .....37 g x $\frac{20}{10}$ = 74 g
- ● Product weight.....225 g + 74 g = 299 g

Theoretical thrust table

(Unit: N)

Bore size (mm)	Operating direction	Working pressure MPa							
		0.1	0.15	0.2	0.3	0.4	0.5	0.6	0.7
ø25	Push	49.3	73.9	98.5	1.48×10^2	1.97×10^2	2.46×10^2	2.96×10^2	3.45×10^2
	Pull	37.9	56.9	75.9	1.14×10^2	1.52×10^2	1.90×10^2	2.28×10^2	2.66×10^2
ø32	Push	77.6	1.16×10^2	1.55×10^2	2.33×10^2	3.10×10^2	3.88×10^2	4.66×10^2	5.43×10^2
	Pull	57.5	86.3	1.15×10^2	1.73×10^2	2.30×10^2	2.88×10^2	3.45×10^2	4.03×10^2
ø40	Push	1.29×10^2	1.94×10^2	2.58×10^2	3.87×10^2	5.16×10^2	6.45×10^2	7.75×10^2	9.04×10^2
	Pull	1.09×10^2	1.63×10^2	2.18×10^2	3.27×10^2	4.36×10^2	5.45×10^2	6.54×10^2	7.63×10^2
ø50	Push	1.93×10^2	2.90×10^2	3.86×10^2	5.80×10^2	7.73×10^2	9.66×10^2	1.16×10^3	1.35×10^3
	Pull	1.62×10^2	2.43×10^2	3.24×10^2	4.85×10^2	6.47×10^2	8.09×10^2	9.71×10^2	1.13×10^3
ø63	Push	3.18×10^2	4.77×10^2	6.36×10^2	9.53×10^2	1.27×10^3	1.59×10^3	1.91×10^3	2.22×10^3
	Pull	2.86×10^2	4.30×10^2	5.73×10^2	8.59×10^2	1.15×10^3	1.43×10^3	1.72×10^3	2.00×10^3

SCP*3
CMK2
CMA2
SCM
SCG
SCA2
SCS2
CKV2
CAV2/COVP/N2
SSD2
SSG
SSD
CAT
MDC2
MVC
SMG
MSD/MSDG
FC*
STK
SRL3
SRG3
SRM3
SRT3
MRL2
MRG2
SM-25
ShkAbs
FJ
FK
Spd Contr
Ending

How to order

No switch (without magnet for switch)

FCD-K - 25 ◯ - 10 ——— N

With switch (built-in magnet for switch)

FCD-KL - 25 ◯ - 10 - M2V - R - N

Ⓐ Model No.
Ⓑ Bore size
Ⓒ Port thread
Ⓓ Stroke
Ⓔ Switch model No.
* indicates the lead wire length.
Ⓕ Switch quantity
Ⓖ Option *2

Code	Description
Ⓐ Model No.	
FCD-K	Double acting/cushioned
FCD-KL	Double acting/cushioned/with switch

Ⓑ Bore size (mm)	
25	ø25
32	ø32
40	ø40
50	ø50
63	ø63

Ⓒ Port thread	
Blank	Rc thread
NN	NPT thread (ø40 or more) (made-to-order product)
GN	G thread (ø40 or more) (made-to-order product)

Ⓓ Stroke (mm)

Bore size	Stroke *1	Custom stroke
ø25 to ø63	**1 to 150**	**In 1 mm increments**

Ⓔ Switch model No.

Radial lead wire	Contact	Voltage AC	Voltage DC	Indicator	Lead wire
M2V*	Proximity		●	1-color LED	2-wire
M2WV*			●	2-color LED	
M3V*			●	1-color LED	3-wire
M3WV*			●	2-color LED	
M3PV*			●	1-color LED (made to order)	
M0V*	Reed	●	●	1-color LED	2-wire
M5V*		●	●	No indicator lamp	

*** Lead wire length**	
Blank	1 m (standard)
3	3 m (option)
5	5 m (option)

Ⓕ Switch quantity	
R	1 on rod side
H	1 on head side
D	2
T	3

Ⓖ Option	
Blank	Rod end female thread
M	Piston rod material (stainless steel)
N	Rod end male thread
R	With spigot
P6	Copper and PTFE free (copper-based/Teflon-based material is not used)

⚠ Precautions for model No. selection

*1 : Refer to page 1500 for the min. stroke with switch.
*2 : Dimensions of copper and PTFE free "P6" are the same as those of the standard.

[Example of model No.]

FCD-KL-25-10-M2V-R-M

Model: Flat compact cylinder

Ⓐ Model No. : Double acting/cushioned/with switch
Ⓑ Bore size : ø25 mm
Ⓒ Port thread : Rc thread
Ⓓ Stroke : 10 mm
Ⓔ Switch model No. : Proximity switch M2V
Ⓕ Switch quantity : 1 on rod side
Ⓖ Option : Piston rod material (stainless steel)

How to order switch

● Switch body + mounting bracket set

FCS - M2V

Switch model No.
(Item Ⓔ on page 1502)

● Switch body only

SW - M2V

Switch model No.
(Item Ⓔ on page 1502)

● Mounting bracket set

FCS - M

Mounting bracket

SCP*3
CMK2
CMA2
SCM
SCG
SCA2
SCS2
CKV2
CAV2/COVP/N2
SSD2
SSG
SSD
CAT
MDC2
MVC
SMG
MSD/MSDG
FC*
STK
SRL3
SRG3
SRM3
SRT3
MRL2
MRG2
SM-25
ShkAbs
FJ
FK
Spd Contr
Ending

Internal structure and parts list

● FCD-KL (with switch)

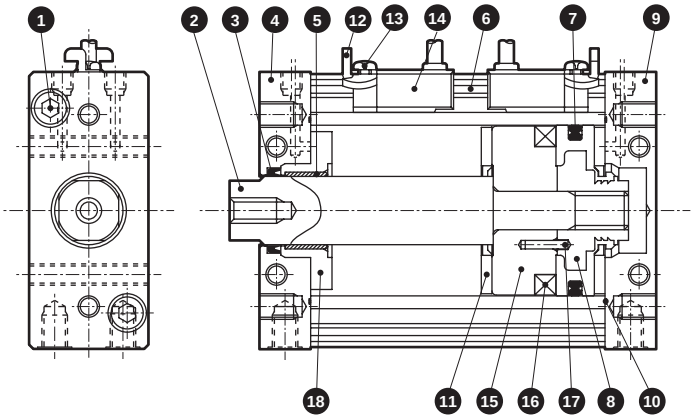

● FCD-K

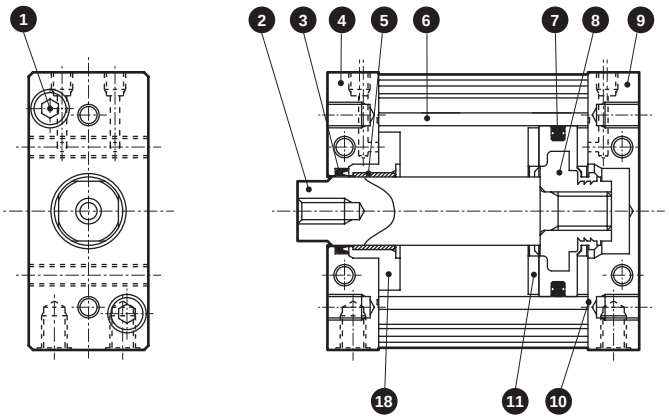

ø63

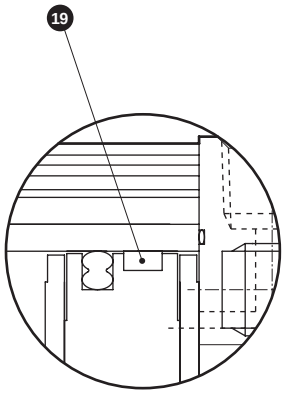

No.	Part name	Material	Remarks	No.	Part name	Material	Remarks
1	Hexagon socket head cap screw	Steel	Zinc chromate	10	Cover gasket	Nitrile rubber	
2	Piston rod	Steel	Industrial chrome plating	11	Cushion rubber	Urethane rubber	
3	Rod packing	Nitrile rubber		12	Switch mounting bracket	Stainless steel	
4	Rod cover	Aluminum alloy	Black alumite	13	Cross-recessed pan head machine screw	Steel	Zinc chromate
5	Bush	Special bearing material	*1	14	Switch		
6	Tube	Aluminum alloy	Hard alumite	15	Spacer	Aluminum alloy	ø25 to ø50
7	Piston packing	Nitrile rubber				Polyamide resin	ø63
8	Piston	Aluminum alloy + Acetal resin	ø25 to ø50	16	Magnet		
				17	Spring pin	Steel	
		Aluminum alloy	ø63: Chromate	18	Bush spacer	Aluminum alloy	ø63: Chromate
9	Head cover	Aluminum alloy	Black alumite	19	Wear ring	Acetal resin	

*1: Special aluminum for copper and PTFE free.

Repair parts list (common to types with/without switch)

Bore size (mm)	Kit No.	Repair parts No.
ø25 or equiv.	FCD-K-25K	3 7 10 11
ø32 or equiv.	FCD-K-32K	
ø40 or equiv.	FCD-K-40K	
ø50 or equiv.	FCD-K-50K	
ø63 or equiv.	FCD-K-63K	3 7 10 11 19

Dimensions

● FCD-KL (double acting cushioned, with switch)

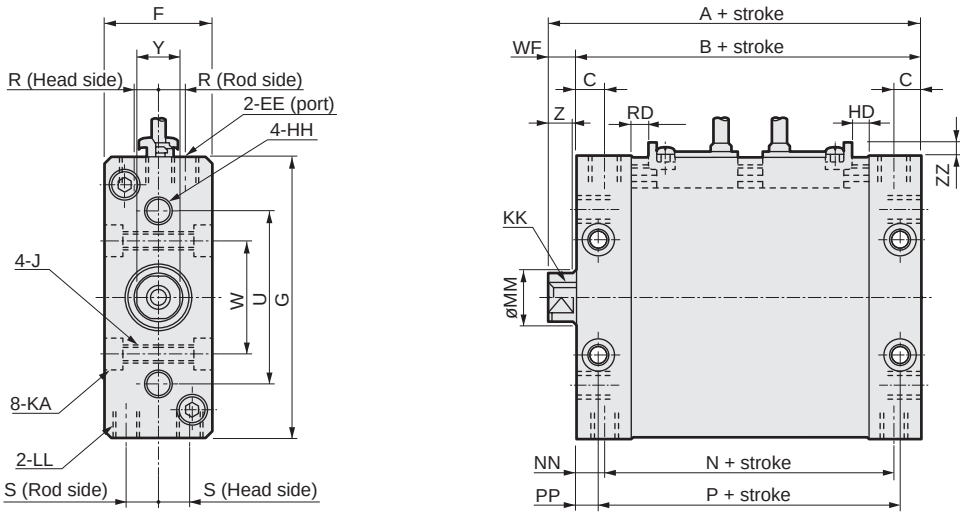

● Dimensions of rod end male thread (Option code: N)

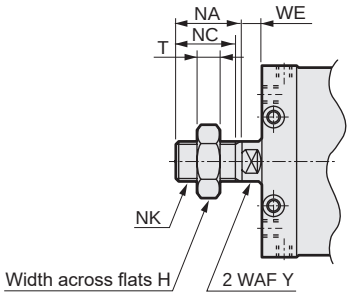

*1: This figure shows FCD-KL-40.
*2: For same-surface installation with 2 switches, the stroke of 35 mm and over for ø25 to ø50 equivalent or 30 mm and over for ø63 equivalent is required. For the stroke of that value or less, set on both sides.
*3: Position for Y section 2 WAF is unspecified.

● FCD-K (without switch)

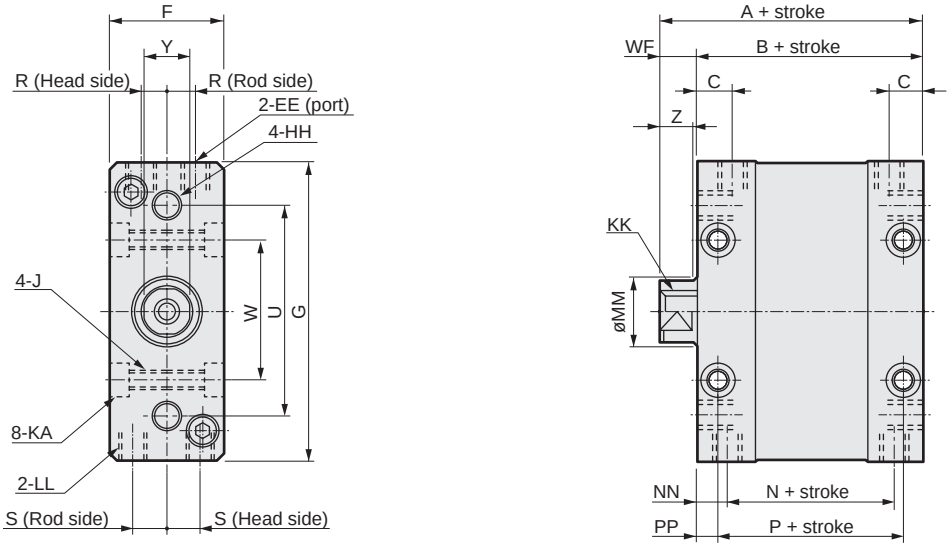

*1: This figure shows FCD-K-32.
*2: Position for Y section 2 WAF is unspecified.

Code	Dimensions without switch				Dimensions with switch				Common dimensions						
Bore size (mm)	A	B	N	P	A	B	N	P	C	EE	F	G	HH	J	KA
ø25 or equiv.	47	42	30	34	62	57	45	49	7.5	M5 depth 4	25	55	M5 depth 7	M5 (through)	-
ø32 or equiv.	50	43	31	35	65	58	46	50	7.5	M5 depth 4	28	65	M6 depth 8	M5 (through)	-
ø40 or equiv.	59	51	35	39	74	66	50	54	8.5	Rc1/8	32	83	M8 depth 10	M6 (through)	9.5 spot face depth 5.4
ø50 or equiv.	65.5	56	39	37	80.5	71	54	52	10.5	Rc1/8	39	101	M10 depth 12	M8 (through)	11 spot face depth 6.5
ø63 or equiv.	76.5	67	47	47	91.5	82	62	62	11.5	Rc1/4	49	125	M12 depth 15	M12 (through)	17.5 spot face depth 10.5

Code	Common dimensions with switch														
Bore size (mm)	KK	LL	MM	NN	PP	R	S	U	W	WF	ZZ	RD	HD	Y	Z
ø25 or equiv.	M5 depth 9	M5 depth 7	12	6	4	4.7	7	38	24	5	5.5 or less	6	1	10	5
ø32 or equiv.	M6 depth 11	M6 depth 8	16	6	4	6.2	8	45	30	7	5.5 or less	7	1	14	7
ø40 or equiv.	M8 depth 13	M8 depth 10	16	8	6	7.5	9	52	34	8	5.5 or less	7	2	14	7
ø50 or equiv.	M8 depth 13	M10 depth 12	20	8.5	9.5	9	10	62	40	9.5	5.5 or less	7	3	17	8
ø63 or equiv.	M10 depth 15	M12 depth 18	20	10	10	10.5	14	86	54	9.5	5.5 or less	7	7	17	8

● Rod end male thread dimensions

Code / Bore size (mm)	H	NA	NC	NK	T	WE
ø25 or equiv.	17	22	20	M10x1.25	6	5
ø32 or equiv.	22	22	20	M14x1.5	8	7
ø40 or equiv.	22	22	20	M14x1.5	8	7
ø50 or equiv.	27	28	26	M18x1.5	11	8
ø63 or equiv.	27	28	26	M18x1.5	11	8

SCP*3
CMK2
CMA2
SCM
SCG
SCA2
SCS2
CKV2
CAV2/COVP/N2
SSD2
SSG
SSD
CAT
MDC2
MVC
SMG
MSD/MSDG
FC*
STK
SRL3
SRG3
SRM3
SRT3
MRL2
MRG2
SM-25
ShkAbs
FJ
FK
Spd Contr
Ending

FC Series common dimensions: Option (with spigot)

● Dimensions with spigot (option code R)

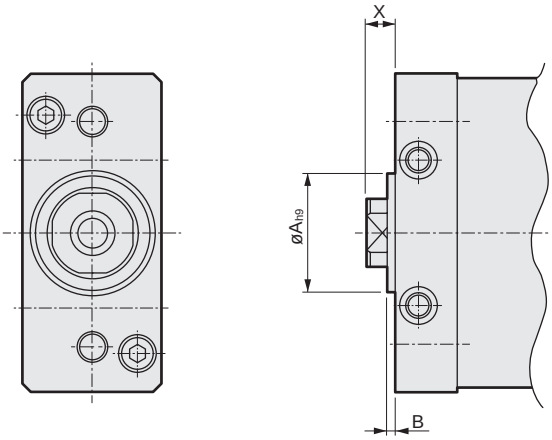

Code / Bore size (mm)	A	B	X
ø25 or equiv.	20	$2^{0}_{-0.4}$	5
ø32 or equiv.	24	$2^{0}_{-0.4}$	7
ø40 or equiv.	28	$2^{0}_{-0.4}$	8
ø50 or equiv.	32	$2^{0}_{-0.4}$	9.5
ø63 or equiv.	32	$2^{0}_{-0.4}$	9.5