CATALOGUE

CAMOZZI
Automation

PNEUMATIC ACTUATION

WELCOME TO CAMOZZI AUTOMATION

Camozzi Automation is a global leader in the design and production of motion and fluid control components, systems and technologies for Industrial automation, Transportation and Life science industries.

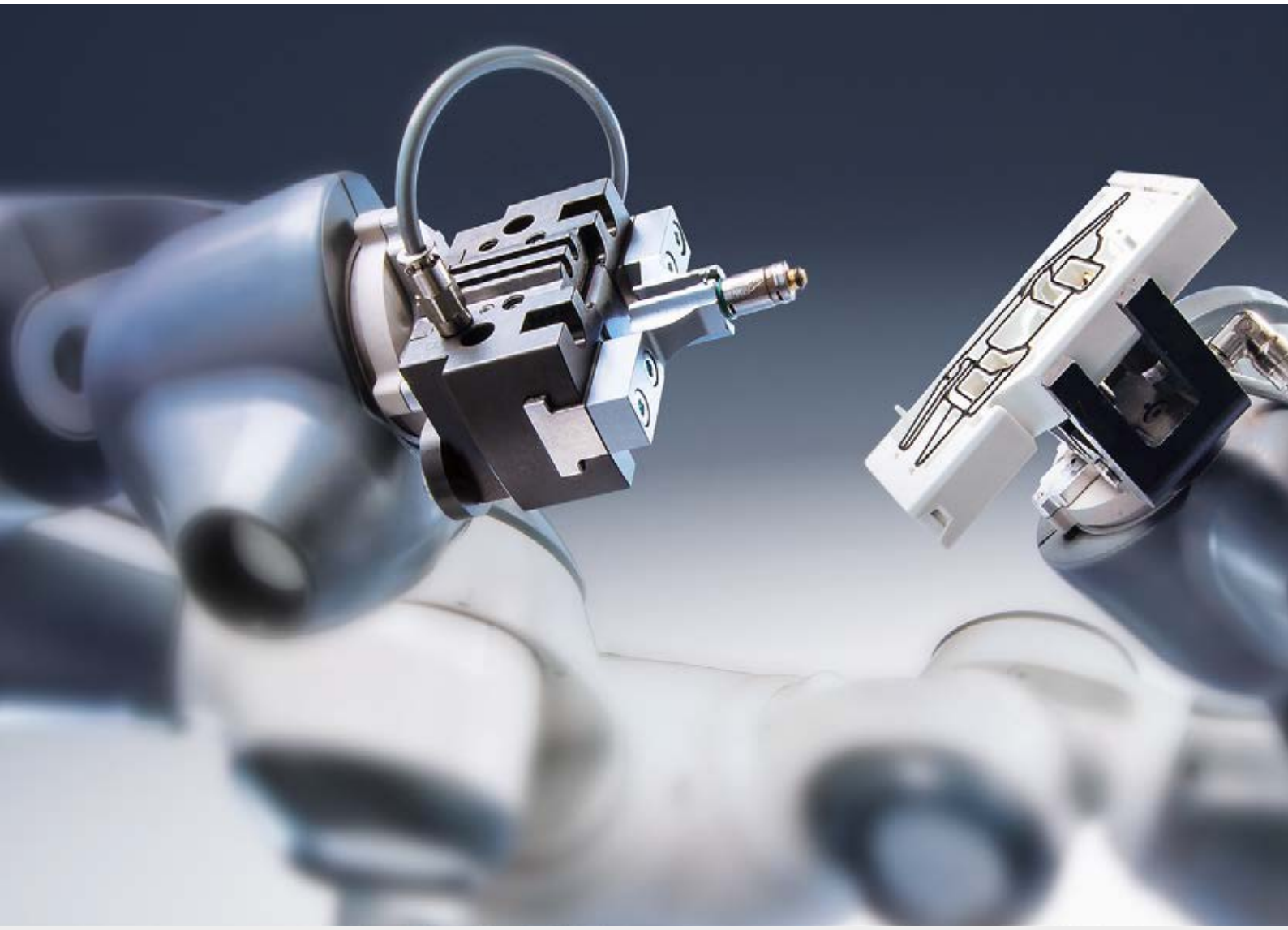

Contacts

Camozzi Automation S.p.A.
Società Unipersonale
Via Eritrea, 20/I
25126 Brescia
Italy
Tel. +39 030 37921
www.camozzi.com

Customer Service
Tel. +39 030 3792790
service@camozzi.com

Export Department
Tel. +39 030 3792253
sales@camozzi.com

CAMOZZI
Automation

Our catalogues

1 Pneumatic actuation

1 International standard cylinders
2 Compact cylinders
3 Stainless steel cylinders
4 Guided cylinders
5 Cylinders not according standards
6 Rotary cylinders
7 Rodless cylinders
8 Proximity switches
9 Hydrochecks, Rod lock, Shock absorbers

2 Electric actuation

1 Electromechanical cylinders
2 Electromechanical axes
3 Drives
4 Motors and gearboxes

3 Handling

1 Grippers

4 Vacuum components

1 Suction pads
2 Ejectors
3 Vacuum accessories
4 Vacuum filters

5 Valves and solenoid valves

1 Direct and indirect acting 2/2, 3/2 solenoid valves
2 Solenoid, pneumatic and manifold valves
3 Mechanical and manual valves
4 Logic valves
5 Automatic valves
6 Flow control valves
7 Silencers

6 Fieldbus and multipole systems

1 Valve islands
2 Multi-serial modules

7 Proportional technology

1 Proportional valves
2 Proportional regulators

8 Air treatment

1 Series MX Modular FRL Units
2 Series MC Modular FRL Units
3 Series MD Modular FRL Units
4 Series N FRL Units
5 Pressure regulators
6 Pressure switches and vacuum switches
7 Accessories for air treatment

9 Fittings, connectors, tubing and accessories

1 Super-rapid fittings
2 Rapid fittings
3 Universal fittings
4 Fittings accessories
5 Quick-release couplings
6 Tubing, spirals and accessories
7 Fittings and accessories for applications of medical gases
8 Mini ball valves

General index

1 International standard cylinders

2 Compact cylinders

3 Stainless steel cylinders

4 Guided cylinders

5 Cylinders not according standards

6 Rotary cylinders

7 Rodless cylinders

8 Proximity switches

9 Hydrochecks, Rod lock, Shock absorbers

Series 16, 23, 24 and 25 mini-cylinders

Series 16: ø 8, 10, 12 mm - non-magnetic
Series 23: ø 16, 20, 25 mm - magnetic, auto-cushioned
Series 24: ø 16, 20, 25 mm - magnetic
Series 25: ø 16, 20, 25 mm - magnetic, cushioned

- Single and double-acting
- In compliance with ISO 6432
- Stainless steel rod and barrel
- Anodized aluminium end-blocks
- Cushioning types: mechanical with bumper, pneumatic auto-cushioning, adjustable pneumatic cushioning

Series 16, 23, 24 and 25 mini-cylinders are designed according to ISO 6432.
It is possible to choose from three different types of cushioning: mechanical (standard bumper on Series 16 and 24), adjustable pneumatic cushioning (Series 25) and pneumatic auto-cushioning (Series 23). This last version, thanks to a patented system, automatically adjusts the cushioning in order to provide optimal deceleration during the entire cushioning phase. The cylinder enjoys smooth, jolt-free movement, reducing vibrations and noise, while also guaranteeing high reliability and constant performance over time.

The adopted technical solutions and the choice of materials have provided the basis for a complete range of versatile and very reliable mini-cylinders. They are suitable to be used in a multitude of industrial applications, especially where operating conditions undergo changes over time like for example wear of machine components. Various mounting accessories are available to fix the cylinders in different ways.

GENERAL DATA

Type of construction	crimped
Operation	single-acting and double-acting
Design	ISO 6432
Materials	anodized aluminium end-caps - stainless steel barrel and rod, aluminium piston - NBR/PU seals, other parts: see the coding example
Brackets	rod end - flange - feet - trunnion
Stroke min - max	Series 16 ø 8 ÷ ø 10: 10 - 250 mm - Series 16: ø 12: 10 - 300 mm - Series 23, 24 and 25 ø 16: 10 - 600 mm; ø 20 - ø 25: 10 - 1000 mm
Bores	Series 16: ø 8, 10, 12 - Series 23, 24 and 25: ø 16, 20, 25
Operating temperature	0°C ÷ 80°C (with dry air -20°C)
Operating pressure	1 ÷ 10 bar (double-acting); 2 ÷ 10 bar (single-acting)
Fluid	filtered ait in class 7.8.4 according to ISO 8573-1. If lubricated air is used, it is recommended to use oil ISO VG32. Once applied the lubrication should never be interrupted.
Speed	10 ÷ 1000 mm/sec (without load)

STANDARD STROKES FOR MINICYLINDERS

■ = Double-acting
✖ = Single-acting

STANDARD STROKES															
Series	Ø	10	25	40	50	80	100	125	160	200	250	300	320	400	500
16	8	■✖	■✖	■✖	■✖	■	■	■	■	■					
16	10	■✖	■✖	■✖	■✖	■	■	■	■	■					
16	12	■✖	■✖	■✖	■✖	■	■	■	■	■	■	■			
24	16	■✖	■✖	■✖	■✖	■	■	■	■	■	■	■	■	■	■
24	20	■✖	■✖	■✖	■✖	■	■	■	■	■	■	■	■	■	■
24	25	■✖	■✖	■✖	■✖	■	■	■	■	■	■	■	■	■	■
23/25	16	■	■	■	■	■	■	■	■	■	■	■	■	■	■
23/25	20	■	■	■	■	■	■	■	■	■	■	■	■	■	■
23/25	25	■	■	■	■	■	■	■	■	■	■	■	■	■	■

CODING EXAMPLE

24	N	2	A	16	A	100	

24	SERIES 16 = non magnetic, with mechanical cushioning 23 = magnetic, auto-cushioning 24 = magnetic, with mechanical cushioning 25 = magnetic, adjustable cushioning	
N	VERSION N = standard	
2	OPERATION 1 = single-acting, front spring, no cushion (only for series 16, 24) 2 = double-acting 3 = double-acting, through-rod 7 = single-acting, through-rod (only for series 16, 24)	PNEUMATIC SYMBOLS CS02 (s. 16) - CS06 (s. 24) CD01 (s. 16) - CD08 (s. 24) - CD23 (s.23) - CD09 (s. 25) CD05 (s. 16) - CD12 (s. 24) - CD24 (s.23) - CD13 (s. 25) CS04 (s. 16) - CS10 (s. 24)
A	MATERIALS A = rolled stainless steel AISI 303 rod, stainless steel AISI 304 tube, anodized AL end-blocks	
16	BORE 08 = 8 mm (only for series 16) 10 = 10 mm (only for series 16) 12 = 12 mm (only for series 16) 16 = 16 mm (only for series 23, 24 e 25) 20 = 20 mm (only for series 23, 24 e 25) 25 = 25 mm (only for series 23, 24 e 25)	
A	CONSTRUCTION A = Nose nut Mod. V + Piston rod lock nut Mod. U RL = cylinder with rod lock (only for Ø20 - Ø25)	
100	STROKE (see graph)	
	= standard V = rod seal in FKM W = all seals in FKM, +130°C (for series 25 only) (_ _ _) = extended rod _ _ _mm	

PNEUMATIC SYMBOLS

The pneumatic symbols which have been indicated in the CODING EXAMPLE are shown below.

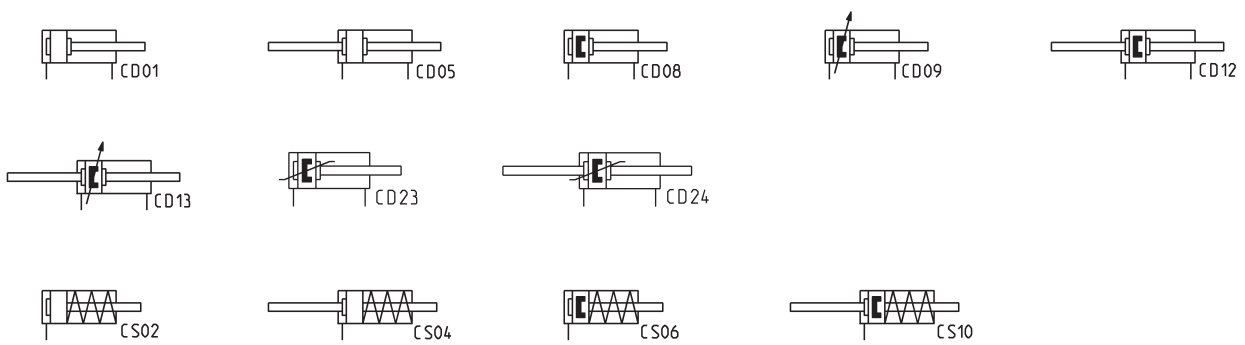

ACCESSORIES FOR MINICYLINDERS SERIES 16 - 23 - 24 - 25


Foot mount Mod. B


Front/rear flange mount Mod. E


Rear trunnion bracket Mod. I

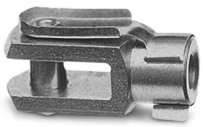
Rod fork end Mod. G


Swivel ball joint Mod. GA


Piston rod socket joint Mod. GY


Piston rod lock nut Mod. U


Nose nut Mod. V


Self aligning rod Mod. GK


Coupling piece Mod. GKF

All accessories are supplied separately, except for piston rod lock nut Mod. U and nose nut Mod. V

SERIES 23: APPLICABLE MASS ACCORDING TO THE CYLINDER'S SPEED

CHOICE OF THE CYLINDER

1) Choose the right size according to the force needed in the application

2) Check on the graph if the working conditions, mass and speed intersect
at a point below the curve that corresponds to the size chosen

m = mass applied to the cylinder
v = speed applied to the cylinder (m/s)

Example:
Diameter = 20 mm; Max speed = 0,4 m/s; Applicable mass = 6kg;

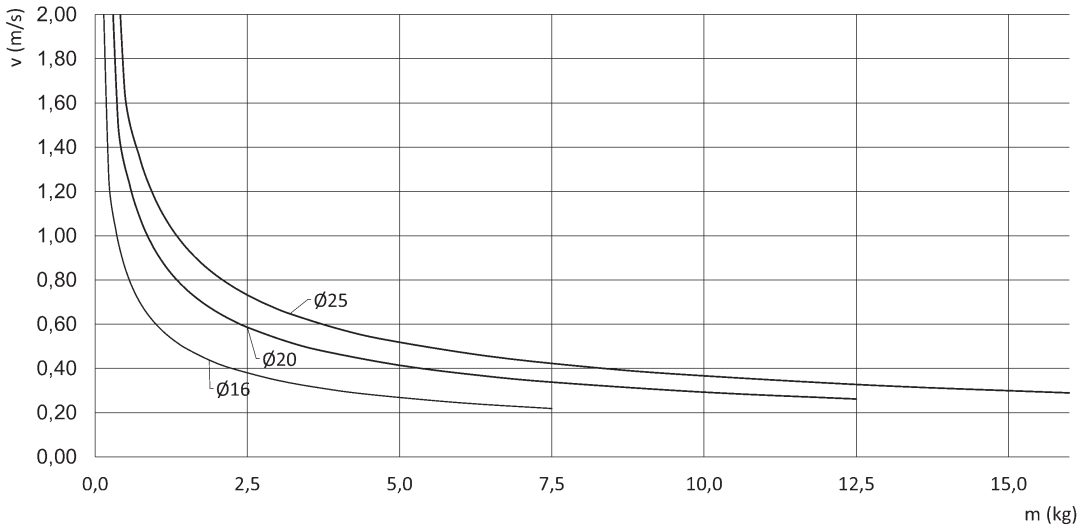

Series 16, 23, 24 and 25 mini-cylinders

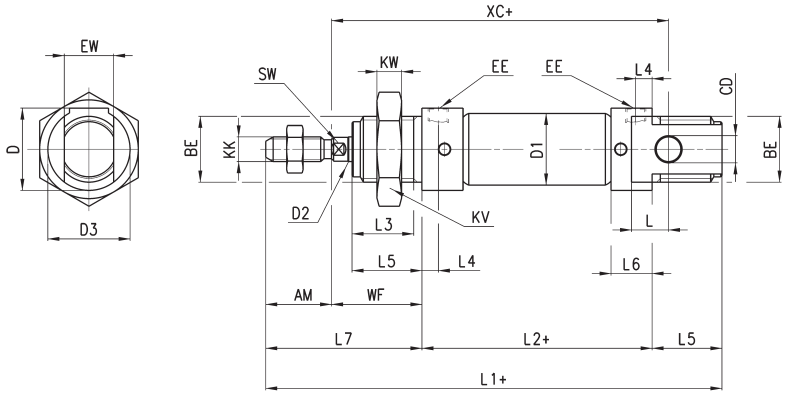

+ = add the stroke

DIMENSIONS																							
Series	Ø	EW	KW	BE	KK	CD	øD1	EE	øD2	L1+	XC+	L2+	AM	L3	L4	L5	L	WF	L6	L7	KV	SW	D	D3	front/rear cushion stroke
16	8	8	7	M12x1,25	M4x0,7	4	9,3	M5	4	86	64	46	12	10	4,5	12	6	16	9	28	19	-	15	15	-
16	10	8	7	M12x1,25	M4x0,7	4	11,3	M5	4	86	64	46	12	10	4,5	12	6	16	9	28	19	-	15	15	-
16	12	12	8	M16x1,5	M6x1	6	13,3	M5	6	105	75	50	16	15	4,5	17	9	22	9	38	24	5	20,5	20	-
23	16	12	8	M16x1,5	M6x1	6	17,3	M5	6	111	82	56	16	15	5,5	17	9	22	12	38	24	5	20,5	20	10
24-25	16	12	8	M16x1,5	M6x1	6	17,3	M5	6	111	82	56	16	15	5,5	17	9	22	10	38	24	5	20,5	20	10
23-24-25	20	16	10	M22x1,5	M8x1,25	8	21,3	G1/8	8	132	95	68	20	18	8	20	12	24	16	44	32	7	27	27	15
23-24-25	25	16	10	M22x1,5	M10x1,25	8	26,5	G1/8	10	141,5	104	69,5	22	20	8	22	12	28	16	50	32	9	27	27	16

Series 16, 23, 24 and 25 mini-cylinders with through-rod

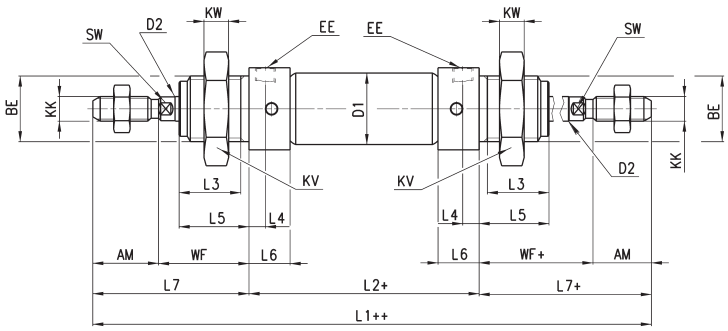

+ = add the stroke once
++ = add the stroke twice

DIMENSIONS																			
Series	Ø	KW	BE	KK	øD1	EE	øD2	L1++	L2+	AM	L3	L4	L5	WF+	L6	L7+	KV	SW	front/rear cushion stroke
16	8	7	M12x1,25	M4x0,7	9,3	M5	4	102	46	12	10	4,5	12	16	9	28	19	-	-
16	10	7	M12x1,25	M4x0,7	11,3	M5	4	102	46	12	10	4,5	12	16	9	28	19	-	-
16	12	8	M16x1,5	M6x1	13,3	M5	6	126	50	16	15	4,5	17	22	9	38	24	5	-
23	16	8	M16x1,5	M6x1	17,3	M5	6	132	56	16	15	5,5	17	22	12	38	24	5	10
24-25	16	8	M16x1,5	M6x1	17,3	M5	6	132	56	16	15	5,5	17	22	10	38	24	5	10
23-24-25	20	10	M22x1,5	M8x1,25	21,3	G1\8	8	156	68	20	18	8	20	24	16	44	32	7	15
23-24-25	25	10	M22x1,5	M10x1,25	26,5	G1\8	10	169,5	69,5	22	20	8	22	28	16	50	32	9	16

Series 23 - 24 - 25 mini-cylinders with rod lock (Mod. RLC)

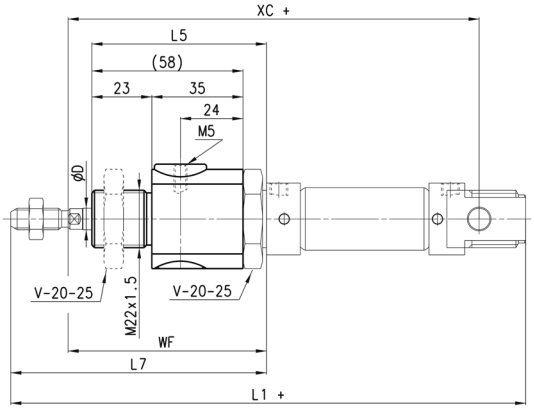

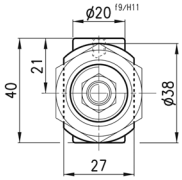

+ = add the stroke

DIMENSIONS								
Series	Ø	G7D	WF	L5	L7	XC+	L1+	F (N)
23-24-25	20	8	74	70	94	145	182	300
23-24-25	25	10	76	70	98	152	189,5	400

Foot mount Mod. B

Feet and nose nut material: zinc-plated steel.

Supplied with:
2x feet
1x nose nut mod. V

+ = add the stroke

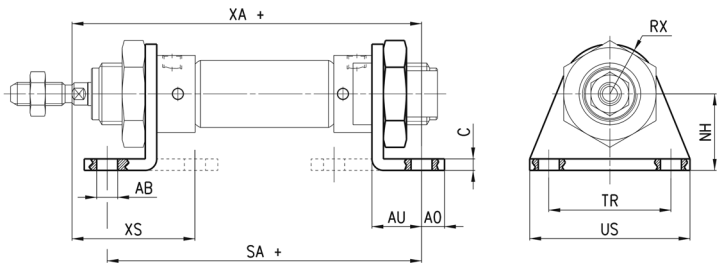

DIMENSIONS												
Mod.	Ø	ØAB	XS	XA+	SA+	AO	AU	C	RX	TR	US	NH
B-8-10	8-10	4,5	24	72,5	67	4,5	10,5	2,5	10	25	35	16
B-12-16	12	5,5	32	82,5	76	6	13	3	13	32	42	20
B-12-16	16	5,5	32	91	82	6	13	3	13	32	42	20
B-20-25	20	6,6	36	108	100	8	16	4	20	40	54	25
B-20-25	25	6,6	40	113,5	101,5	8	16	4	20	40	54	25

Front/rear flange mount Mod. E

Material: zinc-plated steel.

+ = add the stroke

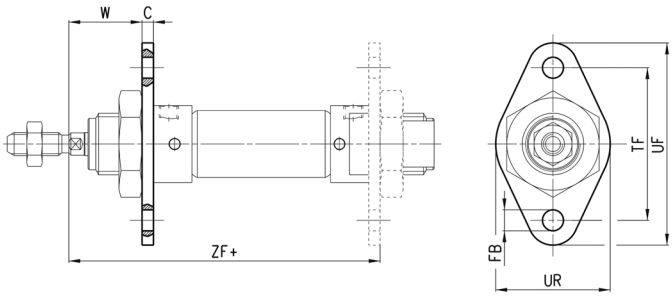

DIMENSIONS								
Mod.	Ø	W	C	ZF+	FB	UF	TF	UR
E-8-10	8-10	13,5	2,5	64,5	4,5	40	30	25
E-12-16	12	19	3	75	5,5	53	40	30
E-12-16	16	19	3	81	5,5	53	40	30
E-20-25	20	20	4	96	6,6	66	50	40
E-20-25	25	24	4	101,5	6,6	66	50	40

Rear trunnion bracket Mod. I

Supplied with:
1x zinc-plated steel rear trunnion
1x stainless steel clevis pin
2x steel Seeger

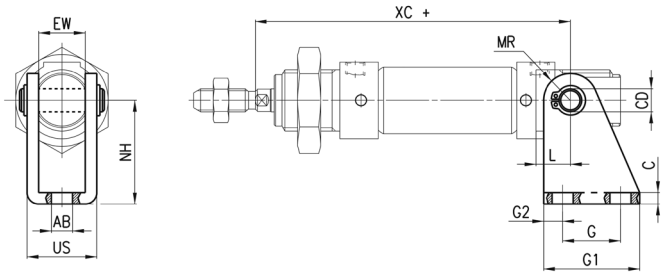

+ = add the stroke

DIMENSIONS													
Mod.	Ø	EW	ØAB	US	NH	XC+	MR	L	G2	G	G1	CD	C
I-8-10	8-10	8	4,5	13,1	24	64	5	6	3,5	12,5	20	4	2,5
I-12-16	12	12	5,5	18,1	27	75	7	9	5	15	25	6	3
I-12-16	16	12	5,5	18,1	27	82	7	9	5	15	25	6	3
I-20-25	20	16	6,6	24,1	30	95	10	12	6	20	32	8	4
I-20-25	25	16	6,6	24,1	30	104	10	12	6	20	32	8	4

Rod fork end Mod. G

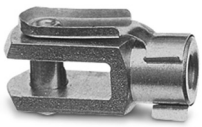

ISO 8140
Material: zinc-plated steel.

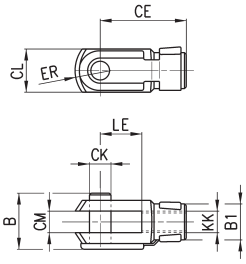

DIMENSIONS										
Mod.	Ø	CL	ER	CE	B	CM	ØCK	LE	KK	ØB1
G-8-10	8-10	8	5	16	11	4	4	8	M4x0,7	8
G-12-16	12-16	12	7	24	16	6	6	12	M6x1	10
G-20	20	16	10	32	22	8	8	16	M8x1,25	14
G-25-32	25	20	12	40	26	10	10	20	M10x1,25	18

Swivel ball joint Mod. GA

ISO 8139
Material: zinc-plated steel.

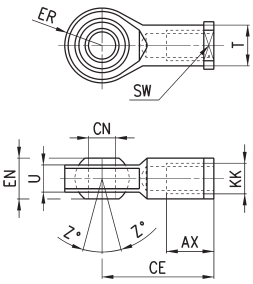

DIMENSIONS											
Mod.	Ø	$_{ø}CN^{(H7)}$	U	EN	ER	AX	CE	KK	ØT	Z	SW
GA-8-10	8-10	5	6	8	9	10	27	M4x0.7	9	6.5°	9
GA-12-16	12-16	6	7	9	10	12	30	M6X1	10	6.5°	11
GA-20	20	8	9	12	12	16	36	M8X1.25	12.5	6.5°	14
GA-32	25	10	10.5	14	14	20	43	M10X1.25	15	6.5°	17

Piston rod socket joint Mod. GY

ISO 8139
Material: zama and zinc-plated steel.

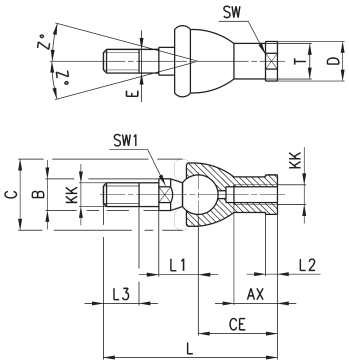

DIMENSIONS																
Mod.	Ø	Z	E	SW	øT	øD	øC	øB	KK	L3	SW1	L1	L	CE	AX	L2
GY-12-16	12-16	15	6	11	10	13	20	10	M6X1	11	8	12,2	55	28	15	5
GY-20	20	15	8	14	12,5	16	24	12	M8X1,25	12	10	16	65	32	16	5
GY-32	25	15	10	17	15	19	28	14	M10X1,25	15	11	19,5	74	35	18	6,5

Piston rod lock nut Mod. U

ISO 4035
Material: zinc-plated steel.

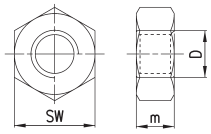

DIMENSIONS				
Mod.	Ø	SW	m	D
U-8-10	8-10	7	3	M4X0,7
U-12-16	12-16	10	4	M6X1
U-20	20	13	5	M8X1,25
U-25-32	25	17	6	M10X1,25

Nose nut Mod.V

ISO 4035
V-8-10 / V-20-25 not according standard.
Material: zinc-plated steel

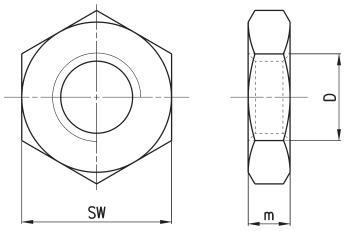

DIMENSIONS				
Mod.	Ø	D	m	SW
V-8-10	8-10	M12X1,25	7	19
V-12-16	12-16	M16X1,5	8	24
V-20-25	20-25	M22X1,5	10	32

Self aligning rod Mod. GK

Material: zinc-plated steel.

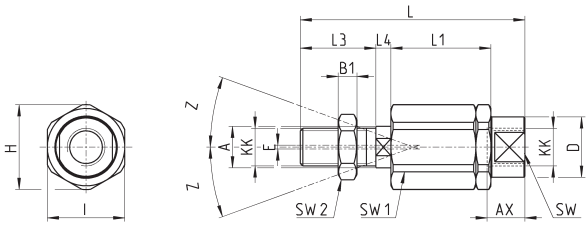

DIMENSIONS																	
Mod.	Ø	H	I	Z	øA	KK	E	L	L3	L4	L1	B1	SW2	SW1	AX	SW	øD
GK-12-16	12-16	14.5	13	3	6	M6x1	1	35	11	2.5	17.5	4	10	5	12.5	7	8.5
GK-20	20	19	17	4	8	M8x1,25	2	57	21	5	26	4	13	7	16	11	12.5
GK-25-32	25-32	32	30	4	14	M10x1,25	2	71.5	20	7.5	35	5	17	12	22	19	22

Coupling piece Mod. GKF

Material: zinc-plated steel.

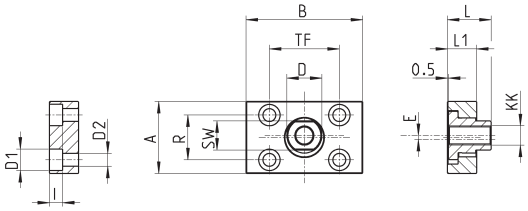

DIMENSIONS														
Mod.	Ø	Ø D1	I	Ø D2	A	R	SW	B	TF	Ø D	E	L	L1	KK
GKF-20	20	5,5	-	-	30	20	13	35	25	14	1,5	22,5	10	M8x1,25
GKF-25-32	25	11	6,8	6,6	37	23	15	60	36	18	2	22,5	15	M10x1,25

Series 40 cylinders

Double acting, cushioned, magnetic
Ø 160 - 200 - 250 - 320 mm

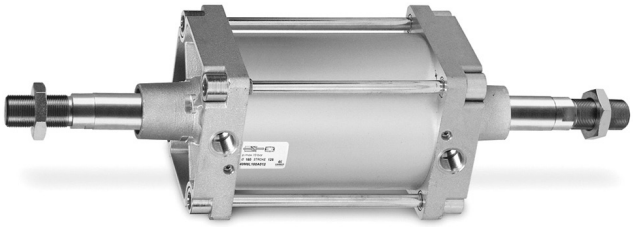

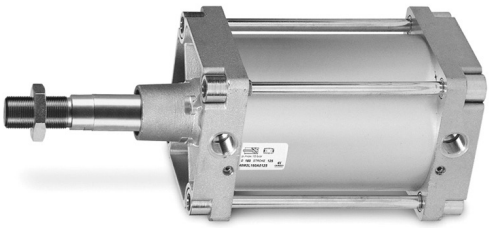

- In compliance with ISO 15552 standards and with the previous DIN/ISO 6431 - VDMA 24562 standards
- Adjustable pneumatic cushioning
- Rolled stainless steel rod (Ø 160 - 200 mm)
- Chrome plated steel rod (Ø 250 - 320 mm)
- Rod scraper in brass

Series 40 cylinders comply with the ISO 15552 standards and can be assembled with the entire range of standard accessories.
A permanent magnet on the piston of these cylinders is able to send, through proximity switches mounted on the cylinder sliding axis, electrical signals to indicate its position.

This series is normally equipped with end-stroke cushioning which can be adjusted through a screw on the end block.
In order to quieten the impact of the piston on the end block, these cylinders are also equipped with mechanical cushioning.

GENERAL DATA

Type of construction	with tie-rods
Operation	double-acting
Design	ISO 15552
Materials	Coated AL end blocks and piston (Ø250-320 mm), rolled stainless steel AISI 420B (Ø 160-200 mm) or chrome plated steel (Ø250-320 mm) piston rod, zinc-plated steel piston rod nut, anodized AL tube, zinc-plated steel tie-rods and tie-rod nuts, NBR-PU rod - piston and cushion seals brass rod scraper ring
Mounting	with tie-rods, front flange, rear flange, feet, centre trunnion, front and rear trunnion, swivel combination
Strokes min - max	10 ÷ 2500 mm
Operating temperature	0°C ÷ 80°C (with dry air -20°C)
Operating pressure	1 ÷ 10 bar
Speed	10 ÷ 500 mm/sec (without load)
Fluid	filtered air, without lubrication. If lubricated air is used, it is recommended to use oil ISOVG32. Once applied the lubrication should never be interrupted.

STANDARD STROKES FOR SERIES 40 CYLINDERS

■ = double-acting

Ø	25	50	75	80	100	125	150	160	200	250	300	320	400	500
160		■		■	■		■		■		■		■	■
200		■			■				■		■			
250		■			■				■		■			
320		■			■				■		■			

CODING EXAMPLE

40	M	2	L	160	A	0200	

40	SERIES	
M	VERSION M = standard, magnetic	
2	OPERATION 2 = double-acting, front and rear cushions 3 = double-acting, no cushion 4 = double-acting, rear cushions 5 = double-acting, front cushion 6 = double-acting, through-rod, front and rear cushions 8 = double-acting, through-rod, no cushion	PNEUMATIC SYMBOLS CD09 CD08 CD10 CD11 CD13 CD12
L	MATERIALS L = see the GENERAL DATA table on the previous page T = stainless steel AISI 420B tie-rods - stainless steel AISI 303 tie-rod nuts C = rolled stainless steel AISI 303 piston rod, stainless steel AISI 304 piston rod nut U = rolled stainless steel AISI 303 piston rod, stainless steel AISI 304 piston-rod nut, stainless steel AISI 420B tie-rods, stainless steel AISI 303 tie-rod nuts W = rolled stainless steel AISI 304 piston rod, stainless steel AISI 304 piston-rod nut, stainless steel AISI 420B tie-rods, stainless steel AISI 303 tie-rod nuts Note: the rod of cylinders with bore of 250 and 320 mm is in C40 chrome plated steel.	
160	BORE 160 = 160 mm - 200 = 200 mm - 250 = 250 mm - 320 = 320 mm	
A	TYPE OF BRACKET A = standard F = cylinder with centre trunnion	
0200	STROKE (see the table)	
	= standard V = FKM rod seals W = all FKM seals +130°C C = PU coated cylinder. Colour: Grey * G = with brass rod scraper (chrome plated stainless steel AISI 420B rod, NBR rod seal) [Ø 250 and 320 excluded] (_ _ _) = extended piston rod _ _ _ mm Notes: the C version is available on request. For further details, contact our technical dept.	

PNEUMATIC SYMBOLS

The pneumatic symbols which have been indicated in the CODING EXAMPLE are shown below.

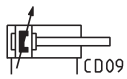

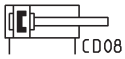

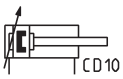

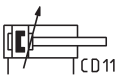

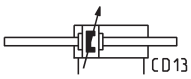

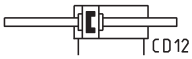

ACCESSORIES FOR SERIES 40 CYLINDERS

Rear trunnion, male
Mod. L

Self aligning rod
Mod. GK

Swivel combination Mod.
C+L+S

Clevis pin Mod. S

90° Swivel combination
Mod. ZS

Counter bracket for
centre trunnion Mod. BF

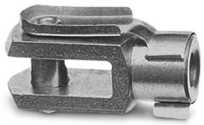

Rod fork end Mod. G

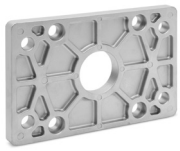

Front and rear flange
Mod. D-E

Centre trunnion Mod. F

Foot mount Mod. B

Swivel ball joint Mod. GA

Female trunnion
Mod. C-H

Piston rod lock nut
Mod. U

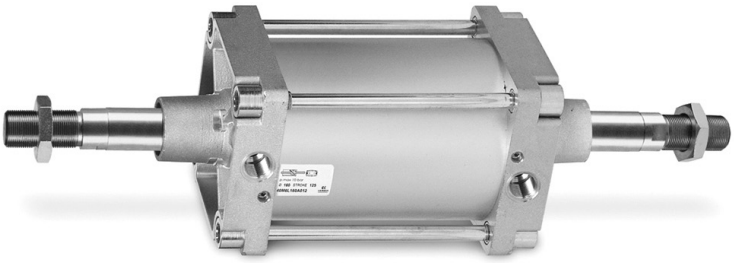

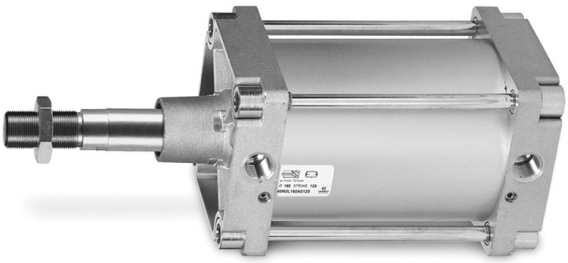

All accessories are supplied separately except for piston rod lock nut Mod. U.
Details about proximity switches and their brackets can be found in the dedicated section.

Series 40 cylinders

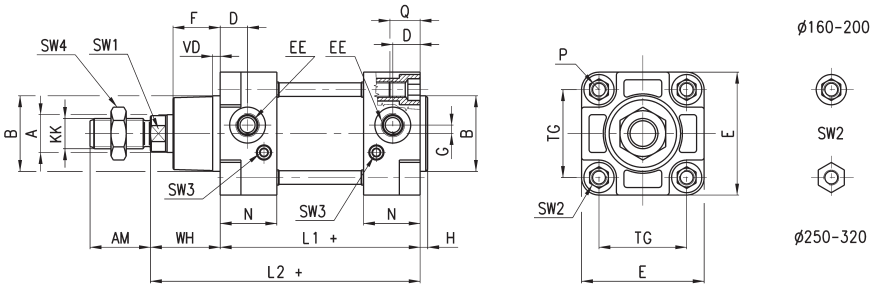

+ = add the stroke

DIMENSIONS																						
Ø	øA	KK	øB	D	G	F	AM	H	EE	WH	L1+	L2+	VD	N	P	Q	TG	E	SW1	SW2	SW3	SW4	front/rear cushion strokes
160	40	M36x2	65	25	12	53.5	72	6	G3\4	80	180	260	6	45	M16	26	140	176	36	17	4	55	29 / 36
200	40	M36x2	75	25	12	63.5	72	6	G3\4	95	180	275	6	45	M16	26	175	216	36	17	4	55	44 / 42
250	50	M42x2	90	31	12	67	84	10	G1	105	200	305	10	53	M20	30	220	270	46	36	4	65	50 / 50
320	63	M48x2	110	31	12	83	96	10	G1	120	220	340	12	55,5	M24	30	270	340	55	41	-	75	56 / 56

Series 40 cylinders - through-rod

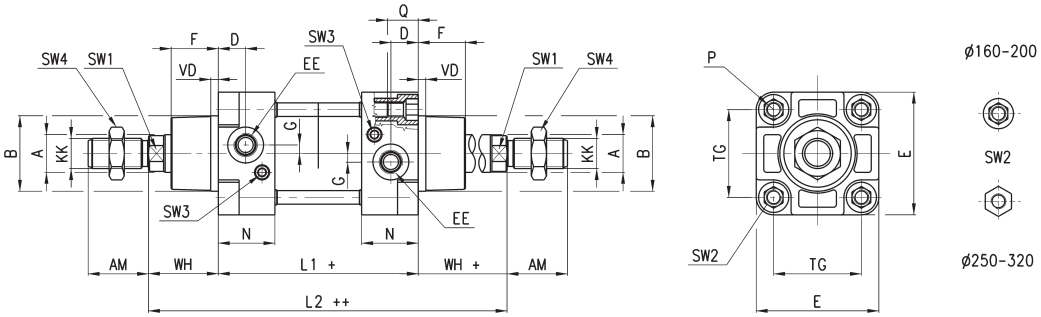

+ = add the stroke once
++ = add the stroke twice

DIMENSIONS																						
Ø	øA	KK	øB	D	G	F	AM	EE	WH	L1+	L2++	VD	N	P	Q	TG	E	SW1	SW2	SW3	SW4	front/rear cushion strokes
160	40	M36x2	65	25	12	53.5	72	G3/4	80	180	340	6	45	M16	26	140	176	36	17	4	55	29
200	40	M36x2	75	25	12	63.5	72	G3/4	95	180	370	6	45	M16	26	175	216	36	17	4	55	44
250	50	M42x2	90	31	12	67	84	G1	105	200	410	10	53	M20	30	220	270	46	36	4	65	50
320	63	M48x2	110	31	12	83	96	G1	120	220	460	12	55.5	M24	30	270	340	55	41	-	75	56

Series 40 cylinders with centre trunnion Mod. F

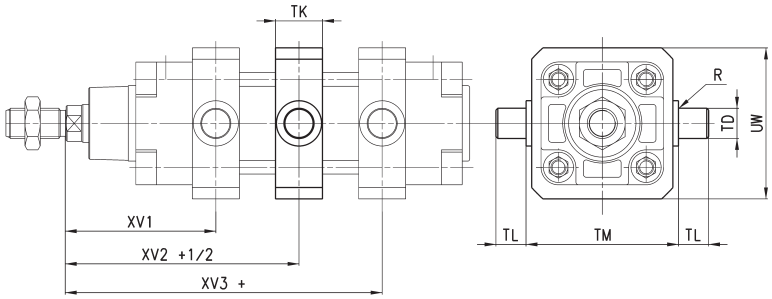

+ = add the stroke
+ 1/2 = add the stroke half

DIMENSIONS										
Ø	XV1	XV2+ 1/2	XV3+	TM	TK	TD	TL	UW	R	NOTE
160	145	170	195	200	40	32	32	190	2	
200	160	185	210	250	40	32	32	240	2	
250	185	205	225	320	50	40	40	300	-	mounting with 4 threaded tie-rods
320	210.5	230	249.5	400	70	50	50	400	-	mounting with 4 threaded tie-rods

Foot mount Mod. B

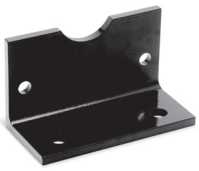

Supplied with:
2x feets in black-painted steel (cataphoresis)
4x white zinc plating screws

For diameters 250 and 320 white zinc plating

+ = add the stroke

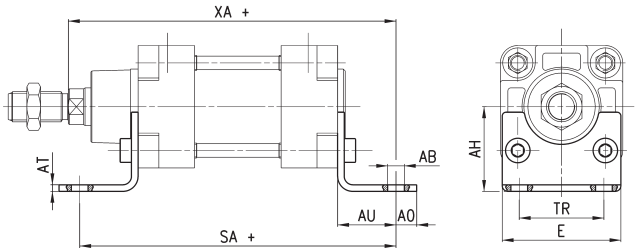

DIMENSIONS										
Mod.	Ø	AT	SA+	XA+	TR	E	ØAB	AH	AO	AU
B-41-160	160	10	300	320	115	175	18.5	115	25	60
B-41-200	200	12	320	345	135	238	24	135	35	70
B-41-250	250	14	350	380	165	270	26	165	25	75
B-41-320	320	20	390	425	200	353	35	200	45	85

Front and rear flange Mod. D-E

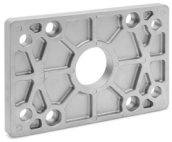

Supplied with:
1x flange
4x screws

+ = add the stroke

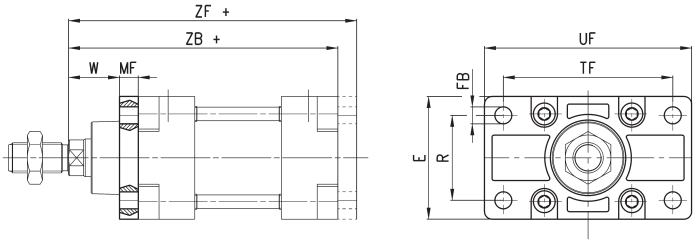

DIMENSIONS											
Mod.	Ø	W	MF	ZB+	TF	R	UF	E	ØFB	ZF+	Material
D-E-41-160	160	60	20	260	230	115	260	180	18	280	aluminium
D-E-41-200	200	70	25	275	270	135	300	220	22	300	aluminium
D-E-41-250	250	80	25	305	330	165	400	285	26	330	zinc-plated steel
D-E-41-320	320	90	30	340	400	200	470	334	33	370	stainless steel 304

Front and rear female trunnion Mod. C-H

Supplied with:
1x female trunnion in Aluminium
4x screws

+ = add the stroke

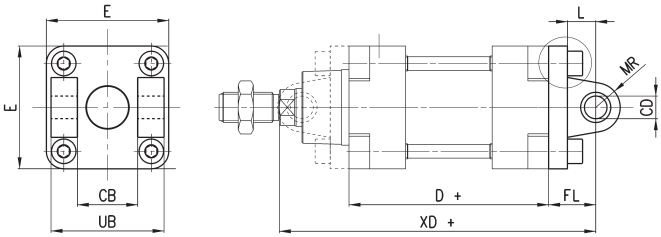

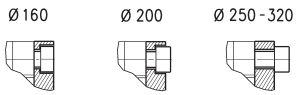

DIMENSIONS										
Mod.	Ø	ØCD	L	FL	D+	XD+	MR	E	CB	UB
C-H-41-160	160	30	35	55	180	315	25	180	90	169
C-H-41-200	200	30	35	60	180	335	25	220	90	169
C-H-41-250	250	40	45	70	200	375	40	270	110	200
C-H-41-320	320	45	50	80	220	420	45	350	120	220

Rear male trunnion Mod. L

Supplied with:
1x male trunnion in Aluminium *
4x screws

* For Ø 320 black-painted steel (cataphoresis)

+ = add the stroke

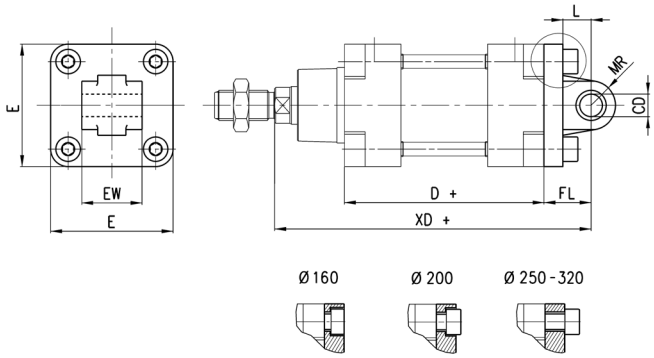

DIMENSIONS								
Mod.	Ø	øCD	L	FL	XD+	MR	E	EW
L-41-160	160	30	35	55	315	25	180	90
L-41-200	200	30	35	60	335	25	220	90
L-41-250	250	40	45	70	375	40	270	110
L-41-320	320	45	50	80	420	45	350	110

Centre trunnion Mod. F

Material:
- zinc-plated steel (Ø 160 and 200)
- painted cast iron (Ø 250 and 320)

+ = add the stroke

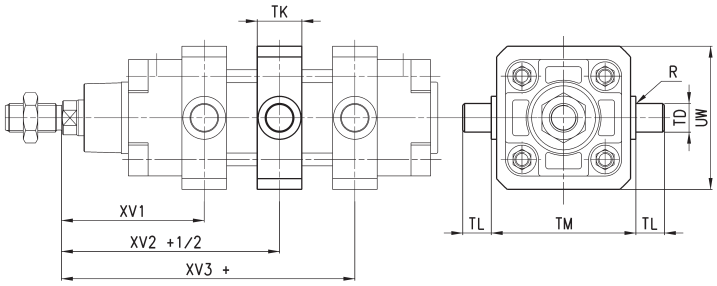

DIMENSIONS											
Mod.	Ø	XV1	XV + 1/2	XV3 +	TM	TK	øTD	TL	UW	R	NOTE
F-160	160	145	170	195	200	40	32	32	190	2	
F-200	200	160	185	210	250	40	32	32	240	2	
F-250	250	185	205	225	320	50	40	40	296	-	mounting with 4 threaded tie-rods
F-320	320	210,5	230	249,5	400	70	50	50	400	-	mounting with 4 threaded tie-rods

90° Swivel combination Mod. ZS*

* not according to standard

Supplied with:
1x 45° swivel combination in Aluminium

+ = add the stroke

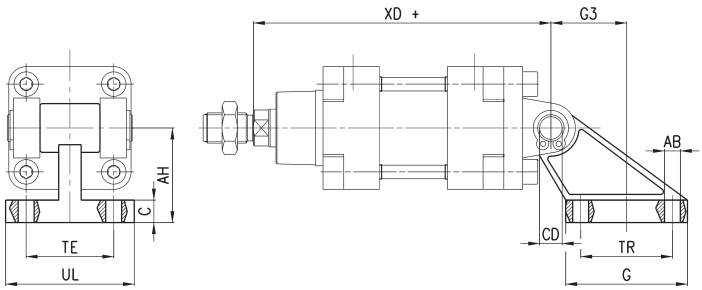

DIMENSIONS											
Mod.	Ø	TE	TR	øAB	AH	C	G	øCD	UL	XD +	G3
ZS-160*	160	140	140	18	140	20	180	30	180	315	105
ZS-160N	160	118	88	14	115	25	126	30	156	315	53
ZS-200*	200	175	175	18	140	25	220	30	220	335	125
ZS-200N	200	122	90	18	135	30	130	30	162	335	60

Swivel combination Mod. C+L+S

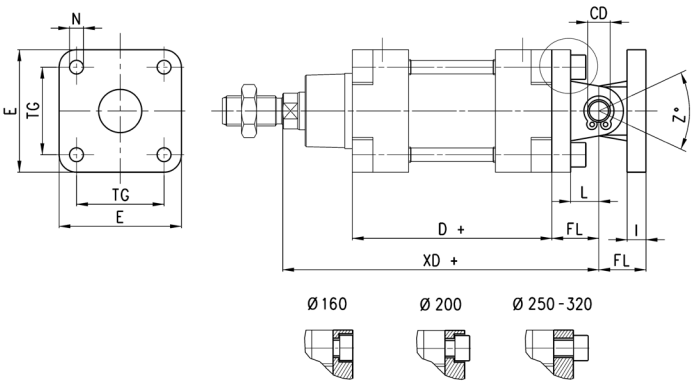

+ = add the stroke

DIMENSIONS											
Mod.	Ø	E	TG	øN	D+	XD+	øCD	L	FL	I	Z° (max)
C+L+S	160	180	140	18	180	315	30	35	55	20	25
C+L+S	200	220	175	18	180	335	30	35	60	25	20
C+L+S	250	270	220	22	200	375	40	45	70	25	33
C+L+S	320	350	270	30	220	420	40	50	80	30	30

Counter bracket for centre trunnion Mod. BF

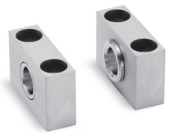

Supplied with 2 supports
in Aluminium

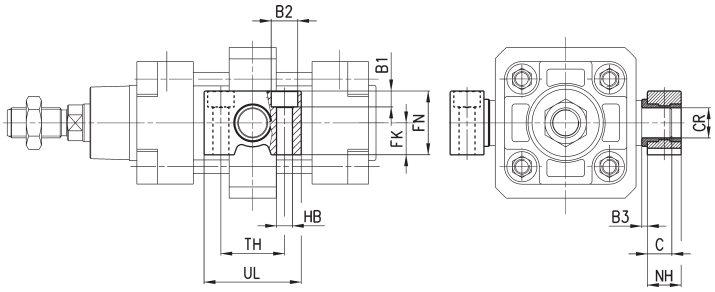

DIMENSIONS												
Mod.	Ø	øCR	NH	C	B3	TH	UL	FK	FN	B1	øB2	øHB
BF-160-200	160-200	32	35	17,5	4	60	92	30	60	16	26	18

Rod fork end Mod. G

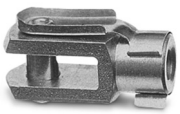

ISO 8140

Material:
- zinc-plated steel

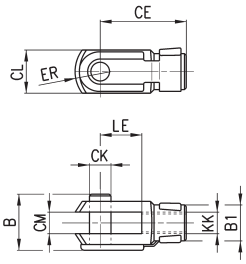

DIMENSIONS										
Mod.	Ø	ØCK	LE	CM	CL	ER	CE	KK	B	ØB1
G-160-200	160-200	35	72	35	70	44	144	M36X2	92	60
G-250	250	40	84	40	85	-	168	M42x2	96	70
G-320	320	50	96	50	90	73	192	M48x2	120	80

Swivel ball joint Mod. GA

ISO 8139

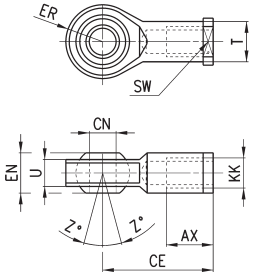

DIMENSIONS											
Mod.	Ø	øCN	U	EN	ER	AX	CE	KK	ØT	Z	SW
GA-160-200	160-200	35	28	43	40	56	125	M36x2	46	6	50
GA-250	250	40	33	49	-	60	142	M42x2	55	17	55
GA-320	320	50	45	60	58.5	65	160	M48x2	65	12	65

Clevis pin Mod. S

Supplied with:
1x centering pin
2x seeger in steel

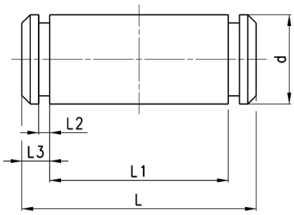

DIMENSIONS						
Mod.	Ø	d	L	L1	L2	L3
S-160-200	160-200	30	180.5	172	1.6	4.25
S-250	250	40	210	202	1.85	4.5
S-320	320	45	236	222	1.85	7

Piston rod lock nut Mod. U

ISO 4035
Material: zinc-plated steel

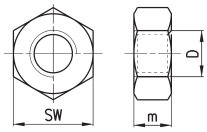

DIMENSIONS				
Mod.	Ø	D	m	SW
U-160-200	160-200	M36x2	14	55
U-250	250	M42x2	16	65
U-320	320	M48x2	24	75

Self aligning rod Mod. GK

Material: zama and zinc-plated steel.

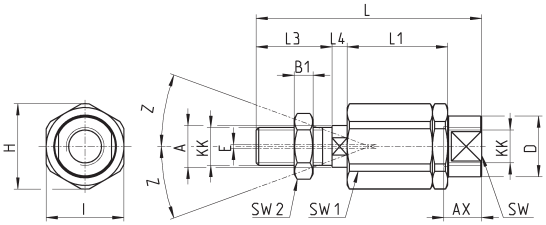

DIMENSIONS																
Mod.	Ø	KK	L	L1	L3	L4	øA	øD	H	I	SW	SW1	SW2	B1	AX	Z	E
GK-160-200	160-200	M36x2	190	77	72	15.5	39	57	75	70	54	32	55	14	68	4	2

Series 41 cylinders - Aluminium profile

Double-acting, cushioned, magnetic
ø 160 - 200 mm

- In compliance with ISO 15552 standards and with the previous DIN/ISO 6431/ VDMA 24562 standards
- Rolled stainless steel rod
- Adjustable pneumatic cushioning
- Rod scraper in brass

Series 41 cylinders comply with the ISO 15552 standards and can be assembled with the entire range of standard accessories.

The mounting brackets used on the end-blocks tube are designed in an extremely secure way, making use of the cylinder tie-rods positioned internally and not visible on the assembled cylinders. This cylinder series is normally equipped with adjustable cushioning.
Moreover, to reduce the noise of the impact of the piston and end-caps, these cylinders are equipped with a mechanical cushioning.

GENERAL DATA

Type of construction	with tie-rods
Operation	double-acting
Design	ISO 15552
Materials	AL end blocks and piston - rolled stainless steel AISI 420B piston rod - zinc-plated steel piston rod nut - anodized AL-profile tube zinc-plated steel tie-rods and tie-rod nuts - NBR rod - piston - cushion seals - brass rod scraper
Mounting	with tie-rods, front flange, rear flange, feet, centre trunnion, front and rear trunnion, swivel combination
Strokes min - max	10 ÷ 2500 mm
Operating temperature	0°C ÷ 80°C (with dry air - 20°C)
Operating pressure	1 ÷ 10 bar
Speed	10 ÷ 500 mm/sec (without load)
Fluid	filtered air, without lubrication. If lubricated air is used, it is recommended to use oil ISOVG32. Once applied the lubrication should never be interrupted.

STANDARD STROKES FOR DOUBLE-ACTING CYLINDERS SERIES 41

✖ = Double-acting

STANDARD STROKES														
Ø	25	50	75	80	100	125	150	160	200	250	300	320	400	500
160		✖			✖		✖		✖				✖	✖
200		✖			✖				✖					

CODING EXAMPLE

41	M	2	P	160	A	0200	

41	SERIES	
M	VERSION M = standard magnetic	
2	OPERATION 2 = double-acting, front and rear cushions 3 = double-acting, no cushion 4 = double-acting, rear cushions 5 = double-acting, front cushion 6 = double-acting, through-rod, front and rear cushions 8 = double-acting, through-rod, no cushion	PNEUMATIC SYMBOLS CD09 CD08 CD10 CD11 CD13 CD12
P	MATERIALS P = see the GENERAL DATA table on the previous page R = stainless steel AISI 420B tie-rods, stainless steel AISI 303 tie-rod nuts C = rolled stainless steel AISI 303 piston rod, stainless steel AISI 304 piston rod nut U = rolled stainless steel AISI 303 piston rod, stainless steel AISI 304 piston rod nut, stainless steel AISI 420B tie-rods, stainless steel AISI 303 tie-rod nuts W = rolled stainless steel AISI 304 piston rod, stainless steel AISI 304 piston rod nut, stainless steel AISI 420B tie-rods, stainless steel AISI 303 tie-rod nuts	
160	BORE 160 = 160 mm - 200 = 200 mm	
A	TYPE OF DESIGN A = tie-rods F = cylinder with centre trunnion	
0200	STROKE (see the table)	
	= standard V = FKM rod seals W = all FKM seals +130°C C = PU coated cylinder. Color: Grey * G = with brass rod scraper (chrome plated stainless steel AISI 420B rod, NBR rod seal) (_ _ _) = extended piston rod _ _ _ mm * Version C: available on request. For further information, please contact our technical dept.	

PNEUMATIC SYMBOLS

The pneumatic symbols which have been indicated in the CODING EXAMPLE are shown below.

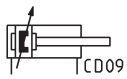

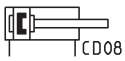

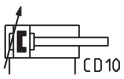

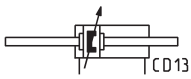

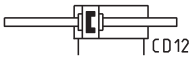

ACCESSORIES FOR CYLINDERS SERIES 41

Clevis pin Mod. S

90° swivel combination Mod. ZS

Rear trunnion, male Mod. L

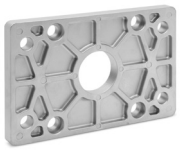

Front and rear flange Mod. D-E

Counter bracket for centre trunnion Mod. BF

Centre trunnion Mod. F

Foot mount Mod. B

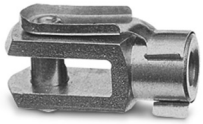

Rod fork end Mod. G

Front and rear female trunnion Mod. C-H

Swivel ball joint Mod. GA

Swivel combination Mod. C+L+S

Piston rod lock nut Mod. U

Self aligning rod Mod. GK

All accessories are supplied separately, except for the piston rod lock nut Mod. U

Cylinders Series 41

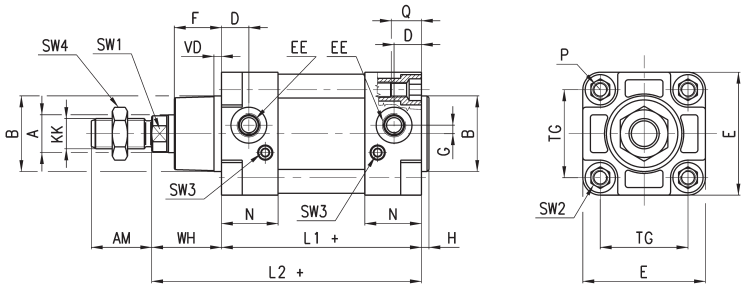

+ = add the stroke

DIMENSIONS																						
Ø	øA	KK	øB	D	G	F	AM	H	EE	WH	L1+	L2+	VD	N	P	Q	TG	E	SW1	SW2	SW3	SW4	front/rear cushion strokes
160	40	M36x2	65	25	12	53.5	72	6	G3\4	80	180	260	6	45	M16	26	140	176	36	17	4	55	29 / 36
200	40	M36x2	75	25	12	63.5	72	6	G3\4	95	180	275	6	45	M16	26	175	216	36	17	4	55	44 / 42

Cylinders Series 41 - through-rod

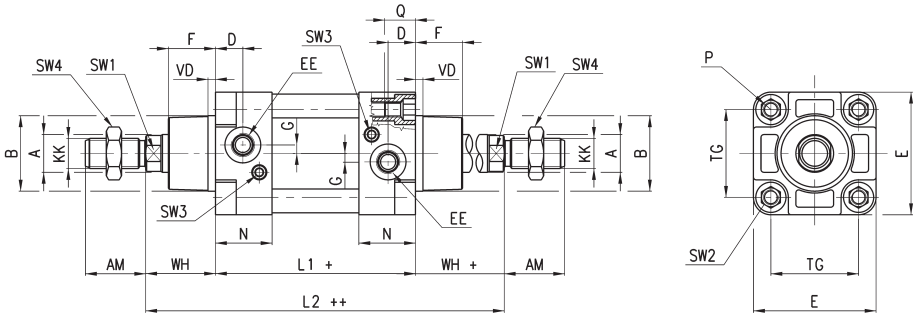

+ = add the stroke once
++ = add the stroke twice

DIMENSIONS																						
Ø	A	KK	B	D	G	F	AM	EE	WH	L1+	L2++	VD	N	P	Q	TG	E	SW1	SW2	SW3	SW4	front/rear cushion strokes
160	40	M36x2	65	25	12	53.5	72	G3\4	80	180	340	6	45	M16	26	140	176	36	17	4	55	29
200	40	M36x2	75	25	12	63.5	72	G3\4	95	180	370	6	45	M16	26	175	216	36	17	4	55	44

Cylinders Series 41 with centre trunnion Mod. F

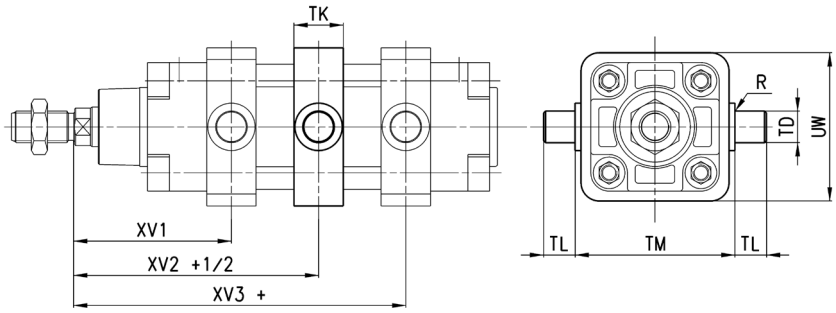

+ = add the stroke
+ 1/2 = add the stroke half

DIMENSIONS									
Ø	XV1	XV2	XV3+	TM	TK	TD	TL	UW	R
160	145	170	195	200	40	32	32	200	0,2
200	160	185	210	250	40	32	32	250	0,2

Foot mount Mod. B

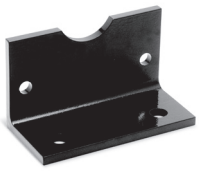

Material: black-painted steel (cataphoresis)
Supplied with:
2x feet
4x screws

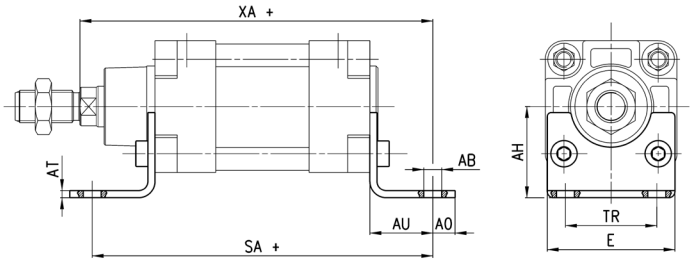

+ = add the stroke

DIMENSIONS										
Mod.	Ø	AT	SA+	XA+	TR	E	ØAB	AH	AO	AU
B-41-160	160	10	300	320	115	175	18.5	115	25	60
B-41-200	200	12	320	345	135	238	24	135	35	70

Front and rear flange Mod. D-E

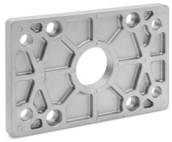

Material: Aluminium.
Supplied with:
1x flange
4x screws

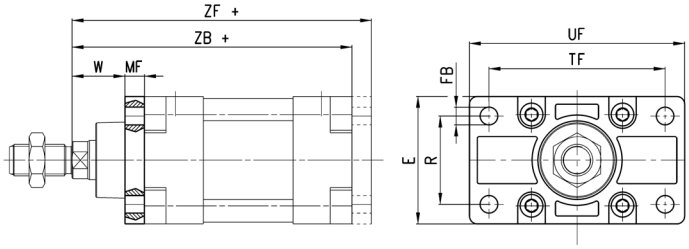

+ = add the stroke

DIMENSIONS										
Mod.	Ø	W	MF	ZB+	TF	R	UF	E	ØFB	ZF+
D-E-41-160	160	60	20	260	230	115	260	180	18	280
D-E-41-200	200	70	25	275	270	135	300	220	22	300

Front and rear female trunnion Mod. C-H

Material: Aluminium.
Supplied with:
1x female trunnion
4x screws

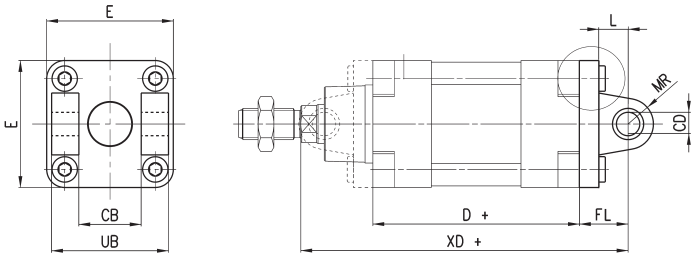

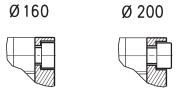

+ = add the stroke

DIMENSIONS										
Mod.	Ø	ØCD	L	FL	D+	XD+	MR	E	CB	UB
C-H-41-160	160	30	35	55	180	315	25	180	90	169
C-H-41-200	200	30	35	60	180	335	25	220	90	169

Rear male trunnion Mod. L

Material: Aluminium
Supplied with:
1x male trunnion
4x screws

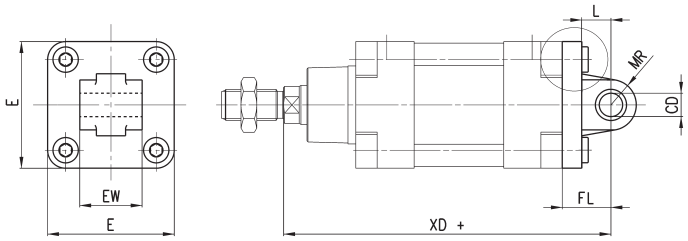

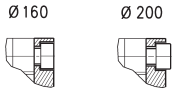

+ = add the stroke

DIMENSIONS								
Mod.	Ø	øCD	L	FL	XD+	MR	E	EW -0.5 -1.2
L-41-160	160	30	35	55	315	25	180	90
L-41-200	200	30	35	60	335	25	220	90

Centre trunnion Mod. F

Material: white zinc-plated steel.
Supplied with:
1x centre trunnion
4x clamping elements
4x locking screws

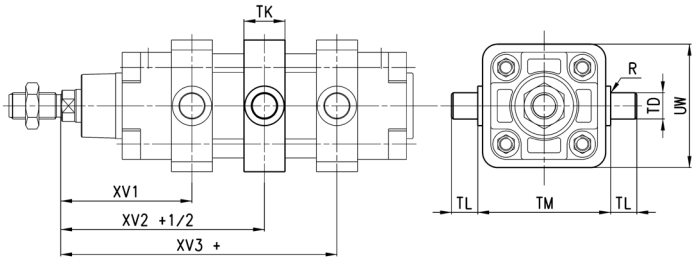

+ = add the stroke

DIMENSIONS										
Mod.	Ø	XV1	XV+1/2	XV3+	TM	h	øTD	TL	UW	R
F-41-160	160	145	170	195	200	40	32	32	200	0.2
F-41-200	200	160	185	210	250	40	32	32	250	0.2

90° Swivel combination Mod. ZS

Material: Aluminium
* not according to standard

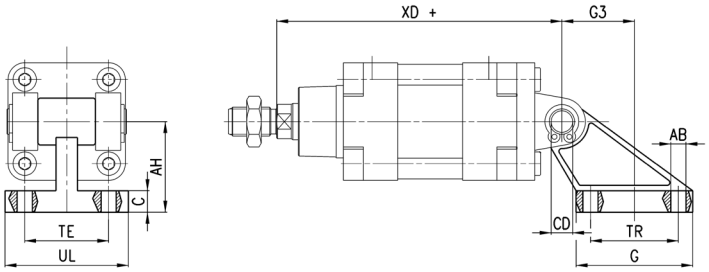

+ = add the stroke

DIMENSIONS											
Mod.	Ø	TE	TR	øAB	AH	C	G	øCD	UL	XD+	G3
ZS-160*	160	140	140	18	140	20	180	30	180	315	105
ZS-160N	160	118	88	14	115	25	126	30	156	315	53
ZS-200*	200	175	175	18	140	25	220	30	220	335	125
ZS-200N	200	122	90	18	135	30	130	30	162	335	60

Swivel combination Mod. C+L+S

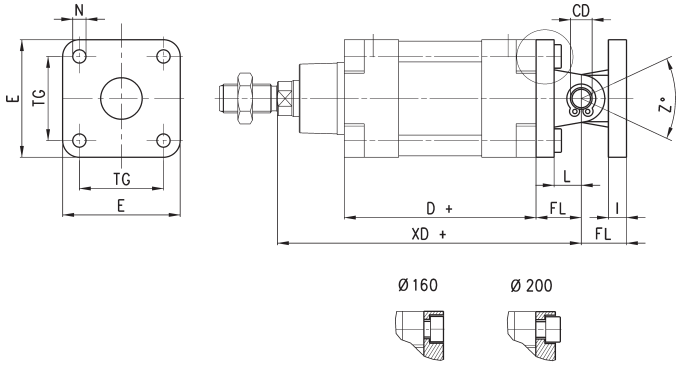

+ = add the stroke

DIMENSIONS											
Mod.	Ø	øCD	L	FL	D+	XD+	TG	E	øN	I	Z° (max)
C+L+S	160	30	35	55	180	315	140	180	18	20	25
C+L+S	200	30	35	60	180	335	175	220	18	25	20

Counter bracket for centre trunnion Mod. BF

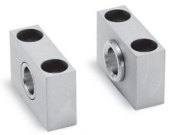

Material: Aluminium.
Supplied with:
2x supports

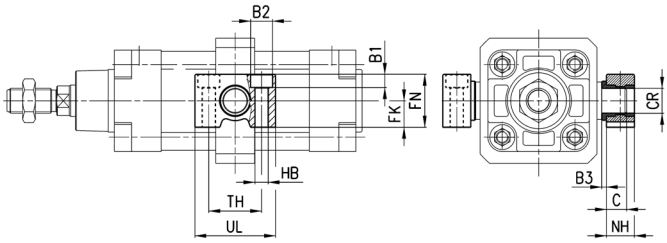

DIMENSIONS												
Mod.	Ø	øCR	NH	C	B3	TH	UL	FK	FN	B1	øB2	øHB
BF-160-200	160-200	32	35	17,5	4	60	92	30	60	16	26	18

Rod fork end Mod. G

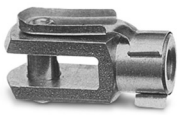

ISO 8140.
Material: zinc-plated steel.

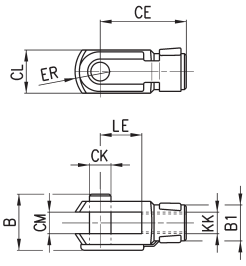

DIMENSIONS										
Mod.	Ø	øCK	LE	CM	CL	ER	CE	KK	B	øB1
G-160-200	160-200	35	72	35	70	44	144	M36X2	92	60

Swivel ball joint Mod. GA

ISO 8139.
Material: zinc-plated steel.

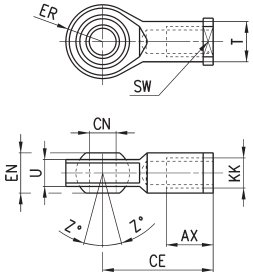

DIMENSIONS											
Mod.	Ø	øCN	U	EN	ER	AX	CE	KK	ØT	Z	SW
GA-160-200	160-200	35	28	43	40	56	125	M36x2	46	6	50

Clevis pin Mod. S

Supplied with:
1x centering pin in stainless steel 303
2x seeger in steel

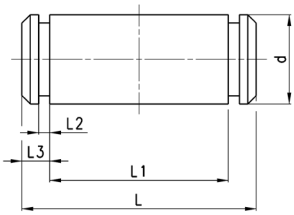

DIMENSIONS						
Mod.	Ø	d	L	L1	L2	L3
S-160-200	160-200	30	180.5	172	1.6	4.25

Piston rod lock nut Mod. U

ISO 4035
Material: zinc-plated steel

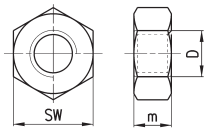

DIMENSIONS				
Mod.	Ø	D	m	SW
U-160-200	160-200	M36x2	14	55

Self aligning rod Mod. GK

Material: zama and zinc-plated steel.

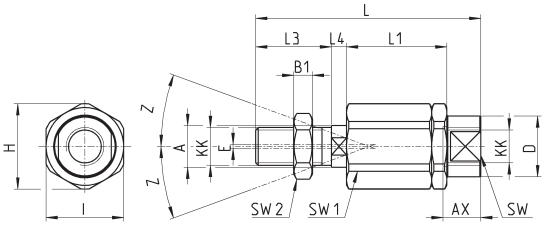

DIMENSIONS																
Mod.	Ø	KK	L	L1	L3	L4	øA	øD	H	I	SW	SW1	SW2	B1	AX	Z	E
GK-160-200	160-200	M36x2	190	77	72	15.5	39	57	75	70	54	32	55	14	68	4	2

Series 63 ISO 15552 cylinders

New versions

Single and double-acting, magnetic, cushioned
ø 32, 40, 50, 63, 80, 100, 125 mm

The Series 63 pneumatic cylinders have been developed to guarantee high performance and versatility.
Thanks to a new system of adjustable pneumatic cushioning, the cylinders can always guarantee the best regulation whilst significantly reducing noise caused by the impact of the piston on the end block.

Besides the standard version, which can be used in many sectors, specific solutions have been developed for applications such as food processing, agriculture, in tensioning, dosing systems and dancer arms for winding applications. There are also versions for demanding application environments, capable of withstanding extreme temperatures, corrosive atmospheres etc.

- » In compliance with the ISO 15552 standard
- » Weight reduced by 25%
- » Low noise
- » More accurate with fine regulation of cushioning
- » Flexibility and versatility

VERSIONS AVAILABLE:

- » Low friction
- » Uniform movement (low speed)
- » High and low temperatures
- » Corrosion-resistant
- » Hydrolytic environment
- » Food and beverage
- » Lube-free operation
- » Dirty and dusty environments
- » Protective bellows
- » Back to back
- » Tandem and multi-position
- » With rod lock
- » Polyurethane coating
- » ATEX

GENERAL DATA

Type of construction	profile (with screws) and round tube (with tie-rods)
Design	ISO 15552
Operation	single and double-acting
Type of mounting	with front / rear flange, foot mounting, with front / rear / centre / swivel trunnion
Stroke min - max	10 ÷ 2500 mm
Operating temperature	standard and low friction: 0°C ÷ 80°C (with dry air -20°C) high temperatures (version W): 0°C ÷ 150°C (with dry air -20°C) low temperatures (version Z): -40°C ÷ 60°C (with dry air -40°C) low temperatures (version Y): -50°C ÷ 60°C (with dry air -50°C)
Storage temperature	0°C ÷ 80°C (with dry air -20°C)
Operating pressure	1 ÷ 10 bar (standard, high and low temperatures) 0.1 ÷ 10 bar (low friction)
Speed	10 ÷ 1000 mm/sec, no load (standard, high and low temperatures) 5 ÷ 1000 mm/sec, no load (low friction and uniform movement)
Fluid	filtered air in class 7.8.4, according to ISO 8573-1. If lubricated air is used, it is recommended to use oil ISOVG32. Once applied the lubrication should never be interrupted.
Use with sensors	model CSH

STANDARD STROKES FOR CYLINDERS SERIES 63

■ = Single-acting, front spring (standard and high temperatures); ▲ = Single-acting, rear spring (standard and high temperatures);
✖ = Double-acting (standard, low friction, high/low temperatures) Other strokes up to 2500 mm are available on request.

STANDARD STROKES														
Ø	25	50	75	80	100	125	150	160	200	250	300	320	400	500
32	■ ▲ ✖	■ ▲ ✖	■ ✖	✖	✖	✖	✖	✖	✖	✖	✖	✖	✖	✖
40	■ ▲ ✖	■ ▲ ✖	■ ✖	✖	✖	✖	✖	✖	✖	✖	✖	✖	✖	✖
50	■ ▲ ✖	■ ▲ ✖	■ ✖	✖	✖	✖	✖	✖	✖	✖	✖	✖	✖	✖
63	■ ▲ ✖	■ ▲ ✖	■ ✖	✖	✖	✖	✖	✖	✖	✖	✖	✖	✖	✖
80	■ ▲ ✖	■ ▲ ✖	■ ✖	✖	✖	✖	✖	✖	✖	✖	✖	✖	✖	✖
100		■ ▲ ✖	■ ✖	✖	✖	✖	✖	✖	✖	✖	✖	✖	✖	✖
125		■ ▲ ✖	■ ✖	✖	✖	✖	✖	✖	✖	✖	✖	✖	✖	✖

CODING EXAMPLE

63	M	P	2	C	050	A	0200	W				

63	SERIES	
M	VERSION: M = standard, magnetic V = uniform movement (no stick slip), magnetic L = low friction, magnetic	
P	CONSTRUCTION: T = round tube P = profile	
2	OPERATION: 1 = single-acting, front spring 2 = double-acting 6 = double-acting, through-rod 7 = single-acting, through-rod 9 = single-acting, rear spring	PNEUMATIC SYMBOLS: CS07/CS18 CD08 - CD09 - CD10 - CD11 CD13 CS11 CS14/CS17
C	CUSHIONING: N = no cushioning (mechanical endstops) C = cushioning on both sides F = front cushioning R = rear cushioning	PNEUMATIC SYMBOLS: CD08 CD09/CD13 CD11 CD10
050	BORE: 032 = 32 mm 040 = 40 mm 050 = 50 mm 063 = 63 mm	080 = 80 mm 100 = 100 mm 125 = 125 mm
A	CONSTRUCTIVE TYPE: A = standard with rod nut RL = cylinder with rod lock	DC = back to back cylinder with DC accessory [X1/X2] TR = back to back cylinder for round tube [X1/X2] F = cylinder with centre trunnion
0200	STROKE: = standard N = tandem / = more positions X1/X2 [X1<X2]	
W	TEMPERATURE RANGE: = standard (-20°/+80°) W = high temperatures (150°C)	Z = low temperatures (-40°C) Y = low temperatures (-50°C)
	RESISTANCE TO CORROSION: = standard C1 = rod nut AISI 304 stainless steel, rod AISI 304 stainless steel C2 = end cap treated screws (profile) or AISI 303 tie-rods and AISI 420B tie-rods (round tube)	C3 = C2 + AISI 316 rod nut, AISI 316 rod C4 = C1 + C2 C5 = C3 + end caps with triple protection
	ROD VARIATIONS: = standard (male rod thread) F = female rod thread K = end caps with Kanigen treatment (only for corrosion resistance category C2, C3 and C4) L = without rod seal (rear air inlet only)* V = FKM rod seal R = NBR rod seal U = unlubricated operation	H = hydrolytic environment A = use in food and other frequent washdown applications G = dry and dusty environments (with brass rod scraper and chrome-plated stainless steel AISI 420B rod) B = cylinder with NBR bellow rod protection (_ _ _) = extended rod _ _ _ mm
	OTHER: P = cylinder with RAL 7035 polyurethane coating	
	CERTIFICATIONS: EX = ATEX	

* Only for low friction

PNEUMATIC SYMBOLS

The pneumatic symbols which have been indicated in the CODING EXAMPLE are shown below.

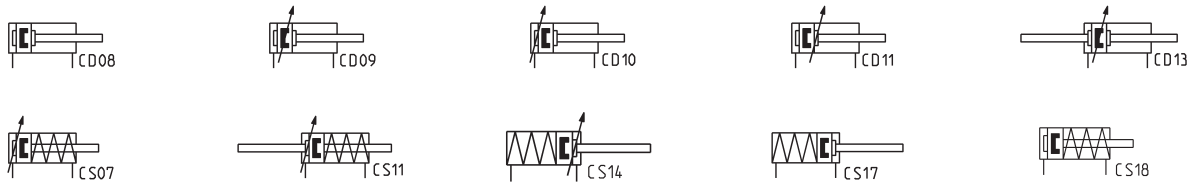

MATERIALS

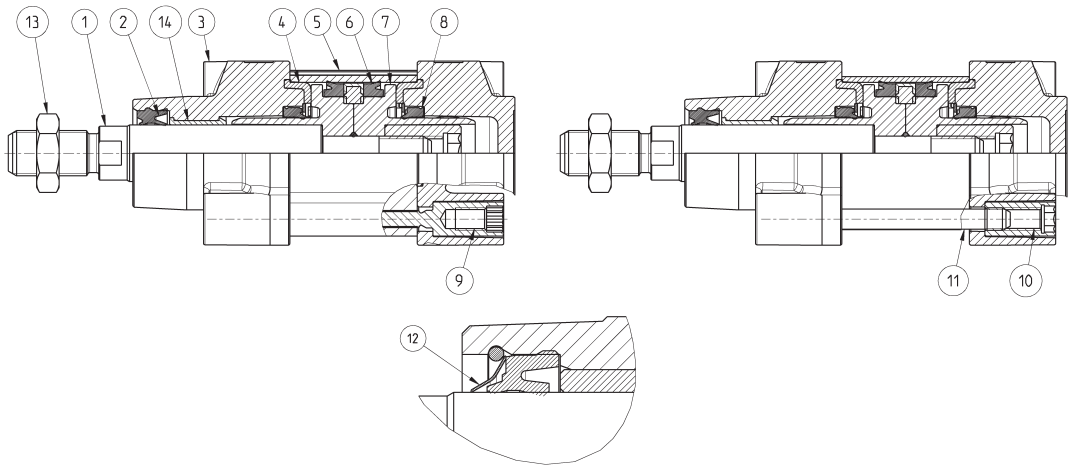

LIST OF COMPONENTS	Standard, profile	Standard, round tube	Low friction (L)	Rod scraper (G)	Low temperatures (Z/Y)	High temperatures (W)	Resistance to corrosion (C1)
PARTS							
1 - Rod	AISI 420B	AISI 420B	AISI 420B	Chrome-plated AISI 420B	Chrome-plated AISI 420B	AISI 420B	AISI 304
2 - Rod seal	PU	PU	NBR	NBR	PU for -40°C/-50°C	FKM	PU
3 - End-block	Aluminium	Aluminium	Aluminium	Aluminium	Aluminium	Aluminium	Aluminium
4 - Counterbore seal	NBR	NBR	NBR	NBR	NBR for -40°C/-50°C	FKM	NBR
5 - Extruded profile	Anodized aluminium	Anodized aluminium	Anodized aluminium	Anodized aluminium	Anodized aluminium	Anodized aluminium	Anodized aluminium
6 - Piston seal	PU	PU	NBR	PU	PU for -40°C/-50°C	FKM	PU
7 - Piston	Technopolymer (ø 32) or Aluminium (ø 40 ÷ 125)	Aluminium (ø 125) or Technopolymer (ø 32 ÷ 100)	Aluminium	Aluminium	Aluminium	Aluminium	Aluminium
8 - Cushion seal	PU	PU	PU	PU	PU	FKM	PU
9 - Self-tapping screw	Zinc-plated steel	-	Zinc-plated steel	Zinc-plated steel	Zinc-plated steel	Zinc-plated steel	Zinc-plated steel
10 - Tie-rod nut	-	Zinc-plated steel	Zinc-plated steel	Zinc-plated steel	AISI 303	Zinc-plated steel	Zinc-plated steel
11 - Tie-rod	-	Zinc-plated steel	Zinc-plated steel	Zinc-plated steel	AISI 420B	Zinc-plated steel	Zinc-plated steel
12 - Rod scraper	-	-	-	Brass	Brass	-	-
13 - Rod nut	Zinc-plated steel	Zinc-plated steel	Zinc-plated steel	Zinc-plated steel	AISI 304	Zinc-plated steel	AISI 304
14 - Rod guide bush	Technopolymer	Technopolymer	Technopolymer	Technopolymer	Technopolymer	Steel + PTFE	Technopolymer

Series 63 low friction cylinders - APPLICATION EXAMPLES

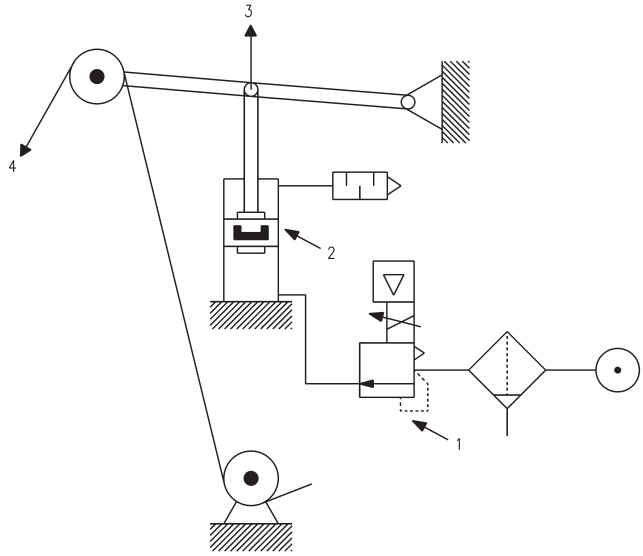

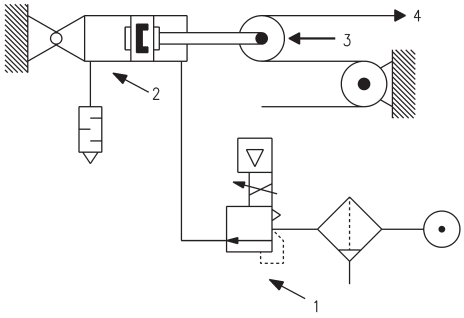

CYLINDER IN THRUST

DRAWING NOTES:
1. Precision pressure regulator or proportional regulator
2. Low friction cylinder
3. Force direction
4. Band

CYLINDER IN TRACTION

Note: in order to reach the highest performance, it is recommended to connect a precision pressure regulator or a proportional regulator with the low friction cylinder as shown in the drawing.

SERIES 63 CYLINDERS ACCESSORIES

Piston rod socket joint
Mod. GY

Piston rod lock nut
Mod. U

Clevis pin Mod. S

Rear trunnion ball-joint
Mod. R

Coupling piece
Mod. GKF

Swivel ball joint Mod. GA

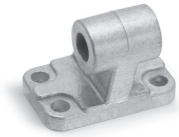

90° male trunnion
Mod. ZC

Swivel Combination
Mod. C+L+S

Front and rear flange
Mod. D-E

Self aligning rod
Mod. GK

Centre trunnion
Mod. F-63, profile cyl.

Foot mount
Mod. B-41

Front female trunnion
Mod. H and C-H

Rear female trunnion
Mod. C and C-H

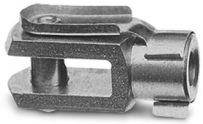

Rod fork end Mod. G

Rear trunnion male
Mod. L

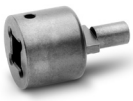

Disassemble cyl. key Ø 80
and 100, round tube

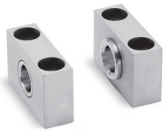

Counter bracket for centre
trunnion Mod. BF

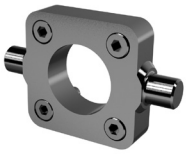

Front/rear spot faced
trunnion Mod. FN

Opposed cylinder coupler
Mod. DC-63

Centre trunnion Mod. F,
round tube cyl.

Accessory to mount valves
on the cylinder

Special key to
disassemble cylinders Ø

All accessories are supplied separately, except for piston rod lock nut Mod. U

Series 63 cylinders - profile, double-acting

Versions: 63MP2... 63LP2... and 63VP2...

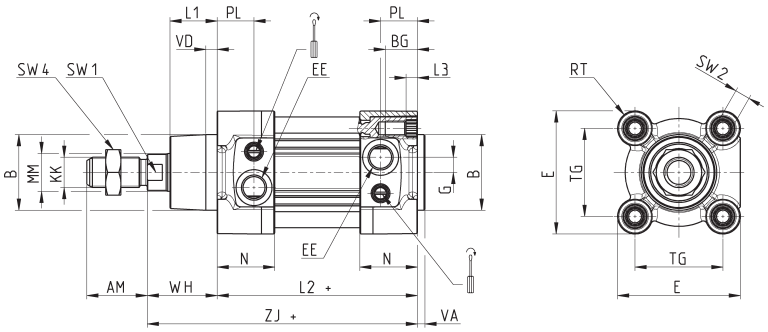

+ = add the stroke

DIMENSIONS																						
Ø	ØMM	KK	ØB	PL	L1	AM	VA	EE	WH	L2+	L3	ZJ+	VD	N	BG	RT	G	TG	E	SW1	SW2	SW4	Front/rear cushion stroke
32	12	M10x1.25	30	18.5	18	22	4	G1/8	26	94	5.5	120	5	27	16	M6	5	32.5	47	10	6	17	17
40	16	M12x1.25	35	19	21	24	4	G1/4	30	105	5.5	135	5	30	16	M6	5	38	55	13	6	19	18
50	20	M16x1.5	40	19.5	25	32	4	G1/4	37	106	6	143	6	30.5	16	M8	8	46.5	65	17	8	24	20
63	20	M16x1.5	45	24	26	32	4	G3/8	37	121	6	158	6	37.5	16	M8	8	56.5	75	17	8	24	22
80	25	M20x1.5	45	23.5	30	40	4	G3/8	46	128	0	174	7	37	19	M10	8	72	93	22	6	30	25
100	25	M20x1.5	55	24	35	40	4	G1/2	51	138	0	189	7	39.5	19.5	M10	8	89	110	22	6	30	26
125	32	M27x2	60	28	42	54	6	G1/2	65	160	6	225	8	44	23	M12	10.5	110	135	27	12	41	33

Series 63 cylinders - round tube, double-acting

Versions: 63MT2... 63LT2... and 63VT2...

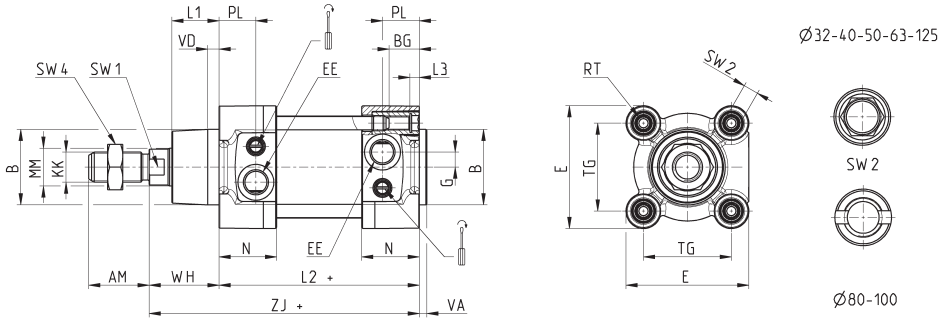

+ = add the stroke

Table note:
* = special key 80-62/8C
(see accessories)

DIMENSIONS																						
Ø	ØMM	KK	ØB	PL	L1	AM	VA	EE	WH	L2+	L3	ZJ+	VD	N	BG	RT	G	TG	E	SW1	SW2	SW4	Front/rear cushion stroke
32	12	M10x1.25	30	18.5	18	22	4	G1/8	26	94	5	120	5	27	16	M6	5	32.5	47	10	6	17	17
40	16	M12x1.25	35	19	21	24	4	G1/4	30	105	5	135	5	30	16	M6	5	38	55	13	6	19	18
50	20	M16x1.5	40	19.5	25	32	4	G1/4	37	106	5	143	6	30.5	16	M8	8	46.5	65	17	8	24	20
63	20	M16x1.5	45	24	26	32	4	G3/8	37	121	5	158	6	37.5	16	M8	8	56.5	75	17	8	24	22
80	25	M20x1.5	45	23.5	30	40	4	G3/8	46	128	0	174	7	37	19	M10	8	72	93	22	*	30	25
100	25	M20x1.5	55	24	35	40	4	G1/2	51	138	0	189	7	39.5	19.5	M10	8	89	110	22	*	30	26
125	32	M27x2	60	28	42	54	6	G1/2	65	160	6	225	8	44	23	M12	10.5	110	135	27	12	41	33

Series 63 cylinders - profile, single-acting, front spring

Versions: 63MP1...

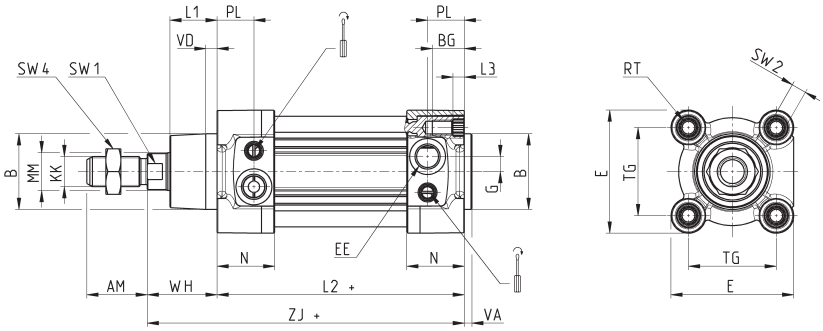

+ = add the stroke

DIMENSIONS																						
Ø	ØMM	KK	ØB	PL	L1	AM	VA	EE	WH	L2+	L3	ZJ+	VD	N	BG	RT	G	TG	E	SW1	SW2	SW4	Front/rear cushion stroke
32	12	M10x1.25	30	18.5	18	22	4	G1/8	26	119	5.5	145	5	27	16	M6	5	32.5	47	10	6	17	17
40	16	M12x1.25	35	19	21	24	4	G1/4	30	130	5.5	160	5	30	16	M6	5	38	55	13	6	19	18
50	20	M16x1.5	40	19.5	25	32	4	G1/4	37	131	6	168	6	30.5	16	M8	8	46.5	65	17	8	24	20
63	20	M16x1.5	45	24	26	32	4	G3/8	37	146	6	183	6	37.5	16	M8	8	56.5	75	17	8	24	22
80	25	M20x1.5	45	23.5	30	40	4	G3/8	46	153	0	199	7	37	19	M10	8	72	93	22	6	30	25
100	25	M20x1.5	55	24	35	40	4	G1/2	51	163	0	214	7	39.5	19.5	M10	8	89	110	22	6	30	26
125	32	M27x2	60	28	42	54	6	G1/2	65	185	6	250	8	44	23	M12	10.5	110	135	27	12	41	33

Series 63 cylinders - profile, single-acting, rear spring

Versions: 63MP9...

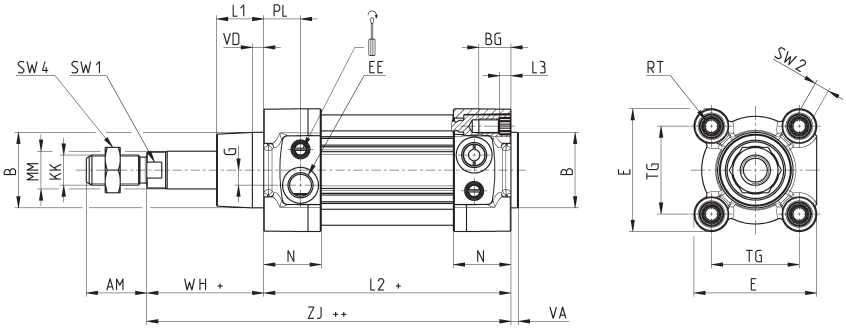

+ = add the stroke
++ = add the stroke twice

DIMENSIONS																						
Ø	ØMM	KK	ØB	PL	L1	AM	VA	EE	WH+	L2+	L3	ZJ++	VD	N	BG	RT	G	TG	E	SW1	SW2	SW4	Front/rear cushion stroke
32	12	M10x1.25	30	18.5	18	22	4	G1/8	51	119	5.5	170	5	27	16	M6	5	32.5	47	10	6	17	17
40	16	M12x1.25	35	19	21	24	4	G1/4	55	130	5.5	185	5	30	16	M6	5	38	55	13	6	19	18
50	20	M16x1.5	40	19.5	25	32	4	G1/4	62	131	6	193	6	30.5	16	M8	8	46.5	65	17	8	24	20
63	20	M16x1.5	45	24	26	32	4	G3/8	62	146	6	208	6	37.5	16	M8	8	56.5	75	17	8	24	22
80	25	M20x1.5	45	23.5	30	40	4	G3/8	71	153	0	224	0	37	19	M10	8	72	93	22	6	30	25
100	25	M20x1.5	55	24	35	40	4	G1/2	76	163	0	239	0	39.5	19.5	M10	8	89	110	22	6	30	26
125	35	M27x2	60	28	42	54	6	G1/2	90	185	6	275	6	44	23	M12	10.5	110	135	27	12	41	33

Series 63 cylinders - round tube, single-acting, front spring

Versions: 63MT1...

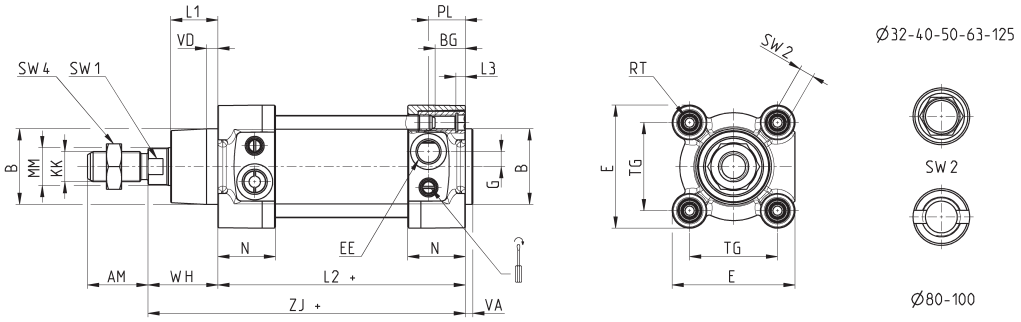

+ = add the stroke

Table note:
* = special key 80-62/8C
(see accessories)

DIMENSIONS																						
Ø	ØMM	KK	ØB	PL	L1	AM	VA	EE	WH	L2+	L3	ZJ+	VD	N	BG	RT	G	TG	E	SW1	SW2	SW4	Front/rear cushion stroke
32	12	M10x1.25	30	18.5	18	22	4	G1/8	26	119	5	145	5	27	16	M6	5	32.5	47	10	6	17	17
40	16	M12x1.25	35	19	21	24	4	G1/4	30	130	5	160	5	30	16	M6	5	38	55	13	6	19	18
50	20	M16x1.5	40	19.5	25	32	4	G1/4	37	131	5	168	6	30.5	16	M8	8	46.5	65	17	8	24	20
63	20	M16x1.5	45	24	26	32	4	G3/8	37	146	5	183	6	37.5	16	M8	8	56.5	75	17	8	24	22
80	25	M20x1.5	45	23.5	30	40	4	G3/8	46	153	0	199	7	37	19	M10	8	72	93	22	*	30	25
100	25	M20x1.5	55	24	35	40	4	G1/2	51	163	0	214	7	39.5	19.5	M10	8	89	110	22	*	30	26
125	32	M27x2	60	28	42	54	6	G1/2	65	185	6	250	8	44	23	M12	10.5	110	135	27	12	41	33

Series 63 cylinders - round tube, single-acting, rear spring

Versions: 63MT9...

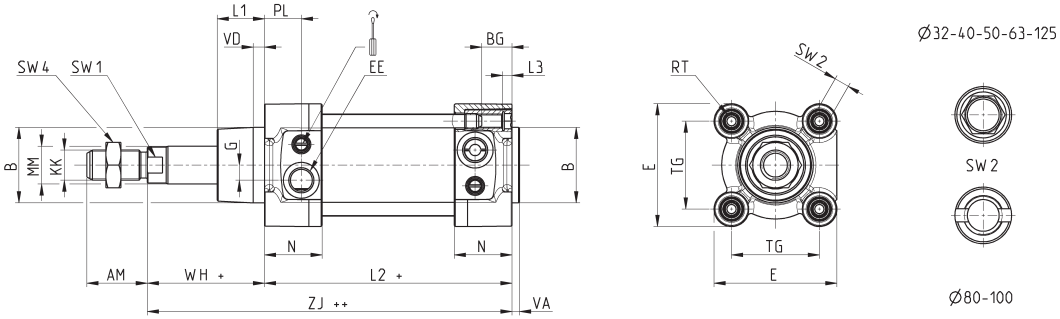

+ = add the stroke

Table note:
* = special key 80-62/8C
(see accessories)

DIMENSIONS																						
Ø	ØMM	KK	ØB	PL	L1	AM	VA	EE	WH+	L2+	L3	ZJ++	VD	N	BG	RT	G	TG	E	SW1	SW2	SW4	Front/rear cushion stroke
32	12	M10x1.25	30	18.5	18	22	4	G1/8	51	119	5	170	5	27	16	M6	5	32.5	47	10	6	17	17
40	16	M12x1.25	35	19	21	24	4	G1/4	55	130	5	185	5	30	16	M6	5	38	55	13	6	19	18
50	20	M16x1.5	40	19.5	25	32	4	G1/4	62	131	5	193	6	30.5	16	M8	8	46.5	65	17	8	24	20
63	20	M16x1.5	45	24	26	32	4	G3/8	62	146	5	208	6	37.5	16	M8	8	56.5	75	17	8	24	22
80	25	M20x1.5	45	23.5	30	40	4	G3/8	71	153	0	224	7	37	19	M10	8	72	93	22	*	30	25
100	25	M20x1.5	55	24	35	40	4	G1/2	76	163	0	239	7	39.5	19.5	M10	8	89	110	22	*	30	26
125	35	M27x2	60	28	42	54	6	G1/2	90	185	6	275	8	44	23	M12	10.5	110	135	27	12	41	33

Series 63 cylinders - profile, through rod

Versions: 63MP6..., 63MP7...
For the single-acting cylinders, the dimensions L2 and ZM have to be increased with 25 mm.

+ = add the stroke
++ = add the stroke twice

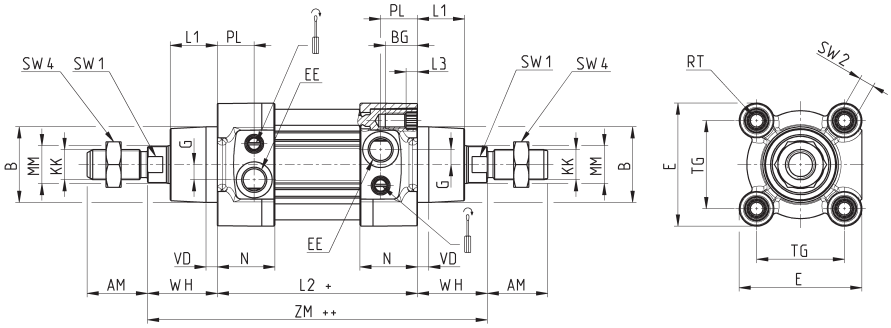

Ø	ØMM	KK	ØB	PL	L1	AM	EE	WH	L2+	L3	ZM++	VD	N	BG	RT	G	TG	E	ØF	SW1	SW2	SW4	Front/rear cushion stroke
32	12	M10x1.25	30	18.5	18	22	G1/8	26	94	5.5	146	5	27	16	M6	5	32.5	47	-	10	6	17	17
40	16	M12x1.25	35	19	21	24	G1/4	30	105	5.5	165	5	30	16	M6	5	38	55	-	13	6	19	18
50	20	M16x1.5	40	19.5	25	32	G1/4	37	106	6	180	6	30.5	16	M8	8	46.5	65	8	17	8	24	20
63	20	M16x1.5	45	24	26	32	G3/8	37	121	6	195	6	37.5	16	M8	8	56.5	75	8	17	8	24	22
80	25	M20x1.5	45	23.5	30	40	G3/8	46	128	7	220	7	37	19	M10	8	72	93	8	22	6	30	25
100	25	M20x1.5	55	24	35	40	G1/2	51	138	7	240	7	39.5	19.5	M10	8	89	110	8	22	6	30	26
125	32	M27x2	60	28	42	54	G1/2	65	160	8	290	8	44	23	M12	10.5	110	135	-	27	12	41	33

Series 63 cylinders - round tube, through rod

Versions: 63MT6..., 63MT7...
For the single-acting cylinders, the dimensions L2 and ZM have to be increased with 25 mm.

+ = add the stroke
++ = add the stroke twice

Table note:
* = special key 80-62/8C
(see accessories)

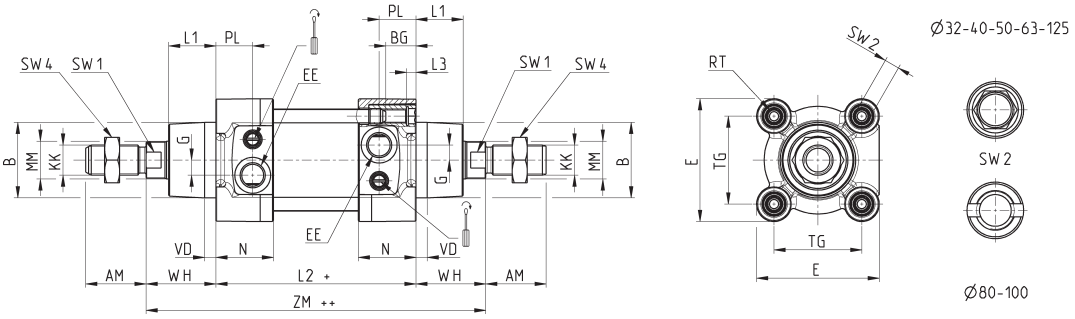

Ø	ØMM	KK	ØB	PL	L1	AM	EE	WH	L2+	L3	ZM++	VD	N	BG	RT	G	TG	E	ØF	SW1	SW2	SW4	Front/rear cushion stroke
32	12	M10x1.25	30	18.5	18	22	G1/8	26	94	5	146	5	27	16	M6	5	32.5	47	-	10	6	17	17
40	16	M10x1.25	35	19	21	24	G1/4	30	105	5	165	5	30	16	M6	5	38	55	-	13	6	19	18
50	20	M16x1.5	40	19.5	25	32	G1/4	37	106	5	180	6	30.5	16	M8	8	46.5	65	8	17	8	24	20
63	20	M16x1.5	45	24	26	32	G3/8	37	121	5	195	6	37.5	16	M8	8	56.5	75	8	17	8	24	22
80	25	M20x1.5	45	23.5	30	40	G3/8	46	128	0	220	7	37	19	M10	8	72	93	8	22	*	30	25
100	25	M20x1.5	55	24	35	40	G1/2	51	138	0	240	7	39.5	19.5	M10	8	89	110	8	22	*	30	26
125	32	M27x2	60	28	42	54	G1/2	65	160	6	290	8	44	23	M12	10.5	110	135	-	27	12	41	33

Series 63 cylinders with rod lock

+ = add the stroke

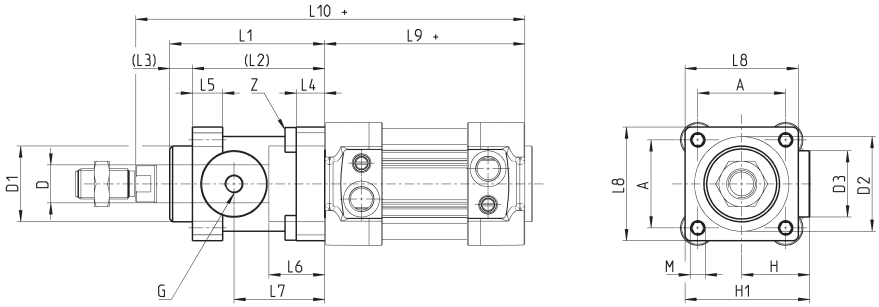

DIMENSIONS																				
Ø	øD	øD1	øD2	øD3	A	G	H	H1	L1	L2	L3	L4	L5	L6	L7	L8	L9+	L10+	M	Z
32	12	30.5	35	25	32.5	M5	25.5	46.5	58	48	10	8	13	20.5	34	45	94	160	M6	M6X20
40	16	35	40	28	38	G1/8	30	53	65	55	10	8	13	22.5	38	50	105	178	M6	M6X20
50	20	40	50	35	46.5	G1/8	36	64	82	70	12	15	16	29.5	48	60	106	200	M8	M6X20
63	20	45	60	38	56.5	G1/8	40	75	82	70	12	15	16	29.5	49.5	70	121	215	M8	M8X30
80	25	45	80	48	72	G1/8	50	95	110	90	20	18	20	35	61	90	128	254	M10	M10X35
100	25	55	100	58	89	G1/8	58	110.5	115	100	15	18	20	39	69	105	138	269	M10	M10X35
125	32	60	130	65	110	G1/8	80	150	167	122	45	22	30	51	86.5	140	160	350	M12	M12X40

Series 63 cylinders with female rod thread

New version

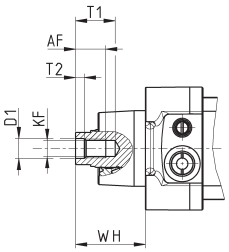

Ø	AF Min	KF	D1 Ø	T1 Max	T2	WH
32	12	M6X1	6.4	16	2.6	26
40	12	M8X1.25	8.4	16	3.3	30
50	16	M10X1.5	10.5	21	4.7	37
63	16	M10X1.5	10.5	21	4.7	37
80	20	M12X1.75	13	26.5	6.1	46
100	20	M12X1.75	13	26.5	6.1	54
125	32	M16X2	17	40	8	65

Series 63 cylinders - round tube, tandem version

New version

+ = add the stroke
++ = add the stroke twice

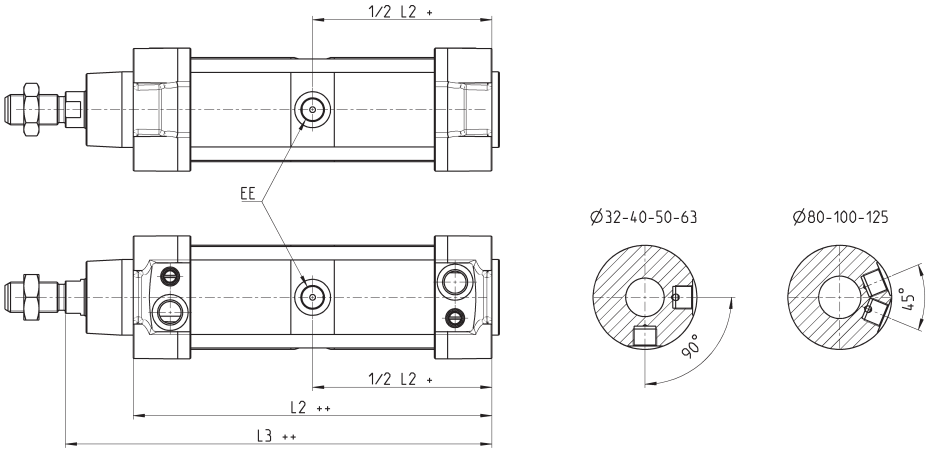

Ø	EE	L2 ++	L3 ++
32	G1/8	171.5	197.5
40	G1/4	191.5	221.5
50	G1/4	188	225
63	G3/8	204	241
80	G3/8	225.5	271.5
100	G1/2	231	282
125	G1/2	264	329

Series 63 cylinders - profile, tandem version

New version

+ = add the stroke
++ = add the stroke twice

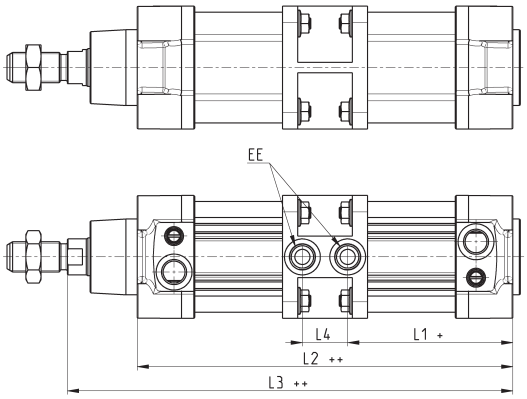

Ø	EE	L1+	L2++	L3++	L4
32	G1/8	76.5	171.5	197.5	18.5
40	G1/4	88.5	200	230	23
50	G1/4	87.5	199	236	24
63	G3/8	98	223	260	27
80	G3/8	104.5	236	282	27
100	G1/2	116	260	311	28
125	G1/2	132	264	329	0

Series 63 cylinders - round tube, multi-position version

New version

X1 = partial stroke
X2 = total stroke

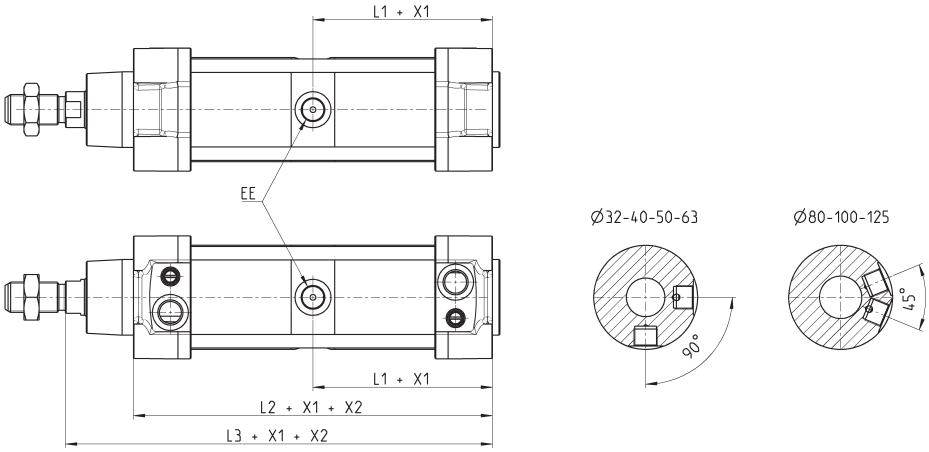

Ø	EE	L1	L2	L3
32	G1/8	86	171.5	197.5
40	G1/4	96	191.5	221.5
50	G1/4	94	188	225
63	G3/8	102	204	241
80	G3/8	113	225.5	271.5
100	G1/2	115.5	231	282
125	G1/2	132	264	329

Series 63 cylinders - profile, multi-position version

New version

X1 = partial stroke
X2 = total stroke

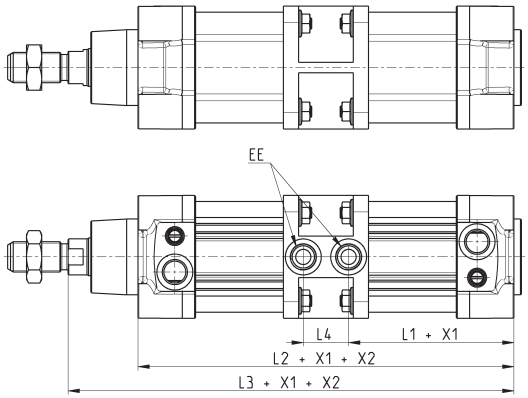

Ø	EE	L1+	L2++	L3++	L4
32	G1/8	76.5	171.5	197.5	18.5
40	G1/4	88.5	200	230	23
50	G1/4	87.5	199	236	24
63	G3/8	98	223	260	27
80	G3/8	104.5	236	282	27
100	G1/2	116	260	311	28
125	G1/2	132	264	329	0

Series 63 cylinders with protective bellow

New version

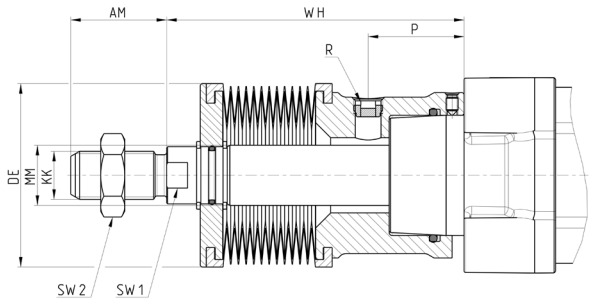

Ø	Stroke	WH	AM	KK	MM	P	R	DE	SW1	SW2
32	0 ÷ 245	88	22	M10X1.25	12	25	G1/8	61	10	17
32	246 ÷ 490	132	22	M10X1.25	12	25	G1/8	61	10	17
40	0 ÷ 245	89	24	M12X1.25	16	26	G1/8	61	13	19
40	246 ÷ 490	133	24	M12X1.25	16	26	G1/8	61	13	19
50	0 ÷ 245	99	32	M16X1.5	20	30	G1/8	61	17	24
50	246 ÷ 490	143	32	M16X1.5	20	30	G1/8	61	17	24
63	0 ÷ 245	76	32	M16X1.5	20	16.5	G1/8	61	17	24
63	246 ÷ 490	120	32	M16X1.5	20	16.5	G1/8	61	17	24
80	0 ÷ 285	86	40	M20X1.5	25	11.5	G1/8	83	22	30
80	286 ÷ 570	139	40	M20X1.5	25	11.5	G1/8	83	22	30
100	0 ÷ 285	86	40	M20X1.5	25	12	G1/8	83	22	30
100	286 ÷ 570	139	40	M20X1.5	25	12	G1/8	83	22	30
125	0 ÷ 285	108	54	M27X2	32	30	G1/8	83	29	41
125	286 ÷ 570	161	54	M27X2	32	30	G1/8	83	29	41

Series 63 cylinders - round tube, back to back (TR)

New version

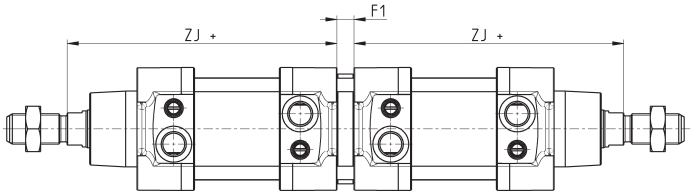

Ø	F1	ZJ+	max overall stroke (mm)
32	9	120	500
40	9	135	800
50	9	143	800
63	9	158	700
80	9	174	1000
100	9	189	900
125	20	225	1000

Opposed cylinder coupler Mod. DC-63

Material: Aluminium

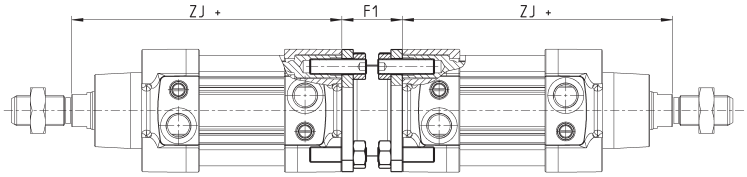

Supplied with:
1x flange
8x locking screws
8x nuts

+ = add the stroke

DIMENSIONS						
Mod.	Ø	F1	ZJ+	weight (g)	max overall stroke (mm)	torque force
DC-63-32	32	27	120	130	500	5 Nm
DC-63-40	40	27	135	160	800	5 Nm
DC-63-50	50	32	143	285	800	10 Nm
DC-63-63	63	28	158	340	700	10 Nm
DC-63-80	80	38	174	670	1000	15 Nm
DC-63-100	100	38	189	820	900	15 Nm
DC-63-125	125	48	225	1300	1000	20 Nm

Foot mount Mod. B-41

Material: zinc-plated steel

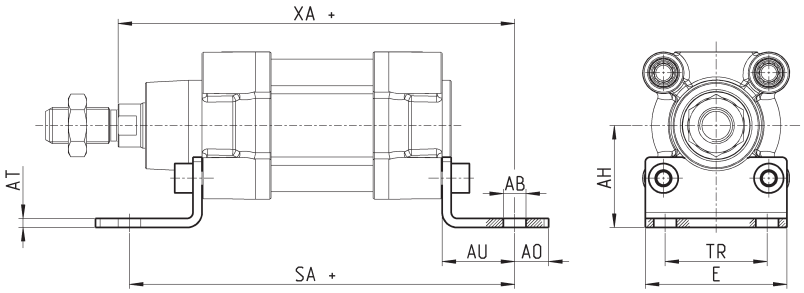

Supplied with:
2x feet
4x screws

+ = add the stroke

DIMENSIONS											
Mod.	Ø	AT	SA+	XA+	TR	E	AB	AH	AO	AU	torque force
B-41-32	32	4	142	144	32	45	7	32	11	24	5 Nm
B-41-40	40	4	161	163	36	53,5	10	36	15	28	5 Nm
B-41-50	50	4	170	175	45	62,5	10	45	15	32	10 Nm
B-41-63	63	5	185	190	50	73	10	50	15	32	10 Nm
B-41-80	80	6	210	216	63	92	12	63	20	41	15 Nm
B-41-100	100	6	220	230	75	108,5	14,5	71	25	41	15 Nm
B-41-125	125	7	250	270	90	132	16,5	90	25	45	20 Nm

Front and rear flange Mod. D-E

Material: Aluminium

Supplied with:
1x flange
4x screws

+ = add the stroke

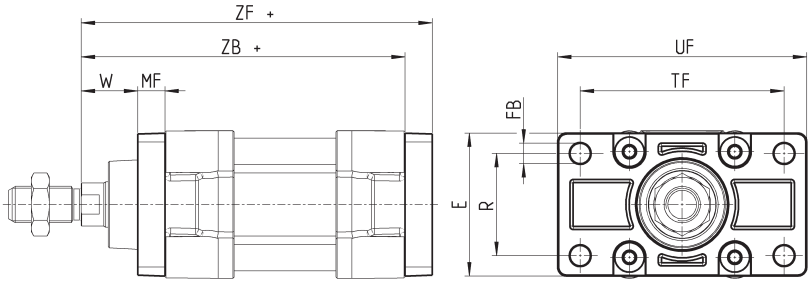

Mod.	Ø	W	MF	ZB	TF	R	UF	E	FB	ZF	torque force
D-E-41-32	32	16	10	120	64	32	80	45	7	130	5 Nm
D-E-41-40	40	20	10	135	72	36	90	52	9	145	5 Nm
D-E-41-50	50	25	12	143	90	45	110	65	9	155	10 Nm
D-E-41-63	63	25	12	158	100	50	120	75	9	170	10 Nm
D-E-41-80	80	30	16	174	126	63	148	95	12	190	15 Nm
D-E-41-100	100	35	16	189	150	75	176	115	14	205	15 Nm
D-E-41-125	125	45	20	225	180	90	220	140	16	245	20 Nm

Rear female trunnion Mod. C and C-H

Material: Aluminium

Supplied with:
1x female trunnion
4x screws

+ = add the stroke

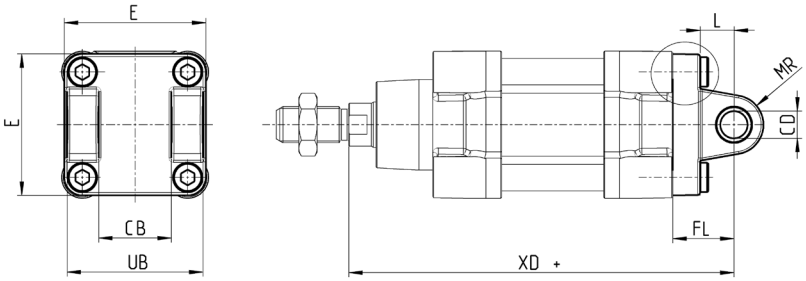

Ø 32

Mod.	Ø	CD	L	FL	XD	MR	E	CB	UB	torque force
C-41-32	32	10	12.5	22	142	10	47	26	46.5	5 Nm
C-41-40	40	12	16	25	160	12	52	28	52	5 Nm
C-41-50	50	12	16	27	170	12	64	32	60	10 Nm
C-H-41-63	63	16	21	32	190	16	74	40	70	10 Nm
C-H-41-80	80	16	22	36	210	16	93	50	90	15 Nm
C-H-41-100	100	20	27	41	230	20	114	60	110	15 Nm
C-H-41-125	125	25	30	50	275	25	140	70	130	20 Nm

Front female trunnion Mod. H and C-H

Material: Aluminium

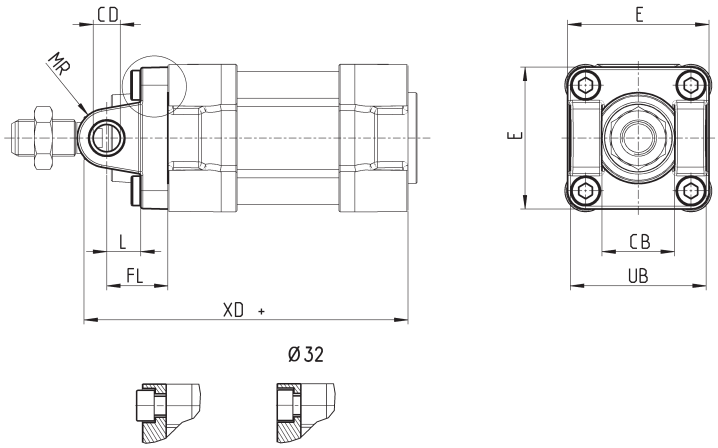

Supplied with:
1x female trunnion
4x screws

+ = add the stroke

Mod.	Ø	CB	UB	E	XD+	FL	L	CD	MR	torque force
H-41-32	32	26	46.5	47	120	22	12.5	10	10	5 Nm
H-41-40	40	28	52	52	135	25	16	12	12	5 Nm
H-41-50	50	32	60	64	143	27	16	12	12	10 Nm
H-60-63	63	40	70	74	158	32	21	16	16	10 Nm
C-H-41-80	80	50	90	94	174	36	22	16	16	15 Nm
C-H-41-100	100	60	110	114	189	41	27	20	20	15 Nm
C-H-41-125	125	70	130	140	225	50	30	25	25	20 Nm

Rear male trunnion Mod. L

Material: Aluminium

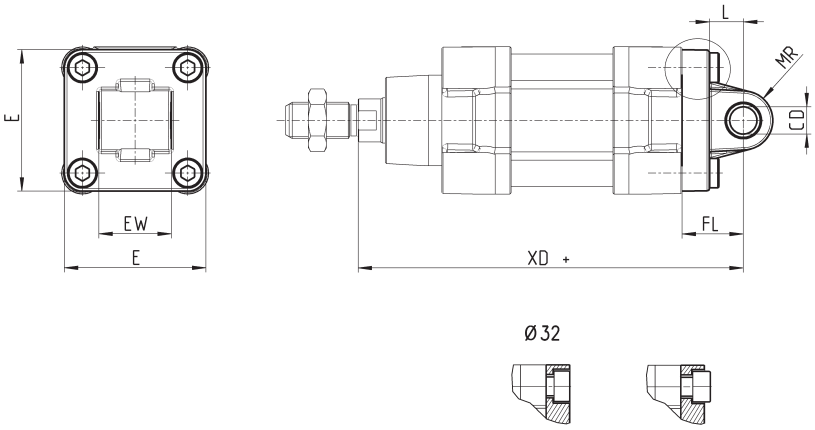

Supplied with:
1x male trunnion
4x screws

+ = add the stroke

DIMENSIONS									
Mod.	Ø	CD	L	FL	XD	MR	E	EW	torque force
L-41-32	32	10	12.5	22	142	10	47	26	5 Nm
L-41-40	40	12	16	25	160	12	52	28	5 Nm
L-41-50	50	12	16	27	170	12	64	32	10 Nm
L-41-63	63	16	21	32	190	15.5	74	40	10 Nm
L-41-80	80	16	22	36	210	16	94	50	15 Nm
L-41-100	100	20	27	41	230	20	114	60	15 Nm
L-41-125	125	25	30	50	275	25	140	70	20 Nm

Front/rear spot faced trunnion Mod. FN

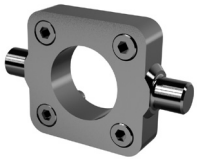

Material: zinc-plated steel

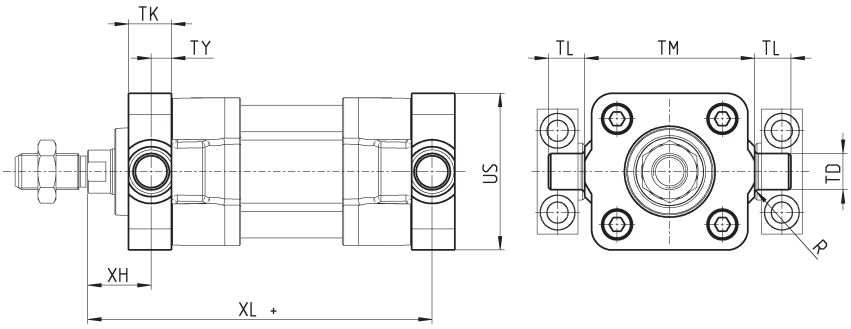

Supplied with:
1x centre spot faced trunnion
4x screws

+ = add the stroke

DIMENSIONS											
Mod.	Ø	TK	TY	XH	XL+	US	TL	TM	TD	R	torque force
FN-32	32	14	6.5	19.5	126.5	46	12	50	12	1	5 Nm
FN-40	40	19	9	21	144	59	16	63	16	1.5	5 Nm
FN-50	50	19	9	28	152	69	16	75	16	1.6	10 Nm
FN-63	63	24	11.5	25.5	169.5	84	20	90	20	1.6	10 Nm
FN-80	80	24	11.5	34.5	185.5	102	20	110	20	1.6	15 Nm
FN-100	100	29	14	37	203	125	25	132	25	2	15 Nm
FN-125	125	30	15	50	240	150	25	160	25	2	20 Nm

Trunnion ball-joint Mod. R

* This trunnion doesn't comply with the ISO 15552 standard
Material: Aluminium

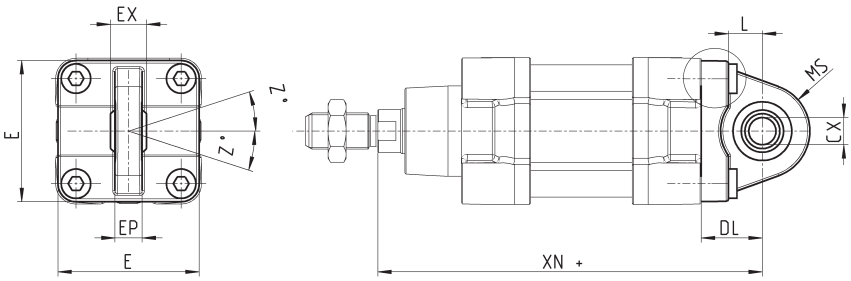

Supplied with:
1x trunnion ball joint
4x screws

+ = add the stroke

R-41-50/80/125

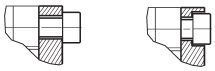

Mod.	Ø	ø CX	L	DL+	XN+	MS	E	EX	EP	Z	torque force
R-41-32	32	10	13	22	142	16	45	14	10.5	4	5 Nm
R-41-40	40	12	16	25	160	19	52	16	12	4	5 Nm
R-41-50*	50	12	15	27	170	21	62.5	16	12	4	10 Nm
R-50	50	16	16	27	170	21,5	65	21	15	4	10 Nm
R-41-63	63	16	21	32	190	24	75	21	15	4	10 Nm
R-41-80*	80	16	24	36	210	28	92	21	15	4	15 Nm
R-80	80	20	22	36	210	28,5	95	25	18	4	15 Nm
R-41-100	100	20	27	41	230	30	115	25	18	4	15 Nm
R-41-125	125	30	30	50	275	40	140	37	25	4	20 Nm

Centre trunnion Mod. F for round tube cylinders

Material: zinc-plated steel

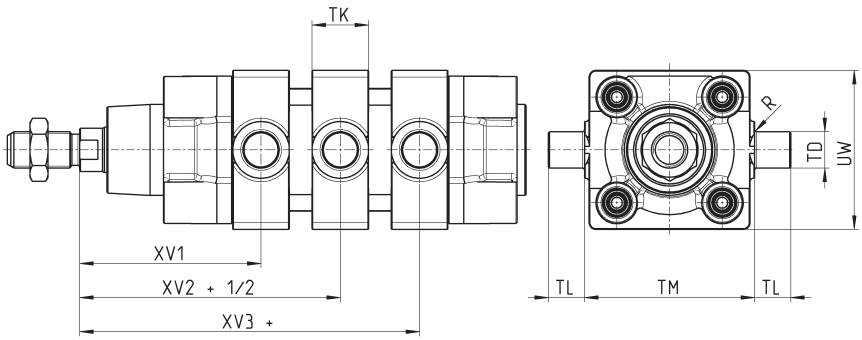

Supplied with:
1x intermediate trunnion
8x locking screws

+ = add the stroke

DIMENSIONS										
Mod.	Ø	XV1	XV2+	XV3+	TM (h14)	TK	TD (e9)	TL	UW	R
F-32	32	63	73	83	50	20	12	12	50	0.5
F-40	40	70	82.5	95	63	20	16	16	60	1
F-50	50	80	90	100	75	25	16	16	70	1
F-63	63	87	97.5	108	90	25	20	20	85	1
F-80	80	98	110	122	110	30	20	20	105	1
F-100	100	105.5	120	134.5	132	30	25	25	125	1.5
F-125	125	124	145	166	160	30	25	25	155	1.5

Centre trunnion Mod. F for profile cylinders

Material: zinc-plated steel

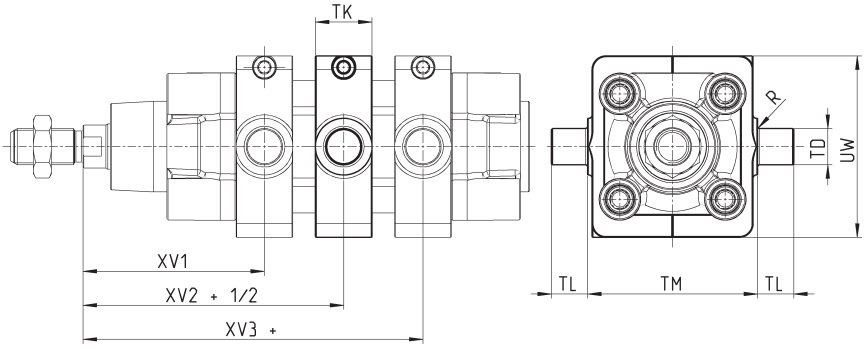

Supplied with:
1x centre trunnion
8x locking screws
2x fixing screws

+ = add the stroke

DIMENSIONS										
Mod.	Ø	XV1	XV2+	XV3+	TM	TK	TD	TL	UW	R
F-63-32	32	63	73	83	50	20	12	12	62	0.5
F-63-40	40	70	82.5	95	63	20	16	16	70	1
F-63-50	50	80	90	100	75	25	16	16	80	1
F-63-63	63	87	97.5	108	90	25	20	20	90	1
F-63-80	80	98	110	122	110	30	20	20	115	1
F-63-100	100	105.5	120	134.5	132	30	25	25	135	1.5
F-63-125	125	124	145	166	160	30	25	25	162	1.5

Accessory combination Mod. C+L+S

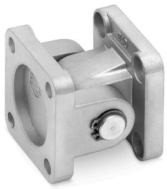

Material: Aluminium

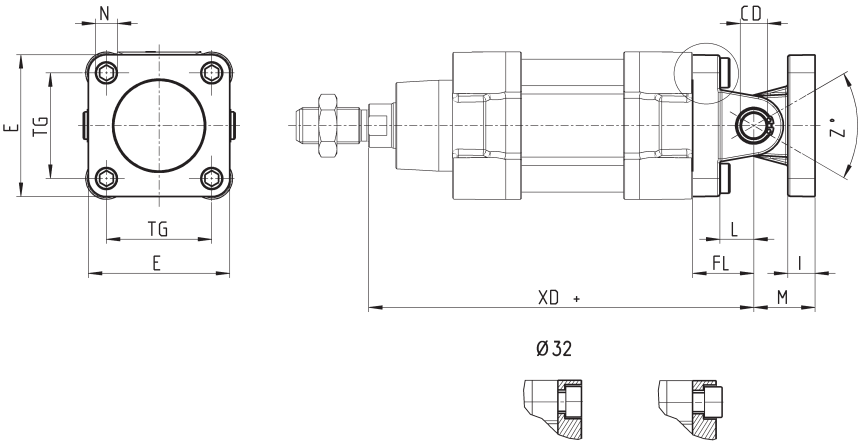

+ = add the stroke

DIMENSIONS												
Mod.	Ø	E	TG	øN	XD+	øCD	L	FL	I	M	Z° (max)	torque force
C+L+S	32	47	32.5	6.5	142	10	12.5	22	9.5	22	30	5 Nm
C+L+S	40	52	38	6.5	160	12	16	25	9	25	40	5 Nm
C+L+S	50	64	46.5	9	170	12	16	27	11	27	25	10 Nm
C+L+S	63	74	56.5	9	190	16	21	32	11	32	36	10 Nm
C+L+S	80	94	72	11	210	16	22	36	14	36	34	15 Nm
C+L+S	100	114	89	11	230	20	27	41	14	41	38	15 Nm
C+L+S	125	140	110	13	275	25	30	50	20	50	30	20 Nm

90° male trunnion Mod. ZC

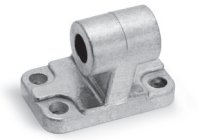

CETOP RP 107P
Material: Aluminium

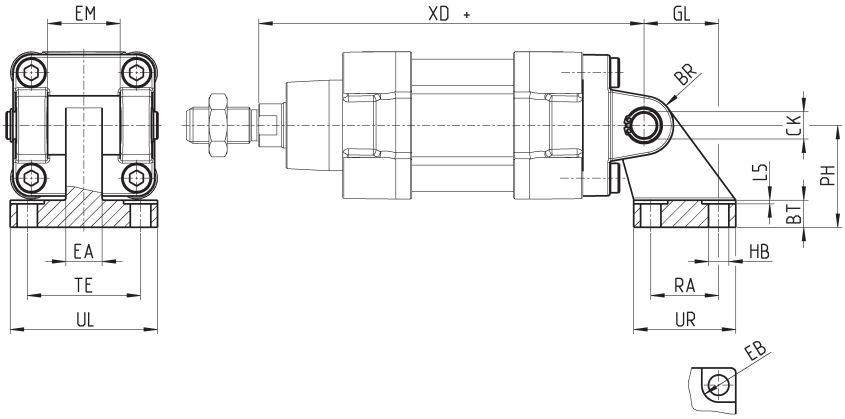

Supplied with:
1x male support

+ = add the stroke

DIMENSIONS																
Mod.	Ø	EB	CK	HB	XD+	TE	UL	EA	GL	L5	RA	EM	UR	PH	BT	BR
ZC-32	32	11	10	6,6	142	38	51	10	21	1,6	18	26	31	32	8	10
ZC-40	40	11	12	6,6	160	41	54	15	24	1,6	22	28	35	36	10	11
ZC-50	50	15	12	9	170	50	65	16	33	1,6	30	32	45	45	12	13
ZC-63	63	15	16	9	190	52	67	16	37	1,6	35	40	50	50	14	15
ZC-80	80	18	16	11	210	66	86	20	47	2,5	40	50	60	63	14	15
ZC-100	100	18	20	11	230	76	96	20	55	2,5	50	60	70	71	17	19
ZC-125	125	20	25	14	275	94	124	30	70	3,2	60	70	90	90	20	22,5

Counter bracket for centre trunnion Mod. BF

Material: Aluminium

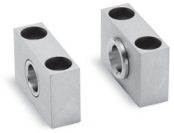

Supplied with:
2x supports

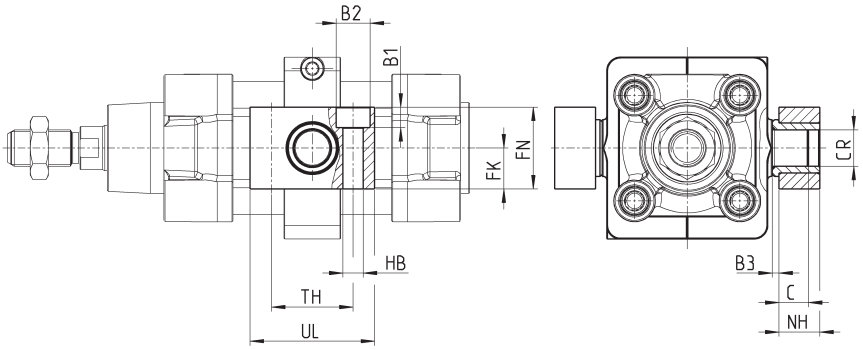

Mod.	Ø	øCR	NH	C	B3	TH	UL	FK	FN	B1	B2	HB
BF-32	32	12	15	7,5	3	32	46	15	30	6,8	11	6,6
BF-40-50	40 - 50	16	18	9	3	36	55	18	36	9	15	9
BF-63-80	63 - 80	20	20	10	3	42	65	20	40	11	18	11
BF-100-125	100 - 125	25	25	12,5	3,5	50	75	25	50	13	20	14

Accessory to mount valves on the cylinder

The mounting sub-base Mod. PCV enables the valve or solenoid valve to be mounted directly on the cylinder, thus forming a compact unit to apply.

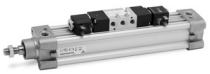

Make sure that the WW dimension of the valve to be mounted is smaller than the JJ cylinder dimension.
Further information on http://catalogue.camozzi.com/downloads.

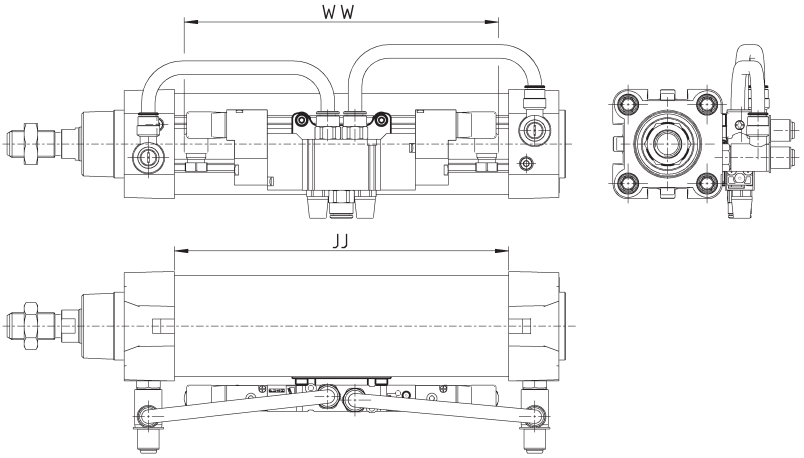

Mod.	
PCV-62-K3	to connect valves - solenoid valves Series 3
PCV-62-K4	to connect valves - solenoid valves Series 4 port G1/4
PCV-62-KEN	to connect valves - solenoid valves Series EN
PCV-62-K8	to connect valves - solenoid valves Series 4 port G1/8 and Series 3 port G1/4

Clevis pin Mod. S

Supplied with:
1x centering pin in stainless steel 303
2x seeger in steel

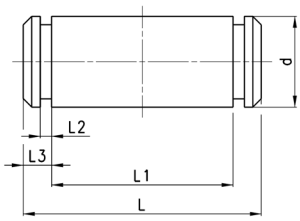

DIMENSIONS						
Mod.	Ø	d	L	L1	L2	L3
S-32	32	10	52	46	1.1	3
S-40	40	12	59	53	1.1	3
S-50	50	12	67	61	1.1	3
S-63	63	16	77	71	1.1	3
S-80	80	16	97	91	1.1	3
S-100	100	20	121	111	1.3	5
S-125	125	25	140.5	132	1.3	4.25

Swivel ball joint Mod. GA

ISO 8139.
Material: zinc-plated steel.

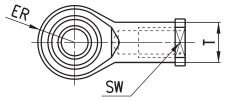

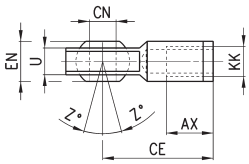

Mod.	øCN(H7)	U	EN	ER	AX	CE	KK	øT	Z	SW
GA-32	10	10,5	14	14	20	43	M10X1,25	15	6,5	17
GA-40	12	12	16	16	22	50	M12X1,25	17,5	6,5	19
GA-50-63	16	15	21	21	28	64	M16X1,5	22	7,5	22
GA-80-100	20	18	25	25	33	77	M20x1,5	27,5	7	30
GA-41-125	30	25	37	37	51	110	M27x2	40	7,5	41

Piston rod socket joint Mod. GY

Material: zama and zinc-plated steel.

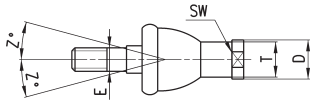

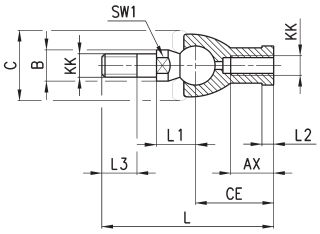

DIMENSIONS																
Mod.	Ø	KK	L	CE	L2	AX	SW	SW1	L1	L3	øT	øD	E	øB	øC	Z
GY-32	32	M10X1,25	74	35	6,5	18	17	11	19,5	15	15	19	10	14	28	15
GY-40	40	M12X1,25	84	40	6,5	20	19	17	21	17	17,5	22	12	19	32	15
GY-50-63	50-63	M16X1,5	112	50	8	27	22	19	27,5	23	22	27	16	22	40	11
GY-80-100	80-100	M20x1,5	133	63	10	38	30	24	31,5	25	27,5	34	20	27	45	7,5

Rod fork end Mod. G

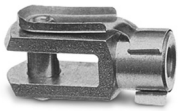

ISO 8140
Material: zinc-plated steel

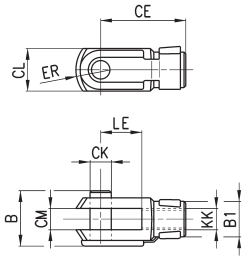

Mod.	øCK	LE	CM	CL	ER	CE	KK	B	øB1
G-25-32	10	20	10	20	12	40	M10 X 1,25	26	18
G-40	12	24	12	24	14	48	M12 X 1,25	32	20
G-50-63	16	32	16	32	19	64	M16 X 1,5	40	26
G-80-100	20	40	20	40	25	80	M20 X 1,5	48	34
G-41-125	30	54	30	55	38	110	M27 X 2	74	48

Piston rod lock nut Mod. U

ISO 4035
Material: zinc-plated steel.

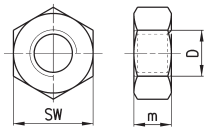

Mod.	D	m	SW
U-25-32	M10X1,25	6	17
U-40	M12X1,25	7	19
U-50-63	M16X1,5	8	24
U-80-100	M20x1,5	9	30
U-41-125	M27x2	12	41

Self aligning rod Mod. GK

Material: zinc-plated steel.

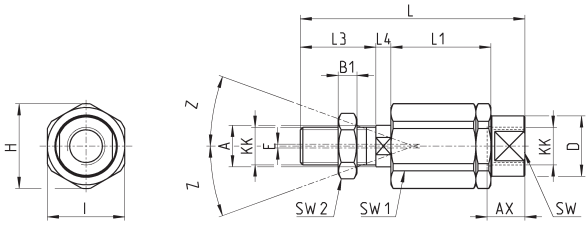

DIMENSIONS																	
Mod.	Ø	KK	L	L1	L3	L4	øA	øD	H	I	SW	SW1	SW2	B1	AX	Z	E
GK-25-32	25-32	M10x1,25	71,5	35	20	7,5	14	22	32	30	19	12	17	5	22	4	2
GK-40	40	M12x1,25	75,5	35	24	7,5	14	22	32	30	19	12	19	6	22	4	2
GK-50-63	50-63	M16x1,5	104	53	32	10	22	32	45	41	27	20	24	8	30	3	2
GK-80-100	80-100	M20x1,5	119	53	40	10	22	32	45	41	27	20	30	10	37	3	2
GK-125	125	M27x2	147	60	54	10	32	57	70	65	54	24	41	12	48	4	2

Coupling piece Mod. GKF

Material: zinc-plated steel.

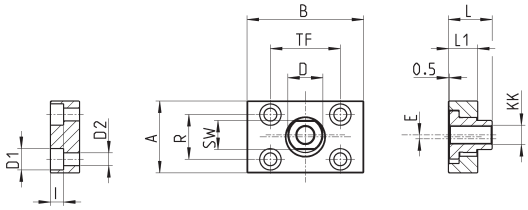

DIMENSIONS														
Mod.	Ø	KK	A	B	R	TF	L	L1	I	Ø D	Ø D1	Ø D2	SW	E
GKF-25-32	32	M10x1,25	37	60	23	36	22,5	15	6,8	18	11	6,6	15	2
GKF-40	40	M12x1,25	56	60	38	42	22,5	15	9	20	15	9	15	2,5
GKF-50-63	50-63	M16x1,5	80	80	58	58	26,5	15	10,5	25	18	11	22	2,5
GKF-80-100	80-100	M20x1,5	90	90	65	65	32,5	20	13	30,5	20	14	27	2,5
GKF-125	125	M27x2	90	90	65	65	35,5	20	13	40	20	14	36	4

Special key to disassemble cylinders Ø 80-100, round tube

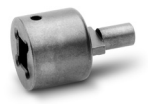

Material: hardened steel

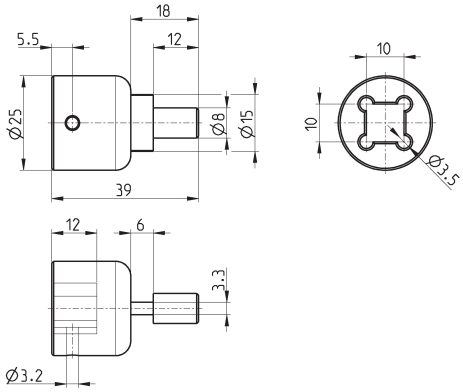

Mod.
80-62/8C

END LOCK cylinders Series 63

New

Double-acting, magnetic, cushioned
ø 32, 40, 50, 63, 80, 100, 125 mm

- Robust design
- ISO 15552 compliant
- High reliability
- Locking force greater than thrust force of cylinder (6bar)
- Automatic mechanical end-stroke lock in three versions : front; rear; front & rear
- Automatic unlocking without any pilot inputs
- Manual unlocking function
- Ability to deactivate the locking function (during machine set-up phase)

END LOCK pneumatic cylinders are fitted with automatic mechanical end stroke locks which guarantee safe and secure holding of the cylinder rod in both the fully retracted and fully extended positions. The locks activate and release automatically, without the need for external signals or commands and cylinder END LOCK Series 63 comply with ISO 15552.

The automatic mechanical lock therefore makes the END LOCK cylinders Series 63 highly suitable for use in sectors and for applications where it is essential to lock the cylinder's position, both to avoid sliding during long stops and in situations with an absence of air, for example in transportation, printing & paper and the woodworking industry.
In addition, their capability to withstand external forces, that are much higher than the force exerted by the piston, makes the END LOCK cylinder the ideal solution for applications such as lifters, positioners and presses where a greater degree of safety is required compared to the more traditional rod locks combined with blocking valves.

VERSIONS AVAILABLE:

- High and low temperatures
- Corrosion-resistant
- Dirty and dusty environments
- Protective bellows
- ATEX

GENERAL DATA

Type of construction	profile (with screws)
Design	ISO 15552
Operation	double-acting
Type of mounting	with front / rear flange, foot mounting, with front / rear / centre / swivel trunnion
Stroke min - max	10 ÷ 2500 mm
Operating temperature	standard: 0°C ÷ 80°C (with dry air -20°C) high temperatures (version W): 0°C ÷ 150°C (with dry air -20°C) low temperatures (version Z): -40°C ÷ 60°C (with dry air -40°C) low temperatures (version Y): -50°C ÷ 60°C (with dry air -50°C)
Storage temperature	0°C ÷ 80°C (with dry air -20°C)
Operating pressure	2 ÷ 10 bar (standard, high and low temperatures)
Fluid	filtered air in class 7.8.4, according to ISO 8573-1. If lubricated air is used, it is recommended to use oil ISOVG32. Once applied the lubrication should never be interrupted.
Use with sensors	model CSH

End Lock system features

	Ø32	Ø40	Ø50	Ø63	Ø80	Ø100	Ø125
Static Holding Force** [N]	1000	1000	3000	3000	5500	5500	5500
Axial backlash of locking system [mm]	< 0,15	< 0,15	< 0,15	< 0,15	< 0,15	< 0,15	< 0,15
Minimum unlocking pressure [bar]	2	2	2	2	2	2	2

** maximum applicable load in continuous operation, higher loads may cause permanent deformations to the locking system

STANDARD STROKES FOR END LOCK CYLINDERS SERIES 63

× = Double-acting (standard, high/low temperatures) Other strokes up to 2500 mm are available on request.

STANDARD STROKES														
Ø	25	50	75	80	100	125	150	160	200	250	300	320	400	500
32	×	×	×	×	×	×	×	×	×	×	×	×	×	×
40	×	×	×	×	×	×	×	×	×	×	×	×	×	×
50	×	×	×	×	×	×	×	×	×	×	×	×	×	×
63	×	×	×	×	×	×	×	×	×	×	×	×	×	×
80	×	×	×	×	×	×	×	×	×	×	×	×	×	×
100		×	×	×	×	×	×	×	×	×	×	×	×	×
125		×	×	×	×	×	×	×	×	×	×	×	×	×

CODING EXAMPLE

63	M	P	2	C	050	A	0400	FL	W				

63	SERIES	
M	VERSION: M = standard, magnetic	
P	CONSTRUCTION: P = profile	
2	OPERATION: 2 = double-acting	
C	CUSHIONING: C = cushioning on both sides	
050	BORE: 032 = 32 mm 040 = 40 mm 050 = 50 mm	063 = 63 mm 080 = 80 mm 100 = 100 mm 125 = 125 mm
A	CONSTRUCTION: A = standard with rod nut DC = back to back cylinder with DC accessory [X1/X2]	F = cylinder with centre trunnion
0400	STROKE: = standard	
FL	CONSTRUCTIVE TYPE: FL = Front lock BL = Rear lock DL = front & rear lock	PNEUMATIC SYMBOLS CD34 CD35 CD36
	TEMPERATURE RANGE*: = standard (-20°/+80°) W = high temperatures (150°C)	Z = low temperatures (-40°C) Y = low temperatures (-50°C)
	CORROSION RESISTANCE*: = standard C2 = treated end cap screws (profile) or AISI 303 tie-rod nuts and AISI 420B tie-rods (Ø 125) C3 = C2 + AISI 316 rod nut, AISI 316 rod	C5 = C3 + end caps END LOCK with triple protection (only for constructive type FL and BL)
	TYPE OF MANUAL UNLOCKING = manual with M3 screw (not supplied) T = manual with unhooking pin and protective cover	
	ROD VARIATIONS: = standard (male rod thread) K = end caps without END LOCK with Kanigen treatment (only for lock type FL and BL, only for corrosion resistance category C2 and C3) V = FKM rod seal R = NBR rod seal	G = dusty and dirty environments (with metal scraper and chrome-plated AISI 420B rod) B = cylinder with NBR bellow rod protection (___) = extended rod___ mm
	CERTIFICATIONS: = standard EX = ATEX	

* See material's table for more details

PNEUMATIC SYMBOLS

The pneumatic symbols indicated in the CODING EXAMPLE are shown below.

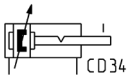

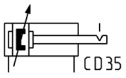

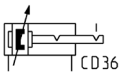

MATERIALS

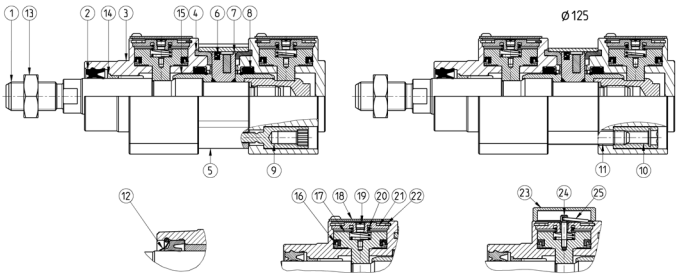

LIST OF COMPONENTS	standard manual release	standard manual release "T"	Rod scraper (G)	Low temperatures (Z/Y)	High temperatures (W)	Resistance to corrosion (C2)	Resistance to corrosion (C3)	Resistance to corrosion (C5)
PARTS								
1 - Rod	AISI 420B	AISI 420B	Chrome-plated AISI 420B	Chrome-plated AISI 420B	AISI 420B	AISI 420B	AISI 316	AISI 316
2 - Rod seal	PU	PU	NBR	PU for -40°C/-50°C	FKM	PU	PU	PU
3 - END LOCK end-cap	Anodized aluminium	Anodized aluminium	Anodized aluminium	Anodized aluminium	Anodized aluminium	Anodized aluminium	Anodized aluminium	Anodized aluminium
3bis - End-cap without END LOCK	Aluminium	Aluminium	Aluminium	Aluminium	Aluminium	Aluminium	Aluminium	
4 - Counterbore seal	NBR	NBR	NBR	NBR for -40°C/-50°C	FKM	NBR	NBR	NBR
5 - Extruded profile	Anodized aluminium	Anodized aluminium	Anodized aluminium	Anodized aluminium	Anodized aluminium	Anodized aluminium	Anodized aluminium	Anodized aluminium
6 - Piston seal	NBR	NBR	NBR	NBR for -40°C/-50°C	FKM	NBR	NBR	NBR
7 - Piston	Aluminium	Aluminium	Aluminium	Aluminium	Aluminium	Aluminium	Aluminium	Aluminium
8 - Cushion seal	PU	PU	PU	PU for -40°C/-50°C	FKM	PU	PU	PU
9 - Self-tapping screw	Zinc-plated steel	Zinc-plated steel	Zinc-plated steel	Zinc-plated steel	Zinc-plated steel	Coated steel	Coated steel	Coated steel
10 - Tie-rod (Ø125)	Zinc-plated steel	Zinc-plated steel	Zinc-plated steel	AISI 303	Zinc-plated steel	AISI 303	AISI 303	AISI 303
11 - Tie-rod (Ø125)	Zinc-plated steel	Zinc-plated steel	Zinc-plated steel	AISI 420B	Zinc-plated steel	AISI 420B	AISI 420B	AISI 420B
12 - Rod scraper	-	-	Brass	Brass	-	-	-	-
13 - Rod nut	Zinc-plated steel	Zinc-plated steel	Zinc-plated steel	AISI 304	Zinc-plated steel	AISI 304	AISI 316	AISI 316
14 - Rod guide bush	Technopolymer	Technopolymer	Technopolymer	Technopolymer	Steel + PTFE	Technopolymer	Technopolymer	Technopolymer
15 - Sleeve	Aluminium	Aluminium	Aluminium	Aluminium	Aluminium	Aluminium	Aluminium	Aluminium
16 - Seal of piston lock	NBR	NBR	NBR	NBR for -40°C/-50°C	FKM	NBR	NBR	NBR
17 - Locking piston	AISI 304	AISI 304	AISI 304	AISI 304	AISI 304	AISI 304	AISI 304	AISI 304
18 - Standard cover	AISI 304	-	AISI 304	AISI 304	AISI 304	AISI 304	AISI 304	AISI 304
19 - Filter	Brass	-	Brass	Brass	Brass	Brass	Brass	Brass
20 - Spring	Spring steel	Spring steel	Spring steel	Spring steel	Spring steel	Spring steel	Spring steel	Spring steel
21 - Internal cover	Anodized aluminium	spring Anodized aluminium	Anodized aluminium	Anodized aluminium	Anodized aluminium	Anodized aluminium	Anodized aluminium	Anodized aluminium
22 - Seeger ring	Spring steel	Spring steel	Spring steel	Spring steel	Spring steel	Spring steel	Spring steel	Spring steel
23 - Cover - unlocking	-	Anodized aluminium	Anodized aluminium	Anodized aluminium	Anodized aluminium	Anodized aluminium	Anodized aluminium	Anodized aluminium
24 - Unlocking pin	-	AISI 303	AISI 303	AISI 303	AISI 303	AISI 303	AISI 303	AISI 303
25 - Unlocking ring	-	Spring steel	Spring steel	Spring steel	Spring steel	Spring steel	Spring steel	Spring steel

ACCESSORIES FOR END LOCK CYLINDERS SERIES 63

Piston rod socket joint
Mod. GY

Piston rod lock nut
Mod. U

Clevis pin Mod. S

Rear trunnion ball-joint
Mod. R

Coupling piece
Mod. GKF

Swivel ball joint Mod. GA

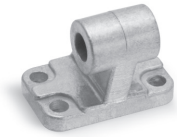

90° male trunnion
Mod. ZC

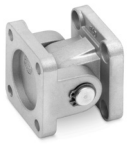

Swivel Combination
Mod. C+L+S

Front and rear flange
Mod. D-E

Self aligning rod
Mod. GK

Centre trunnion
Mod. F-63, profile cyl.

Foot mount
Mod. B-41

Front female trunnion
Mod. H and C-H

Rear female trunnion
Mod. C and C-H

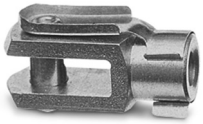

Rod fork end Mod. G

Rear trunnion male
Mod. L

Counter bracket for centre
trunnion Mod. BF

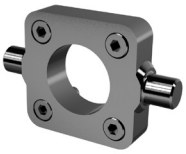

Front/rear spot faced
trunnion Mod. FN

Opposed cylinder coupler
Mod. DC-63

MANUAL UNLOCKING FUNCTION WITH M3 SCREW (NOT SUPPLIED)

Manual unlocking: Remove the cover (fig. A), unscrew the filter (fig. B), screw an M3 screw into the locking piston (fig. C) and pull the screw to unlock the rod (fig. D)

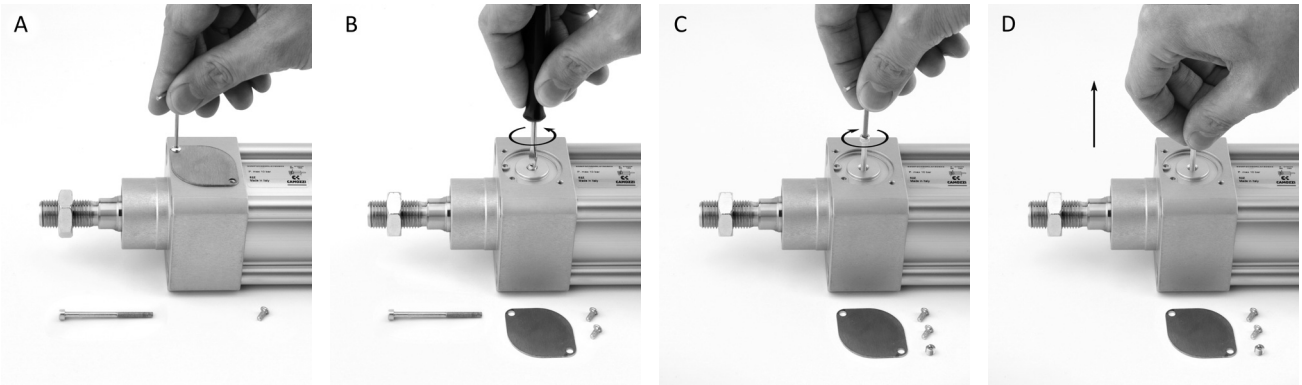

MANUAL UNLOCKING FUNCTION WITH SHAPED UNHOOKING PIN

Integrated manual unlocking: Remove the external cover (fig. A) and pull the ring to unlock the rod (fig. B)

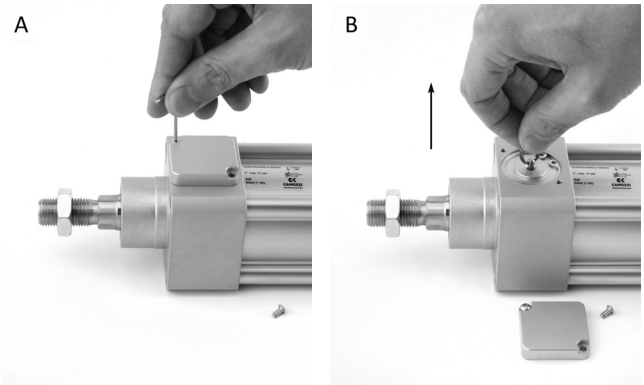

END LOCK cylinders Series 63, profile, double-acting, FL-type

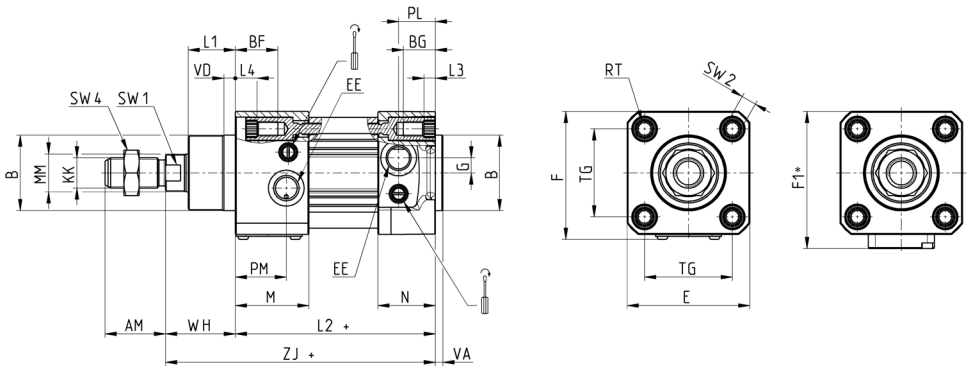

+ = add the stroke

* unlocking type "T"

Ø	ØMM	KK	ØB	PL	PM	L1	AM	VA	EE	WH	L2	L3	L4	ZJ	VD	N	BG	M	BF	RT	G	TG	E	F	F1*	SW1	SW2	SW4	front cushioning	rear cushioning
32	12	M10x1.25	30	18.5	18	18	22	4	G1/8	26	94	5.5	11,5	120	5	27	16	34	22	M6	5	32.5	47	49,7	57	10	6	17	17	17
40	16	M12x1.25	35	19	24	21	24	4	G1/4	30	105	5.5	15	135	5	30	16	40	22,5	M6	5	38	55	57,7	64,5	13	6	19	17	17
50	20	M16x1.5	40	19.5	27	25	32	4	G1/4	37	106	6	11,5	143	6	30.5	16	39	21,5	M8	8	46.5	65	67,7	72,5	17	8	24	14,5	19
63	20	M16x1.5	45	24	27	26	32	4	G3/8	37	121	6	12,5	158	6	37.5	16	44	22,5	M8	8	56.5	75	77,5	82,5	17	8	24	19,5	19
80	25	M20x1.5	45	23.5	32	30	40	4	G3/8	46	128	0	6	174	7	37	19	46	25	M10	8	72	93	95,7	99,5	22	6	30	17	21
100	25	M20x1.5	55	24	32	35	40	4	G1/2	51	138	0	7,5	189	7	39.5	19.5	47	27	M10	8	89	110	112,7	116,5	22	6	30	21	21
125	32	M27x2	60	28	39	42	54	6	G1/2	65	160	6	6	225	8	44	23	54	23	M12	10.5	110	135	137,7	142,5	27	12	41	23	33

END LOCK cylinders Series 63, profile, double-acting, BL-type

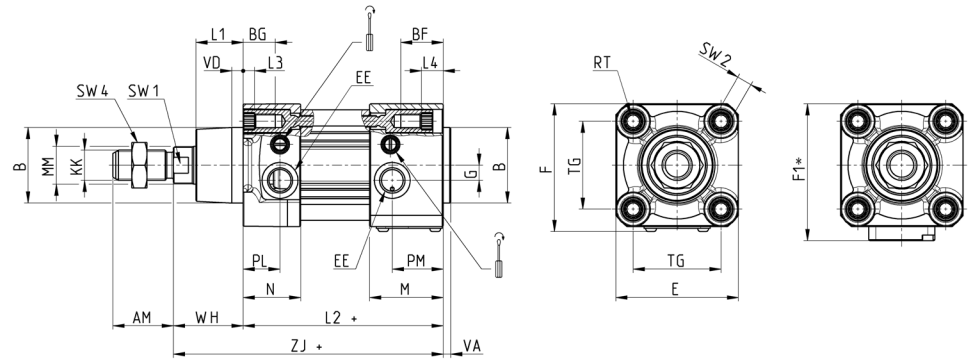

+ = add the stroke

* locking type "T"

Ø	ØMM	KK	ØB	PL	PM	L1	AM	VA	EE	WH	L2	L3	L4	ZJ	VD	N	BG	M	BF	RT	G	TG	E	F	F1*	SW1	SW2	SW4	front cushioning	rear cushioning
32	12	M10x1.25	30	18.5	18	18	22	4	G1/8	26	94	5.5	11,5	120	5	27	16	34	22	M6	5	32.5	47	49,7	57	10	6	17	17	17
40	16	M12x1.25	35	19	24	21	24	4	G1/4	30	105	5.5	15	135	5	30	16	40	25,5	M6	5	38	55	57,7	64,5	13	6	19	17	17
50	20	M16x1.5	40	19.5	27	25	32	4	G1/4	37	106	6	11,5	143	6	30.5	16	39	21,5	M8	8	46.5	65	67,7	72,5	17	8	24	19	14,5
63	20	M16x1.5	45	24	27	26	32	4	G3/8	37	121	6	12,5	158	6	37.5	16	44	22,5	M8	8	56.5	75	77,5	82,5	17	8	24	19	19,5
80	25	M20x1.5	45	23.5	32	30	40	4	G3/8	46	128	0	6	174	7	37	19	46	25	M10	8	72	93	95,7	99,5	22	6	30	21	17
100	25	M20x1.5	55	24	32	35	40	4	G1/2	51	138	0	7,5	189	7	39.5	19.5	47	27	M10	8	89	110	112,7	116,5	22	6	30	21	21
125	32	M27x2	60	28	39	42	54	6	G1/2	65	160	6	6	225	8	44	23	54	23	M12	10.5	110	135	137,7	142,5	27	12	41	33	23

END LOCK cylinders Series 63, profile, double-acting, DL-type

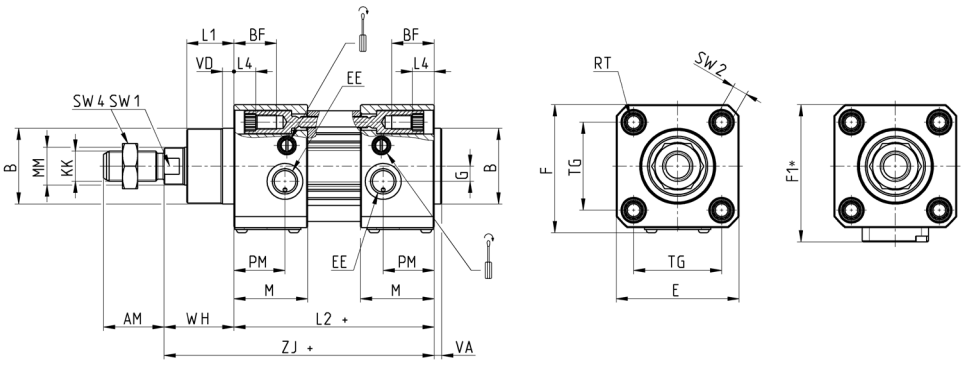

+ = add the stroke

* locking type "T"

Ø	ØMM	KK	ØB	PM	L1	AM	VA	EE	WH	L2	L4	ZJ	VD	M	BF	RT	G	TG	E	F	F1*	SW1	SW2	SW4	front/rear cushion stroke
32	12	M10x1.25	30	18	18	22	4	G1/8	26	94	11,5	120	5	34	22	M6	5	32.5	47	49,7	57	10	6	17	17
40	16	M12x1.25	35	24	21	24	4	G1/4	30	105	15	135	5	40	25,5	M6	5	38	55	57,7	64,5	13	6	19	17
50	20	M16x1.5	40	27	25	32	4	G1/4	37	106	11,5	143	6	39	21,5	M8	8	46.5	65	67,7	72,5	17	8	24	14,5
63	20	M16x1.5	45	27	26	32	4	G3/8	37	121	12,5	158	6	44	22,5	M8	8	56.5	75	77,5	82,5	17	8	24	19,5
80	25	M20x1.5	45	32	30	40	4	G3/8	46	128	6	174	7	46	25	M10	8	72	93	95,7	99,5	22	6	30	17
100	25	M20x1.5	55	32	35	40	4	G1/2	51	138	7,5	189	7	47	27	M10	8	89	110	112,7	116,5	22	6	30	21,5
125	32	M27x2	60	39	42	54	6	G1/2	65	160	6	225	8	54	23	M12	10.5	110	135	137,7	142,5	27	12	41	23

END LOCK cylinders Series 63 with protective bellow

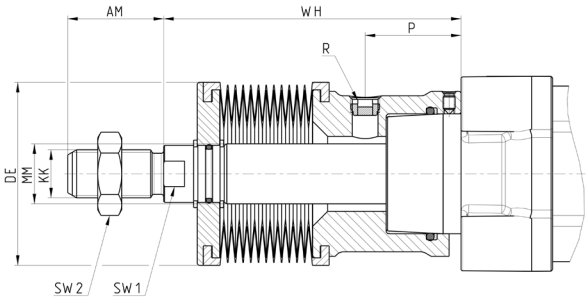

Ø	Stroke	WH	AM	KK	MM	P	R	DE	SW1	SW2
32	0 ÷ 245	88	22	M10X1.25	12	25	G1/8	61	10	17
32	246 ÷ 490	132	22	M10X1.25	12	25	G1/8	61	10	17
40	0 ÷ 245	89	24	M12X1.25	16	26	G1/8	61	13	19
40	246 ÷ 490	133	24	M12X1.25	16	26	G1/8	61	13	19
50	0 ÷ 245	99	32	M16X1.5	20	30	G1/8	61	17	24
50	246 ÷ 490	143	32	M16X1.5	20	30	G1/8	61	17	24
63	0 ÷ 245	76	32	M16X1.5	20	16.5	G1/8	61	17	24
63	246 ÷ 490	120	32	M16X1.5	20	16.5	G1/8	61	17	24
80	0 ÷ 285	86	40	M20X1.5	25	11.5	G1/8	83	22	30
80	286 ÷ 570	139	40	M20X1.5	25	11.5	G1/8	83	22	30
100	0 ÷ 285	86	40	M20X1.5	25	12	G1/8	83	22	30
100	286 ÷ 570	139	40	M20X1.5	25	12	G1/8	83	22	30
125	0 ÷ 285	108	54	M27X2	32	30	G1/8	83	29	41
125	286 ÷ 570	161	54	M27X2	32	30	G1/8	83	29	41

Opposed cylinder coupler Mod. DC-63

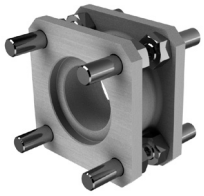

Material: Aluminium

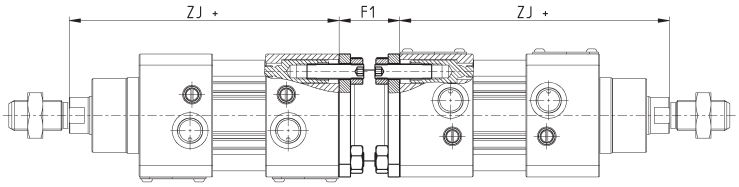

Supplied with:
1x flange
8x locking screws*
8x nuts

+ = add the stroke

*on end cap with END LOCK function, use screws Mod. KR (according to ISO 4026), supplied separately, see accessories "screws and locking screws Mod. KR"

Mod.	Ø	F1	ZJ+	Weight (g)	max overall stroke (mm)	locking screws for END LOCK* end-cap	torque force
DC-63-32	32	27	120	130	500	M6 x 30 (KR-EL-09)	5 Nm
DC-63-40	40	27	135	160	800	M6 x 35 (KR-EL-10)	5 Nm
DC-63-50	50	32	143	285	800	M8 x 35 (KR-EL-11)	10 Nm
DC-63-63	63	28	158	340	700	M8 x 35 (KR-EL-11)	10 Nm
DC-63-80	80	38	174	670	1000	M10 x 40 (KR-EL-12)	15 Nm
DC-63-100	100	48	189	820	900	M10 x 40 (KR-EL-12)	15 Nm
DC-63-125	125	48	225	1300	1000	-	20 Nm

Foot mount Mod. B-41

Material: zinc-plated steel

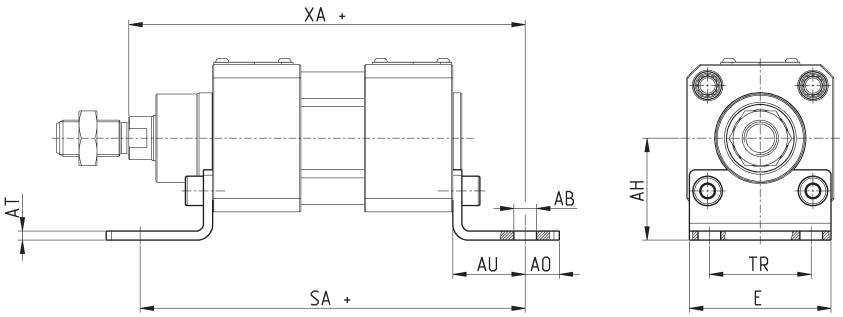

Supplied with:
2x feet
4x screws*

+ = add the stroke

*on end cap with END LOCK function, use screws Mod. KR (according to ISO 4026), supplied separately, see accessories "screws and locking screws Mod. KR"

Mod.	Ø	AT	SA+	XA+	TR	E	AB	AH	AO	AU	screws for END LOCK* end-cap	torque force
B-41-32	32	4	142	144	32	45	7	32	11	24	M6 x 25 (KR-EL-01)	5 Nm
B-41-40	40	4	161	163	36	53,5	10	36	15	28	M6 x 25 (KR-EL-01)	5 Nm
B-41-50	50	4	170	175	45	62,5	10	45	15	32	M8 x 25 (KR-EL-04)	10 Nm
B-41-63	63	5	185	190	50	73	10	50	15	32	M8 x 25 (KR-EL-04)	10 Nm
B-41-80	80	6	210	216	63	92	12	63	20	41	M10 x 30 (KR-EL-07)	15 Nm
B-41-100	100	6	220	230	71	108,5	14,5	71	25	41	M10 x 30 (KR-EL-07)	15 Nm
B-41-125	125	7	250	270	90	132	16,5	90	25	45	-	20Nm

Front and rear flange Mod. D-E

Material: Aluminium

Supplied with:
1x flange
4x screws*

+ = add the stroke

*on end cap with END LOCK function, use screws Mod. KR (according to ISO 4026), supplied separately, see accessories "screws and locking screws Mod. KR"

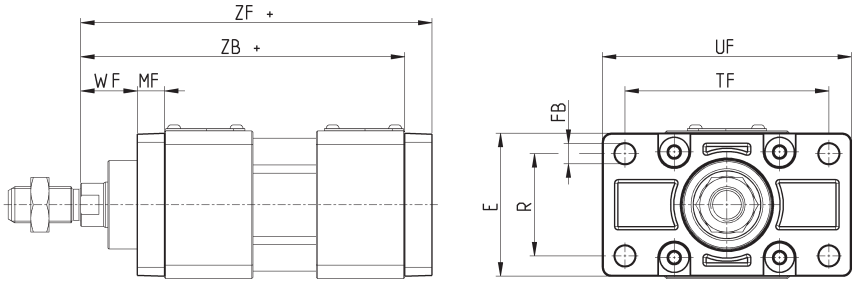

Mod.	Ø	W	MF	ZB	TF	R	UF	E	FB	ZF	screws for END LOCK* end-cap	torque force
D-E-41-32	32	16	10	120	64	32	80	45	7	130	M6 x 25 (KR-EL-01)	5 Nm
D-E-41-40	40	20	10	135	72	36	90	52	9	145	M6 x 30 (KR-EL-02)	5 Nm
D-E-41-50	50	25	12	143	90	45	110	65	9	155	M8 x 25 (KR-EL-04)	10 Nm
D-E-41-63	63	25	12	158	100	50	120	75	9	170	M8 x 25 (KR-EL-04)	10 Nm
D-E-41-80	80	30	16	174	126	63	148	95	12	190	M10 x 30 (KR-EL-07)	15 Nm
D-E-41-100	100	35	16	189	150	75	176	115	14	205	M10 x 35 (KR-EL-08)	15 Nm
D-E-41-125	125	45	20	225	180	90	220	140	16	245	-	20 Nm

Rear female trunnion Mod. C and C-H

Material: Aluminium

Supplied with:
1x female trunnion
4x screws*

+ = add the stroke

*on end cap with END LOCK function, use screws Mod. KR (according to ISO 4026), supplied separately, see accessories "screws and locking screws Mod. KR"

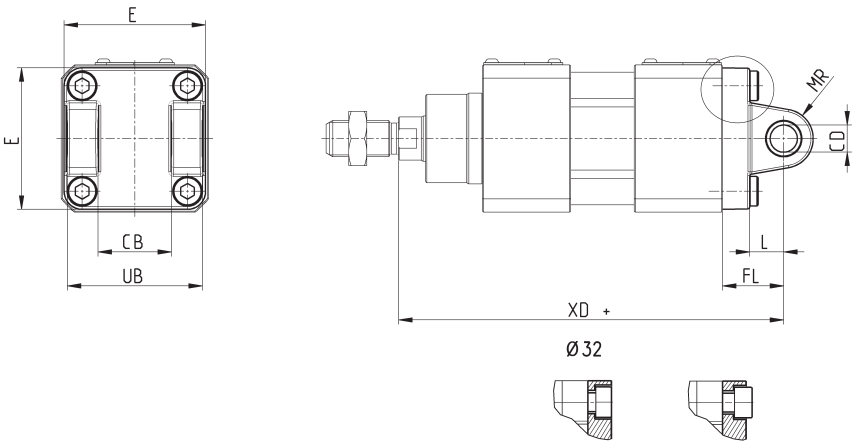

Mod.	Ø	CD	L	FL	XD	MR	E	CB	UB	screws for END LOCK* end-cap	torque force
C-41-32	32	10	12.5	22	142	10	47	26	46.5	M6 x 25 (KR-EL-01)	5 Nm
C-41-40	40	12	16	25	160	12	52	28	52	M6 x 30 (KR-EL-02)	5 Nm
C-41-50	50	12	16	27	170	12	64	32	60	M8 x 25 (KR-EL-04)	10 Nm
C-H-41-63	63	16	21	32	190	16	74	40	70	M8 x 25 (KR-EL-04)	10 Nm
C-H-41-80	80	16	22	36	210	16	93	50	90	M10 x 30 (KR-EL-07)	15 Nm
C-H-41-100	100	20	27	41	230	20	114	60	110	M10 x 35 (KR-EL-08)	15 Nm
C-H-41-125	125	25	30	50	275	25	140	70	130	-	20 Nm

Front female trunnion Mod. H and C-H

Material: Aluminium

Supplied with:
1x female trunnion
4x screws*

+ = add the stroke

*on end cap with END LOCK function, use screws Mod. KR (according to ISO 4026), supplied separately, see accessories "screws and locking screws Mod. KR"

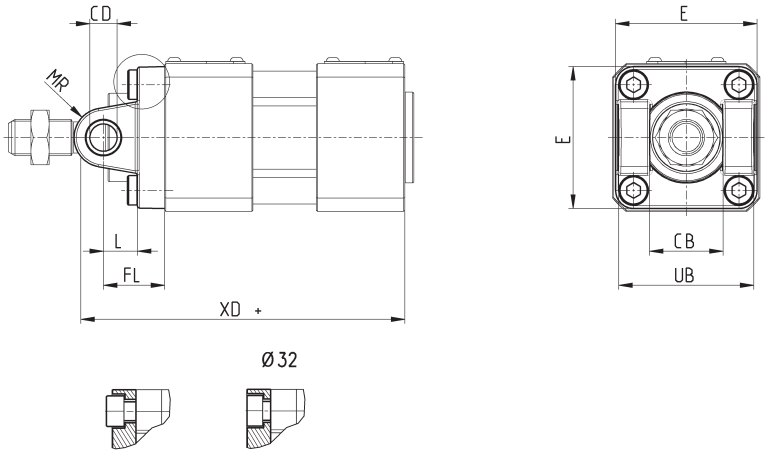

Mod.	Ø	CB	UB	E	XD+	FL	L	CD	MR	screws for END LOCK* end-cap	torque force
H-41-32	32	26	46.5	47	120	22	12.5	10	10	M6 x 25 (KR-EL-01)	5 Nm
H-41-40	40	28	52	52	135	25	16	12	12	M6 x 30 (KR-EL-02)	5 Nm
H-41-50	50	32	60	64	143	27	16	12	12	M8 x 25 (KR-EL-04)	10 Nm
H-60-63	63	40	70	74	158	32	21	16	16	M8 x 25(KR-EL-04)	10 Nm
C-H-41-80	80	50	90	94	174	36	22	16	16	M10 x 30 (KR-EL-07)	15 Nm
C-H-41-100	100	60	110	114	189	41	27	20	20	M10 x 35 (KR-EL-08)	15 Nm
C-H-41-125	125	70	130	140	225	50	30	25	25	-	20 Nm

Rear male trunnion Mod. L

Material: Aluminium

Supplied with:
1x male trunnion
4x screws*

+ = add the stroke

*on end cap with END LOCK function, use screws Mod. KR (according to ISO 4026), supplied separately, see accessories "screws and locking screws Mod. KR"

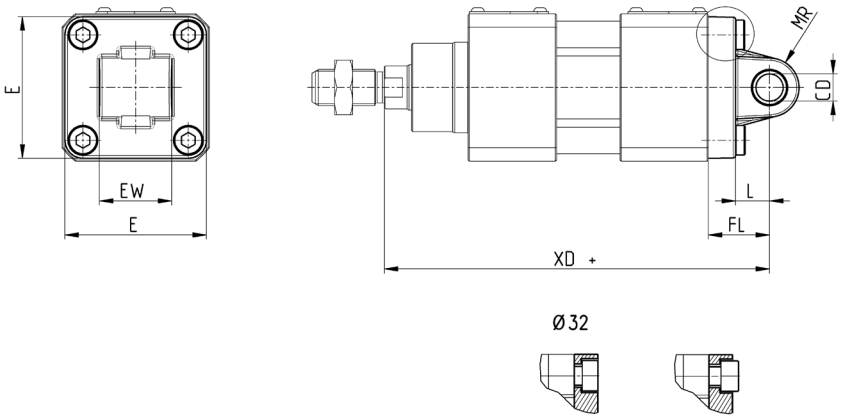

Mod.	Ø	CD	L	FL	XD	MR	E	EW	screws for END LOCK* end-cap	torque force
L-41-32	32	10	13	22	142	10	46	26	M6 x 25 (KR-EL-01)	5 Nm
L-41-40	40	12	16	25	160	12	52	28	M6 x 30 (KR-EL-02)	5 Nm
L-41-50	50	12	16	27	170	12	64	32	M8 x 25 (KR-EL-04)	10 Nm
L-41-63	63	16	21	32	190	16	74	40	M8 x 25 (KR-EL-04)	10 Nm
L-41-80	80	16	22	36	210	16	93	50	M10 x 30 (KR-EL-07)	15 Nm
L-41-100	100	20	27	41	230	20	114	60	M10 x 35 (KR-EL-08)	15 Nm
L-41-125	125	25	30	50	275	25	140	70	-	20 Nm

Front/rear spot faced trunnion Mod. FN

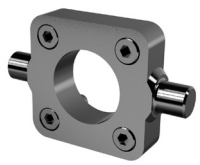

Material: zinc-plated steel

Supplied with:
1x centre spot faced trunnion
4x screws*

+ = add the stroke

*on end cap with END LOCK function, use screws Mod. KR (according to ISO 4026), supplied separately, see accessories "screws and locking screws Mod. KR"

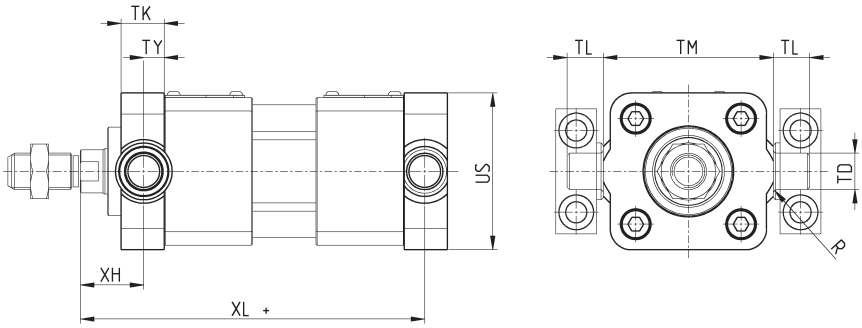

Mod.	Ø	TK	TY	XH	XL+	US	TL	TM	TD	R	screws for END LOCK* end-cap	torque force
FN-32	32	14	6.5	19.5	126.5	46	12	50	12	1	M6 x 25 (KR-EL-01)	5 Nm
FN-40	40	19	9	21	144	59	16	63	16	1.5	M6 x 35 (KR-EL-03)	5 Nm
FN-50	50	19	9	28	152	69	16	75	16	1.6	M8 X 30 (KR-EL-05)	10 Nm
FN-63	63	24	11.5	25.5	169.5	84	20	90	20	1.6	M8 x 35 (KR-EL-05)	10 Nm
FN-80	80	24	11.5	34.5	185.5	102	20	110	20	1.6	M10 x 35 (KR-EL-08)	15 Nm
FN-100	100	29	14	37	203	125	25	132	25	1.6	M10 x 35 (KR-EL-08)	15 Nm
FN-125	125	30	15	50	240	150	25	160	25	2	-	20 Nm

Trunnion ball-joint Mod. R

** This trunnion doesn't comply with the ISO 15552 standard
Material: Aluminium

Supplied with:
1x trunnion ball joint
4x screws*

+ = add the stroke

*on end cap with END LOCK function, use screws Mod. KR (according to ISO 4026), supplied separately, see accessories "screws and locking screws Mod. KR"

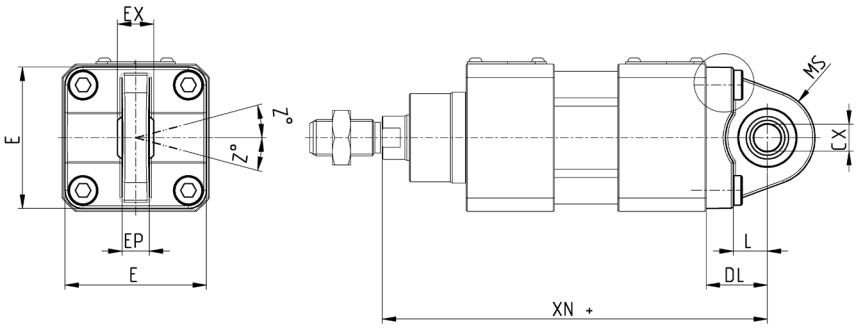

R-41-50 / 80 / 125

Mod.	Ø	øCX	L	DL+	XN+	MS	E	EX	EP	Z	screws for END LOCK* end-cap	torque force
R-41-32	32	10	13	22	142	16	45	14	10.5	4	M6 x 25 (KR-EL-01)	5 Nm
R-41-40	40	12	16	25	160	19	52	16	12	4	M6 x 30 (KR-EL-02)	5 Nm
R-41-50**	50	12	15	27	170	21	62.5	16	12	4	M8 x 30 (KR-EL-05)	10 Nm
R-41-63	63	16	21	32	190	24	75	21	15	4	M8 x 25 (KR-EL-04)	10 Nm
R-41-80**	80	16	24	36	210	28	92	21	15	4	M10 x 35 (KR-EL-08)	15 Nm
R-41-100	100	20	27	41	230	30	115	25	18	4	M10 x 35 (KR-EL-08)	15 Nm
R-41-125	125	30	30	50	275	40	140	37	25	4	-	20 Nm
R-50	50	16	16	27	170	21,5	65	21	15	4	M8 x 25 (KR-EL-04)	10 Nm
R-80	80	20	22	36	210	28,5	95	25	18	4	M10 X 30 (KR-EL-07)	15 Nm

Centre trunnion Mod. F-63 for cylinders, FL-type

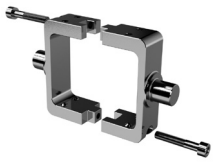

Material: zinc-plated steel

Supplied with:
1 centre trunnion
8 locking screws
2 fixing screws

+ = add the stroke

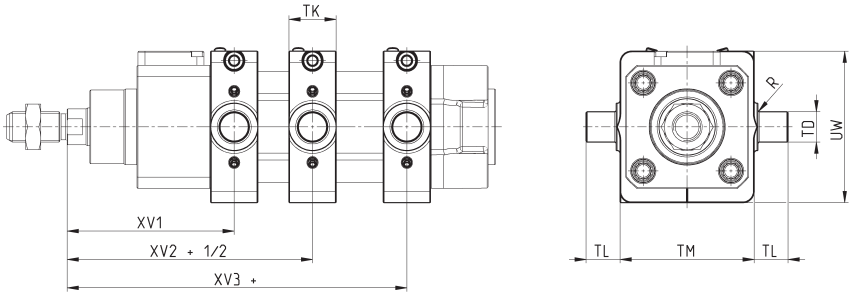

Mod.	Ø	XV1	XV2	XV3	TM (h14)	TK	TD (e9)	TL (h14)	UW	R
F-63-32	32	70	73	83	50	20	12	12	62	0.5
F-63-40	40	79.5	82.5	95	63	20	16	16	70	1
F-63-50	50	88.5	90	100	75	25	16	16	80	1
F-63-63	63	93.5	97.5	108	90	25	20	20	90	1
F-63-80	80	107	110	122	110	30	20	20	115	1
F-63-100	100	113	120	134.5	132	30	25	25	135	1.5
F-63-125	125	134	145	166	160	30	25	25	162	1.5

Centre trunnion Mod. F-63 for cylinders, DL-type

Material: zinc-plated steel

Supplied with:
1x centre trunnion
8x locking screws
2x fixing screws

+ = add the stroke

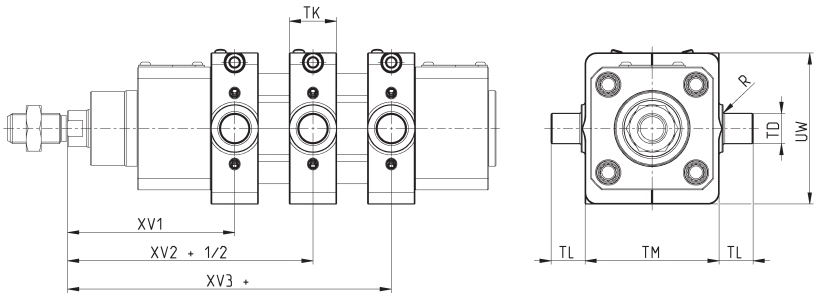

Mod.	Ø	XV1	XV2	XV3	TM (h14)	TK	TD (e9)	TL (h14)	UW	R
F-63-32	32	70	73	76	50	20	12	12	62	0.5
F-63-40	40	79.5	82.5	85.5	63	20	16	16	70	1
F-63-50	50	88.5	90	91.5	75	25	16	16	80	1
F-63-63	63	93.5	97.5	101.5	90	25	20	20	90	1
F-63-80	80	107	110	113	110	30	20	20	115	1
F-63-100	100	113	120	127	132	30	25	25	135	1.5
F-63-125	125	134	145	156	160	30	25	25	162	1.5

Centre trunnion Mod. F-63 for cylinders, DL-type

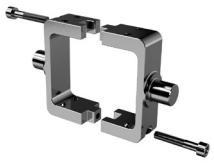

Material: zinc-plated steel

Supplied with:
1x centre trunnion
8x locking screws
2x fixing screws

+ = add the stroke

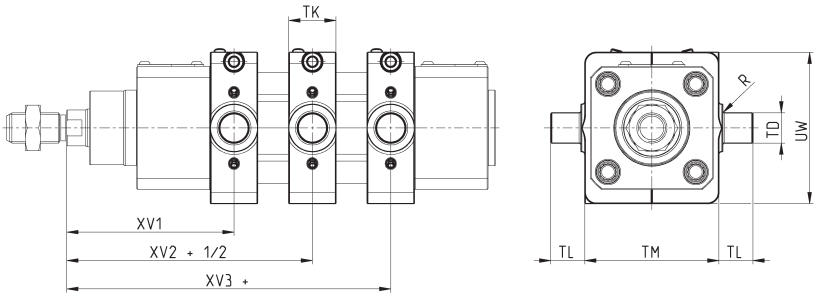

Mod.	Ø	XV1	XV2	XV3	TM (h14)	TK	TD (e9)	TL (h14)	UW	R
F-63-32	32	63	73	76	50	20	12	12	62	0.5
F-63-40	40	70	82.5	85.5	63	20	16	16	70	1
F-63-50	50	80	90	91.5	75	25	16	16	80	1
F-63-63	63	87	97.5	101.5	90	25	20	20	90	1
F-63-80	80	98	110	113	110	30	20	20	115	1
F-63-100	100	105.5	120	127	132	30	25	25	135	1.5
F-63-125	125	124	145	156	160	30	25	25	162	1.5

Accessory combination Mod. C+L+S

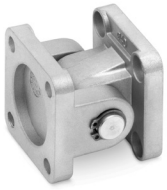

Material: Aluminium

+ = add the stroke

On end cap with end lock function, use Mod. K screws (according to DIN 7984)

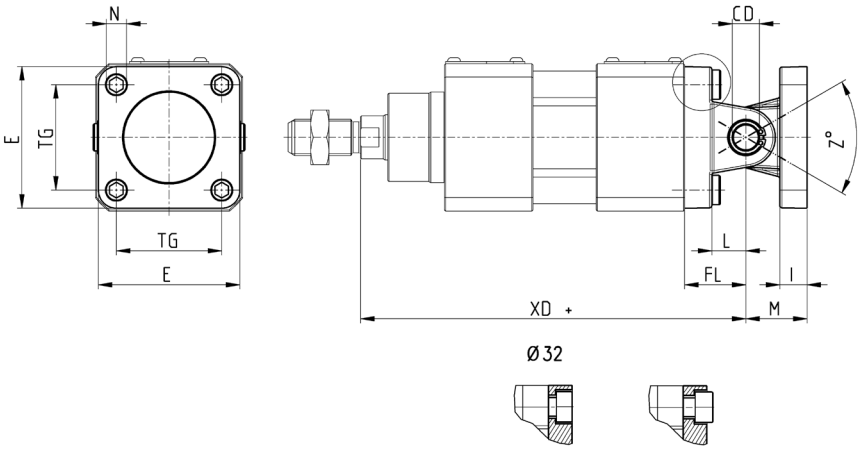

Mod.	Ø	E	TG	øN	XD+	øCD	L	FL	I	M	Z° (max)	screws for END LOCK* end-cap	torque force
C+L+S	32	47	32.5	10	142	10	12.5	22	9.5	22	30	M6 x 25	5 Nm
C+L+S	40	52	38	12	160	12	16	25	9	25	40	M6 x 30	5 Nm
C+L+S	50	64	46.5	12	170	12	16	27	11	27	25	M8 x 25	10 Nm
C+L+S	63	74	56.5	16	190	16	21	32	11	32	36	M8 x 25	10 Nm
C+L+S	80	94	72	16	210	16	22	36	14	36	34	M10 x 30	15 Nm
C+L+S	100	114	89	20	230	20	27	41	14	41	38	M10 x 35	15 Nm
C+L+S	125	140	110	25	275	25	30	50	20	50	30	-	20 Nm

90° male trunnion Mod. ZC

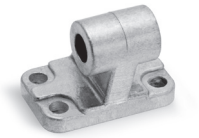

CETOP RP 107P
Material: Aluminium

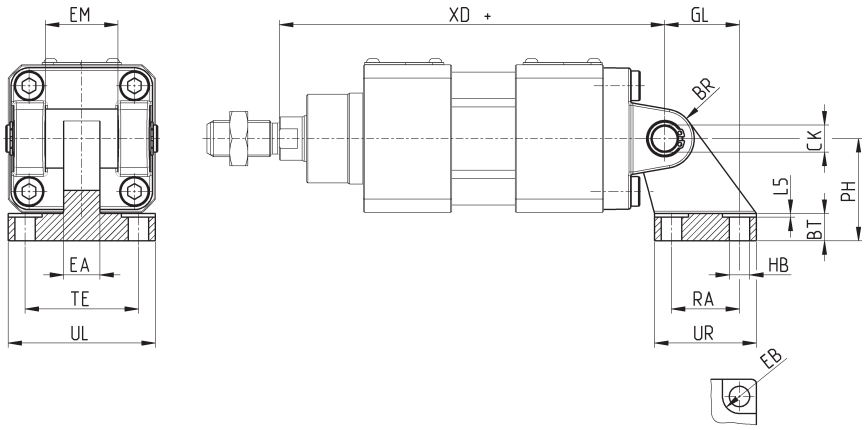

Supplied with:
1x male support

+ = add the stroke

DIMENSIONS																
Mod.	Ø	EB	CK	HB	XD+	TE	UL	EA	GL	L5	RA	EM	UR	PH	BT	BR
ZC-32	32	11	10	6,6	142	38	51	10	21	1,6	18	26	31	32	8	10
ZC-40	40	11	12	6,6	160	41	54	15	24	1,6	22	28	35	36	10	11
ZC-50	50	15	12	9	170	50	65	16	33	1,6	30	32	45	45	12	13
ZC-63	63	15	16	9	190	52	67	16	37	1,6	35	40	50	50	14	15
ZC-80	80	18	16	11	210	66	86	20	47	2,5	40	50	60	63	14	15
ZC-100	100	18	20	11	230	76	96	20	55	2,5	50	60	70	71	17	19
ZC-125	125	20	25	14	275	94	124	30	70	3,2	60	70	90	90	20	22,5

Counter bracket for centre trunnion Mod. BF

Material: Aluminium

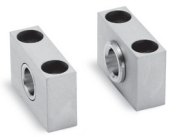

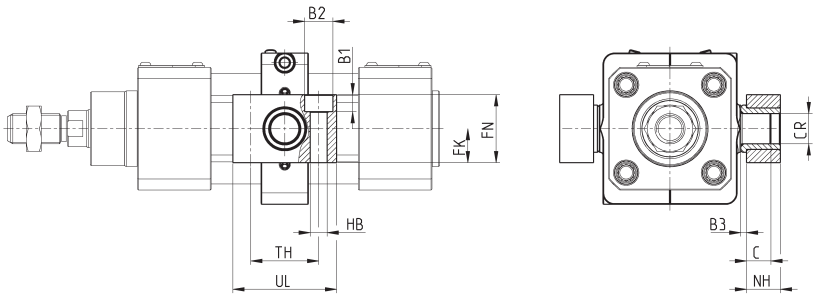

Supplied with:
2x supports

Mod.	Ø	ø CR	NH	C	B3	TH	UL	FK	FN	B1	B2	HB
BF-32	32	12	15	7,5	3	32	46	15	30	6,8	11	6,6
BF-40-50	40 - 50	16	18	9	3	36	55	18	36	9	15	9
BF-63-80	63 - 80	20	20	10	3	42	65	20	40	11	18	11
BF-100-125	100 - 125	25	25	12,5	3,5	50	75	25	50	13	20	14

Clevis pin Mod. S

Supplied with:
1x clevis pin in stainless steel 303
2x seeger in steel

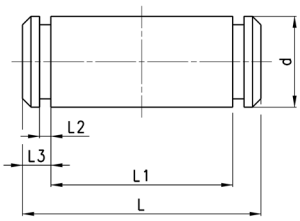

DIMENSIONS						
Mod.	Ø	d	L	L1	L2	L3
S-32	32	10	52	46	1.1	3
S-40	40	12	59	53	1.1	3
S-50	50	12	67	61	1.1	3
S-63	63	16	77	71	1.1	3
S-80	80	16	97	91	1.1	3
S-100	100	20	121	111	1.3	5
S-125	125	25	140.5	132	1.3	4.25

Swivel ball joint Mod. GA

ISO 8139.
Material: zinc-plated steel.

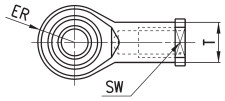

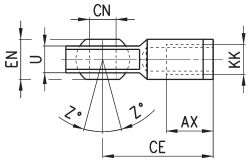

Mod.	øCN(H7)	U	EN	ER	AX	CE	KK	øT	Z	SW
GA-32	10	10,5	14	14	20	43	M10X1,25	15	6,5	17
GA-40	12	12	16	16	22	50	M12X1,25	17,5	6,5	19
GA-50-63	16	15	21	21	28	64	M16X1,5	22	7,5	22
GA-80-100	20	18	25	25	33	77	M20x1,5	27,5	7	30
GA-41-125	30	25	37	37	51	110	M27x2	40	7,5	41

Piston rod socket joint Mod. GY

Material: zama and zinc-plated steel.

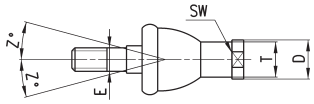

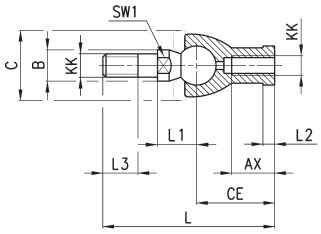

DIMENSIONS																
Mod.	Ø	KK	L	CE	L2	AX	SW	SW1	L1	L3	øT	øD	E	øB	øC	Z
GY-32	32	M10X1,25	74	35	6,5	18	17	11	19,5	15	15	19	10	14	28	15
GY-40	40	M12X1,25	84	40	6,5	20	19	17	21	17	17,5	22	12	19	32	15
GY-50-63	50-63	M16X1,5	112	50	8	27	22	19	27,5	23	22	27	16	22	40	11
GY-80-100	80-100	M20x1,5	133	63	10	38	30	24	31,5	25	27,5	34	20	27	45	7,5

Rod fork end Mod. G

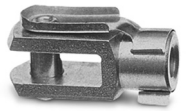

ISO 8140
Material: zinc-plated steel

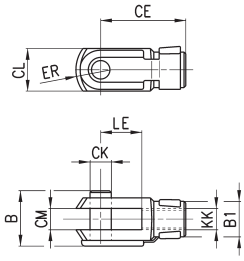

Mod.	øCK	LE	CM	CL	ER	CE	KK	B	øB1
G-25-32	10	20	10	20	12	40	M10 X 1,25	26	18
G-40	12	24	12	24	14	48	M12 X 1,25	32	20
G-50-63	16	32	16	32	19	64	M16 X 1,5	40	26
G-80-100	20	40	20	40	25	80	M20 X 1,5	48	34
G-41-125	30	54	30	55	38	110	M27 X 2	74	48

Piston rod lock nut Mod. U

ISO 4035
Material: zinc-plated steel.

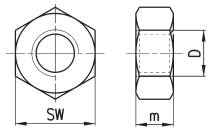

Mod.	D	m	SW
U-25-32	M10X1,25	6	17
U-40	M12X1,25	7	19
U-50-63	M16X1,5	8	24
U-80-100	M20x1,5	9	30
U-41-125	M27x2	12	41

Self aligning rod Mod. GK

Material: zinc-plated steel.

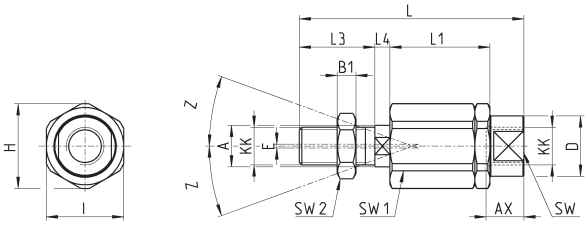

DIMENSIONS																	
Mod.	Ø	KK	L	L1	L3	L4	øA	øD	H	I	SW	SW1	SW2	B1	AX	Z	E
GK-25-32	25-32	M10x1,25	71,5	35	20	7,5	14	22	32	30	19	12	17	5	22	4	2
GK-40	40	M12x1,25	75,5	35	24	7,5	14	22	32	30	19	12	19	6	22	4	2
GK-50-63	50-63	M16x1,5	104	53	32	10	22	32	45	41	27	20	24	8	30	3	2
GK-80-100	80-100	M20x1,5	119	53	40	10	22	32	45	41	27	20	30	10	37	3	2
GK-125	125	M27x2	147	60	54	10	32	57	70	65	54	24	41	12	48	4	2

Coupling piece Mod. GKF

Material: zinc-plated steel.

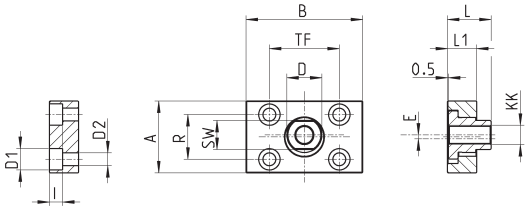

DIMENSIONS														
Mod.	Ø	KK	A	B	R	TF	L	L1	I	Ø D	Ø D1	Ø D2	SW	E
GKF-25-32	32	M10x1,25	37	60	23	36	22,5	15	6,8	18	11	6,6	15	2
GKF-40	40	M12x1,25	56	60	38	42	22,5	15	9	20	15	9	15	2,5
GKF-50-63	50-63	M16x1,5	80	80	58	58	26,5	15	10,5	25	18	11	22	2,5
GKF-80-100	80-100	M20x1,5	90	90	65	65	32,5	20	13	30,5	20	14	27	2,5
GKF-125	125	M27x2	90	90	65	65	35,5	20	13	40	20	14	36	4

Screws and locking screws Mod. KR

Material: zinc-plated steel

Mod.	
KR-EL-01	N° 4 screw M6 x 25 DIN 7984
KR-EL-02	N° 4 screws M6 x 30 DIN 7984
KR-EL-03	N° 4 screws M6 x 35 DIN 7984
KR-EL-04	N° 4 screws M8 x 25 DIN 7984
KR-EL-05	N° 4 screws M8 x 30 DIN 7984
KR-EL-06	N° 4 screws M8 x 35 DIN 7984
KR-EL-07	N° 4 screws M10 x 30 DIN 7984
KR-EL-08	N° 4 screws M10 x 35 DIN 7984
KR-EL-09	N°8 locking screws M6 x 30 ISO 4016
KR-EL-10	N°8 locking screws M6 x 35 ISO 4016
KR-EL-11	N°8 locking screws M8 x 35 ISO 4016
KR-EL-12	N°8 locking screws M10 x 40 ISO 4016

Series 61 cylinders - Aluminium profile

Single and double-acting, magnetic, cushioned
Standard, low friction, low temperatures and tandem versions
ø 32, 40, 50, 63, 80, 100, 125 mm

- In compliance with ISO 15552 standards and with the previous DIN/ISO 6431 - VDMA 24562 standards
- Rolled stainless steel rod
- Clean design with adjustable pneumatic cushioning
- Available special versions

TANDEM:

- Double thrust and traction forces

LOW FRICTION:

- Friction force reduced by over 40%

LOW TEMPERATURE:

- Versions for -40°C and for -50°C

G VARIANT FOR DUSTY APPLICATIONS:

- Highly resistant to dust, cement, resin, mud and wood residue

Series 61 cylinders comply with the ISO 15552 standards and can be assembled with the entire range of standard accessories. A permanent magnet, mounted on the piston in these cylinders, enables information to be received regarding the piston position by means of proximity switches mounted in grooves along the cylinder profile. These grooves can be covered with a slot cover profile.

This cylinder series is equipped with adjustable end-stroke cushioning. Moreover, they are equipped with a mechanical cushioning in order to reduce the impact of the piston as it reaches the end of the stroke.

GENERAL DATA

Type of construction	with tie-rods (inside the profile)
Operation	double-acting, single-acting, tandem. Low friction version: double-acting only.
Design	ISO 15552
Materials	standard: AL end-blocks and piston, rolled stainless steel AISI 420B rod, anodized AL profile tube, zinc-plated steel tie-rods and tie-rod nuts, PU seals; low friction: standard materials with NBR piston seal and NBR rod seal (FKM rod seal on request) low temperature: standard materials with chrome plated stainless steel AISI 420B rod, brass rod scraper ring, stainless steel AISI 303 nuts, stainless steel AISI 420B tie-rods, PU piston seals and NBR rod seal
Type of mounting	with front / rear flange, foot mounting, with front / rear / centre / swivel trunnion
Stroke min - max	10 ÷ 2500 mm
Operating temperature	standard and low friction: 0°C ÷ 80°C (with dry air -20°C) low temperature (-40°C version): -40°C ÷ 60°C (with dry air -40°C) low temperature (-50°C version): -50°C ÷ 60°C (with dry air -50°C)
Operating pressure	1 ÷ 10 bar (standard and low temperature); 0,1 ÷ 10 bar (low friction)
Speed	10 ÷ 1000 mm/sec, no load (standard and low temperature); 5 ÷ 1000 mm/sec, no load (low friction)
Fluid	filtered air, without lubrication. For standard versions only: if lubricated air is used, it is recommended to use oil ISOVG32. Once applied the lubrication should never be interrupted.

STANDARD STROKES FOR CYLINDERS SERIES 61

■ = Single-acting (standard and low temperature) ✖ = Double-acting (standard, low friction and low temperature)
Other strokes up to 2500 mm are available on request.

STANDARD STROKES														
Ø	25	50	75	80	100	125	150	160	200	250	300	320	400	500
32	■ ✖	■ ✖	■ ✖	✖	✖	✖	✖	✖	✖	✖	✖	✖	✖	✖
40	■ ✖	■ ✖	■ ✖	✖	✖	✖	✖	✖	✖	✖	✖	✖	✖	✖
50	■ ✖	■ ✖	■ ✖	✖	✖	✖	✖	✖	✖	✖	✖	✖	✖	✖
63	■ ✖	■ ✖	■ ✖	✖	✖	✖	✖	✖	✖	✖	✖	✖	✖	✖
80	■ ✖	■ ✖	■ ✖	✖	✖	✖	✖	✖	✖	✖	✖	✖	✖	✖
100		■ ✖	■ ✖	✖	✖	✖	✖	✖	✖	✖	✖	✖	✖	✖
125		✖	✖	✖	✖	✖	✖	✖	✖	✖	✖	✖	✖	✖

CODING EXAMPLE

61	M	2	P	050	A	0200	

61	SERIES	
M	VERSION M = standard, magnetic L = low friction, magnetic	
2	OPERATION 1 = single-acting, front spring (ø 32 ± ø 100) 2 = double-acting, front and rear cushioned 3 = double-acting, no cushion 4 = double-acting, rear cushioned 5 = double-acting, front cushioned 6 = double-acting, through-rod, front and rear cushioned 7 = single-acting, through-rod 8 = double-acting, through-rod, no cushion	PNEUMATIC SYMBOLS CS07 CD09 CD08 CD10 CD11 CD13 CS11 CD12
P	MATERIALS P = see the GENERAL DATA table on the previous page R = stainless steel AISI 420B tie-rods, stainless steel AISI 303 tie-rod nuts, other materials (see the previous page) C = rolled stainless steel AISI 303 piston rod, stainless steel AISI 304 piston rod nut U = rolled stainless steel AISI 303 piston rod, AISI 304 piston-rod nut, AISI 420B tie-rods, AISI 303 tie-rod nuts W = rolled stainless steel AISI 304 piston rod, AISI304 piston-rod nut, AISI 420B tie-rods, AISI 303 tie-rod nuts Z = chrome plated stainless steel AISI 420B rod, stainless steel AISI 304 rod nut, stainless steel AISI 420B tie-rods, stainless steel AISI 303 tie-rods nuts, seals for low temperature (-40°C), brass rod scraper Y = chrome plated stainless steel AISI 420B rod, stainless steel AISI 304 rod nut, stainless steel AISI 420B tie-rods, stainless steel AISI 303 tie-rods nuts, seals for low temperature (-50°C), brass rod scraper	
050	BORE 032 = 32 mm - 040 = 40 mm - 050 = 50 mm - 063 = 63 mm - 080 = 80 mm - 100 = 100 mm - 125 = 125 mm	
A	CONSTRUCTION A = standard with rod nut - RL = cylinder with rod lock	
0200	STROKE (see the table)	
	= standard V = FKM rod seal N = tandem (pneumatic symbol: CD8T) R = NBR rod seal W = all FKM seals +130°C C = PU coated cylinder. Colour: Grey* L = low friction version without rod seal (rear supply only) ** (_ _ _) = extended piston rod _ _ _ mm G = with brass rod scraper (chrome plated stainless steel AISI 420B rod, NBR rod seal) * Version C: available on request. For further information, please contact our technical dept. ** The possibility to order the cylinder without piston rod seal, further reduces the friction force.	

Note: all double-acting cylinders are also available in the low friction version.

PNEUMATIC SYMBOLS

The pneumatic symbols which have been indicated in the CODING EXAMPLE are shown below.

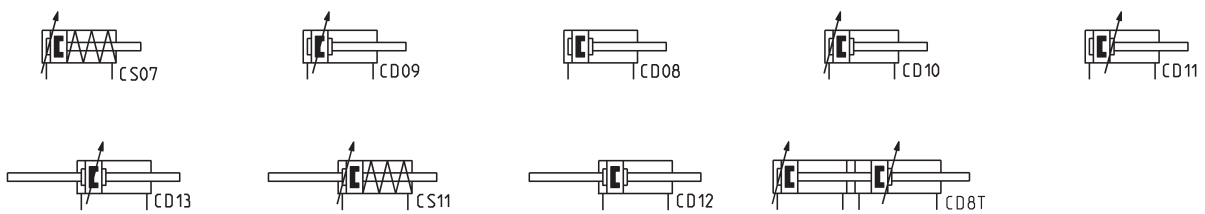

Series 61 low friction cylinders - APPLICATION EXAMPLES

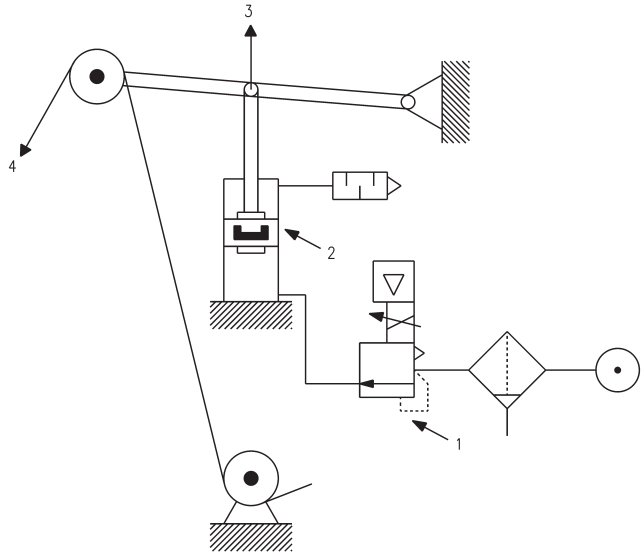

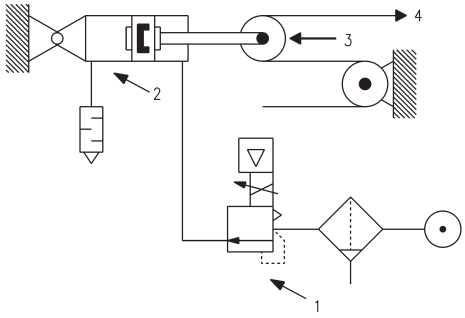

CYLINDER IN THRUST

DRAWING NOTES:
1. Precision pressure regulator or proportional regulator
2. Low friction cylinder
3. Force direction
4. Band

CYLINDER IN TRACTION

Note: in order to reach the highest performance, it is recommended to connect a precision pressure regulator or a proportional regulator with the low friction cylinder as shown in the drawing.

Series 61 low temperatures cylinders - DETAIL

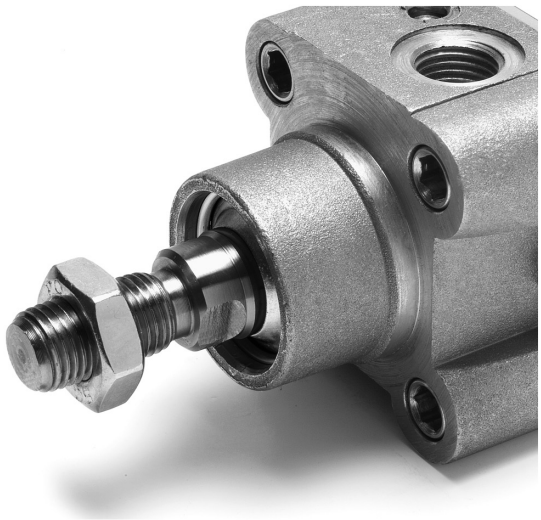

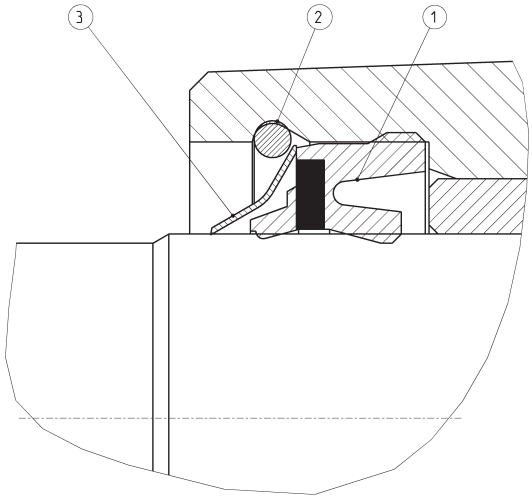

1 = rod seal
2 = flexible ring
3 = metal scraper

CYLINDERS ACCESSORIES SERIES 61

Piston rod socket joint Mod. GY

Piston rod lock nut Mod. U

Clevis pin Mod. S

Rear trunnion ball-joint Mod. R

Coupling piece Mod. GKF

Swivel ball joint Mod. GA

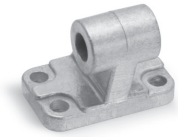

90° male trunnion Mod. ZC

Swivel Combination Mod. C+L+S

Front and rear flange Mod. D-E

Self aligning rod Mod. GK

Centre trunnion Mod. F

Foot mount Mod. B

Front female trunnion Mod. H and C-H

Rear female trunnion Mod. C and C-H

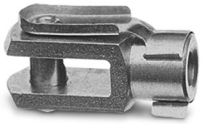

Rod fork end Mod. G

Rear trunnion male Mod. L

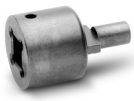

Key to disassemble cylinders Ø 80 and 100

Counter bracket for centre trunnion Mod. BF

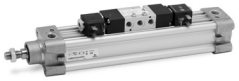

Accessory to mount valves on the cylinder

All accessories are supplied separately, except for piston rod lock nut Mod. U

Cylinders Series 61

N.B. : the single-acting cylinders, sizes ZJ and L2 are increased by 25 mm.

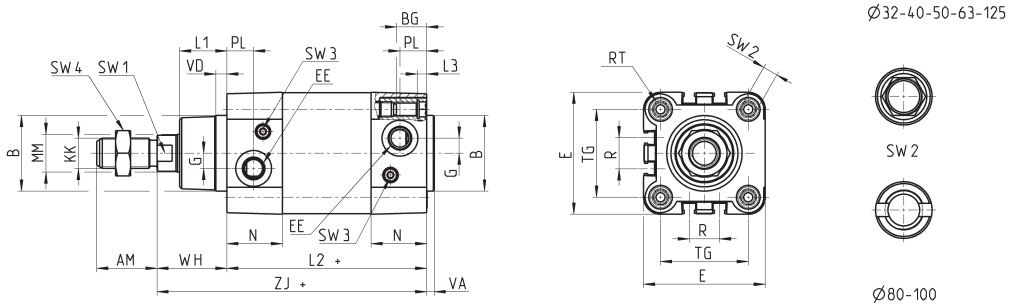

+ = add the stroke

Table note:
* = special key 80-62/8C
(see accessories)

DIMENSIONS																								
Ø	ØMM	KK	ØB	PL	L1	AM	VA	EE	WH	L2+	L3	ZJ+	VD	N	R	BG	RT	G	TG	E	SW1	SW2	SW3	SW4	front/rear cushion stroke
32	12	M10x1,25	30	14	18	22	4	G1/8	26	94	5	120	5	26	13	16	M6	5	32,5	46	10	6	2	17	17 / 12
40	16	M12x1,25	35	15	21	24	4	G1/4	30	105	5	135	5	29	13,5	16	M6	5	38	55	13	6	2	19	20 / 17
50	20	M16x1,5	40	15	25	32	4	G1/4	37	106	5	143	6	29,5	16	16	M8	8	46,5	64,5	17	8	3	24	15 / 14
63	20	M16x1,5	45	21	26	32	4	G3/8	37	121	5	158	6	36,5	28	16	M8	8	56,5	75	17	8	3	24	17 / 16
80	25	M20x1,5	45	21	30	40	4	G3/8	46	128	0	174	7	36	30	19	M10	8	72	93	22	*	5	30	20 / 20
100	25	M20x1,5	55	23	35	40	4	G1/2	51	138	0	189	7	38,5	40	19,5	M10	8	89	110	22	*	5	30	21 / 19
125	32	M27x2	60	23,5	42	54	6	G1/2	65	160	6	225	8	43	50	23	M12	10,5	110	135	27	12	4	41	26 / 25

Cylinders Series 61 - through-rod

Note: the single-acting cylinders sizes ZM and L2 are increased by 25 mm.

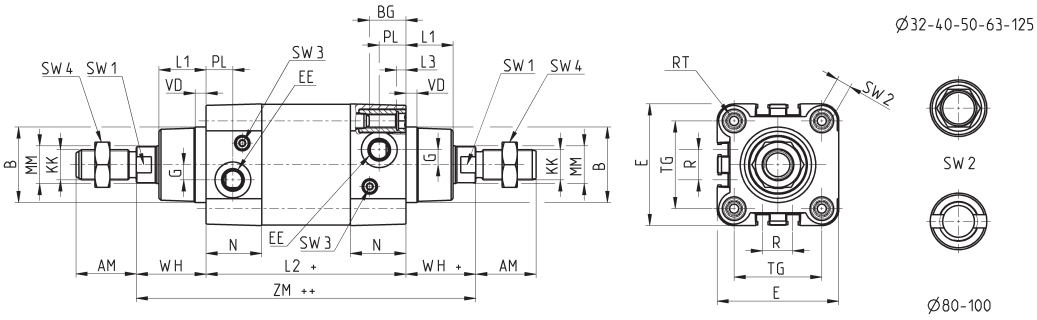

+ = add the stroke once
++ = add the stroke twice

Table note:
* = special key 80-62/8C
(see accessories)

through-rod																								
Ø	ØMM	KK	ØB	PL	L1	AM	EE	WH	L2+	L3	ZM++	VD	N	R	BG	RT	G	TG	E	SW1	SW2	SW3	SW4	Cushioning stroke
32	12	M10x1.25	30	14	18	22	G1/8	26	94	5	146	5	26	13	16	M6	5	32.5	46	10	6	2	17	17
40	16	M12x1.25	35	15	21	24	G1/4	30	105	5	165	5	29	13.5	16	M6	5	38	55	13	6	2	19	20
50	20	M16x1.5	40	15	25	32	G1/4	37	106	5	180	6	29.5	16	16	M8	8	46.5	64.5	17	8	3	24	15
63	20	M16x1.5	45	21	26	32	G3/8	37	121	5	195	6	36.5	28	16	M8	8	56.5	75	17	8	3	24	17
80	25	M20x1.5	45	21	30	40	G3/8	46	128	0	220	7	36	30	19	M10	8	72	93	22	*	5	30	20
100	25	M20x1.5	55	23	35	40	G1/2	51	138	0	240	7	38.5	40	19.5	M10	8	89	110	22	*	5	30	21
125	32	M27x2	60	23.5	42	54	G1/2	65	160	6	290	8	43	50	23	M12	10.5	110	135	27	12	4	41	26

Cylinders Series 61 - tandem version

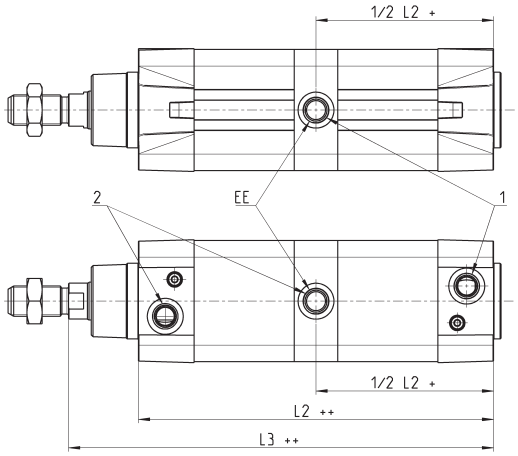

+ = add the stroke once
++ = add the stroke twice
1 = Cylinder's outlet
2 = Cylinder's return

DIMENSIONS			
Ø	EE	L2++	L3++
32	G1/8	172,5	197,5
40	G1/4	191,5	221,5
50	G1/4	188	225
63	G3/8	204	241
80	G3/8	225,5	271,5
100	G1/2	231	282
125	G1/2	264	329

Cylinders Series 61 with rod lock

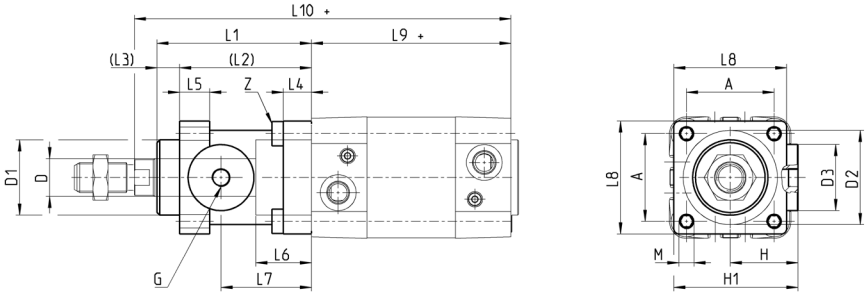

+ = add the stroke

DIMENSIONS																				
Ø	ØD	ØD1	ØD2	ØD3	A	G	H	H1	L1	L2	L3	L4	L5	L6	L7	L8	L9+	L10+	M	Z
32	12	30.5	35	25	32,5	M5	25,5	46,5	58	48	10	8	13	20,5	34	45	94	160	M6	M6x20
40	16	35	40	28	38	G1/8	30	53	65	55	10	8	13	22,5	38	50	105	178	M6	M6x20
50	20	40	50	35	46,5	G1/8	36	64	82	70	12	15	16	29,5	48	60	106	200	M8	M6x20
63	20	45	60	38	56,5	G1/8	40	75	82	70	12	15	16	29,5	49,5	70	121	215	M8	M8x30
80	25	45	80	48	72	G1/8	50	95	110	90	20	18	20	35	61	90	128	254	M10	M10x35
100	25	55	100	58	89	G1/8	58	110,5	115	100	15	18	20	39	69	105	138	269	M10	M10x35
125	32	60	130	65	110	G1/8	80	150	167	122	45	22	30	51	86,5	140	160	350	M12	M12x40

Foot mount Mod. B

Material: zinc-plated steel

Supplied with:
2x feet
4x screws

+ = add the stroke

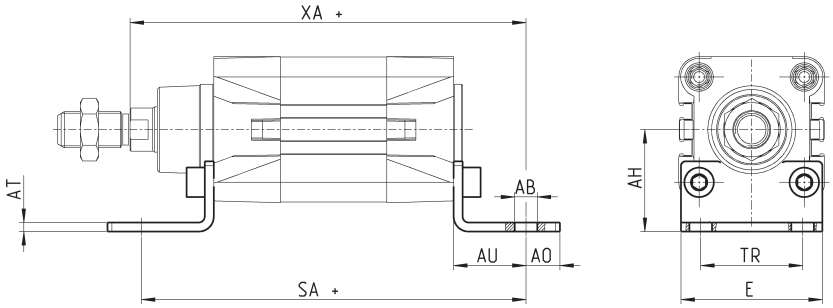

DIMENSIONS											
Mod.	Ø	AT	SA+	XA+	TR	E	AB	AH	AO	AU	torque force
B-41-32	32	4	142	144	32	45	7	32	11	24	5 Nm
B-41-40	40	4	161	163	36	53,5	10	36	15	28	5 Nm
B-41-50	50	4	170	175	45	62,5	10	45	15	32	10 Nm
B-41-63	63	5	185	190	50	73	10	50	15	32	10 Nm
B-41-80	80	6	210	216	63	92	12	63	20	41	15 Nm
B-41-100	100	6	220	230	75	108,5	14,5	71	25	41	15 Nm
B-41-125	125	7	250	270	90	132	16,5	90	25	45	20 Nm

Front and rear flange Mod. D-E

Material: Aluminium

Supplied with:
1x flange
4x screws

+ = add the stroke

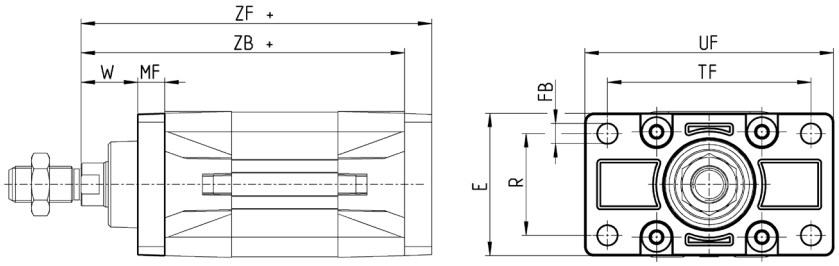

Mod.	Ø	W	MF	ZB	TF	R	UF	E	FB	ZF	torque force
D-E-41-32	32	16	10	120	64	32	80	45	7	130	5 Nm
D-E-41-40	40	20	10	135	72	36	90	52	9	145	5 Nm
D-E-41-50	50	25	12	143	90	45	110	65	9	155	10 Nm
D-E-41-63	63	25	12	158	100	50	120	75	9	170	10 Nm
D-E-41-80	80	30	16	174	126	63	150	95	12	190	15 Nm
D-E-41-100	100	35	16	189	150	75	170	115	14	205	15 Nm
D-E-41-125	125	45	20	225	180	90	220	140	16	245	20 Nm

Rear female trunnion Mod. C and C-H

Material: Aluminium

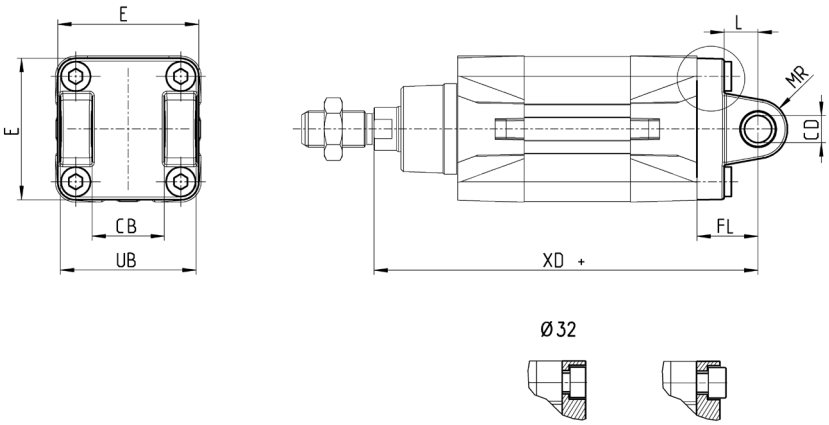

Supplied with:
1x female trunnion
4x screws

+ = add the stroke

Mod.	Ø	CD	L	FL	XD	MR	E	CB	UB	torque force
C-41-32	32	10	12.5	22	142	10	47	26	46.5	5 Nm
C-41-40	40	12	16	25	160	12	52	28	52	5 Nm
C-41-50	50	12	16	27	170	12	64	32	60	10 Nm
C-H-41-63	63	16	21	32	190	16	74	40	70	10 Nm
C-H-41-80	80	16	22	36	210	16	94	50	90	15 Nm
C-H-41-100	100	20	27	41	230	20	114	60	110	15 Nm
C-H-41-125	125	25	30	50	275	25	140	70	130	20 Nm

Front female trunnion Mod. H and C-H

Material: Aluminium

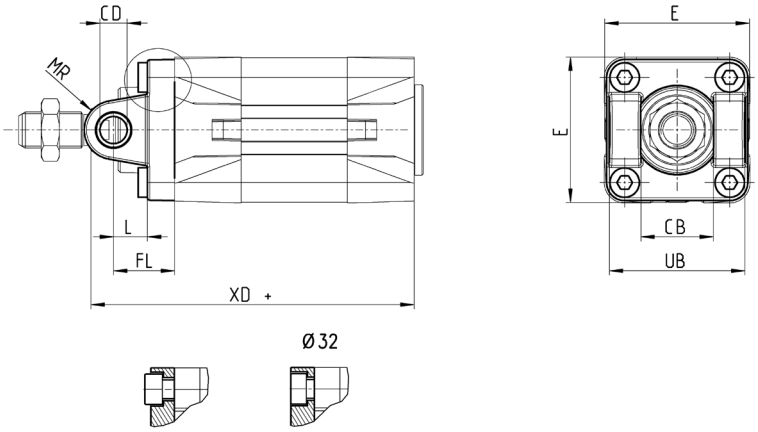

Supplied with:
1x female trunnion
4x screws

+ = add the stroke

Mod.	Ø	CB	UB	E	XD+	FL	L	CD	MR	torque force
H-41-32	32	26	46.5	47	120	22	12.5	10	10	5 Nm
H-41-40	40	28	52	52	135	25	16	12	12	5 Nm
H-41-50	50	32	60	64	143	27	16	12	12	10 Nm
H-60-63	63	40	70	74	158	32	21	16	16	10 Nm
C-H-41-80	80	50	90	94	174	36	22	16	16	15 Nm
C-H-41-100	100	60	110	114	189	41	27	20	20	15 Nm
C-H-41-125	125	70	130	140	225	50	30	25	25	20 Nm

Rear male trunnion Mod. L

Material: Aluminium

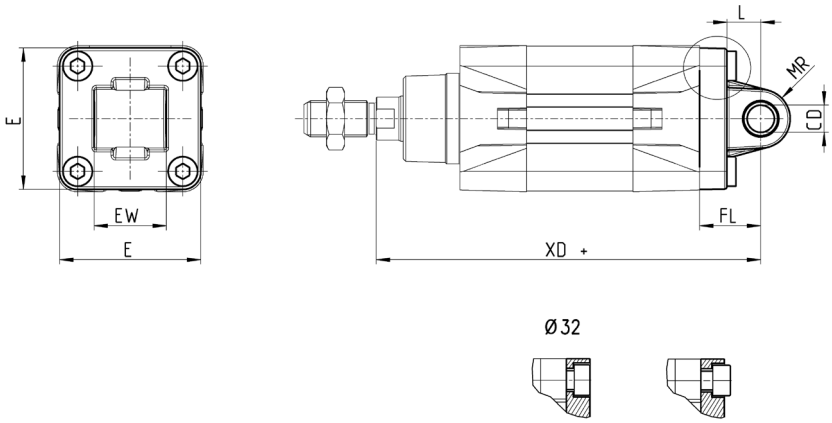

Supplied with:
1x male trunnion
4x screws

+ = add the stroke

DIMENSIONS									
Mod.	Ø	CD	L	FL	XD	MR	E	EW	torque force
L-41-32	32	10	12.5	22	142	10	47	26	5 Nm
L-41-40	40	12	16	25	160	12	52	28	5 Nm
L-41-50	50	12	16	27	170	12	64	32	10 Nm
L-41-63	63	16	21	32	190	15.5	74	40	10 Nm
L-41-80	80	16	22	36	210	16	94	50	15 Nm
L-41-100	100	20	27	41	230	20	114	60	15 Nm
L-41-125	125	25	30	50	275	25	140	70	20 Nm

Centre trunnion Mod. F

Material: zinc-plated steel

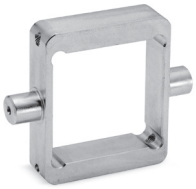

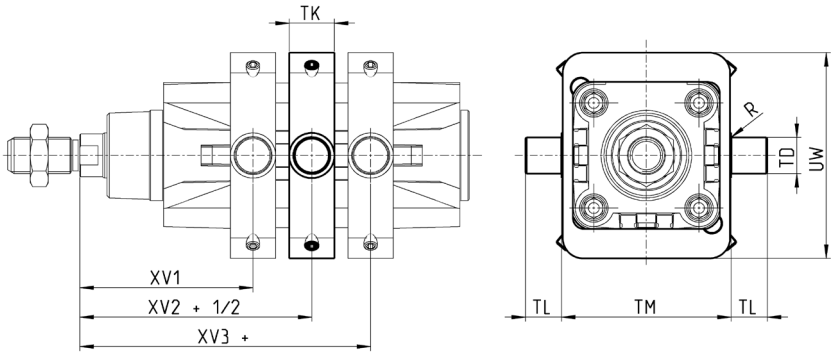

Supplied with:
1x centre trunnion
4x screws
4x fixing elements

+ = add the stroke

DIMENSIONS										
Mod.	Ø	XV1	XV2+	XV3+	TM	TK	TD	TL	UW	R
F-61-32	32	61	73	85	50	18	12	12	65	0,1
F-61-40	40	69	82,5	96	63	20	16	16	75	0,15
F-61-50	50	76,5	90	103,5	75	20	16	16	91	0,15
F-61-63	63	86	97,5	109	90	25	20	20	94	0,15
F-61-80	80	94,5	110	125,5	110	25	20	20	130	0,15
F-61-100	100	104,5	120	135,5	132	30	25	25	145	0,2
F-61-125	125	123	145	167	160	30	25	25	155	0,2

Accessory combination Mod. C+L+S

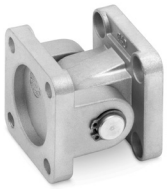

Material: aluminium

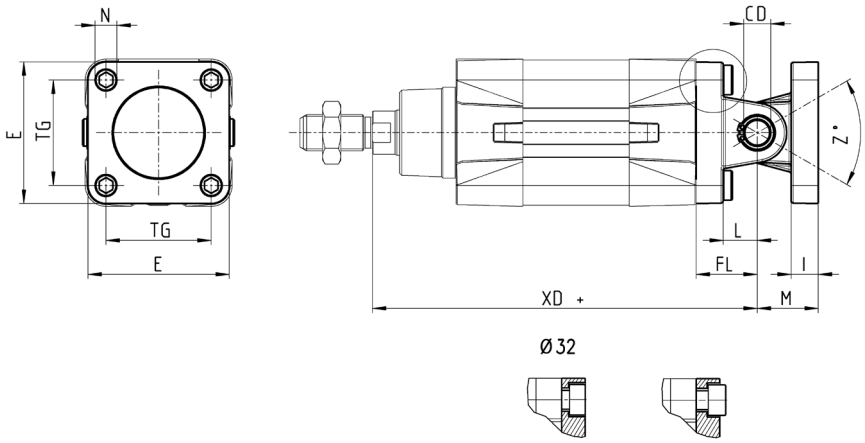

+ = add the stroke

DIMENSIONS												
Mod.	Ø	E	TG	øN	XD+	øCD	L	FL	I	M	Z° (max)	torque force
C+L+S	32	47	32.5	6.5	142	10	12.5	22	9.5	22	30	5 Nm
C+L+S	40	52	38	6.5	160	12	16	25	9	25	40	5 Nm
C+L+S	50	64	46.5	9	170	12	16	27	11	27	25	10 Nm
C+L+S	63	74	56.5	9	190	16	21	32	11	32	36	10 Nm
C+L+S	80	94	72	11	210	16	22	36	14	36	34	15 Nm
C+L+S	100	114	89	11	230	20	27	41	14	41	38	15 Nm
C+L+S	125	140	110	13	275	25	30	50	20	50	30	20 Nm

90° male trunnion Mod. ZC

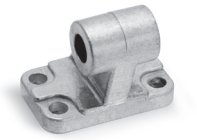

CETOP RP 107P
Material: Aluminium

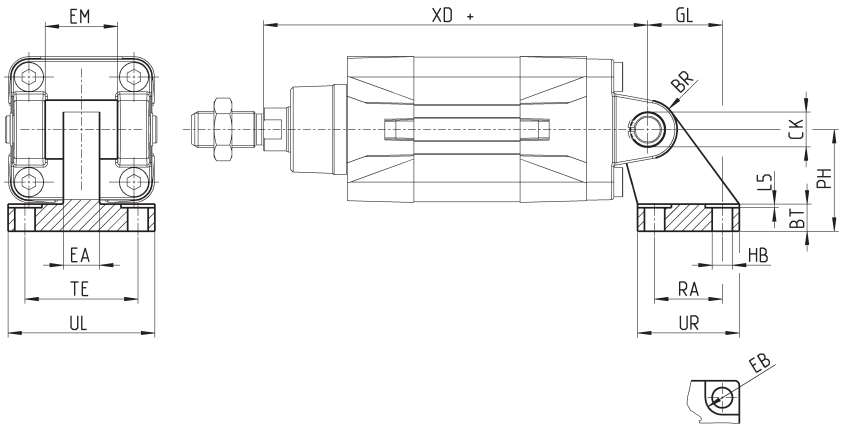

Supplied with:
1x male support

+ = add the stroke

DIMENSIONS																
Mod.	Ø	EB	CK	HB	XD+	TE	UL	EA	GL	L5	RA	EM	UR	PH	BT	BR
ZC-32	32	11	10	6,6	142	38	51	10	21	1,6	18	26	31	32	8	10
ZC-40	40	11	12	6,6	160	41	54	15	24	1,6	22	28	35	36	10	11
ZC-50	50	15	12	9	170	50	65	16	33	1,6	30	32	45	45	12	13
ZC-63	63	15	16	9	190	52	67	16	37	1,6	35	40	50	50	14	15
ZC-80	80	18	16	11	210	66	86	20	47	2,5	40	50	60	63	14	15
ZC-100	100	18	20	11	230	76	96	20	55	2,5	50	60	70	71	17	19
ZC-125	125	20	25	14	275	94	124	30	70	3,2	60	70	90	90	20	22,5

Trunnion ball-joint Mod. R*

* This trunnion doesn't comply with the ISO 15552 standard
Material: Aluminium

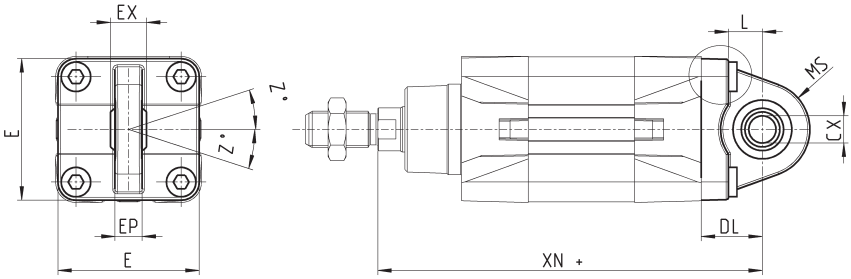

Supplied with:
1x trunnion ball joint
4x screws

+ = add the stroke

Ø R-41-50 / 80 / 125

Mod.	Ø	øCX	L	DL+	XN+	MS	E	EX	EP	Z	torque force
R-41-32	32	10	12	22	142	16	45	14	10.5	4	5 Nm
R-41-40	40	12	15	25	160	19	52	16	12	4	5 Nm
R-41-50*	50	12	15	27	170	21	62.5	16	12	4	10 Nm
R-50	50	16	16	27	170	21.5	65	21	15	4	10 Nm
R-41-63	63	16	20	32	190	24	75	21	15	4	10 Nm
R-41-80*	80	16	24	36	210	28	92	21	15	4	15 Nm
R-80	80	20	22	36	210	28.5	95	25	18	4	15 Nm
R-41-100	100	20	25	41	230	30	115	25	18	4	15 Nm
R-41-125	125	30	30	50	275	40	140	37	25	4	20 Nm

Counter bracket for centre trunnion Mod. BF

Material: Aluminium

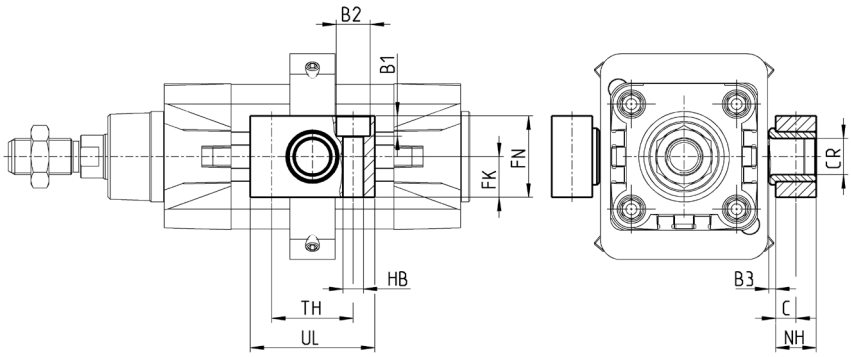

Supplied with:
2x supports

Mod.	Ø	øCR	NH	C	B3	TH	UL	FK	FN	B1	B2	HB
BF-32	32	12	15	7,5	3	32	46	15	30	6,8	11	6,6
BF-40-50	40 - 50	16	18	9	3	36	55	18	36	9	15	9
BF-63-80	63 - 80	20	20	10	3	42	65	20	40	11	18	11
BF-100-125	100 - 125	25	25	12,5	3,5	50	75	25	50	13	20	14

Accessory to mount valves on the cylinder

The mounting sub-base Mod. PCV enables the valve or solenoid valve to be mounted directly on the cylinder.

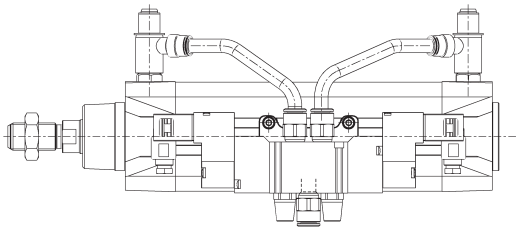

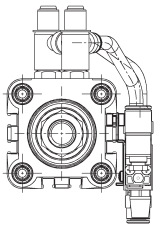

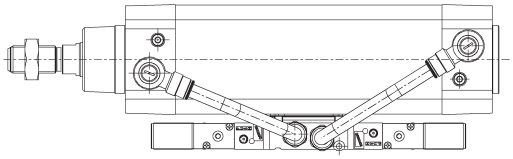

DIMENSIONS	
Mod.	
PCV-61-K3	to connect valves - solenoid valves Series 3
PCV-61-K4	to connect valves - solenoid valves Series 4 port G1/4
PCV-62-KEN	to connect valves - solenoid valves Series EN
PCV-61-K8	to connect valves - solenoid valves Series 4 port G1/8 and Series 3 port G1/4

Clevis pin Mod. S

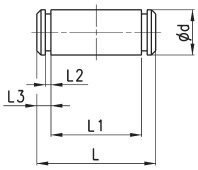

Supplied with:
1x clevis pin in
stainless steel 303
2x Seeger in steel

DIMENSIONS						
Mod.	Ø	d	L	L1	L2	L3
S-32	32	10	52	46	1,1	3
S-40	40	12	59	53	1,1	3
S-50	50	12	67	61	1,1	3
S-63	63	16	77	71	1,1	3
S-80	80	16	97	91	1,1	3
S-100	100	20	121	111	1,3	5
S-125	125	25	140,5	132	1,3	4,25

Swivel ball joint Mod. GA

ISO 8139.
Material: zinc-plated steel.

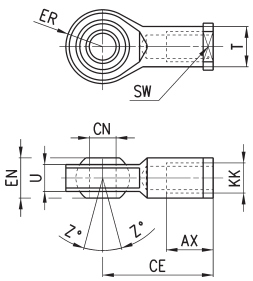

Mod.	øCN(H7)	U	EN	ER	AX	CE	KK	øT	Z	SW
GA-32	10	10,5	14	14	20	43	M10X1,25	15	6,5	17
GA-40	12	12	16	16	22	50	M12X1,25	17,5	6,5	19
GA-50-63	16	15	21	21	28	64	M16X1,5	22	7,5	22
GA-80-100	20	18	25	25	33	77	M20x1,5	27,5	7	30
GA-41-125	30	25	37	37	51	110	M27x2	40	7,5	41

Piston rod socket joint Mod. GY

Material: zama and zinc-plated steel.

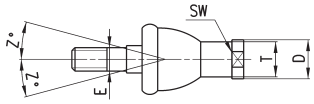

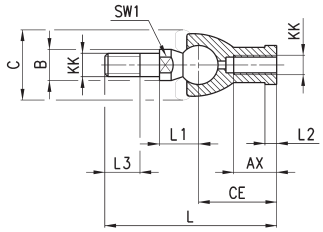

DIMENSIONS

Mod.	Ø	KK	L	CE	L2	AX	SW	SW1	L1	L3	øT	øD	E	øB	øC	Z
GY-32	32	M10X1,25	74	35	6,5	18	17	11	19,5	15	15	19	10	14	28	15
GY-40	40	M12X1,25	84	40	6,5	20	19	17	21	17	17,5	22	12	19	32	15
GY-50-63	50-63	M16X1,5	112	50	8	27	22	19	27,5	23	22	27	16	22	40	11
GY-80-100	80-100	M20x1,5	133	63	10	38	30	24	31,5	25	27,5	34	20	27	45	7,5

Rod fork end Mod. G

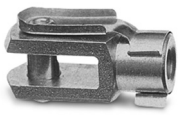

ISO 8140
Material: zinc-plated steel

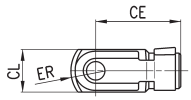

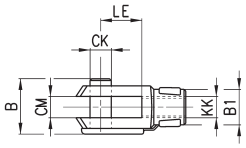

Mod.	øCK	LE	CM	CL	ER	CE	KK	B	øB1
G-25-32	10	20	10	20	12	40	M10 X 1,25	26	18
G-40	12	24	12	24	14	48	M12 X 1,25	32	20
G-50-63	16	32	16	32	19	64	M16 X 1,5	40	26
G-80-100	20	40	20	40	25	80	M20 X 1,5	48	34
G-41-125	30	54	30	55	38	110	M27 X 2	74	48

Piston rod lock nut Mod. U

ISO 4035
Material: zinc-plated steel.

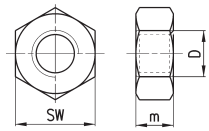

Mod.	D	m	SW
U-25-32	M10X1,25	6	17
U-40	M12X1,25	7	19
U-50-63	M16X1,5	8	24
U-80-100	M20x1,5	9	30
U-41-125	M27x2	12	41

Self aligning rod Mod. GK

Material: zinc-plated steel.

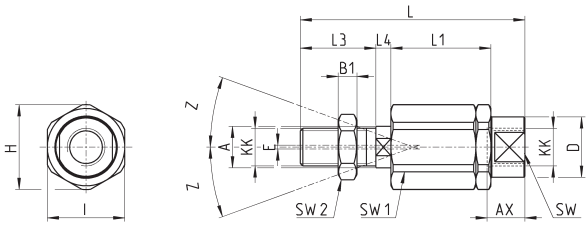

DIMENSIONS																	
Mod.	Ø	KK	L	L1	L3	L4	ØA	ØD	H	I	SW	SW1	SW2	B1	AX	Z	E
GK-25-32	25-32	M10x1,25	71,5	35	20	7,5	14	22	32	30	19	12	17	5	22	4	2
GK-40	40	M12x1,25	75,5	35	24	7,5	14	22	32	30	19	12	19	6	22	4	2
GK-50-63	50-63	M16x1,5	104	53	32	10	22	32	45	41	27	20	24	8	30	3	2
GK-80-100	80-100	M20x1,5	119	53	40	10	22	32	45	41	27	20	30	10	37	3	2
GK-125	125	M27x2	147	60	54	10	32	57	70	65	54	24	41	12	48	4	2

Coupling piece Mod. GKF

Material: zinc-plated steel.

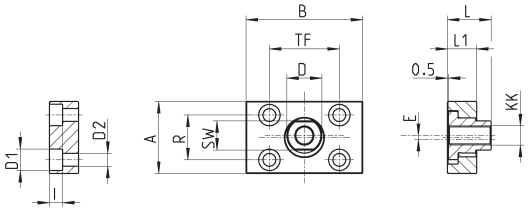

DIMENSIONS														
Mod.	Ø	KK	A	B	R	TF	L	L1	I	Ø D	Ø D1	Ø D2	SW	E
GKF-25-32	32	M10x1,25	37	60	23	36	22,5	15	6,8	18	11	6,6	15	2
GKF-40	40	M12x1,25	56	60	38	42	22,5	15	9	20	15	9	15	2,5
GKF-50-63	50-63	M16x1,5	80	80	58	58	26,5	15	10,5	25	18	11	22	2,5
GKF-80-100	80-100	M20x1,5	90	90	65	65	32,5	20	13	30,5	20	14	27	2,5
GKF-125	125	M27x2	90	90	65	65	35,5	20	13	40	20	14	36	4

Special key to disassemble cylinders Ø 80 and 100

Material: hardened steel

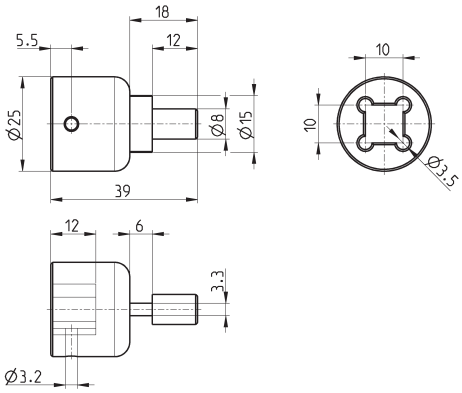

Mod.
80-62/8C

Series 6PF
Positioning Feedback cylinders

Double-acting low friction, magnetic
ø 50, 63, 80, 100, 125 mm

- In compliance with ISO 15552 standards and with the previous DIN/ISO 6431 - VDMA 24562 standards
- Chrome plated steel rod
- Protection class IP67
- Minimal sliding speed of 5 mm/sec
- Minimal sliding pressure < 0,1 bar
- G variant for dusty applications (cement, resin, mud, residues from wood, etc...)
- ATEX version available

Series 6PF pneumatic actuators are equipped with a potentiometric linear position transducer integrated inside the rod. This type of cylinder allows, along the entire stroke, a constant control of the rod position which is read processing the change of the transducer internal resistance.
The pistons have been equipped with a permanent magnet which enables the use of external end-stroke sensors.
The dynamic seals are specific for low friction.

Thanks to the electrical connection, realized by means of an M12 male electric round connector positioned on the rear head, these cylinders fulfil the standards of IP67 protection class.
Series 6PF cylinders comply with the ISO 15552 standards and can be assembled with the entire range of standard accessories. They are available with bores from 50mm to 125mm with standard strokes from 50mm to 500mm with intervals of 50mm.
The sturdy design, the flexible installation and the high performance make Series 6PF suitable for use in applications with tensioning cylinders, positioning cylinders and filling, cutting and measuring systems.

GENERAL AND TECHNICAL DATA

PNEUMATIC SECTION	
Construction	inner tie-rods
Operation	double-acting low friction, not cushioned
Materials	see the table on the following page
Mountings	front and rear flange foot mounts front / rear / swivel / intermediate trunnion
Bores	50, 63, 80, 100, 125 mm
Strokes (min - max)	50 ÷ 1000 mm (step 50 mm)
Operating Temperature	0°C ÷ 80°C (with dry air -20°C)
Operating pressure	0.1 ÷ 10 bar
Speed (min - max)	5 ÷ 1000 mm/sec (no load)
Max acceleration	10 m/sec^2
Media	filtered air class 5.4.4 according to ISO 8573-1. If lubricated air is used, it is recommended to use oil ISOVG32. Once applied the lubrication should never be interrupted.
Linearity	0.1% of the stroke
Repeatability	0.03% of the stroke
Resolution	Infinite
Hysteresis	< di 0.5 mm
Vibration test according EN 60068-2-6	severity level 3
Shock test according EN 60068-2-27	severity level 2
ELECTRICAL SECTION	
Electrical connection	male connector M12 4 poles IP 67 (EN 60529)
Max input voltage	40 V (stroke 50 mm) 60 V (strokes from 100 to 500 mm)
Max recommended cursor current	< di 0,1 µA
Electrical resistance	5 kohm for strokes from 50 to 300 mm 10 kohm for strokes from 350 to 500 m
Tolerance on resistance	+/- 20%
Max dissipation (40°C)	1 W for stroke 50 mm 2 W for stroke 100 mm 3 W for strokes from 150 to 500 mm
Suitable end-stroke sensors	CST-532 (3 wires) CST-562 (M8)
Suitable M12 connectors	CS-LF04HB (connecteur droit femelle 4 pôles) CS-LR04HB (connecteur femelle à angle droit 4 pôles) CS-LF05HB-D200 (connecteur filaire femelle droit, 5 pôles, 2 mètres) ** CS-LF05HB-D500 (connecteur filaire femelle droit, 5 pôles, 5 mètres) ** CS-LR05HB-D200 (connecteur coudé à angle droit, femelle, 5 pôles, 2 mètres) ** CS-LR05HB-D500 (connecteur filaire femelle à angle droit 5 pôles, 5 mètres) ** ** la broche n ° 5 ne doit pas être connectée

STANDARD STROKES FOR SERIES 6PF CYLINDERS

✖ = Double-acting, low friction

STANDARD STROKES																				
Ø	50	100	150	200	250	300	350	400	450	500	550	600	650	700	750	800	850	900	950	1000
50	✖	✖	✖	✖	✖	✖	✖	✖	✖	✖	✖	✖	✖	✖	✖	✖	✖	✖	✖	✖
63	✖	✖	✖	✖	✖	✖	✖	✖	✖	✖	✖	✖	✖	✖	✖	✖	✖	✖	✖	✖
80	✖	✖	✖	✖	✖	✖	✖	✖	✖	✖	✖	✖	✖	✖	✖	✖	✖	✖	✖	✖
100	✖	✖	✖	✖	✖	✖	✖	✖	✖	✖	✖	✖	✖	✖	✖	✖	✖	✖	✖	✖
125	✖	✖	✖	✖	✖	✖	✖	✖	✖	✖	✖	✖	✖	✖	✖	✖	✖	✖	✖	✖

CODING EXAMPLE

6PF	3	P	050	A	0200

6PF	SERIES	
3	OPERATION: 3 = double-acting low friction, no cushion	PNEUMATIC SYMBOLS CD22
P	MATERIALS: P = see the table on the following page	
050	BORES: 050 = 50 mm 063 = 63 mm 080 = 80 mm 100 = 100 mm 125 = 125 mm	
A	CONSTRUCTION: A = standard with rod nut RL = cylinder with rod lock	
0200	STROKES (see the table)	
	VERSIONS: = standard P = PU rod seal V = FKM rod seal L = without rod seal (rear supply only) * G = with brass rod scraper EX = ATEX (_ _ _) = extended piston rod _ _ _ mm * The possibility to order the cylinder without piston rod seal further reduces the friction force.	

PNEUMATIC SYMBOLS

The pneumatic symbols which have been indicated in the CODING EXAMPLE are shown below.

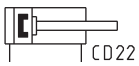

GENERAL INFORMATION

To function properly, the potentiometer must be used as a voltage divider and not as a variable resistor.
The measurement must be carried out detecting the voltage and not the resistance.
The electrical connection must be done at an high impedance inlet.
Information about pinout can be found in the instruction sheet or on the product itself.

NOTE TO THE CONNECTOR DRAWING:
1, 3 = inlet voltage
4 = outlet signal
2 = not used

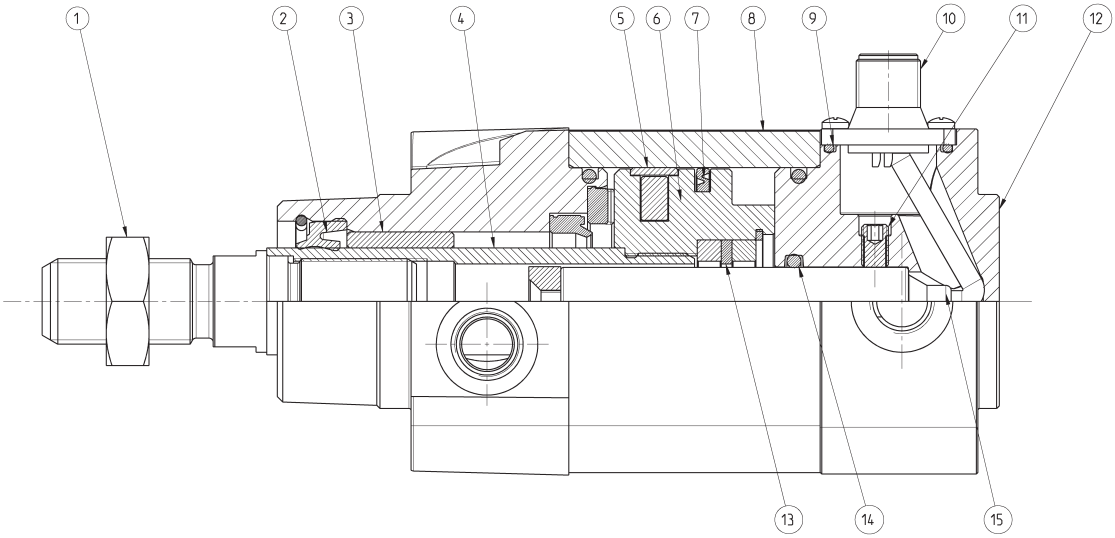

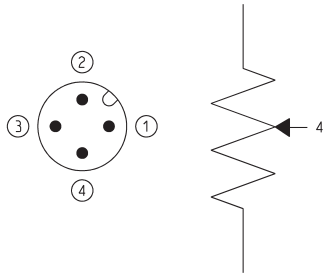

LIST OF COMPONENTS	
PARTS	MATERIALS
1. Rod nut	Steel
2. Rod seal	NBR
3. Rod guide bush	Sintered bronze
4. Rod	Chrome plated steel
5. Piston guide element	Acetal resin
6. Piston	Aluminium
7. Piston seal	NBR
8. Extrusion profile	Anodized aluminium
9. OR seal	NBR
10. M12 connector	Nickel plated brass
11. Grain	Steel
12. Rear endcap	Aluminium
13. Magnetic actuator	Neodymium
14. OR seal	NBR
15. Positioning sensor	-

CYLINDERS ACCESSORIES SERIES 6PF

Piston rod socket joint
Mod. GY

Piston rod lock nut
Mod. U

Clevis pin Mod. S

Rear trunnion ball-joint
Mod. R

Coupling piece
Mod. GKF

Swivel ball joint Mod. GA

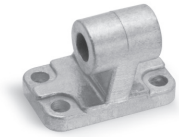

90° male trunnion
Mod. ZC

Swivel Combination
Mod. C+L+S

Front and rear flange
Mod. D-E

Self aligning rod
Mod. GK

Centre trunnion Mod. F

Foot mount Mod. B

Front female trunnion
Mod. H and C-H

Rear female trunnion
Mod. C and C-H

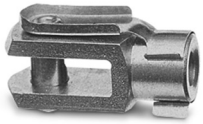

Rod fork end Mod. G

Rear trunnion male Mod. L

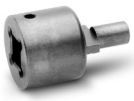

Key to disassemble
cylinders Ø 80 and 100

Counter bracket for centre
trunnion Mod. BF

Straight conn. for power
supply Mod. CS-LF04HB

Angular conn. for power
supply Mod. CS-LR04HB

Cable
Mod. CS-LF05HB-D...

Cable
Mod. CS-LR05HB-D...

All accessories are supplied separately, except for piston rod lock nut Mod. U

Series 6PF cylinders

+ = add the stroke

Table note:
* = special key 80-62/8C
(see accessories)

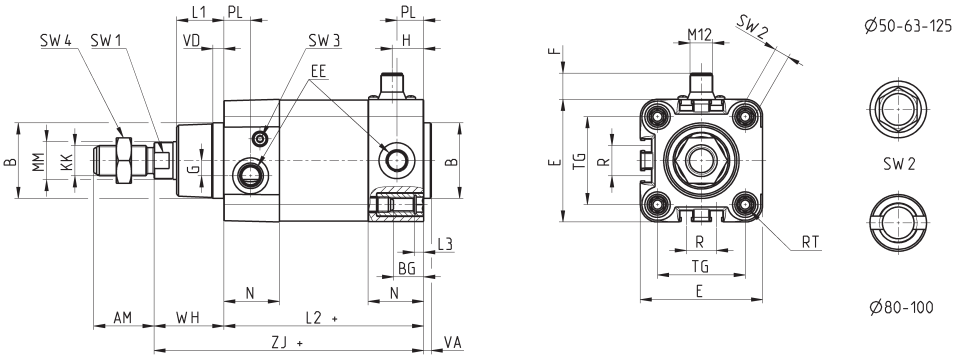

DIMENSIONS																									
Ø	AM	B	BG	E	EE	F	G	H	KK	L1	L2+	L3	MM	N	PL	R	RT	SW1	SW2	SW3	SW4	TG	VA	VD	WH	ZJ+
50	32	40	16	64.5	G1/4	14	8	17	M16x1.5	25	106	5	20	29.5	15	16	M8	17	8	3	24	46.5	4	6	37	143
63	32	45	16	75	G3/8	14	8	24	M16x1.5	26	121	5	20	36.5	21	28	M8	17	8	3	24	56.5	4	6	37	158
80	40	45	19	93	G3/8	14	8	24	M20x1.5	30	128	0	25	36	21	30	M10	22	*	5	30	72	4	7	46	174
100	40	55	19.5	110	G1/2	14	8	26	M20x1.5	35	138	0	25	38.5	23	40	M10	22	*	5	30	89	4	7	51	189
125	54	60	23	135	G1/2	14	10.5	30	M27x2	42	160	0	32	43	23.5	50	M12	27	12	4	41	110	6	8	65	225

Series 6PF cylinders - with rod lock

+ = add the stroke

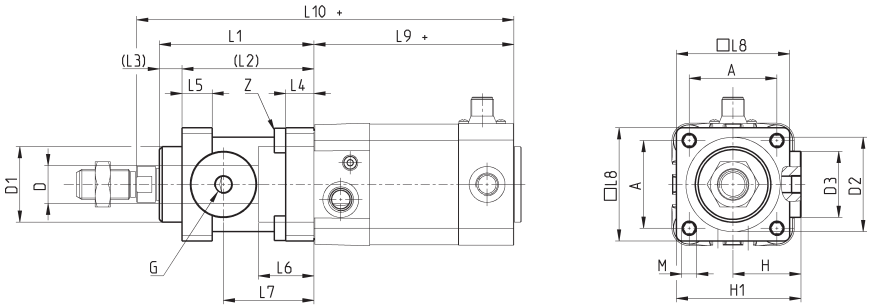

DIMENSIONS																			
Ø	øD	øD1	øD2	øD3	A	G	H	H1	L1	L2	L3	L4	L5	L6	L7	L8	L9+	L10+	M	Z
50	20	40	50	35	46,5	G1/8	36	64	82	70	12	15	16	29,5	48	60	106	200	M8	M6x20
63	20	45	60	38	56,5	G1/8	40	75	82	70	12	15	16	29,5	49,5	70	121	215	M8	M8x30
80	25	45	80	48	72	G1/8	50	95	110	90	20	18	20	35	61	90	128	254	M10	M10x35
100	25	55	100	58	89	G1/8	58	110,5	115	100	15	18	20	39	69	105	138	269	M10	M10x35
125	32	60	130	65	110	G1/8	80	150	167	122	45	22	30	51	86,5	140	160	350	M12	M12x40

Foot mount Mod. B

Material: zinc-plated steel

Supplied with:
2x feet
4x screws

+ = add the stroke

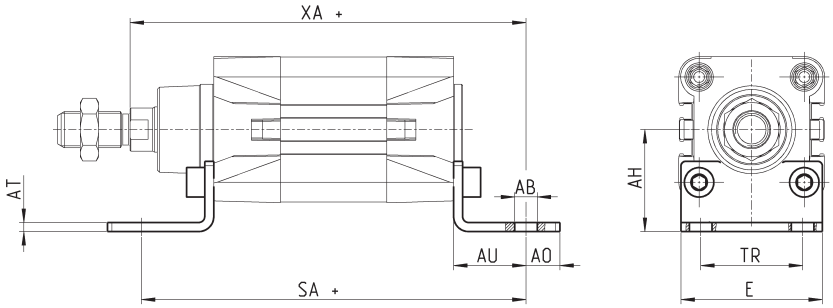

DIMENSIONS											
Mod.	Ø	AT	SA+	XA+	TR	E	AB	AH	AO	AU	torque force
B-41-50	50	4	170	175	45	62,5	10	45	15	32	13 Nm
B-41-63	63	5	185	190	50	73	10	50	15	32	13 Nm
B-41-80	80	6	210	216	63	92	12	63	20	41	19 Nm
B-41-100	100	6	220	230	75	108,5	14,5	71	25	41	22 Nm
B-41-125	125	7	250	270	90	132	16,5	90	25	45	26 Nm

Front and rear flange Mod. D-E

Material: Aluminium

Supplied with:
1x flange
4x screws

+ = add the stroke

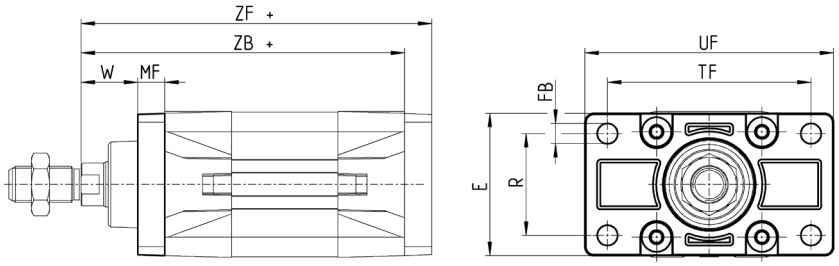

Mod.	Ø	W	MF	ZB	TF	R	UF	E	FB	ZF	torque force
D-E-41-50	50	25	12	143	90	45	110	65	9	155	13 Nm
D-E-41-63	63	25	12	158	100	50	120	75	9	170	13 Nm
D-E-41-80	80	30	16	174	126	63	148	95	12	190	19 Nm
D-E-41-100	100	35	16	189	150	75	176	115	14	205	22 Nm
D-E-41-125	125	45	20	225	180	90	220	140	16	245	26 Nm

Rear female trunnion Mod. C and C-H

Material: Aluminium

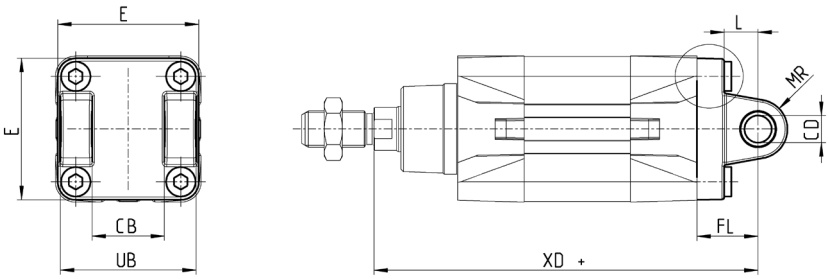

Supplied with:
1x female trunnion
4x screws

+ = add the stroke

Mod.	Ø	CD	L	FL	XD	MR	E	CB	UB	torque force
C-41-50	50	12	16	27	170	12	64	32	60	13 Nm
C-H-41-63	63	16	21	32	190	16	74	40	70	13 Nm
C-H-41-80	80	16	22	36	210	16	94	50	90	19 Nm
C-H-41-100	100	20	27	41	230	20	114	60	110	22 Nm
C-H-41-125	125	25	30	50	275	25	140	70	130	26 Nm

Front female trunnion Mod. H and C-H

Material: Aluminium

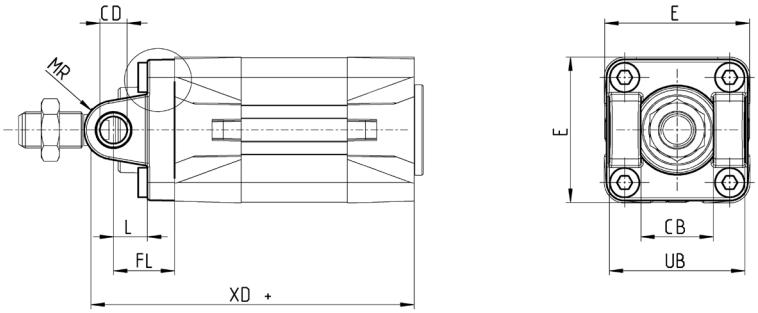

Supplied with:
1x female trunnion
4x screws

+ = add the stroke

Mod.	Ø	CB	UB	E	XD+	FL	L	CD	MR	torque force
H-41-50	50	32	60	64	143	27	16	12	12	13 Nm
H-60-63	63	40	70	74	158	32	21	16	16	13 Nm
C-H-41-80	80	50	90	94	174	36	22	16	16	19 Nm
C-H-41-100	100	60	110	114	189	41	27	20	20	22 Nm
C-H-41-125	125	70	130	140	225	50	30	25	25	26 Nm

Rear male trunnion Mod. L

Material: Aluminium

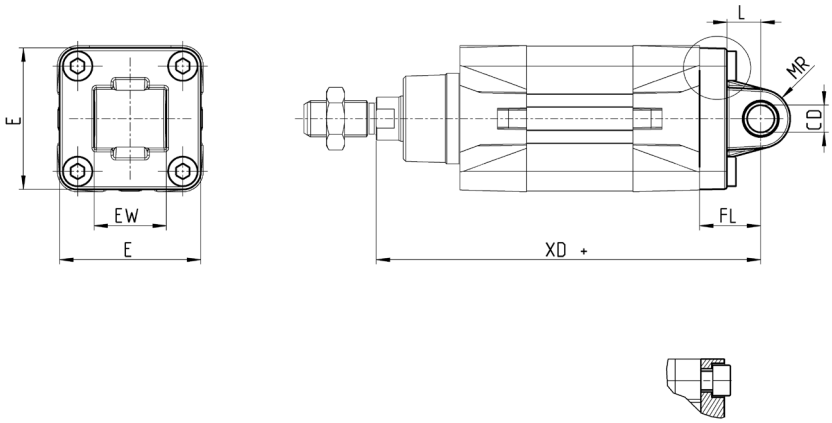

Supplied with:
1x male trunnion
4x screws

+ = add the stroke

DIMENSIONS									
Mod.	Ø	CD	L	FL	XD	MR	E	EW	torque force
L-41-50	50	12	16	27	170	12	64	32	13 Nm
L-41-63	63	16	21	32	190	15.5	74	40	13 Nm
L-41-80	80	16	22	36	210	16	94	50	19 Nm
L-41-100	100	20	27	41	230	20	114	60	22 Nm
L-41-125	125	25	30	50	275	25	140	70	26 Nm

Centre trunnion Mod. F

Material: zinc-plated steel

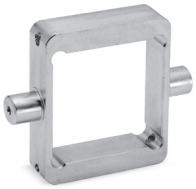

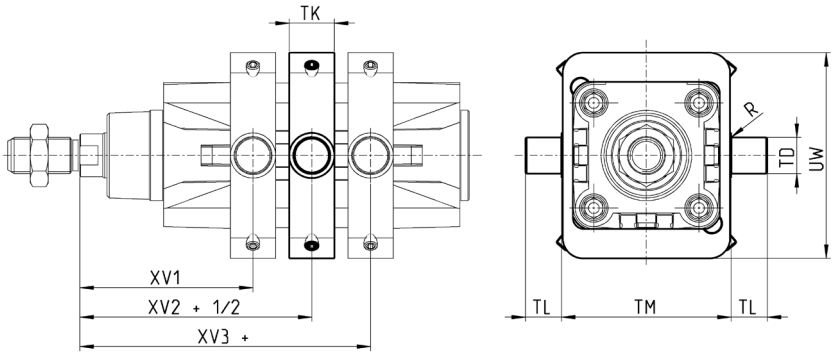

Supplied with:
1x centre trunnion
4x screws
4x fixing elements

+ = add the stroke

DIMENSIONS										
Mod.	Ø	XV1	XV2+	XV3+	TM	TK	TD	TL	UW	R
F-61-50	50	76,5	90	103,5	75	20	16	16	91	0,15
F-61-63	63	86	97,5	109	90	25	20	20	94	0,15
F-61-80	80	94,5	110	125,5	110	25	20	20	130	0,15
F-61-100	100	104,5	120	135,5	132	30	25	25	145	0,2
F-61-125	125	123	145	167	160	30	25	25	155	0,2

Accessory combination Mod. C+L+S

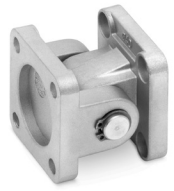

Material: aluminium

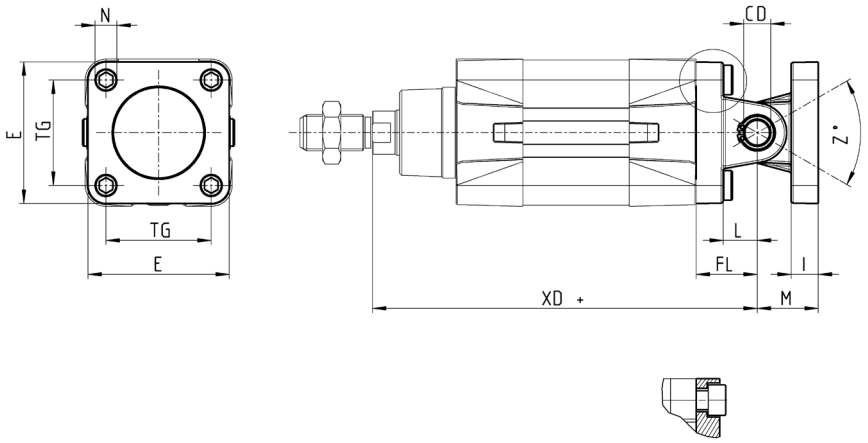

+ = add the stroke

DIMENSIONS											
Mod.	Ø	øCD	L	FL	XD+	TG	E	I	M	øN	torque force
C+L+S	50	12	16	27	170	46,5	64	11	27	9	13 Nm
C+L+S	63	16	21	32	190	56,5	74	11	32	9	13 Nm
C+L+S	80	16	22	36	210	72	94	14	36	11	19 Nm
C+L+S	100	20	27	41	230	89	114	14	41	11	22 Nm
C+L+S	125	25	30	50	275	110	140	20	50	13	26 Nm

90° male trunnion Mod. ZC

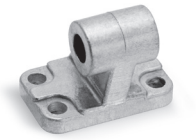

CETOP RP 107P
Material: Aluminium

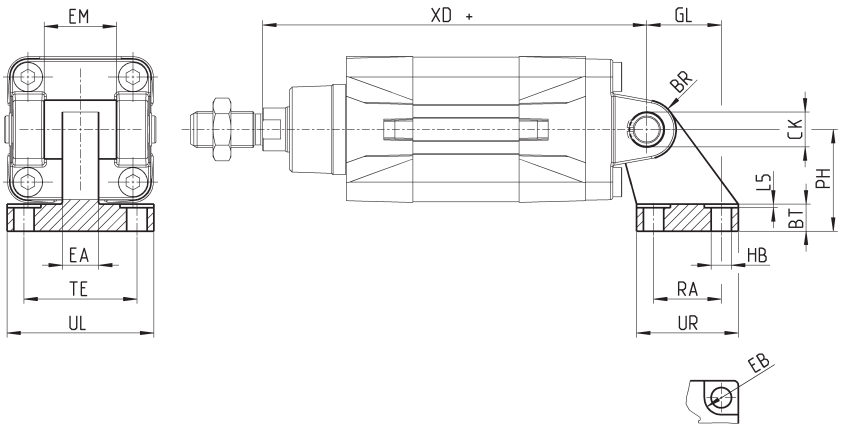

Supplied with:
1x male support

+ = add the stroke

DIMENSIONS																
Mod.	Ø	EB	CK	HB	XD+	TE	UL	EA	GL	L5	RA	EM	UR	PH	BT	BR
ZC-50	50	15	12	9	170	50	65	16	33	1,6	30	32	45	45	12	13
ZC-63	63	15	16	9	190	52	67	16	37	1,6	35	40	50	50	14	15
ZC-80	80	18	16	11	210	66	86	20	47	2,5	40	50	60	63	14	15
ZC-100	100	18	20	11	230	76	96	20	55	2,5	50	60	70	71	17	19
ZC-125	125	20	25	14	275	94	124	30	70	3,2	60	70	90	90	20	22,5

Trunnion ball-joint Mod. R

* This trunnion doesn't comply with the ISO 15552 standard
Material: Aluminium

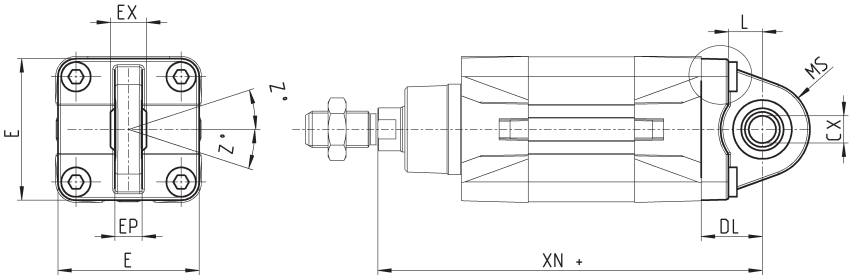

Supplied with:
1x trunnion ball joint
4x screws

+ = add the stroke

Ø R-41-50 / 80 / 125

Mod.	Ø	øCX	L	DL+	XN+	MS	E	EX	EP	Z	torque force
R-41-50*	50	12	15	27	170	21	62.5	16	12	4	13 Nm
R-50	50	16	16	27	170	21.5	65	21	15	4	10 Nm
R-41-63	63	16	20	32	190	23	75	21	15	4	13 Nm
R-41-80*	80	16	24	36	210	28	92	21	15	4	19 Nm
R-80	80	20	22	36	210	28.5	95	25	18	4	15 Nm
R-41-100	100	20	25	41	230	30	115	25	18	4	22 Nm
R-41-125	125	30	30	50	275	40	140	37	25	4	26 Nm

Counter bracket for centre trunnion Mod. BF

Material: Aluminium

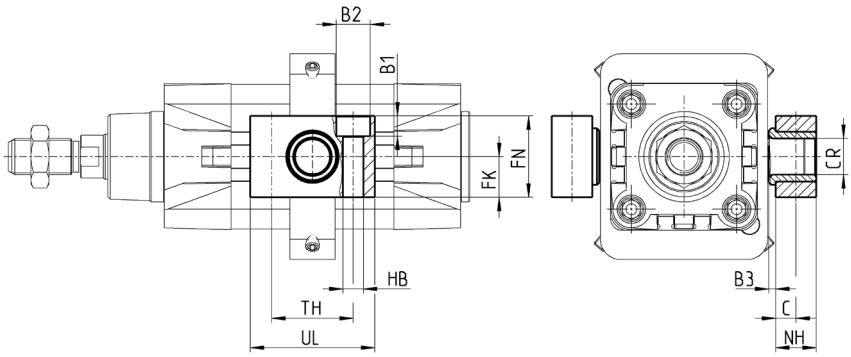

Supplied with:
2x supports

Mod.	Ø	øCR	NH	C	B3	TH	UL	FK	FN	B1	B2	HB
BF-40-50	50	16	18	9	3	36	55	18	36	9	15	9
BF-63-80	63 - 80	20	20	10	3	42	65	20	40	11	18	11
BF-100-125	100 - 125	25	25	12,5	3,5	50	75	25	50	13	20	14

Accessory to mount valves on the cylinder

The mounting sub-base Mod. PCV enables the valve or solenoid valve to be mounted directly on the cylinder.

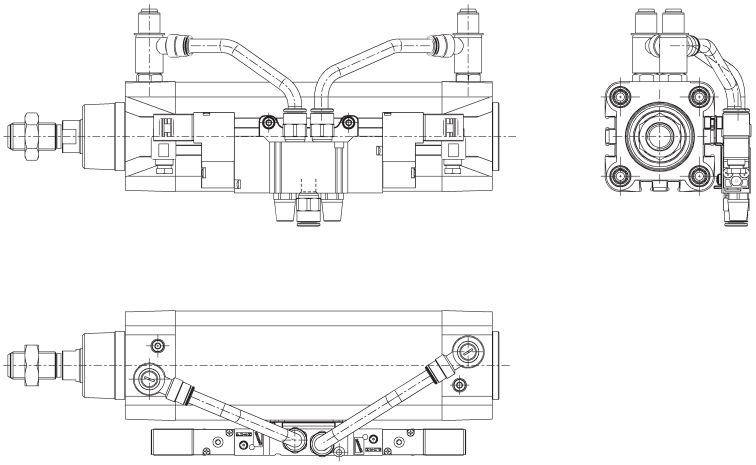

DIMENSIONS	
Mod.	
PCV-61-K3	to connect valves - solenoid valves Series 3
PCV-61-K4	to connect valves - solenoid valves Series 4 port G1/4
PCV-62-KEN	to connect valves - solenoid valves Series EN
PCV-61-K8	to connect valves - solenoid valves Series 4 port G1/8 and Series 3 port G1/4

Clevis pin Mod. S

Materials: Stainless steel 303 (clevis pin) / Steel (Seeger)

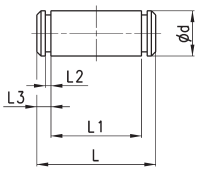

Supplied with:
1x clevis pin
2x Seeger

DIMENSIONS						
Mod.	Ø	d	L	L1	L2	L3
S-50	50	12	67	61	1,1	3
S-63	63	16	77	71	1,1	3
S-80	80	16	97	91	1,1	3
S-100	100	20	121	111	1,3	5
S-125	125	25	140,5	132	1,3	4,25

Swivel ball joint Mod. GA

ISO 8139.
Material: zinc-plated steel.

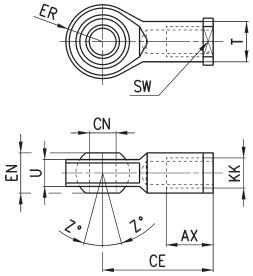

Mod.	øCN(H7)	U	EN	ER	AX	CE	KK	øT	Z	SW
GA-50-63	16	15	21	21	28	64	M16X1,5	22	7,5	22
GA-80-100	20	18	25	25	33	77	M20x1,5	27,5	7	30
GA-41-125	30	25	37	37	51	110	M27x2	40	7,5	41

Piston rod socket joint Mod. GY

Material: zama and zinc-plated steel.

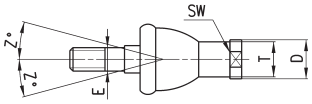

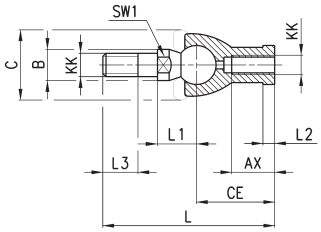

DIMENSIONS																
Mod.	Ø	KK	L	CE	L2	AX	SW	SW1	L1	L3	øT	øD	E	øB	øC	Z
GY-50-63	50-63	M16X1,5	112	50	8	27	22	19	27,5	23	22	27	16	22	40	11
GY-80-100	80-100	M20x1,5	133	63	10	38	30	24	31,5	25	27,5	34	20	27	45	7,5

Rod fork end Mod. G

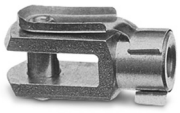

ISO 8140
Material: zinc-plated steel

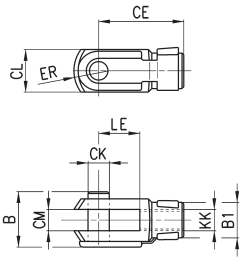

Mod.	øCK	LE	CM	CL	ER	CE	KK	B	øB1
G-50-63	16	32	16	32	19	64	M16 X 1,5	40	26
G-80-100	20	40	20	40	25	80	M20 X 1,5	48	34
G-41-125	30	54	30	55	38	110	M27 X 2	74	48

Piston rod lock nut Mod. U

ISO 4035
Material: zinc-plated steel.

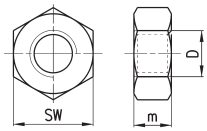

Mod.	D	m	SW
U-50-63	M16X1,5	8	24
U-80-100	M20x1,5	9	30
U-41-125	M27x2	12	41

Self aligning rod Mod. GK

Material: zinc-plated steel.

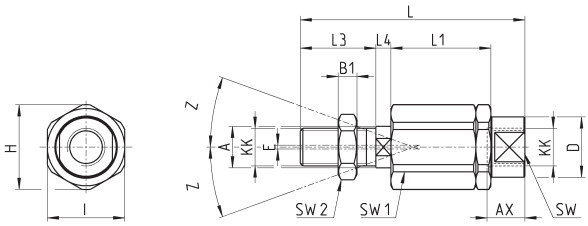

DIMENSIONS																	
Mod.	Ø	KK	L	L1	L3	L4	øA	øD	H	I	SW	SW1	SW2	B1	AX	Z	E
GK-50-63	50-63	M16x1,5	104	53	32	10	22	32	45	41	27	20	24	8	30	3	2
GK-80-100	80-100	M20x1,5	119	53	40	10	22	32	45	41	27	20	30	10	37	3	2
GK-125	125	M27x2	147	60	54	10	32	57	70	65	54	24	41	12	48	4	2

Coupling piece Mod. GKF

Material: zinc-plated steel.

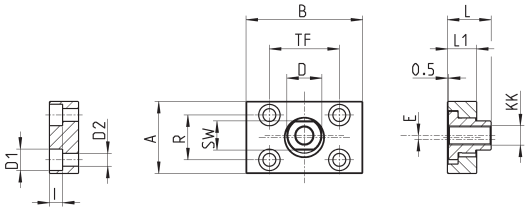

DIMENSIONS														
Mod.	Ø	KK	A	B	R	TF	L	L1	I	Ø D	Ø D1	Ø D2	SW	E
GKF-50-63	50-63	M16x1,5	80	80	58	58	26,5	15	10,5	25	18	11	22	2,5
GKF-80-100	80-100	M20x1,5	90	90	65	65	32,5	20	13	30,5	20	14	27	2,5
GKF-125	125	M27x2	90	90	65	65	35,5	20	13	40	20	14	36	4

Special key to disassemble cylinders Ø 80 and 100

Material: hardened steel

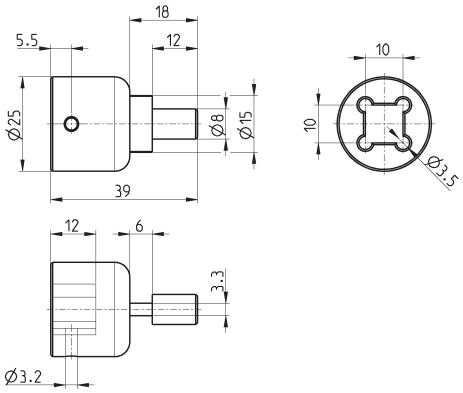

Mod.
80-62/8C

Straight connector for power supply

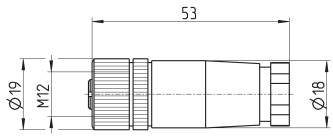

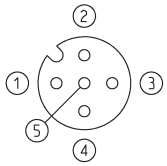

Mod.	description	type of connector	connection		cable length (m)
CS-LF04HB	for wiring	straight	M12 A 4 pin female - is not connected	Pin 5	-

Angular connector for power supply

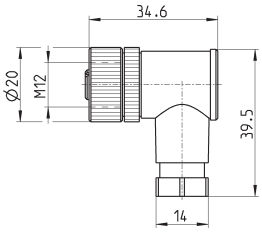

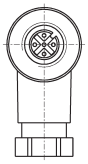

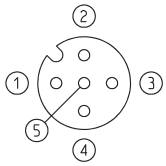

Mod.	description	type of connector	connection		cable length (m)
CS-LR04HB	for wiring	90°	M12 A 4 pin female - is not connected	Pin 5	-

Cable Mod. CS-LF05HB-D200/D500

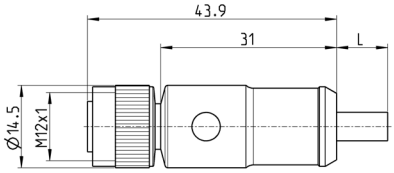

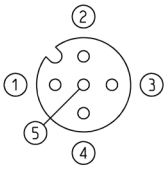

Mod.	Cable length (m)
CS-LF05HB-D200	2
CS-LF05HB-D500	5

Cable Mod. CS-LR05HB-D200/D500

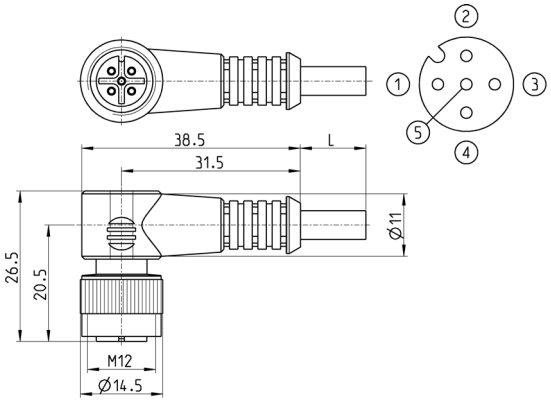

Mod.	Cable length (m)
CS-LR05HB-D200	2
CS-LR05HB-D500	5

Series 32
compact magnetic cylinders

Single and double-acting, non-rotating
ø 20, 25, 32, 40, 50, 63, 80, 100 mm

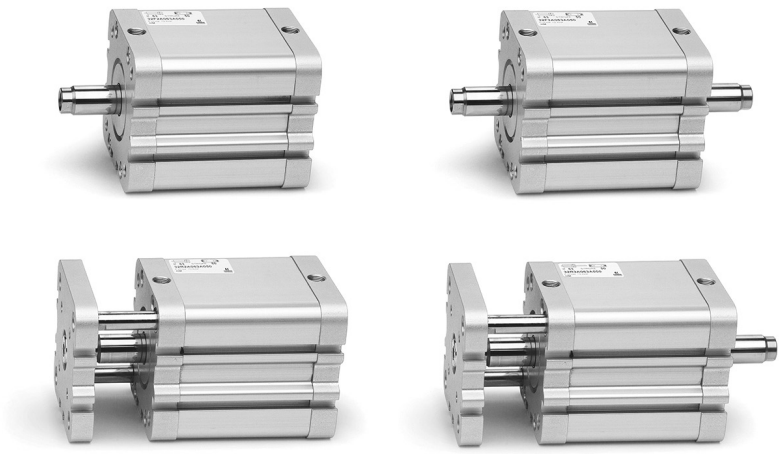

- In compliance with ISO 21287
- Compact design
- Wide range of models available in different diameters

Series 32 cylinders, thanks to their compactness, are suitable for installation in confined spaces. Being in compliance with the ISO 21287 Standard, the cylinders Series 32 have the advantage that they can be used in conjunction with mountings/accessories suitable for other standard cylinders ISO15552.

GENERAL DATA

Construction	compact profile
Operation	single and double acting, magnetic
Design	ISO 21287
Materials	anodized AL body and end-blocks - rolled stainless steel AISI 303 rod anodized AL piston - rod seal, end-block OR and piston seal in PU high temperatures: rod seal, OR end-block and piston in FKM (140°)
Mounting	with threaded holes on the end blocks flange - feet - trunnion
Stroke min and max (1)	Series 32F, 32M, 32R Ø20-25 = 5-300 mm Series 32F, 32M, 32R Ø32-40-50-63 = 5-400 mm Series 32F, 32M, 32R Ø80-100 = 5-500 mm
Operating temperature	0°C ÷ 80°C (with dry air -20°C)
Operating pressure	1 ÷ 10 bar (double-acting) 2 ÷ 10 bar (single-acting)
Fluid	clean air without lubrication. If lubricated air is used it is recommended to use oil ISOVG32. Once applied the lubrication should never be interrupted.
Operation speed	10 ÷ 1000mm/sec. (without load)

(1) the minimum stroke for the use of the sensors is 10 mm.

STANDARD STROKES FOR CYLINDERS SERIES 32

✖ = Non-rotating ● = Double-acting, male/female rod thread;
■ = Single-acting, front/rear spring, male/female rod thread.

STANDARD STROKES										
Ø	5	10	15	20	25	30	40	50	60	80
20	✖ ● ■	✖ ● ■	✖ ● ■	✖ ● ■	✖ ● ■	✖ ●	✖ ●	✖ ●		
25	✖ ● ■	✖ ● ■	✖ ● ■	✖ ● ■	✖ ● ■	✖ ●	✖ ●	✖ ●		
32	✖ ● ■	✖ ● ■	✖ ● ■	✖ ● ■	✖ ● ■	✖ ●	✖ ●	✖ ●	✖ ●	✖ ●
40	✖ ● ■	✖ ● ■	✖ ● ■	✖ ● ■	✖ ● ■	✖ ●	✖ ●	✖ ●	✖ ●	✖ ●
50		✖ ● ■	✖ ● ■	✖ ● ■	✖ ● ■	✖ ●	✖ ●	✖ ●	✖ ●	✖ ●
63		✖ ● ■	✖ ● ■	✖ ● ■	✖ ● ■	✖ ●	✖ ●	✖ ●	✖ ●	✖ ●
80		✖ ● ■	✖ ● ■	✖ ● ■	✖ ● ■	✖ ●	✖ ●	✖ ●	✖ ●	✖ ●
100		✖ ● ■	✖ ● ■	✖ ● ■	✖ ● ■	✖ ●	✖ ●	✖ ●	✖ ●	✖ ●

CODING EXAMPLE

32	M	2	A	032	A	050	

32	SERIES	
M	VERSION M = male rod thread, mounted with rod nut Mod. U F = female rod thread R = antirotation with flange (not for single-acting version)	
2	OPERATION 1 = single-acting, front spring 2 = double-acting 3 = double-acting, through-rod 4 = single-acting, rear spring	PNEUMATIC SYMBOLS CS06 CD08 CD12 CS08
A	MATERIALS A = anodized aluminium body, end blocks and piston, PU seals (rod, end-blocks OR and piston)	
032	BORES 020 = 20 mm - 025 = 25 mm - 032 = 32 mm - 040 = 40 mm 050 = 50 mm - 063 = 63 mm - 080 = 80 mm - 100 = 100 mm	
A	CONSTRUCTION A = standard	
050	STROKE (see the table)	
	= standard V = FKM rod seal W = high temperatures (double-acting, non-magnetic with FKM seals for high temperatures up to 140°C)	

PNEUMATIC SYMBOLS

The pneumatic symbols which have been indicated in the CODING EXAMPLE are shown below.

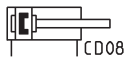

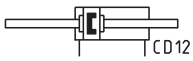

ACCESSORIES FOR CYLINDERS SERIES 32

Piston rod socket joint
Mod. GY

Piston rod lock nut
Mod. U

Clevis pin Mod. S

Rear trunnion ball-joint
Mod. R

Coupling piece
Mod. GKF

Swivel ball joint Mod. GA

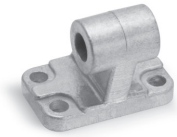

90° male trunnion
Mod. ZC

Swivel combination
Mod. C+L+S

Front and rear flange Mod.
D-E

Self aligning rod
Mod. GK

90° swivel combination
for trunnion Mod. I

Foot mount Mod. B

Front female trunnion
Mod. H and C-H

Rear female trunnion
Mod. C and C-H

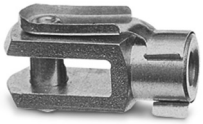

Rod fork end Mod. G

Rear trunnion male
Mod. L

Centring sleeve Mod. TR

All accessories are supplied separately.

APPLICABLE LOADS

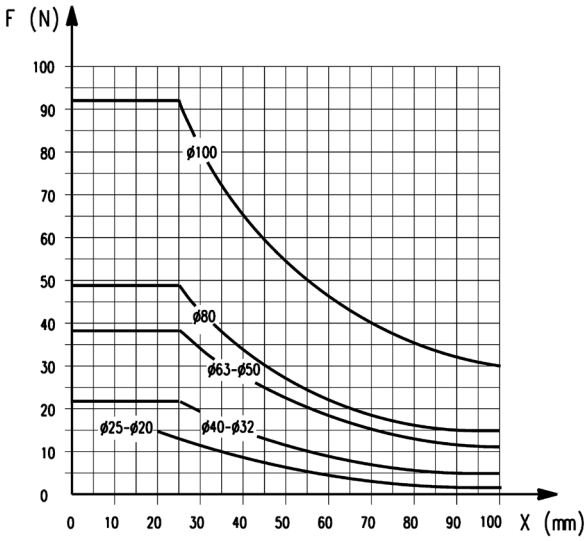

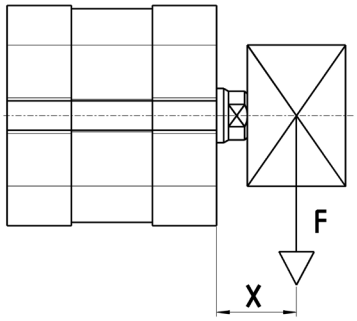

Standard.
Transversal load (F) dependant on stroke (X)

APPLICABLE LOADS

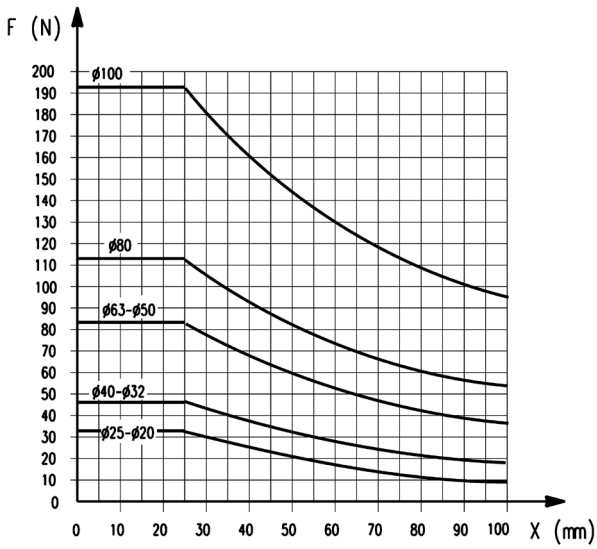

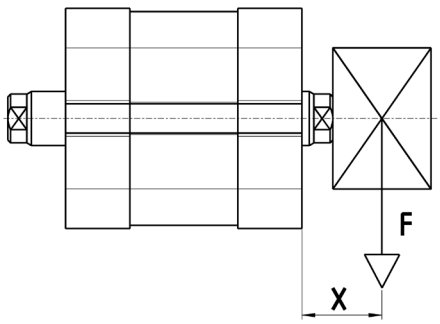

Through-rod.
Transversal load (F) dependant on stroke (X)

APPLICABLE LOADS

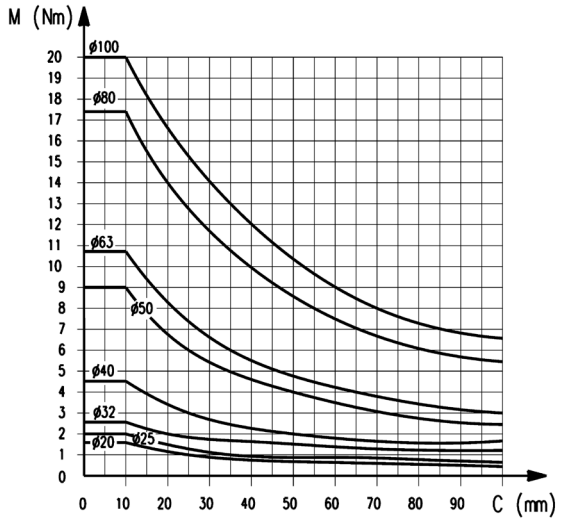

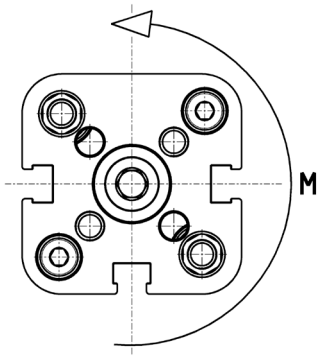

It is possible to use longer strokes as indicated in the general data (excluding radial loads and torque moments). When imposing radial loads on the cylinder it is important to respect the maximum stroke of the centre of gravity. In the presence of torque moments, respect the maximum stroke as shown in the diagrams.

Torque moment (M) dependant on stroke (C).

APPLICABLE LOADS

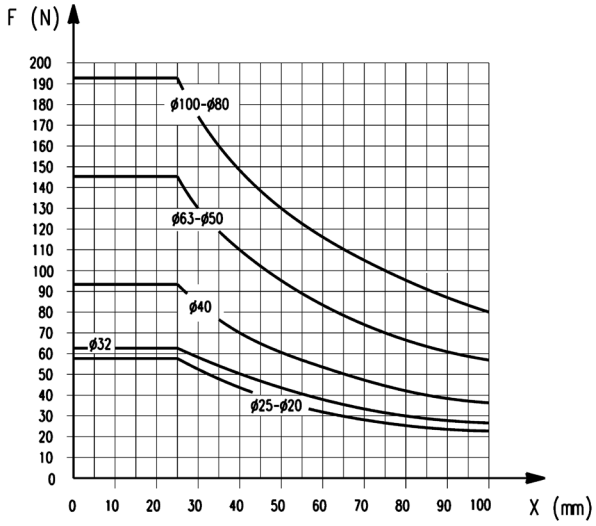

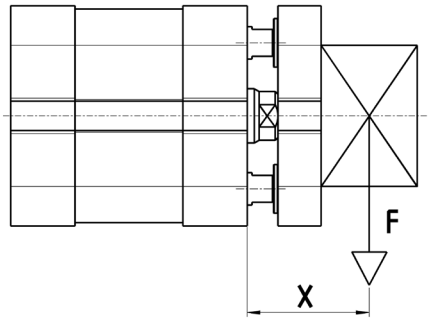

Anti-rotation.
Transversal load (F) dependant on stroke (X).

APPLICABLE LOADS

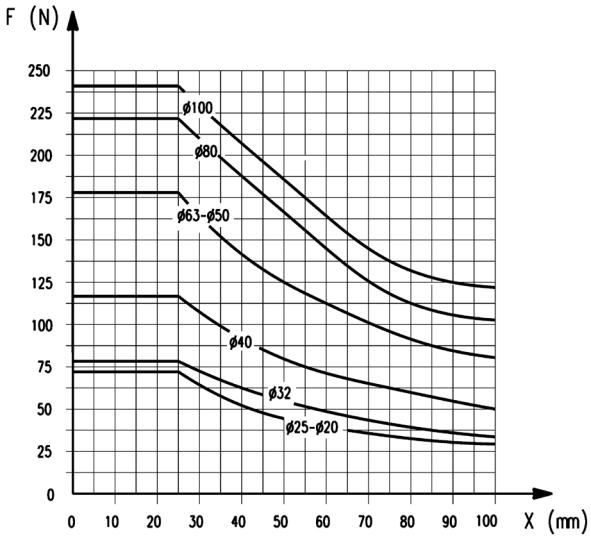

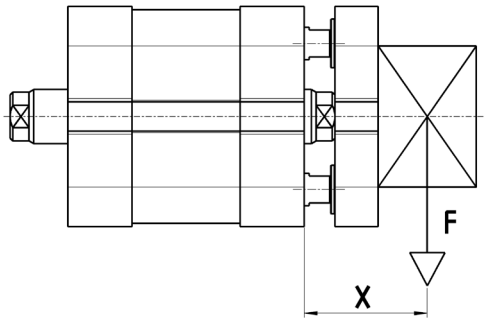

Anti-rotation through-rod.
Transversal load (F) dependant on stroke (X).

MOUNTING EXAMPLE

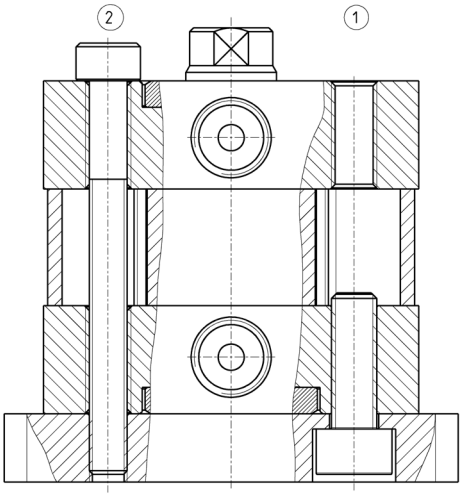

Mounting example for mounting cylinders Ø 32; 40; 50; 63; 80; 100.
1 = Rear mounting
2 = Through mounting

N.B. For through mounting with screws through the cylinder it is recommended to use non-magnetic screws.

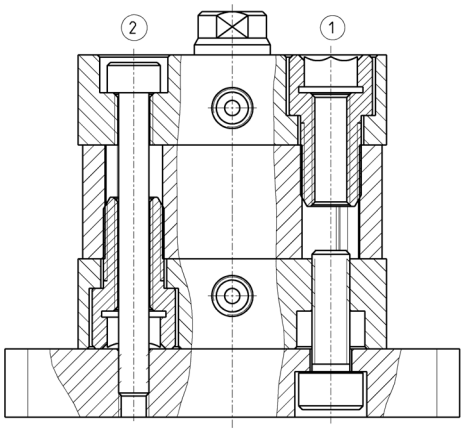

Mounting example for mounting cylinders Ø 20 ÷ 25.
1 = Rear mounting
2 = Through mounting

N.B. For through mounting with screws through the cylinder it is recommended to use non-magnetic screws.

CAMOZZI Automation

Compact magnetic cylinders Mod. 32F and 32M

+ = add the stroke
1 = groove for sensor

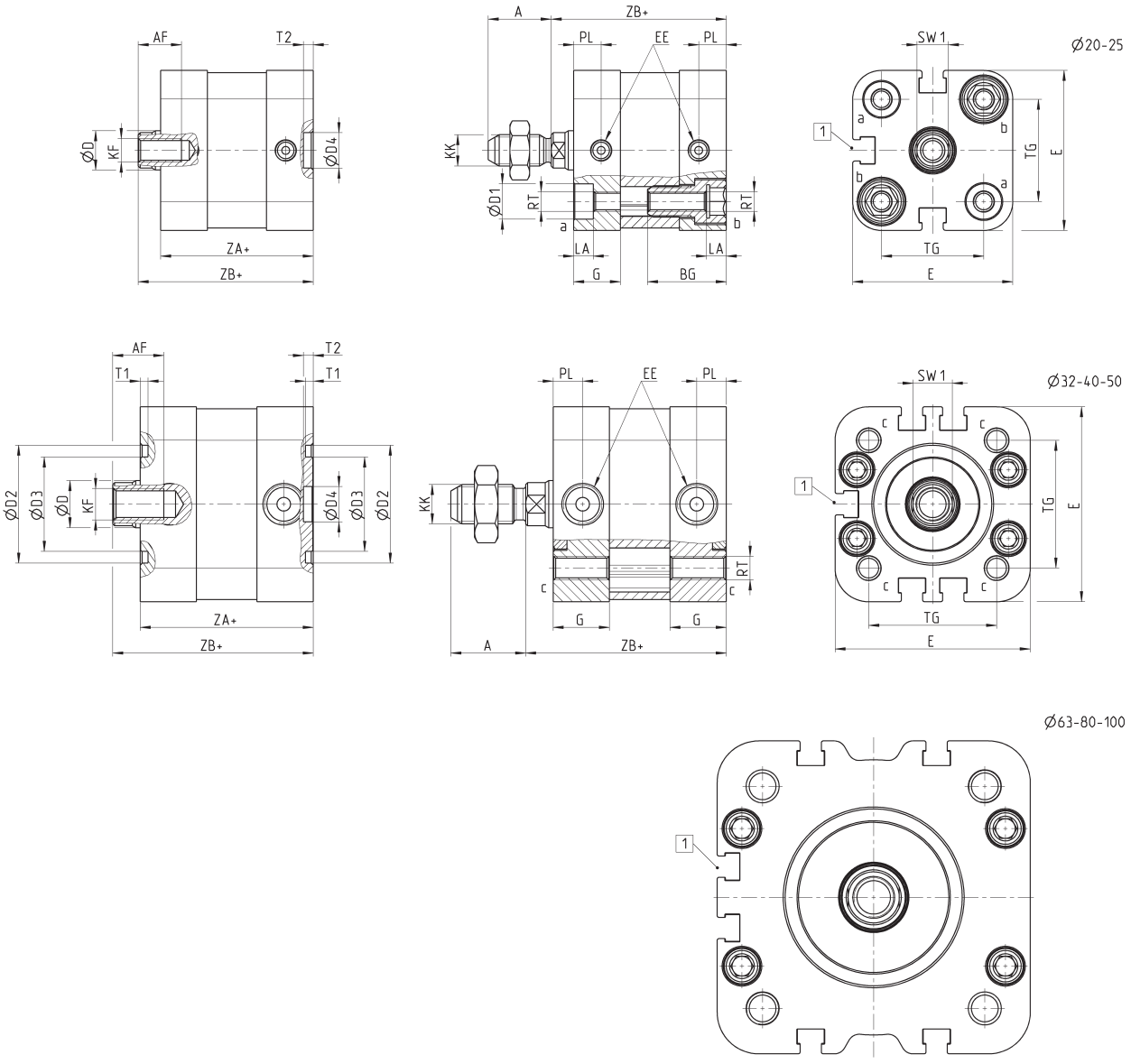

DIMENSIONS																					
Ø	A	AF	BG	G	ØD	D1	ØD2	ØD3	ØD4	E	EE	KF	KK	LA	PL	RT	SW1	T1	T2	TG	ZA	ZB
20	16	11	20	10,9	10	9	-	-	9	35,8	M5	M6	M8X1,25	5	6,5	M5	8	-	2,5	22	36,8	42,5
25	16	11	20	11,9	10	9	-	-	9	40,7	M5	M6	M8X1,25	5	7	M5	8	-	2,5	26	38,8	44,5
32	19	13	-	14,3	12	-	30	24	9	49,6	G1/8	M8	M10X1,25	-	7,6	M6	10	2	2,5	32,5	44	51
40	19	13	-	14,3	12	-	35	29	9	57	G1/8	M8	M10X1,25	-	7,6	M6	10	2	2,5	38	45	52
50	22	16	-	14,3	16	-	40	34	12	69,6	G1/8	M10	M12X1,25	-	7,6	M8	13	2	3	46,5	45	53
63	22	16	-	14	16	-	45	39	12	79,6	G1/8	M10	M12X1,25	-	7,6	M8	13	2	3	56,5	49	57
80	28	20	-	14,8	20	-	45	39	12	95,6	G1/8	M12	M16X1,5	-	7,7	M10	17	2	3	72	54	63,5
100	28	20	-	17,8	25	-	55	49	12	115,6	G1/8	M12	M16X1,5	-	8	M10	22	2	3	89	66,8	76,5

Compact magnetic cylinders Mod. 32F3 and 32M3

+ = add the stroke once
++ = add the stroke twice
1 = groove for sensor

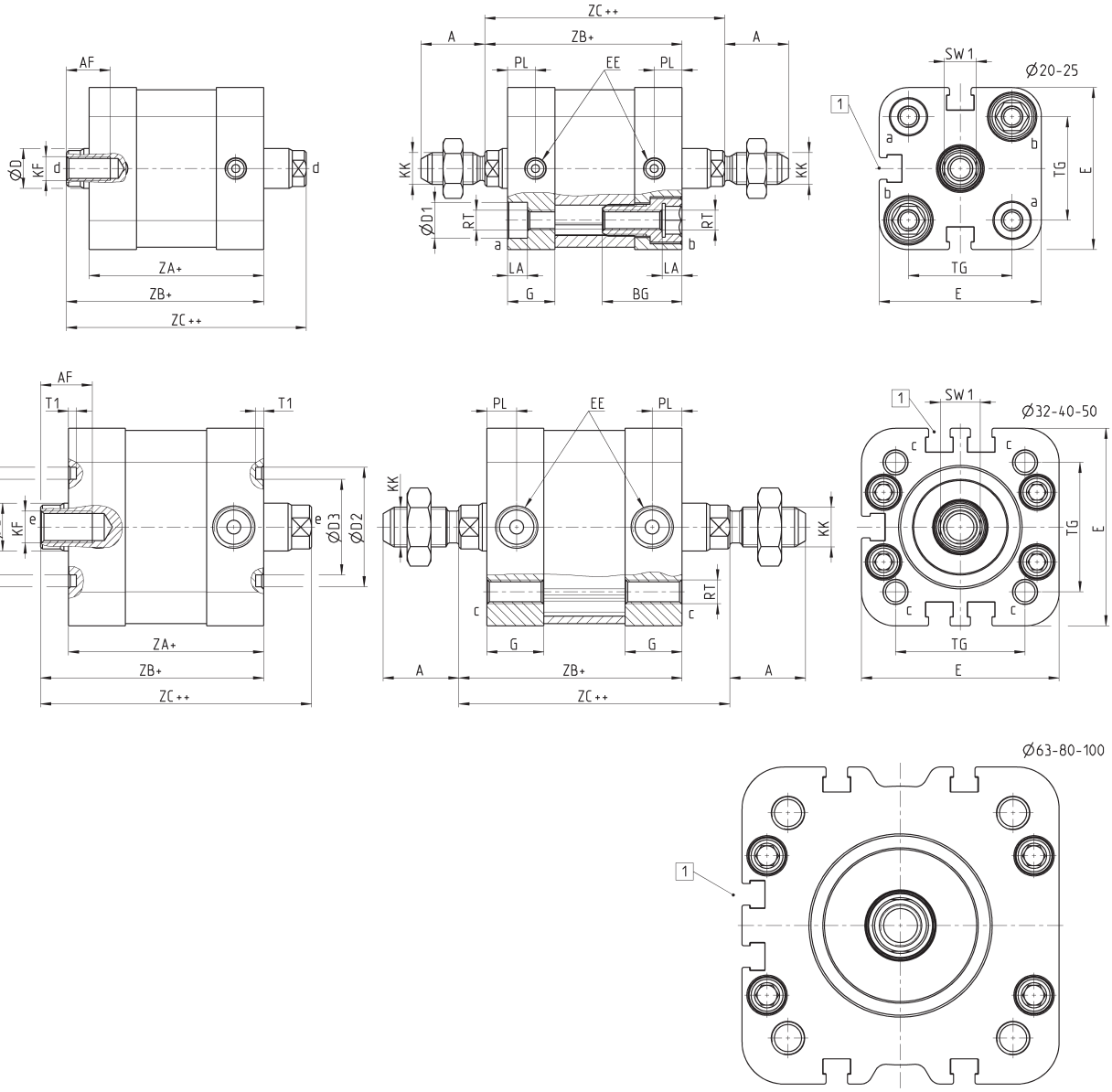

DIMENSIONS																					
Ø	A	AF	BG	G	ØD	ØD1	ØD2	ØD3	E	EE	KF	KK	LA	PL	RT	SW1	T1	TG	ZA	ZB	ZC
20	16	11	20	10,9	10	9	-	-	35,8	M5	M6	M8X1,25	5	6,5	M5	8	-	22	36,8	42,5	48,2
25	16	11	20	11,9	10	9	-	-	40,7	M5	M6	M8X1,25	5	7	M5	8	-	26	38,8	44,5	50,2
32	19	13	-	14,3	12	-	30	24	49,6	G1/8	M8	M10X1,25	-	7,6	M6	10	2	32,5	44	51	58
40	19	13	-	14,3	12	-	35	29	57	G1/8	M8	M10X1,25	-	7,6	M6	10	2	38	45	52	59
50	22	16	-	14,3	16	-	40	34	69,6	G1/8	M10	M12X1,25	-	7,6	M8	13	2	46,5	45	53	61
63	22	16	-	14	16	-	45	39	79,6	G1/8	M10	M12X1,25	-	7,6	M8	13	2	56,5	49	57	65
80	28	20	-	14,8	20	-	45	39	95,6	G1/8	M12	M16X1,5	-	7,7	M10	17	2	72	54	63,5	73
100	28	20	-	17,8	25	-	55	49	115,6	G1/8	M12	M16X1,5	-	8	M10	22	2	89	66,8	76,5	86,2

CAMOZZI Automation

Compact magnetic cylinders Mod. 32R

+ = add the stroke once
++ = add the stroke twice
1 = groove for sensor

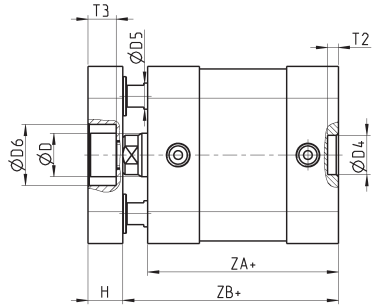

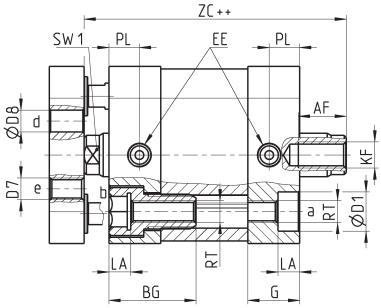

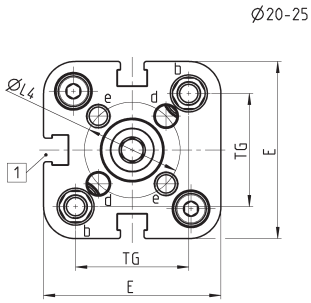

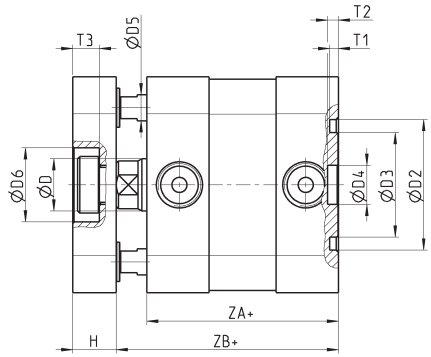

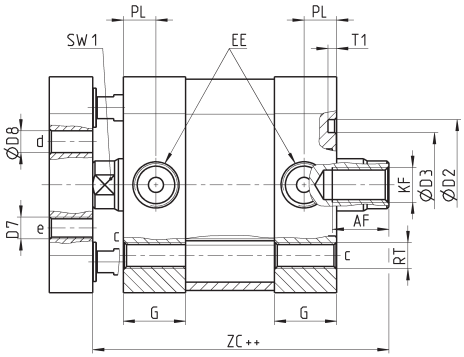

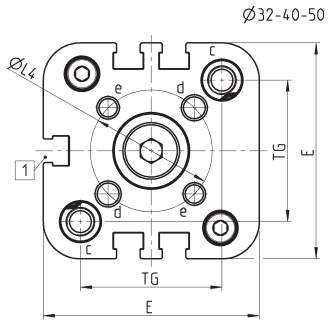

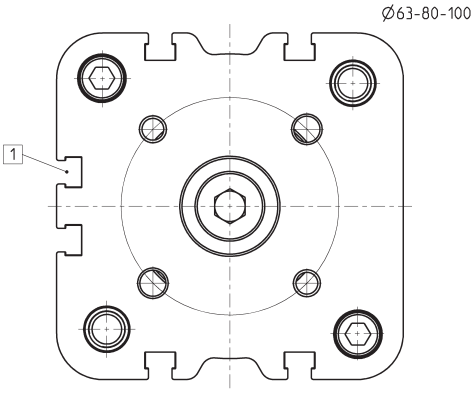

DIMENSIONS

Ø	AF	BG	G	ØD	ØD1	ØD2	ØD3	ØD4	ØD5	ØD6	D7	ØD8	E	EE	H	KF	LA	ØL4	PL	RT	SW1	T1	T2	T3	TG	ZA	ZB	ZC
20	11	20	10.9	10	9	-	-	9	6	-	M4	4	35.8	M5	8	M6	5	17	6.5	M5	8	-	2.5	-	22	36.8	42.5	48.2
25	11	20	11.9	10	9	-	-	9	6	14	M5	5	40.7	M5	8	M6	5	22	7	M5	8	-	2.5	6.5	26	38.8	44.5	50.2
32	13	-	14.3	12	-	30	24	9	6	17	M5	5	49.6	G1/8	10	M8	-	28	7.6	M6	10	2	2.5	6	32.5	44	51	58
40	13	-	14.3	12	-	35	29	9	6	17	M5	5	57	G1/8	10	M8	-	33	7.6	M6	10	2	2.5	6	38	45	52	59
50	16	-	14.3	16	-	40	34	12	10	22	M6	6	69.6	G1/8	12	M10	-	42	7.6	M8	13	2	3	7	46.5	45	53	61
63	16	-	14	16	-	45	39	12	10	22	M6	6	79.6	G1/8	12	M10	-	50	7.6	M8	13	2	3	7	56.5	49	57	65
80	20	-	14.8	20	-	45	39	12	12	24	M8	8	95.6	G1/8	14	M12	-	65	7.7	M10	17	2	3	10.5	72	54	63.5	73
100	20	-	18	25	-	55	49	12	12	24	M10	10	115.6	G1/8	14	M12	-	80	8	M10	22	2	3	10.5	89	67	76.7	86.2

Foot mount Mod. B

Material: zinc-plated steel.

Supplied with:
2x feet
4x screws

+ = add the stroke

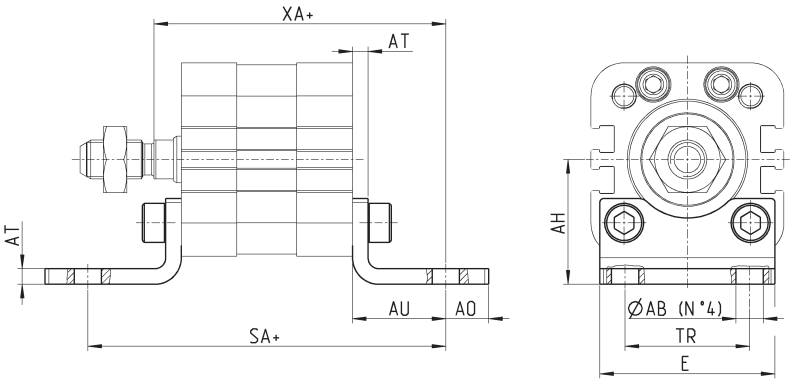

DIMENSIONS										
Mod.	Ø	ØAB	AH	AO	AU	AT	E	TR	SA	XA
B-32-20	20	6,5	27	9	16	4	35	22	68,8	58,5
B-31-25	25	6,5	29	9	16	4	39	26	70,8	60,5
B-41-32	32	7	32	11	24	4	45	32	92	75
B-41-40	40	10	36	15	28	4	53,5	36	101	80
B-41-50	50	10	45	15	32	4	62,5	45	109	85
B-41-63	63	10	50	15	32	5	73	50	113	89
B-41-80	80	12	63	20	41	6	92	63	136	104,5
B-41-100	100	14,5	71	25	41	6	108,5	71	148,8	117,5

Rear female trunnion Mod. C and C-H

Material: Aluminium.

Supplied with:
1x female trunnion
4x screws

+ = add the stroke

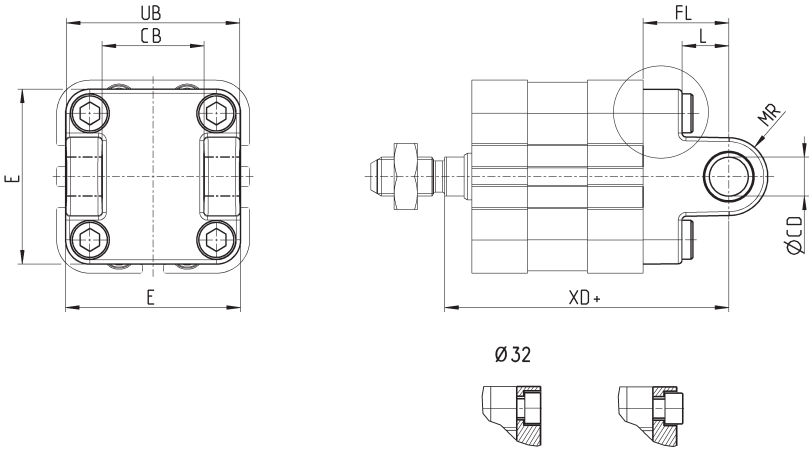

DIMENSIONS									
Mod.	Ø	ØCD	E	CB	UB	L	FL	MR	XD+
C-41-32	32	10	47	26	46.5	12.5	22	10	73
C-41-40	40	12	52	28	52	16	25	12	77
C-41-50	50	12	64	32	60	16	27	12	80
C-H-41-63	63	16	74	40	70	21	32	16	89
C-H-41-80	80	16	94	50	90	22	36	16	99,5
C-H-41-100	100	20	114	60	110	27	41	20	117,5

Front female trunnion Mod. H and C-H

Material: Aluminium.

Supplied with:
1x female trunnion
4x screws

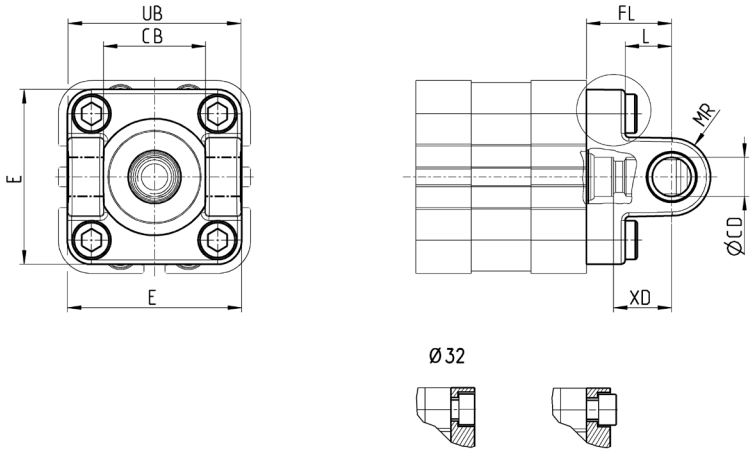

DIMENSIONS									
Mod.	Ø	ØCD	E	CB	UB	L	FL	MR	XD
H-41-32	32	10	47	26	46.5	12.5	22	10	15
H-41-40	40	12	52	28	52	16	25	12	18
H-41-50	50	12	64	32	60	16	27	12	19
H-60-63	63	16	74	40	70	21	32	16	24
C-H-41-80	80	16	94	50	90	22	36	16	26,5
C-H-41-100	100	20	114	60	110	27	41	20	31,3

Front and rear flange Mod. D-E

Material: zinc-plated steel for Ø 20 - Ø 25; Aluminium for Ø 32 ÷ Ø 100.

Supplied with:
1x flange
4x screws

+ = add the stroke

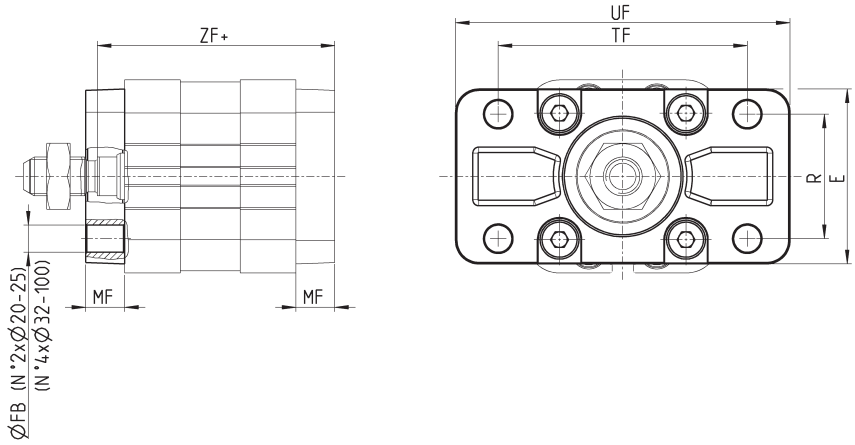

DIMENSIONS								
Mod.	Ø	ØFB	E	MF	R	TF	UF	ZF+
D-E-32-20	20	6,6	36	10	-	55	70	52,5
D-E-32-25	25	6,6	40	10	-	60	76	54,5
D-E-41-32	32	7	45	10	32	64	80	61
D-E-41-40	40	9	52	10	36	72	90	62
D-E-41-50	50	9	65	12	45	90	110	65
D-E-41-63	63	9	75	12	50	100	120	69
D-E-41-80	80	12	95	16	63	126	150	79,5
D-E-41-100	100	14	115	16	75	150	170	92,5

Rear trunnion male Mod. L

Material: Aluminium.

Supplied with:
1x male trunnion
4x screws

+ = add the stroke

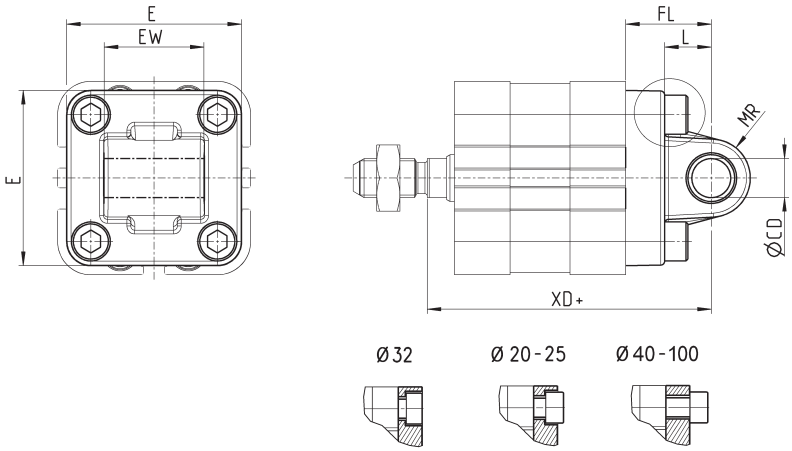

DIMENSIONS								
Mod.	Ø	øCD	E	EW	L	FL	MR	XD+
L-32-20	20	8	34	16	14	20	8	62,5
L-32-25	25	8	38	16	14	20	8	64,5
L-41-32	32	10	47	26	12.5	22	10	73
L-41-40	40	12	52	28	16	25	12	77
L-41-50	50	16	64	32	16	27	12	80
L-41-63	63	16	74	40	21	32	15.5	89
L-41-80	80	20	94	50	22	36	16	99,5
L-41-100	100	20	114	60	27	41	20	117,5

Rear trunnion ball-joint Mod. R

* This trunnion doesn't comply with the ISO 15552 standard
Material: Aluminium

Supplied with:
1x ball joint
4x screws

+ = add the stroke

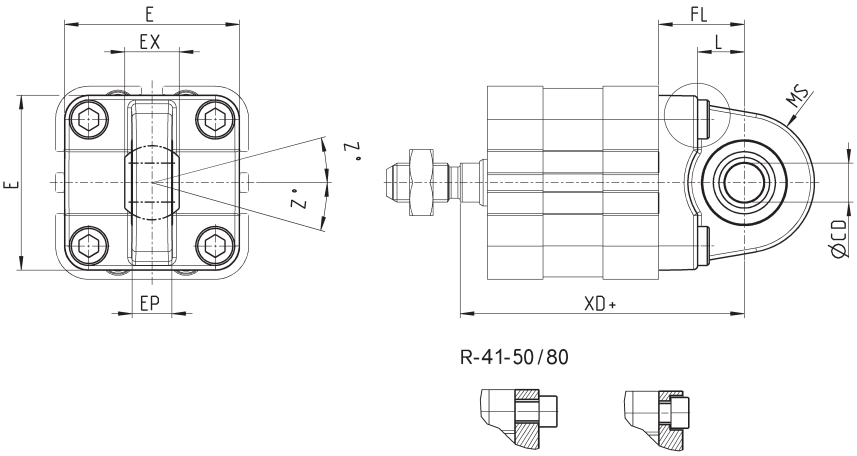

DIMENSIONS										
Mod.	Ø	øCD	E	EX	EP	L	FL	MS	XD+	Z°
R-41-32	32	10	45	14	10.5	12	22	16	73	4
R-41-40	40	12	52	16	12	15	25	19	77	4
R-41-50*	50	12	62.5	16	12	15	27	21	80	4
R-50	50	16	65	21	15	16	27	21.5	80	4
R-41-63	63	16	75	21	15	20	32	24	89	4
R-41-80*	80	16	92	21	15	24	36	28	99.5	4
R-80	80	20	95	25	18	22	36	28.5	99.5	4
R-41-100	100	20	115	25	18	25	41	30	117.5	4

Accessory combination Mod. C+L+S

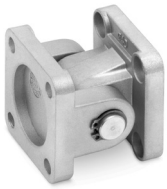

Material: Aluminium.

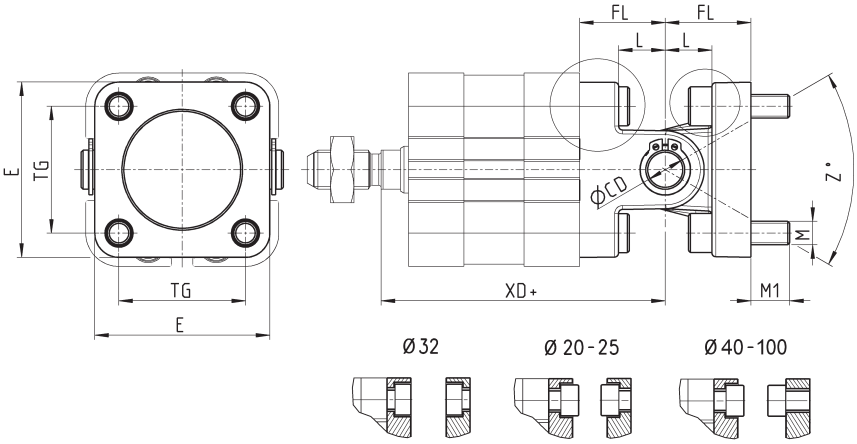

+ = add the stroke

DIMENSIONS										
Mod.	Ø	ØCD	E	L	FL	M	M1	TG	XD+	Z° (max)
C+L+S	32	10	47	12.5	22	M6	10.5	32.5	73	30
C+L+S	40	12	52	16	25	M6	10.5	38	77	40
C+L+S	50	12	64	16	27	M8	11.5	46.5	80	25
C+L+S	63	16	74	21	32	M8	13.5	56.5	89	36
C+L+S	80	16	93	22	36	M10	15	72	99.5	34
C+L+S	100	20	114	27	41	M10	15	89	117.5	38

90° male trunnion Mod. ZC

Material: Aluminium.

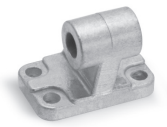

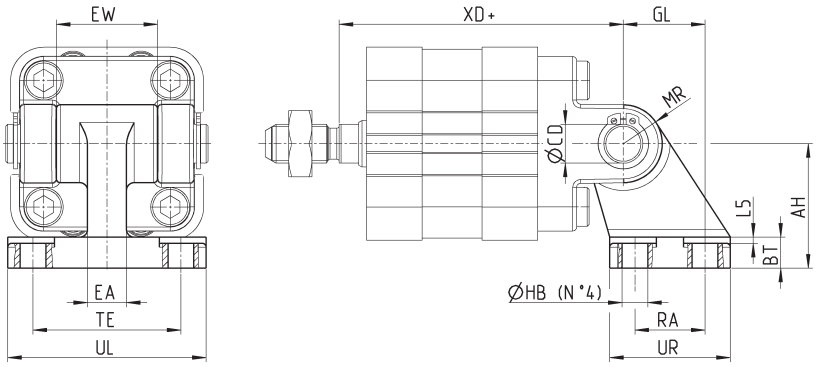

Supplied with:
1x male support

+ = add the stroke

DIMENSIONS															
Mod.	Ø	AH	BT	ØCD	EA	EW	GL	ØHB	L5	MR	RA	UL	UR	TE	XD
ZC-32	32	32	8	10	10	26	21	6,6	1,6	10	18	51	31	38	73
ZC-40	40	36	10	12	15	28	24	6,6	1,6	11	22	54	35	41	77
ZC-50	50	45	12	12	16	32	33	9	1,6	13	30	65	45	50	80
ZC-63	63	50	14	16	16	40	37	9	1,6	15	35	67	50	52	89
ZC-80	80	63	14	16	20	50	47	11	2,5	15	40	86	60	66	99,5
ZC-100	100	71	17	20	20	60	55	11	2,5	19	50	96	70	76	117,5

90° swivel combination for trunnion Mod. I

Material: zinc-plated steel.

Supplied with:
1x female support
2x seeger
1x clevis pin

+ = add the stroke

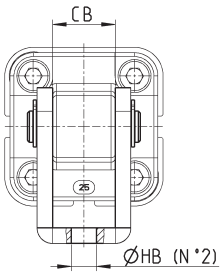

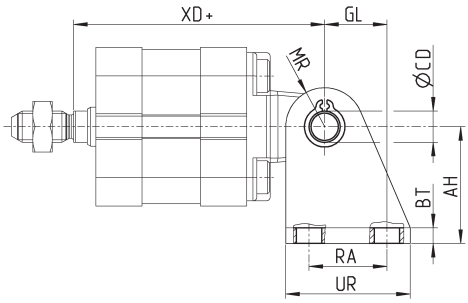

DIMENSIONS											
Mod.	Ø	AT	BT	øCD	CB	GL	øHB	MR	RA	UR	XD
I-20-25	20	30	4	8	16,1	16	6,5	10	20	32	62,5
I-20-25	25	30	4	8	16,1	16	6,5	10	20	32	64,5

Clevis pin Mod. S

Supplied with:
1x clevis pin in stainless steel
2x Seeger in steel

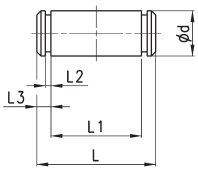

DIMENSIONS						
Mod.	Ø	D	L	L1	L2	L3
S-32	32	10	52	46	1,1	3
S-40	40	12	59	53	1,1	3
S-50	50	12	67	61	1,1	3
S-63	63	16	77	71	1,1	3
S-80	80	16	97	91	1,1	3
S-100	100	20	121	111	1,3	5

Rod fork end Mod. G

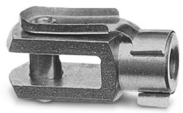

ISO 8140
Material: zinc-plated steel.

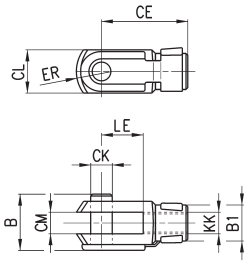

DIMENSIONS										
Mod.	Ø	øCK	LE	CM	CL	ER	CE	KK	B	øB1
G-20	20-25	8	16	8	16	10	32	M8X1,25	22	14
G-25-32	32-40	10	20	10	20	12	40	M10x1,25	26	18
G-40	50-63	12	24	12	24	14	48	M12x1,25	32	20
G-50-63	80-100	16	32	16	32	19	64	M16x1,5	40	26

Piston rod socket joint Mod. GY

Material: zama and zinc-plated steel.

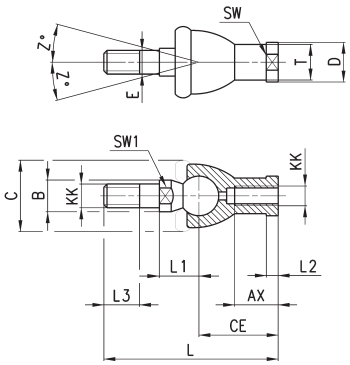

DIMENSIONS																
Mod.	Ø	KK	L	CE	L2	AX	SW	SW1	L1	L3	øT	øD	E	øB	øC	Z
GY-20	20-25	M8X1,25	65	32	5	16	14	10	16	12	12,5	13	6	10	20	15
GY-32	32-40	M10X1,25	74	35	6,5	18	17	11	19,5	15	15	19	10	14	28	15
GY-40	50-63	M12X1,25	84	40	6,5	20	19	17	21	17	17,5	22	12	19	32	15
GY-50-63	80-100	M16X1,5	112	50	8	27	22	19	27,5	23	22	27	16	22	40	11

Swivel ball joint Mod. GA

ISO 8139
Material: zinc-plated steel

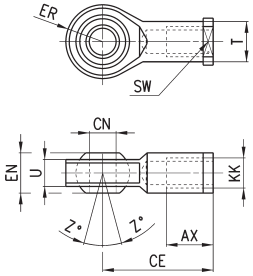

DIMENSIONS											
Mod.	Ø	øCN	U	EN	ER	AX	CE	KK	øT	Z	SW
GA-20	20-25	8	9	12	12	16	36	M8X1,25	12,5	6,5	14
GA-32	32-40	10	10,5	14	14	20	43	M10x1,25	15	6,5	17
GA-40	50-63	12	12	16	16	22	50	M12X1.25	17,5	6,5	19
GA-50-63	80-100	16	15	21	21	28	64	M16x1,5	22	7,5	22

Piston rod lock nut Mod. U

ISO 4035
Materials: zinc-plated steel.

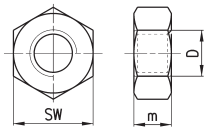

DIMENSIONS				
Mod.	Ø	D	M	SW
U-20	20-25	M8X1.25	5	13
U-25-32	32-40	M10X1,25	6	17
U-40	50-63	M12X1,25	7	19
U-50-63	80-100	M16X1,5	8	24

Centring sleeve Mod. TR

Supplied with:
1x anodized AL centring ring

Designed for the centring of both rear and front end caps with brackets Mod. B/D-E/C/C-H/H/L/R, as for the centring of the cylinder while mounting.

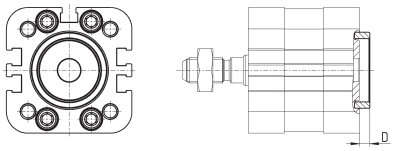

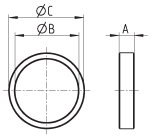

DIMENSIONS					
Mod.	Ø	A	øB	øC	D
TR-32-32	32	6	25	30	4
TR-32-40	40	6	30	35	4
TR-32-50	50	6	35	40	4
TR-32-63	63-80	7	40	45	5
TR-32-100	100	7	50	55	5

Centring pin Mod. TS-32-20

Material: anodized AL

Designed for the centring of rear end caps with brackets L-32-20 / L-32-25 as for cylinder while mounting, it is also suitable in "a" holes of rear/front end caps of cyl. Ø20-25 or in the central hole of rear end caps of cyl. Ø32-40.

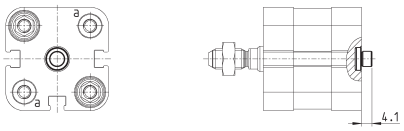

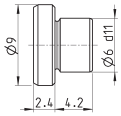

Mod.	
TS-32-20	

Self aligning rod Mod. GK

Only for cylinders with male rod.

Material: zinc-plated steel.

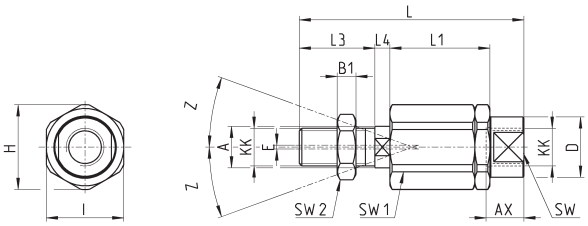

DIMENSIONS																	
Mod.	Ø	KK	L	L1	L3	L4	ØA	ØD	H	I	SW	SW1	SW2	B1	AX	Z	E
GK-20	20-25	M8x1,25	57	26	21	5	8	12,5	19	17	11	7	13	4	16	4	2
GK-25-32	32-40	M10x1,25	71,5	35	20	7,5	14	22	32	30	19	12	17	5	22	4	2
GK-40	50-63	M12x1,25	75,5	35	24	7,5	14	22	32	30	19	12	19	6	22	4	2
GK-50-63	80-100	M16x1,5	104	53	32	10	22	32	45	41	27	20	24	8	30	3	2

Coupling piece Mod. GKF

Material: zinc-plated steel.

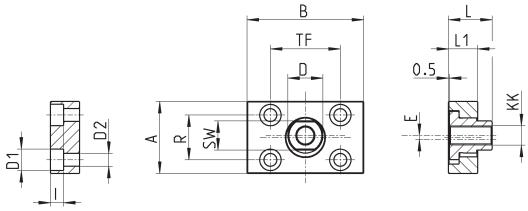

DIMENSIONS														
Mod.	Ø	KK	A	B	R	TF	L	L1	I	ØD	ØD1	ØD2	SW	E
GKF-20	20-25	M8x1,25	30	35	20	25	22,5	10	-	14	5,5	-	13	1,5
GKF-25-32	32-40	M10x1,25	37	60	23	36	22,5	15	6,8	18	11	6,6	15	2
GKF-40	50-63	M12x1,25	56	60	38	42	22,5	15	9	20	15	9	15	2,5
GKF-50-63	80-100	M16x1,5	80	80	58	58	26,5	15	10,5	25	18	11	22	2,5

Series 32 compact cylinders, Tandem and Multi-position versions

Double-acting, magnetic
ø 25, 40, 63, 100 mm

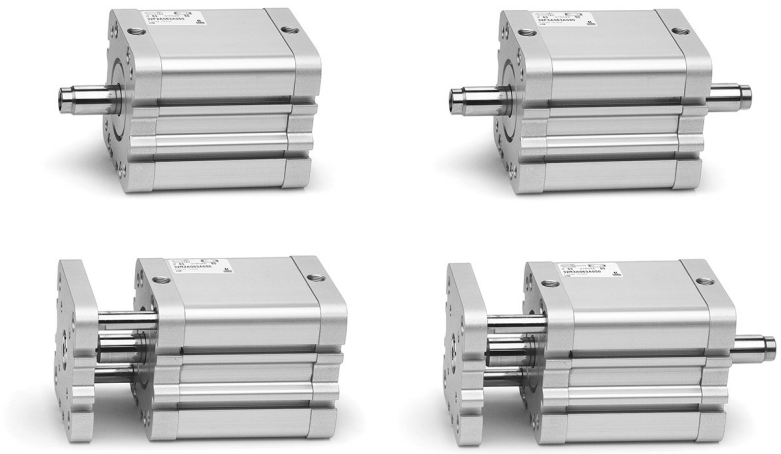

- In compliance with ISO 21287
- Compact design
- Wide range of models available in different diameters

Thanks to their great compactness Series 32 cylinders, Tandem and Multi-position, are suitable to be installed within confined spaces and can be used with the same mounting elements of other standard cylinders ISO15552
The Tandem version enables to obtain up to 2 times the thrust force of a normal cylinder (standard traction force), while the Multi-position version can obtain up to three positions with one cylinder only.

GENERAL DATA

Construction	compact profile
Operation	double-acting, magnetic
Material	body and end-blocks = anodized AL rod = rolled stainless steel AISI 303 piston = anodized AL rod seal, OR end-block and piston seal = PU
Mounting	with threaded holes on the end blocks flange – feet – trunnion
Strokes min. and max. (1) Multi-position	Series 32F, 32M Ø 25 = 5-300 mm (dimension x2) Series 32F, 32M Ø 40 - 63 = 5-400 mm (dimension x2) Series 32F, 32M Ø 100 = 5-500 mm (dimension x2)
Strokes min. and max. (1) Tandem	Series 32F, 32M Ø 25 = 5-80 mm Series 32F, 32M Ø 40 - 63 - 100 = 5-100 mm
Operating temperature	0°C ÷ 80°C (with dry air -20°C)
Operating pressure	1 ÷ 10 bar
Fluid	clean air, without lubrication. If lubricated air is used, it is recommended to use oil ISOVG32. Once applied the lubrication should never be interrupted.
Operating speed	10 ÷ 1000 mm\sec (without load)

(1) the minimum stroke for the use of the sensors is 10 mm.

CODING EXAMPLE

32	M	2	A	040	A	050	N	2

32	SERIES compact magnetic	
M	VERSION M = male rod thread, mounted with rod nut Mod. U F = female rod thread	
2	OPERATION 2 = double-acting	PNEUMATIC SYMBOLS CDPP
A	MATERIALS A = anodized aluminium profile, end blocks and piston PU seals (rod - OR end block and piston)	
040	BORE 025 = 25 mm 040 = 40 mm 063 = 63 mm 100 = 100 mm	 CD5T, CD6T, CD7T CD5T, CD6T, CD7T CD2T, CD3T, CD4T CD5T, CD6T, CD7T
A	CONSTRUCTION A = standard	
050	STROKE - Tandem stroke in mm - Multi-position X1mm/X2mm. Insert the strokes without the initial 0 (see application scheme)	
N	Tandem and Multi-position	
2	STAGES (for Tandem version only) 2 = 2 stages	

PNEUMATIC SYMBOLS

The pneumatic symbols which have been indicated in the CODING EXAMPLE are shown below.

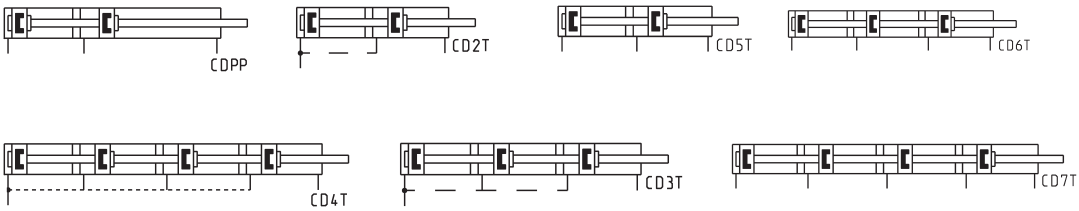

Operation scheme

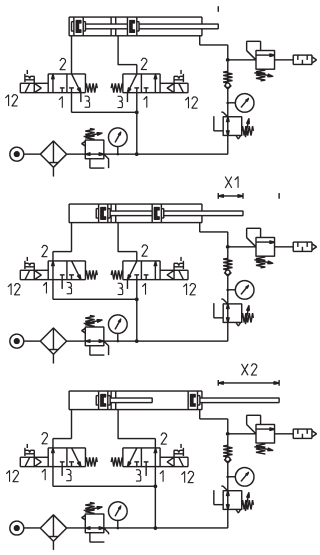

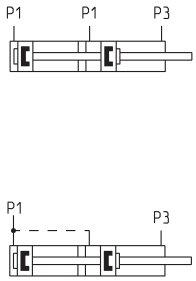

Multi-position - Example: 32M2A040A25/75N
X1 = 25 mm
X2 = 75 mm

Tandem, stroke = 50 mm - Example: 32M2A040A050N2
In order to increase the speed of the rod's return, it is possible to remove the covers from the intermediate end caps and supply the positive chambers from the outside

Tandem cylinders Mod. 32F2A/32M2A...N2

+ = add the stroke
++ = add the stroke two times
1 = Groove for sensor
2 = Positive stroke
3 = Negative stroke

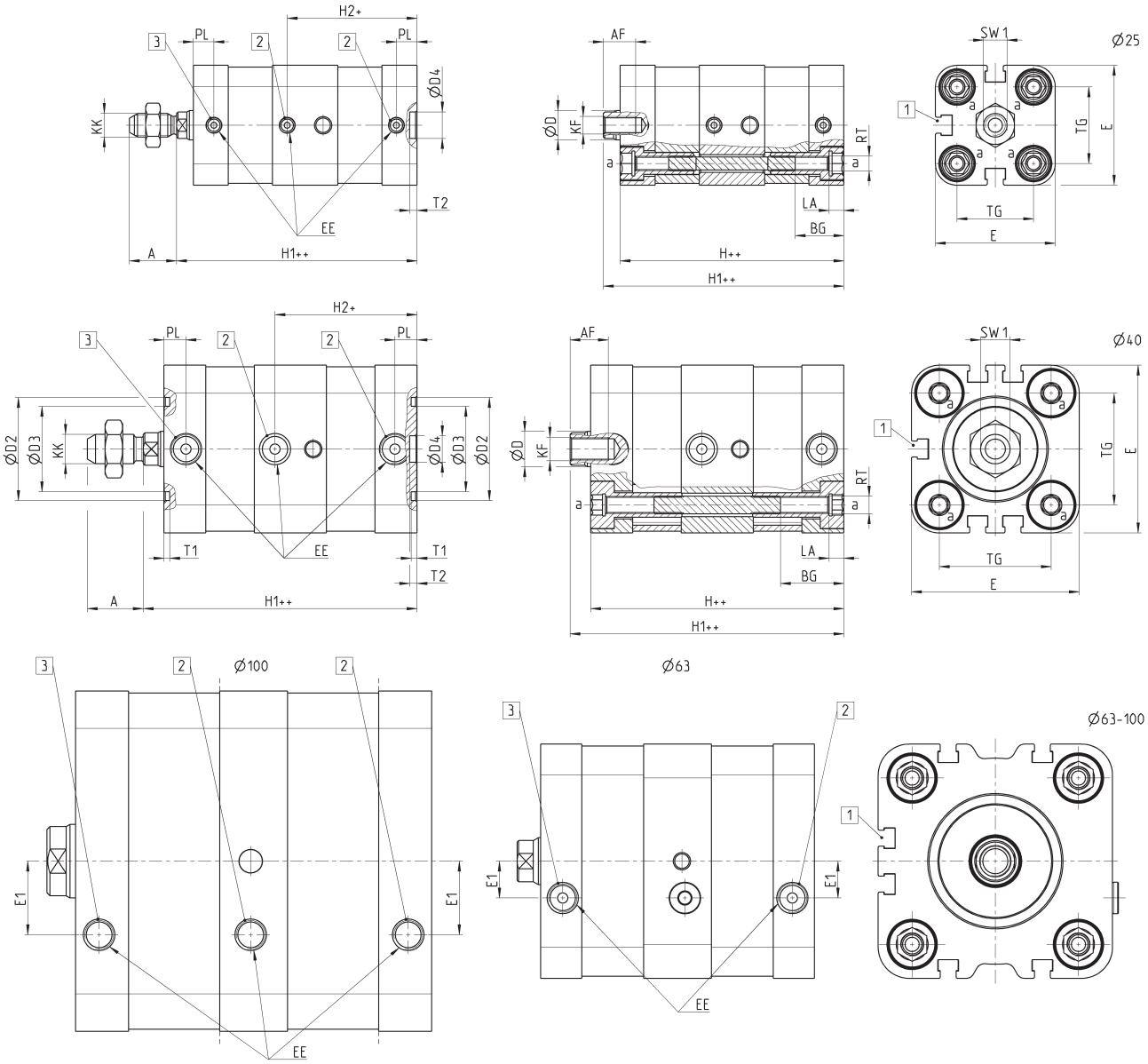

DIMENSIONS																						
Ø	A	AF	BG	ØD	ØD2	ØD3	ØD4	E	EE	E1	H	H1	H2	KF	KK	LA	PL	RT	SW1	T1	T2	TG
25	16	11	16,5	10	-	-	9	40,7	M5	-	76	81,7	44	M6	M8X1,25	5	7	M5	8	-	2,5	26
40	19	13	21,5	12	35	29	9	57	G1/8	-	86	93	48,2	M8	M10X1,25	5	7,6	M6	10	2	2,5	38
63	22	16	18,5	16	45	39	12	79,6	G1/8	12'5	93	101	-	M10	M12X1,25	6	7,6	M8	13	2	3	56,5
100	28	20	20	25	55	49	12	115,6	G1/8	25	121	130,7	-	M12	M16X1,5	6	8	M10	22	2	3	89

Multi-position cylinders Mod. 32F2A/32M2A...X1/X2N

1 = Groove for sensor
2 = Positive stroke cylinder 1
3 = Positive stroke cylinder 2
4 = Negative stroke for both cylinders

X1 = Partial stroke
X2 = Total stroke as operation scheme

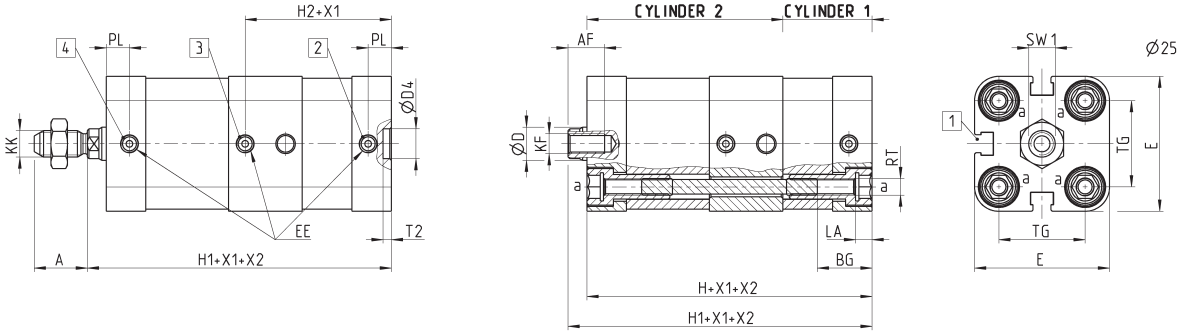

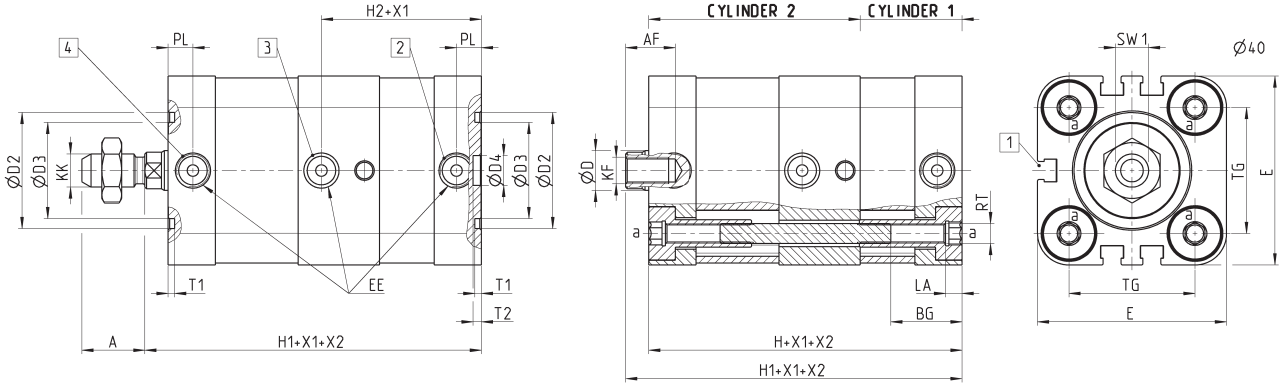

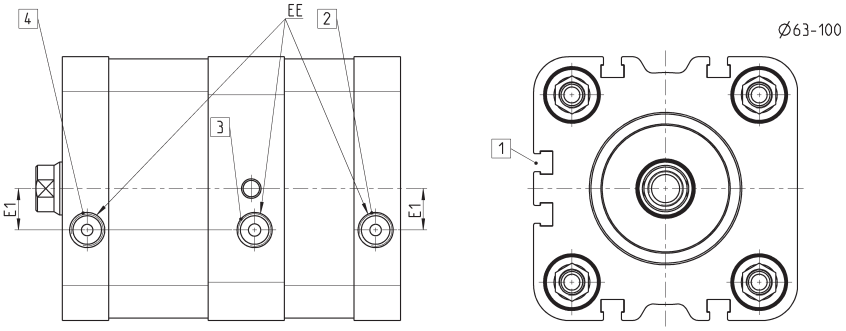

DIMENSIONS																					
Ø	A	AF	BG	ØD	ØD2	ØD3	ØD4	E	EE	E1	H	H1	H2	KF	KK	LA	PL	RT	SW1	T1	T2	TG
25	16	11	16,5	10	-	-	9	40,7	M5	-	76	81,7	44	M6	M8X1,25	5	7	M5	8	-	2,5	26
40	19	13	21,5	12	35	29	9	57	G1/8	-	86	93	48,2	M8	M10X1,25	5	7,6	M6	10	2	2,5	38
63	22	16	18,5	16	45	39	12	79,6	G1/8	12,5	93	101	44	M10	M12X1,25	6	7,6	M8	13	2	3	56,5
100	28	20	20	25	55	49	12	115,6	G1/8	25	121	130,7	60,5	M12	M16X1,5	6	8	M10	22	2	3	89

Series 45
anti-rotation guide units

Suitable for cylinders:
- DIN/ISO 6432 (ø12, 16, 20, 25 mm)
- ISO 15552, previous DIN/ISO 6431 (ø32, 40, 50, 63, 80, 100 mm)

» To be used with VDMA/ ISO cylinders

» Available as ball bearing guide and self lubricating guide

Series 45 guide units can be used with all DIN/ISO 6432 cylinders of ø12 ÷ ø25 and ISO 15552, previous DIN/ISO 6431, cylinders of ø32 ÷ ø100.

They have been developed in order to prevent piston rod rotation and can support possible radial loads.

Series 45 guide units are available in three different models depending on the applicable loads. The UT and HT guides with crawling supports are self lubricating, while HB guides have a ball bush.
To ensure the right choice of the loads in relation to the stroke, please refer to the graphs. The shorter the stroke the higher will be the applicable loads.

GENERAL DATA

Type of construction	U and H
Operation	Mod. 45NUT and 45NHT: without lubrication Mod. 45NHB requires lubrication according to DIN 51825 code KP2G-20
Material	body: anodized aluminium flexible coupling: stainless steel AISI 303 plate: anodized aluminium guided columns: rolled stainless steel AISI 420B (mod. 45NUT and 45NHT) - hardened steel C50 (Mod. 45NHB)
Assembly	by means of threaded holes
Strokes min - max	see diagrams
Installation	in any position

CODING EXAMPLE

45	N	UT	050	A	0100

45	SERIES
N	VERSION N = standard
UT	OPERATION UT = "U" self lubricating guide HT = "H" self lubricating guide HB = "H" ball guide
050	BORE 016 = Ø 12-16 mm (available only in the UT version with "U" self lubricating guide) 020 = 20 mm 025 = 25 mm 032 = 32 mm 040 = 40 mm 050 = 50 mm 063 = 63 mm 080 = 80 mm 100 = 100 mm
A	MATERIALS A = anodized aluminium body - stainless steel AISI 420B columns for 45UT and 45HT - hardened steel C50 columns for 45HB
0100	STROKE in mm

45NUT GUIDES - APPLICABLE LOADS DEPENDING ON PROJECTION - GRAPH No 1

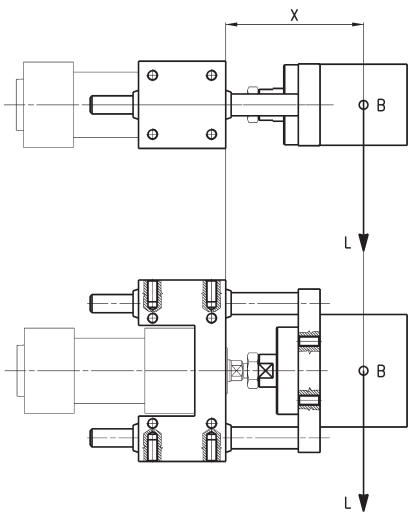

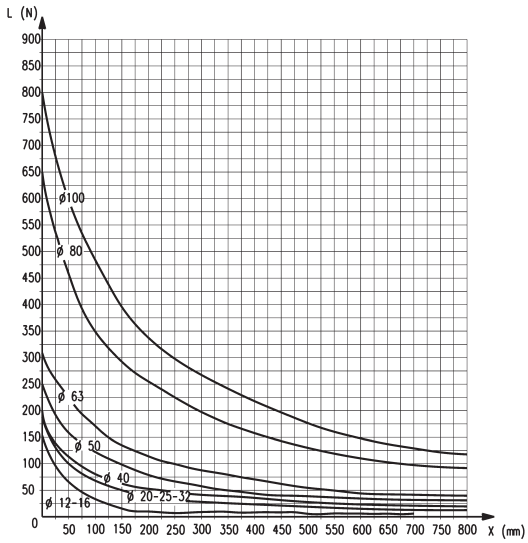

B = centre of gravity for applied load
L = load
X = fixed projection + stroke
fixed projection = distance to the centre of gravity

Guide "U" moving on bush (45NUT)

45NHB GUIDES - APPLICABLE LOADS DEPENDING ON PROJECTION - GRAPH No 2

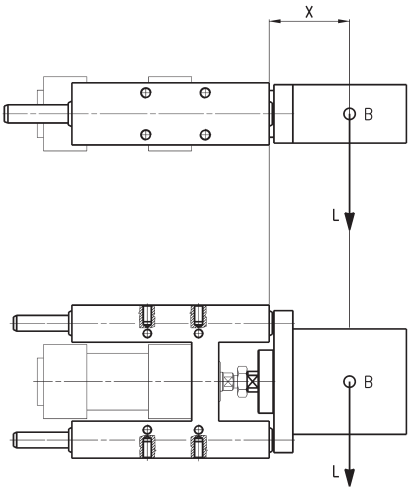

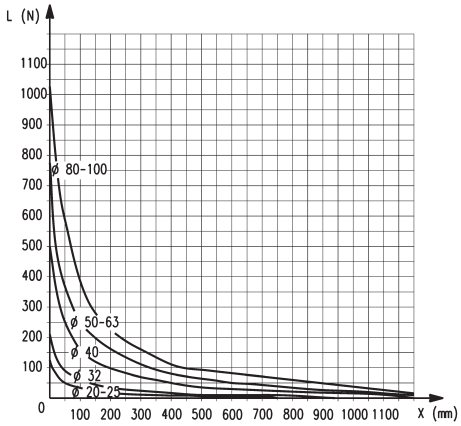

B = centre of gravity for applied load
L = load
X = fixed projection + stroke
fixed projection = distance to the centre of gravity

Guide "HB" with linear ball bearing (45NHB)

45NHT GUIDES - APPLICABLE LOADS DEPENDING ON PROJECTION - GRAPH No 3

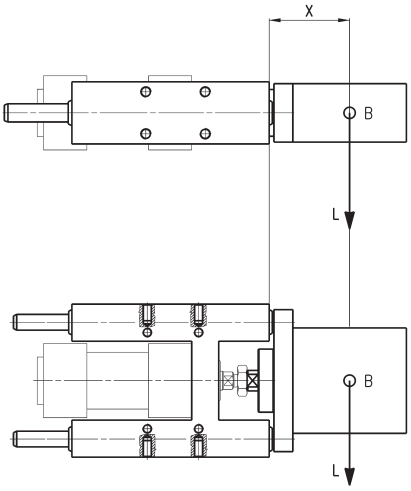

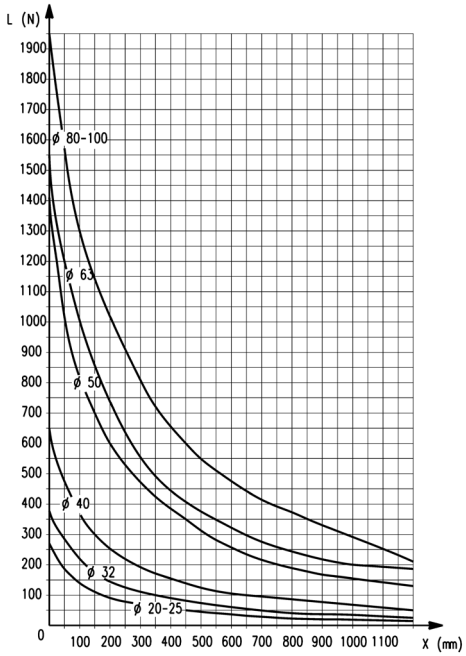

B = centre of gravity for applied load
L = load
X = fixed projection + stroke
fixed projection = distance to the centre of gravity

Guide "HT" moving on bush (45NHT)

Guides Mod. 45NUT for cylinders Series 16, 24, 25

Suitable for cylinders Series 16, 24 and 25 DIN/ISO 6432, ø 12 and 16.
These guides do not need lubrication.
For applicable loads see graph 1.

Cylinders ø 12 and ø 16 use the same guides.

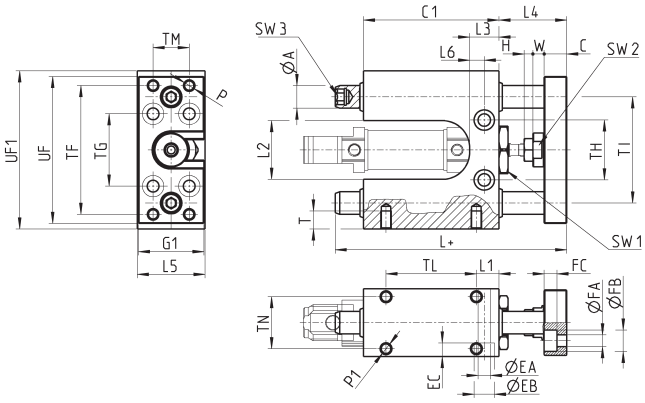

Supplied with:
1x fixing nut.

Draw note:
+ = add the stroke

DIMENSIONS																																	
Ø	TF	TG	TH	TI	TM	TL	TN	UF1	UF	G1	øA	C1	H	W	C	L	L1	L2	L3	L4	L5	L6	P	P1	T	øEA	øEB	EC	øFA	øFB	FC	SW1	SW2	SW3
12	57	32	26,5	47	16	40	23	70	65	29	10	60	4	5	10	102,5	10	26	13	30	30	6,5	M5	M5	8	5,5	9	5,7	5,5	9,5	5,7	21	13	6
16	57	32	26,5	47	16	40	23	70	65	29	10	60	4	5	10	102,5	10	26	13	30	30	6,5	M5	M5	8	5,5	9	5,7	5,5	9,5	5,7	21	13	6

Guides Mod. 45NUT for cylinders Series 24, 25

Suitable for cylinders Series 24 and 25 DIN/ISO 6432, ø 20 and 25.
These guides do not need lubrication.

For applicable loads see graph 1.

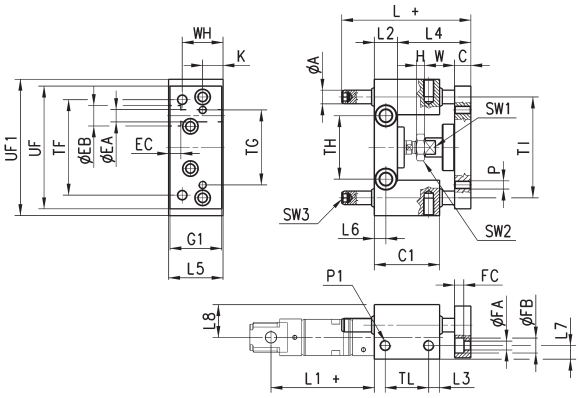

Supplied with:
1x fixing nut.

Draw note:
+ = add the stroke

DIMENSIONS																																	
Ø	TF	TG	TH	TI	TL	UFI	UF	G1	øA	WH	C1	H	W	C	K	L	L1	L2	L3	L4	L5	L6	L7	L8	P	P1	øEA	øEB	EC	øFA	øFB	FC	SW1	SW2
20	70	55	46,5	74	32	100	90	38	10	30	48	4	22	12	15	77	71	17	8	48+2	40	8,5	10	24	M6	M8	9	15	9	6,5	11	6,8	13	13
25	70	55	46,5	74	32	100	90	38	10	30	48	6	22	12	15	77	76	17	8	48+2	40	8,5	10	24	M6	M8	9	15	9	6,5	11	6,8	13	17

Guides Mod. 45NHT for cylinders Series 24, 25

Suitable for cylinders Series 24 and 25 DIN/ISO 6432, ø 20 and 25.
These guides do not need lubrication.

For applicable loads see graph 3.

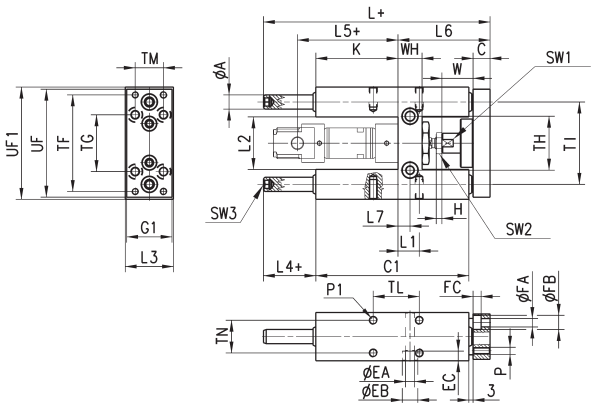

Supplied with:
1x fixing nut.

Draw note:
+ = add the stroke

DIMENSIONS																																	
Ø	TF	TG	TH	TI	TL	TM	TN	UF	G1	UF1	øA	WH	C1	H	W	C	K	L	L1	L2	L3	L4	L5	L6	L7	P	P1	T	øEA	øEB	EC	øFA	øFB	FC	SW1	SW2	SW3
20	68	40	38	58	32,5	20	23	76	32	79	10	17	108	4	22	12	58	160	15	37	34	37	71	65	8,5	M5	M6	14	6,5	11	6,8	5,5	10	5,7	13	13	6
25	68	40	38	58	32,5	20	23	76	32	79	10	17	108	6	17	12	58	160	15	37	34	37	76	65	8,5	M5	M6	14	6,5	11	6,8	5,5	10	5,7	13	17	6

Guides Mod. 45NHB for cylinders Series 24, 25

Suitable for cylinders Series 24 and 25 DIN/ISO 6432, ø 20 and 25.
To lubricate these guides, use the special lubricator. For applicable loads see graph No 2.

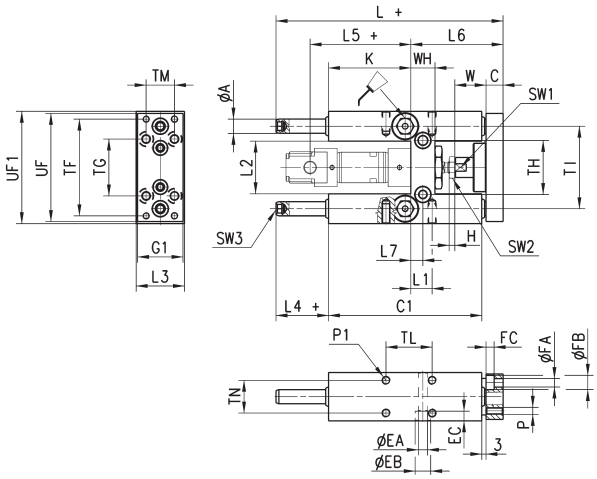

Supplied with:
1x fixing nut.

Draw note:
+ = add the stroke

DIMENSIONS																																		
Ø	TF	TG	TH	TI	TL	TM	TN	UF	G1	UF1	A	WH	C1	H	W	C	K	L	L1	L2	L3	L4	L5	L6	L7	P	P1	T	øEA	øEB	EC	øFA	øFB	FC	SW1	SW2	SW3
20	68	40	38	58	32,5	20	23	76	32	79	10	17	108	4	22	12	58	160	15	37	34	37	71	65	8,5	M5	M6	14	6,5	11	6,8	5,5	10	5,7	13	13	6
25	68	40	38	58	32,5	20	23	76	32	79	10	17	108	6	17	12	58	160	15	37	34	37	76	65	8,5	M5	M6	14	6,5	11	6,8	5,5	10	5,7	13	17	6

Guides Mod. 45NUT for cylinders Series 61, 63, 6E

Suitable for ISO 15552 (previous DIN/ISO 6431) cylinders Series 61, 63, 6E, ø 32, 40, 50, 63, 80 and 100. These guides do not need lubrication. For applicable loads see graph No 1.

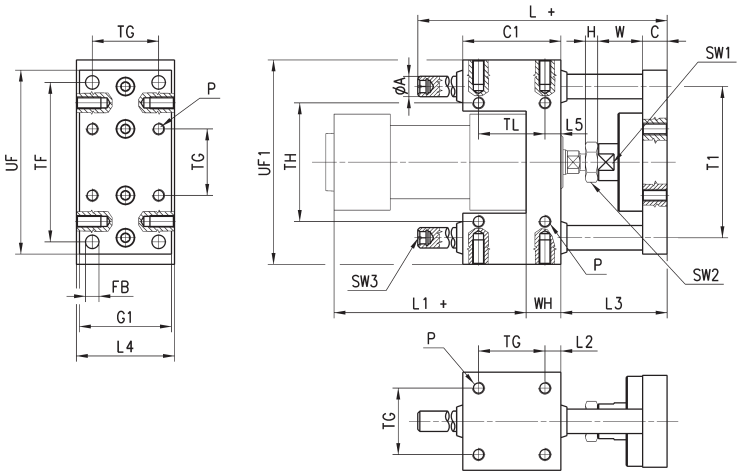

Supplied with:
4x fixing screws.

Draw note:
+ = add the stroke

DIMENSIONS																									
Ø	TF	TG	TH	øA	T1	P	FB	UF	G1	UF1	L	C1	H	W	C	L1	WH	L2	L3	L4	L5	TL	SW1	SW2	SW3
32	78	32,5	58	12	74	M6	6,6	90	45	100	106	48	6	22	12	94	17	7,8	52	48	7,8	32,5	15	17	6
40	84	38	64	12	80	M6	6,6	100	50	106	117	58	7	22	12	105	21	10	53	56	10	38	15	19	6
50	100	46,5	80	16	96	M8	9	120	60	125	129	59	8	26	15	106	25	6,2	64	66	6,3	46,5	22	24	6
63	105	56,5	95	16	104	M8	9	125	70	132	146	76	8	26	15	121	25	9,8	64	76	9,8	56,5	22	24	6
80	130	72	130	20	130	M10	11	155	90	165	170	90	9	32	16	128	34	9	72	98	20	50	27	30	6
100	150	89	150	20	150	M10	11	175	110	185	190	110	9	32	16	138	39	10,5	72	118	20	70	27	30	6

Guides Mod. 45NHT for cylinders Series 61, 63, 6E

Suitable for ISO 15552 (previous DIN/ISO 6431) cylinders Series 61, 63, 6E, ø 32, 40, 50, 63, 80 and 100. These guides do not need lubrication. For applicable loads see graph No 3.

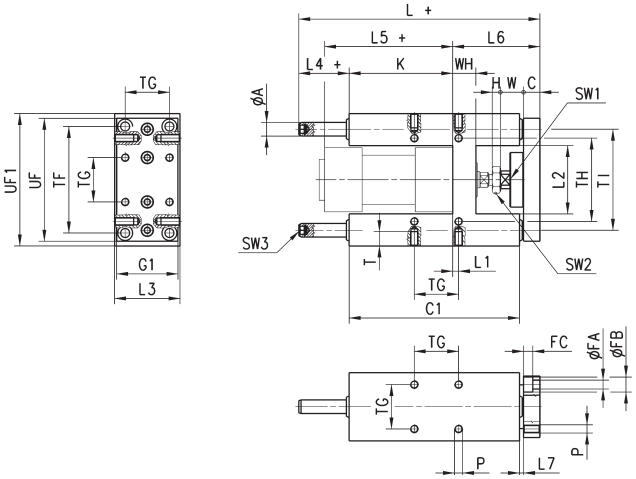

Supplied with:
4x fixing screws.

Draw note:
+ = add the stroke

DIMENSIONS																													
Ø	TF	TG	TH	TI	UF	G1	UF1	øA	WH	C1	H	W	C	K	L	L1	L2	L3	L4	L5	L6	L7	P	T	øFA	øFB	FC	SW1	SW2	SW3
32	78	32.5	61	74	90	45	97	12	17	125	6	17	12	76	177	4.3	50.2	50	37	94	64	3	M6	14	6.5	11	6.8	13	17	6
40	84	38	69	87	110	54	115	16	21	140	7	22	12	81	192	11	58.2	58	37	105	74	3	M6	14	6.5	11	6.8	15	19	6
50	100	46.5	85	104	130	63	137	20	26	149	8	26	15	78.5	205	19.8	70.2	70	37.5	106	89	3	M8	16	9	15	9	22	24	6
63	105	56.5	100	119	145	80	152	20	26	178	8	26	15	111	237	15.3	85.2	85	37	121	89	7	M8	16	9	15	9	22	24	6
80	130	72	130	148	180	100	189	25	34	195	9	32	20	128	280	21	105.4	105	42	128	110	23	M10	20	11	18	11	27	30	6
100	150	89	150	172	200	120	213	25	39	220	9	32	20	128	280	24.5	130.4	130	37	138	115	3	M10	20	11	18	11	27	30	6

Guides Mod. 45NHB for cylinders Series 61, 63, 6E

Suitable for ISO 15552 (previous DIN/ISO 6431) cylinders Series 61, 63, 6E, ø 32, 40, 50, 63, 80 and 100. To lubricate these guides, use the special lubricator. For applicable loads see graph No 2.

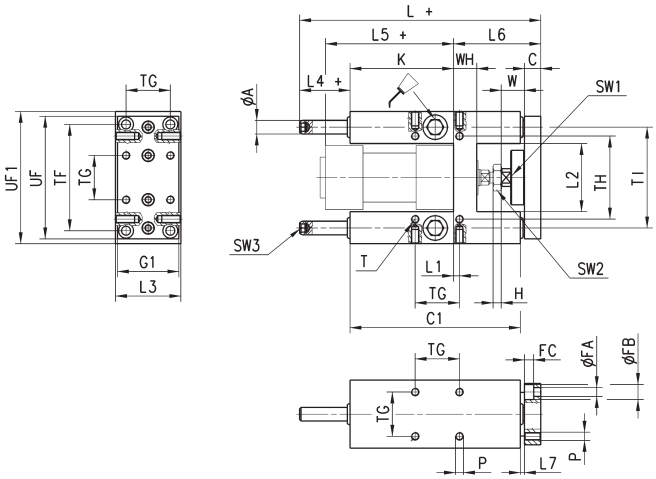

Supplied with:
4x fixing screws.

Draw note:
+ = add the stroke

DIMENSIONS																													
Ø	TF	TG	TH	TI	UF	G1	UF1	øA	WH	C1	H	W	C	K	L	L1	L2	L3	L4	L5	L6	L7	P	T	øFA	øFB	FC	SW1	SW2	SW3
32	78	32.5	61	74	90	45	97	12	17	125	6	17	12	76	177	4.3	50.2	50	37	94	64	3	M6	14	6.5	11	6.8	13	17	6
40	84	38	69	87	110	54	115	16	21	140	7	22	12	81	192	11	58.2	58	37	105	74	3	M6	14	6.5	11	6.8	15	19	6
50	100	46.5	85	104	130	63	137	20	26	149	8	26	15	78,5	237	19.8	70.2	70	69.5	106	89	3	M8	16	9	15	9	22	24	6
63	105	56.5	100	119	145	80	152	20	26	178	8	26	15	111	237	15.3	85.2	85	37	121	89	7	M8	16	9	15	9	22	24	6
80	130	72	130	148	180	100	189	25	34	195	9	32	20	128	280	21	105.4	105	42	128	110	23	M10	20	11	18	11	27	30	6
100	150	89	150	172	200	120	213	25	39	220	9	32	20	128	280	24.5	130.4	130	37	138	115	3	M10	20	11	18	11	27	30	6

Series QN short-stroke cylinders

Single-acting, non magnetic ø 8, 12, 20, 32, 50, 63 mm

Series QN single-acting short-stroke cylinders have been designed so that they can be installed in very small spaces. Due to the compactness and sturdiness of these cylinders, they are mainly suitable for positioning and locking.

The available strokes are indicated in the tables.

GENERAL DATA

Type of construction	compact
Operation	single-acting
Materials	aluminium body - NBR seals - other materials in stainless steel and brass
Operating pressure	P. min 2 bar P. max 10 bar
Operating temperature	0°C ÷ 80°C (with dry air - 20°C)
Fluid	clean air, without lubrication. If lubricated air is used, it is recommended to use oil ISO VG32. Once applied the lubrication should never be interrupted.
Bore	ø 8, 12, 20, 32, 50, 63
Stroke	see table
Type of mounting	by means of screws in the body

STANDARD STROKES FOR CYLINDERS SERIES QN

STANDARD STROKES				
Ø	4	5	10	25
8	×			
12	×		×	
20	×		×	
32		×	×	×
50			×	×
63			×	×

CODING EXAMPLE

QN	1	A	50	A	25

QN	SERIES	
1	OPERATING 1 = single-acting	PNEUMATIC SYMBOL CS01
A	MATERIALS A = rolled stainless steel rod - aluminium body	
50	BORE 08 = 8 mm 12 = 12 mm 20 = 20 mm 32 = 32 mm 50 = 50 mm 63 = 63 mm	
A	TYPE OF DESIGN A = standard	
25	STROKE (see the table)	

PNEUMATIC SYMBOLS

The pneumatic symbols which have been indicated in the CODING EXAMPLE are shown below.

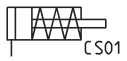

Short-stroke cylinders Series QN - bores ø 8, 12 and 20

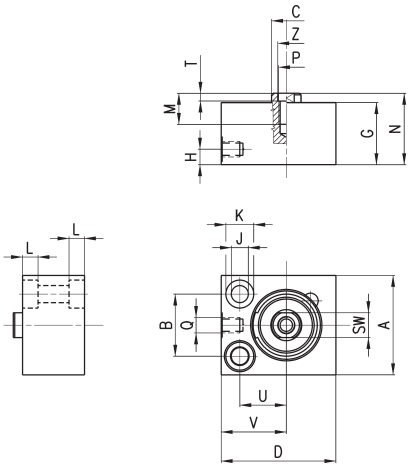

DIMENSIONS																			
Mod.	Ø	A h8	B	øC	D	G	H	øJ	øK	L	M	N	P	Q H13	SW	T+0,1	U	V	Z+0,10
QN1A08A04	8	18	11	4	20	16	5	3,2	5,8	3	-	17	-	M5	-	-	8	13,5	-
QN1A12A04	12	20	13	5	25	16	5	3,2	5,8	3	-	17	-	M5	-	-	9	16	-
QN1A12A10	12	20	13	5	25	26	5	3,2	5,8	3	-	30	-	M5	-	-	9	16	-
QN1A20A04	20	32	20	10	37	20	5	5,5	9	5	8	21	M5	M5	8	2,5	15	21	5,5
QN1A20A10	20	32	20	10	37	32	5	5,5	9	5	8	33	M5	M5	8	2,5	15	21	5,5

Short-stroke cylinders Series QN - bores ø 32, 50 and 63

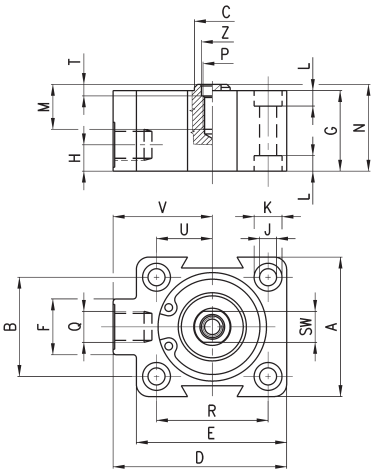

DIMENSIONS																						
Mod.	Ø	A h8	B	øC	D	E	F	G	H	øJ	øK	L	M	N	P	Q H13	R	SW	T+0,1	U	V	Z+0,10
QN1A32A05	32	45	32	12	56	48,5	18	26	8,5	5,5	9	5	14,5	27	M6	G1\8	36	10	2,5	18	32	7
QN1A32A10	32	45	32	12	56	48,5	18	32	8,5	5,5	9	5	14,5	33	M6	G1\8	36	10	2,5	18	32	7
QN1A32A25	32	45	32	12	56	48,5	18	57,5	8,5	5,5	9	5	14,5	58,5	M6	G1\8	36	10	2,5	18	32	7
QN1A50A10	50	64	50	16	72	64	20	30	8,5	6,5	10,5	6,3	15,5	31	M8	G1\8	50	13	3,5	25	40	8,5
QN1A50A25	50	64	50	16	72	64	20	57,5	8,5	6,5	10,5	6,3	15,5	58,5	M8	G1\8	50	13	3,5	25	40	8,5
QN1A63A10	63	80	62	16	88	80	20	35	8,5	8,5	14	8,5	14,5	36	M8	G1\8	62	13	3,5	31	48	8,5
QN1A63A25	63	80	62	16	88	80	20	60,5	8,5	8,5	14	8,5	14,5	62,5	M8	G1\8	62	13	3,5	31	48	8,5

Series QP - QPR short-stroke cylinders

Series QP: single and double-acting, magnetic
Series QPR: double-acting magnetic, non-rotating
ø 12, 16, 20, 25, 32, 40, 50, 63, 80, 100 mm

Series QP - QPR cylinders are available in 10 bore sizes, from ø12 to ø100. Their compact dimension allows the installation in small spaces. Because of their particular construction, they can be mounted by means of feet or trunnion.

The guides are manufactured in the external profile parallel to the sliding axis on three sides. These are used to locate the switches that sense the piston position. The non rotating guides make the QPR suitable for supply operations and for handling equipment.

GENERAL DATA

Type of construction	Series QP: compact profile Series QPR: compact with non rotating guides
Operation	Series QP: single and double-acting Series QPR: double-acting
Materials	body: anodized AL rod: rolled stainless steel piston seals: PU rod seals: PU (Ø 12 ÷ 25 mm) - NBR (Ø 32 ÷ 100 mm)
Operating temperature	0°C ÷ 80°C (with dry air -20°C)
Assembly	by means of screws or brackets
Operating pressure	1 ÷ 10 bar (double-acting) 2 ÷ 10 bar (single-acting)
Fluid	filtered air, without lubrication. If lubricated air is used, it is recommended to use oil ISOVG32. Once applied the lubrication should never be interrupted.
Strokes (min-max)	Series QP: 1 ÷ 150 mm (ø12 ÷ ø 25) - 1 ÷ 200 mm (ø 32 ÷ ø 100) Series QPR: 1 ÷ 50 mm (ø 12) - 1 ÷ 75 mm (ø 16) - 1 ÷ 100 mm (ø 20 ÷ ø 100)
Strokes	the minimum stroke for use of the sensors is 10 mm
Bores	ø 12, 16, 20, 25, 32, 40, 50, 63, 80, 100

STANDARD STROKES FOR SHORT-STROKE CYLINDERS SERIES QP AND QPR

■ = Double-acting ✖ = Single-acting ● = Non-rotating

STANDARD STROKES														
Ø	5	10	15	20	25	30	35	40	45	50	60	75	80	100
12	■ ✖ ●	■ ✖ ●	■ ✖ ●	■ ✖	■ ✖ ●	■ ●	■	■	■					
16	■ ✖ ●	■ ✖ ●	■ ✖ ●	■ ✖ ●	■ ✖ ●	■ ●	■ ●	■ ●	■ ●	■ ●	■ ●	■ ●	■	■
20	■ ✖ ●	■ ✖ ●	■ ✖ ●	■ ✖ ●	■ ✖ ●	■ ●	■ ●	■ ●	■ ●	■ ●	■ ●	■ ●	■ ●	■ ●
25	■ ✖ ●	■ ✖ ●	■ ✖ ●	■ ✖ ●	■ ✖ ●	■ ●	■ ●	■ ●	■ ●	■ ●	■ ●	■ ●	■ ●	■ ●
32	■ ✖ ●	■ ✖ ●	■ ✖ ●	■ ✖ ●	■ ✖ ●	■ ●	■ ●	■ ●	■ ●	■ ●	■ ●	■ ●	■ ●	■ ●
40	■ ✖ ●	■ ✖ ●	■ ✖ ●	■ ✖ ●	■ ✖ ●	■ ●	■ ●	■ ●	■ ●	■ ●	■ ●	■ ●	■ ●	■ ●
50	■ ✖ ●	■ ✖ ●	■ ✖ ●	■ ✖ ●	■ ✖ ●	■ ●	■ ●	■ ●	■ ●	■ ●	■ ●	■ ●	■ ●	■ ●
63	■ ✖ ●	■ ✖ ●	■ ✖ ●	■ ✖ ●	■ ✖ ●	■ ●	■ ●	■ ●	■ ●	■ ●	■ ●	■ ●	■ ●	■ ●
80	■ ✖ ●	■ ✖ ●	■ ✖ ●	■ ✖ ●	■ ✖ ●	■ ●	■ ●	■ ●	■ ●	■ ●	■ ●	■ ●	■ ●	■ ●
100	■ ✖ ●	■ ✖ ●	■ ✖ ●	■ ✖ ●	■ ✖ ●	■ ●	■ ●	■ ●	■ ●	■ ●	■ ●	■ ●	■ ●	■ ●

CODING EXAMPLE

QP	2	A	050	A	050

QP	SERIES QP = standard QPR = standard non-rotating	
2	OPERATION 1 = single-acting, front spring (only QP) 2 = double-acting 3 = double-acting, through-rod	PNEUMATIC SYMBOLS CS09 CD07 CD14
A	MATERIALS A = rolled stainless steel rod - AL tube profile	
050	BORE 012 = 12 mm 016 = 16 mm 020 = 20 mm 025 = 25 mm 032 = 32 mm 040 = 40 mm 050 = 50 mm 063 = 63 mm 080 = 80 mm 100 = 100 mm	
A	TYPE OF MOUNTING A = standard	
050	STROKE (see the table)	
	= standard V = FKM rod seal W = all FKM seals (Ø 12 excepted)	

PNEUMATIC SYMBOLS

The pneumatic symbols which have been indicated in the CODING EXAMPLE are shown below.

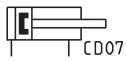

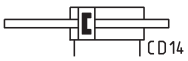

ACCESSORIES FOR SHORT-STROKE CYLINDERS SERIES QP

Foot mount Mod. B

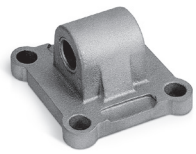

Male trunnion Mod. L

All accessories are supplied separately.

TORQUE MOMENT ACCORDING TO STROKE C

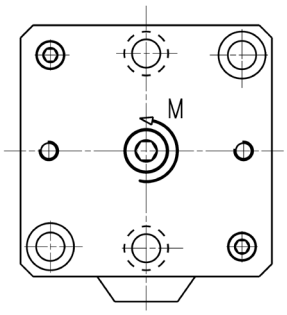

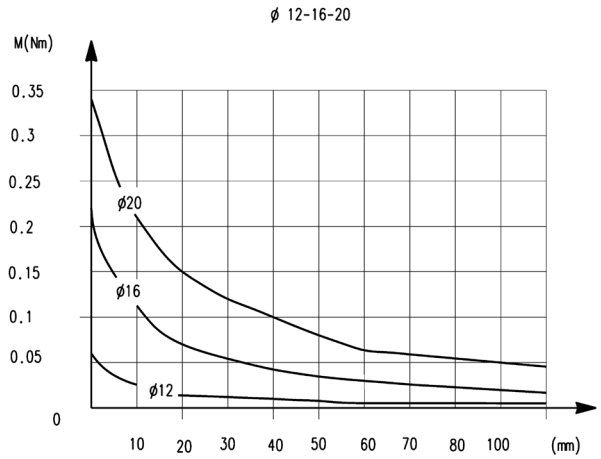

TORQUE MOMENT ACCORDING TO STROKE C

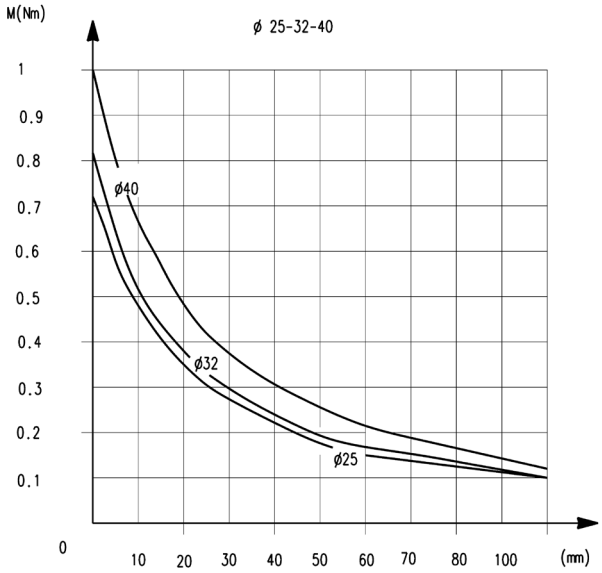

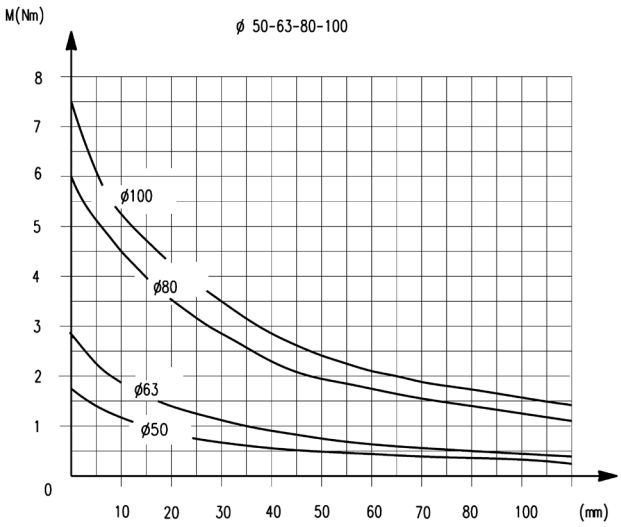

TRANSVERSAL LOAD ACCORDING TO PROJECTION " X "

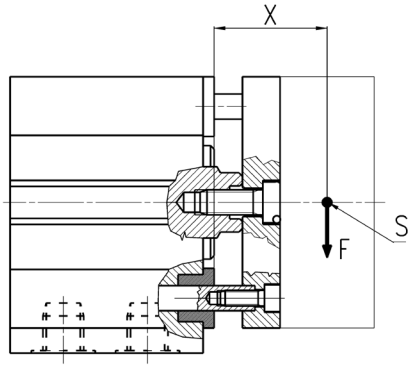

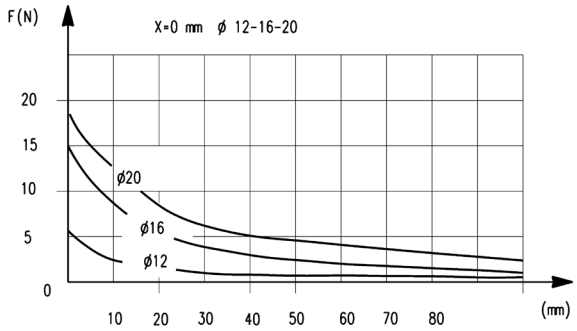

TRANSVERSAL LOAD ACCORDING TO PROJECTION " X "

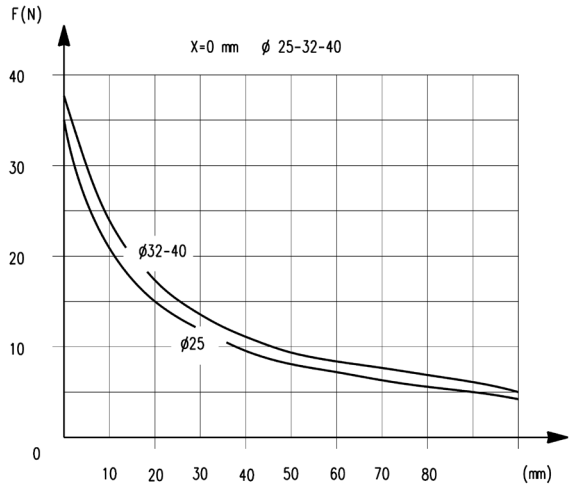

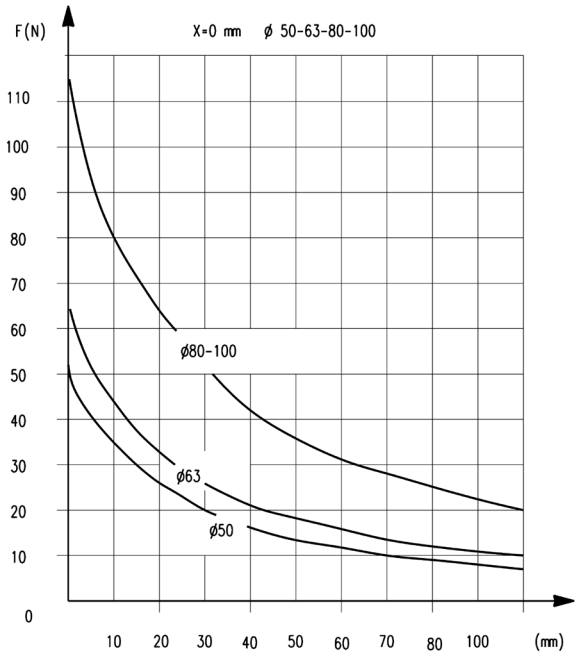

F = transversal force

Short-stroke cylinders Series QP

Note:
The cylinder's end stop must be provided externally.
For single-acting cylinders ø 12, 16, 20 and 25 add 5 mm to G+, G1+ and N+ dimensions.

+ = add the stroke

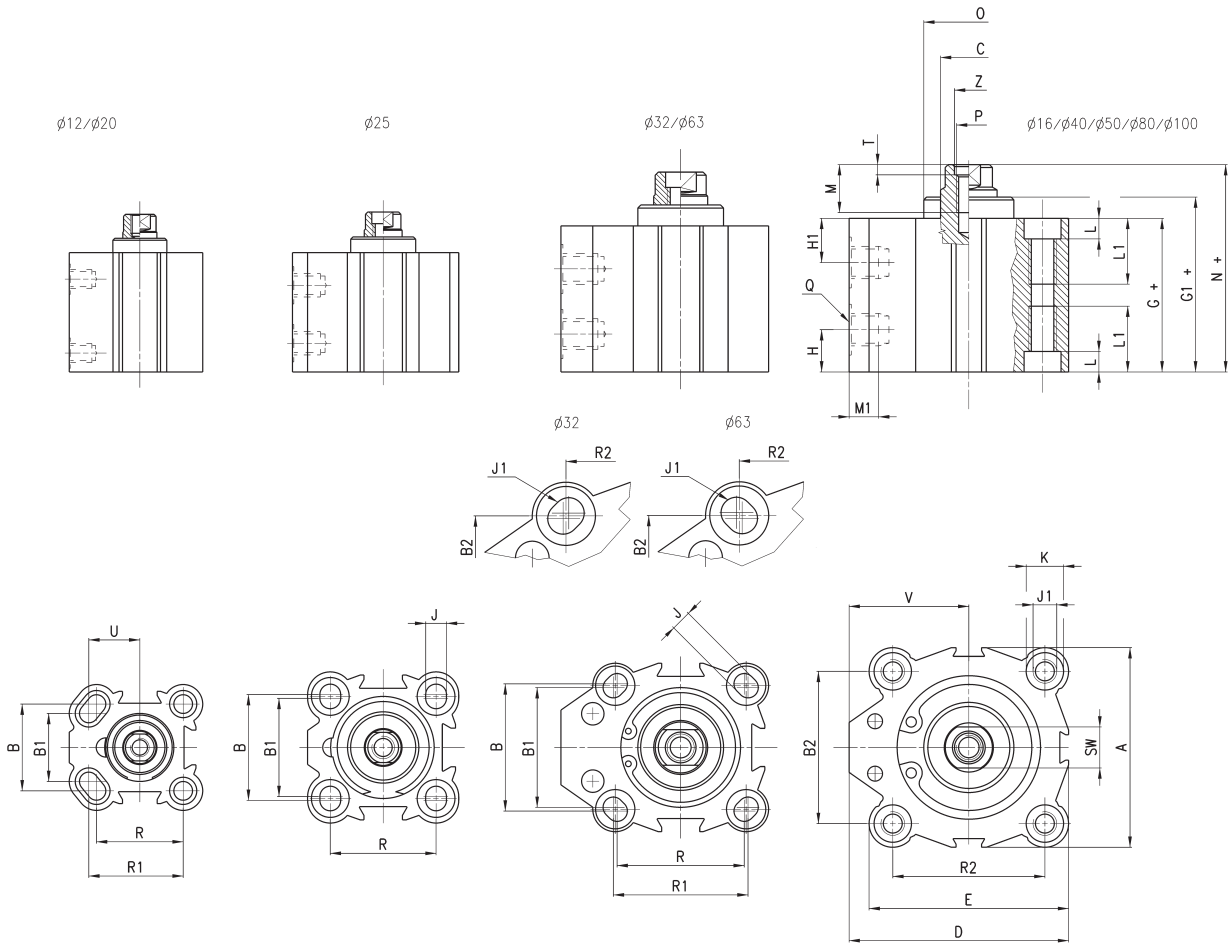

DIMENSIONS																												
Ø	A	B	B1	B2	øC	D	E	G +	G1 +	H1	H	J	J1	K	L	L1	M	M1	N +	øO	P	Q	R	R1	R2	SW	T	U	V	Z
12	23.8	15.5	13	-	6	25	25	29.6	29.6	12.3	7.8	3.5	-	5.8	3	-	5.5	4.5	32.9	-	M3	M5	15.5	16.75	-	5	-	9	13.15	-
16	29	20	-	-	8	29	29	32	32.4	10.9	8.7	3.5	-	5.8	3	-	8	4.5	36.4	16.6	M4	M5	20	-	-	6	-	-	14.5	-
20	37	25.5	20	-	10	39.25	39.25	31.2	31.7	9.8	9.8	5.5	-	9	6	-	8	4.5	36	19.5	M6	M5	25.5	27.75	-	8	-	15	20.75	-
25	40	28	26	-	10	40	40	32.1	33.5	8	6.9	5.5	-	10	5.5	-	8	4.5	37.5	22	M6	M5	28	-	-	8	-	-	20	-
32	45	34	32	33	12	55.5	47	39.5	40	9.5	9.5	5.5	M8	10.5	6	21	10	7.5	44	23.5	M6	G1\8	34	36	35	10	2.5	-	32	7
40	52	-	-	40	16	57	52	42.4	43.4	10.7	10.7	5.5	M8	9	6	21	13.5	7.5	47.9	29.6	M8	G1\8	-	-	40	13	3.5	-	31	8.5
50	64	-	-	50	16	72	64	42.2	44	11.2	11.2	6.5	M8	10.5	6	21	13.5	9	48.4	37.5	M8	G1\4	-	-	50	13	3.5	-	40	8.5
63	80	62	60	61	20	88	80	49.5	50.1	13	13	8.5	M12	15	8.5	31.5	13.5	9	54	50	M8	G1\4	60	62	61	17	4	-	48	8.5
80	98	-	-	77	25	104	98	57.5	58.1	16.2	16.2	10.5	M12	17	10.5	31.5	15	10.5	63.5	62	M16	G3\8	-	-	77	22	4	-	55	16.5
100	117	-	-	94	25	123.5	117	68.5	69.1	20.3	20.3	10.5	M12	17	10.5	31.5	15	10.5	74.5	80	M16	G3\8	-	-	94	22	4	-	65	16.5

Short-stroke cylinders Series QP

Note:
The cylinder's end stop must be provided externally.

+ = add the stroke once
+ = add the stroke twice

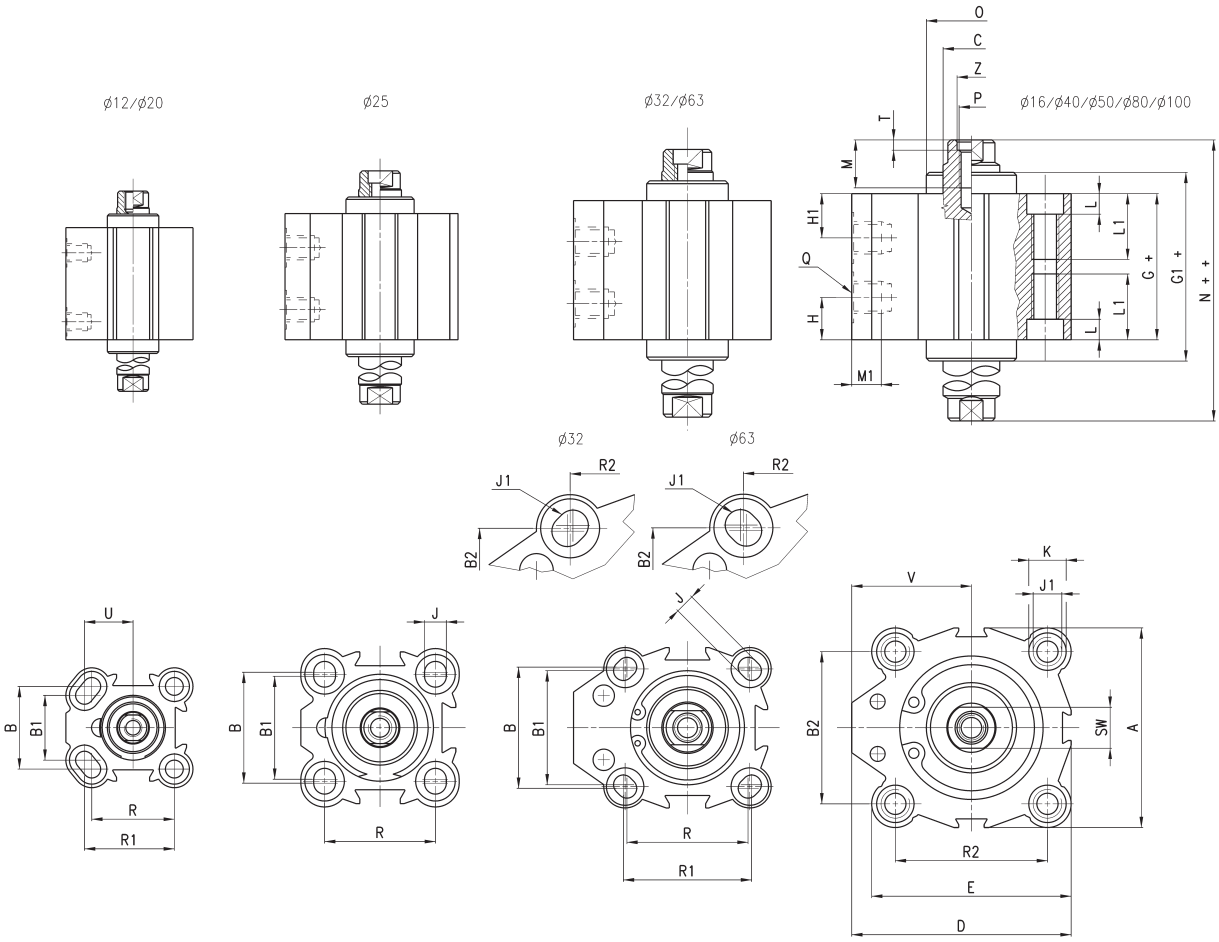

DIMENSIONS																												
Ø	A	B	B1	B2	øC h8	D	E	G+	G1+	H1	H	J	J1	K	L	L1	M	M1	N + +	øO	P	Q	R	R1	R2	SW	T	U	V	Z
12	23.8	15.5	13	-	6	25	25	34.5	34.5	12.3	12.3	3.5	-	5.8	3	-	5.5	4.5	41	-	M3	M5	15.5	16.75	-	5	-	9	13.15	-
16	29	20	-	-	8	29	29	38	38.8	10.9	10.9	3.5	-	5.8	3	-	8	4.5	46.4	16.6	M4	M5	20	-	-	6	-	-	14.5	-
20	37	25.5	20	-	10	39.25	39.25	38.1	39.1	9.8	9.8	5.5	-	9	6	-	8	4.5	47.7	19.5	M6	M5	25.5	27.75	-	8	-	15	20.75	-
25	40	28	26	-	10	40	40	36.3	39.1	8	8	5.5	-	10	5.5	-	8	4.5	47.1	22	M6	M5	28	-	-	8	-	-	20	-
32	45	34	32	33	12	55.5	47	39.5	40.5	9.5	9.5	5.5	M8	10.5	6	21	10	7.5	48.5	23.5	M6	G1\8	34	36	35	10	2.5	-	32	7
40	52	-	-	40	16	57	52	42.4	44.4	10.7	10.7	5.5	M8	9	6	21	13.5	7.5	53.4	29.6	M8	G1\8	-	-	40	13	3.5	-	31	8.5
50	64	-	-	50	16	72	64	42.2	45.8	11.2	11.2	6.5	M8	10.5	6	21	13.5	9	54,8	37,5	M8	G1\4	-	-	50	13	3,5	-	40	8,5
63	80	62	60	61	20	88	80	49.5	50.7	13	13	8.5	M12	15	8.5	31.5	13.5	9	58.5	50	M8	G1\4	60	62	61	17	4	-	48	8.5
80	98	-	-	77	25	104	98	57.5	58.7	16.2	16.2	10.5	M12	17	10.5	31.5	15	10.5	69.5	62	M16	G3\8	-	-	77	22	4	-	55	16.5
100	117	-	-	94	25	123.5	117	68.5	69.7	20.3	20.3	10.5	M12	17	10.5	31.5	15	10.5	80.5	80	M16	G3\8	-	-	94	22	4	-	65	16.5

Short-stroke cylinder Series QPR

Note:
The cylinder's end stop must be provided externally.

+ = add the stroke

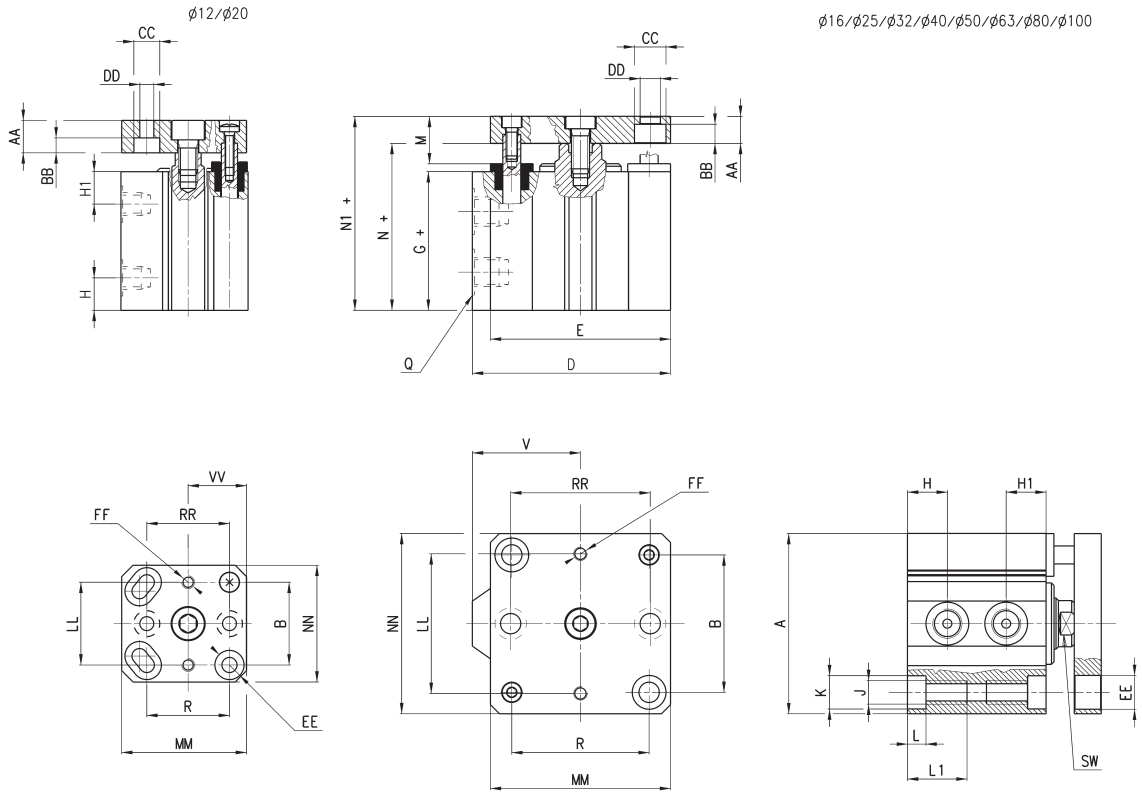

DIMENSIONS																										
Ø	A	B	D	E	G +	H1	H	J	K	L	L1	N +	N1 +	Q	R	SW	V	AA	BB	øCC	øDD	EE	FF	LL	MM	NN	RR	VV
12	23.8	15.5	25	25	29.6	12.3	7.8	3.5	5.8	3	-	32.9	37.9	M5	15.5	5	13.15	5	3.5	6.2	3.2	5.8	M3	15.5	25	24	15.5	12
16	29	20	29	29	32	10.9	8.7	3.5	5.8	3	-	36.4	41.4	M5	20	6	14.5	5	3.5	6.2	3.2	6.5	M3	20	28	28	20	-
20	37	25.5	39.25	39.25	31.2	9.8	9.8	5.5	9	6	-	36	46	M5	25.5	8	20.75	10	4.6	8	4.2	9	M4	25.5	38.5	36	25.5	18
25	40	28	40	40	32.1	8	6.9	5.5	10	5.5	-	37.5	47.5	M5	28	8	20	10	4.6	8	4.2	10	M4	27	40	40	28	-
32	45	33	55.5	47	39.5	9.5	9.5	M8	10.5	6	21	44	54	G1\8	35	10	32	10	6	9	5.5	9	M5	32	47	45	36	-
40	52	40	57	52	42.4	10.7	10.7	M8	9	6	21	47.9	57.9	G1\8	40	13	31	10	6	9	5.5	9	M5	40	52	50	40	-
50	64	50	72	64	42.2	11.2	11.2	M8	10.5	6	21	48.4	60.4	G1\4	50	13	40	12	6.8	10.5	6.5	10	M6	50	65	65	50	-
63	80	61	88	80	49.5	13	13	M12	15	8.5	31.5	54	66	G1\4	61	17	48	12	8.5	14	9	15	M6	62	80	80	62	-
80	98	77	104	98	57.5	16.2	16.2	M12	17	10.5	31.5	63.5	78.5	G3\8	77	22	55	15	10	16.5	11	17	M8	77	100	100	77	-
100	117	94	123.5	117	68.5	20.3	20.3	M12	17	10.5	31.5	74.5	89.5	G3\8	94	22	65	15	10	16.5	11	17	M8	94	115	115	94	-

Short-stroke cylinder Series QPR - through-rod

Note:
The cylinder's end stop must be provided externally.

+ = add the stroke once
++ = add the stroke twice

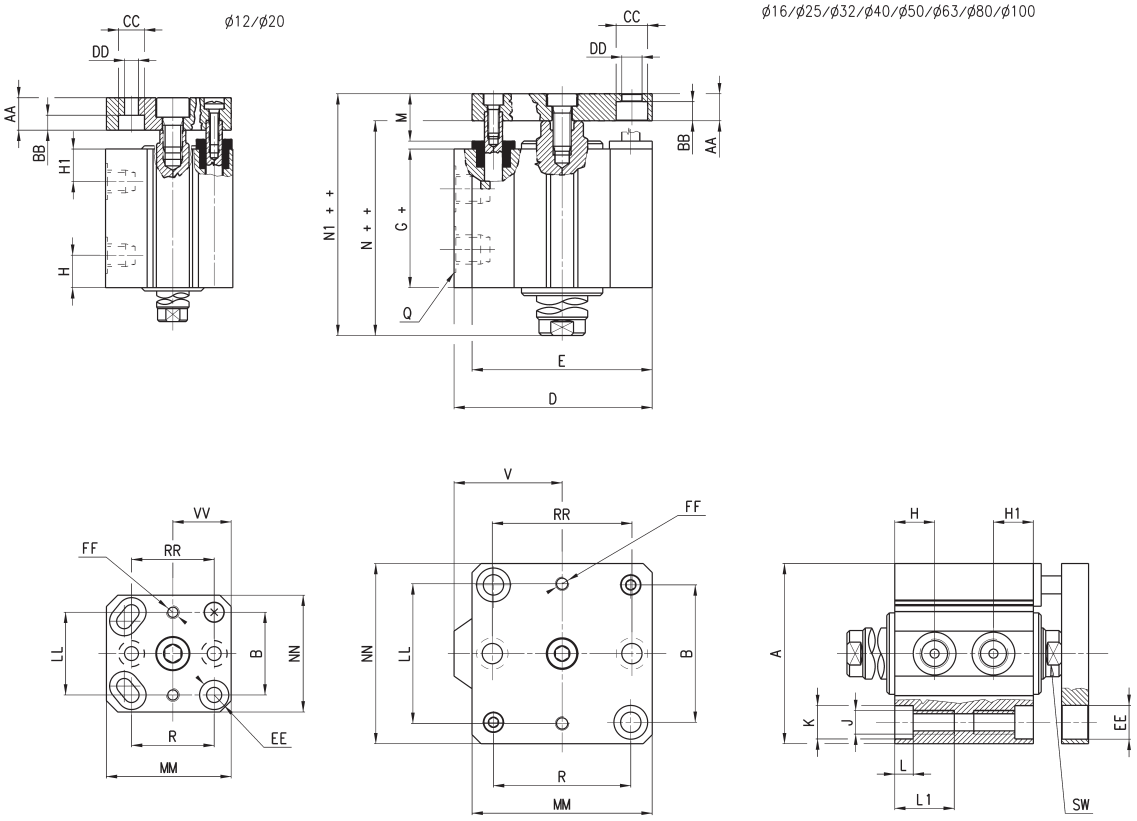

DIMENSIONS																										
Ø	A	B	D	E	G +	H1	H	J	K	L	L1	N + +	N1 + +	Q	R	SW	V	AA	BB	øCC	øDD	EE	FF	LL	MM	NN	RR	VV
12	23.8	15.5	25	25	37.3	12.3	12.3	3.5	5.8	3	-	41	46	M5	15.5	5	13.15	5	3.5	6.2	3.2	5.8	M3	15.5	25	24	15.5	12
16	29	20	29	29	38	10.9	10.9	3.5	5.8	3	-	47	52	M5	20	6	14.5	5	3.5	6.2	3.2	6.5	M3	20	28	28	20	-
20	37	25.5	39.25	39.25	38.1	9.8	9.8	5.5	9	6	-	47.7	57.7	M5	25.5	8	20.75	10	4.6	8	4.2	9	M4	25.5	38.5	36	25.5	18
25	40	28	40	40	36.3	8	8	5.5	10	5.5	-	47.1	57.1	M5	28	8	20	10	4.6	8	4.2	10	M4	27	40	40	28	-
32	45	33	55.5	47	39.5	9.5	9.5	M8	10.5	6	21	48.5	58.5	G1\8	35	10	32	10	6	9	5.5	9	M5	32	47	45	36	-
40	52	40	57	52	42.4	10.7	10.7	M8	9	6	21	53.4	63.4	G1\8	40	13	31	10	6	9	5.5	9	M5	40	52	50	40	-
50	64	50	72	64	42.2	11.2	11.2	M8	10.5	6	21	54.8	66.8	G1\4	50	13	40	12	6.8	10.5	6.5	10	M6	50	65	65	50	-
63	80	61	88	80	49.5	13	13	M12	15	8.5	31.5	58.5	70.5	G1\4	61	17	48	12	8.5	14	9	15	M6	62	80	80	62	-
80	98	77	104	98	57.5	16.2	16.2	M12	17	10.5	31.5	69.5	84.5	G3\8	77	22	55	15	10	16.5	11	17	M8	77	100	100	77	-
100	117	94	123.5	117	68.5	20.3	20.3	M12	17	10.5	31.5	80.5	95.5	G3\8	94	22	65	15	10	16.5	11	17	M8	94	115	115	94	-

Male trunnion bracket Mod. L

Material: Aluminium

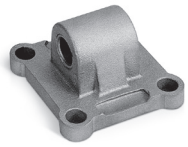

Supplied with:
1x trunnion
4x screws

+ = add the stroke

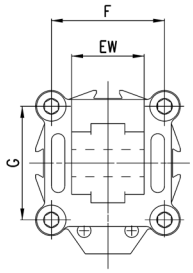

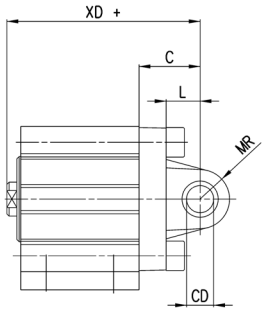

DIMENSIONS									
Mod.	Ø	CD^{H9}	MR	L	C	XD+	F	G	EW
L-QP-32	32	10	9	12	22	66	33	35	26
L-QP-40	40	12	13	15	25	73	40	40	28
L-QP-50	50	12	13	15	27	75,5	50	50	32
L-QP-63	63	16	15	20	32	86	61	61	40
L-QP-80	80	16	15	24	36	99,5	77	77	50
L-QP-100	100	20	18	29	41	115,5	94	94	60

Feet bracket Mod. B

Material: zinc-plated steel.

Supplied with:
2x feet
4x screws

+ = add the stroke

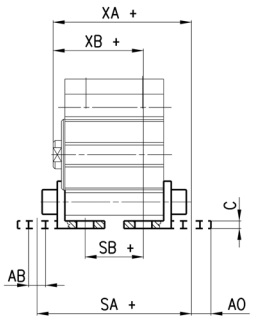

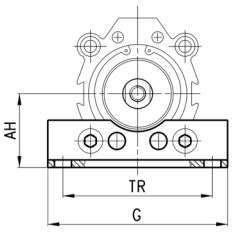

DIMENSIONS											
Mod.	Ø	C	SA+	XA+	SB+	XB+	TR	G	AB	AH	AO
B-QP-32	32	3	61.9	55.2	23.1	35.8	57	71	6.6	30	8.8
B-QP-40	40	3	64.8	59.1	26	39.7	64	78	6.6	33	8.8
B-QP-50	50	4	71.6	63.1	20.8	37.7	79	95	9	39	10.3
B-QP-63	63	4	81.9	70.2	25.1	41.8	95	113	11	46	13.8
B-QP-80	80	6	96.5	83	30.5	49	118	140	13	59	10.5
B-QP-100	100	6	114.5	97.5	22.5	51.5	137	162	13	71	17

Series QL short-stroke cylinders

New

Series QL: double-acting, magnetic and non magnetic
ø 12, 16, 20, 25, 32, 40, 50 mm

- Compact design
- Low weight
- Easy installation

Series QL short-stroke cylinders are available in seven different bore sizes from 12 mm to 50 mm and are designed to cover a wide range of application needs, from light duties in packaging or assembly through to the demanding requirements of handling components for woodworking. The low weight of the aluminium body and the compact design makes this cylinder range quick and easy to install, even in confined or awkward spaces. Series QL is available in double acting, magnetic and non-magnetic designs. A full range of accessories such as standard, large and narrow mounting feet enhance the applicability and usability of the range.

GENERAL DATA

Type of construction	compact profile
Operation	double-acting
Materials	body: anodized AL rod: rolled stainless steel piston seals: NBR rod seals: PU
Operating temperature	0°C ÷ 80°C (with dry air -20°C)
Mounting	by means of screws or brackets
Operating pressure	1 ÷ 10 bar (double-acting)
Fluid	filtered air class 7.8.4 as indicated by ISO 8573-1. If lubricated air is used, it is recommended to use oil ISOVG32. Once applied the lubrication should never be interrupted.
Strokes	see available strokes table
Bores	ø 12, 16, 20, 25, 32, 40, 50
Use with sensors	CSC

STANDARD STROKES FOR SHORT-STROKE CYLINDERS SERIES QL

■ = Double-acting ✖ = Double-acting long strokes ● = Double-acting through rod

STANDARD STROKES																		
Ø	5	10	15	20	25	30	35	40	45	50	75	100	125	150	175	200	250	300
12	■ ●	■ ●	■ ●	■ ●	■ ●	■ ●												
16	■ ●	■ ●	■ ●	■ ●	■ ●	■ ●												
20	■ ●	■ ●	■ ●	■ ●	■ ●	■ ●	■ ●	■ ●	■ ●	■ ●								
25	■ ●	■ ●	■ ●	■ ●	■ ●	■ ●	■ ●	■ ●	■ ●	■ ●								
32	■ ●	■ ●	■ ●	■ ●	■ ●	■ ●	■ ●	■ ●	■ ●	■ ●	■ ●	■ ●	✖	✖	✖	✖	✖	✖
40	■ ●	■ ●	■ ●	■ ●	■ ●	■ ●	■ ●	■ ●	■ ●	■ ●	■ ●	■ ●	✖	✖	✖	✖	✖	✖
50		■ ●	■ ●	■ ●	■ ●	■ ●	■ ●	■ ●	■ ●	■ ●	■ ●	■ ●	✖	✖	✖	✖	✖	✖

CODING EXAMPLE

QL	M	2	A	032	A	050

QL	SERIES	
M	VERSION M = Magnetic N = Non magnetic	
2	OPERATION 2 = double-acting 3 = double-acting, through-rod (only for M version)	PNEUMATIC SYMBOLS CD08 (M) - CDB1 (N) CD12 (M)
A	MATERIALS A = rolled stainless steel rod - AL tube profile	
032	BORE 012 = 12 mm 016 = 16 mm 020 = 20 mm 025 = 25 mm 032 = 32 mm 040 = 40 mm 050 = 50 mm	
A	CONSTRUCTION A = Standard L = Long strokes (>100mm)	
050	STROKE (see the stroke table)	
	= Standard M = Male rod	
	= Standard EX = Atex	

PNEUMATIC SYMBOLS

The pneumatic symbols which have been indicated in the CODING EXAMPLE are shown below.

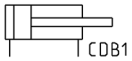

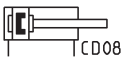

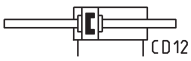

ACCESSORIES FOR SHORT-STROKE CYLINDERS SERIES QL

Foot mount Mod. B-QL

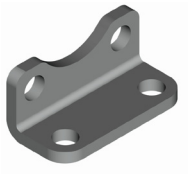

Narrow (shorter) foot mount Mod. BN-QL

All accessories are supplied separately.

SENSOR GROOVES POSITIONING:

Ø12

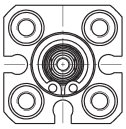

Ø16

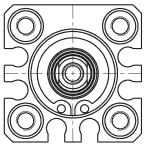

Ø20/Ø25

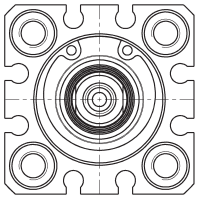

Ø32/Ø40/Ø50

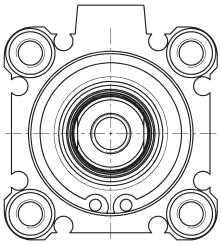

Short-stroke non magnetic cylinders Series QL

+ = add the stroke

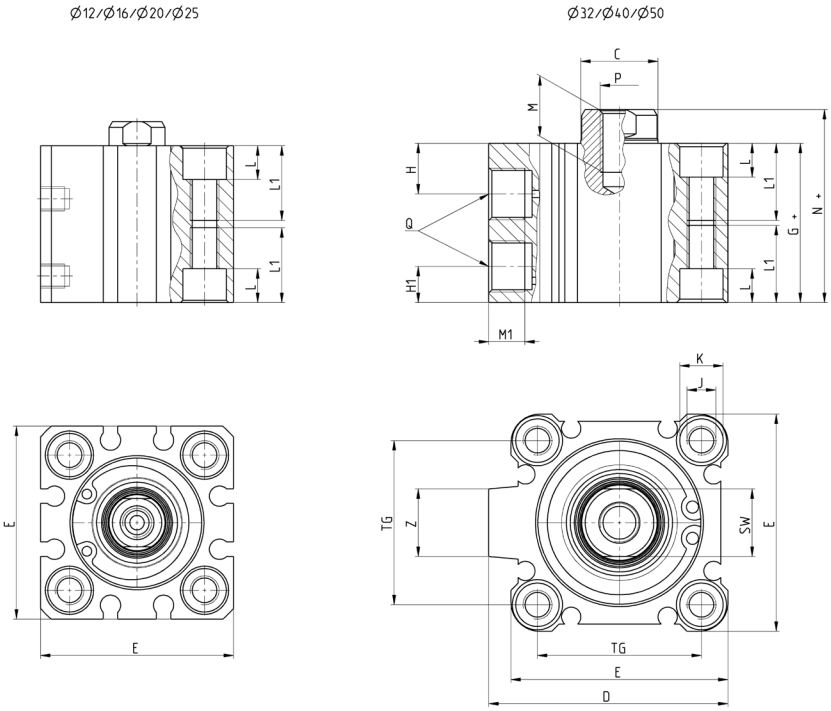

DIMENSIONS																			
Ø	Strokes range (mm)	øC	D	E	G	H	H1	J	øK	L	L1	M	M1	N	P	Q	SW	TG	Z
12	5 ÷ 30	6	-	25	17	7.5	5	M4x0.7	6.5	3.5	11	6	6	20.5	M3x0.5	M5x0.8	5	15.5	-
16	5 ÷ 30	8	-	29	18.5	9	5	M4x0.7	6.5	3.5	11	8	6	22	M4x0.7	M5x0.8	6	20	-
20	5 ÷ 50	10	-	35.5	19.5	8	5.5	M6x1	9	7	17	7	6	24	M5x0.8	M5x0.8	8	25.5	-
25	5 ÷ 50	12	-	40	22.5	11	5.5	M6x1	9	7	17	12	6	27.5	M6x1	M5x0.8	10	28	-
32	5	16	49.5	45	23	10.5	7.5	M6x1	9	7	17	13	6	30	M8x1.25	M5x0.8	14	34	14
32	10 ÷ 50	16	49.5	45	23	10.5	7.5	M6x1	9	7	17	13	7.5	30	M8x1.25	G1/8	14	34	14
32	75 ÷ 100	16	49.5	45	33	10.5	7.5	M6x1	9	7	17	13	7.5	40	M8x1.25	G1/8	14	34	14
40	5 ÷ 50	16	57	52	29.5	11	8	M6x1	9	7	17	13	7.5	36.5	M8x1.25	G1/8	14	40	15
40	75 ÷ 100	16	57	52	39.5	11	8	M6x1	9	7	17	13	7.5	46.5	M8x1.25	G1/8	14	40	15
50	10 ÷ 50	20	71	64	30.5	10.5	10.5	M8x1.25	11	8	22	15	8.5	38.5	M10x1.5	G1/4	17	50	19
50	75 ÷ 100	20	71	64	40.5	10.5	10.5	M8x1.25	11	8	22	15	8.5	48.5	M10x1.5	G1/4	17	50	19

Short-stroke magnetic cylinders Series QL

+ = add the stroke

Ø12/Ø16/Ø20/Ø25

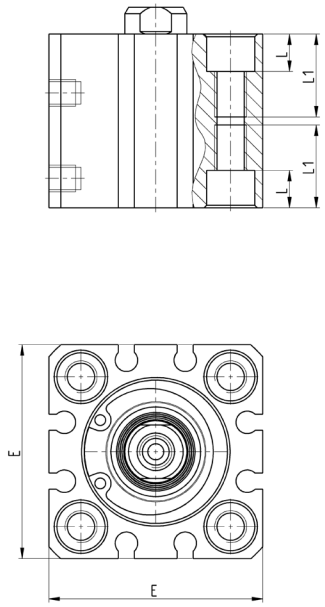

Ø32/Ø40/Ø50

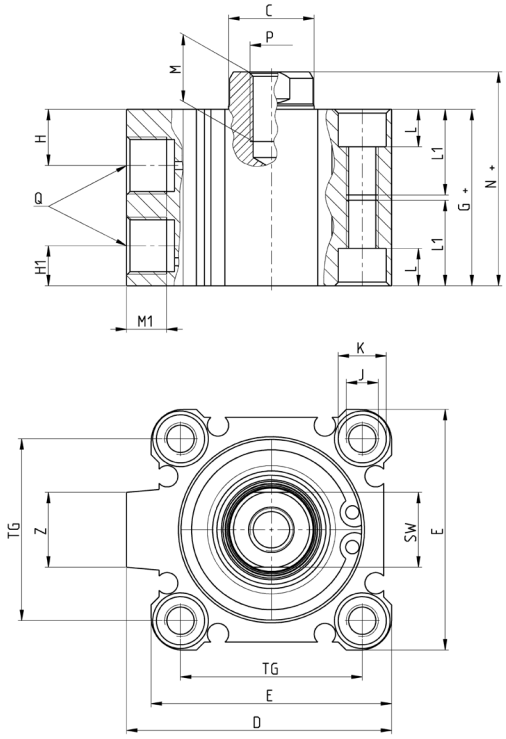

DIMENSIONS																			
Ø	Strokes range (mm)	øC	D	E	G	H	H1	J	øK	L	L1	M	M1	N	P	Q	SW	TG	Z
12	5 ÷ 30	6	-	25	28	7.5	5	M4x0.7	6.5	3.5	11	6	6	31.5	M3x0.5	M5x0.8	5	15.5	-
16	5 ÷ 30	8	-	29	30.5	9	5	M4x0.7	6.5	3.5	11	8	6	34	M4x0.7	M5x0.8	6	20	-
20	5 ÷ 50	10	-	35.5	31.5	8	5.5	M6x1	9	7	17	7	6	36	M5x0.8	M5x0.8	8	25.5	-
25	5 ÷ 50	12	-	40	32.5	11	5.5	M6x1	9	7	17	12	6	37.5	M6x1	M5x0.8	10	28	-
32	5 ÷ 100	16	49.5	45	33	10.5	7.5	M6x1	9	7	17	13	6 / 7.5	40	M8x1.25	G1/8	14	34	14
40	5 ÷ 100	16	57	52	39.5	11	8	M6x1	9	7	17	13	7.5	46.5	M8x1.25	G1/8	14	40	15
50	10 ÷ 100	20	71	64	40.5	10.5	10,.5	M8x1.25	11	8	22	15	8.5	48.5	M10x1.5	G1/4	17	50	19

Short-stroke through rod magnetic cylinders Series QL

+ = add the stroke
++ = add the stroke twice

Ø12/Ø16/Ø20/Ø25

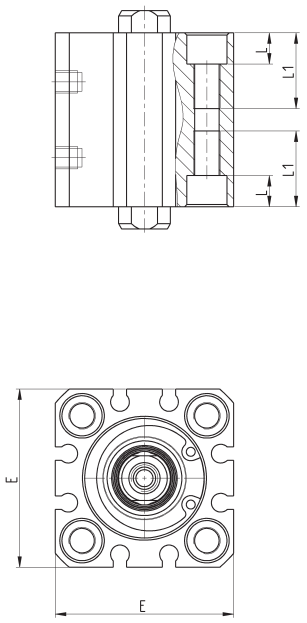

Ø32/Ø40/Ø50

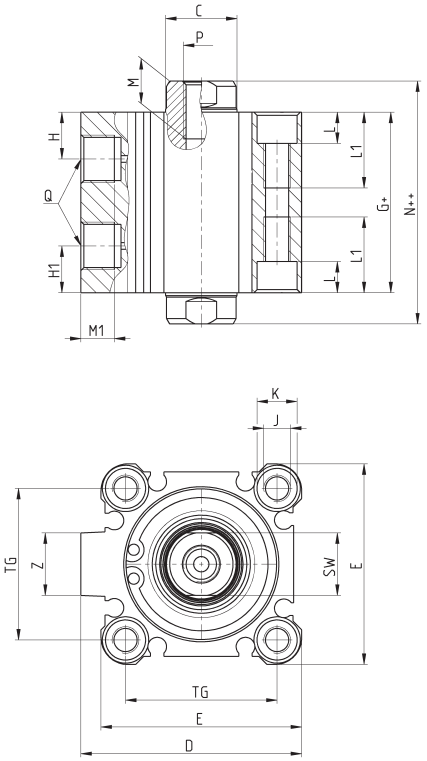

DIMENSIONS																			
Ø	Strokes range (mm)	øC	D	E	G	H	H1	J	øK	L	L1	M	M1	N	P	Q	SW	TG	Z
12	5 ÷ 30	6	-	25	32.4	7.5	7.5	M4x0.7	6.5	3.5	11	6	6	39,4	M3x0.5	M5x0.8	5	15,5	-
16	5 ÷ 30	8	-	29	36	9	5	M4x0.7	6.5	3.5	11	8	6	43	M4x0.7	M5x0.8	6	20	-
20	5 ÷ 50	10	-	35.5	38	8	8	M6x1	9	7	17	8	6	47	M5x0.8	M5x0.8	8	25,5	-
25	5 ÷ 50	12	-	40	39	11	11	M6x1	9	7	17	12	6	49	M6x1	M5x0.8	10	28	-
32	5 ÷ 100	16	49.5	45	40.5	10.5	10.5	M6x1	9	7	17	13	7.5	54.5	M8x1.25	G1/8	14	34	14
40	5 ÷ 100	16	57	52	50	11	11	M6x1	9	7	17	13	7.5	64	M8x1.25	G1/8	14	40	15
50	10 ÷ 100	20	71	64	50.5	10.5	10.5	M8x1.25	11	8	22	15	8.5	66.5	M10x1.5	G1/4	17	50	19

Short-stroke cylinders Series QL long strokes

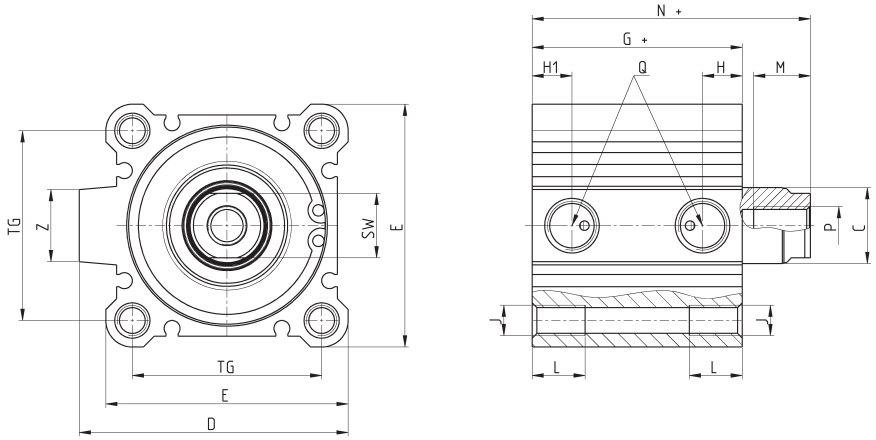

DIMENSIONS																
Ø	Stroke range (mm)	øC	D	E	G	H	H1	J	L	M	N	P	Q	SW	TG	Z
32	125 ÷ 300	16	49.5	45	45.5	10.5	10.5	M6x1.0	10	13	62.5	M8x1.25	G1/8	14	34	14
40	125 ÷ 300	16	57	52	55	11	11	M6x1.0	10	13	72	M8x1.25	G1/8	14	40	15
50	125 ÷ 300	20	71	64	55.5	10.5	10.5	M8x1.25	14	15	73.5	M10x1.5	G1/4	17	50	19

Short-stroke cylinders series QL male rod variant

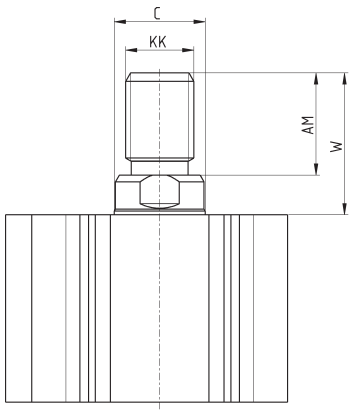

DIMENSIONS					
Ø	Stroke range (mm)	W	øC	KK	AM
12	5 ÷ 30	14	6	M5x0.8	10.5
16	5 ÷ 30	15.5	8	M6x1	12
20	5 ÷ 50	18.5	10	M8x1.25	14
25	5 ÷ 50	22.5	12	M10x1.25	17.5
32	5 ÷ 100	30.5	16	M14x1.5	23.5
32	125 ÷ 300	40.5	16	M14x1.5	23.5
40	5 ÷ 100	30.5	16	M14x1.5	23.5
40	125 ÷ 300	40.5	16	M14x1.5	23.5
50	10 ÷ 100	36.5	20	M18x1.5	28.5
50	125 ÷ 300	46.5	20	M18x1.5	28.5

Foot bracket Mod.B-QL

Material: zinc-plated steel.

Supplied with:
2x foot brackets
4x screws

+ = add the stroke

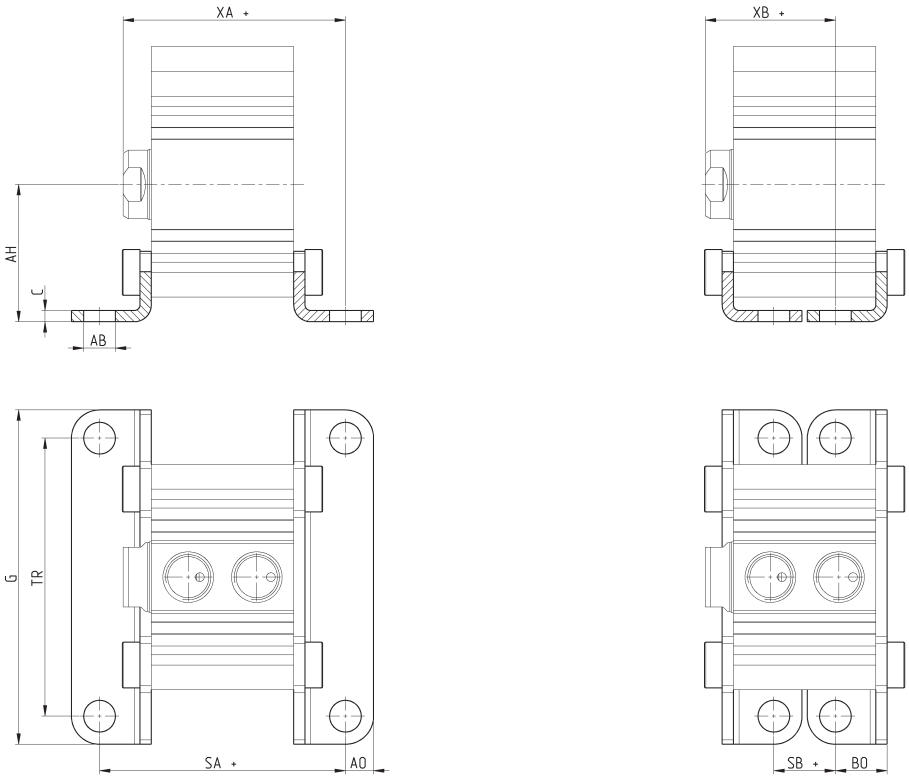

DIMENSIONS													
Ø	Version	Stroke range (mm)	AH	XA	XB	G	TR	C	SA	AO	SB	BO	AB
12	QLM	5 ÷ 30	17	39.5	25.5	44	34	2	44	4.5	16	8	4.5
12	QLN	5 ÷ 30	17	28.5	14.5	44	34	2	33	4.5	5	8	4.5
16	QLM	5 ÷ 30	19	42	28	48	38	2	46.5	5	18.5	8	4.5
16	QLN	5 ÷ 30	19	30	16	48	38	2	34.5	5	6.5	8	4.5
20	QLM	5 ÷ 50	24	45.2	30	62	48	3.2	49.9	5.8	19.5	9.2	6.5
20	QLN	5 ÷ 50	24	33.2	18	62	48	3.2	37.9	5.8	7.5	9.2	6.5
25	QLM	5 ÷ 50	26	48.2	30	66	48	3.2	53.9	5.8	17.5	10.7	6.5
25	QLN	5 ÷ 50	26	38.2	20	66	52	3.2	43.9	5.8	7.5	10.7	6.5
32	QLM	5 ÷ 100	30	51.2	32	71	52	3.2	55.4	5.8	17	11.2	6.5
32	QLN	5 ÷ 50	30	41.2	22	71	57	3.2	45.4	5.8	7	11.2	6.5
32	QLN	75 ÷ 100	30	51.2	32	71	57	3.2	55.4	5.8	17	11.2	6.5
40	QLM	5 ÷ 100	33	57.5	38.5	78	57	3.2	61.9	7	23.5	11.2	6.5
40	QLN	5 ÷ 50	33	47.7	28.5	78	64	3.2	51.9	7	13.5	11.2	6.5
40	QLN	75 ÷ 100	33	57.5	38.5	78	64	3.2	61.9	7	23.5	11.2	6.5
50	QLM	5 ÷ 100	39	53.2	37	95	79	3.2	69.9	8	17.5	14.7	9
50	QLN	5 ÷ 50	39	53.2	27	95	79	3.2	59.9	8	7.5	14.7	9
50	QLN	75 ÷ 100	39	53.2	37	95	79	3.2	69.9	8	17.5	14.7	9

Foot bracket Mod.BN-QL

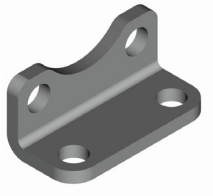

Material: zinc-plated steel.

Supplied with:
2x foot brackets
4x screws

+ = add the stroke

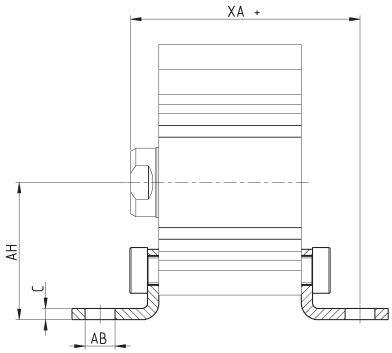

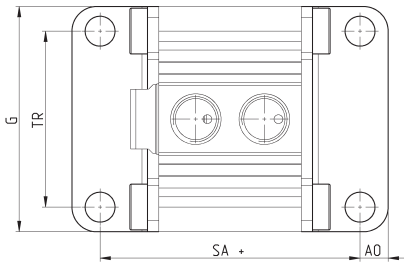

DIMENSIONS										
Ø	Version	Stroke range (mm)	AH	XA	G	TR	C	SA	AO	AB
12	QLM	5 ÷ 30	17	40.8	25	15.5	2	46.6	4.5	4.5
12	QLN	5 ÷ 30	17	29.8	25	15.5	2	35.6	4.5	4.5
16	QLM	5 ÷ 30	19	43.3	29	20	2	49.1	5	4.5
16	QLN	5 ÷ 30	19	31.3	29	20	2	37.1	5	4.5
20	QLM	5 ÷ 50	24	49.2	36	25.5	3.2	57.9	5.8	6.5
20	QLN	5 ÷ 50	24	37.2	36	25.5	3.2	45.9	5.8	6.5
25	QLM	5 ÷ 50	26	50.7	40	28	3.2	58.9	5.8	6.5
25	QLN	5 ÷ 50	26	40.7	40	28	3.2	48.9	5.8	6.5
32	QLM	5 ÷ 100	30	53.7	45	34	3.2	60.4	5.8	6.5
32	QLN	5 ÷ 50	30	43.7	45	34	3.2	50.4	5.8	6.5
32	QLN	75 ÷ 100	30	53.7	45	34	3.2	60.4	5.8	6.5
40	QLM	5 ÷ 100	33	60.2	52	40	3.2	66.9	7	6.5
40	QLN	5 ÷ 50	33	50.2	52	40	3.2	56.9	7	6.5
40	QLN	75 ÷ 100	33	60.2	52	40	3.2	66.9	7	6.5
50	QLM	5 ÷ 100	39	65.2	64	50	3.2	73.9	8	8.5
50	QLN	5 ÷ 50	39	55.2	64	50	3.2	63.9	8	8.5
50	QLN	75 ÷ 100	39	65.2	64	50	3.2	73.9	8	8.5

New

Series RPA short stroke cylinders with non-rotating rod

Double-effect, magnetic
With hollow through rod and mounting stud
Bores: 20 and 30 mm

- Clean and robust design
- Light
- Fixing from the body or with mounting stud
- Hard anodized aluminium rod
- Hollow through rod
- Non-rotating rod
- Slots on both sides for the positioning of magnetic proximity switches
- Large range of standard strokes and mounting stud dimensions

The Series RPA short stroke cylinders are double acting actuators with aluminium hollow through rod and mounting stud. Available in two sizes, ø 20 and ø 30 mm, with different strokes and dimensions of the mounting stud, these actuators are equipped with the non-rotating function of the rod.

The Series RPA are prepared for the mounting of magnetic sensors (Series CSD), in fact, on the external profile, along the cylinder tube, you can find sensor positioning slots. Their compact and light design together with the adopted technical solutions make these cylinders suitable to be used, combined with suction pads, in End Of Arm Tooling (EOAT) systems, especially in the sector of plastic injection moulding.

GENERAL DATA

Type of construction	Short stroke
Operation	Double acting, hollow through rod
Materials	Anodized aluminium body, piston and rod HNBR seals
Operating pressure	2 ÷ 8 bar
Operating temperature	5°C ÷ 60°C
Medium	Filtered air in class 7.4.4 according to ISO 8573-1
Lubrication	Not necessary. A pre-lubrication is performed on the cylinder. In case lubricated air is used, we recommend ISOVG32 oil and to never interrupt lubrication.
Mounting	Stud / threaded holes on the body
Use with external sensors	Slots on both sides for Series CSD sensors
Anti-rotation function	With self-lubricating technopolymer anti-friction pads

Technical specifications

Models	RPA20R010A14	RPA20R010A20	RPA20R025A14	RPA30R015A20	RPA30R030A20	RPA30R050A20
Bore	ø 20 mm	ø 20 mm	ø 20 mm	ø 30 mm	ø 30 mm	ø 30 mm
Force (6 bar)	130 N	130 N	130 N	300 N	300 N	300 N
Stroke	10 mm	10 mm	25 mm	15 mm	30 mm	50 mm
Air consumption	5 cm^3	5 cm^3	12 cm^3	16 cm^3	30 cm^3	46 cm^3
Actuation time	20 ms	20 ms	50 ms	60 ms	150 ms	250 ms
Stud	ø 14 mm	ø 20 mm	ø 14 mm	ø 20 mm	ø 20 mm	ø 20 mm
Weight	50 g	65 g	75 g	110 g	145 g	195 g

CODING EXAMPLE

RPA	20	R	010	A	20

RPA	SERIES
20	BORE: 020 = 20 mm 030 = 30 mm
R	VERSION: R = non-rotating
010	STROKE: 010 = 10 mm 015 = 15 mm 025 = 25 mm 030 = 30 mm 050 = 50 mm
A	CONSTRUCTION: A = standard
20	STUD: 14 = 14 mm 20 = 20 mm

Series RPA short-stroke cylinders

+ = add the stroke
++ = add the stroke twice

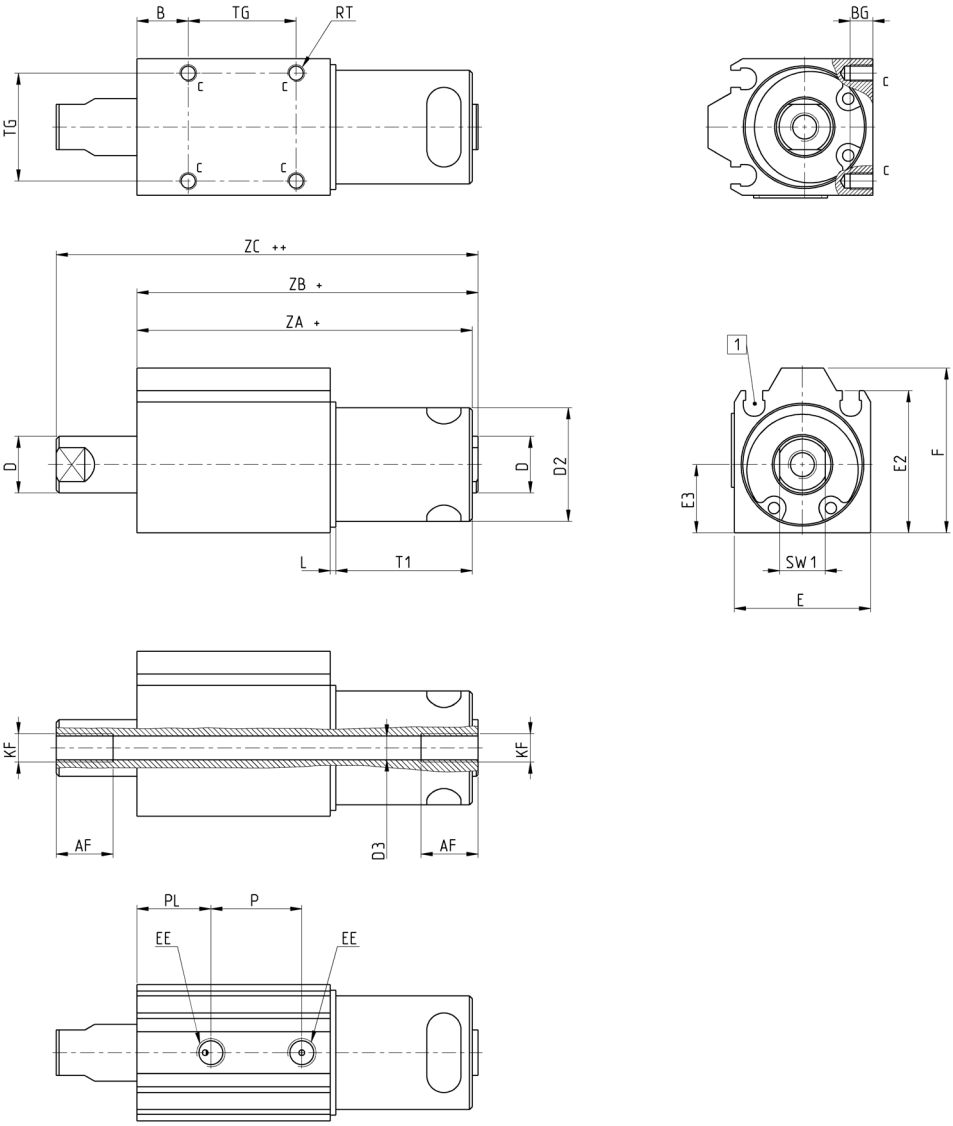

Mod.	Bore	Stroke	AF	B	BG	D	D2	D3	E	E2	E3	EE	F	KF	L	P	PL	RT	SW1	T1	TG	ZA	ZB	ZC
RPA20R010A20	20	10	10	9	4	Ø10	Ø20	Ø4.2	24	25	12	M5	29	M5	1	16	13	M3	8	24	19	59	60	74.2
RPA20R010A14	20	10	10	9	4	Ø10	Ø14	Ø4.2	24	25	12	M5	29	M5	1	16	13	M3	8	24	19	59	60	74.2
RPA20R025A14	20	25	10	24	4	Ø10	Ø14	Ø4.2	24	25	12	M5	29	M5	1	31	13	M3	8	39	19	89	90	119.2
RPA30R015A20	30	15	10	7	6	Ø15	Ø20	Ø8.8	34	35	17	M5	39	G1/8	3	23.3	10.1	M4	13	25	28	67	68	87.2
RPA30R030A20	30	30	10	7	6	Ø15	Ø20	Ø8.8	34	35	17	M5	39	G1/8	3	38.3	10.1	M4	13	38	28	95	96	130.2
RPA30R050A20	30	50	10	27	6	Ø15	Ø20	Ø8.8	34	35	17	M5	39	G1/8	3	58.3	10.1	M4	13	58	28	135	136	190.2

Mounting examples

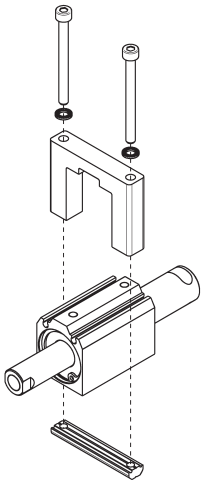

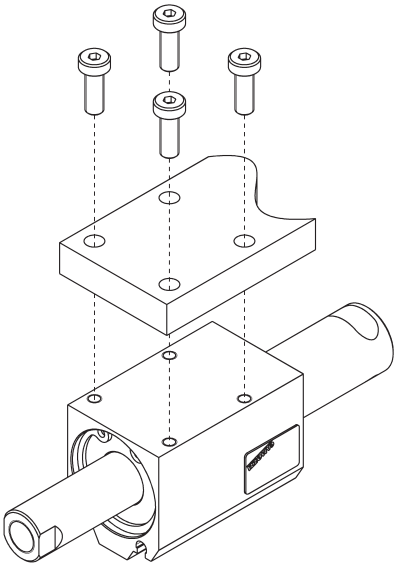

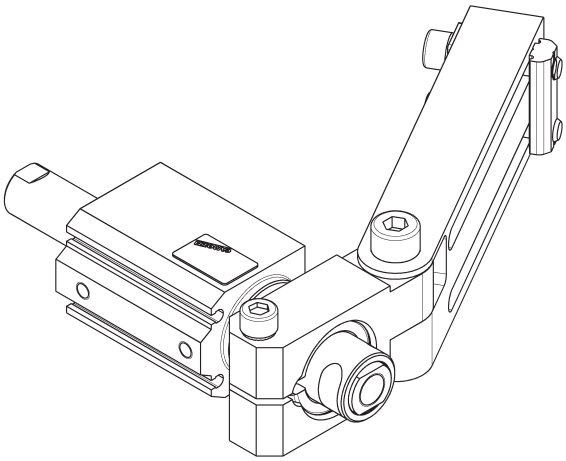

Series 31 compact cylinders

Double and single-acting, double-acting non-rotating, magnetic
ø12, 16, 20, 25 mm
ø 32, 40, 50, 63, 80, 100 mm UNITOP

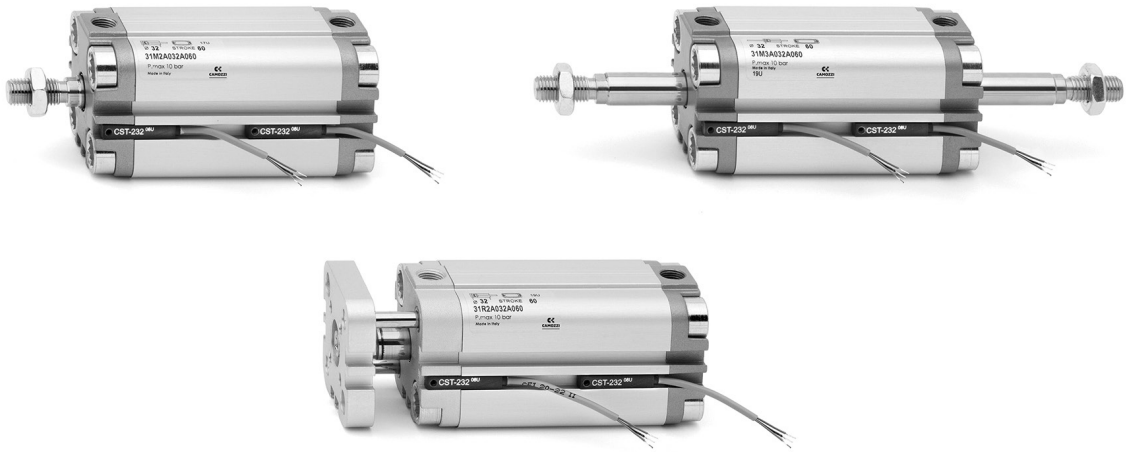

The compact dimensions allow Series 31 single and double-acting magnetic cylinders to be installed within confined spaces. These cylinders are suitable for use with feet, brackets.

These cylinders are available in 10 different bore sizes from ø 12 to ø 100. The guides are inserted in the external profile parallel to the sliding axis on three sides. These guides are used to locate the switches that sense the piston position. The construction design of these cylinders provides excellent axis stability. They are available either with a male or female thread.
These cylinders can be supplied in W version for high temperatures (140°C). This last version is not magnetic.

- » Compact design
- » Wide range of models available
- » Standard magnetic
- » High temperature (double-acting and non magnetic)

GENERAL DATA

Type of construction	compact profile
Operation	single and double-acting
Materials	AL body and end-blocks - rolled stainless steel AISI 303 rod - AL piston rod PU seals or FKM seals for high temperatures (140°C)
Brackets	flange, feet, trunnion
Stroke min - max	Series 31R, 31M and 31F: ø12÷25 = 1÷200mm, ø32 ÷ 63 = 1÷300 mm, ø80÷100 = 1÷400mm The min. stroke for the use of sensors is 10 mm. Single-acting = 5÷25 mm (see the table of standard strokes)
Operating temperature	0°C ÷ 80°C (with dry air - 20°C)
Operating pressure	1 ÷ 10 bar (double-acting); 2 ÷ 10 bar (single-acting)
Fluid	filtered air, without lubrication. If lubricated air is used, it is recommended to use oil ISOVG32. Once applied the lubrication should never be interrupted.
Speed	10 ÷ 1000 mm/sec (without load)

STANDARD STROKES

■ = Double-acting female, male ✖ = Non-rotating ● = Single-acting female, male

STANDARD STROKES										
Ø	5	10	15	20	25	30	40	50	60	80
12	■ ✖ ●	■ ✖ ●	■ ✖	■ ✖	■ ✖	■ ✖	■ ✖			
16	■ ✖ ●	■ ✖ ●	■ ✖ ●	■ ✖ ●	■ ✖ ●	■ ✖	■ ✖			
20	■ ✖ ●	■ ✖ ●	■ ✖ ●	■ ✖ ●	■ ✖ ●	■ ✖	■ ✖	■ ✖		
25	■ ✖ ●	■ ✖ ●	■ ✖ ●	■ ✖ ●	■ ✖ ●	■ ✖	■ ✖	■ ✖		
32	■ ✖ ●	■ ✖ ●	■ ✖ ●	■ ✖ ●	■ ✖ ●	■ ✖	■ ✖	■ ✖		
40	■ ✖ ●	■ ✖ ●	■ ✖ ●	■ ✖ ●	■ ✖ ●	■ ✖	■ ✖	■ ✖	■ ✖	■ ✖
50		■ ✖ ●	■ ✖ ●	■ ✖ ●	■ ✖ ●	■ ✖	■ ✖	■ ✖	■ ✖	■ ✖
63		■ ✖ ●	■ ✖ ●	■ ✖ ●	■ ✖ ●	■ ✖	■ ✖	■ ✖	■ ✖	■ ✖
80		■ ✖ ●	■ ✖ ●	■ ✖ ●	■ ✖ ●	■ ✖	■ ✖	■ ✖	■ ✖	■ ✖
100		■ ✖ ●	■ ✖ ●	■ ✖ ●	■ ✖ ●	■ ✖	■ ✖	■ ✖	■ ✖	■ ✖

CODING EXAMPLE

31	M	2	A	032	A	050	

31	SERIES 31 = compact magnetic	
M	VERSION M = male rod thread, mounted with rod nut Mod. U F = female rod thread R = non-rotating with flange only double-acting	
2	OPERATION 1 = single-acting, front spring 2 = double-acting 3 = double-acting, through-rod 4 = single-acting, rear spring 7 = single-acting, through-rod	PNEUMATIC SYMBOLS CS06 CD08 CD12 CS08 CS10
A	MATERIALS A = rolled stainless steel AISI 303 rod - AL tube profile	
032	BORE 012 = 12 mm 016 = 16 mm 020 = 20 mm 025 = 25 mm 032 = 32 mm 040 = 40 mm 050 = 50 mm 063 = 63 mm 080 = 80 mm 100 = 100 mm	
A	DESIGN TYPE A = standard	
050	STROKE (see the table)	
	= standard V = rod seal FKM W = seals in FKM for high temperatures (140°C), only available in the double-acting, non magnetic version	

PNEUMATIC SYMBOLS

The pneumatic symbols which have been indicated in the CODING EXAMPLE are shown below.

ACCESSORIES FOR COMPACT MAGNETIC CYLINDERS SERIES 31

Swivel ball joint Mod. GA (cyl. Mod. 31M)

90° swivel combination for trunnion Mod. I

Rear trunnion Mod. C

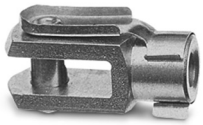

Rod fork end Mod. G (cyl. Mod. 31M)

Piston rod lock nut Mod. U (cyl. Mod. 31M)

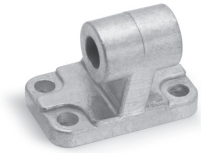

90° swivel combin. for fem. trunnion Mod. ZC

Rear trunnion Mod. L

Rear and front flange Mod. D

Foot mount Mod. B

Coupling piece Mod. GKF

Self aligning rod Mod. GK

Piston rod socket joint Mod. GY (cyl. Mod. 31M)

All accessories are supplied separately.

ANTI-ROTATION - Transversal load dependant on projection

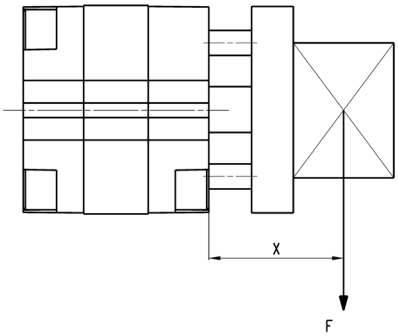

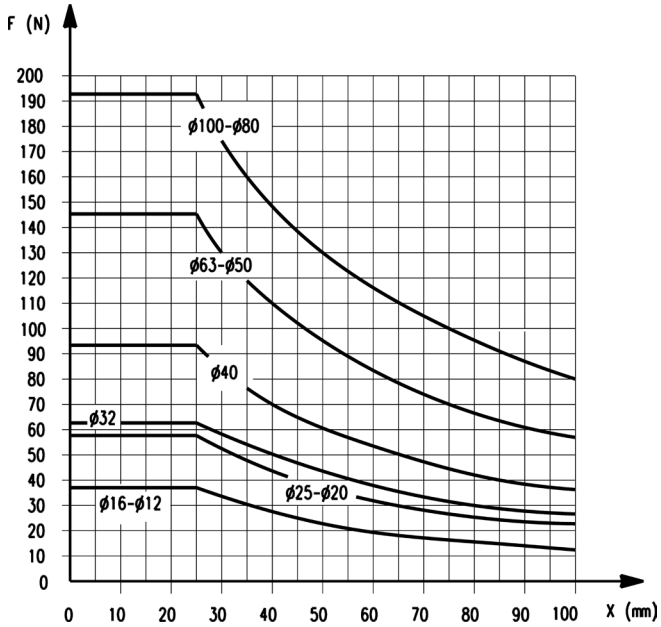

It is possible to determine the strokes required as shown in the general data in the absence of radial loads and torque moments.
When imposing radial loads on the cylinder it is important to respect the maximum projection of the baricenter.
In the presence of torque moments, it is recommended to respect the maximum stroke as shown in the diagrams.

ANTI-ROTATION THROUGH-ROD - Transversal load dependant on projection

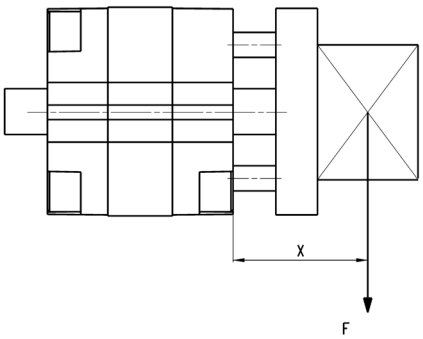

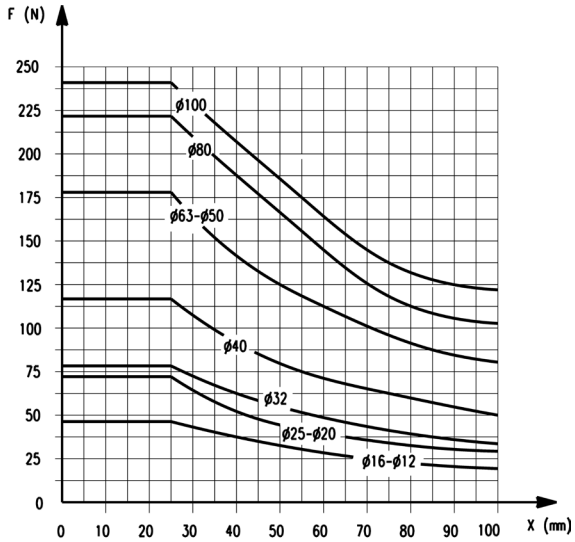

It is possible to determine the strokes required as shown in the general data in the absence of radial loads and torque moments.
When imposing radial loads on the cylinder it is important to respect the maximum projection of the baricenter.
In the presence of torque moments, it is recommended to respect the maximum stroke as shown in the diagrams.

TORQUE MOMENT - dependant on stroke C

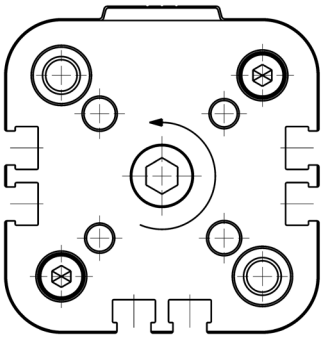

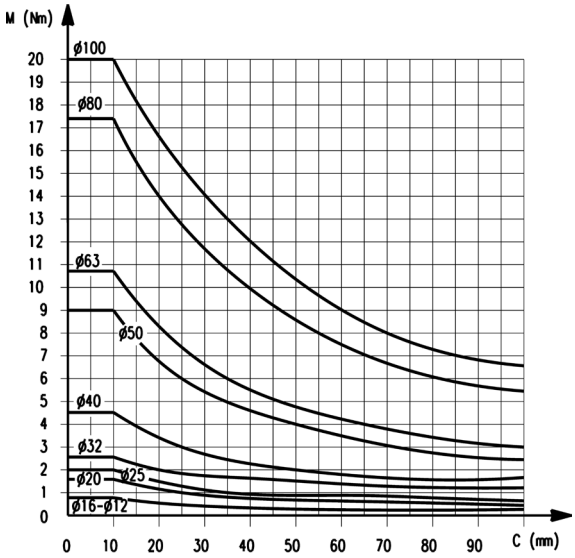

It is possible to determine the strokes required as shown in the general data in the absence of radial loads and torque moments.
When imposing radial loads on the cylinder it is important to respect the maximum projection of the baricenter.
In the presence of torque moments, it is recommended to respect the maximum stroke as shown in the diagrams.

TRANSVERSAL LOAD - dependant on projection

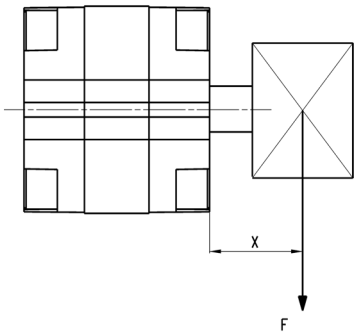

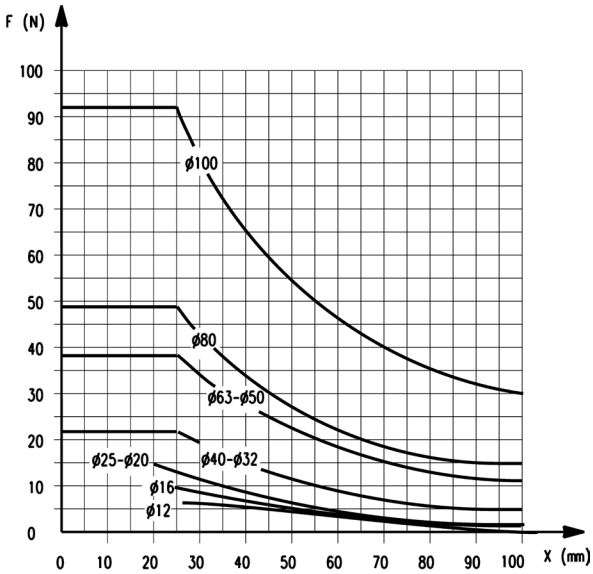

It is possible to determine the strokes required as shown in the general data in the absence of radial loads and torque moments.
When imposing radial loads on the cylinder it is important to respect the maximum projection of the baricenter.
In the presence of torque moments, it is recommended to respect the maximum stroke as shown in the diagrams.

TRANSVERSAL LOAD THROUGH-ROD - dependant on projection

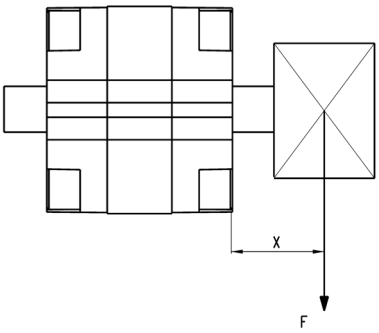

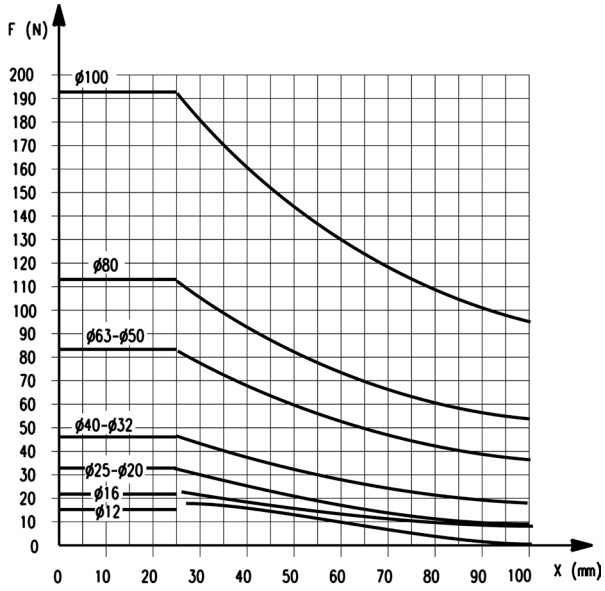

It is possible to determine the strokes required as shown in the general data in the absence of radial loads and torque moments.
When imposing radial loads on the cylinder it is important to respect the maximum projection of the baricenter.
In the presence of torque moments, it is recommended to respect the maximum stroke as shown in the diagrams.

Compact magnetic cylinders Mod. 31F and 31M

1 = Groove for sensor CST
2 = Keep to the minimum screwing depth.
+ = add the stroke

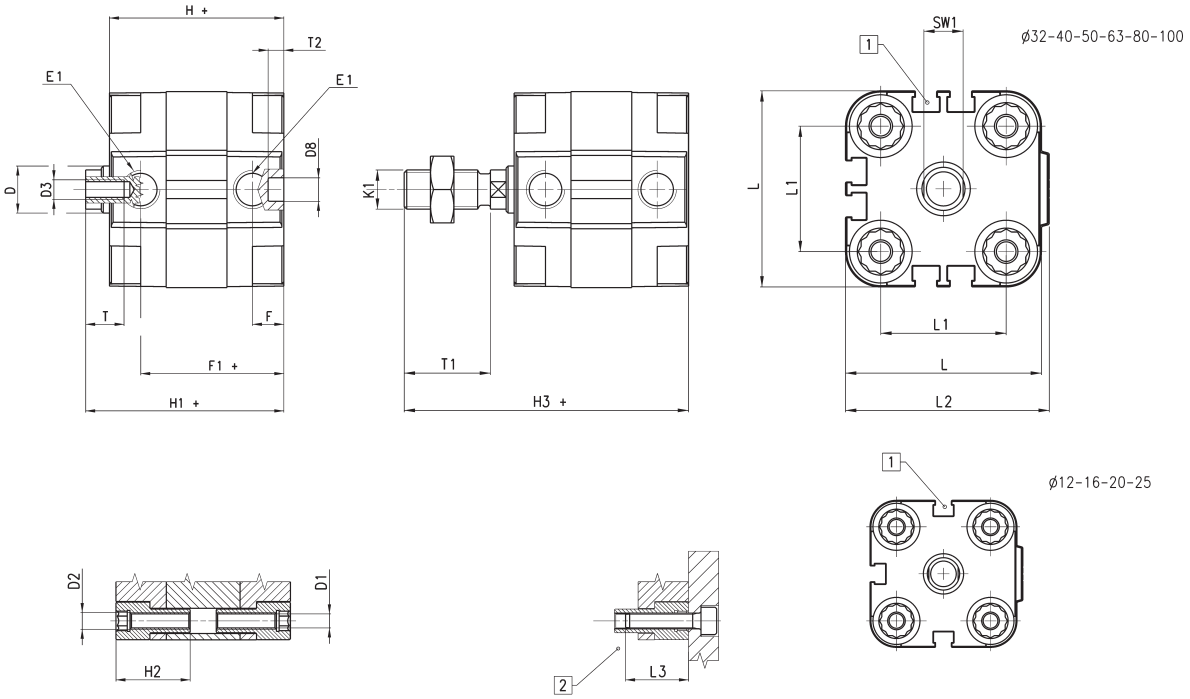

DIMENSIONS																					
Ø	øD	øD1	D2	D3	øD8 (H9)	E1	F	F1+	H+	H1+	H2	H3+	K1	L	L1	L2	L3	T	T1	T2	SW1
12	6	3,5	M4	M3	6	M5	8	30	38	42,5	18,5	58,5	M6	29	18	30	16	6	16	4	5
16	8	3,5	M4	M4	6	M5	8	30	38	42,5	18,5	62,5	M8	29	18	30	16	8	20	4	7
20	10	4,5	M5	M5	6	M5	8	30	38	42,5	18,5	64,5	M10x1,25	36	22	37,5	18	10	22	4	8
25	10	4,5	M5	M5	6	M5	8	31,5	39,5	45	18,5	67	M10x1,25	40	26	41,5	18	10	22	4	8
32	12	5,5	M6	M6	6	G1\8	8	36,5	44,5	50,5	21,5	72,5	M10x1,25	50	32	52	20	12	22	4	10
40	12	5,5	M6	M6	6	G1\8	8	37,5	45,5	52	21,5	74	M10x1,25	60	42	62,5	20	12	22	4	10
50	16	6,5	M8	M8	6	G1\8	8	37,5	45,5	53	22,5	77	M12x1,25	68	50	71	20	12	24	4	13
63	16	8,5	M10	M8	8	G1\8	8	42	50	57,5	24,5	81,5	M12x1,25	87	62	91	25	12	24	4	13
80	20	8,5	M10	M10	8	G1\8	8,5	47,5	56	64	24,5	96	M16x1,5	107	82	111	25	16	32	4	17
100	25	8,5	M10	M12	8	G1\4	10,5	56	66,5	76,5	31,5	116,5	M20x1,5	128	103	133	25	20	40	4	22

Compact magnetic cylinders Mod. 31F and 31M - through-rod

1 = Groove for sensor CST
2 = Keep to the minimum screwing depth.
+ = add the stroke once
++ = add the stroke twice

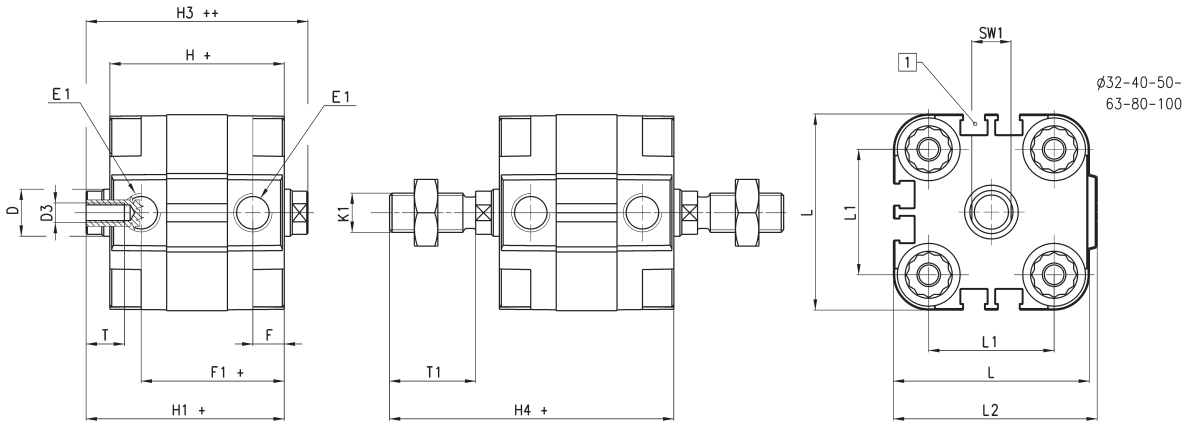

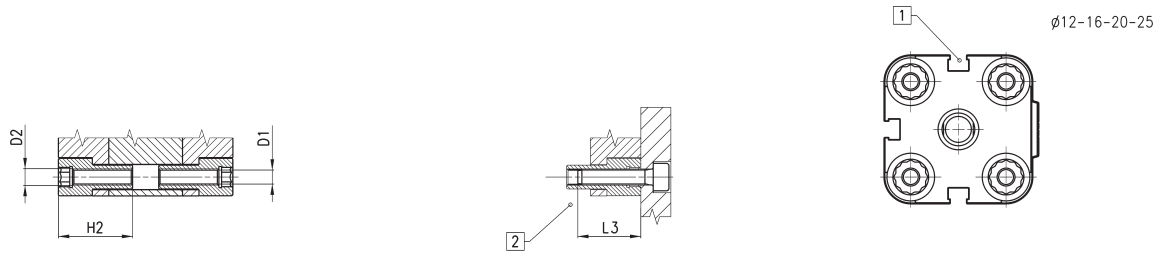

DIMENSIONS																				
Ø	øD	øD1	D2	D3	E1	F	F1+	H+	H1+	H2	H3++	H4+	K1	L	L1	L2	L3	T	T1	SW1
12	6	3,5	M4	M3	M5	8	30	38	42,5	18,5	47	58,5	M6	29	18	30	16	6	16	5
16	8	3,5	M4	M4	M5	8	30	38	42,5	18,5	47	62,5	M8	29	18	30	16	8	20	7
20	10	4,5	M5	M5	M5	8	30	38	42,5	18,5	47	64,5	M10x1,25	36	22	37,5	18	10	22	8
25	10	4,5	M5	M5	M5	8	31,5	39,5	45	18,5	50,5	67	M10x1,25	40	26	41,5	18	10	22	8
32	12	5,5	M6	M6	G1\8	8	36,5	44,5	50,5	21,5	56,5	72,5	M10x1,25	50	32	52	20	12	22	10
40	12	5,5	M6	M6	G1\8	8	37,5	45,5	52	21,5	58,5	74	M10x1,25	60	42	62,5	20	12	22	10
50	16	6,5	M8	M8	G1\8	8	37,5	45,5	53	22,5	60,5	77	M12x1,25	68	50	71	20	12	24	13
63	16	8,5	M10	M8	G1\8	8	42	50	57,5	24,5	65	81,5	M12x1,25	87	62	91	25	12	24	13
80	20	8,5	M10	M10	G1\8	8,5	47,5	56	64	24,5	72	96	M16x1,5	107	82	111	25	16	32	17
100	25	8,5	M10	M12	G1\4	10,5	56	66,5	76,5	31,5	86,5	116,5	M20x1,5	128	103	133	25	20	40	22

Compact magnetic cylinders Mod. 31R

1 = Groove for sensor CST
2 = Keep to the minimum screwing depth.
+ = add the stroke once
++ = add the stroke twice

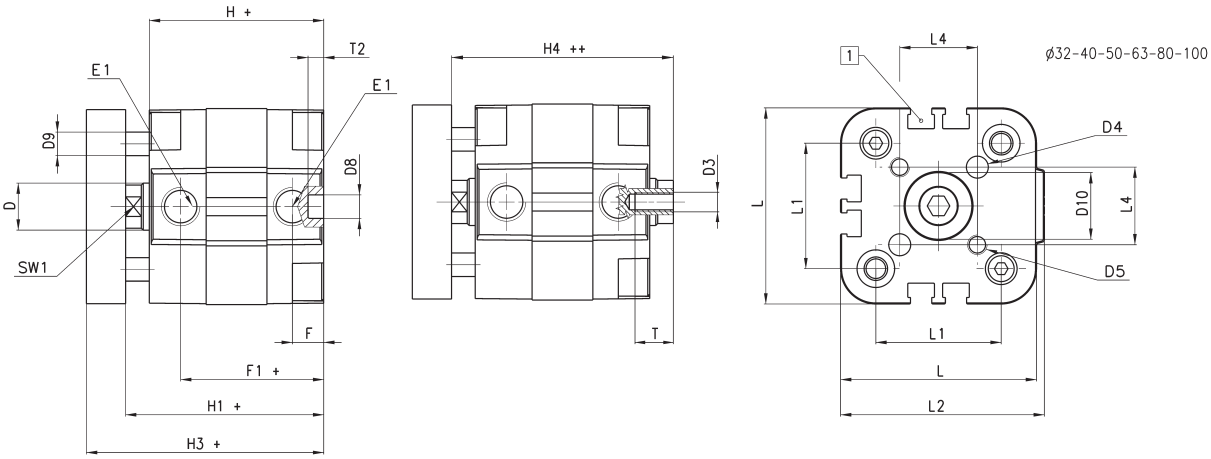

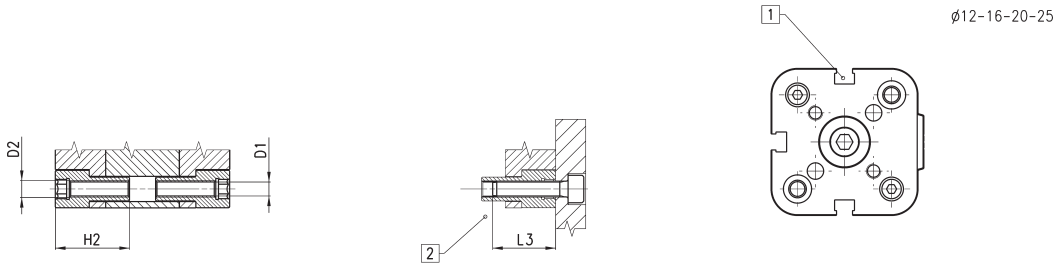

DIMENSIONS																									
Ø	øD	øD1	D2	D3	øD4(H9)	D5	D8(H9)	øD9	D10	E1	F	F1+	H+	H1+	H2	H3+	H4++	L	L1	L2	L3	L4	T	T2	SW1
12	6	3,5	M4	M3	3	M3	6	5	6	M5	8	30	38	42,5	18,5	48,5	47	29	18	30	16	9,9	6	4	5
16	8	3,5	M4	M4	3	M3	6	5	8	M5	8	30	38	42,5	18,5	48,5	47	29	18	30	16	9,9	8	4	7
20	10	4,5	M5	M5	4	M4	6	6	10	M5	8	30	38	42,5	18,5	50,5	47	36	22	37,5	18	12	10	4	8
25	10	4,5	M5	M5	5	M5	6	6	14	M5	8	31,5	39,5	45	18,5	53	50,5	40	26	41,5	18	15,6	10	4	8
32	12	5,5	M6	M6	5	M5	6	6	17	G1\8	8	36,5	44,5	50,5	21,5	60,5	56,5	50	32	52	20	19,8	12	4	10
40	12	5,5	M6	M6	5	M5	6	6	17	G1\8	8	37,5	45,5	52	21,5	62	58,5	60	42	62,5	20	23,3	12	4	10
50	16	6,5	M8	M8	6	M6	6	10	22	G1\8	8	37,5	45,5	53	22,5	65	60,5	68	50	71	20	29,7	12	4	13
63	16	8,5	M10	M8	6	M6	8	10	22	G1\8	8	42	50	57,5	24,5	69,5	65	87	62	91	25	35,4	12	4	13
80	20	8,5	M10	M10	8	M8	8	12	28	G1\8	8,5	47,5	56	64	24,5	78	72	107	82	111	25	46	16	4	17
100	25	8,5	M10	M12	10	M10	8	12	30	G1\4	10,5	56	66,5	76,5	31,5	90,5	86,5	128	103	133	25	56,6	20	4	22

Foot mount Mod. B

Material: zinc-plated steel

Supplied with:
2x feet
4x screws

+ = add the stroke

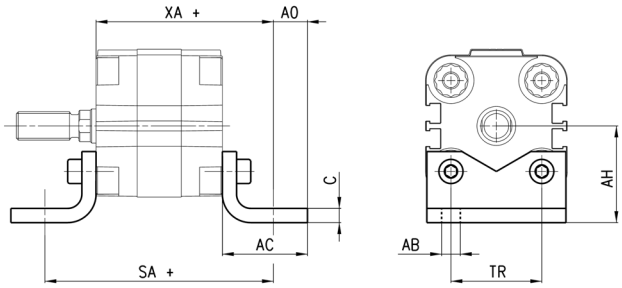

DIMENSIONS									
Mod.	Ø	C	SA+	XA+	TR	øAB	AH	AO	AC
B-31-12-16	12 - 16	3	64	51	18	5,5	22	7	20
B-32-20	20	4	70	54	22	6,6	27	9	25
B-31-25	25	4	71,5	55,5	26	6,6	29	9	25
B-31-32	32	5	80,5	62,5	32	6,6	34	12	30
B-31-40	40	5	85,5	65,5	42	9	40,5	10	30
B-31-50	50	5,5	93,5	69,5	50	9	47	11	35
B-31-63	63	5,5	104	77	62	11	56,5	13	40
B-31-80	80	7,5	116	86	82	11	68,5	15	45
B-31-100	100	7,5	132,5	99,5	103	13,5	81	12	45

Rear and front flange Mod. D-E

Material: zinc-plated steel

Supplied with:
1x flange
4x screws

+ = add the stroke

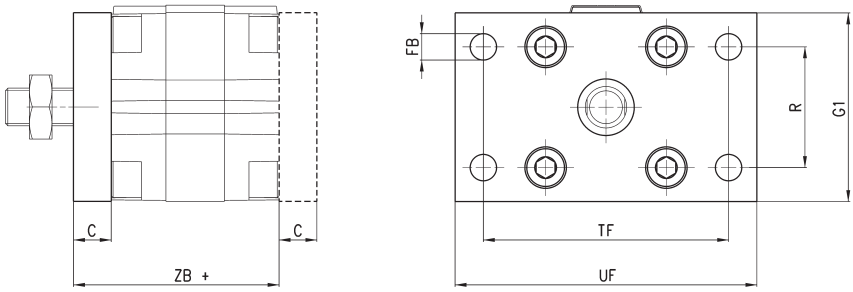

DIMENSIONS								
Mod.	Ø	C	ZB+	TF	R	UF	G1	øFB
D-E-31-12-16	12 - 16	10	48	43	-	55	29	5,5
D-E-32-20	20	10	48	55	-	70	36	6,6
D-E-32-25	25	10	49,5	60	-	76	40	6,6
D-E-31-32	32	10	54,5	65	32	80	50	7
D-E-31-40	40	10	55,5	82	36	102	60	9
D-E-31-50	50	12	57,5	90	45	110	68	9
D-E-31-63	63	15	65	110	50	130	87	9
D-E-31-80	80	15	71	135	63	160	107	12
D-E-31-100	100	15	81,5	163	75	190	128	14

Female rear trunnion Mod. C

Material: Aluminium

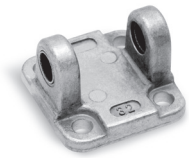

Supplied with:
4x screws
1x clevis pin
1x centering pin
1x trunnion
+ = add the stroke

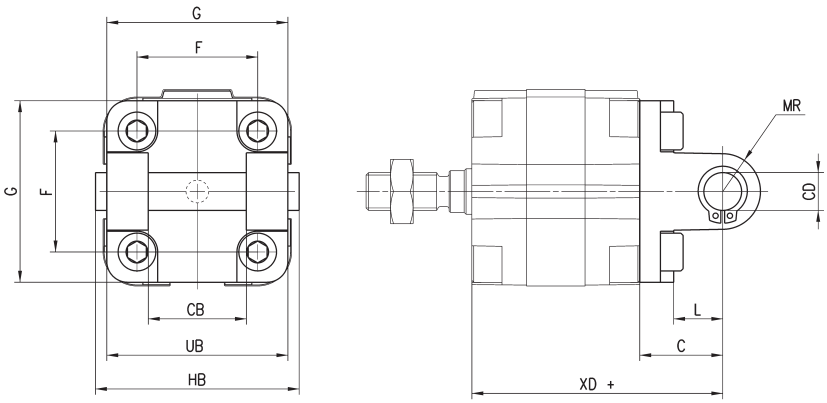

DIMENSIONS											
Mod.	Ø	øCD	L	C	XD+	MR	F	G	CB	UB	HB
C-31-32	32	10	13	21	66,5	11	32	50	26	45	54
C-31-40	40	12	16	25	70,5	13	42	60	28	52	62
C-31-50	50	12	16	27	72,5	13	50	68	32	60	70
C-31-63	63	16	21	32	82	17	62	87	40	70	82
C-31-80	80	16	23	36	92	17	82	102	50	90	102
C-31-100	100	20	26	41	107,5	21	103	128	60	110	126

Intermediate bracket Mod. DC

Flange in aluminium

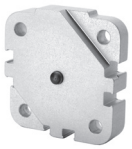

Supplied with:
1x flange
1x centering pin
4x screws

+ = add the stroke

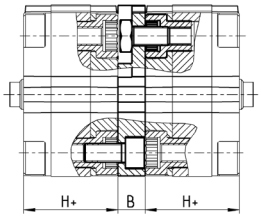

DIMENSIONS				
Mod.	Ø	B	H+	Max stroke (mm)
DC-31-12-16	12-16	12,5	38	400
DC-31-20	20	12,5	38	400
DC-31-25	25	13	39,5	400
DC-31-32	32	14,5	44,5	600
DC-31-40	40	14,5	45,5	600
DC-31-50	50	14,5	45,5	600
DC-31-63	63	14,5	50	600
DC-31-80	80	16,5	56	800
DC-31-100	100	19,5	66,5	800

90° Swivel combination for female trunnion Mod. ZC

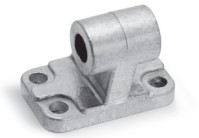

Male rear
Material: aluminium

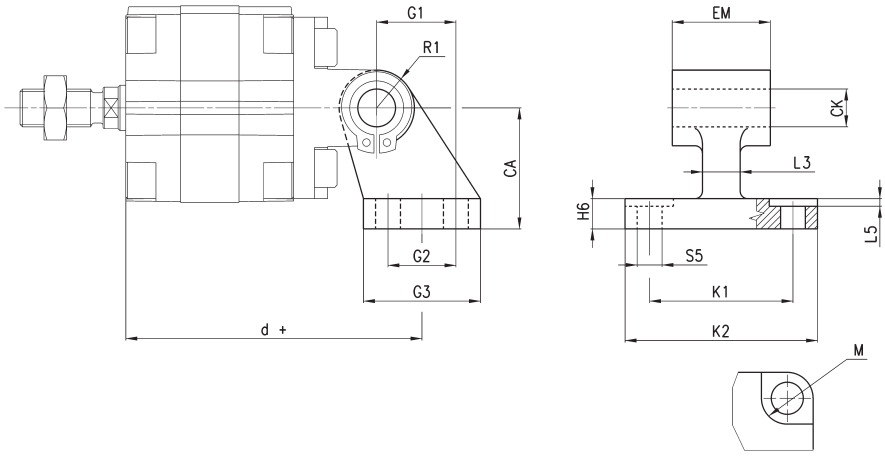

Supplied with:
1x male support

+ = add the stroke

DIMENSIONS																
Mod.	Ø	M	øCK	øS5	d+	K1	K2	L3	G1	L5	G2	EM	G3	CA	H6	R1
ZC-32	32	11	10	6,6	78,5	38	51	10	21	1,6	18	26	31	32	8	10
ZC-40	40	11	12	6,6	83,5	41	54	15	24	1,6	22	28	35	36	10	11
ZC-50	50	15	12	9	90,5	50	65	16	33	1,6	30	32	45	45	12	13
ZC-63	63	15	16	9	101,5	52	67	16	37	1,6	35	40	50	50	14	15
ZC-80	80	18	16	11	119	66	86	20	47	2,5	40	50	60	63	14	15
ZC-100	100	18	20	11	137,5	76	96	20	55	3,2	50	60	70	71	17	19

90° swivel combination for trunnion Mod. I

Material: zinc-plated steel

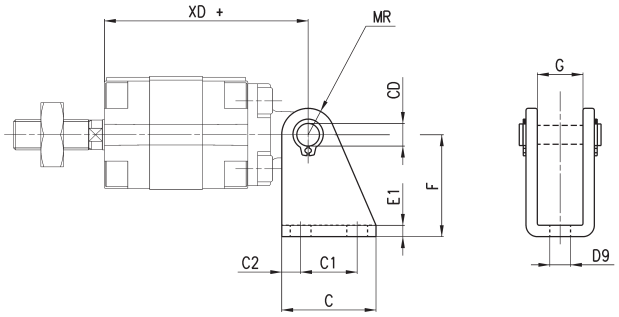

Supplied with:
2x Seeger
1x female support
1x piston pin

+ = add the stroke

DIMENSIONS											
Mod.	Ø	øCD	C	C1	øC2	XD+	MR	øD9	E1	F	G
I-12-16	12	6	25	15	5	54	7	5,5	3	27	12,1
I-12-16	16	6	25	15	5	54	7	5,5	3	27	12,1
I-20-25	20	8	32	20	6	58	10	6	4	30	16,1
I-20-25	25	8	32	20	6	59,5	10	6	4	30	16,1

Rear male trunnion Mod. L

Material: aluminium
Supplied with:
4x screws
1x male trunnion
1x centering pin

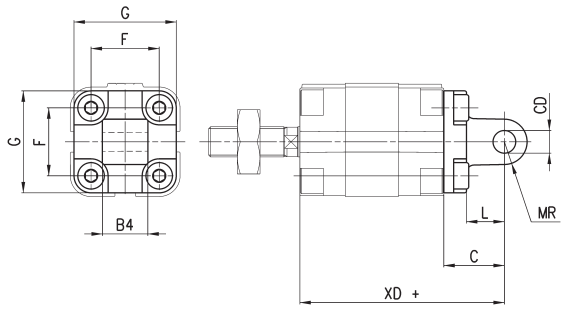

DIMENSIONS									
	Ø	øCD	L	C	XD+	MR	F	G	B4
L-31-12-16	12	6	10	16	54	6	18	30	12
L-31-12-16	16	6	10	16	54	6	18	30	12
L-31-20	20	8	14	20	58	8	22	37,5	16
L-31-25	25	8	14	20	59,5	8	26	41,5	16

+ = add the stroke

Piston rod lock nut Mod. U

Material: zinc-plated steel
ISO 4035

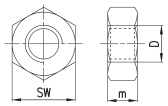

DIMENSIONS				
Mod.	Ø cylinder	D	m	SW
U-12-16	12	M6X1	4	10
U-20	16	M8X1,25	5	13
U-25-32	20-40	M10X1,25	6	17
U-40	50-63	M12X1,25	7	19
U-50-63	80	M16X1,5	8	24
U-80-100	100	M20X1,5	9	30

Swivel ball joint Mod. GA

Material: zinc-plated steel
ISO 8139

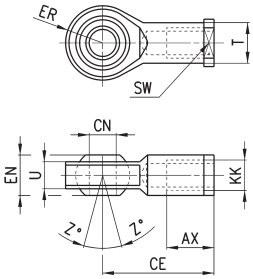

DIMENSIONS											
Mod.	Ø	øCN	U	EN	ER	AX	CE	KK	T	Z	SW
GA-12-16	12	6	7	9	10	12	30	M6X1	10	6,5	11
GA-20	16	8	9	12	12	16	36	M8X1,25	12,5	6,5	14
GA-32	20÷40	10	10,5	14	14	20	43	M10X1,25	15	6,5	17
GA-40	50÷63	12	12	16	16	22	50	M12X1,25	17,5	6,5	19
GA-50-63	80	16	15	21	21	28	64	M16X1,5	22	7,5	22
GA-80-100	100	20	18	25	25	33	77	M20X1,5	27,5	7	30

Rod fork end Mod. G

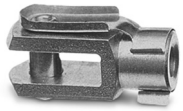

ISO 8140
Material: zinc-plated steel

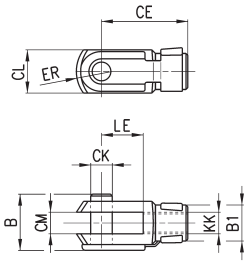

DIMENSIONS										
Mod.	Ø	B	øB1	øCK	LE	CM	CL	ER	CE	KK
G-12-16	12	16	10	6	12	6	12	7	24	M6X1
G-20	16	22	14	8	16	8	16	42	32	M8X1,25
G-25-32	20 ÷ 40	26	18	10	20	10	20	12	40	M10X1,25
G-40	50 ÷ 63	32	20	12	24	12	24	14	48	M12X1,25
G-50-63	80	40	26	16	32	16	32	19	64	M16X1,5
G-80-100	100	48	34	20	40	20	40	25	80	M20X1,5

Piston rod socket joint Mod. GY

Material: zama and zinc-plated steel

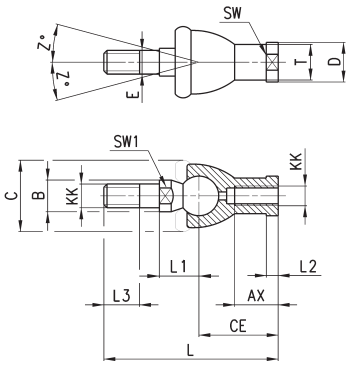

DIMENSIONS																
Mod.	Ø	KK	L	CE	L2	AX	E	øB	øC	øT	øD	L1	L3	SW1	SW	Z
GY-12-16	12	M6X1	55	28	5	15	6	10	20	10	13	12,2	11	8	11	15
GY-20	16	M8X1,25	65	32	5	16	8	12	24	12,5	16	16	12	10	14	15
GY-32	20÷40	M10X1,25	74	35	6,5	18	10	14	28	15	19	19,5	15	11	17	15
GY-40	50÷63	M12X1,25	84	40	6,5	20	12	19	32	17,5	22	21	17	17	19	15
GY-50-63	80	M16X1,5	112	50	8	27	16	22	40	22	27	27,5	23	19	22	11
GY-80-100	100	M20X1,5	133	63	10	38	20	27	45	27,5	34	31,5	25	24	30	7,5

Self aligning rod Mod. GK

For cylinders with male rod only.

Material: zinc-plated steel

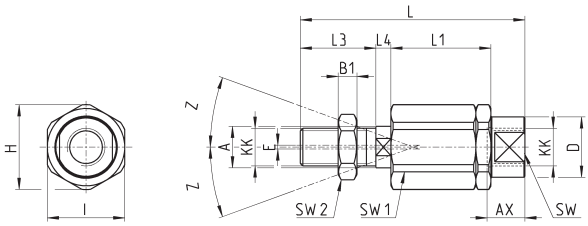

DIMENSIONS																	
Mod.	Ø	KK	L	L1	L3	L4	Ø A	Ø D	H	I	SW	SW1	SW2	B1	AX	Z	E
GK-20	16	M8x1,25	57	26	21	5	8	12,5	19	17	11	7	13	4	16	4	2
GK-25-32	20-25-32-40	M10x1,25	71,5	35	20	7,5	14	22	32	30	19	12	17	5	22	4	2
GK-40	50-63	M12x1,25	75,5	35	24	7,5	14	22	32	30	19	12	19	6	22	4	2
GK-50-63	80	M16x1,5	104	53	32	10	22	32	45	41	27	20	24	8	30	3	2
GK-80-100	100	M20x1,5	119	53	40	10	22	32	45	41	27	20	30	10	37	3	2

Coupling piece Mod. GKF

Material: zinc-plated steel

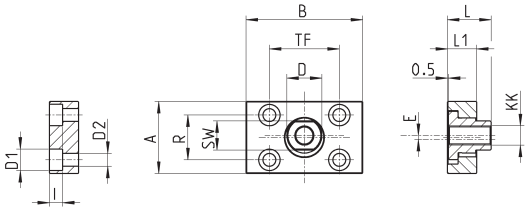

DIMENSIONS														
Mod.	Ø	KK	A	B	R	TF	L	L1	I	Ø D	Ø D1	Ø D2	SW	E
GKF-20	16	M8x1,25	30	35	20	25	22,5	10	-	14	5,5	-	13	1,5
GKF-25-32	20-25-32-40	M10x1,25	37	60	23	36	22,5	15	6,8	18	11	6,6	15	2
GKF-40	50-63	M12x1,25	56	60	38	42	22,5	15	9	20	15	9	15	2,5
GKF-50-63	80	M16x1,5	80	80	58	58	26,5	15	10,5	25	18	11	22	2,5
GKF-80-100	100	M20x1,5	90	90	65	65	32,5	20	13	30,5	20	14	27	2,5

Series 31 compact cylinders, Tandem and Multi-position versions

Double-acting, magnetic
ø 12, 16, 20, 25, 32, 40, 50, 63, 80, 100 mm

- Compact design
- Available in different diameters and strokes
- Standard magnetic

The compact dimensions allow Series 31 cylinders to be installed within very small spaces. These cylinders are suitable for use with feet, flange and trunnion mountings.

In order to complete the compact cylinder series, two new versions have been introduced: tandem and multi-position. The new Tandem version with 2, 3 or 4 stages generates a thrust force which is 2, 3 or 4 times that of the normal cylinder (standard traction force).
The Multi-position version allows a maximum of 3 different positions which are determined by the stroke of the individual actuators.

GENERAL DATA

Type of construction	compact profile
Operation	double-acting
Materials	AL body and end-blocks - rolled stainless steel AISI 303 rod - AL piston - PU rod and piston seals
Mounting	flange - feet - trunnion
Min and max strokes (for tandem 31M and 31F)	ø12÷25 = 1÷80 mm ø32÷100 = 1÷100 mm
Min and max strokes (for multi-position 31M and 31F)	ø12÷25 = dimension for X2 max 200 mm ø32÷63 = dimension for X2 max 300 mm ø80÷100 = dimension for X2 max 400 mm
Operating temperature	0°C ÷ 80°C (with dry air -20°C)
Operating pressure	1 ÷ 10 bar
Medium:	filtered air, without lubrication. If lubricated air is used, it is recommended to use ISO VG32 oil. Once applied the lubrication should never be interrupted.
Speed:	10 ÷ 1000 mm/sec (without load)

CODING EXAMPLE

31	M	2	A	032	A	050	N	2

31	SERIES	
M	VERSION M = male rod thread, mounted with rod nut Mod. U F = female rod thread	
2	OPERATION 2 = double-acting	PNEUMATIC SYMBOLS CDPP
A	MATERIALS A = rolled stainless steel rod AISI 303 - AL tube profile	
032	BORE 012 = 12 mm - 016 = 16 mm - 020 = 20 mm - 025 = 25 mm 032 = 32 mm - 040 = 40 mm - 050 = 50 mm - 063 = 63 mm 080 = 80 mm - 100 = 100 mm	 CD5T, CD6T, CD7T CD2T, CD3T, CD4T CD2T, CD3T, CD4T
A	CONSTRUCTION TYPE A = standard	
050	STROKE - tandem stroke (mm) - multi-position X1mm/X2mm. Insert stroke without the initial 0 (see application scheme).	
N	TANDEM AND MULTI-POSITION	
2	STAGES (only for tandem) 2 = 2 stages - 3 = 3 stages - 4 = 4 stages	

PNEUMATIC SYMBOLS

The pneumatic symbols which have been indicated in the CODING EXAMPLE are shown below.

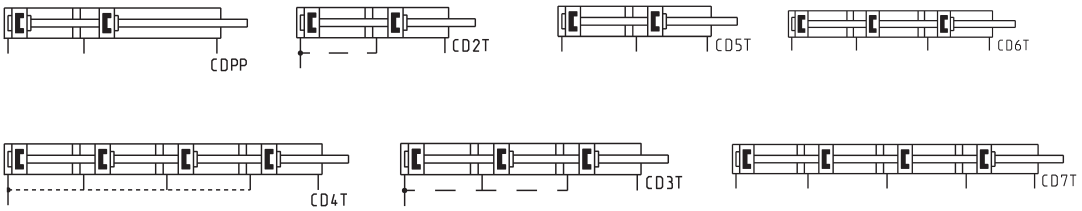

Application schemes

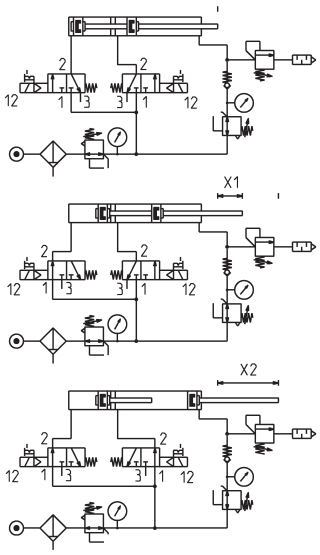

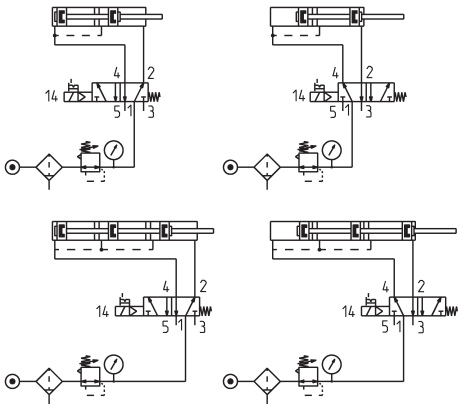

Multi-position
Example for ordering:
X1 = 25 mm and X2 = 100 mm
31M2A032A25/100N

Tandem
Example for ordering:
stroke 25 mm
31M2A032A025N2 (2 stages)

Cylinders Series 31 - Tandem version

Mod. 31F2A...N...
Mod. 31M2A...N...

+ = add the stroke once
++ = add the stroke twice
+++ = add the stroke three times
++++ = add the stroke four times
(1) = air inlet cylinders ø12, 16, 20, 25

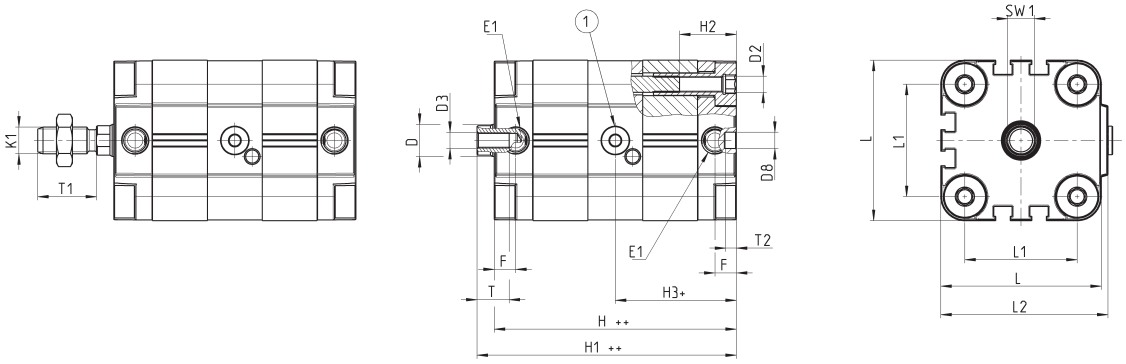

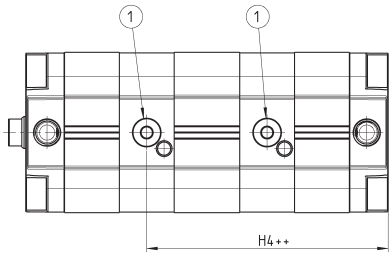

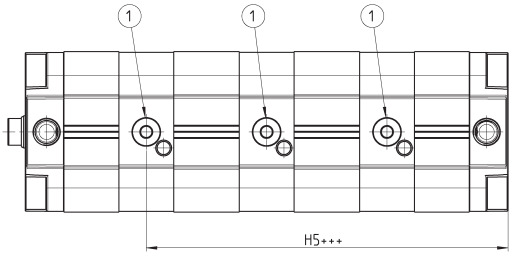

DIMENSIONS																							
Ø	øD	D2	D3	øD8	E1	F	H++	H1++	H2	H3+	H4++	H5+++	K1	L	L1	L2	T	T1	T2	SW1	3ST.$_{H+++}$	3ST.$_{H1+++}$	4ST.$_{H++++}$	4ST.$_{H1++++}$
12	6	M4	M3	6	M5	8	63,5	68	12,5	34,5	60	85,5	M6	29	18	30	6	16	4	5	89	93,5	114,5	119
16	8	M4	M4	6	M5	8	63,5	68	12,5	34,5	60,5	86,5	M8	29	18	30	8	20	4	7	89,5	94	115,5	120
20	10	M5	M5	6	M5	8	78	82.5	17	43,5	83,5	123,5	M10x1,25	36	22	37,5	10	22	4	8	118	122,5	158	162,5
25	10	M5	M5	6	M5	8	78	83,5	17	39,1	78,1	117,1	M10x1,25	40	26	41,5	10	22	4	8	117	122,5	156	161,5
32	12	M6	M6	6	G1/8	8	90,5	96,5	21,5	46,5	92,6	138,7	M10x1,25	50	32	52	12	22	4	10	136,5	142,5	182,5	188,5
40	12	M6	M6	6	G1/8	8	90,5	97	21,5	46,5	90,2	135,2	M10x1,25	60	42	62,5	12	22	4	10	135,5	142	180,5	187
50	16	M8	M8	6	G1/8	8	90,5	98	18	47,5	92,5	137,5	M12x1,25	68	50	71	12	24	4	13	135,5	143	180	188
63	16	M10	M8	8	G1/8	8	100,5	108	26	50,2	100,7	151,2	M12x1,25	87	62	91	12	24	4	13	151	158,5	201,5	209
80	20	M10	M10	8	G1/8	8,5	112	120	26,5	59	115	171	M16x1,5	107	82	111	16	32	4	17	168	176	224	232
100	25	M10	M12	8	G1/4	10,5	135,5	145,5	26,5	71,3	140,4	209,5	M20x1,5	128	103	133	20	40	4	22	204,5	214,5	237,5	283,5

Cylinders Series 31 - multi-position version

Mod. 31F2A...X1-X2N
Mod. 31M2A...X1-X2N

X1 = stroke of stage 1
X2 = total stroke of application scheme
+ = add the stroke

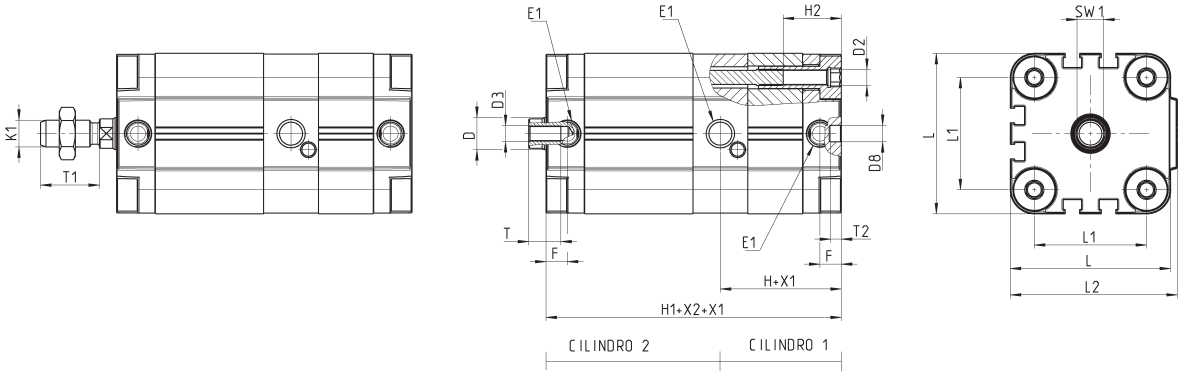

DIMENSIONS																	
Ø	øD	D2	D3	øD8	E1	F	H+x1	H1+x2+x1	H2	K1	L	L1	L2	T	T1	T2	SW1
12	6	M4	M3	6	M5	8	34,5	63,5	12,5	M6	29	18	30	6	16	4	5
16	8	M4	M4	6	M5	8	34,5	63,5	12,5	M8	29	18	30	8	20	4	7
20	10	M5	M5	6	M5	8	43,5	78	17	M10x1,25	36	22	37,5	10	22	4	8
25	10	M5	M5	6	M5	8	39,1	78	17	M10x1,25	40	26	41,5	10	22	4	8
32	12	M6	M6	6	G1/8	8	46,5	90,5	21,5	M10x1,25	50	32	52	12	22	4	10
40	12	M6	M6	6	G1/8	8	45	90,5	21,5	M10x1,25	60	42	62,5	12	22	4	10
50	16	M8	M8	6	G1/8	8	47	90,5	18	M12x1,25	68	50	71	12	24	4	13
63	16	M10	M8	8	G1/8	8	50	100,5	26	M12x1,25	87	62	91	12	24	4	13
80	20	M10	M10	8	G1/8	8,5	59	112	26,5	M16x1,5	107	82	111	16	32	4	17
100	25	M10	M12	8	G1/4	10,5	71	135,5	26,5	M20x1,5	128	103	133	20	40	4	22

Series ST
Stopper cylinders

Single and double-acting, magnetic, non-rotating
Sizes 20, 32, 40, 50 mm

- In compliance with UNITOP and ISO 21287 standards
- Compact design
- Can be used with magnetic sensors
- Reliable and silent
- Non-rotating rod version
- Roller rod version
- Female threaded rod version
- High capacity to absorb kinetic energy of workpiece-holder pallets
- Mechanical end-stroke shock absorbers
- schéma d'application totale

The Series ST Stopper cylinders are pneumatic actuators with rod, complying with UNITOP and ISO 21287 standards, where rod and bushing have been specifically enlarged to ensure high resistance to radial loads and shocks. These cylinders are available in two versions, double-acting and single-acting, and with rear spring. The non-rotating rod version is also available.

The detection of the piston position is enabled by means of proximity switches (Mod. CST or CSH) which are mounted in slots along three sides of the cylinder profile. It is possible to cover the slots with a proper profile (Mod. S-CST-500). The high resistance to shocks and radial loads and the easy mounting makes Series ST particularly suitable for use in transport/conveyor lines where it is required to stop the transit of workpieces and workpiece-holder pallets.

GENERAL DATA

Construction	profile with self-tapping screws
Cylinder design	compact based on UNITOP and ISO 21287 standards
Operation	double-acting, single-acting rear spring, double-acting rear spring
Sizes	20, 32, 40 (Mod. ST32 only), 50 mm
Strokes (min - max)	5 ÷ 30 mm (see the table of standard strokes)
Rod versions	without thread, with female thread, non-rotating, non-rotating with feemale thread, non-rotating with roller
Non-rotating function	with technopolymer anti-friction ring
Fixing and mounting	direct with holes on the end-caps, in any position
Type of cushioning	mechanical end-stroke shock absorbers in rubber
Max frequency	5 Hz (Ø 20, 32, 40 mm) - 3 Hz (Ø 50 mm)
Working temperature	0°C ÷ 80°C (with dry air -20°C)
Storage temperature	-20°C ÷ 100°C
Working pressure	1 ÷ 10 bar (double-acting) - 2 ÷ 10 bar (single-acting)
Max rotation play	± 4° (Ø 20, 32 e 40 mm) - ± 3° (Ø 50 mm)
Max torque (for non-rotating version)	1.5 Nm (Ø 20 mm) - 2.5 Nm (Ø 32 e 40 mm) - 3.5 Nm (Ø 50 mm)
Medium	filtered air in class 7.8.4 according to ISO 8573-1 standard.
Lubrication	Not required. The cylinder is pre-lubricated. If lubricated air is used, it is recommended to use oil ISOVG32. Once applied the lubrication should never be interrupted.
Use with external sensors	slots on the three sides for proximity switches Mod. CST and CSH

STANDARD STROKES

✖ = Single-acting and double-acting

STANDARD STROKES						
Mod.	Ø	10	15	20	25	30
ST31	20		✖			
ST31	32			✖		
ST31	50					✖
ST32	20	✖	✖			
ST32	32		✖	✖	✖	
ST32	40			✖	✖	✖
ST32	50			✖	✖	✖

CODING EXAMPLE

ST	31	2	A	050	A	030

ST	SERIES	
31	CONSTRUCTION STANDARD: 31 = UNITOP 32 = ISO 21287	
2	OPERATION: 2 = double-acting 4 = single-acting, rear spring 9 = double-acting, rear spring	PNEUMATIC SYMBOLS: CD20 / CD08 CS15 / CS08 CS16 / CS17
A	DESIGN: A = standard R = non-rotating (for Mod. ST32 only)	
050	BORE: 020 = 20 mm 032 = 32 mm 040 = 40 mm (for Mod. ST32 only) 050 = 50 mm	
A	CONSTRUCTION: A = standard R = with roller (for non-rotating version only) F = with female thread (for Mod. ST32 only)	
030	STROKE (see the table)	
	VERSION: = standard (_ _ _) = extended piston rod _ _ _ mm	

PNEUMATIC SYMBOLS

The pneumatic symbols which have been indicated in the CODING EXAMPLE are shown below.

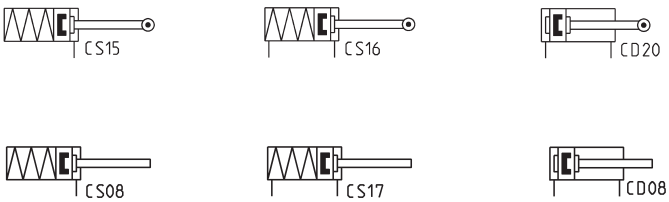

SERIES ST MATERIALS

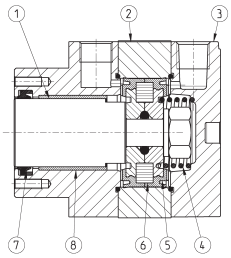

PARTS	MATERIALS
1 - Rod	Stainless steel
2 - Profile	Anodized aluminium
3 - Head	Anodized aluminium
4 - Spring	Steel
5 - Piston seal	PU
6 - Magnet	Plastoferrite
7 - Rod seal	PU
8 - Rod guide bushing	Technopolymer
9 - Non-rotating ring	Technopolymer
10 - Roller	Stainless steel

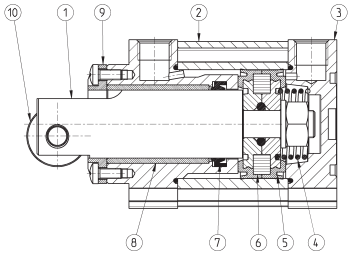

EXAMPLES OF FIXING

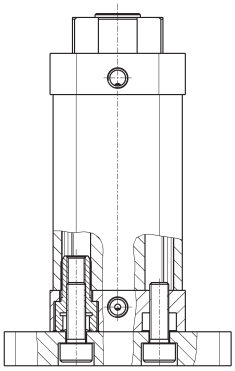

Fixing from below

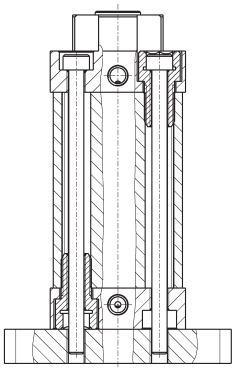

Fixing from above

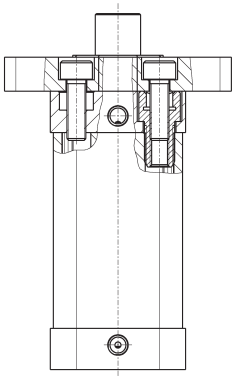

IMPACT FORCE

Between the mass to stop and the stopper rod, an elastic bumper is assumed to be inserted, which is capable of absorbing the impact by deforming at least 1mm.

	20	32	40	50
ST	1320 (N)	3200 (N)	5500 (N)	6200 (N)
ST...R	820 (N)	2600 (N)	4450 (N)	5900 (N)

DIAGRAMS OF MASS/ IMPACT SPEED

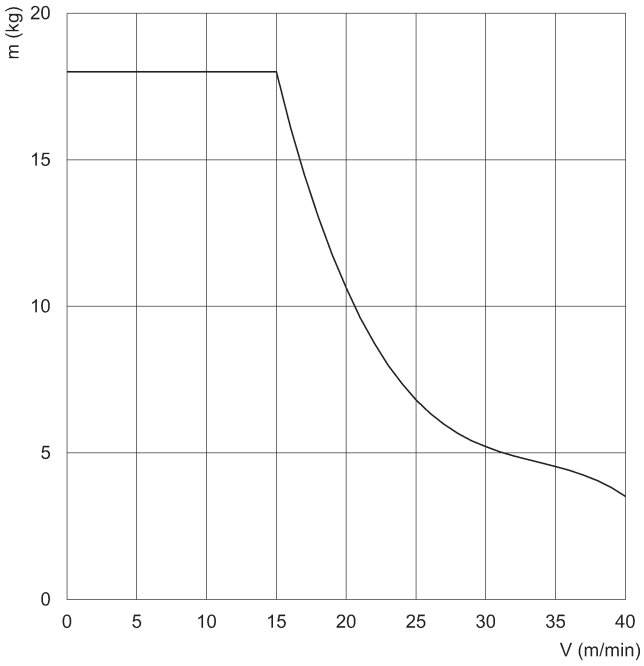

Cylinders Ø 20 mm

m = mass (kg)
V = impact speed (m/min)

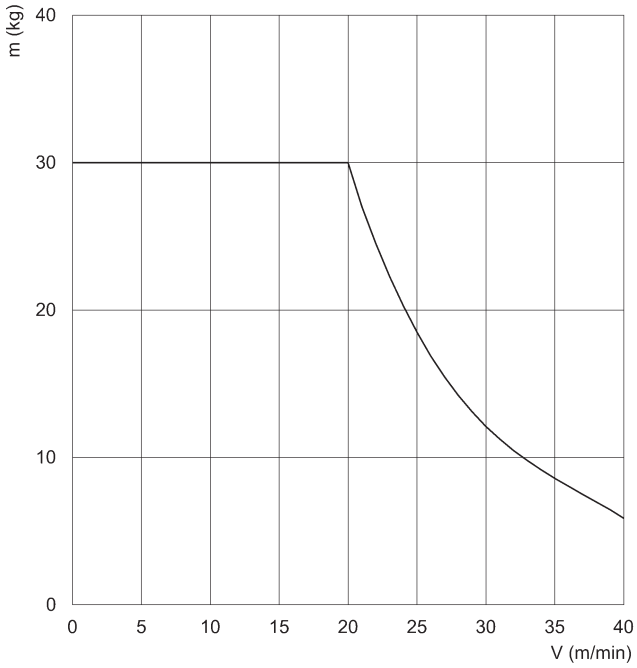

Cylinders Ø 32 mm

m = mass (kg)
V = impact speed (m/min)

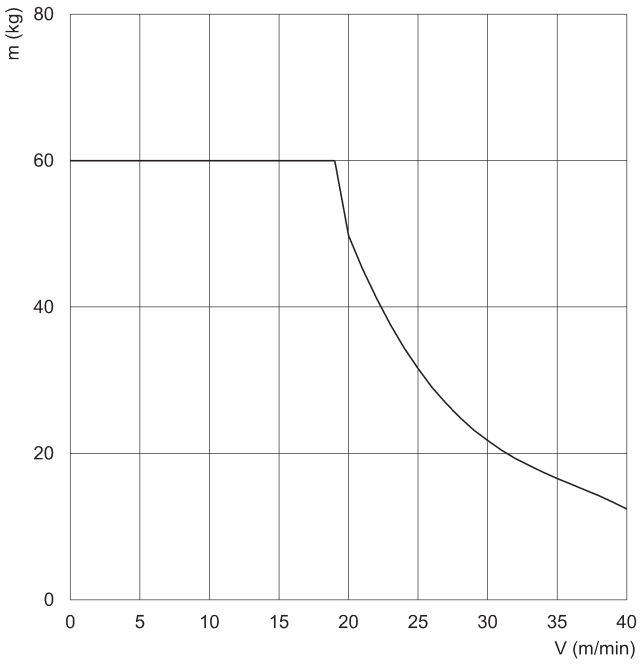

Cylinders Ø 40 mm

m = mass (kg)
V = impact speed (m/min)

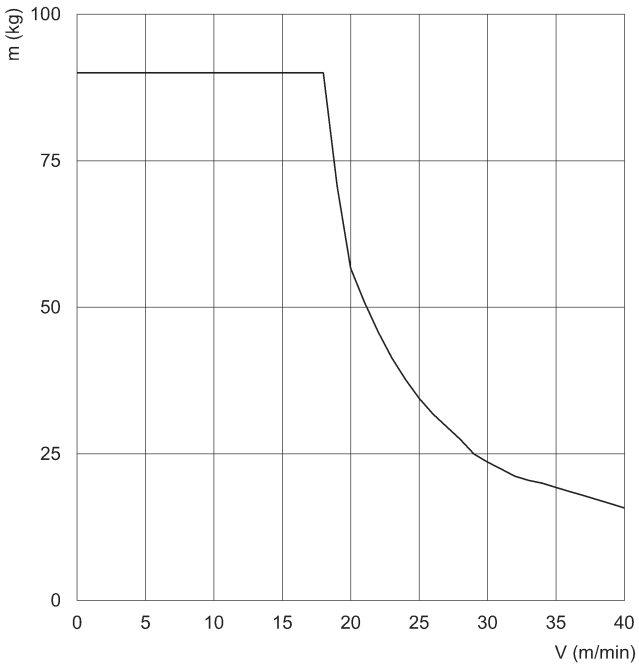

Cylinders Ø 50 mm

m = mass (kg)
V = impact speed (m/min)

DIAGRAMS OF APPLICABLE LATERAL FORCES DURING OPERATION

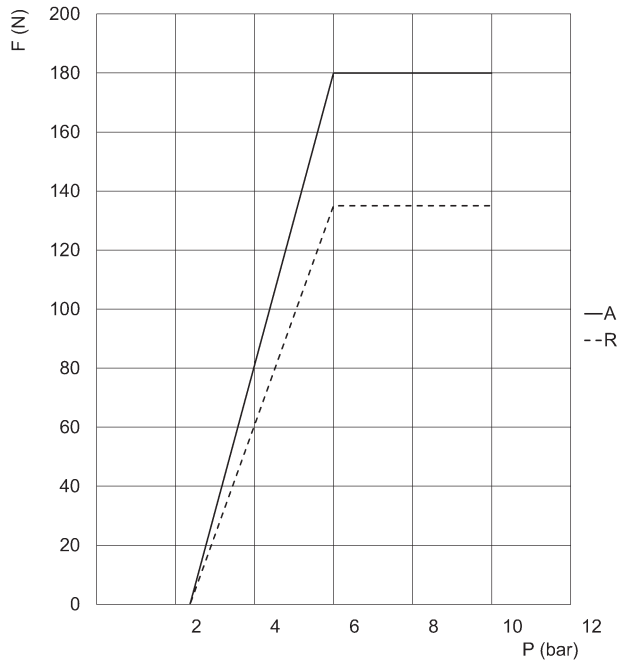

Cylinders ø 20 mm, standard (A) and non-rotating (R) version

P = Pressure (bar)
F = applicable lateral Force (N)

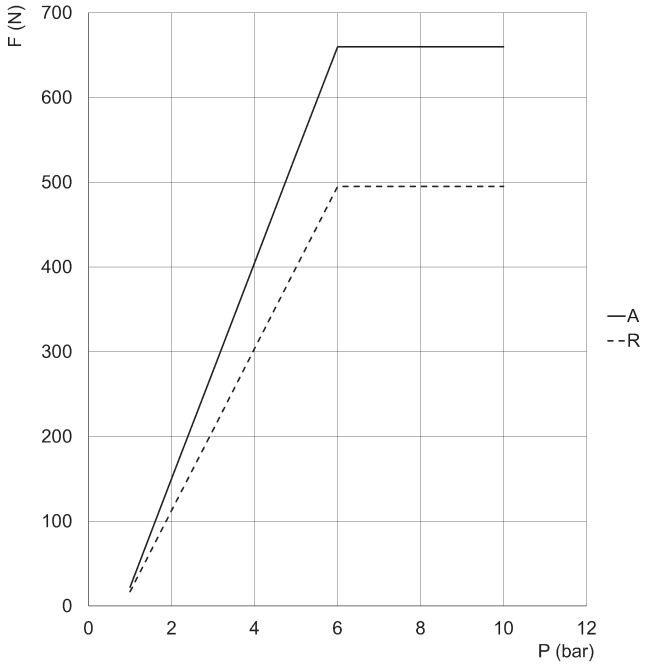

Cylinders ø 32 mm, standard (A) and non-rotating (R) version

P = Pressure (bar)
F = applicable lateral Force (N)

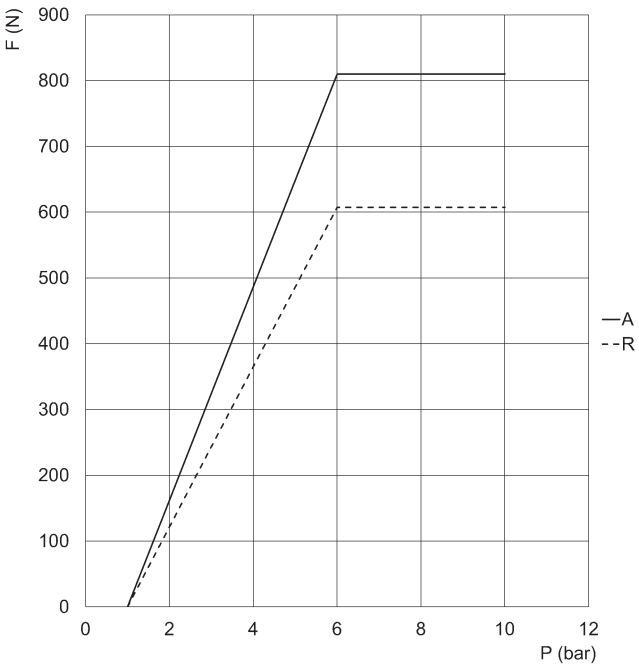

Cylinders ø 40 mm, standard (A) and non-rotating (R) version

P = Pressure (bar)
F = applicable lateral Force (N)

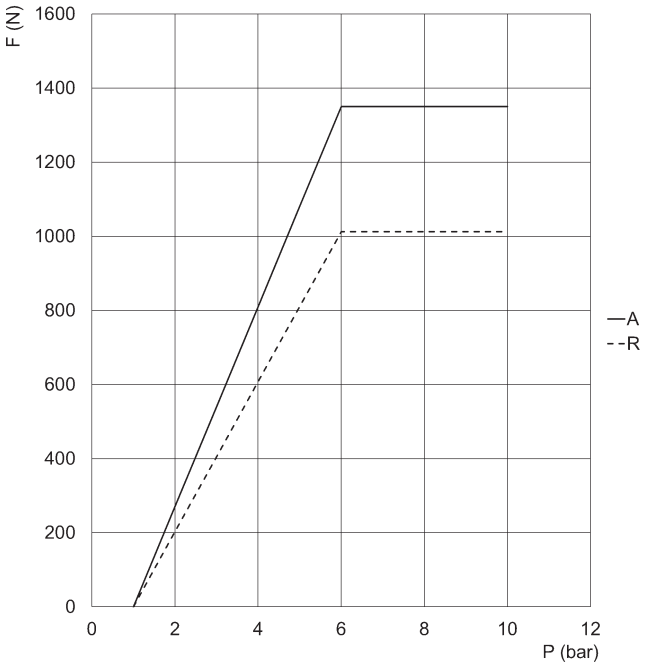

Cylinders ø 50 mm, standard (A) and non-rotating (R) version

P = Pressure (bar)
F = applicable lateral Force (N)

DIAGRAM OF THE SPRING FORCES ACCORDING TO THE CYLINDER STROKE

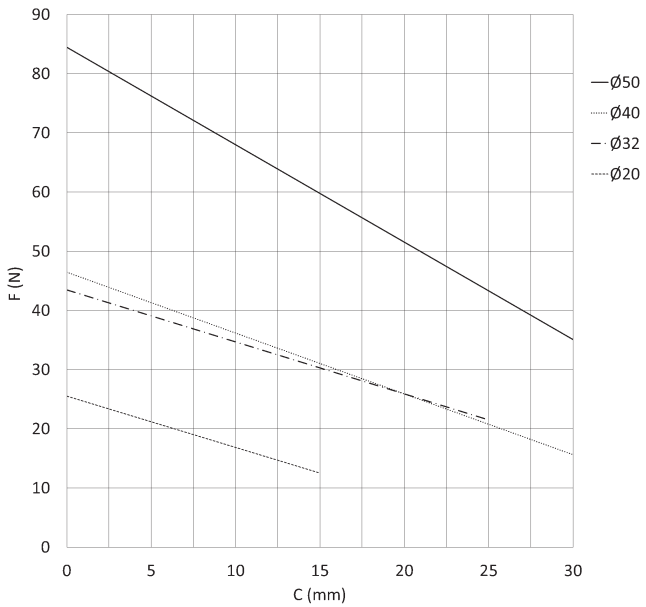

F = Force
C = Stroke

Stopper cylinders Mod. ST31 (UNITOP)

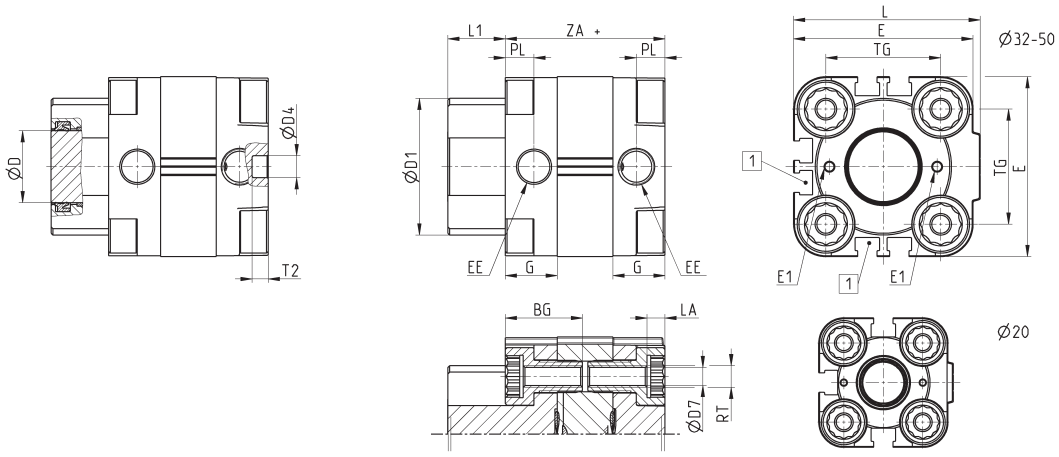

Ø	BG	G	ØD	ØD1	ØD4	ØD7	E	EE	E1	L	LA	L1	PL	RT	T2	TG	ZA	ZB
20	18.5	12	12	26	6	4	35.5	G1/8	M2	38	5	11.5	8	M5	4.5	22	38	49.5
32	21.5	14.5	20	38	6	5	50	G1/8	M3	52	5	16	8	M6	4.5	32	45	60.5
50	20	14.5	32	53	6	6	68	G1/8	M3	71	6	24	8	M8	4.5	50	46	69.5

Stopper cylinders Mod. ST32 (ISO 21287)

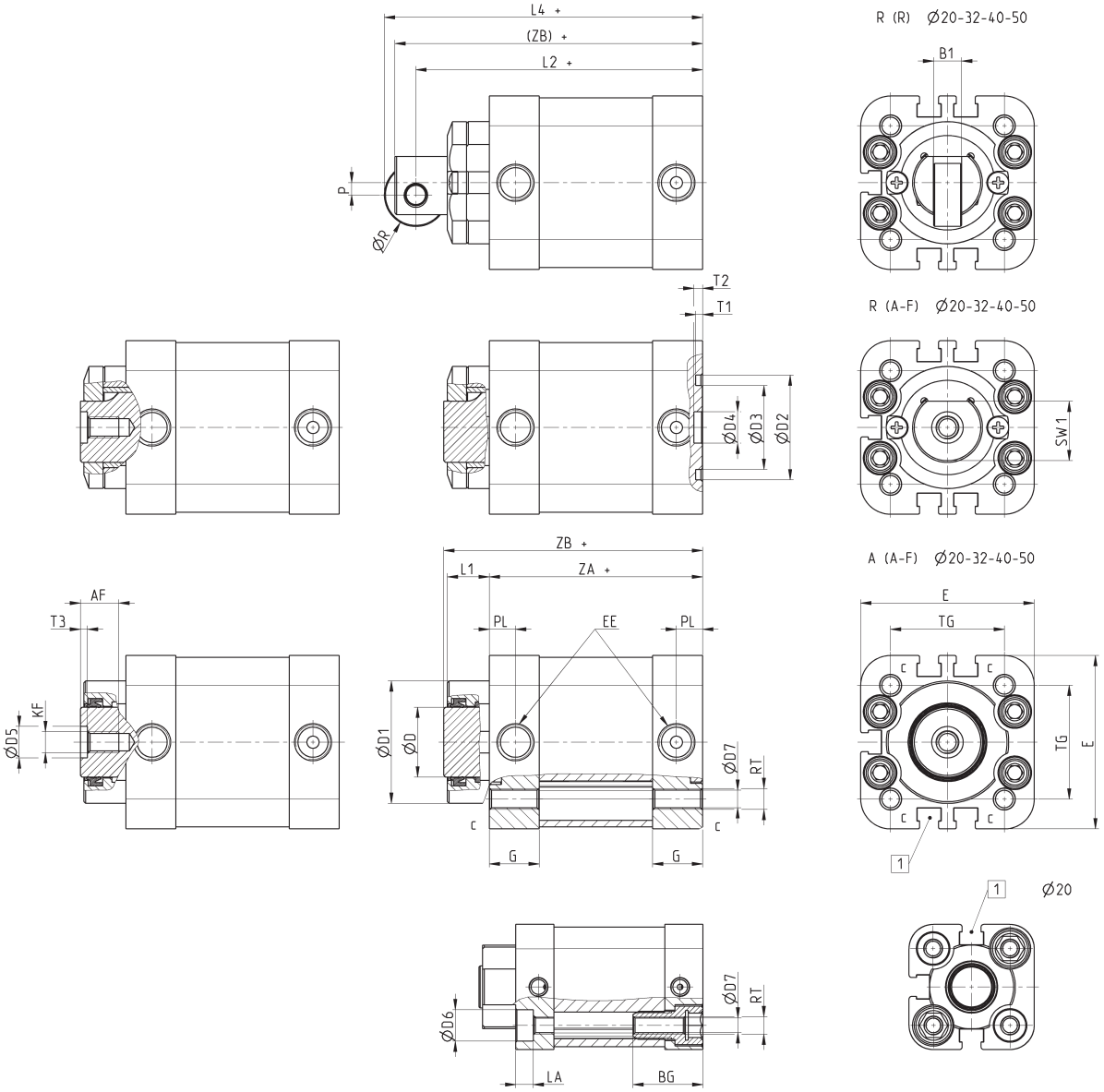

Ø	AF	BG	B1	G	ØD	ØD1	ØD2	ØD3	ØD4	ØD5	ØD6	ØD7	E	EE	KF	LA	L1	L2	L4	P	PL	ØR	RT	SW1	T1	T2	T3	TG	ZA	ZB	(ZB)
20	6	20	4	10.9	12	25	-	-	9	5	9	4	35.8	M5	M3	5	9.5	68	73	2	6.5	10	M5	10	-	2.5	1.2	22	53.5	64	71
32	11	-	8	14.3	20	35	30	24	9	9	-	5	49.6	G1/8	M6	-	12	82	91	3.5	7.6	18	M6	17.5	2	2.5	2	32.5	61	74	88
40	14.5	-	8	14.3	25	43	35	29	12	12	-	5	57	G1/8	M8	-	12.5	90	101	5	7.6	22	M6	22	2	2.5	2.5	38	66.5	80	97
50	14.5	-	10	14.3	32	51	40	34	12	12	-	6	69.6	G1/8	M8	-	14.5	92.5	105	7	7.6	25	M8	28	2	3	2.5	46.5	65.5	81	100

Series 90 stainless steel cylinders

Single- and double-acting, cushioned, magnetic ø 32, 40, 50, 63, 80, 100 and 125 mm

- In compliance with ISO 15552 standards and with the previous DIN/ISO 6431/ VDMA 24562 standards
- Clean design
- Stainless steel AISI 316
- End-stroke cushioning

The Series 90 cylinders can be used in critical applications in which a high corrosion resistance is required (for example off-shore, marine, food).

This series of cylinders is normally equipped with end of stroke buffers with adjustable pneumatic cushioning. Moreover, they are equipped with a mechanical cushioning that makes the impact of the piston less noisy as it reaches the end of the stroke.

GENERAL DATA

Construction	with tie-rods
Operation	single-acting or double-acting
Design	ISO 15552
Materials	- end blocks, barrel and rod in stainless steel AISI 316 - seals in NBR - plastic guiding element, NSF H1-certified lubricant
Mountings	several types of cylinders mounting brackets available
Stroke	25 ÷ 800 mm
Operating temperature	0°C ÷ 80°C (with dry air - 20°C)
Operating pressure	1 ÷ 10 bar
Speed	10 ÷ 1000 mm/sec (no load)
Media	Filtered air, without lubrication. If lubricated air is used, it is recommended to use oil ISOVG32. Once applied the lubrication should never be interrupted.

STANDARD STROKES FOR CYLINDER SERIES 90

✖ = Double-acting
● = Single-acting

STANDARD STROKES													
Ø	25	50	80	100	125	150	160	200	250	300	320	400	500
32	✖ ●	✖ ●	✖	✖	✖	✖	✖	✖	✖	✖	✖	✖	✖
40	✖ ●	✖ ●	✖	✖	✖	✖	✖	✖	✖	✖	✖	✖	✖
50	✖ ●	✖ ●	✖	✖	✖	✖	✖	✖	✖	✖	✖	✖	✖
63	✖ ●	✖ ●	✖	✖	✖	✖	✖	✖	✖	✖	✖	✖	✖
80	✖ ●	✖ ●	✖	✖	✖	✖	✖	✖	✖	✖	✖	✖	✖
100	✖ ●	✖ ●	✖	✖	✖	✖	✖	✖	✖	✖	✖	✖	✖
125		✖ ●	✖	✖	✖	✖	✖	✖	✖	✖	✖	✖	✖

CODING EXAMPLE

90	M	2	A	050	A	0200	

90	SERIES	
M	VERSION M = standard, magnetic	
2	OPERATION 1 = single-acting, front spring 2 = double-acting, front and rear cushions 6 = double-acting, through-rod, front and rear cushions	PNEUMATIC SYMBOLS CS06 CD09 CD13
A	MATERIALS A = stainless steel AISI 316, seals in NBR V = stainless steel AISI 316, all seals in FKM (150°C)	
050	BORE 032 = 32 mm - 040 = 40 mm - 050 = 50 mm - 063 = 63 mm 080 = 80 mm - 100 = 100 mm - 125 = 125 mm	
A	TYPE OF DESIGN A = standard with piston rod lock nut Mod. U	
0200	STROKE (see the table)	
	= standard V = rod seal in FKM	

PNEUMATIC SYMBOLS

The pneumatic symbols which have been indicated in the CODING EXAMPLE are shown below.

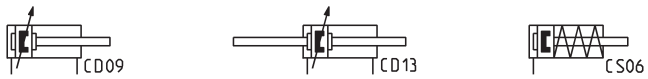

ACCESSORIES FOR STAINLESS STEEL CYLINDERS SERIES 90

Foot mount Mod. B

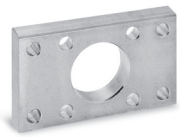

Front and rear flange Mod. D-E

Rear trunnion, female Mod. C-H

Rear trunnion, male Mod. L

Tight rear female tr. bracket Mod. CR

Male tr. bracket with swivel ball joint Mod. R

90° male tr. bracket + sw. ball joint Mod. ZCR

90° male trunnion Mod. ZC

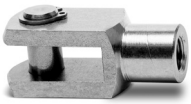

Rod fork end Mod. G-90

Clevis pin Mod. S-90

Anti-rotation clevis pin Mod. SR-90

Swivel ball joint Mod. GA-90

Piston rod lock nut Mod. U-90

All accessories are supplied separately, except for the piston rod lock nut Mod. U

Cylinders Series 90

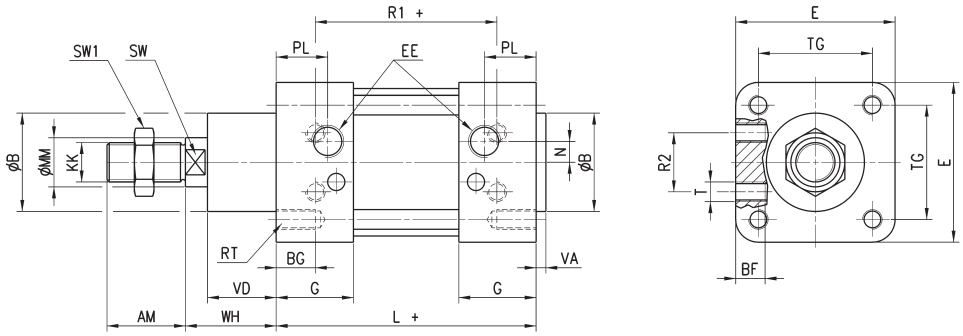

+ = add the stroke

DIMENSIONS																						
Ø	AM	B	BF	BG	E	EE	G	KK	L	MM	N	PL	RT	R1	R2	SW	SW1	T	TG	VA	VD	WH
32	22	30	10	16	45	G1/8	28	M10x1.25	94	12	4.5	14	M6	64	16	10	17	M5	32.5	4	20	26
40	24	35	10	16	55	G1/4	31.5	M12x1.25	105	16	5.5	16	M6	70	21	13	19	M6	38	4	22	30
50	32	40	12	16	65	G1/4	31.5	M16x1.5	106	20	8.5	21	M8	74	24	17	24	M8	46.5	4	28	37
63	32	45	12	16	80	G3/8	35	M16x1.5	121	20	8.5	22	M8	85	33	17	24	M8	56.5	4	28	37
80	40	45	15	16	95	G3/8	36	M20x1.5	128	25	8.5	23	M10	92	34	21	30	M10	72	4	34	46
100	40	55	15	16	115	G1/2	41	M20x1.5	138	25	10	26	M10	100	58	21	30	M10	89	4	38	51
125	54	60	24	20	140	G1/2	45	M27x2	160	32	12.5	30	M12	110	65	27	41	M12	110	5	50	65

Cylinders Series 90 - through-rod

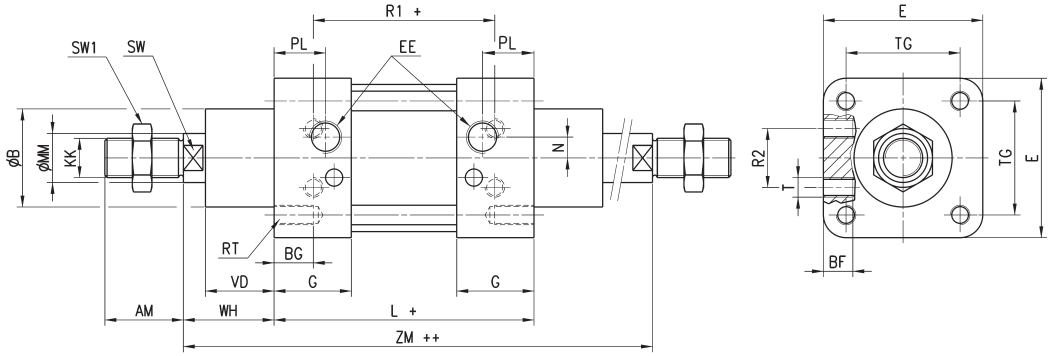

+ = add the stroke once
++ = add the stroke twice

DIMENSIONS																						
Ø	AM	B	BF	BG	E	EE	G	KK	L	MM	N	PL	RT	R1	R2	SW	SW1	T	TG	VD	WH	ZM
32	22	30	10	16	45	G1/8	28	M10x1.25	94	12	4.5	14	M6	64	16	10	17	M5	32.5	20	26	146
40	24	35	10	16	55	G1/4	31.5	M12x1.25	105	16	5.5	16	M6	70	21	13	19	M6	38	22	30	165
50	32	40	12	16	65	G1/4	31.5	M16x1.5	106	20	8.5	21	M8	74	24	17	24	M8	46.5	28	37	180
63	32	45	12	16	80	G3/8	35	M16x1.5	121	20	8.5	22	M8	85	33	17	24	M8	56.5	28	37	195
80	40	45	15	16	95	G3/8	36	M20x1.5	128	25	8.5	23	M10	92	34	21	30	M10	72	34	46	220
100	40	55	15	16	115	G1/2	41	M20x1.5	138	25	10	26	M10	100	58	21	30	M10	89	38	51	240
125	54	60	24	20	140	G1/2	45	M27x2	160	32	12.5	30	M12	110	65	27	41	M12	110	50	65	290

Foot mount Mod. B

Material: stainless steel 316

Supplied with:
2x feet
4x screws

+ = add the stroke

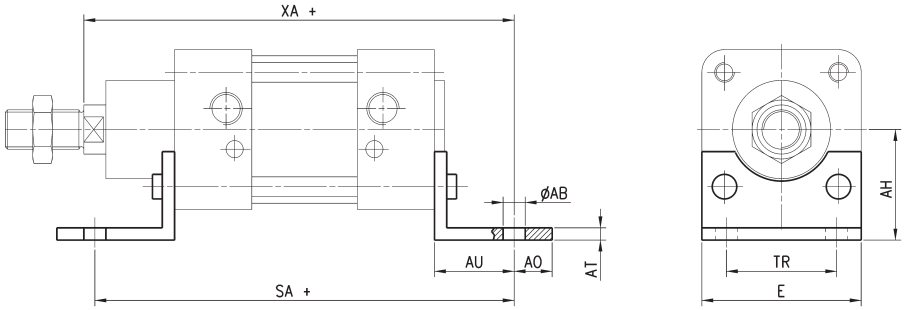

DIMENSIONS										
Mod.	Ø	ØAB	AH	AO	AT	AU	E	TR	SA+	XA+
B-90-32	32	7	32	11	4	24	45	32	142	144
B-90-40	40	9	36	8	4	28	52	36	161	163
B-90-50	50	9	45	15	5	32	65	45	170	175
B-90-63	63	9	50	13	5	32	75	50	185	190
B-90-80	80	12	63	14	6	41	95	63	210	215
B-90-100	100	14	75	16	6	41	115	75	220	230
B-90-125	125	16	90	25	8	45	140	90	250	270

Front and rear flange Mod. D-E

Material: stainless steel 316

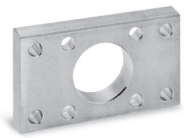

Supplied with:
1x flange
4x screws

+ = add the stroke

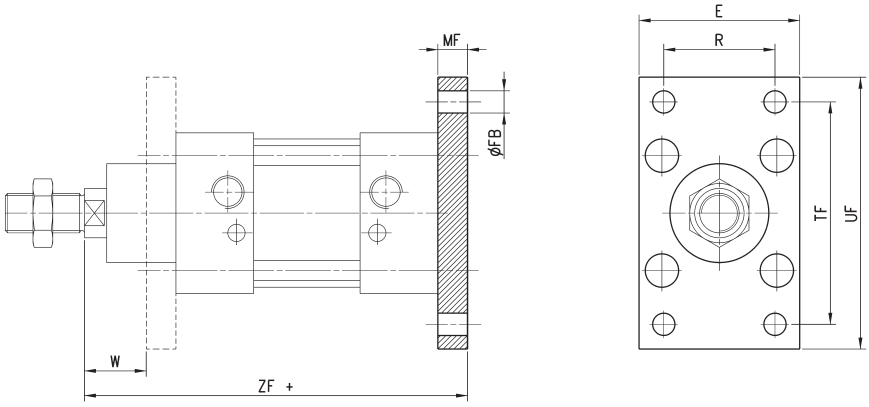

DIMENSIONS									
Mod.	Ø	E	ØFB	MF	TF	UF	W	ZF+	R
D-E-90-32	32	45	7	10	64	80	16	130	32
D-E-90-40	40	52	9	10	72	90	20	145	36
D-E-90-50	50	65	9	12	90	110	25	155	45
D-E-90-63	63	75	9	12	100	120	25	170	50
D-E-90-80	80	95	12	15	126	150	30	190	63
D-E-90-100	100	115	14	15	150	170	35	205	75
D-E-90-125	125	140	16	20	180	205	45	245	90

Rear trunnion, female Mod. C-H

Material: stainless steel 316

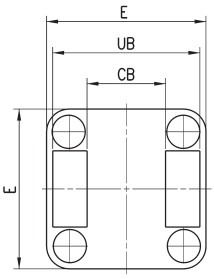

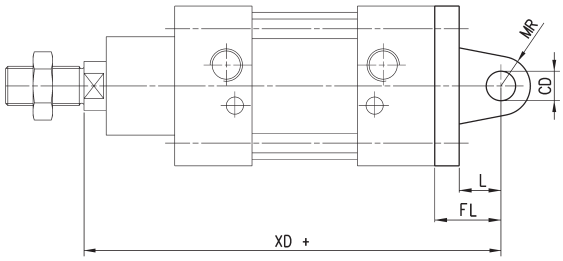

Supplied:
1x female trunnion
4x screws

+ = add the stroke

DIMENSIONS									
Mod.	Ø	CB	CD	E	FL	L	MR	UB	XD+
C-H-90-32	32	26	10	45	22	12	10	45	142
C-H-90-40	40	28	12	55	25	15	12	52	161
C-H-90-50	50	32	12	65	27	17	12	60	170
C-H-90-63	63	40	16	75	32	20	16	70	185
C-H-90-80	80	50	16	95	36	22	16	90	210
C-H-90-100	100	60	20	115	41	25	20	110	230
C-H-90-125	125	70	25	140	50	30	25	130	275

Rear trunnion, male Mod. L

Material: stainless steel 316

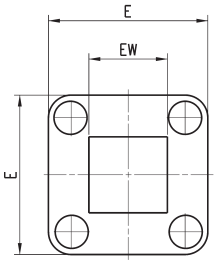

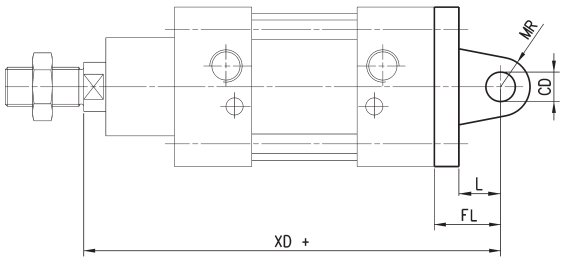

Supplied:
1x male trunnion
4x screws

+ = add the stroke

DIMENSIONS								
Mod.	Ø	EW	CD	E	FL	L	MR	XD+
L-90-32	32	26	10	45	22	12	10	142
L-90-40	40	28	12	55	25	15	12	161
L-90-50	50	32	12	65	27	17	12	170
L-90-63	63	40	16	75	32	20	16	185
L-90-80	80	50	16	95	36	22	16	210
L-90-100	100	60	20	115	41	25	20	230
L-90-125	125	70	25	140	50	30	25	275

Tight rear female trunnion bracket Mod. CR

Material: stainless steel 316

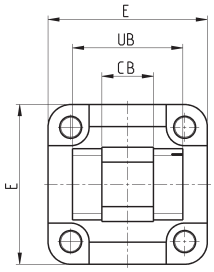

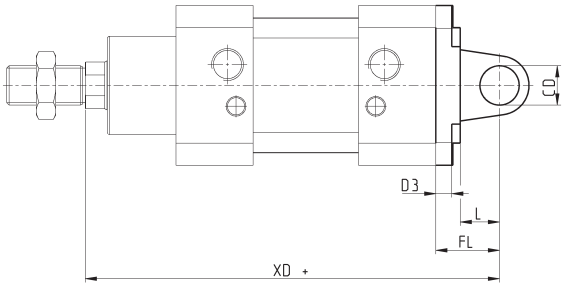

Supplied with:
1x female trunnion bracket
4x screws

+ = add the stroke

DIMENSIONS									
Mod.	Ø	CB	CD	E	FL	L	UB	XD	D3
CR-90-32	32	14	10	45	22	12	34	142	5.5
CR-90-40	40	16	12	55	25	25	40	161	5.5
CR-90-50	50	21	16	65	27	27	45	170	6.5
CR-90-63	63	21	16	75	32	32	51	185	6.5
CR-90-80	80	25	20	95	36	36	65	210	10
CR-90-100	100	25	20	114	41	41	75	230	10
CR-90-125	125	37	30	140	50	50	97	275	10

Male trunnion bracket with swivel ball joint Mod. R

Material: stainless steel 316

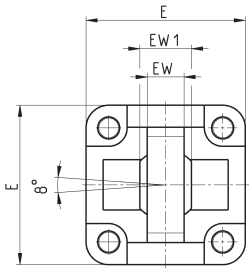

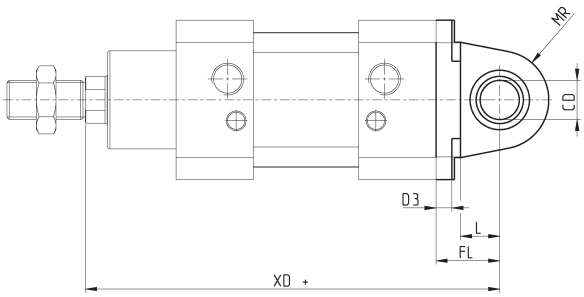

Supplied with:
1x male trunnion bracket
4x screws

+ = add the stroke

DIMENSIONS										
Mod.	Ø	EW	EW1	CD	E	FL	L	MR	XD	D3
R-90-32	32	10.5	14	10	45	22	12	15	142	5.5
R-90-40	40	12	16	12	55	25	15	18	161	5.5
R-90-50	50	15	21	16	65	27	17	20	170	6.5
R-90-63	63	15	21	16	75	32	20	23	185	6.5
R-90-80	80	18	25	20	95	36	22	27	210	10
R-90-100	100	18	25	20	115	41	25	30	230	10
R-90-125	125	25	37	30	140	50	30	40	275	10

90° male trunnion bracket with swivel ball joint Mod. ZCR

Material: stainless steel 316

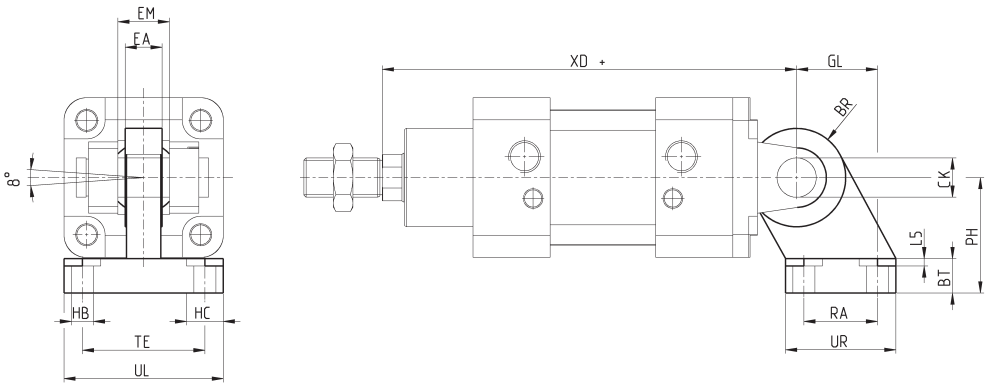

Supplied with:
1x male trunnion bracket
4x screws

+ = add the stroke

DIMENSIONS																
Mod.	Ø	UL	TE	EA	EM	XD	GL	BR	CK	PH	L5	BT	HB	RA	UR	HC
ZCR-90-32	32	51	38	10.5	14	142	21	15	10	32	1.5	10	6.6	18	31	11
ZCR-90-40	40	54	41	12	16	160	24	18	12	36	1.5	10	6.6	22	35	11
ZCR-90-50	50	65	50	15	21	170	33	20	16	45	1.5	12	9	30	45	15
ZCR-90-63	63	67	52	15	21	190	37	23	16	50	1.5	12	9	35	50	15
ZCR-90-80	80	86	66	18	25	210	47	27	20	63	2.5	14	11	40	60	18
ZCR-90-100	100	96	76	18	25	230	55	30	20	71	2.5	15	11	50	70	18
ZCR-90-125	125	124	94	25	37	275	70	40	30	90	3	20	13.5	60	90	20

90° male trunnion Mod. ZC

Material: stainless steel 316

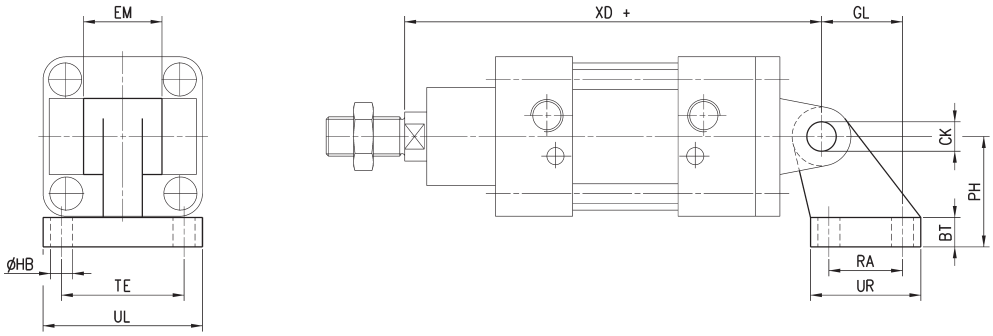

Supplied with:
1x male support

+ = add the stroke

DIMENSIONS											
Mod.	Ø	BT	CK	EM	GL	ØHB	PH	RA	TE	UL	UR	XD+
ZC-90-32	32	8	10	26	21	6,6	32	18	38	51	31	142
ZC-90-40	40	10	12	28	24	6,6	36	22	41	54	35	161
ZC-90-50	50	12	12	32	33	9	45	30	50	65	45	170
ZC-90-63	63	12	16	40	37	9	50	35	52	67	50	185
ZC-90-80	80	14	16	50	47	11	63	40	66	86	60	210
ZC-90-100	100	15	20	60	55	11	71	50	76	96	70	230
ZC-90-125	125	20	25	70	70	14	90	60	94	124	90	275

Rod fork end Mod. G-90

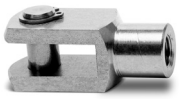

Material: stainless steel 303
ISO 8140

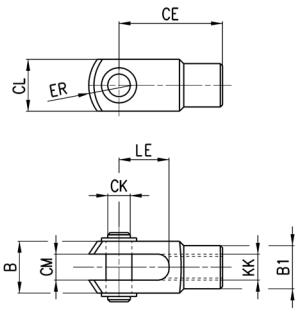

DIMENSIONS										
Mod.	Ø	ØCK	LE	CM	CL	ER	CE	KK	B	ØB1
G-90-25-32	32	10	20	10	20	12	40	M10x1,25	26	18
G-90-40	40	12	24	12	24	14	48	M12x1,25	31	20
G-90-50-63	50-63	16	32	16	32	19	64	M16x1,5	39	26
G-90-80-100	80-100	20	40	20	40	25	80	M20x1,5	50	34
G-90-125	125	30	54	30	55	38	110	M27x2	67	48

Clevis pin Mod. S-90

Material: stainless steel 303

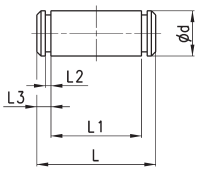

DIMENSIONS						
Mod.	Ø	Ød	L	L1	L2	L3
S-90-32	32	10	53	46	1,1	3
S-90-40	40	12	60	53	1,1	3
S-90-50	50	12	68	61	1,1	3
S-90-63	63	16	78	71	1,1	3
S-90-80	80	16	98	91	1,1	3
S-90-100	100	20	118	111	1,3	5
S-90-125	125	25	139	132	1,3	4,2

Antirotating clevis pin Mod. SR-90

Supplied with:
1x antirotating clevis pin
(stainless steel 316)
1x seeger (steel)

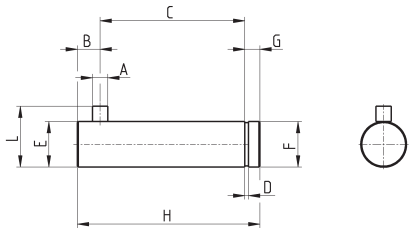

DIMENSIONS										
Mod.	Ø	A	B	C	D	E	F	G	H	L
SR-90-32	32	3	4.5	32.5	1.1	10	9.6	4	41	14
SR-90-40	40	4	6	38	1.1	12	11.5	4	48	46
SR-90-50	50	4	6	43	1.1	16	15.2	5	54	20
SR-90-63	63	4	6	49	1.1	16	15.2	5	60	20

Swivel ball joint Mod. GA-90

ISO 8139

Materials:
- stainless steel 304 bracket
- stainless steel 420 spherical ring
- sintered bronze bushing

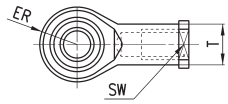

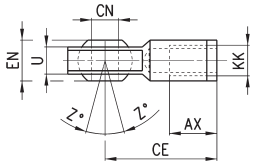

DIMENSIONS											
Mod.	Ø	ØCN	U	EN	ER	AX	CE	KK	ØT	Z	SW
GA-90-32	32	10	10,5	14	14	20	43	M10x1,25	15	6,5	17
GA-90-40	40	12	12	16	16	22	50	M12x1,25	17,5	6,5	19
GA-90-50-63	50-63	16	15	21	21	28	64	M16x1,5	22	7,5	22
GA-90-80-100	80-100	20	18	25	21	33	77	M20x1,5	27,5	7	30
GA-90-125	125	30	25	35	35	51	110	M27x2	40	7,5	41

Piston rod lock nut Mod. U-90

ISO 4035
Material: stainless steel 304

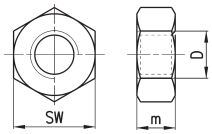

DIMENSIONS				
Mod.	Ø	D	m	SW
U-90-25-32	32	M10x1,25	6	17
U-90-40	40	M12x1,25	7	19
U-90-50-63	50-63	M16x1,5	8	24
U-90-80-100	80-100	M20x1,5	9	30
U-90-125	125	M27x2	12	41

Series 94 and 95 stainless steel mini-cylinders

Single-acting and double-acting, magnetic
Series 94: ø 16, 20, 25 mm
Series 95: ø 25 mm, cushioned

- » In compliance with ISO 6432
- » Clean design
- » Stainless steel AISI 316

The Series 94 and 95 cylinders can be used in critical applications in which a high corrosion resistance is required (for example off-shore, marine, food).

Their construction enables the replacement of all seals.
Series 95 is normally equipped with adjustable end-stroke cushioning by means of a screw on the end block.
In addition both Series 94 and 95 are equipped with a mechanical cushionaing in order to make the impact of the piston less noisy as it reaches the end of the stroke.

GENERAL DATA

Construction	end blocks secured to the tube
Operation	single-acting and double-acting
Design	ISO 6432
Materials	end caps, rod and tube in stainless steel AISI 316, seals in NBR, plastic guiding element, NSF H1-certified lubricant
Mounting	several types of cylinders clamps available
Strokes min - max	10 ÷ 500 mm
Operating temperature	0° - 80°C (with dry air -20°C)
Operating pressure	1 ÷ 10 bar
Speed	10 ÷ 1000 mm/sec (without load)
Fluid	clean air, without lubrication. If lubricated air is used, it is recommended to use oil ISOVG32. Once applied the lubrication should never be interrupted.

STANDARD STROKES FOR MINICYLINDERS SERIES 94 AND 95

● = single-acting
✖ = double-acting

STANDARD STROKES														
Ø	10	25	40	50	80	100	125	160	200	250	300	320	400	500
94 16	● ✖	● ✖	● ✖	● ✖	✖	✖	✖	✖	✖					
94 20	● ✖	● ✖	● ✖	● ✖	✖	✖	✖	✖	✖	✖	✖			
94 25	● ✖	● ✖	● ✖	● ✖	✖	✖	✖	✖	✖	✖	✖	✖	✖	✖
95 25	✖	✖	✖	✖	✖	✖	✖	✖	✖	✖	✖	✖	✖	✖

CODING EXAMPLE

94	N	2	A	16	A	100	

94	SERIES 94 = magnetic 95 = magnetic, cushioned	
N	VERSION N = standard	
2	OPERATION 1 = single-acting, front spring 2 = double-acting 3 = double-acting, through-rod	PNEUMATIC SYMBOLS CS06 (S. 94) CD08 (S. 94) - CD09 (S. 95) CD12 (S. 94) - CD13 (S. 95)
A	MATERIALS A = stainless steel, seals in NBR V = stainless steel, all seals in FKM (150°C)	
16	BORE 16 = 16 mm - 20 = 20 mm - 25 = 25 mm	
A	TYPE OF DESIGN A = standard with locking ring for end cap Mod. V and piston rod lock nut Mod. U	
100	STROKE (see the table)	
	= standard V = rod seal in FKM	

PNEUMATIC SYMBOLS

The pneumatic symbols which have been indicated in the CODING EXAMPLE are shown below.

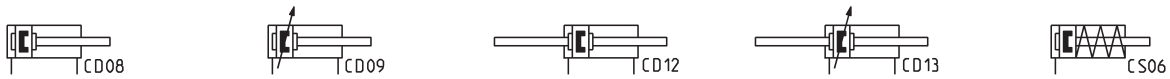

ACCESSORIES FOR STAINLESS STEEL MINICYLINDERS SERIES 94 AND 95

Foot mount Mod. B

Flange bracket Mod. E

Trunnion bracket Mod. I

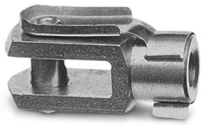

Rod fork end
Mod. G-94/90

Swivel ball joint
Mod.GA-94/90

Piston rod lock nut
Mod. U-94/90

Nose nut Mod. V-94 and
Mod. U-90

All accessories are supplied separately, except for piston rod lock nut Mod. U

Cylinders Series 94 and 95

With threaded front and rear end blocks

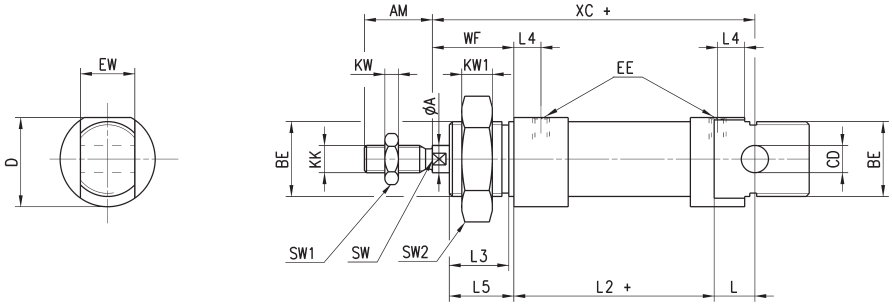

+ = add the stroke

DIMENSIONS																					
Mod.	Ø	A	AM	BE	CD	D	EE	EW	KK	KW	KW1	L	L2	L3	L4	L5	SW	SW1	SW2	WF	XC
94	16	6	16	M16x1.5	6	21.2	M5	12	M6	4	5	9	51	14	5.5	15	5	10	24	22	82
94	20	8	20	M22x1.5	8	26.2	G1/8	16	M8	5	5	12	59	17.5	8	19	7	13	32	24	95
94-95	25	10	22	M22x1.5	8	32.5	G1/8	16	M10x1.25	6	5	12	64	18.5	7.5	20	8	17	32	28	104

Cylinders Series 94 and 95 - through-rod

With threaded end blocks

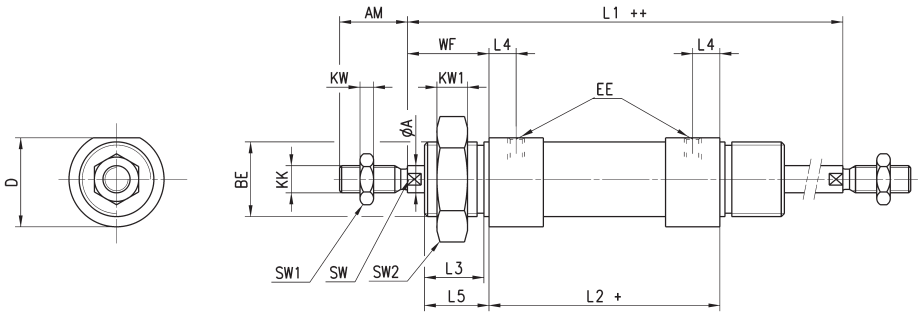

+ = add the stroke once
++ = add the stroke twice

DIMENSIONS																		
Mod.	Ø	A	AM	BE	D	EE	KK	KW	KW1	L1	L2	L3	L4	L5	SW	SW1	SW2	WF
94	16	6	16	M16x1.5	21.2	M5	M6	4	5	100	56	14	5.5	15	5	10	24	22
94	20	8	20	M22x1.5	26.2	G1/8	M8	5	5	116	68	17.5	8	19	7	13	32	24
94-95	25	10	22	M22x1.5	32.5	G1/8	M10x1.25	6	5	125	69	18.5	7.5	20	8	17	32	28

Foot mount Mod. B

Material: stainless steel 304

Supplied with:
2x feet
1x nut

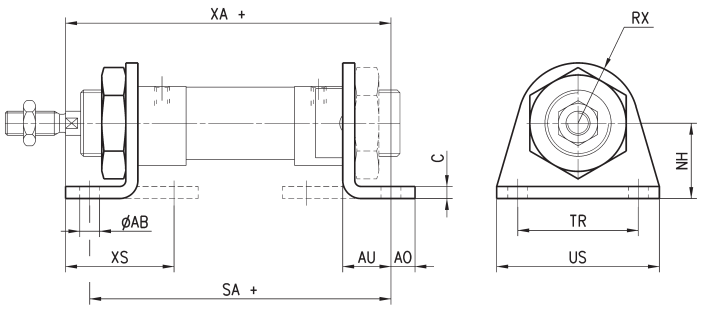

+ = add the stroke

DIMENSIONS												
Mod.	Ø	ØAB	XS	XA+	SA+	AO	AU	C	RX	TR	US	NH
B-94-12-16	16	5,5	32	91	82	6	13	3	13	32	42	20
B-94-20-25	20	6,6	36	108	100	8	16	4	20	40	54	25
B-94-20-25	25	6,6	40	113	101	8	16	4	20	40	54	25

Flange bracket Mod. E

Material: stainless steel 304

Supplied with:
1x flange

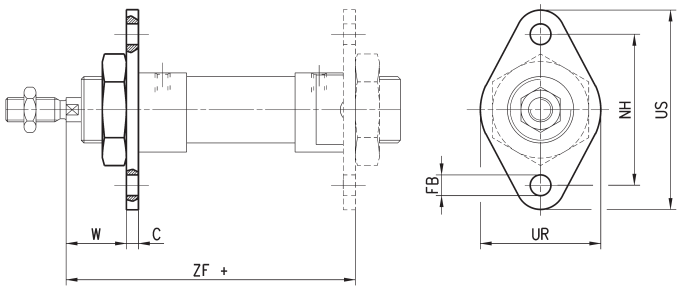

+ = add the stroke

DIMENSIONS								
Mod.	Ø	W	C	ZF+	FB	UR	TF	UF
E-94-12-16	16	19	3	81	5,5	30	40	53
E-94-20-25	20	20	4	96	6,6	40	50	66
E-94-20-25	25	24	4	101	6,6	40	50	66

Trunnion Bracket Mod. I

Material: stainless steel 304

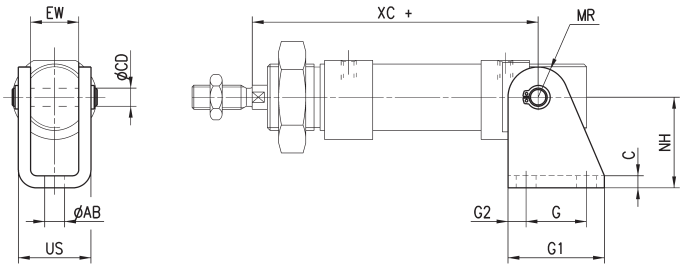

DIMENSIONS												
Mod.	Ø	AB	C	CD	EW	G	G1	G2	MR	NH	US	XC+
I-94-12-16	16	5,5	3	6	12	15	25	5	7	27	18,1	82
I-94-20-25	20	6,6	4	8	16	20	32	6	10	30	24,1	95
I-94-20-25	25	6,6	4	8	16	20	32	6	10	30	24,1	104

Rod Fork End Mod. G-94/90

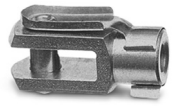

ISO 8140
Material: stainless steel 303

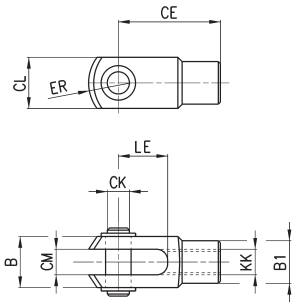

DIMENSIONS										
Mod.	Ø	CK	LE	KK	CM	ER	CE	CL	B	B1
G-94-12-16	16	6	12	M6x1	6	7	24	12	16	10
G-94-20	20	8	16	M8x1,25	8	10	32	16	22	14
G-90-25-32	25	10	20	M10x1,25	10	12	40	20	26	18

Swivel Ball Joint Mod. GA-94/90

ISO 8139

Materials:
- stainless steel 304 bracket
- stainless steel 420 spherical ring
- sintered bronze bushing

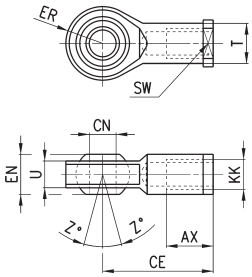

DIMENSIONS											
Mod.	Ø	CN	U	EN	ER	AX	CE	KK	T	Z	SW
GA-94-12-16	16	6	7	9	10	12	30	M6x1	10	6,5	11
GA-94-20	20	8	9	12	12	16	36	M8x1,25	12,5	6,5	14
GA-90-32	25	10	10,5	14	14	20	43	M10x1,25	15	6,5	17

Piston Rod Lock Nut Mod. U-94/90

ISO 4035
Material: stainless steel 304

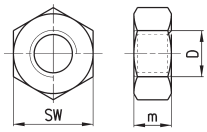

DIMENSIONS				
Mod.	Ø	D	m	SW
U-94-12-16	16	M6x1	4	10
U-94-20	20	M8x1,25	5	13
U-90-25-32	25	M10x1,25	6	17

Nose Nut Mod. V-94 and Mod. U-90

ISO 4035
Material: stainless steel 304

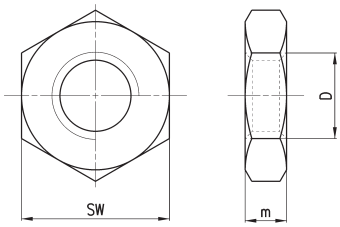

DIMENSIONS				
Mod.	Ø	D	m	SW
U-90-50-63	16	M16x1,5	8	24
V-94-20-25	20-25	M22x1,5	10	32

Series 97 stainless steel cylinders

Single- and double-acting, cushioned, magnetic. ø 32, 40, 50, 63 mm

- Clean design
- Stainless steel AISI 304
- Adjustable endstroke cushioning

Series 97 stainless steel cylinders can be used in critical applications where a high level of corrosion resistance is required (for example: off-shore, naval, food industries).

These cylinders are normally equipped with end-stroke cushioning which can be adjusted through a screw on the end block.
In order to quieten the impact of the piston on the end block, these cylinders are also equipped with mechanical cushioning.

GENERAL DATA

Type of construction	the end blocks are screwed to the tube with an intermediate Teflon ring
Operation	single-acting and double-acting
Materials	end blocks, tube, rod in stainless steel AISI 304 rod seals in PU, piston seals in NBR plastic guiding element, NSF H1-certified lubricant
Type of mounting	threaded front and rear locking ring pins on front cap ends rear male hinge articulated rear male hinge rear female hinge
Stroke min-max	25 ÷ 800 mm
Operating temperature	0°C ÷ 80°C (with dry air - 20°C)
Operating pressure	1 ÷ 10 bar
Speed	10 ÷ 1000 mm/sec (without load)
Fluid	Filtered air, without lubrication. If lubricated air is used, it is recommended to use oil ISOVG32. Once applied the lubrication should never be interrupted.

STANDARD STROKES FOR CYLINDERS SERIES 97

● = Single-acting
✖ = Double-acting

STANDARD STROKES														
Ø	25	50	75	80	100	125	150	160	200	250	300	320	400	500
32	✖ ●	✖ ●	✖	✖	✖	✖	✖	✖	✖	✖	✖	✖	✖	✖
40	✖ ●	✖ ●	✖	✖	✖	✖	✖	✖	✖	✖	✖	✖	✖	✖
50	✖ ●	✖ ●	✖	✖	✖	✖	✖	✖	✖	✖	✖	✖	✖	✖
63	✖ ●	✖ ●	✖	✖	✖	✖	✖	✖	✖	✖	✖	✖	✖	✖

CODING EXAMPLE

97	M	2	A	050	A	0200	

97	SERIES	
M	VERSIONS: M = rear male hinge S = articulated rear male hinge F = rear female hinge T = front and rear threaded end blocks A = front end block with pin	
2	OPERATION: 1 = single-acting, front spring 2 = double-acting, front and rear cushions 6 = double-acting, through-rod, front and rear cushions (T and A versions only)	PNEUMATIC SYMBOLS: CS06 CD09 CD13
A	MATERIALS: A = stainless steel AISI 304 - PU seals V = stainless steel AISI 304 - FKM seals (150°C)	
050	BORE: 032 = 32 mm - 040 = 40 mm - 050 = 50 mm - 063 = 63 mm	
A	TYPE OF DESIGN: A = standard (locking ring for end cap V + lock nut for rod U)	
0200	STROKE (see the table)	
	= standard V = rod seal in FKM	

PNEUMATIC SYMBOLS

The pneumatic symbols which have been indicated in the CODING EXAMPLE are shown below.

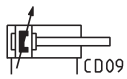

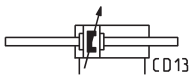

ACCESSORIES FOR STAINLESS STEEL CYLINDERS SERIES 97

Foot mount Mod. B

Trunnion bracket Mod. I

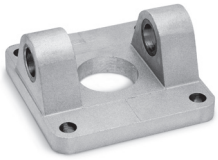

Rear female trunnion bracket Mod. C-H

Tight rear female tr. bracket Mod. CR

Male tr. bracket with swivel ball joint Mod. R

90° male tr. bracket + sw. ball joint Mod. ZCR

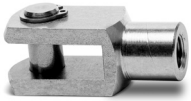

Rod fork end Mod. G-90

Swivel ball joint Mod. GA-90

Piston rod lock nut Mod. U-90

Nose nut Mod. V-97

Clevis pin Mod. S-90

Anti-rotation clevis pin Mod. SR-90

All accessories are supplied separately, except for piston rod lock nut Mod. U and nose nut Mod. V.

Cylinders Series 97, Mod. T

With threaded front and rear end blocks

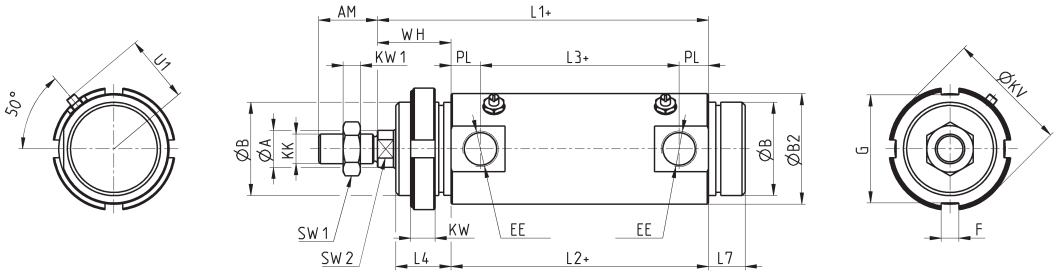

+ = add the stroke

DIMENSIONS																					
Ø	ØA	AM	ØB	ØB2	EE	F	G	KK	PL	SW1	KW1	SW2	U1	WH	L1+	L2+	L3+	L4	L7	KW	ØKV
32	12	22	M30x1.5	36	G1/8	5	38	M10x1.25	9	17	6	10	23	26	120	94	76	19.5	15	7	42
40	16	24	M38x1.5	45	G1/4	6	50	M12x1.25	12	19	7	13	27	30	135	105	81	22.5	15	8	55
50	20	32	M45x1.5	55	G1/4	6	53	M16x1.5	12	24	8	17	33	37	143	106	82	28	18	10	60
63	20	32	M45x1.5	68	G3/8	6	53	M16x1.5	13	24	8	17	40	37	158	121	95	28	18	10	60

Cylinders Series 97, Mod. T - through-rod

With threaded end blocks

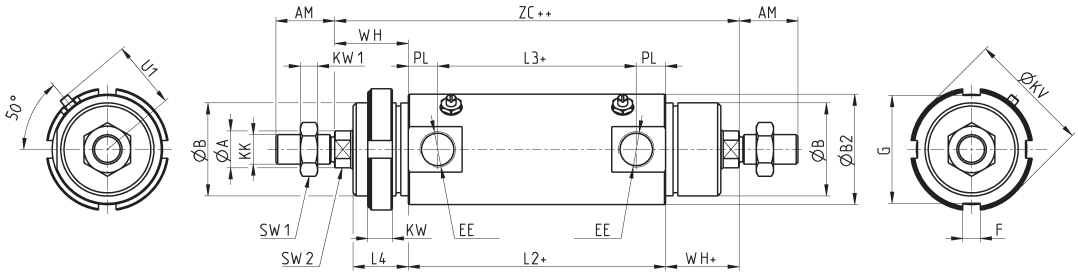

+ = add the stroke once
++ = add the stroke twice

DIMENSIONS																					
Ø	ØA	AM	ØB	ØB2	EE	F	G	KK	PL	SW1	KW1	SW2	U1	WH+	L2+	L3+	L4	KW	ØKV	ZC++
32	12	22	M30x1.5	36	G1/8	5	38	M10x1.25	9	17	6	10	23	26	94	76	19.5	7	42	146
40	16	24	M38x1.5	45	G1/4	6	50	M12x1.25	12	19	7	13	27	30	105	81	22.5	8	55	165
50	20	32	M45x1.5	55	G1/4	6	53	M16x1.5	12	24	8	17	33	37	106	82	28	10	60	180
63	20	32	M45x1.5	68	G3/8	6	53	M16x1.5	13	24	8	17	40	37	121	95	28	10	60	195

Cylinders Series 97, Mod. M

With rear male trunnion bracket

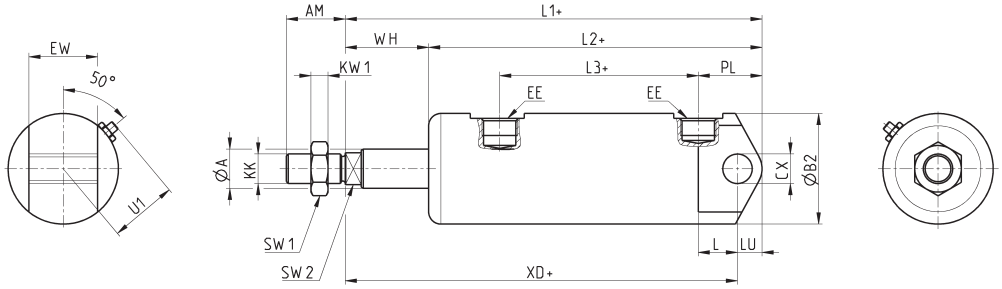

+ = add the stroke

DIMENSIONS																			
Ø	ØA	AM	ØB2	CX	EE	EW	KK	PL	SW1	KW1	SW2	U1	WH	L1+	L2+	L3+	L	LU	XD+
32	12	22	36	10	G1/8	26	M10x1.25	23	17	6	10	23	26	151	125	76	13	9	142
40	16	24	45	12	G1/4	28	M12x1.25	26	19	7	13	27	34	170	136	81	16	10	160
50	20	32	55	12	G1/4	32	M16x1.5	32	24	8	17	33	37	182	145	82	16.5	12	170
63	20	32	68	16	G3/8	40	M16x1.5	29.5	24	8	17	40	50	202	152	95	21	12	190

Cylinders Series 97, Mod. S

With articulated rear male trunnion bracket

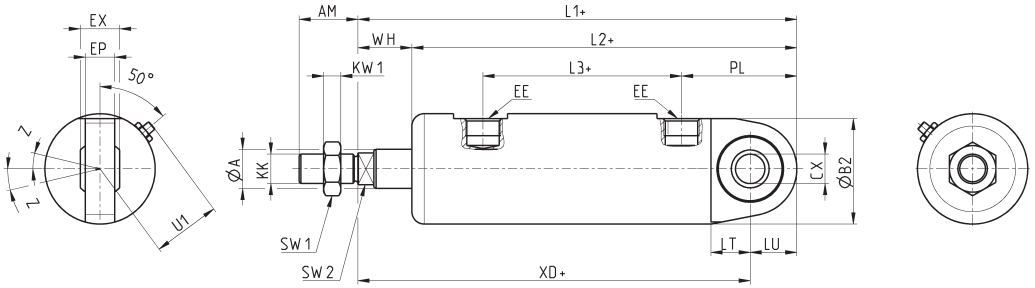

+ = add the stroke

DIMENSIONS																					
Ø	ØA	AM	ØB2	CX	EE	EP	EX	KK	PL	SW1	KW1	SW2	U1	WH	L1+	L2+	L3+	LT	LU	XD+	Z
32	12	22	36	10	G1/8	10.5	14	M10x1.25	37	17	6	10	23	18	157	139	76	13	15	142	13
40	16	24	45	12	G1/4	12	16	M12x1.25	47	19	7	13	27	22	179	157	81	16	19	160	13
50	20	32	55	16	G1/4	15	21	M16x1.5	49	24	8	17	33	28.5	190.5	162	82	16.5	20.5	170	15
63	20	32	68	16	G3/8	15	21	M16x1.5	60	24	8	17	40	31.5	214	182.5	95	21	24	190	15

Cylinders Series 97, Mod. F

With rear female trunnion bracket

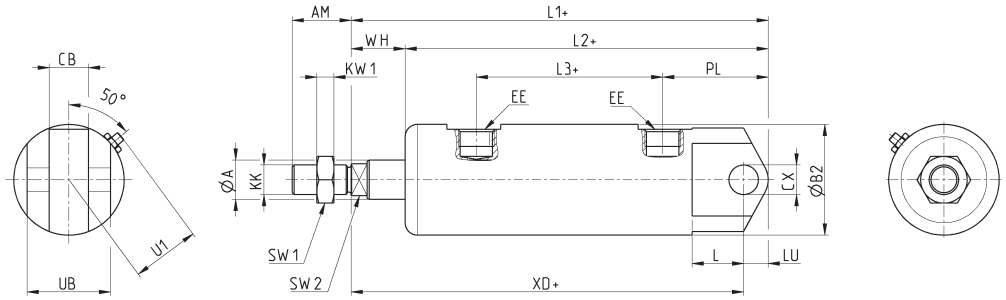

+ = add the stroke

DIMENSIONS																				
Ø	ØA	AM	ØB2	CB	CX	EE	KK	PL	SW1	KW1	SW2	U1	WH	L1+	L2+	L3+	L	LU	XD+	UB
32	12	22	36	14	10	G1/8	M10x1.25	31	17	6	10	23	18	151	133	76	13	9	142	34
40	16	24	45	16	12	G1/4	M12x1.25	38	19	7	13	27	22	170	148	81	16	10	160	40
50	20	32	55	21	16	G1/4	M16x1.5	45.5	24	8	17	33	28.5	182	153.5	82	21	12	170	45
63	20	32	68	21	16	G3/8	M16x1.5	48	24	8	17	40	31.5	202	170.5	95	21	12	190	51

Cylinders Series 97, Mod. A

With front end block with pins

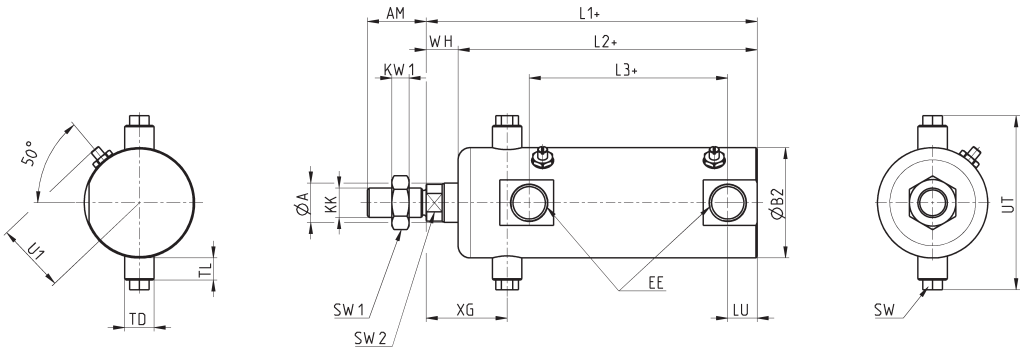

+ = add the stroke

DIMENSIONS																		
Ø	ØA	AM	ØB2	EE	KK	SW	SW1	KW1	SW2	U1	WH	L1+	L2+	L3+	LU	XG	TD	TL	UT
32	12	22	36	G1/8	M10x1.25	8	17	6	10	23	9	120	111	76	9	27	10	7	58
40	16	24	45	G1/4	M12x1.25	8	19	7	13	27	13	135	122	81	12	33	12	9	71
50	20	32	55	G1/4	M16x1.5	8	24	8	17	33	18	143	125	82	12	40	14	9	81
63	20	32	68	G3/8	M16x1.5	12	24	8	17	40	22.5	158	135.5	95	13	45	16	12	104

Foot mount Mod. B

Material: stainless steel 304

Supplied with:
1x nut
2x single feet

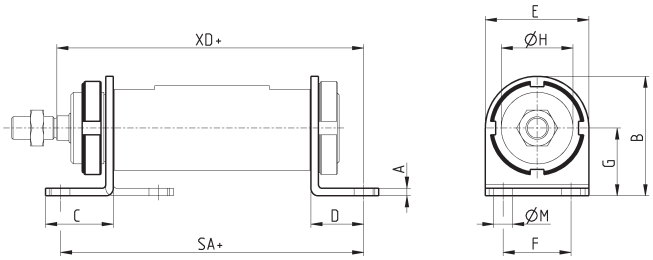

+ = add the stroke

DIMENSIONS												
Mod.	Ø	A	B	C	D	E	SA+	F	G	ØH	ØM	XD+
B-97-32	32	4	53	35	24	42	142	32	32	30	7	142
B-97-40	40	4	63.5	36	28	55	161	36	36	38	10	160
B-97-50	50	5	77.5	47	32	65	170	45	45	45	10	170
B-97-63	63	5	82.5	45	32	65	185	50	50	45	10	190

Trunnion bracket Mod. I

Material: stainless steel 304

Supplied with:
1x female trunnion
2x cartridges

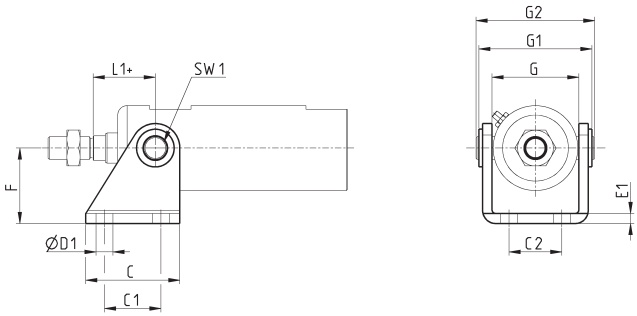

+ = add the stroke

DIMENSIONS												
Mod.	Ø	C	C1	C2	ØD1	E1	F	G	G1	G2	L1+	SW1
I-97-32	32	40	24	20	7	4	35	38	50	58	27	8
I-97-40	40	50	30	28	9	5	40	46	60	71	33	8
I-97-50	50	54	34	36	9	6	45	57	74	81	40	8
I-97-63	63	65	35	43	9	6	50	70	88	104	45	12

Rear female trunnion bracket Mod. C-H

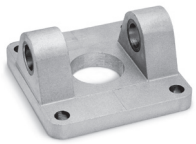

Material: stainless steel 316

Supplied with:
1x female trunnion bracket
4x screws

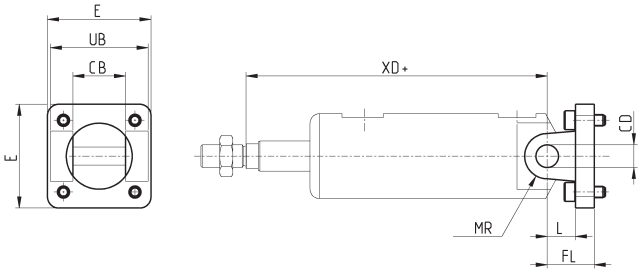

+ = add the stroke

DIMENSIONS									
Mod.	Ø	CB	CD	E	FL	L	MR	UB	XD+
C-H-90-32	32	26	10	45	22	12	10	45	142
C-H-90-40	40	28	12	55	25	15	12	52	160
C-H-90-50	50	32	12	65	27	17	12	60	170
C-H-90-63	63	40	16	75	32	20	16	70	190

Tight rear female trunnion bracket Mod. CR

Material: stainless steel 316

Supplied with:
1x female trunnion bracket
4x screws

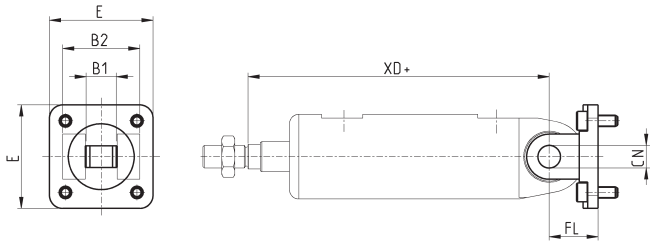

+ = add the stroke

DIMENSIONS							
Mod.	Ø	B1	B2	E	CN	FL	XD+
CR-90-32	32	14	34	45	10	22	142
CR-90-40	40	16	40	55	12	25	160
CR-90-50	50	21	45	65	16	27	170
CR-90-63	63	21	51	75	16	32	190

Male trunnion bracket with swivel ball joint Mod. R

Material: stainless steel 316

Supplied with:
1x male trunnion bracket
4x screws

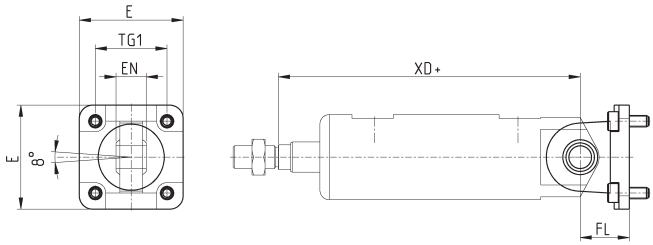

+ = add the stroke

DIMENSIONS						
Mod.	Ø	E	EN	FL	TG1	XD+
R-90-32	32	45	14	22	32.5	142
R-90-40	40	55	16	25	38	160
R-90-50	50	65	21	27	46.5	170
R-90-63	63	75	21	32	56.5	190

90° male trunnion bracket with swivel ball joint Mod. ZCR

Material: stainless steel 316

Supplied with:
1x male trunnion bracket
4x screws

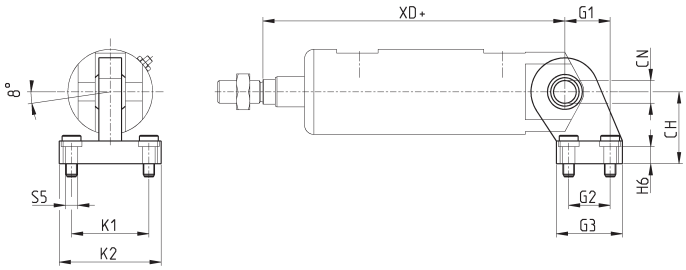

+ = add the stroke

DIMENSIONS											
Mod.	Ø	CH	CN	G1	G2	G3	H6	K1	K2	S5	XD+
ZCR-90-32	32	32	10	21	18	31	10	38	51	6.6	142
ZCR-90-40	40	36	12	24	22	35	10	41	54	6.6	160
ZCR-90-50	50	45	16	33	30	45	12	50	65	9	170
ZCR-90-63	63	50	16	37	35	50	12	52	67	14	190

Rod fork end Mod. G-90

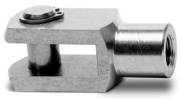

ISO 8140
Material: stainless steel 303

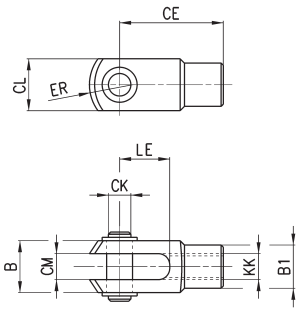

DIMENSIONS										
Mod.	Ø	ØCK	LE	CM	CL	ER	CE	KK	B	ØB1
G-90-25-32	32	10	20	10	20	12	40	M10x1.25	26	18
G-90-40	40	12	24	12	24	14	48	M12x1.25	31	20
G-90-50-63	50-63	16	32	16	32	19	64	M16x1.5	39	26

Swivel ball joint Mod. GA-90

ISO 8139

Materials:
- stainless steel 304 bracket
- stainless steel 420 spherical ring
- sintered bronze bushing

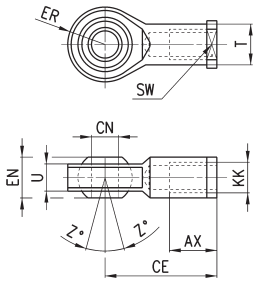

DIMENSIONS											
Mod.	Ø	ØCN	U	EN	ER	AX	CE	KK	ØT	Z	SW
GA-90-32	32	10	10.5	14	14	20	43	M10x1.25	15	6.5	17
GA-90-40	40	12	12	16	16	22	50	M12x1.25	17.5	6.5	19
GA-90-50-63	50-63	16	15	21	21	28	64	M16x1.5	22	7.5	22

Piston rod lock nut Mod. U-90

ISO 4035
Material: stainless steel 304

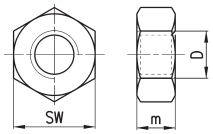

DIMENSIONS				
Mod.	Ø	D	m	SW
U-90-25-32	32	M10x1.25	6	17
U-90-40	40	M12x1.25	7	19
U-90-63	50-63	M16x1.5	8	24

Nose nut Mod. V-97

Material: stainless steel 304

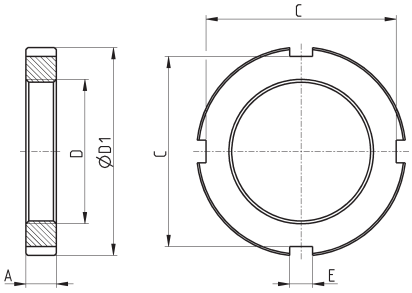

DIMENSIONS						
Mod.	Ø	A	D	ØD1	E	C
V-97-32	32	7	M30x1.5	42	5	38
V-97-40	40	8	M38x1.5	55	6	50
V-97-50-63	50-63	10	M45x1.5	60	6	53

Clevis pin Mod. S-90

Supplied with:
1x clevis pin in stainless steel 303
2x seeger in steel

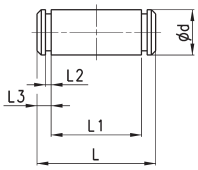

DIMENSIONS						
Mod.	Ø	Ød	L	L1	L2	L3
S-90-32	32	10	53	46	1.1	3
S-90-40	40	12	60	53	1.1	3
S-90-50	50	12	68	61	1.1	3
S-90-63	63	16	78	71	1.1	3

Clevis pin Mod. S-97

Supplied with:
1x clevis pin in stainless steel 303
2x cotter pin in steel

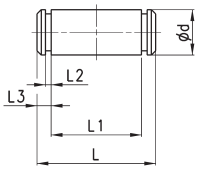

DIMENSIONS						
Mod.	Ø	Ød	L	L1	L2	L3
S-90-32	32	10	53	46	1.1	3
S-90-40	40	12	60	53	1.1	3
S-90-50	50	12	68	61	1.1	3
S-90-63	63	16	78	71	1.1	3

Antirotating clevis pin Mod. SR-90

Supplied with:
1x antirotating clevis pin
in stainless steel 316
1x seeger in steel

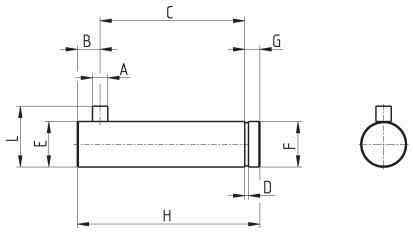

DIMENSIONS										
Mod.	Ø	A	B	C	D	E	F	G	H	L
SR-90-32	32	3	4.5	32.5	1.1	10	9.6	4	41	14
SR-90-40	40	4	6	38	1.1	12	11.5	4	48	16
SR-90-50	50	4	6	43	1.1	16	15.2	5	54	20
SR-90-63	63	4	6	49	1.1	16	15.2	5	60	20

Series QC cylinders with integrated guide

Double-acting, magnetic piston, guided ø 20, 25, 32, 40, 50, 63 mm

- Magnetic sensors can be mounted on both sides
- QCT: bronze bushings version
- QCB: ball bearing guide version
- Movement and guidance in one unit

These actuators, suitable for use in very limited space, are available in two versions.
QCT version: with sintered bronze bushes, suitable when the side loads applied to the cylinder are high.
QCB version: with linear ball bearings, suitable for high precision and fast cycling applications.

Both versions are equipped with fixed cushioning to prevent direct impact with the end covers. The design of the cylinder body allows the mounting of the cylinder using either top, bottom or side faces. Several "T" shaped grooves in two faces allow sensors to be fitted in a number of positions.
Out of standard strokes are available on demand only.

GENERAL DATA

Type of construction	compact guided QCT = sintered bronze bushes QCB = linear ball bearings
Operation	double-acting
Materials	body = anodized AL flange = zinc-plated steel piston rod = rolled stainless steel AISI 303 QCT columns = rolled stainless steel 420B QCB columns = hardened steel C50 seals = PU
Mounting	threaded and non-threaded holes in the body
Strokes min. max	see table
Operating temperature	0°C ÷ 80°C (with dry air - 20°C)
Speed	50 ÷ 500 mm/s
Operating pressure	1 ÷ 10 bar
Fluid	clean air, non lubricated. If lubricated air is used, it is recommended to use oil ISOVG32. Once applied the lubrication should never be interrupted.

STANDARD STROKES FOR DOUBLE-ACTING CYLINDERS SERIES QC

■ = Double-acting
Out of standard intermediate strokes available on request (strokes multiple of 5 mm)

STANDARD STROKES											
Ø	20	25	30	40	50	75	100	125	150	175	200
20	■		■	■	■	■	■	■	■	■	■
25	■		■	■	■	■	■	■	■	■	■
32		■			■	■	■	■	■	■	■
40		■			■	■	■	■	■	■	■
50		■			■	■	■	■	■	■	■
63		■			■	■	■	■	■	■	■

CODING EXAMPLE

QC	T	2	A	020	A	050

QC	SERIES	
T	VERSION: T = sintered bronze bushes B = linear ball bearings	
2	OPERATION: 2 = double-acting	PNEUMATIC SYMBOLS CD07
A	MATERIALS: A = anodized aluminium body - rolled stainless steel AISI 303 piston rod rolled stainless steel AISI 420B columns for QCT - hardened steel C50 columns for QCB	
020	BORE: 020 = 20 mm - 025 = 25 mm - 032 = 32 mm - 040 = 40 mm - 050 = 50 mm - 063 = 63 mm	
A	TYPE OF DESIGN: A = standard	
050	STROKE (see the table)	

PNEUMATIC SYMBOLS

The pneumatic symbols which have been indicated in the CODING EXAMPLE are shown below.

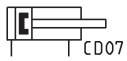

TABLE OF PERMISSABLE LOADS (F)

For sintered bronze bushes
QCT version
For linear ball bearings
QCB version

F (N) 1N = 0.102 kgf
Ex.: QCT2A025A020 = F = 140N

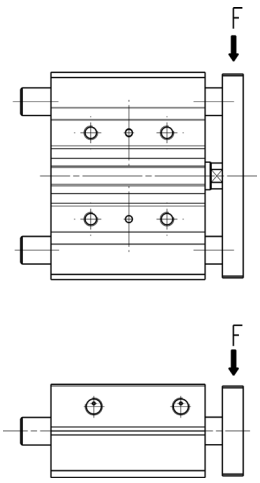

STROKE												
Ø	Mod	20	25	30	40	50	75	100	125	150	175	200
20	QCT	100	-	93	81	73	114	93	98	85	75	67
25	QCT	140	-	120	115	103	165	135	150	131	116	104
32	QCT	-	253	-	-	214	225	208	225	198	176	159
40	QCT	-	251	-	-	197	215	206	224	196	175	157
50	QCT	-	317	-	-	273	267	299	257	225	200	179
63	QCT	-	316	-	-	273	267	299	257	225	200	179
20	QCB	110	-	100	125	121	90	86	69	58	49	43
25	QCB	142	-	85	154	148	106	82	97	81	70	61
32	QCB	-	222	-	-	91	167	129	145	122	104	90
40	QCB	-	221	-	-	93	167	128	145	121	104	90
50	QCB	-	203	-	-	152	161	193	156	130	110	95
63	QCB	-	201	-	-	151	158	195	157	130	110	94

TABLE OF PERMISSABLE MOMENTS (M)

For sintered bronze bushes
QCT version
For linear ball bearings
QCB version

M (N*m) 1N*m = 0,102 kgf *m
Ex.: QCT2A025A020 = M = 3,4 Nm

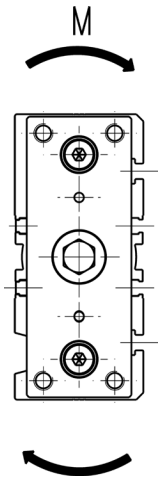

STROKE												
Ø	Mod	20	25	30	40	50	75	100	125	150	175	200
20	QCT	1,7	-	1,5	1,2	1,0	2,9	2,8	2,6	2,3	2,0	1,8
25	QCT	3,4	-	2,9	3,6	3,3	4,2	4,3	3,8	3,2	2,7	2,3
32	QCT	-	6,7	-	-	6,5	7,2	7,0	6,6	5,6	4,8	4,1
40	QCT	-	8,7	-	-	7,3	9,2	8,8	9,6	8,4	7,5	6,7
50	QCT	-	15,4	-	-	12,9	12,6	13,4	12,1	11,3	10,7	8,8
63	QCT	-	15,1	-	-	14,3	16,6	17	14	11,3	9,7	9,1
20	QCB	3,0	-	2,7	3,4	3,3	2,4	2,3	1,9	1,6	1,3	1,2
25	QCB	3,5	-	2,7	4,9	4,7	3,4	2,6	3,1	2,6	2,2	2,0
32	QCB	-	6,3	-	-	3,6	6,5	5,1	5,7	4,8	4,1	3,5
40	QCB	-	8,5	-	-	4,0	7,2	5,5	6,2	5,2	4,5	3,9
50	QCB	-	11,1	-	-	8,3	8,8	10,6	8,6	7,1	6,0	5,2
63	QCB	-	8,3	-	-	7,2	9,8	12,1	9,7	8,1	6,8	5,8

Cylinders Series QC

Note: for out of standard intermediate strokes (ex. stroke 35), consider the immediately higher stroke dimensions (ex. stroke 40).

For ØC, B, L3 dimensions, see the following page.

+ = add the stroke

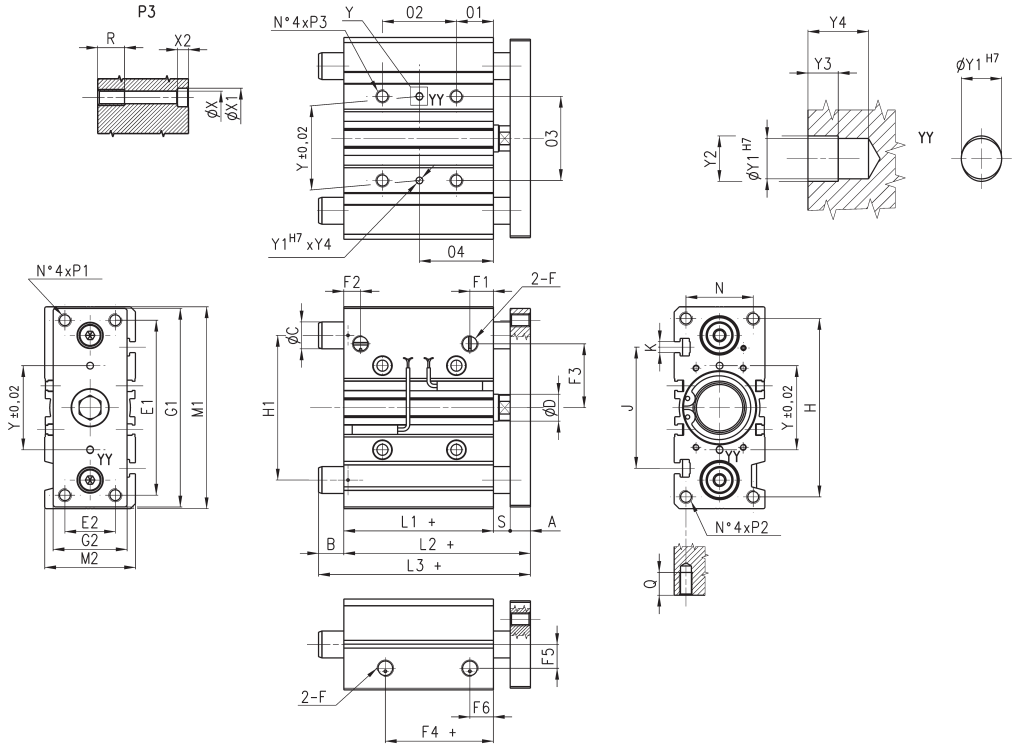

In case of use of lateral ports, unscrew the related threaded caps, screw them in the front ports and tighten them up to the cylinder surface (not tighter) having care to use a proper sealer.

DIMENSIONS													
Dimension 02 (mm)	Ø 20	Ø 25	Ø 32	Ø 40	Ø 50	Ø 63	Dimension 04 (mm)	Ø 20	Ø 25	Ø 32	Ø 40	Ø 50	Ø 63
20 ÷ 30	24	24	24	24	24	28	**20 ÷ 30**	29	29	33	34	36	38
40 ÷ 100	44	44	48	48	48	52	**40 ÷ 100**	39	39	45	46	48	50
125 ÷ 200	120	120	124	124	124	128	**125 ÷ 200**	77	77	83	84	86	88

DIMENSIONS

Ø	A	ØD	E1	E2	F	F1	F2	F3	F4	F5	F6	G1	G2	H	H1	L1	L2	M1	M2	N	01	03	P1/P2	P3	Q	R	S	Y	Y1	Y2	Y3	Y4	X	X1	X2	J	K
20	10	10	70	18	G1/8	10.5	10.5	25	12.5	11.5	10.5	81	30	72	54	37	53	83	36	24	17	28	M5X0.8	M6X1	13	12	6	28	3	3.5	3	6	5.5	9	5	44	M5
25	10	12	78	26	G1/8	11.5	8	28.5	12.5	13.5	11.5	91	40	82	64	37.5	53.5	93	42	30	17	34	M6X1	M6X1	15	12	6	34	4	4.5	3	6	5.5	9	5	50	M5
32	12	16	96	30	G1/8	12.5	9.5	34	7	15	12.5	110	45	98	78	37.5	59.5	112	48	34	21	42	M8X1.25	M8X1.25	20	16	10	42	4	4.5	3	6	6.5	11	6.5	63	M6
40	12	16	104	30	G1/8	13	12	38	13	18	13	118	45	106	86	44	66	120	54	40	22	50	M8X1.25	M8X1.25	20	16	10	50	4	4.5	3	6	6.5	11	6.5	72	M6
50	15	20	130	40	G1/4	14	11	47	8	21.5	12	146	60	130	110	44	72	148	64	46	24	66	M10X1.5	M10X1.5	22	20	13	66	5	6	4	8	8.5	14	8.5	92	M8
63	15	20	130	50	G1/4	14.5	11.4	55	12	28	14.5	158	70	142	124	49	77	162	78	58	24	80	M10X1.5	M10X1.5	22	20	13	80	5	6	4	8	8.5	14	8.5	110	M10

QCB: total length (L3), projection (B) and guide columns Ø (ØC)

Note: for out of standard intermediate strokes (ex. stroke 35), consider the immediately higher stroke dimensions (ex. stroke 40). Standard strokes can be found in the dedicated table on page 4.05.02.

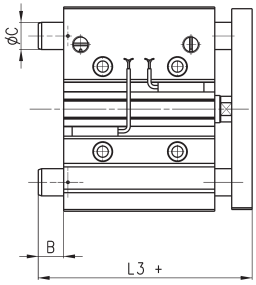

Dimensions L3 and B change according to the different strokes of QCB.

DIMENSIONS															
Ø	L3 (strokes 20-30 mm)	L3 (strokes 25-50 mm)	L3 (strokes 25-75 mm)	L3 (strokes 40-100 mm)	L3 (strokes 75-100 mm)	L3 (strokes 100-200 mm)	L3 (strokes 125-200 mm)	B (strokes 20-30 mm)	B (strokes 25-50 mm)	B (strokes 25-75 mm)	B (strokes 40-100 mm)	B (strokes 75-100 mm)	B (strokes 100-200 mm)	B (strokes 125-200 mm)	ØC
20	72	-	-	75	-	-	85	19	-	-	22	-	-	32	10
25	74.5	-	-	85.5	-	-	98	21	-	-	32	-	-	44.5	12
32	-	86	-	-	95	-	110	-	26.5	-	-	35.5	-	50.5	16
40	-	86	-	-	95	-	110	-	20	-	-	29	-	44	16
50	-	-	93	-	-	112	-	-	-	21	-	-	40	-	20
63	-	-	93	-	-	112	-	-	-	16	-	-	35	-	20

QCT: total length (L3), projection (B) and columns Ø (ØC)

Note: for out of standard intermediate strokes (ex. stroke 35), consider the immediately higher stroke dimensions (ex. stroke 40). Standard strokes can be found in the dedicated table on page 4.05.02.

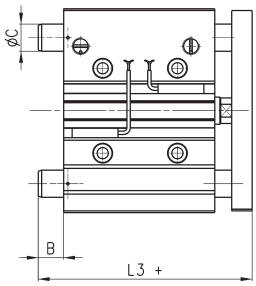

Dimensions L3 and B change according to the different strokes of QCT.

DIMENSIONS															
Ø	L3 (strokes 20-50 mm)	L3 (stroke 20 mm)	L3 (stroke 25 mm)	L3 (strokes 30-50 mm)	L3 (strokes 25-200 mm)	L3 (strokes 75-200 mm)	L3 (strokes 50-200 mm)	B (strokes 20-50 mm)	B (stroke 20 mm)	B (stroke 25 mm)	B (strokes 30-50 mm)	B (strokes 25-200 mm)	B (strokes 75-200 mm)	B (strokes 50-200 mm)	ØC
20	74.5	-	-	-	-	79.5	-	21.5	-	-	-	-	26.5	-	12
25	-	74.5	-	80.5	-	85	-	-	21	-	27	-	31.5	-	16
32	-	-	73.5	-	-	-	91.5	-	-	14	-	-	-	32	20
40	-	-	73.5	-	-	-	91.5	-	-	7.5	-	-	-	25.5	20
50	-	-	-	-	98.5	-	-	-	-	-	-	26.5	-	-	25
63	-	-	-	-	98.5	-	-	-	-	-	-	21.5	-	-	25

Series QCTF - QCBF cylinders with integrated guide

Double-acting, magnetic, with double bearings and flanges ø 20, 25, 32, 40 mm

- Magnetic sensors can be mounted on both sides
- QCTF: bronze bushings
- QCBF: ball bearing guide
- Movement and guide in one unit

These cylinders have been designed to be used in applications where space is limited. Regarding the bearings, the Slide Units are available in two versions, one with double sintered bronze bushes (Mod. QCTF) and the other with double linear ball bearings (Mod. QCBF). The QCTF version would normally be selected when the side loads applied to the slide unit are high. Mod. QCBF is suitable for fast cycles (less side load) and higher precision.

The end cushioning is available in three different variants:
A. fixed mechanical cushion (standard)
B. with two shock absorbers located on the body
C. with one shock absorber located central on the rear flange.
The versions B and C are suitable for handling of higher mass forces and / or when it is necessary to adjust the stroke.

GENERAL DATA

Type of construction	guided with double bearings and double flanges QCTF = sintered bronze bushes QCBF = linear ball bearings
Operation	double-acting
Materials	body = anodized AL flanges = zinc-plated steel piston rod = rolled stainless steel AISI QCTF columns = rolled stainless steel 420B QCBF columns = hardened steel C50 seals = PU
Mounting	threaded and non threaded holes in the body
Strokes min. max	(see table)
Operating temperature	0°C ÷ 80°C (with dry air -20°C)
Speed	50 ÷ 500 mm/s
Stroke end cushioning Type A	extended stroke - fixed mechanical cushioning retracted stroke - fixed mechanical cushioning we recommend preventing the piston from striking against the end covers
Stroke end cushioning Type B	extended stroke - shock absorber retracted stroke - shock absorber
Stroke end cushioning Type C	extended stroke - shock absorber retracted stroke - fixed mechanical cushioning we recommend preventing the piston from striking against the end covers
Operating pressure	1 ÷ 10 bar
Fluid	clean air, non lubricated. If lubricated air is used, it is recommended to use oil ISOVG32. Once applied the lubrication should never be interrupted.

STANDARD STROKES FOR DOUBLE-ACTING CYLINDERS SERIES QCTF AND QCBF

■ = Type A and C
✖ = Type B

Out of standard intermediate strokes available on request (strokes multiple of 5 mm)

STANDARD STROKES											
Ø	20	25	30	40	50	75	100	125	150	175	200
20	■		■	■	■	■ ✖	■ ✖	■ ✖	■ ✖	■ ✖	■ ✖
25	■		■	■	■	■ ✖	■ ✖	■ ✖	■ ✖	■ ✖	■ ✖
32		■			■	■	■ ✖	■ ✖	■ ✖	■ ✖	■ ✖
40		■			■	■	■ ✖	■ ✖	■ ✖	■ ✖	■ ✖

CODING EXAMPLE

QC	T	F	2	A	020	A	050

QC	SERIES	
T	TYPE OF BEARING: T = sintered bronze bushes B = linear ball bearings	
F	VERSION: F = double flange	
2	OPERATION: 2 = double-acting	PNEUMATIC SYMBOL: CD14
A	MATERIALS: A = anodized aluminium body - rolled stainless steel piston rod AISI 303 rolled stainless steel AISI 420B colums for QCTF - hardened steel C50 colums for QCBF	
020	BORE: 020 = 20 mm - 025 = 25 mm - 032 = 32 mm - 040 = 40 mm	
A	CUSHION: A = fixed mechanical cushion (standard) B = two shock absorbers located on the body C = one shock absorber located on the rear flange	
050	STROKE (see the table)	

PNEUMATIC SYMBOLS

The pneumatic symbols which have been indicated in the CODING EXAMPLE are shown below.

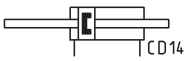

TABLE OF PERMISSABLE LOADS (F1)

For sintered bronze bushes
QCTF version
For linear ball bearings
QCBF version

F1 (N) 1N = 0.102 kgf

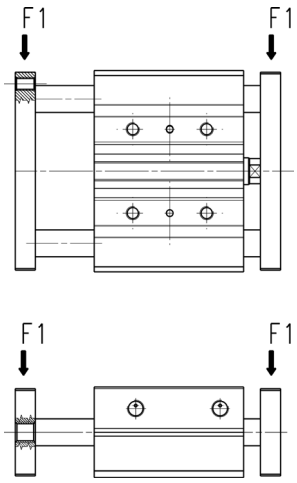

STROKE												
Ø		20	25	30	40	50	75	100	125	150	175	200
20	**QCTF**	136	-	124	124	123	122	122	121	121	120	120
	QCBF	146	-	142	140	139	137	136	134	94	70	53
25	**QCTF**	181	-	167	165	164	163	162	161	160	159	158
	QCBF	171	-	167	165	163	161	160	160	159	142	109
32	**QCTF**	-	174	-	-	166	162	160	158	156	155	153
	QCBF	-	220	-	-	214	211	211	210	210	209	209
40	**QCTF**	-	189	-	-	175	168	164	161	159	157	155
	QCBF	-	228	-	-	219	214	214	212	212	211	210

TABLE OF PERMISSABLE MOMENTS (M1)

For sintered bronze bushes
QCTF version
For linear ball bearings
QCBF version

M1 (N*m) 1N*m = 0,102 kgf*m

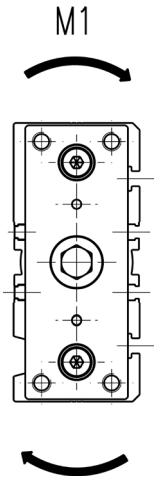

STROKE												
Ø	Mod.	20	25	30	40	50	75	100	125	150	175	200
20	**QCTF**	3,6	-	3,3	3'3	3,3	3,2	3,2	3,2	3,2	3,2	3,2
	QCBF	3,9	-	3,7	3,7	3,7	3,6	3,6	3,6	2,5	1,89	1,4
25	**QCTF**	5,7	-	5,2	5,2	5,2	5,2	5,1	5,1	5,1	5	5
	QCBF	5,4	-	5,2	5,2	5,2	5,1	5,1	5,1	5	4,5	3,4
32	**QCTF**	-	6,7	-	-	6,4	6,3	6,2	6,1	6	6	5,9
	QCBF	-	8,5	-	-	8,3	8,2	8,2	8,1	8,1	8,1	8,1
40	**QCTF**	-	8,1	-	-	7,5	7,2	7	6,9	6,8	6,7	6,6
	QCBF	-	9,8	-	-	9,4	9,2	9,2	9,1	9,1	9	9

Mod. QCTF and QCBF type "A"

+ = add the stroke once
++ = add the stroke twice
Note: for out of standard intermediate strokes (ex. stroke 35), consider the immediately higher stroke dimensions (ex. stroke 40).

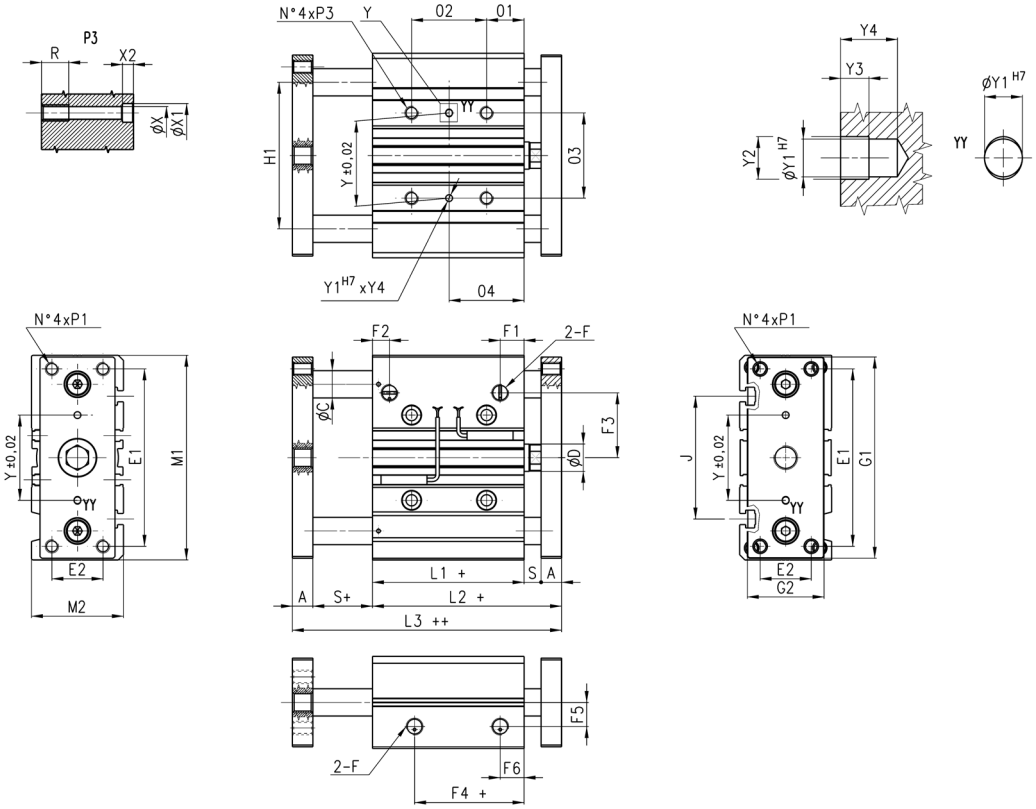

In case of use of lateral ports, unscrew the related threaded caps, screw them in the front ports and tighten them up to the cylinder surface (not tighter) having care to use a proper sealer.

DIMENSIONS											
Ø	P1	P3	Y1	Y2	Y3	Y4	X	X1	X2	J	K
20	M5x0,8	M6x1	3	3,5	3	6	5,5	9	5	44	M5
25	M6x1	M6x1	4	4,5	3	6	5,5	9	5	50	M5
32	M8x1,25	M8x1,25	4	4,5	3	6	6,5	11	6,5	63	M6
40	M8x1,25	M8x1,25	4	4,5	3	6	6,5	11	6,5	72	M6

	02 stroke 20-30	02 stroke 40-100	02 stroke 125-200	04 stroke 20-30	04 stroke 40-100	04 stroke 125-200	QCBF ØC	QCTF ØC
20	24	44	120	29	39	77	10	12
25	24	44	120	29	39	77	12	16
32	24	48	124	33	45	83	16	20
40	24	48	124	34	46	84	16	20

DIMENSIONS																							
Ø	A	øD	E1	E2	F	F1	F2	F3	F4	F5	F6	G1	G2	H1	L1	L2	L3	M1	M2	01	03	R	S	Y
20	10	10	70	18	1/8	10.5	10.5	25	12.5	11.5	10.5	81	30	54	37	53	69	83	36	17	28	12	6	28
25	10	12	78	26	1/8	11.5	8	28.5	12.5	13.5	11.5	91	40	64	37.5	53.5	69.5	93	42	17	34	12	6	34
32	12	16	96	30	1/8	12.5	9.5	34	7	15	12.5	110	45	78	37.5	59.5	81.5	112	48	21	42	16	10	42
40	12	16	104	30	1/8	13	12	38	13	18	13	118	45	86	44	66	88	120	54	22	50	16	10	50

Mod. QCTF and QCBF type "B"

+ = add the stroke once
++ = add the stroke twice
Note: for out of standard intermediate strokes (ex. stroke 35), consider the immediately higher stroke dimensions (ex. stroke 40).

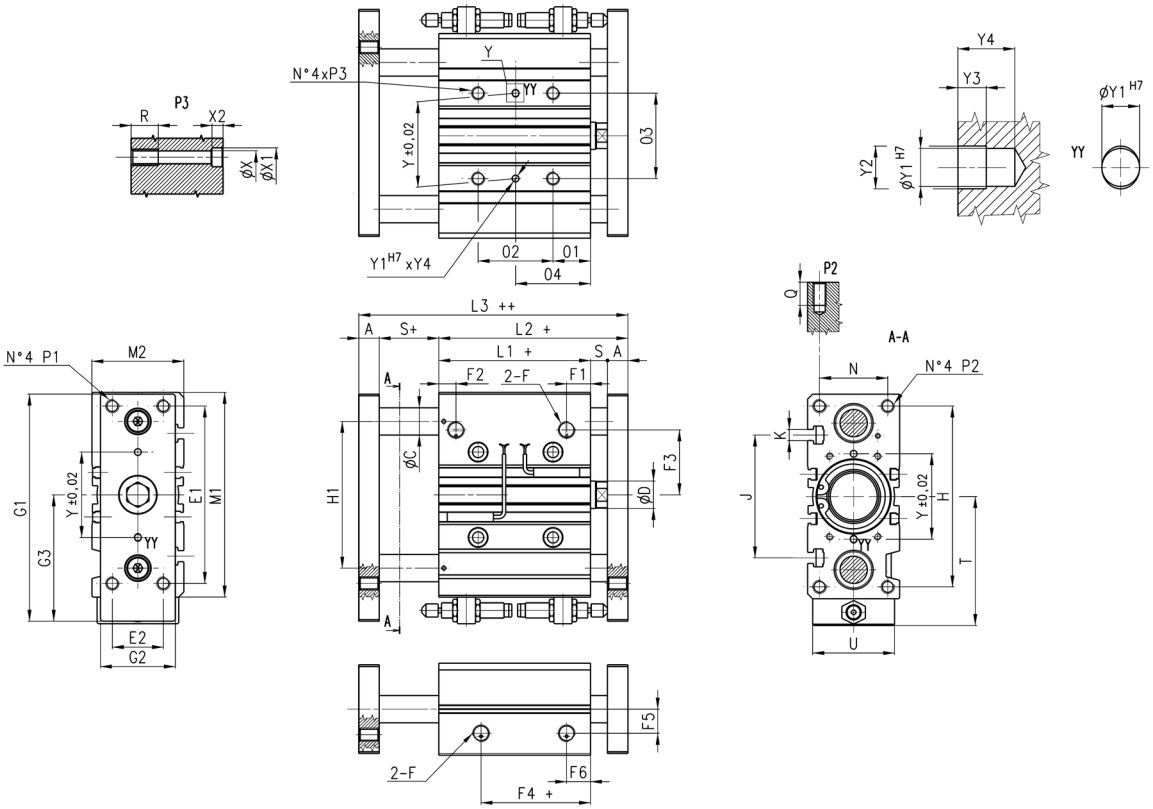

In case of use of lateral ports, unscrew the related threaded caps, screw them in the front ports and tighten them up to the cylinder surface (not tighter) having care to use a proper sealer.

DIMENSIONS																	
Ø	P1	P3	T	U	Y	Y1	Y2	Y3	Y4	X	X1	X2	J	K	Shock absorber	Δ stroke (mm)	adjustment range cyl. stroke mm
20	M5x0,8	M6x1	57,5	32	28	3	3,5	3	6	5,5	9	5	44	M5	SA-1007	0 ÷ 15	0 ÷ +12
25	M6x1	M6x1	62,5	38	34	4	4,5	3	6	5,5	9	5	50	M5	SA-1007	0 ÷ 15	0 ÷ +8
32	M8x1,25	M8x1,25	81	44	42	4	4,5	3	6	6,5	11	6,5	63	M6	SA-1412	0 ÷ 20	0 ÷ +10
40	M8x1,25	M8x1,25	85	44	50	4	4,5	3	6	6,5	11	6,5	72	M6	SA-1412	0 ÷ 20	0 ÷ +11

	02 stroke 75	02 stroke 100	02 stroke 125-200	04 stroke 20-30	04 stroke 40-100	04 stroke 125-200	QCBF ØC	QCTF ØC
20	44	44	120	29	39	77	10	12
25	44	44	120	29	39	77	12	16
32	-	48	124	33	45	83	16	20
40	-	48	124	34	46	84	16	20

DIMENSIONS																							
Ø	A	øD	E1	E2	F	F1	F2	F3	F4+	F5	F6	G1	G2	G3	H1	L1+	L2+	L3++	M1	M2	O1	O3	R	S
20	10	10	70	18	1/8	10,5	10,5	25	12,5	11,5	10,5	97	30	56,5	54	37	53	69	83	36	17	28	12	6
25	10	12	78	26	1/8	11,5	8	28,5	12,5	13,5	11,5	107	40	61,5	64	37,5	53,5	69	93	42	17	34	12	6
32	12	16	96	30	1/8	12,5	9,5	34	7	15	12,5	134	45	79	78	37,5	59,5	81,5	112	48	21	42	16	10
40	12	16	104	30	1/8	13	12	38	13	18	13	141	45	82	86	44	66	88	120	54	22	50	16	10

Mod. QCTF and QCBF type "C"

+ = add the stroke once
++ = add the stroke twice
Note: for out of standard intermediate strokes (ex. stroke 35), consider the immediately higher stroke dimensions (ex. stroke 40).

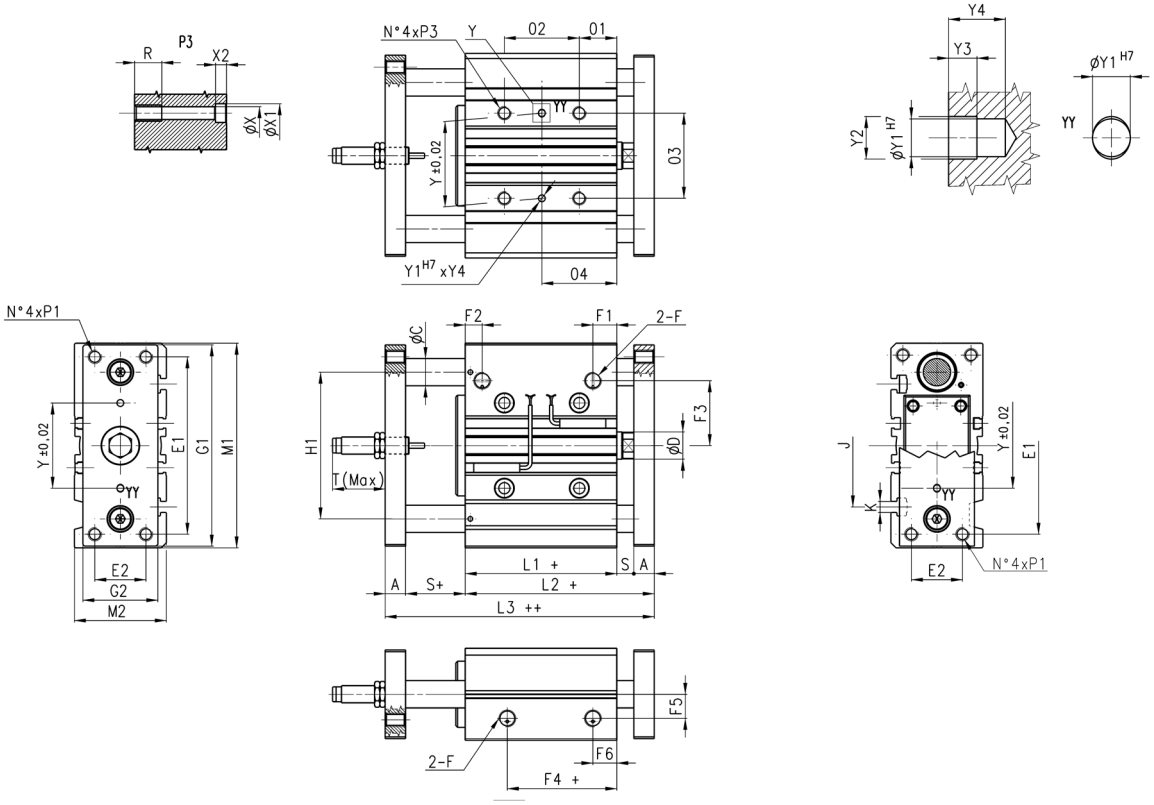

In case of use of lateral ports, unscrew the related threaded caps, screw them in the front ports and tighten them up to the cylinder surface (not tighter) having care to use a proper sealer.

DIMENSIONS

Ø	P1	P3	T_{Max}	Y	Y1	Y2	Y3	Y4	X	X1	X2	J	K	Shock absorber	Δ stroke (mm)	adjustment range cyl. stroke (mm)
20	M5x0,8	M6x1	37	28	3	3,5	3	6	5,5	9	5	44	M5	SA-1007 W	0 ÷ 25	-15 ÷ -25
25	M6x1	M6x1	37	34	4	4,5	3	6	5,5	9	5	50	M5	SA-1007 W	0 ÷ 25	-15 ÷ -25
32	M8x1,25	M8x1,25	55	42	4	4,5	3	6	6,5	11	6,5	63	M6	SA-1412 W	0 ÷ 35	-18 ÷ -35
40	M8x1,25	M8x1,25	55	50	4	4,5	3	6	6,5	11	6,5	72	M6	SA-1412 W	0 ÷ 35	-18 ÷ -35

	02 stroke 20-30	02 stroke 40-100	02 stroke 125-200	04 stroke 20-30	04 stroke 40-100	04 stroke 125-200	QCBF ØC	QCTF ØC
20	24	44	120	29	39	77	10	12
25	24	44	120	29	39	77	12	16
32	24	48	124	33	45	83	16	20
40	24	48	124	34	46	84	16	20

DIMENSIONS

Ø	A	øD	E1	E2	F	F1	F2	F3	F4+	F5	F6	G1	G2	H1	L1+	L2+	L3++	M1	M2	01	03	R	S
20	10	10	70	18	1/8	10,5	10,5	25	12,5	11,5	10,5	81	30	54	37	53	69	83	36	17	28	12	6
25	10	12	78	26	1/8	11,5	8	28,5	12,5	13,5	11,5	91	40	64	37,5	53,5	69,5	93	42	17	34	12	6
32	12	16	96	30	1/8	12,5	9,5	34	7	15	12,5	110	45	78	37,5	59,5	81,5	112	48	21	42	16	10
40	12	16	104	30	1/8	13	12	38	13	18	13	118	45	86	44	66	88	120	54	22	50	16	10

Series QX twin cylinders

Double-acting, magnetic, guided
ø 10x2, 16x2, 20x2, 25x2, 32x2 mm

- High force
- Precise movement
- Integrated guide
- QXB: linear ball bearings
- QXT: sintered bronze bushes

Series QX actuators offer a wide range of solutions covering a great number of applications which require a guided linear movement. The design of the double piston, besides assuring a solid and effective guide, offers double force in compact dimensions.
Where a high force with precise movement is required, along with a non-rotation function and integrated guide, the QX cylinders are the ideal solution.

The range includes two guide versions with sintered bronze bushes or with linear ball bearings.

GENERAL DATA

Type of construction	compact, non magnetic QXT = sintered bronze bushes - QXB = linear ball bearings
Operation	double-acting
Materials	body and flange = anodized AL QXT piston rod = stainless steel AISI 303 - QXB piston rod = hardened steel C50 seals = PU
Mounting method	by means of threaded holes
Strokes	from 10 to 100
Operating temperature	0° ÷ 80°C (with dry air - 20°C)
Operating speed	50 ÷ 500 mm/s
Operating pressure	1 ÷ 10 bar
Fluid	clean air, without lubrication. If lubricated air is used, it is recommended to use oil ISOVG32. Once applied the lubrication should never be interrupted.

STANDARD STROKES FOR TWIN CYLINDERS SERIES QX

■ = Double-acting

STANDARD STROKES							
Ø	10	20	30	40	50	75	100
10	■	■	■	■	■	■	
16	■	■	■	■	■	■	■
20	■	■	■	■	■	■	■
25	■	■	■	■	■	■	■
32	■	■	■	■	■	■	■

CODING EXAMPLE

QX	T	2	A	020	A	050

QX	SERIES	
T	VERSION T = sintered bronze bushes B = linear ball bearings	
2	OPERATION 2 = double-acting (1 flange) radial / axial pressure supply 3 = double-acting through-rod (double-flange), radial pressure supply	PNEUMATIC SYMBOLS CD15 CD16
A	MATERIALS A = anodized aluminium body, rolled stainless steel AISI 303 (QXT) or hardened steel C50 (QXB) piston rod	
020	BORE 010 = 10 mm - 016 = 16 mm - 020 = 20 mm - 025 = 25 mm - 032 = 32 mm	
A	TYPE OF DESIGN A = standard	
050	STROKE (see the table)	

PNEUMATIC SYMBOLS

The pneumatic symbols which have been indicated in the CODING EXAMPLE are shown below.

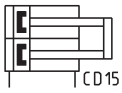

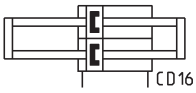

Fixing examples with flange in motion

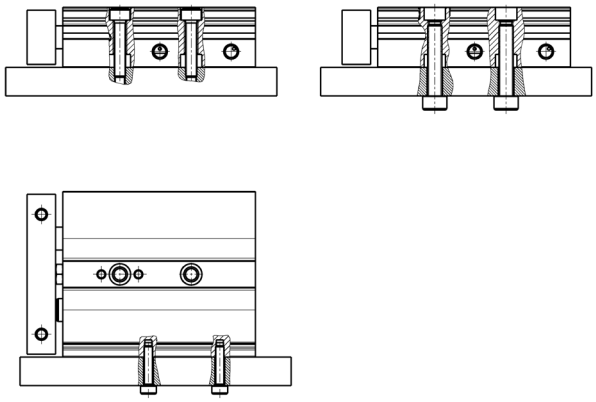

For diameters from 16 to 32

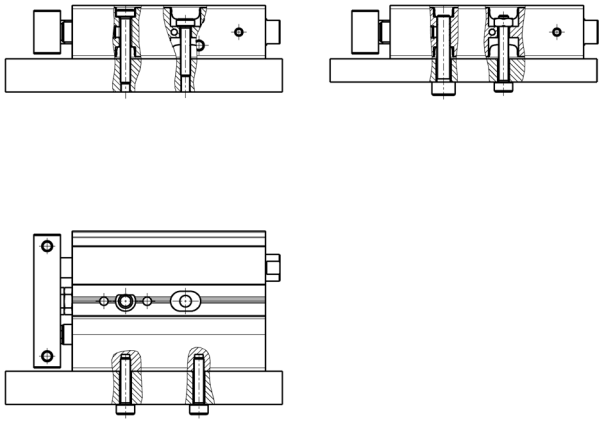

To mount the sensors of QX cylinders ø 10 in the middle grooves, it is advisable to use M3 screws UNI 9327 and nuts M3 UNI 5589.

Fixing examples with cylinder body in motion

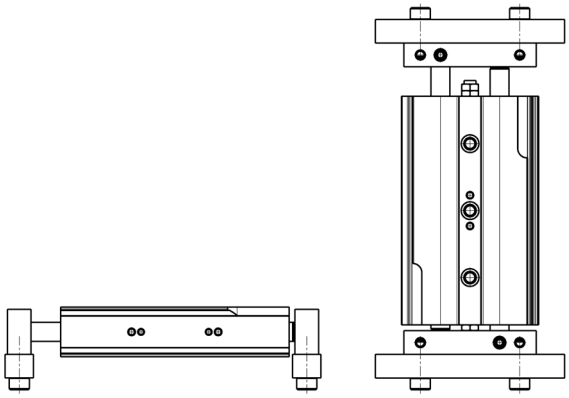

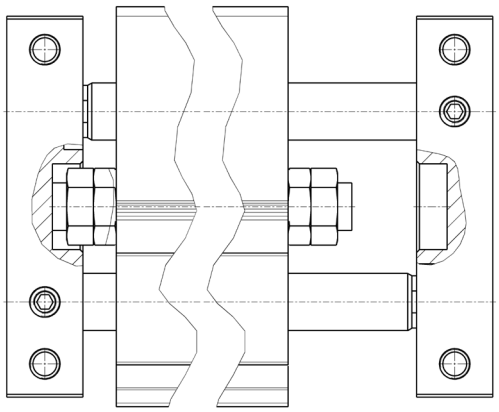

The front and rear regulation screw allows the adjustment of the stroke up to –10mm.

DIAGRAM OF MAX APPLICABLE LOADS DEPENDING ON THE STROKE (X)

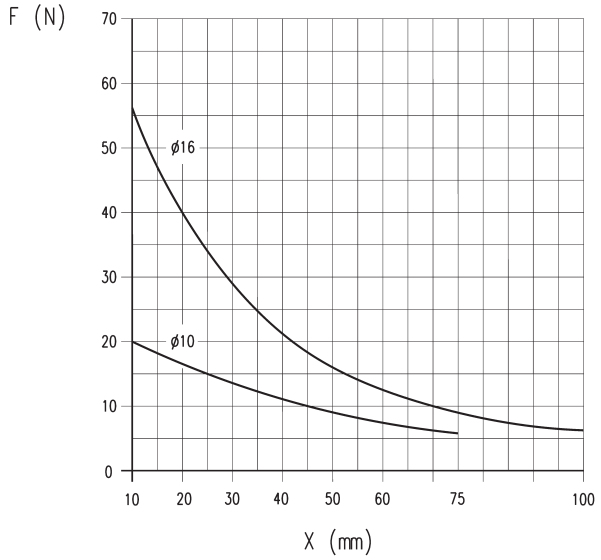

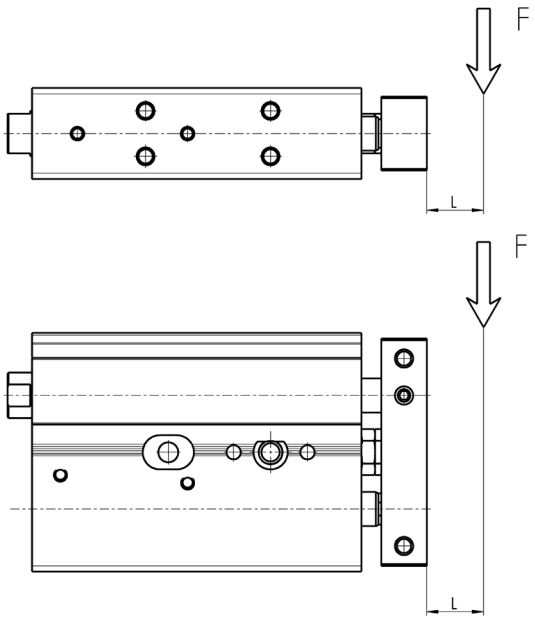

X = cylinder stroke mm.
F = load applied on the flange in N.

Load " F " should be considered fixed on the flange of the cylinder and with a theorical projection of L = 0 mm.

DIAGRAM OF MAX APPLICABLE LOADS DEPENDING ON THE STROKE (X)

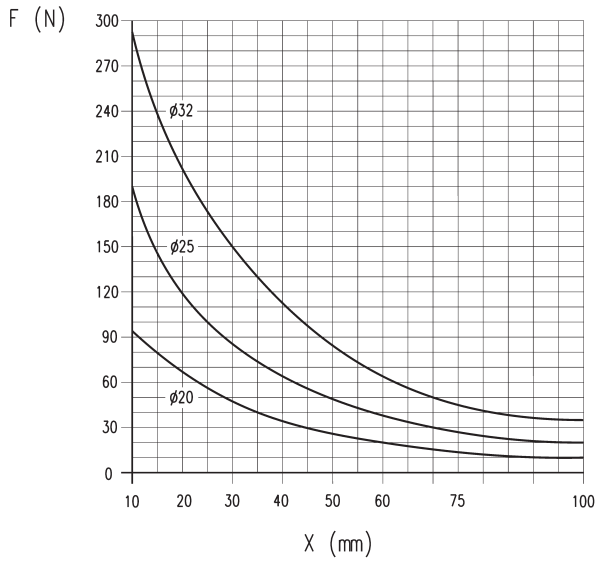

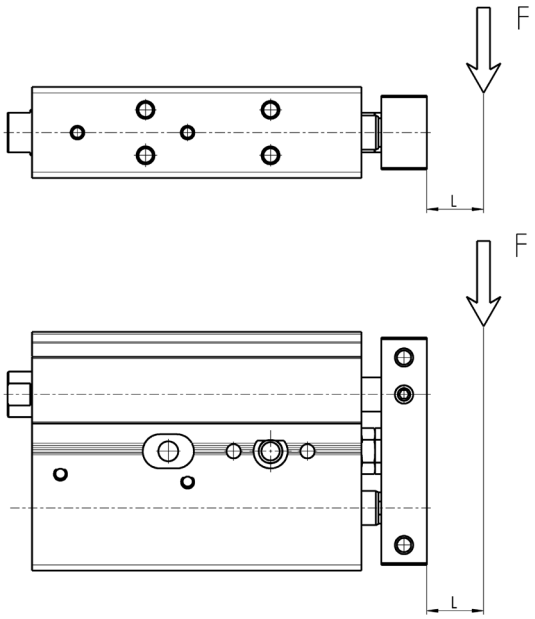

X = cylinder stroke mm.
F = load applied on the flange in N.

Load " F " should be considered fixed on the flange of the cylinder and with a theorical projection of L = 0 mm.

DIAGRAM OF MAX TORQUE MOMENT DEPENDING ON THE STROKE (X)

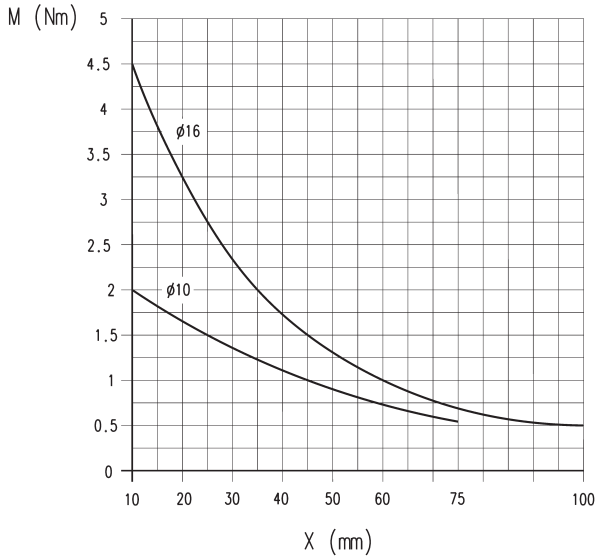

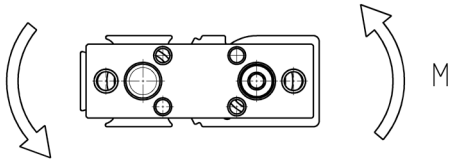

X = cylinder stroke in mm.
M = torque moment applied on the flange in Nm.

DIAGRAM OF MAX TORQUE MOMENT DEPENDING ON THE STROKE (X)

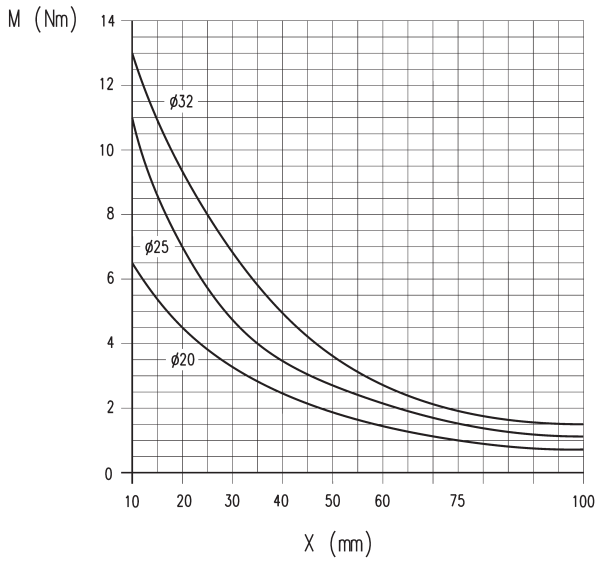

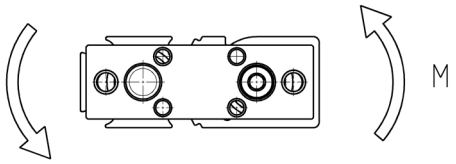

X = cylinder stroke in mm.
M = torque moment applied on the flange in Nm.

Cylinders Series QX (single flange)

NOTE: for out of standard intermediate strokes (ex. stroke 37), you have to consider the dimensions referring to the immediately higher stroke (ex. stroke 40) with a maximum permitted reduction of 10 mm.

+ = add the stroke

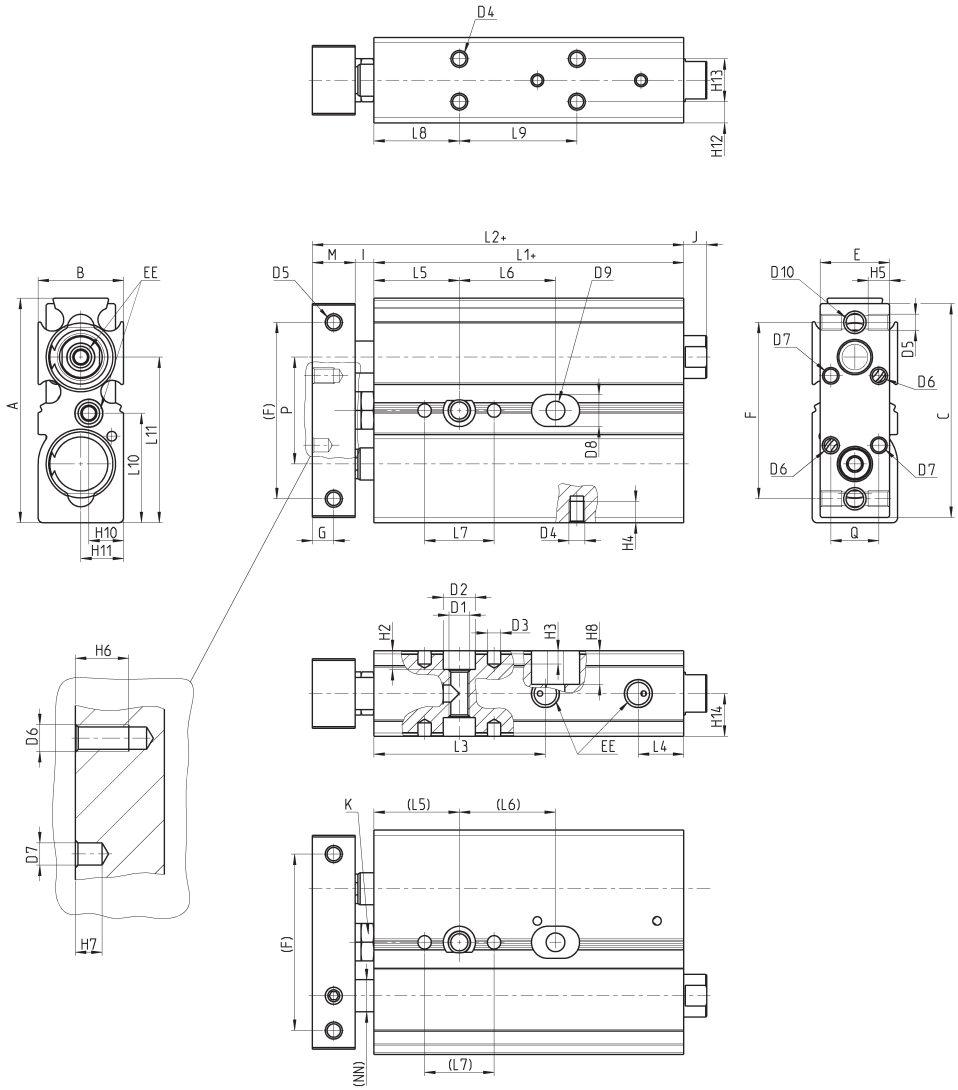

Dimensions for Series QX with single flange

+ = add the stroke

DIMENSIONS						
	Stroke (mm)	Ø 10	Ø 16	Ø 20	Ø 25	Ø 32
A		42	58	62	76	94
B		16	21	25	30	37
C		40	56	60	71	92
E		13	19	22	27	35
F		33	42	50	60	75
G		4	5	6	6	8
I		3,5	2,5	4,5	4,5	4
M		8	10	12	12	16
Q		9	11	16	16	16
R		13	13	18	18	18
L1+		48	57,5	67,5	70,5	80,5
L2+		59,5	70	84	87	100,5
L3		32,1	34	39,5	44,0	46,5
L4		8,5	8,5	9	8,5	12
L5		16	20	25	30	30
L6	10	18	25	30	30	40
L6	20	28	25	30	30	40
L6	30	38	35	40	40	50
L6	40	48	35	40	40	50
L6	50	58	35	40	40	50
L6	75	83	45	60	60	70
L6	100	-	55	60	60	70
L7		13	13	20	20	20
L8		16	30	30	30	30
L9	10	22	25	30	30	40
L9	20	32	25	30	30	40
L9	30	42	35	40	40	50
L9	40	52	35	40	40	50
L9	50	62	35	40	40	50
L9	75	87	45	60	60	70
L9	100	-	55	60	60	70
L10		20,5	29	31	38	47
L11		31	52	57,2	71,5	47
H2		3,5	4,5	5,5	6,5	6,5
H3		2,5	4,0	4,0	4,0	4,0
H4		4,0	5,0	4,5	5,0	7,5
H5		6,5	6,0	6,0	6,0	7,5
H6		8,0	6,0	8,0	8,0	8,0
H7		3,0	3,0	4,0	4,0	4,0
H8		6,3	-	-	-	-
H10		6,5	10,5	10,5	15	8,5
H11		8	16,5	20,2	21,5	28,5
H12		4	10,5	8,00	8,5	8,5
H13		8	-	9,0	13,0	20,0
H14		8	5,5	12,5	15,0	18,5
D1		M4	M5	M6	M8	M8
D2		6	7,5	9,5	10,5	10,5
D3		2,5	2,5	4	4	4
D4		M3	M3	M4	M5	M5
D5		M3	M4	M4	M5	M5
D6		M3	M3	M4	M4	M4
D7		2,5	2,5	4,0	4,0	4,0
D8		6,0	-	-	-	-
D9		3,5	-	-	-	-
D10		M4	M5	M5	M6	M6
NN		6	8	10	12	16
EE		M5	M5	M5	M5	G1/8
J		4,3	-	-	-	-
K		7	7	8	8	10
P		20	25	29	35	45

Cylinders Series QX (double flange)

NOTE: for out of standard intermediate strokes (ex. stroke 37), you have to consider the dimensions referring to the immediately higher stroke (ex. stroke 40) with a maximum permitted reduction of 10 mm.

+ = add the stroke

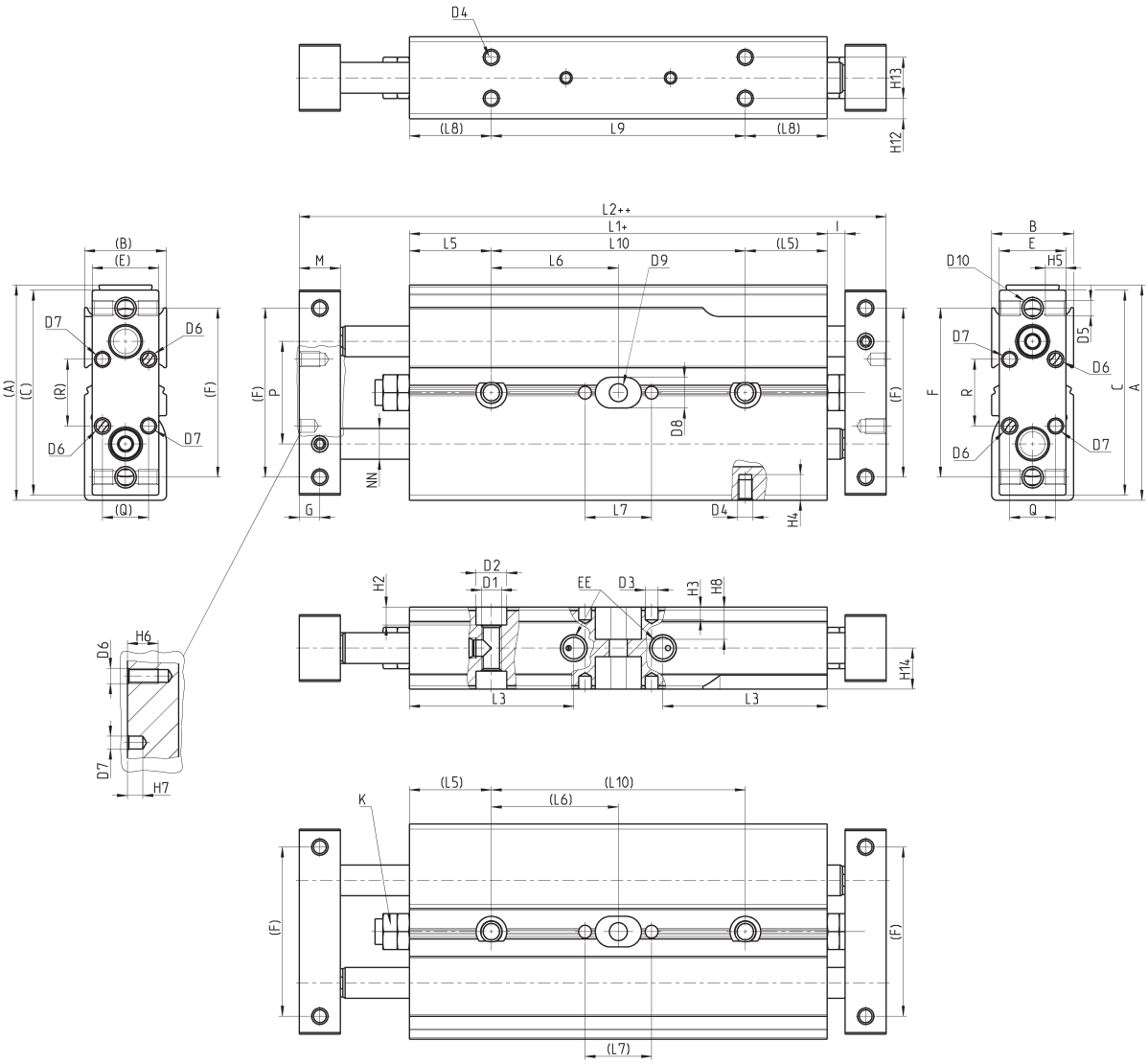

Dimensions for Series QX with double flange

+ = add the stroke
++ = add the stroke 2 times

DIMENSIONS						
	Stroke (mm)	Ø 10	Ø 16	Ø 20	Ø 25	Ø 32
A		42	58	62	76	94
B		16	21	25	30	37
C		40	56	60	71	92
E		13	19	22	27	35
F		33	42	50	60	45
G		4	5	6	6	6
I		3,5	2,5	4,5	4,5	4
M		8	10	12	12	16
Q		9	11	16	16	16
R		13	13	18	18	18
L1+		72	86,6	98	104,2	115,6
L2++		95	111,6	131	137,2	155,6
L3		32,1	34	39,5	44	46,5
L5		16	20	25	30	30
L6	10	25	28,3	29,0	27,1	32,8
L6	20	30	33,3	34,0	32,1	37,8
L6	30	35	38,3	39,0	37,1	42,8
L6	40	40	43,3	44,0	42,1	47,8
L6	50	45	48,3	49,0	47,1	52,8
L6	75	57,3	60,8	61,5	59,6	65,3
L6	100	-	73,3	74,0	72,1	77,8
L7		13	13	20	20	20
L8		16	30	30	30	30
L9	10	49,6	36,6	48	54,2	65,6
L9	20	59,6	46,6	58	64,2	75,6
L9	30	69,6	56,6	68	74,2	85,6
L9	40	79,6	66,6	78	84,2	95,6
L9	50	89,6	76,6	88	94,2	105,6
L9	75	114,6	101,6	113	119,2	130,6
L9	100	-	126,6	138	144,2	155,6
L10	10	49,6	56,6	58,0	54,2	65,6
L10	20	59,6	66,6	68,0	64,2	75,6
L10	30	69,6	76,6	78,0	74,2	85,6
L10	40	79,6	86,6	88,0	84,2	95,6
L10	50	89,6	96,6	98,0	94,2	105,6
L10	75	114,6	121,6	123,0	119,2	130,6
L10	100	-	146,6	148,0	144,2	155,6
H2		6,3	4,5	5,50	6,5	6,5
H3		2,5	4,0	4,00	4	4
H4		4	5,0	4,50	5	7,5
H5		6,5	6,0	6,00	6	7,5
H6		8	6,0	8,00	8	8
H7		3	3,0	4,00	4	4
H8		6,3	-	-	-	-
D1		M4	M5	M6	M8	M8
D2		6	7,5	9,5	10,5	10,5
D3		2,5	2,5	4	4	4
D4		M3	M3	M4	M5	M5
D5		M3	M4	M4	M5	M5
D6		M3	M3	M4	M4	M4
D7		2,5	2,5	4	4	4
D8		6	-	-	-	-
D9		3,5	-	-	-	-
D10		M4	M5	M5	M6	M6
NN		6	8	10	12	16
EE		M5	M5	M5	M5	G1/8
K		7	7	8	8	10
P		20	25	29	35	40

Series 14
compact mini-cylinders

Single-acting
Bores ø 6, 10, 16 mm and strokes 5, 10, 15 mm
With super-rapid fitting ø 4 and M5 port

- Compact design
- With threaded or non threaded piston rod
- Threaded body

Series 14 single-acting compact mini-cylinders have been designed for installation in very small spaces. The design allows the cylinders to be inserted into threaded blocks incorporated in the machine.

All the minicylinders are supplied with a super-rapid fitting incorporated in a tube ø 4 or with a M5 thread. They are available in two versions with either a threaded or a non threaded piston rod.

GENERAL DATA

Type of construction	compact, non magnetic
Operation	single-acting
Materials	body = brass seals = NBR other = stainless steel
Operating pressure	P. min 2,5 bar - P. max 8 bar
Operating temperature	0°C ÷ 80°C (with dry air - 20°C)
Fluid	clean air, without lubrication. If lubricated air is used, it is recommended to use oil ISOVG32. Once applied the lubrication should never be interrupted.
Bore	ø 6, 10, 16
Stroke	see table
Mounting method	by means of threaded body

CODING EXAMPLE

14	N	1	A	06	A	05

14	SERIES	
N	VERSION N = non-magnetic	
1	OPERATION 1 = single-acting	PNEUMATIC SYMBOL CS01
A	TYPE OF CONNECTION A = tube Ø 4 M = thread M5	
06	BORE 06 = 6 mm - 10 = 10 mm - 16 = 16 mm	
A	TYPE OF DESIGN A = non-threaded smooth piston rod B = threaded piston rod	
05	STROKE 05 = 5 mm - 10 = 10 mm - 15 = 15 mm	

PNEUMATIC SYMBOLS

The pneumatic symbols which have been indicated in the CODING EXAMPLE are shown below.

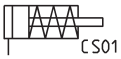

Compact minicylinders with non threaded piston rod Mod. 14N1A

Super-rapid fitting incorporated

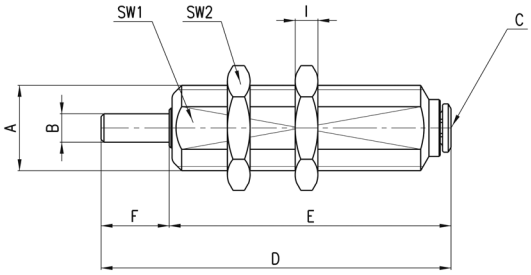

DIMENSIONS											
Mod.	Ø	STROKE	A	B	C	D	E	F	SW1	SW2	I
14N1A06A05	6	5	M10x1	3	4\2	34	29	5	9	12	3
14N1A06A10	6	10	M10x1	3	4\2	42	37	5	9	12	3
14N1A06A15	6	15	M10x1	3	4\2	47	42	5	9	12	3
14N1A10A05	10	5	M15x1,5	5	4\2	50	38	12	13	19	4
14N1A10A10	10	10	M15x1,5	5	4\2	57	45	12	13	19	4
14N1A10A15	10	15	M15x1,5	5	4\2	62	50	12	13	19	4
14N1A16A05	16	5	M22x1,5	6	4\2	53,5	39,5	14	20	27	5
14N1A16A10	16	10	M22x1,5	6	4\2	62	48	14	20	27	5
14N1A16A15	16	15	M22x1,5	6	4\2	67	53	14	20	27	5

Compact minicylinders with threaded piston rod Mod. 14N1A

Super-rapid fitting incorporated

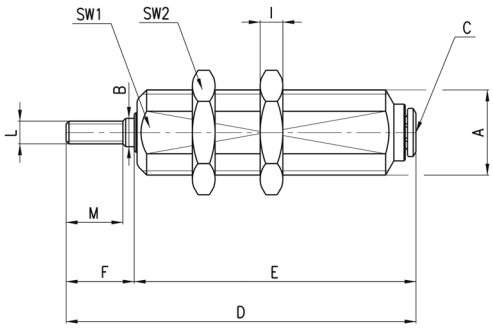

DIMENSIONS													
Mod.	Ø	STROKE	A	B	C	D	E	F	SW1	SW2	I	L	M
14N1A06B05	6	5	M10x1	3	4\2	38	29	9	9	12	3	M3x0,5	7
14N1A06B10	6	10	M10x1	3	4\2	46	37	9	9	12	3	M3x0,5	7
14N1A06B15	6	15	M10x1	3	4\2	51	42	9	9	12	3	M3x0,5	7
14N1A10B05	10	5	M15x1,5	5	4\2	50	38	12	13	19	4	M4x0,7	10
14N1A10B10	10	10	M15x1,5	5	4\2	57	45	12	13	19	4	M4x0,7	10
14N1A10B15	10	15	M15x1,5	5	4\2	62	50	12	13	19	4	M4x0,7	10
14N1A16B05	16	5	M22x1,5	6	4\2	53,5	39,5	14	20	27	5	M5x0,8	12
14N1A16B10	16	10	M22x1,5	6	4\2	62	48	14	20	27	5	M5x0,8	12
14N1A16B15	16	15	M22x1,5	6	4\2	67	53	14	20	27	5	M5x0,8	12

Compact minicylinders with non threaded piston rod Mod. 14N1M

Threaded port

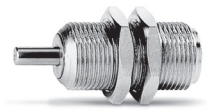

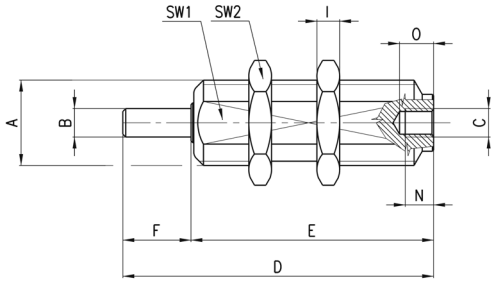

DIMENSIONS													
Mod.	Ø	STROKE	A	B	C	D	E	F	SW1	SW2	I	N	O
14N1M06A05	6	5	M10x1	3	M5	28	23	5	9	12	3	5	6
14N1M06A10	6	10	M10x1	3	M5	36	31	5	9	12	3	5	6
14N1M06A15	6	15	M10x1	3	M5	41	36	5	9	12	3	5	6
14N1M10A05	10	5	M15x1,5	5	M5	43	31	12	13	19	4	5	6
14N1M10A10	10	10	M15x1,5	5	M5	50	38	12	13	19	4	5	6
14N1M10A15	10	15	M15x1,5	5	M5	55	43	12	13	19	4	5	6
14N1M16A05	16	5	M22x1,5	6	M5	46,5	32,5	14	20	27	5	5	6
14N1M16A10	16	10	M22x1,5	6	M5	55,5	41,5	14	20	27	5	5	6
14N1M16A15	16	15	M22x1,5	6	M5	60,5	46,5	14	20	27	5	5	6

Compact minicylinders with threaded piston rod Mod. 14N1M

Threaded port

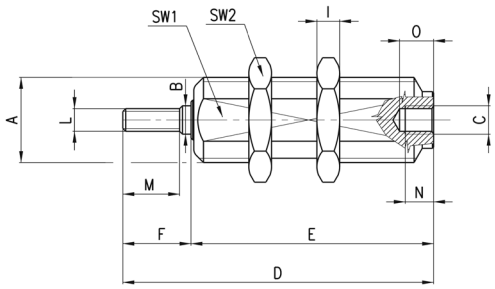

DIMENSIONS															
Mod.	Ø	STROKE	A	B	C	D	E	F	SW1	SW2	I	L	M	N	O
14N1M06B05	6	5	M10x1	3	M5	32	23	9	9	12	3	M3x0,5	7	5	6
14N1M06B10	6	10	M10x1	3	M5	40	31	9	9	12	3	M3x0,5	7	5	6
14N1M06B15	6	15	M10x1	3	M5	45	36	9	9	12	3	M3x0,5	7	5	6
14N1M10B05	10	5	M15x1,5	5	M5	43	31	12	13	19	4	M4x0,7	10	5	6
14N1M10B10	10	10	M15x1,5	5	M5	50	38	12	13	19	4	M4x0,7	10	5	6
14N1M10B15	10	15	M15x1,5	5	M5	55	43	12	13	19	4	M4x0,7	10	5	6
14N1M16B05	16	5	M22x1,5	6	M5	46,5	32,5	14	20	27	5	M5x0,8	12	5	6
14N1M16B10	16	10	M22x1,5	6	M5	55,5	41,5	14	20	27	5	M5x0,8	12	5	6
14N1M16B15	16	15	M22x1,5	6	M5	60,5	46,5	14	20	27	5	M5x0,8	12	5	6

Series 27 roundline cylinders

Double-acting, magnetic
ø 20, 25, 32, 40, 50, 63 mm

- Reduced dimensions
- Different mounting options
- Perfect alignment, perfect linearity

Series 27 has been designed to reduce the cylinders sizes as much as possible. These cylinders have been constructed with clean lines using stainless steel for both the tube and the rod and Aluminium for the end-blocks.

The choice of material and other design features have allowed to create a range of versatile and reliable cylinders. The precise method of securing the tube to the end block ensures that all the parts are perfectly aligned. Mechanical cushioning has been fitted on these cylinders in order to reduce noise produced by the piston impact on the end-blocks. Cylinders Series 27 are suitable for assembling with magnetic sensors. Various mounting bracket accessories enable the cylinders to be fitted to suit the requirements of a particular application.

GENERAL DATA

Type of construction	flanged
Operation	double acting
Materials	rod: Ø20 - 25 stainless steel AISI 303 - Ø32 ÷ 63 stainless steel AISI 420B tube: INOX AISI 304 piston and rod seals = PU
Mounting	feet - trunnion - steel bar - pins
Strokes min-max	all diameters 10 - 1000 mm
Bores	ø 20, 25, 32, 40, 50, 63
Operating temperature	0°C ÷ 80°C (with dry air - 20°C)
Operating pressure	1 ÷ 10 bar
Speed	10 ÷ 1000 mm/sec (no load)
Fluid	filtered air, without lubrication. If lubricated air is used, it is recommended to use oil ISOVG32. Once applied the lubrication should never be interrupted.

STANDARD STROKES FOR DOUBLE-ACTING CYLINDERS SERIES 27

Mod. 27M and 27T (ø 20 ÷ 40) and Mod. 27U (ø 20 ÷ 63)

STANDARD STROKES														
Ø	10	25	40	50	80	100	125	160	200	250	300	320	400	500
20	■	■	■	■	■	■	■	■	■	■	■	■	■	■
25	■	■	■	■	■	■	■	■	■	■	■	■	■	■
32	■	■	■	■	■	■	■	■	■	■	■	■	■	■
40	■	■	■	■	■	■	■	■	■	■	■	■	■	■
50	■	■	■	■	■	■	■	■	■	■	■	■	■	■
63	■	■	■	■	■	■	■	■	■	■	■	■	■	■

CODING EXAMPLE

27	M	2	A	20	A	0050

27	SERIES	
M	VERSION M = rear endblock with trunnion and upper round port for ø 20-25-32-40 T = rear endblock with rear round port for ø 20-25-32-40 U = rear endblock with upper round port for ø 20-25-32-40-50-63	
2	OPERATION 2 = double-acting	PNEUMATIC SYMBOL CD08
A	MATERIALS A = rolled stainless steel rod - stainless steel tube	
20	BORE 20 = 20 mm - 25 = 25 mm - 32 = 32 mm - 40 = 40 mm - 50 = 50 mm - 63 = 63 mm	
A	TYPE OF DESIGN A = standard	
0050	STROKE (see the table)	

PNEUMATIC SYMBOLS

The pneumatic symbols which have been indicated in the CODING EXAMPLE are shown below.

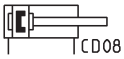

ACCESSORIES FOR MAGNETIC CYLINDERS SERIES 27

Coupling piece
Mod. GKF

Self aligning rod
Mod. GK

Threaded trunnion pin
Mod. T

Piston rod socket joint
Mod. GY

Swivel ball joint Mod. GA

Foot mount Mod. B

Foot mount Mod. B

Nose nut Mod. V

Rear trunnion bracket
Mod. I

Piston rod lock nut
Mod. U

Rear trunnion bracket
Mod. I

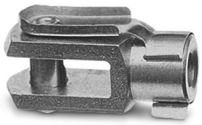

Rod fork end Mod. G

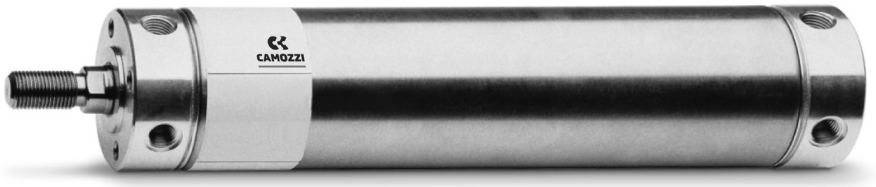

All accessories are supplied separately.

Cylinders Series 27 (Ø 20, 25, 32, 40)

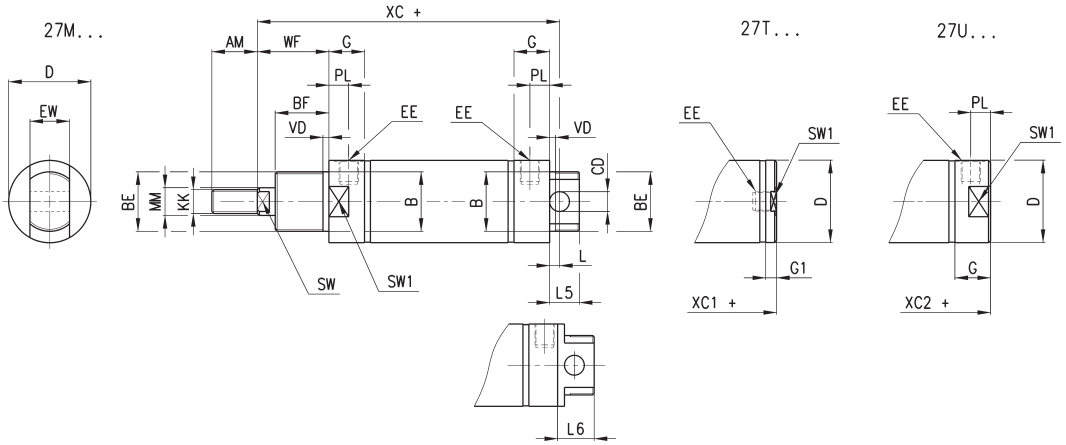

+ = add the stroke

DIMENSIONS																						
Ø	AM	øB	BF	BE	øCD(H9)	øD	EE	EW	G	G1	KK	L	L6	MM(h9)	L5	PL	SW	VD	WF	XC+	XC1+	XC2+	SW1
20	14	16	12	M16x1,5	6	21,5	G1\8	12	15,5	8	M8x1,25	7	-	8	13	9	7	3	17	77	62,5	70,8	19
25	16	18	12	M18x1,5	8	26,5	G1\8	14	15,5	8	M10x1,25	9	-	10	17	9	9	3	16,5	78,5	62	69,5	24
32	22	22	15	M22x1,5	8	33,5	G1\8	16	17,5	5,5	M10x1,25	7	20	12	15	9	10	3	23	93	74	86	30
40	23	30	15	M30x1,5	10	41,5	G1\8	20	18	5,5	M12x1,25	5	24	16	15	10	13	3	24	96	78,5	91	38

Cylinders Series 27 (Ø 50, 63)

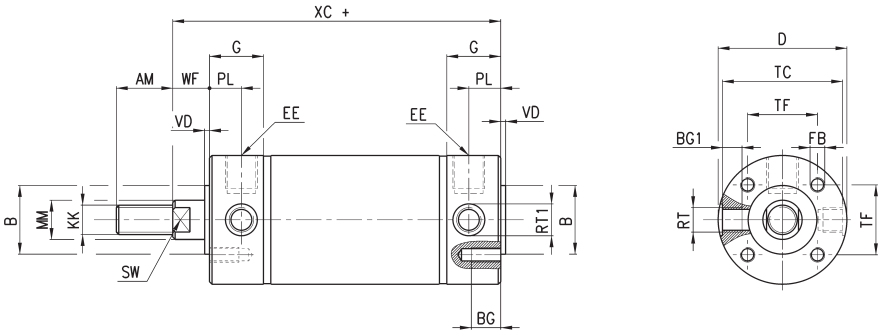

+ = add the stroke

DIMENSIONS																		
Ø	AM	øB	BG	BG1	øD	EE	FB	G	KK	øMM(h9)	PL	RT	øRT1	SW	TC	TF	VD	WF	XC +
50	23	28	12	8	52,5	G1\4	M6	22	M12x1,25	16	13	M10x1	12	13	49	28,5	2	13	97
63	30	35	12	9,5	65,5	G1\4	M8	22	M16x1,5	20	13	M12x1,5	14	17	62	35,5	2	13	99

Foot mount Mod. B

Material: zinc-plated steel

Supplied with:
1x foot
1x front end cap nut mod. V

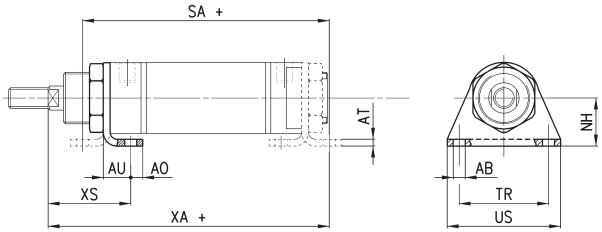

+ = add the stroke

DIMENSIONS										
Mod.	Ø	øAB	AO	AT	AU	NH	SA+	TR	US	XA+	XS
B-27-20	20	5,5	6	3	13	20	79	32	42	83	27
B-27-25	25	6,6	8	3	12,5	22	78	38	49	82	26
B-27-32	32	6,6	8	4	16	25	95	40	54	102	35
B-27-40	40	7	7	4	16	28	99	52	66	107	36

Foot mount Mod. B

Material: zinc-plated steel

Supplied with:
2x feet
4x screws

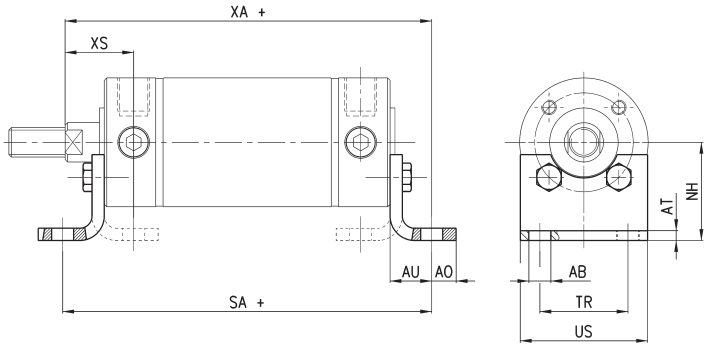

+ = add the stroke

DIMENSIONS										
Mod.	Ø	øAB	AO	AT	AU	NH	SA+	TR	US	XA+	XS
B-27-50	50	9	10	4	17	40	118	36	52	114	26
B-27-63	63	9	10	5	19	47	124	45	61	118	27

Threaded trunnion pin Mod. T

Material: stainless steel

Supplied with:
2x pins

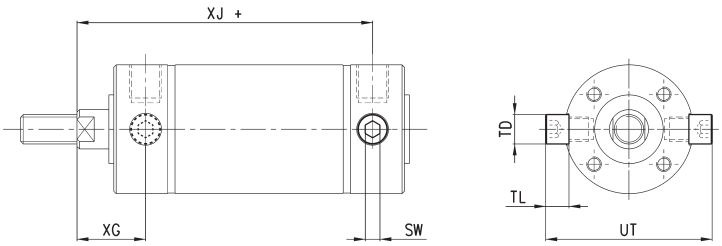

+ = add the stroke

DIMENSIONS							
Mod.	Ø	SW	øTD h9	TL	UT	XG	XJ+
T-27-50	50	6	12	9,5	68	26	84
T-27-63	63	6	14	11	84	26	86

Rear trunnion bracket Mod. I (Ø 20, 25, 32, 40)

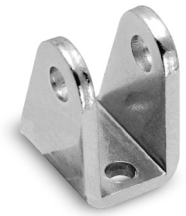

Material: zinc-plated steel

Supplied with:
1x female hinge
1x pin
2x Seeger

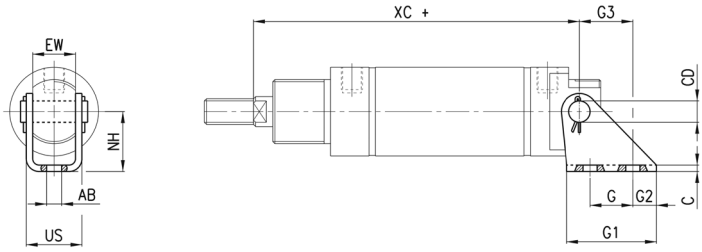

+ = add the stroke

DIMENSIONS												
Mod.	Ø	G	G1	G2	G3	C	XC+	øAB	US	NH	øCD	EW
I-27-20	20	15	30	8	18,5	1,5	77	5,5	15	20	6	12
I-27-25	25	15	33	9	20	2	78,5	6,6	18	22	8	14
I-27-32	32	15	35	10	20	2	93	6,6	20,5	25	8	16
I-27-40	40	20	42	11	25	3	96	7	26	28	10	20

Rear trunnion bracket Mod. I

Material: zinc-plated steel

Supplied with:
2x pins
2x feet

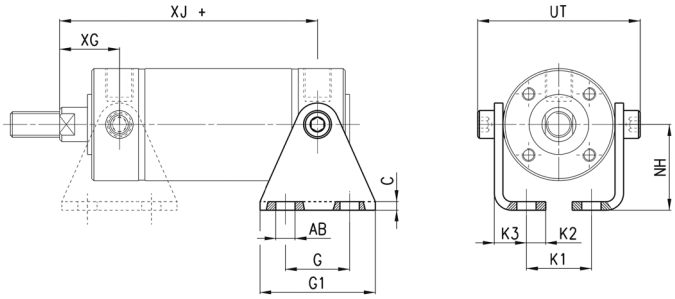

+ = add the stroke

DIMENSIONS													
Mod.	Ø	G	G1	C	XJ+	XG	øAB	K1	K1	K2	K3	NH	UT
I-27-50	50	30	54	4	84	26	9	9	30,5	9	15	40	68
I-27-63	63	40	64	5	86	26	9	9	40,5	9	17,5	47	84

Rod fork end Mod. G

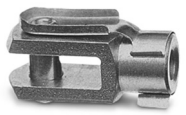

Material: zinc-plated steel
ISO 8140

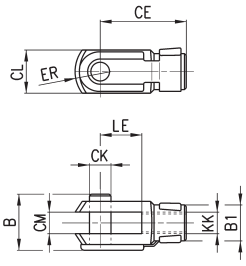

DIMENSIONS										
Mod.	Ø	øCK	LE	CM	CL	ER	CE	KK	B	øB1
G-20	20	8	16	8	16	10	32	M8x1,25	22	14
G-25-32	25-32	10	20	10	20	12	40	M10X1,25	26	18
G-40	40-50	12	24	12	24	14	48	M12X1,25	32	20
G-50-63	63	16	32	16	32	19	64	M16X1,5	40	26

Swivel ball joint Mod. GA

Material: zinc-plated steel
ISO 8139

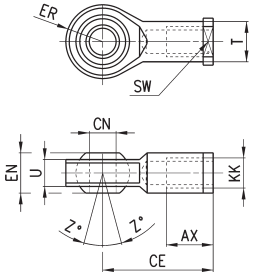

DIMENSIONS											
Mod.	Ø	øCN(H7)	U	EN	ER	AX	CE	KK	øT	Z	SW
GA-20	20	8	9	12	12	16	36	M8x1,25	12,5	6,5	14
GA-32	25-32	10	10,5	14	14	20	43	M10X1,25	15	6,5	17
GA-40	40-50	12	12	16	16	22	50	M12X1,25	17,5	6,5	19
GA-50-63	63	16	15	21	21	28	64	M16X1,5	22	7,5	22

Piston rod socket joint Mod. GY

Material: zama and zinc-plated steel

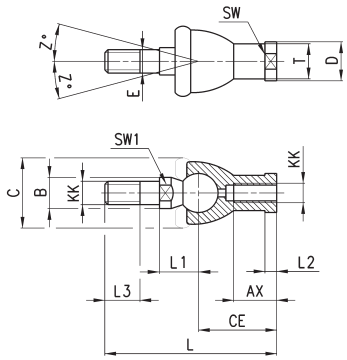

DIMENSIONS																
Mod.	Ø	KK	L	CE	L2	AX	E	øB	øC	T	D	L1	L3	SW1	SW	Z
GY-20	20	M8X1,25	65	32	5	16	8	12	24	12,5	16	16	12	10	14	15
GY-32	25-32	M10X1,25	74	35	6,5	18	10	14	28	15	19	19,5	15	11	17	15
GY-40	40-50	M12X1,25	84	40	6,5	20	12	19	32	17,5	22	21	17	17	19	15
GY-50-63	63	M16X1,5	112	50	8	27	16	22	40	22	27	27,5	23	19	22	11

Piston rod lock nut Mod. U

Material: zinc-plated steel
ISO 4035

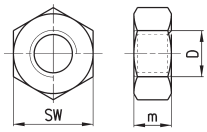

DIMENSIONS				
Mod.	Ø	D	m	SW
U-20	20	M8X1,25	5	13
U-25-32	20-32	M10X1,25	6	17
U-40	40-50	M12X1,25	7	19
U-50-63	63	M16X1,5	8	24

Nose nut Mod. V

ISO 4035
V-27-25 / V-42-32 not according standard.
Material: zinc-plated steel

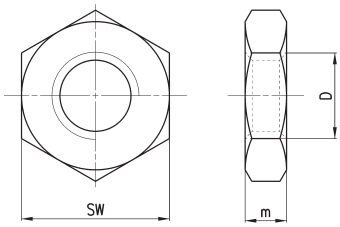

DIMENSIONS				
Mod.	Ø	D	m	SW
V-12-16	20	M16X1,5	8	24
V-27-25	25	M18X1,5	5	24
V-20-25	32	M22X1,5	10	32
V-42-32	40	M30x1,5	8	-

Self aligning rod Mod. GK

Material: zinc-plated steel

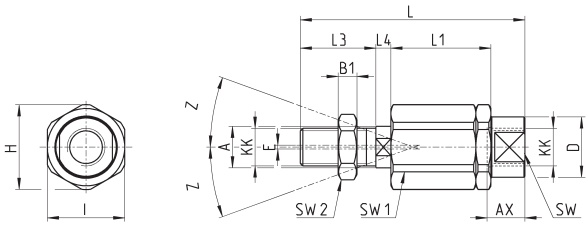

DIMENSIONS																	
Mod.	Ø	KK	L	L1	L3	L4	Ø A	Ø D	H	I	SW	SW1	SW2	B1	AX	Z	E
GK-20	20	M8x1,25	57	26	21	5	8	12,5	19	17	11	7	13	4	16	4	2
GK-25-32	25-32	M10x1,25	71,5	35	20	7,5	14	22	32	30	19	12	17	5	22	4	2
GK-40	40	M12x1,25	75,5	35	24	7,5	14	22	32	30	19	12	19	6	22	4	2
GK-50-63	50-63	M16x1,5	104	53	32	10	22	32	45	41	27	20	24	8	30	3	2

Coupling piece Mod. GKF

Material: zinc-plated steel

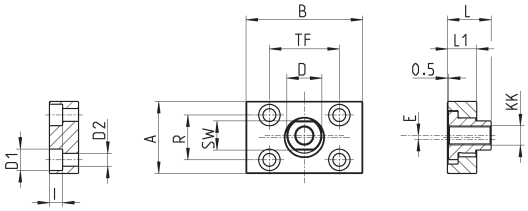

DIMENSIONS														
Mod.	Ø	KK	A	B	R	TF	L	L1	I	Ø D	Ø D1	Ø D2	SW	E
GKF-20	20	M8x1,25	30	35	20	25	22,5	10	-	14	5,5	-	13	1,5
GKF-25-32	25-32	M10x1,25	37	60	23	36	22,5	15	6,8	18	11	6,6	15	2
GKF-40	40	M12x1,25	56	60	38	42	22,5	15	9	20	15	9	15	2,5
GKF-50-63	50-63	M16x1,5	80	80	58	58	26,5	15	10,5	25	18	11	22	2,5

Series 42 cylinders

Single and double-acting, magnetic, cushioned
Ø 32, 40, 50, 63

» Perfect alignment
» Different mounting options

Series 42 cylinders have been designed without tie rods to assure an extremely clean design.
Stainless steel has been used for the tube and the rod, while the end cover is made in anodized Aluminium. These cylinders are normally equipped with adjustable end-stroke cushioning and with a mechanical cushioning in order to make the impact of the piston less noisy as it reaches the end of the stroke.

GENERAL DATA

Type of construction	compact - flanged
Operation	single-acting or double-acting
Materials	end-blocks = AL tube = stainless steel AISI 304 rod = stainless steel AISI 420B other parts (see coding)
Type of mounting	front flange, rear flange, feet, front and rear trunnion, threaded pins
Strokes min - max	10 - 1000 mm
Operating temperature	0 ÷ 80°C (with dry air -20°C)
Operating pressure	1 ÷ 10 bar (double-acting); 2 ÷ 10 bar (single-acting)
Speed	10 ÷ 1000 mm/sec (NO LOAD)
Fluid	clean air, without lubrication. If lubricated air is used, it is recommended to use oil ISOVG32. Once applied the lubrication should never be interrupted.

STANDARD STROKES FOR DOUBLE-ACTING CYLINDERS SERIES 42

✖ = Double acting
■ = Single acting

STANDARD STROKES														
Ø	25	50	75	80	100	125	150	160	200	250	300	320	400	500
32	✖ ■	✖ ■	✖ ■	✖	✖	✖	✖	✖	✖	✖	✖	✖	✖	✖
40	✖ ■	✖ ■	✖ ■	✖	✖	✖	✖	✖	✖	✖	✖	✖	✖	✖
50	✖ ■	✖ ■	✖ ■	✖	✖	✖	✖	✖	✖	✖	✖	✖	✖	✖
63	✖ ■	✖ ■	✖ ■	✖	✖	✖	✖	✖	✖	✖	✖	✖	✖	✖

CODING EXAMPLE

42	M	2	N	050	A	0200

42	SERIES	
M	VERSION M= standard magnetic	
2	OPERATION 1 = single-acting, cushions (front spring) 2 = double-acting, front and rear cushions 3 = double-acting, no cushion 4 = double-acting, rear cushions 5 = double-acting, front cushion 6 = double-acting, through-rod, front and rear cushions 7 = single-acting, through-rod, cushions	PNEUMATIC SYMBOLS CS12 CD09 CD08 CD10 CD11 CD13 CS13
N	MATERIALS N = stainless steel AISI 420B rod - stainless steel AISI 304 tube - NBR seals	
050	BORE 032 = 32 mm 040 = 40 mm 050 = 50 mm 063 = 63 mm	
A	TYPE OF DESIGN A = standard with nose nut Mod. V and piston rod lock nut Mod. U	
0200	STROKE (see the table)	

PNEUMATIC SYMBOLS

The pneumatic symbols which have been indicated in the CODING EXAMPLE are shown below.

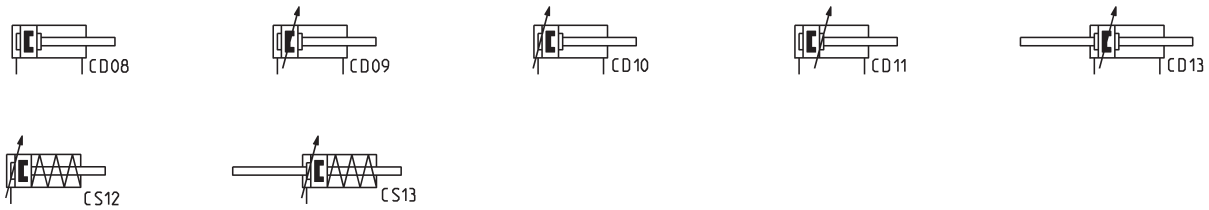

ACCESSORIES FOR CYLINDERS SERIES 42

Nose nut Mod. V

Coupling piece
Mod. GKF

Self aligning rod
Mod. GK

Piston rod socket joint
Mod. GY

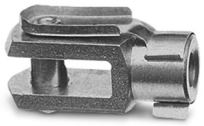

Rod fork end Mod. G

Foot mount Mod. P

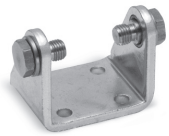

Trunnion Mod. I

Swivel ball joint Mod. GA

Brack threaded pins
Mod. T

Piston rod lock nut
Mod. U

All accessories are supplied separately, except for piston rod lock Mod. U and nose nut Mod. V.

Cylinders Series 42

N.B. : sizes L, L1 and L2 in single-acting cylinders are increased by 25 mm.

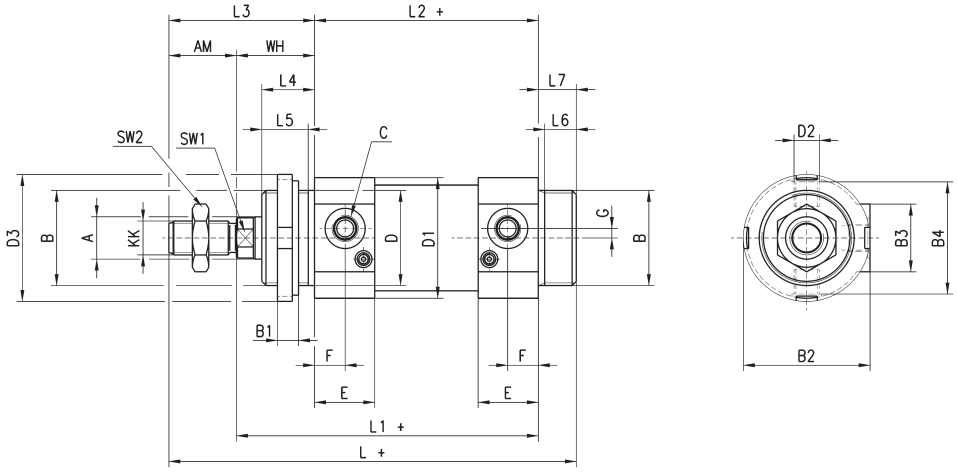

+ = add the stroke

* = front/rear cushion stroke

DIMENSIONS																											
Ø	A	KK	B	B1	B2	B3	B4	C	D[d11]	D1	D2	D3	E	F	G	SW1	SW2	AM	WH	L+	L1+	L2+	L3	L4	L5	L6	L7	*
32	12	M10x1.25	M30x1.5	8	41.5	28	36	G1\8	30	38	M8x1	42	23.5	10.5	5	10	17	22	26	156	120	94	48	18	15	11	14	17 / 12
40	16	M12x1.25	M38x1.5	10	50	30	43	G1\4	38	46	M10x1	50	29	15	5	13	19	24	30	175	135	105	54	22	19	13	16	20 / 17
50	20	M16x1.5	M45x1.5	10	58.5	32	54	G1\4	40	57	M12x1.5	60	28.5	14.5	4.5	17	24	32	37	193	143	106	69	25	22	15	18	15 / 14
63	20	M16x1.5	M45x1.5	10	70.5	46.5	66	G3\8	45	70	M14x1.5	60	35	15.5	7	17	24	32	37	208	158	121	69	25	22	15	18	17 / 16

Cylinders Series 42 - through-rod

Note: sizes L, L1 and L2 in single-acting cylinders are increased by 25 mm.

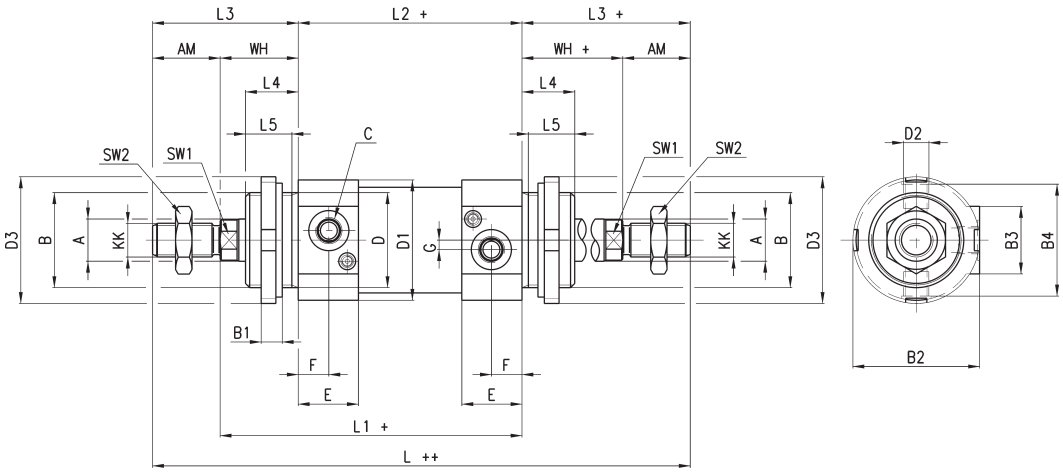

+ = add the stroke once
++ = add the stroke twice

* = front/rear cushion stroke

DIMENSIONS																										
Ø	A	KK	B	B1	B2	B3	B4	C	D	D1	D2	D3	E	F	G	SW1	AM	SW2	WH+	L++	L1+	L2+	L3+	L4	L5	*
32	12	M10x1.25	M30x1.5	8	41.5	28	36	G1\8	30	38	M8x1	42	23.5	10.5	5	10	22	17	26	190	120	94	48	18	15	17 / 12
40	16	M12x1.25	M38x1.5	10	50	30	43	G1\4	38	46	M10x1	50	29	15	5	13	24	19	30	213	135	105	54	22	19	20 / 17
50	20	M16x1.5	M45x1.5	10	58.5	32	54	G1\4	45	57	M12x1.5	60	28.5	14.5	4.5	17	32	24	37	244	143	106	69	25	22	15 / 14
63	20	M16x1.5	M45x1.5	10	70.5	46.5	66	G3\8	45	70	M14x1.5	60	35	15.5	7	17	32	24	37	259	158	121	69	25	22	17 / 16

Foot mount Mod. P

Material: zinc-plated steel.

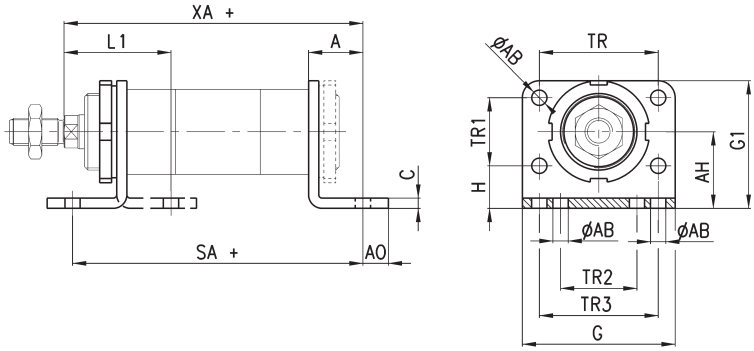

Supplied with:
1x nut
2x single feet

+ = add the stroke

DIMENSIONS																
Mod.	Ø	L1	SA +	XA +	A	AB	AO	AH	C	G	G1	TR	TR1	TR2	TR3	H
P-42-32	32	46	142	144	24	7	11	32	4	66	53	52	28	32	52	18
P-42-40	40	53	161	163	28	9	15	36	5	80	61	60	30	36	60	21
P-42-50	50	63	170	175	32	9	15	45	6	90	75	70	40	45	70	25
P-42-63	63	63	185	190	32	9	10	50	6	96	85	76	50	50	76	25

Trunnion Mod. I

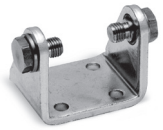

Material: zinc-plated steel.

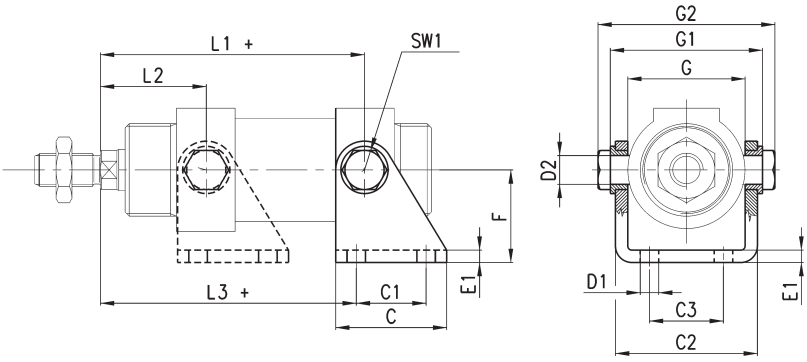

Supplied with:
1x nut
2x single feet

+ = add the stroke

DIMENSIONS																
Mod.	Ø	L1 +	L2	L3 +	C	C1	C2	C3	D1	D2	E1	F	SW1	G	G1	G2
I-42-32	32	109,5	36,5	105,5	40	24	46,1	20	7	10	4	35	13	38,1	50,1	58,1
I-42-40	40	120	45	117	50	30	56,1	28	9	12	5	40	17	46,1	60,1	70,1
I-42-50	50	128,5	51,5	124,5	54	34	69,1	36	9	14	6	45	19	57,1	74,1	86,1
I-42-63	63	143	52	142	65	35	82,1	42	9	16	6	50	19	70,1	88,1	100,1

Bracket with threaded pins Mod. T

Material: stainless steel

Supplied with:
2x pins

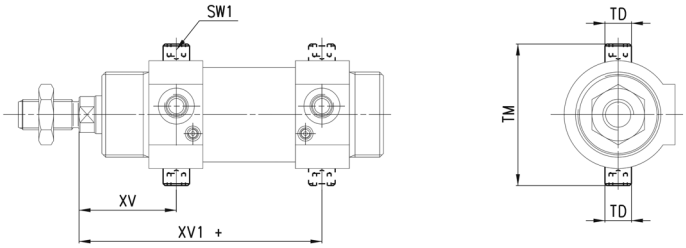

+ = add the stroke

DIMENSIONS						
Mod.	Ø	XV	XV1+	TD	TM	SW1
T-42-32	32	36,5	109,5	10	51	5
T-42-40	40	45	120	12	61	6
T-42-50	50	51,5	128,5	14	75	6
T-42-63	63	52	143	16	90	8

Nose nut Mod.V-42

Material: zinc-plated steel

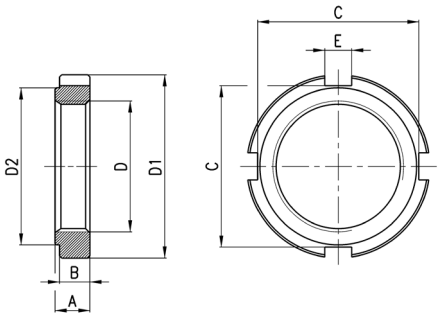

DIMENSIONS								
Mod.	Ø	D	D1	D2	A	B	C	E
V-42-32	32	M30X1,5	42	36	8	7	37	6,2
V-42-40	40	M38x1,5	50	48	10	9	44	7,2
V-42-50-63	50-63	M45x1,5	60	56	10	9	53	7,2

Rod fork end Mod. G

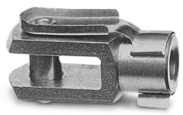

Material: stainless steel
ISO 8140

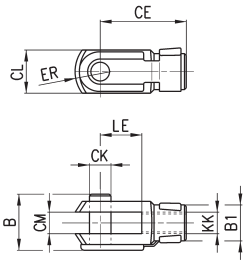

DIMENSIONS										
Mod.	Ø	ØCK	LE	CM	CL	ER	CE	KK	B	B1
G-25-32	32	10	20	10	20	12	40	M10X1,25	26	18
G-40	40	12	24	12	24	14	48	M12X1,25	32	20
G-50-63	50-63	16	32	16	32	19	64	M16X1,5	40	26

Piston rod lock Mod. U

UNI EN ISO 4035

Material: zinc-plated steel

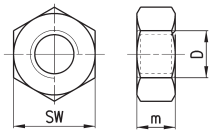

DIMENSIONS				
Mod.	Ø	D	m	SW
U-25-32	32	M10X1,25	6	17
U-40	40	M12X1,25	7	19
U-50-63	50-63	M16X1,5	8	24

Swivel ball joint Mod. GA

Material: zinc-plated steel
ISO 8139

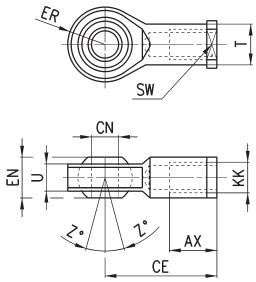

DIMENSIONS											
Mod.	Ø	øCN	U	EN	ER	AX	CE	KK	T	Z	SW
GA-32	32	10	10,5	14	14	20	43	M10X1,25	15	6,5	17
GA-40	40	12	12	16	16	22	50	M12X1,25	17,5	6,5	19
GA-50-63	50-63	16	15	21	21	28	64	M16X1,5	22	7,5	22

Piston rod socket joint Mod. GY

Material: zama and zinc-plated steel

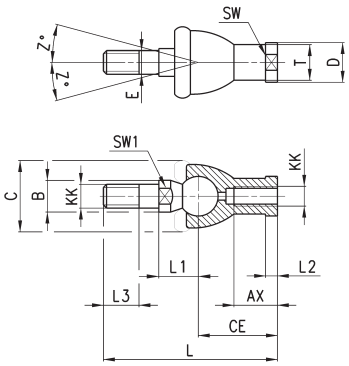

DIMENSIONS															
Mod.	Ø	KK	L	CE	L2	AX	SW	SW1	L1	L3	øT	øD	E	øB	øC	Z
GY-32	32	M10x1,25	74	35	6,5	18	17	11	19,5	15	15	19	10	14	28	15
GY-40	40	M12x1,25	84	40	6,5	20	19	17	22	17	17,5	22	12	19	32	15
GY-50-63	50-63	M16x1,5	112	50	8	27	22	19	27,5	23	22	27	16	22	40	11

Self aligning rod Mod. GK

Material: zinc plated steel

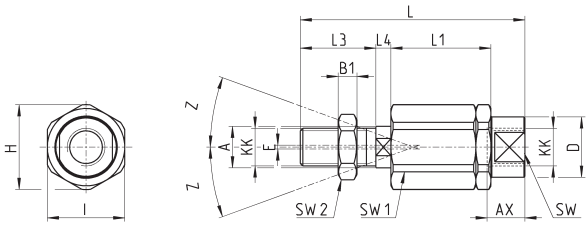

DIMENSIONS																	
Mod.	Ø	KK	L	L1	L3	L4	Ø A	Ø D	H	I	SW	SW1	SW2	B1	AX	Z	E
GK-25-32	32	M10x1,25	71,5	35	20	7,5	14	22	32	30	19	12	17	5	22	4	2
GK-40	40	M12x1,25	75,5	35	24	7,5	14	22	32	30	19	12	19	6	22	4	2
GK-50-63	50-63	M16x1,5	104	53	32	10	22	32	45	41	27	20	24	8	30	3	2

Coupling piece Mod. GKF

Material: zinc plated steel

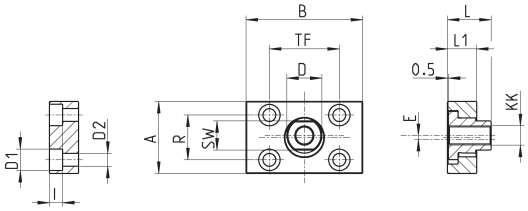

DIMENSIONS													
Mod.	Ø	KK	A	B	R	TF	L	L1	I	ØD	ØD1	ØD2	SW	E
GKF-25-32	32	M10x1,25	37	60	23	36	22,5	15	6,8	18	11	6,6	15	2
GKF-40	40	M12x1,25	56	60	38	42	22,5	15	9	20	15	9	15	2,5
GKF-50-63	50-63	M16x1,5	80	80	58	58	26,5	15	10,5	25	18	11	22	2,5

Series 69 rotary cylinders

Magnetic, cushioned
ø 32, 40, 50, 63, 80, 100, 125 mm
Rotational angles: 90°, 180°, 270° and 360°

» Male or female version

» Clean design

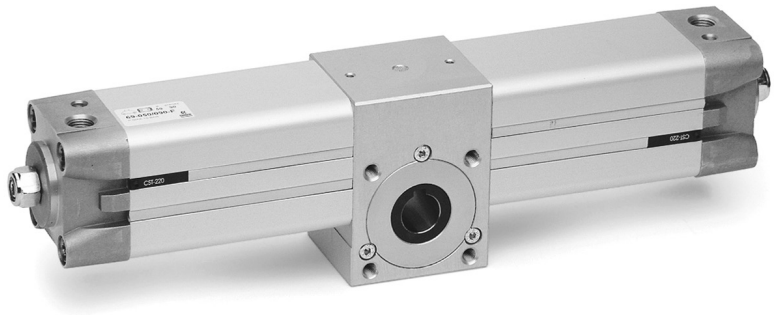

Through an adjustment screw it is possible to recover part of the play between pinion and rack.
On the heads there is a screw which allows rotation to be adjusted by ± 5°.

Series 69 rotary cylinders are available in 7 different bores and can satisfy a large range of operational requirements.

GENERAL DATA

Type of construction	with internal tie-rods
Operation	double-acting
Materials	end blocks / tube / body = AL rack = steel rack guide shoe = acetal resin pinion = hardened steel seals = NBR
Type of mounting	threaded holes in the central body by means of brackets for ISO 15552 cylinders
Bore	ø 32, 40, 50, 63, 80, 100, 125
Operating temperature	0°C ÷ 80°C (with dry air - 20°C)
Standard rotation angles	90°, 180°, 270°, 360° (others on request)
Bearings	Ball bearings (ø 32 mm teflon bronze guide)
Operating pressure	1 ÷ 10 bar
Fluid	filtered air class 7.8.4 according to ISO 8573-1. If lubricated air is used, it is recommended to use oil ISOVG32. Once applied the lubrication should never be interrupted

TABLE OF TORQUE FORCE IN Nm (THEORETICAL)

Ø	1 bar	2 bar	3 bar	4 bar	5 bar	6 bar	7 bar	8 bar	9 bar	10 bar
32	1,2	2,4	3,6	4,8	6	7,2	8,4	9,6	10,8	12
40	2,25	4,5	6,75	9	11,25	13,5	15,75	18	20,25	22,5
50	3,9	7,8	11,7	15,6	19,5	23,4	27,3	31,2	35,1	39
63	7,3	14,6	21,9	29,2	36,5	43,8	51,1	58,4	65,7	73
80	15,7	31,4	47,1	62,8	78,5	94,2	109,9	125,6	141,3	157
100	26,35	52,7	79,05	105,4	131,75	158,1	184,45	210,8	237,15	263,5
125	51	102	153	204	255	306	357	408	459	510

CODING EXAMPLE

69	-	050	/	090	-	F	

69	SERIES	PNEUMATIC SYMBOL CD18
050	BORE 032 = 32 mm 040 = 40 mm 050 = 50 mm 063 = 63 mm 080 = 80 mm 100 = 100 mm 125 = 125 mm	
090	ROTATIONAL ANGLES 090 = 90° 180 = 180° 270 = 270° 360 = 360°	
F	PINION F = Female M = Male	
	SEALS MATERIAL: = NBR W = FKM + 130°C	

PNEUMATIC SYMBOLS

The pneumatic symbols which have been indicated in the CODING EXAMPLE are shown below.

MAXIMUM ADMISSIBLE LOADS AND FORCES

	Ø 32	Ø 40	Ø 50	Ø 63	Ø 80	Ø 100	Ø 125
Maximum axial load F with F1 = 0	100 N	100 N	120 N	120 N	200 N	250 N	300 N
Maximum angular speed ω (rad/s)	66 (rad/s)	55 (rad/s)	49 (rad/s)	42 (rad/s)	31 (rad/s)	29 (rad/s)	23 (rad/s)
Maximum cushionable kinetic energy (J) calculated as $E = \frac{1}{2} \cdot J \cdot \omega^2$	0.8 (J)	1.4 (J)	2.1 (J)	4.0 (J)	7.5 (J)	9.0 (J)	15 (J)

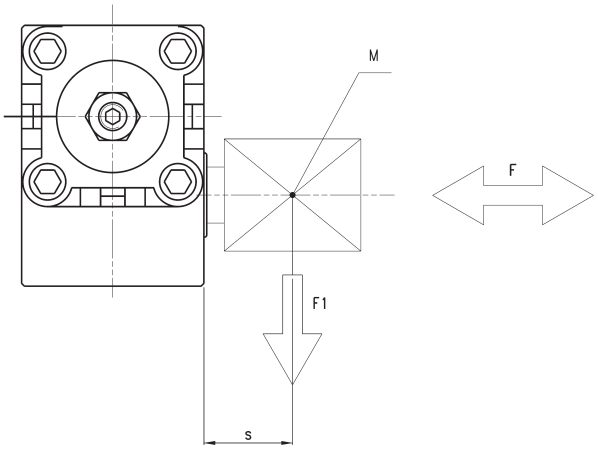

M = Center of gravity of the applied theoretical load
F = Axial load (N)
F1 = Radial load (N)

s = distance between actuator and center of gravity of the applied theoretical load (mm)

CHOICE AND CHECK OF THE ACTUATOR TO BE USED

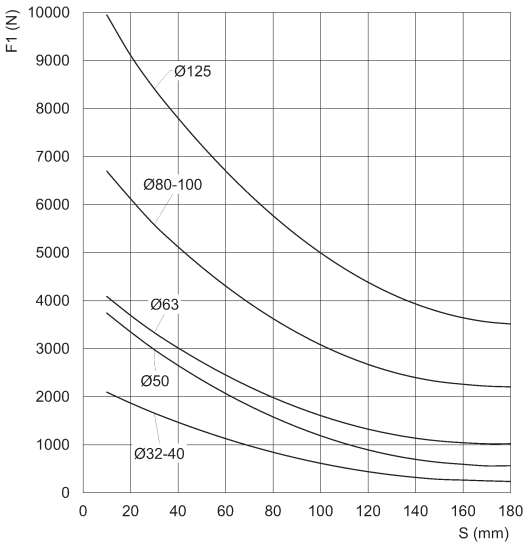

Max. radial load F1 with F = 0
S = distance between actuator and center of gravity of the applied theoretical load (mm)

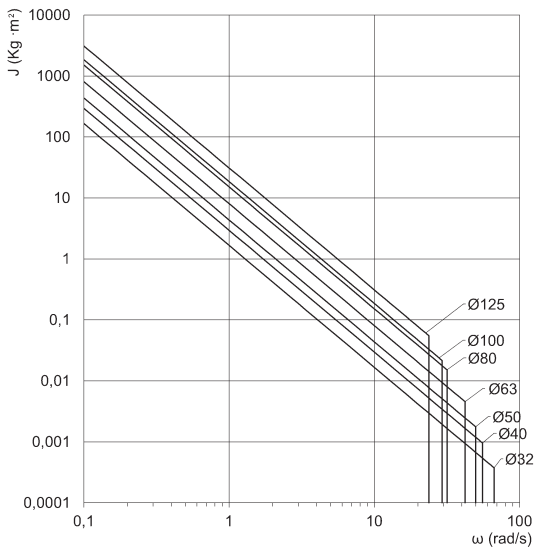

Maximum energy that can be cushioned according to the angular speed.
J = Moment of inertia (Kg · m²)
ω = Angular speed (rad/s)

Series 69 cylinders - male pinion

* increase in "A" and "Z" for each 90° of rotation

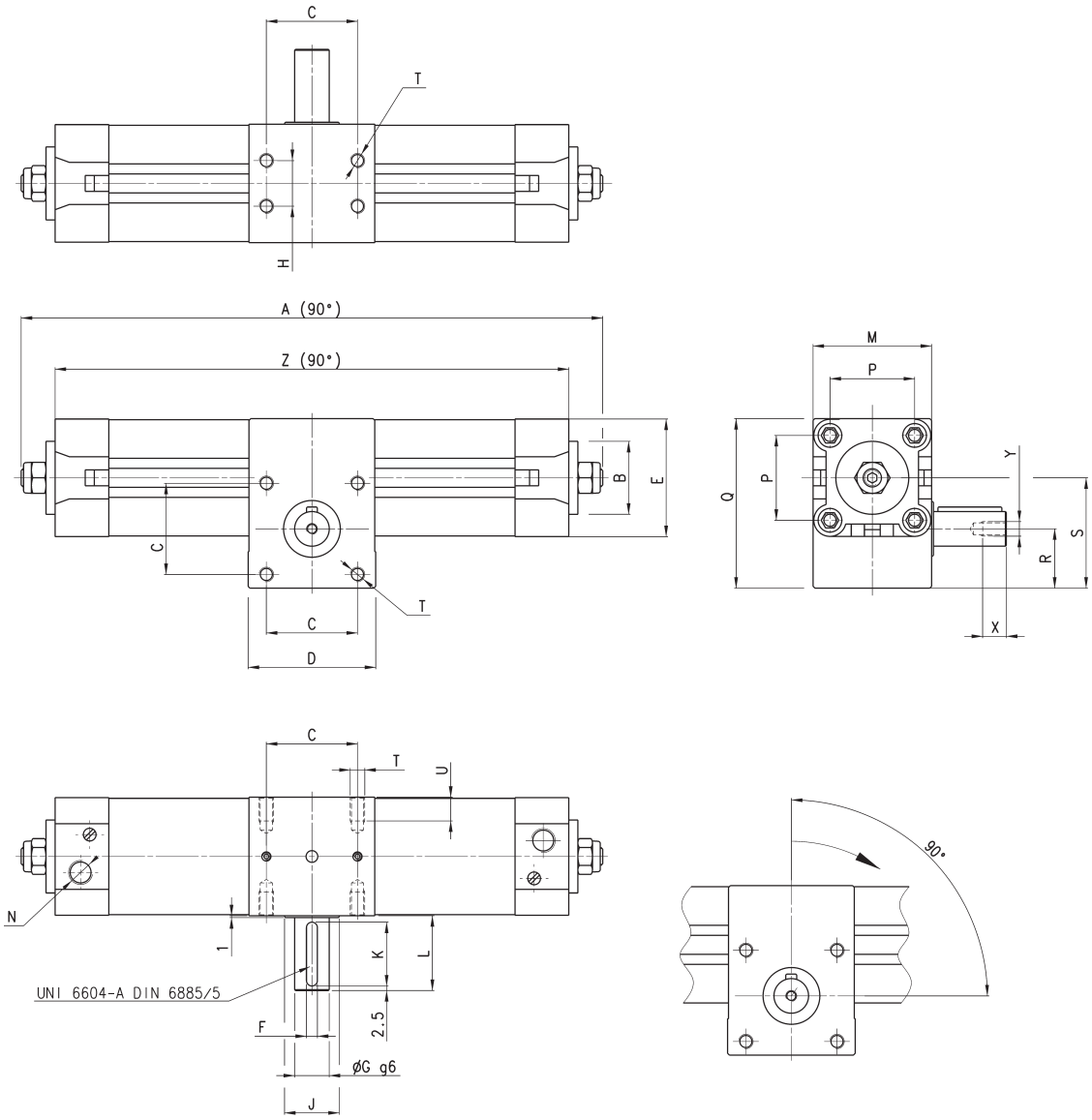

DIMENSIONS																							
Ø	A	B	*	C	D	E	F	G	H	J	K	L	M	N	P	Q	R	S	T	U	Y	X	Z
32	249	30	47	33	50	46	5	14	18	25	25	31	50	G1/8	32,5	71,5	25	46,5	M6	10	M5	12,5	219
40	295	35	56,5	40	60	55	5	14	22	25	25	31	60	G1/4	38	82	30	54,5	M6	10	M5	12,5	263
50	316	40	63	50	70	64,5	6	19	25	30	35	41	65	G1/4	46,5	94	32,5	60,5	M8	13	M6	16	282
63	357	45	74,5	60	75	75	8	24	35	30	35	41	75	G3/8	56,5	110	37	70,8	M8	13	M8	19	325
80	443	45	99	80	99	93	8	28	50	45	45	51	99	G3/8	72	142	50	93,5	M10	16	M8	19	404
100	472	55	107	80	115	110	10	38	60	50	45	51	115	G1/2	89	156,5	54	99	M10	16	M10	22	434
125	549	60	132	90	125	135	10	38	70	60	45	51	140	G1/2	110	188	60	118	M12	20	M10	22	505

Series 69 cylinders - female pinion

* increase in "A" and "Z" for each 90° of rotation

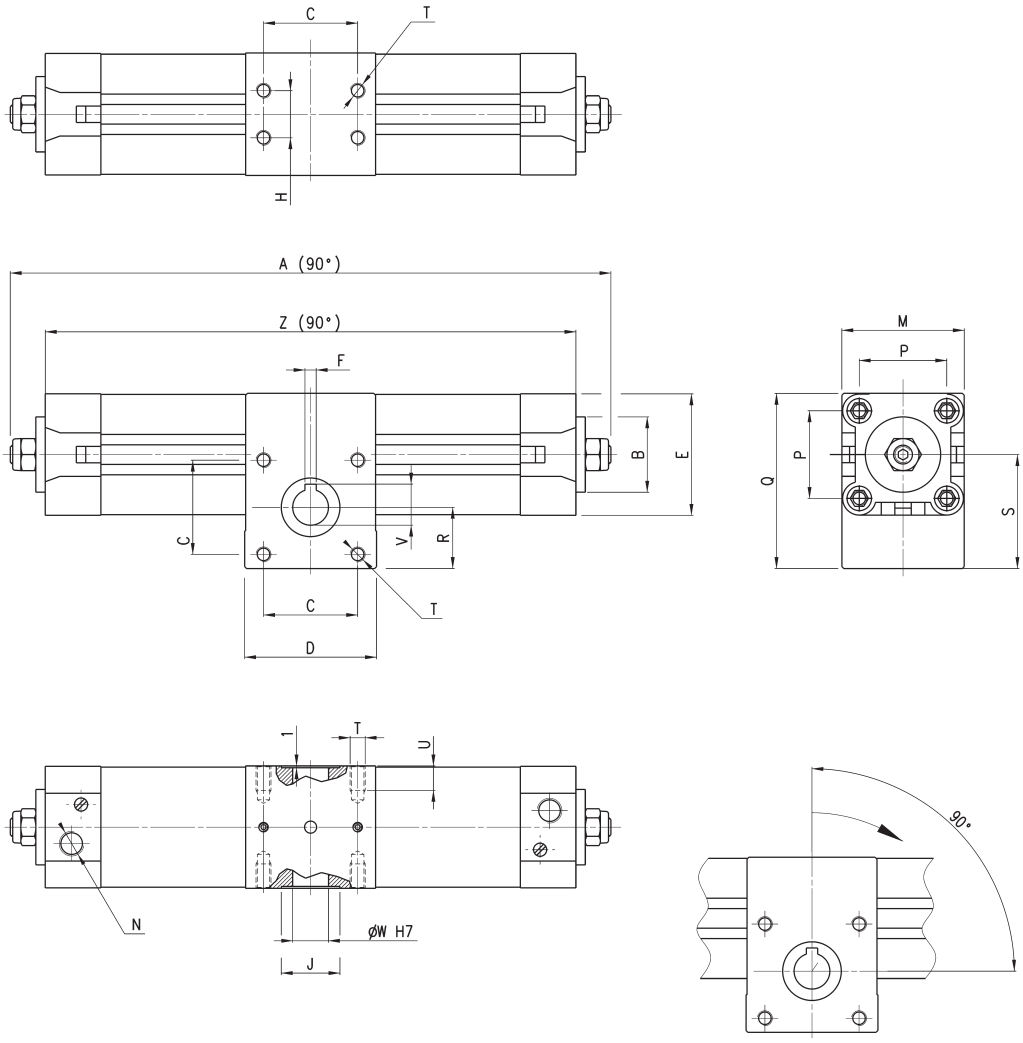

DIMENSIONS																				
Ø	A	B	*	C	D	E	F	H	J	M	N	P	Q	R	S	T	U	V	W	Z
32	249	30	47	33	50	46	5	18	25	50	G1/8	32,5	71,5	25	46,5	M6	10	16,3	14	219
40	295	35	56,5	40	60	55	5	22	25	60	G1/4	38	82	30	54,5	M6	10	16,3	14	263
50	316	40	63	50	70	64,5	6	25	30	65	G1/4	46,5	94	32,5	60,5	M8	13	21,8	19	282
63	357	45	74,5	60	75	75	6	35	30	75	G3/8	56,5	110	37	70,8	M8	13	21,8	19	325
80	443	45	99	80	99	93	8	50	45	99	G3/8	72	142	50	93,5	M10	16	27,3	24	404
100	472	55	107	80	115	110	8	60	50	115	G1/2	89	156,5	54	99	M10	16	31,3	28	434
125	549	60	132	90	125	135	8	70	60	140	G1/2	110	188	60	118	M12	16	31,3	28	505

Series 30 rotary cylinders

Non magnetic, cushioned and not cushioned
ø 50, 63, 80, 100 mm
Rotational angles: 90° and 180°

Series 30 rotary cylinders are made of a special Aluminium profile.
Their compact dimensions and clean lines give a good aesthetic appearance.
A unique wear resistant guide block gives increased service life to the unit.

Positioning gears are provided for the rotations.
On the heads there is a screw which allows rotation to be adjusted by ± 5°.

GENERAL DATA

Type of construction	profile
Operation	double acting
Materials	aluminium profile body & end blocks - NBR seals - other parts - hardened steel
Mounting	by means of holes in body
Bore	ø 50 - 63 - 80 - 100
Installation	in any position
Working temperature	0°C ÷ 50°C (- 20°C on dry air)
Standard rotation	90° - 180°
Operating pressure	0.5 ÷ 10 bar
Fluid	clean air with or without lubrication

TABLE OF TORQUE FORCE IN Nm (THEORETICAL)

Ø	1 bar	2 bar	3 bar	4 bar	5 bar	6 bar	7 bar	8 bar	9 bar	10 bar
50	2,08	4,16	6,24	8,32	10,40	12,48	14,55	16,63	18,71	20,79
63	4,40	8,80	13,20	17,61	22,01	26,41	30,81	35,21	39,61	44,01
80	7,10	14,19	21,29	28,39	35,49	42,58	49,68	56,78	63,87	70,97
100	16,63	33,27	49,90	66,54	83,17	99,80	116,44	133,07	149,07	166,34

CODING EXAMPLE

30	-	050	/	090	-	3

30	SERIES	PNEUMATIC SYMBOL CD17
050	BORE 050 = 50 mm 063 = 63 mm 080 = 80 mm 100 = 100 mm	
090	ROTATIONAL ANGLES 090 = 90° 180 = 180°	
3	VERSION: = cushioned 3 = not cushioned	

PNEUMATIC SYMBOLS

The pneumatic symbols which have been indicated in the CODING EXAMPLE are shown below.

Series 30 rotary cylinders - cushioned

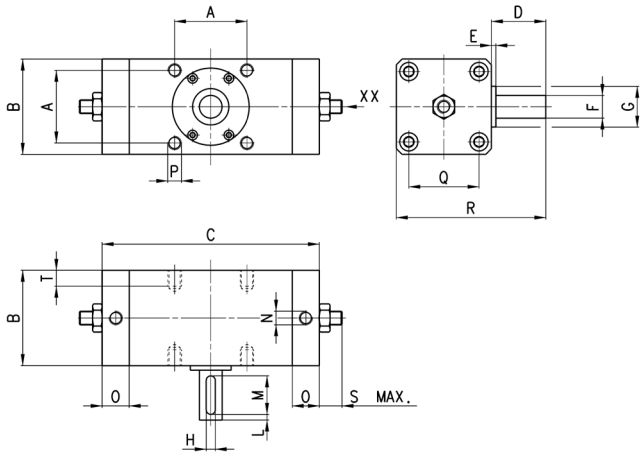

XX = Screw for stroke regulation

DIMENSIONS																	
Mod.	A	B	C	D	E	F h7	G	H	L	M	N	O	P	Q	R	S	T
30-050/090	48	62	162	36	2.5	15	25	5	5	25	G1/8	23	M8 x 1.25	46	98	8	8
30-063/090	60	76	186	41	2.5	17	32	6	5	30	G1/8	24	M10 x 1.5	57	117	8	12
30-080/090	72	92	195	50	3	20	35	6	5	35	G1/4	23.5	M12 x 1.75	70	142	9	13
30-100/090	85	112	247	60	4	25	40	8	5	40	G3/8	26	M12 x 1.75	85	172	9	14
30-050/180	48	62	199	36	2.5	15	25	5	5	25	G1/8	26	M8 x 1.25	46	98	8	8
30-063/180	60	76	237	41	2.5	17	30	6	5	30	G1/8	24	M10 x 1.5	57	117	8	12
30-080/180	72	92	245	50	3	20	35	6	5	35	G1/4	23.5	M12 x 1.75	70	142	9	13
30-100/180	85	112	313	60	4	25	40	8	5	40	G3/8	26	M12 x 1.75	85	172	9	14

Series 30 rotary cylinders - not cushioned

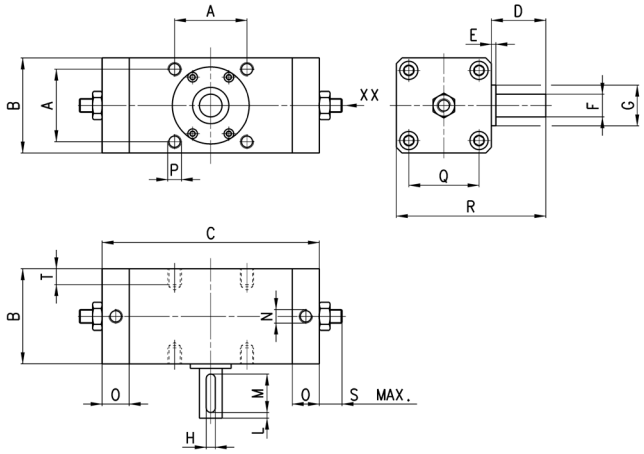

XX = Screw for stroke regulation

DIMENSIONS																	
Mod	A	B	C	D	E	F h7	G	H	L	M	N	O	P	Q	R	S	T
30-050/090-3	48	62	150	36	2.5	15	25	5	5	25	G1/8	17	M8 x 1.25	46	98	8	8
30-063/090-3	60	76	172	41	2.5	17	32	6	5	30	G1/8	17	M10 x 1.5	57	117	8	12
30-080/090-3	72	92	191	50	3	20	35	6	5	35	G1/4	21.5	M12 x 1.75	70	142	9	13
30-100/090-3	85	112	245	60	4	25	40	8	5	40	G3/8	25	M12 x 1.75	85	172	9	14
30-050/180-3	48	62	187	36	2.5	15	25	5	5	25	G1/8	17	M8 x 1.25	46	98	8	8
30-063/180-3	60	76	233	41	2.5	17	32	6	5	30	G1/8	17	M10 x 1.5	57	117	8	12
30-080/180-3	72	92	241	50	3	20	35	6	5	35	G1/4	21.5	M12 x 1.75	70	142	9	13
30-100/180-3	85	112	311	60	4	25	40	8	5	40	G3/8	25	M12 x 1.75	85	172	9	14

Series ARP rotary actuators

Model: "Rack & Pinion"
Sizes: 1, 3, 5, 10, 12, 20, 35, 55, 70, 100, 150, 250, 400
Rotational angles: 90°

- ATEX certified product
- Wide range of available sizes
- Air connections in accordance with Namur VDI/VDE 3845 drilling
- Interface drilling of the process valve in accordance with ISO 5211 standard

Series ARP rotary actuators have been designed to meet the high demands by the process industry, where they predominantly are used for controlling the opening and closing process valves whereas ball valves and butterfly valves are the most common types.

The actuators exist in thirteen different sizes in order to cover a wide range of applications. Through adjusting screws located on the end caps it is possible to mechanically adjust the opening/closing angle by ±5°.
All Series ARP rotary actuators are ATEX certified, the air connections are realized in accordance with Namur VDI/VDE 3845 drilling, while the interface drilling of the process valve is in accordance with ISO 5211 standard.

GENERAL DATA

Type of construction	Rack and pinion type
Operation	spring return (single-acting), double-acting
Materials	extruded AL-profile body (pressure diecasted anodized AL body for mod. ARP400) pressure diecasted AL end caps and pistons / racks (end caps in technopolymer for mod. ARP001) zinc-plated steel pinion - POM guide parts - NBR seals
Sizes	001, 003, 005, 010, 012, 020, 035, 055, 070, 100, 150, 250, 400
Operating temperature	- 30°C ÷ 100°C
Rotation angle	90°
Type of mounting	direct to the flange of the valve through screws and bolts, or through mounting kits consisting of bracket and adaptor pin*
Operating pressure	2 ÷ 10 bar
Fluid	filtered air without lubrication. If lubricated air is used, it is recommended to use oil ISOVG32. Once applied the lubrication should never be interrupted.
Available spare part kits	- kits which include sliding parts and seals; - kits containing springs for transforming an actuator from double-acting to single-acting with spring return.
Certification	ATEX

* Bracket and adaptor pin is not supplied by Camozzi

CODING EXAMPLE

ARP	-	003	-	1A	A	-	F0300	-	A	EX

ARP	SERIES	
003	SIZE 001 = torque force 9 Nm (only double effect) 003 = torque force 24 Nm 005 = torque force 50 Nm 010 = torque force 100 Nm 012 = torque force 120 Nm 020 = torque force 200 Nm 035 = torque force 370 Nm 055 = torque force 597 Nm 070 = torque force 825 Nm 100 = torque force 1122 Nm 150 = torque force 1655 Nm 250 = torque force 2648 Nm 400 = torque force 4800 Nm	
1A	OPERATION 1A = single-acting, minimum pressure of 4 bar 1B = single-acting, minimum pressure of 5 bar 1C = single-acting, minimum pressure of 5,5 bar 1D = single-acting, minimum pressure of 6 bar 2A = double-acting	PNEUMATIC SYMBOLS: CD19 / CD21 CD19 / CD21 CD19 / CD21 CD19 / CD21 CD17
A	ROTATION ANGLE A = 90°	
F0300	INTERFACE FOR FLANGE (ISO 5211) F0300 = F03 flange and 9mm square holes F0305 = F03 flange holes + F05 flange and 9mm square holes F0400 = F04 flange and 11mm square holes F0507 = F05 flange holes + F07 flange and 14mm square holes F0705 = F07 flange holes + F05 flange and 17mm square holes F0710 = F07 flange holes + F10 flange and 17mm square holes F1007 = F10 flange holes + F07 flange and 22mm square holes F1210 = F12 flange holes + F10 flange and 27mm square holes F1400 = F14 flange and 36mm square holes F1600 = F16 flange and 46mm square holes F2516 = F25 flange + F16 flange and 55mm square holes	
A	MATERIALS A = standard anodized C = CNI Kanigen type nickel-plating W = all FKM seals (130°C)	
EX	ATEX certified product	

PNEUMATIC SYMBOLS

The pneumatic symbols which have been indicated in the CODING EXAMPLE are shown below.

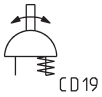

TORQUE FORCE DIAGRAM GENERATED BY A DOUBLE-ACTING ACTUATOR

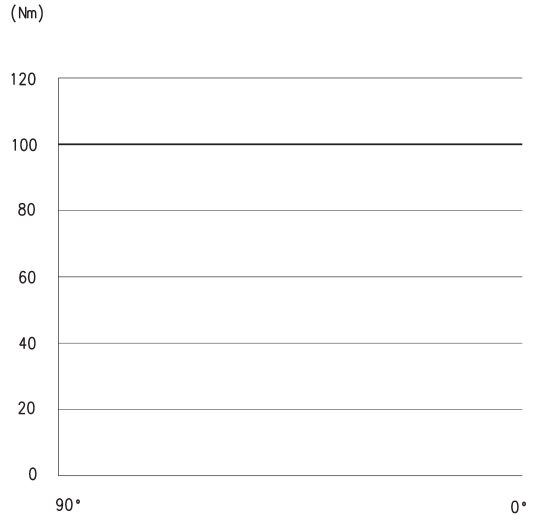

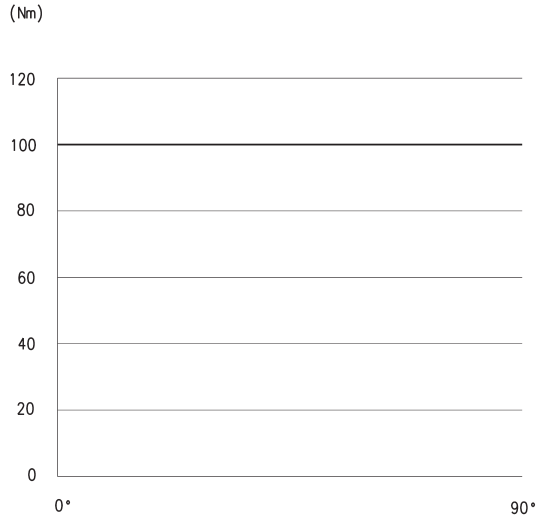

The above graph shows the torque force (in Nm) generated by a double-acting rotary actuator Series ARP during the closing action. The action starts from the 90° position and finishes at 0°. One of the features/advantages with a "rack and pinion" style rotary actuator is that the generated torque force is constant throughout the whole movement.
See also the TORQUE FORCE TABLE on the following page.

The above graph shows the torque force (in Nm) generated by a double-acting rotary actuator Series ARP during the opening action. The action starts from the 0° position and finishes at 90°. One of the features/advantages with a "rack and pinion" style rotary actuator is that the generated torque force is constant throughout the whole movement.
See also the TORQUE FORCE TABLE on the following page.

TORQUE FORCE DIAGRAM GENERATED BY A SINGLE-ACTING ACTUATOR

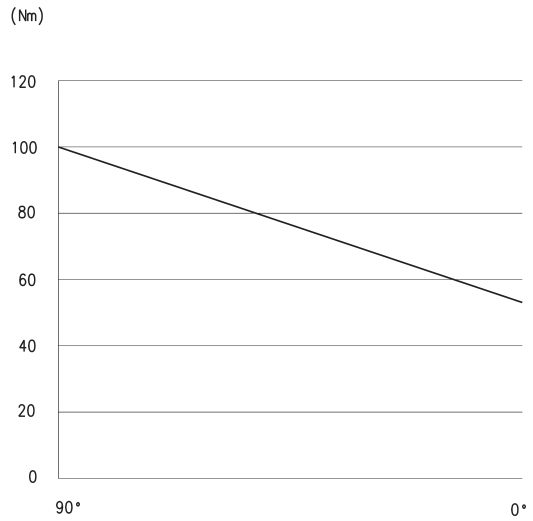

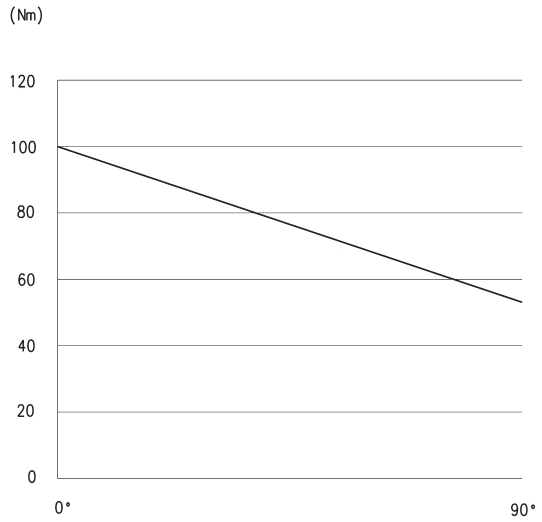

The above graph shows the torque force (in Nm) generated by a single-acting rotary actuator Series ARP during the closing action. The action starts from the 90° position and finishes at 0°. The generated torque force is at the highest at 90°, while it decreases along the stroke due to the fact that the springs get less compressed. In this case it is the springs which generates the driving force.
See also the TORQUE FORCE TABLE on the following page.

The above graph shows the torque force (in Nm) generated by a single acting rotary actuator Series ARP during the opening action. The action starts from the 0° position and finishes at 90°. The generated torque force is at the highest at 0°, while it decreases along the stroke due to the fact that the springs get more compressed, (the counter force increases). In this case it is the compressed air which generates the driving force.
See also the TORQUE FORCE TABLE on the following page.

TORQUE FORCE TABLE (Nm)

DOUBLE-ACTING models	3 bar	4 bar	5 bar	5,5 bar	6 bar	7 bar
ARP-001-2A	4,4	5,8	7,33	8,0	8,8	10,2
ARP-003-2A	11,8	15,8	19,7	21,7	23,7	27,6
ARP-005-2A	25,3	33,8	42,2	46,4	50,7	59,1
ARP-010-2A	50,7	67,6	84,5	92,9	101,4	118,3
ARP-012-2A	61,2	81,6	102,1	112,2	122,5	142,9
ARP-020-2A	100,9	134,6	168,2	185,08	201,9	235,5
ARP-035-2A	187,0	249,3	311,6	342,8	374,0	436,3
ARP-055-2A	298,5	398,0	497,5	547,2	597,0	696,5
ARP-070-2A	412,5	550,0	687,5	756,2	825,0	962,5
ARP-100-2A	561,0	748,0	935,0	1028,5	1122,0	1309,0
ARP-150-2A	827,5	1103,3	1379,1	1517,0	1655,0	1930,8
ARP-250-2A	1324,0	1765,3	2206,6	2427,3	2648,0	3089,3
ARP-400-2A	2401,5	3202,0	4002,5	4402,7	4803,0	5603,5

SINGLE-ACTING models (for rotation angles of 90°)	Quantity of springs External - Internal	Spring torque (Nm) 0° - 90°	Supply pressure of 4 bar 0° - 90°	Supply pressure of 5 bar 0° - 90°	Supply pressure of 5,5 bar 0° - 90°	Supply pressure of 6 bar 0° - 90°
ARP-003-1AA	8 - /	5,36 - 10,48	10,40 - 5,30	11,80 - 7,90	16,40 - 11,20	18,30 - 13,20
ARP-003-1BA	10 - /	6,70 - 13,10		13,10 - 6,70	15,00 - 8,60	17,00 - 10,60
ARP-003-1CA	11 - /	7,37 - 14,41			14,40 - 7,30	16,30 - 9,30
ARP-003-1DA	12 - /	8,04 - 15,72			13,70 - 6,00	15,70 - 8,00
ARP-005-1AA	8 - /	12,00 - 21,76	21,80 - 12,00	30,30 - 20,50	34,50 - 34,70	38,70 - 28,90
ARP-005-1BA	10 - /	15,00 - 27,20		27,30 - 15,10	31,50 - 19,30	35,70 - 23,50
ARP-005-1CA	11 - /	16,50 - 29,92			30,00 - 16,60	34,20 - 20,80
ARP-005-1DA	12 - /	18,00 - 32,64			28,50 - 13,80	32,70 - 18,10
ARP-010-1AA	8 - /	26,72 - 40,96	40,90 - 26,60	57,80 - 43,50	66,20 - 52,00	74,70 - 60,40
ARP-010-1BA	10 - /	33,40 - 51,20		51,10 - 33,30	59,60 - 41,80	68,00 - 50,20
ARP-010-1CA	11 - /	36,74 - 56,32			56,20 - 36,60	64,70 - 45,10
ARP-010-1DA	12 - /	40,08 - 61,44			52,90 - 31,50	61,30 - 40,00
ARP-012-1AA	4 - 0	28,80 - 52,40	52,90 - 29,30	73,30 - 49,70	83,50 - 59,90	93,70 - 70,10
ARP-012-1BA	4 - 2	36,00 - 65,50	54,70 - 16,20	66,10 - 36,60	76,30 - 46,80	86,50 - 57,00
ARP-012-1CA	4 - 3	39,60 - 72,10		62,50 - 30,00	72,70 - 40,30	82,90 - 50,50
ARP-012-1DA	4 - 4	43,20 - 78,60		58,90 - 23,50	69,10 - 33,70	79,30 - 43,90
ARP-020-1AA	4 - 0	47,70 - 86,80	86,90 - 47,80	120,60 - 81,50	137,40 - 98,30	154,20 - 115,10
ARP-020-1BA	4 - 2	53,70 - 108,50	75,00 - 26,10	108,60 - 59,80	125,40 - 76,60	142,30 - 93,40
ARP-020-1CA	4 - 3	65,50 - 119,40		102,60 - 48,90	119,50 - 65,80	136,30 - 82,60
ARP-020-1DA	4 - 4	71,60 - 130,20		96,70 - 38,10	113,50 - 54,90	130,30 - 71,70
ARP-035-1AA	4 - 0	88,40 - 160,80	161,00 - 88,70	223,40 - 151,00	254,60 - 182,20	285,70 - 213,40
ARP-035-1BA	4 - 2	110,50 - 201,00	138,90 - 48,50	201,30 - 110,80	232,50 - 142,00	263,60 - 173,20
ARP-035-1CA	4 - 3	121,60 - 221,10		190,20 - 90,70	221,40 - 121,90	252,60 - 153,10
ARP-035-1DA	4 - 4	132,60 - 241,20		179,20 - 70,60	210,40 - 101,80	241,50 - 133,00
ARP-055-1AA	4 - 0	141,00 - 256,40	256,80 - 141,40	356,30 - 240,90	406,00 - 290,60	455,70 - 340,30
ARP-055-1BA	4 - 2	176,30 - 320,50	221,60 - 77,30	321,00 - 176,80	370,70 - 226,50	420,50 - 279,20
ARP-055-1CA	4 - 3	193,90 - 352,60		303,40 - 144,70	353,10 - 194,50	402,80 - 244,20
ARP-055-1DA	4 - 4	211,50 - 384,60		285,80 - 112,70	335,50 - 162,40	385,20 - 212,10
ARP-070-1AA	4 - 0	195,0 - 354,0	355,0 - 196,0	493,0 - 333,0	561,0 - 402,0	630,0 - 471,0
ARP-070-1BA	4 - 2	243,0 - 443,0	306,0 - 107,0	444,0 - 245,0	513,0 - 314,0	581,0 - 382,0
ARP-070-1CA	4 - 3	268,0 - 487,0		420,0 - 201,0	488,0 - 269,0	557,0 - 338,0
ARP-070-1DA	4 - 4	292,0 - 531,0		395,0 - 156,0	464,0 - 225,0	533,0 - 294,0
ARP-100-1AA	4 - 0	265,0 - 482,0	483,0 - 266,0	670,0 - 453,0	764,0 - 547,0	857,0 - 640,0
ARP-100-1BA	4 - 2	331,0 - 603,0	417,0 - 146,0	604,0 - 333,0	697,0 - 426,0	791,0 - 520,0
ARP-100-1CA	4 - 3	365,0 - 663,0		571,0 - 272,0	664,0 - 366,0	758,0 - 459,0
ARP-100-1DA	4 - 4	398,0 - 723,0		538,0 - 212,0	631,0 - 306,0	725,0 - 399,0
ARP-150-1AA	4 - 0	391,0 - 711,0	712,0 - 392,0	988,0 - 668,0	1126,0 - 806,0	1264,0 - 944,0
ARP-150-1BA	4 - 2	489,0 - 889,0	615,0 - 215,0	890,0 - 491,0	1028,0 - 629,0	1166,0 - 766,0
ARP-150-1CA	4 - 3	538,0 - 977,0		842,0 - 402,0	979,0 - 540,0	1117,0 - 678,0
ARP-150-1DA	4 - 4	586,0 - 1066,0		793,0 - 313,0	931,0 - 451,0	1069,0 - 589,0
ARP-250-1AA	6 - /	606,0 - 936,0	1159,0 - 829,0	1600,0 - 1270,0	1821,0 - 1491,0	2042,0 - 1712,0
ARP-250-1BA	8 - /	808,0 - 1248,0	957,0 - 517,0	1398,0 - 958,0	1619,0 - 1179,0	1840,0 - 1400,0
ARP-250-1CA	9 - /	909,0 - 1404,0		1297,0 - 802,0	1518,0 - 1023,0	1739,0 - 1244,0
ARP-250-1DA	10 - /	1010,0 - 1560,0		1196,0 - 646,0	1417,0 - 867,0	1638,0 - 1088,0
ARP-400-1AA	10 - /	1180,0 - 1820,0	2022,0 - 1382,0	2823,0 - 2183,0	3223,0 - 2583,0	3623,0 - 2983,0
ARP-400-1BA	12 - /	1416,0 - 2184,0	1786,0 - 1018,0	2587,0 - 1819,0	2987,0 - 2219,0	3387,0 - 2619,0
ARP-400-1CA	15 - /	1770,0 - 2730,0		2233,0 - 1273,0	2633,0 - 1673,0	3033,0 - 2073,0
ARP-400-1DA	16 - /	1888,0 - 2912,0			2515,0 - 1491,0	2915,0 - 1891,0

Rotary actuators Series ARP - sizes from 001 to 150

NOTE TO THE TABLE:
* ARP-003-... also available with double drilling ISO F03/F05 with ØK of 25 mm and square key M of 9 mm

** DA = weight of double-acting version
SA = weight of single-acting version

BB = end-stroke regulation on the end cap
CC = end-stroke regulation on the end cap
DD = solenoid mounting/Namur Interface

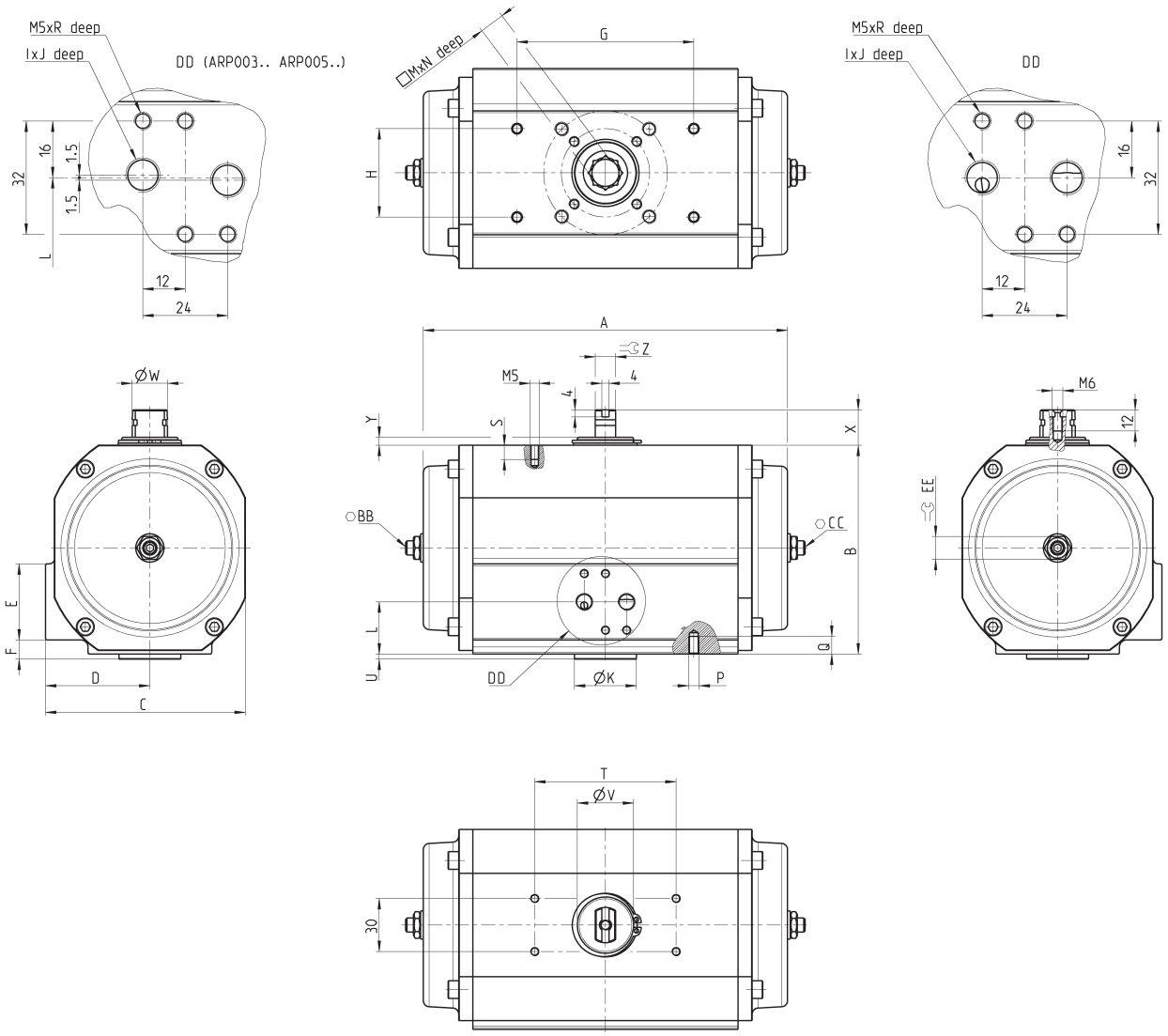

Mod.	ISO	A	B	C	D	E	F	G	H	I	J	ØK	L	M	N	P	Q	R	S	T	U	ØV	ØW	X	Y	Z	BB	CC	EE	Weight (Kg) DA/SA**
ARP-001-...	F03	103	45	51	28,5	-	-	-	-	G1/8	10	25	22.5	9	11	-	-	8	5	80	2	22.5	16	20	4.5	11.5	-	-	-	0.6
ARP-003-...	F04*	149.5	70	69.5	38	49	10.5	-	-	G1/8	10	30	32	11	11	-	-	8	8	80	1.5	32	20	20	4.5	11.5	-	4	13	1.0 / 1.1
ARP-005-...	F05, F07	186.5	87	90.5	49	49	22	-	-	G1/8	10	35	48	14	15	-	-	8	8	80	3	32	20	20	4.5	11.5	-	4	13	1.8 / 1.9
ARP-010-...	F05, F07	206	118	113	59	43	8	-	-	G1/8	10	35	29.5	14	19	-	-	8	8	80	3	32	20	20	4.5	11.5	-	6	19	2.8 / 2.9
ARP-012-...	F07, F05	194	118.5	121	67	43	8	107	49	G1/4	12	55	29.5	17	20	M6	10	8	5	80	3	45	20	20	6	11.5	-	6	19	4.1 / 4.7
ARP-020-...	F07, F10	218	140.5	136.5	72	43	8	107	49	G1/4	12	55	29.5	17	20	M6	10	8	5	80	3	50	32	20	6.5	19	-	8	24	6.3 / 7.0
ARP-035-...	F10, F07	266	166.5	156	78	43	8.5	161	73	G1/4	12	70	30	22	24	M6	12	8	5	80	3	61	32	20	7	19	-	8	24	10 / 12
ARP-055-...	F12, F10	312	207.5	191	95.5	43	20.5	161	73	G1/4	12	85	42	27	30	M8	15	8	5	130	3	61	40	30	7.5	25.5	10	10	30	18 /21
ARP-070-...	F12, F10	358	216	198	99	49	19.5	213	102	G1/4	12	85	46	27	30	M8	12	8	6	130	3	72	40	30	7	25.5	10	10	30	20 / 24
ARP-100-...	F14	366	254	227	113.5	43	39.5	213	102	G1/4	12	100	61	36	40	M10	15	8	6	130	3	76	40	30	7	25.5	12	12	36	31 / 35
ARP-150-...	F14	394	304	280	140	48.5	51.5	244	117	G1/4	12	100	76	36	40	M12	22	8	6	130	3	78	40	30	7	25.5	12	12	36	44 / 52

Rotary actuators Series ARP - size 250

NOTE TO THE TABLE:
** DA = double-acting - SA = single-acting

CC = end-stroke regulation on the end cap
DD = solenoid mounting/Namur Interface

Owing to the end caps sizes, dimensions change from the double-acting model to the single-acting one.

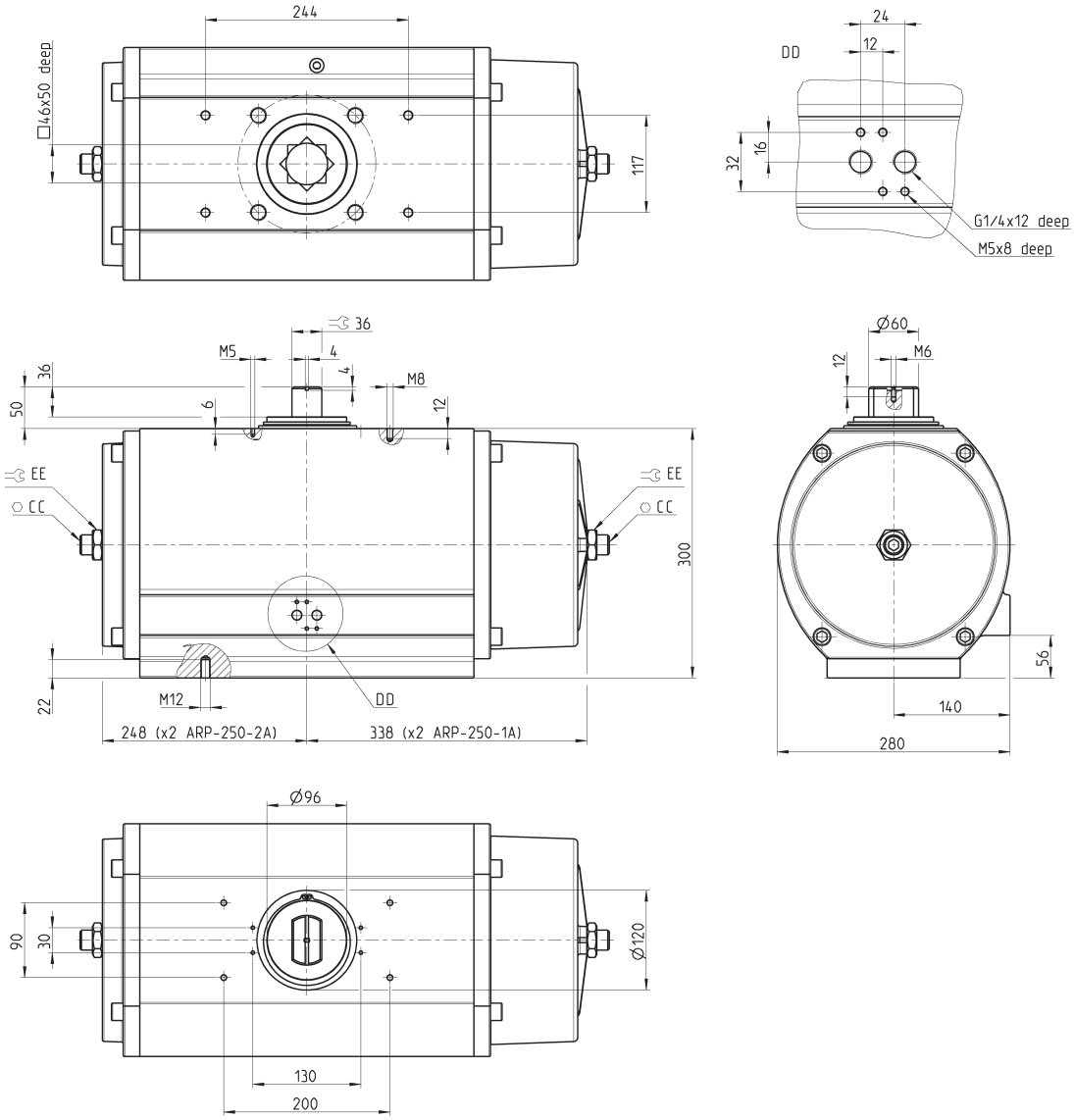

Mod.	ISO	CC	EE	Weight (Kg) DA / SA **
ARP-250-...	F16	14	46	59 / 84

Rotary actuators Series ARP - size 400

NOTE TO THE TABLE:
** DA = double-acting - SA = single-acting

CC = end-stroke regulation on the end cap
DD = solenoid mounting/Namur Interface

Owing to the end caps sizes, dimensions change from the double-acting model to the single-acting one.

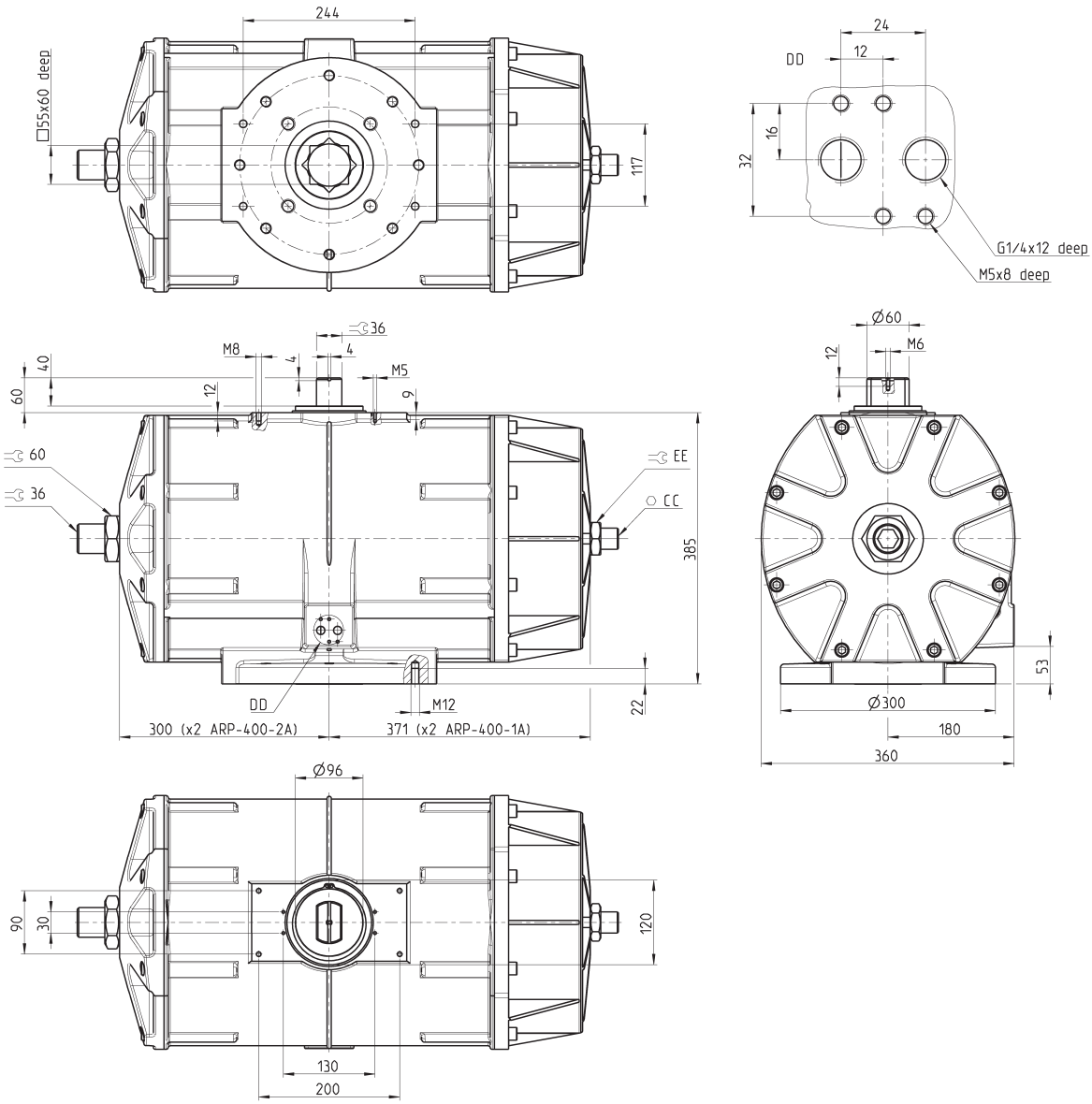

Mod.	ISO	CC	EE	Weight (Kg) DA / SA **
ARP-400-...	F25, F16	14	46	107 / 135

Rotary actuators Series ARP

Reference standard ISO 5211 concerning the dimensions of flanges connecting actuator and valve.

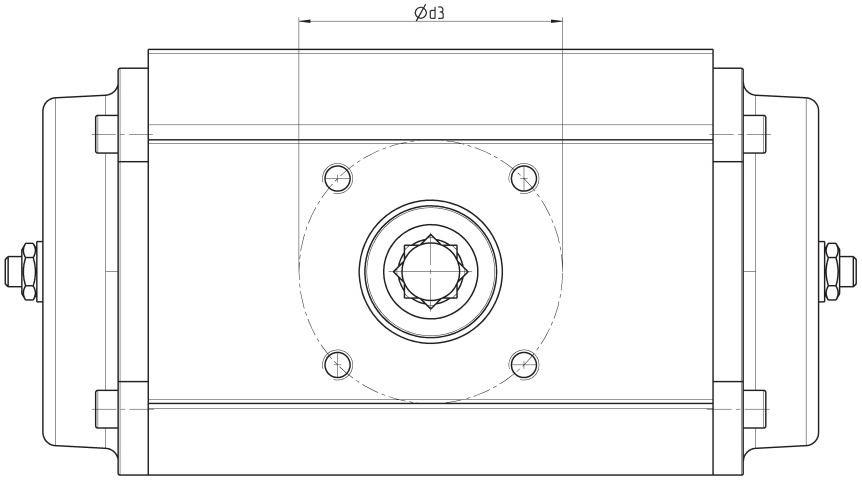

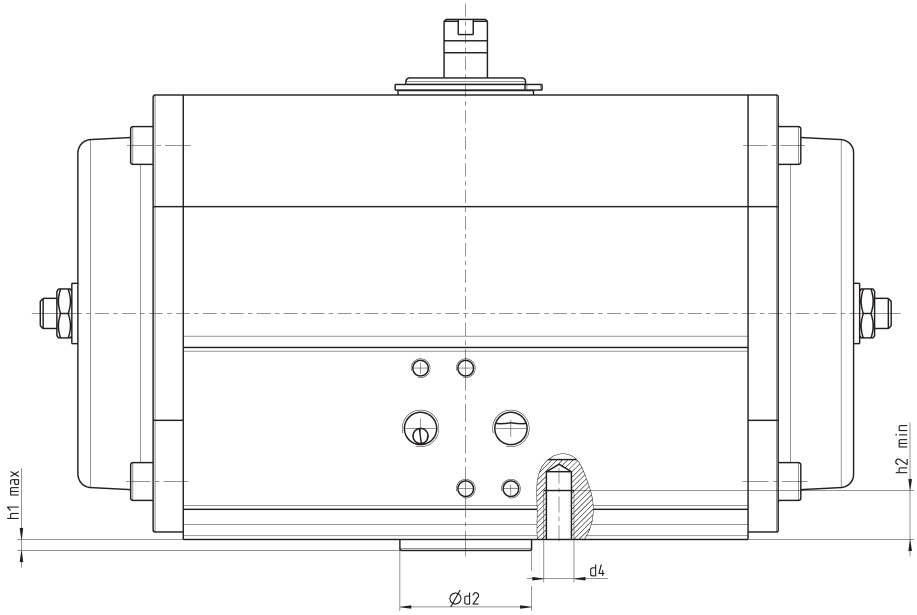

ISO flange	d2 f8	d3	d4	h1 max	h2 min	nr of holes
F03	25	36	M5	3	8	4
F04	30	42	M5	3	8	4
F05	35	50	M6	3	9	4
F07	55	70	M8	3	12	4
F10	70	102	M10	3	15	4
F12	85	125	M12	3	18	4
F14	100	140	M16	4	24	4
F16	130	165	M20	5	30	4
F25	200	254	M16	5	24	8

Series QR
Rotary actuators with rack and pinion system

Magnetic, cushioned
7, 10, 20, 30, 50 mm
Rotation angles: 0 - 190°

- Compact design
- High rotation stability
- Adjustable rotation angle
- Easy to install
- Mechanical or hydraulic shock absorbers
- Can be integrated into manipulation systems

The Series QR rotary actuators are cylinders with a double piston, able to provide high torques while ensuring high stability and a precise rotary movement.
The rotation angle can be easily set as desired between 0° and 190° by means of adjustment bolts or hydraulic absorbers positioned on one side of the rotary table. The use of shock absorbers allows the dampening of two to five times more kinetic energy than with regulation bolts. The rotary table is compact and allows direct mounting of the load. Their compact design, lightness and ease to combine with EOAT make these actuators particularly suitable for use in the assembly and packaging sectors and any application that requires transfer, tilting or rotation of objects.

GENERAL DATA

Type of construction	"Rack & Pinion" system
Operation	double-acting
Materials	profile, end blocks and rotor = aluminium - rack = steel - pinion = steel – rack's guide ring = PTFE - seals = NBR
Type of mounting	by means of screws in the central body
Sizes	07, 10, 20, 30, 50
Operating temperature	0°C ÷ 70°C
Standard rotation angles	0 - 190°
Minimum rotation angle (with shock absorber)	10 = 66°, 20 = 52°, 30 = 46°, 50 = 70° (under these values the rotation is totally cushioned)
Repeatability	<0.2°
Bearings	ball bearings
Operating pressure	1 - 10bar, 1 - 7bar (for 7mm), 1-6bar (for versions with shock absorber)
Medium	filtered air in class 7.8.4 according to ISO 8573-1 standard. If lubricated air is used, it is recommended to use oil ISOVG32. Once applied the lubrication should never be interrupted.

CODING EXAMPLE

QR	20	A

QR	SERIES	PNEUMATIC SYMBOL CD18
20	SIZE: 07 10 20 30 50	
A	TYPE OF CUSHIONING: A = MECHANICAL STOP S = SHOCK ABSORBER	

PNEUMATIC SYMBOL

The pneumatic symbol indicated in the CODING EXAMPLE is reported below.

MAXIMUM PERMISSIBLE KINETIC ENERGY AND ROTATION TIMES

Size	Maximum permissible kinetic energy (J)	Maximum permissible kinetic energy (J)	Setting range of rotation time for stable use (s/90°)	Setting range of rotation time for stable use (s/90°)
	With adjustment bolt	**With shock absorber**	**With adjustment bolt**	**With shock absorber**
07	**0.006**	**-**	**0.2 - 1.0**	**-**
10	**0.01**	**0.04**	**0.2 - 1.0**	**0.2 - 1.0**
20	**0.025**	**0.12**	**0.2 - 1.0**	**0.2 - 1.0**
30	**0.05**	**0.12**	**0.2 - 1.0**	**0.2 - 1.0**
50	**0.08**	**0.30**	**0.2 - 1.0**	**0.2 - 1.0**

GEOMETRIC TOLERANCES OF THE ROTARY TABLE

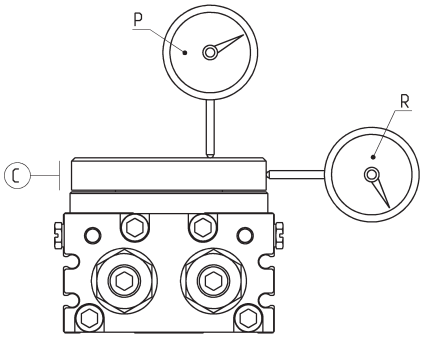

P = Parallelism of the rotary table 0,1mm
R = Roundness of the rotary table 0,1mm
C = Cylindricity of the rotary table 0,1mm

MISALIGNMENT OF THE ROTARY TABLE

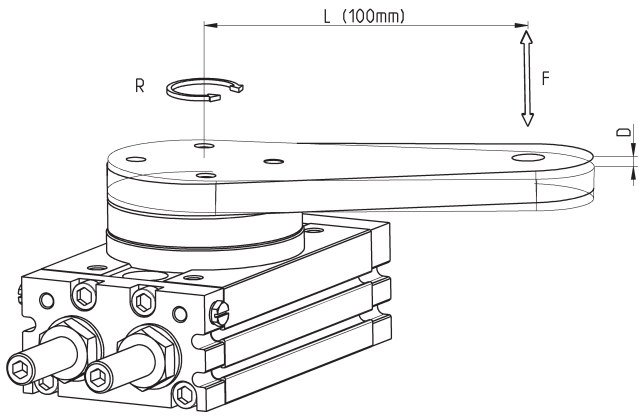

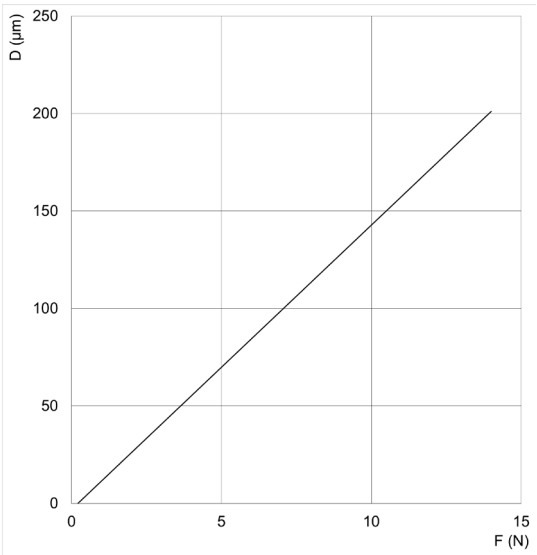

R = Direction of rotation
L = Arm
D = Misalignment table

QR07
D = Misalignment
F = Force

MISALIGNMENT OF THE ROTARY TABLE

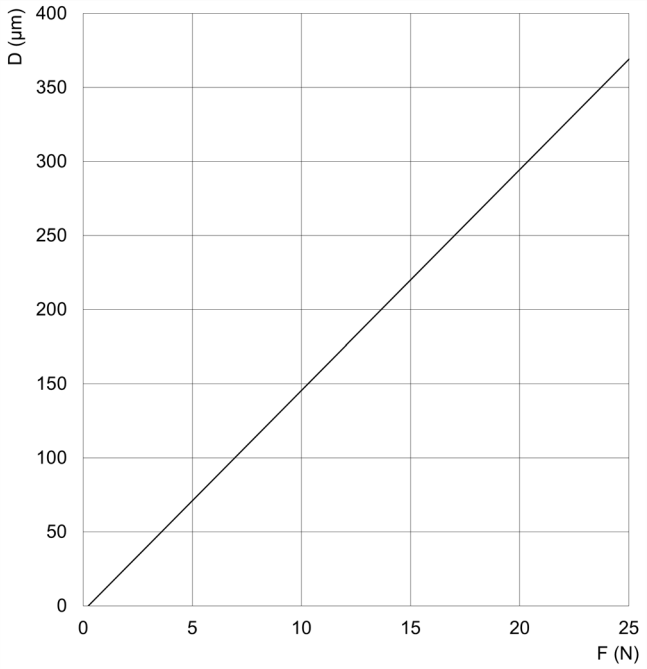

QR10

D = Misalignment
F = Force

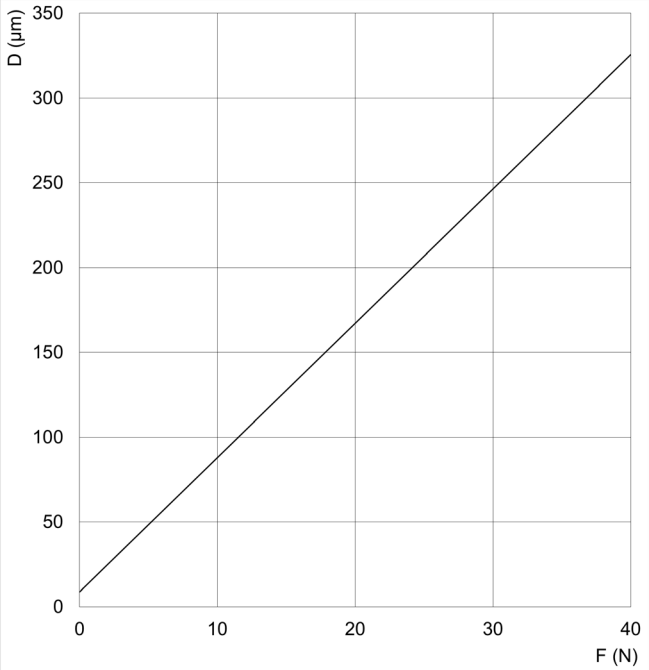

QR20

D = Misalignment
F = Force

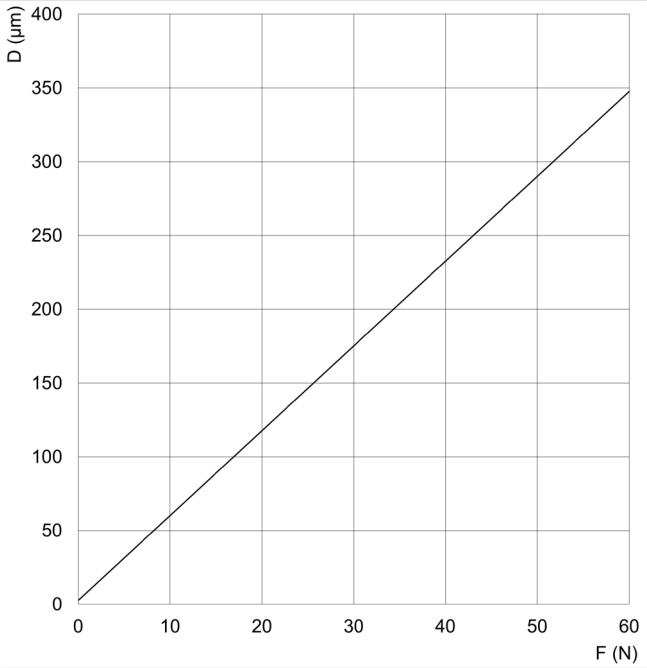

QR30

D = Misalignment
F = Force

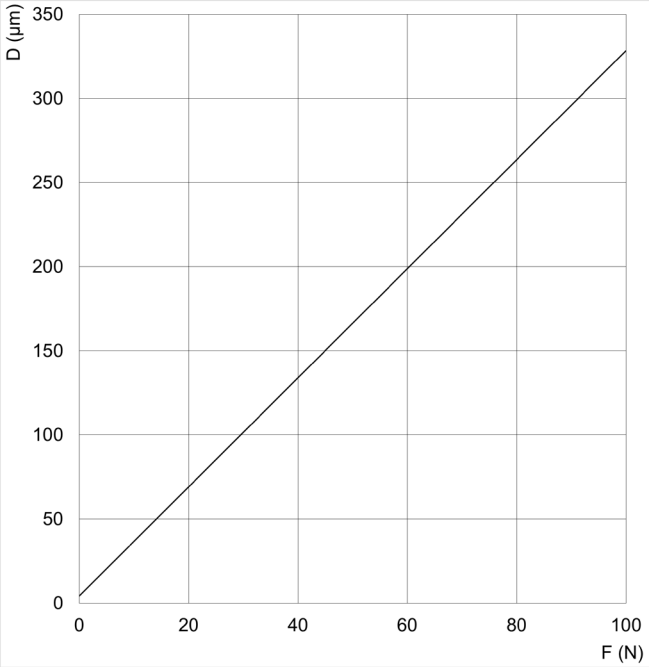

QR50

D = Misalignment
F = Force

OUTPUT TORQUE AND PERMISSIBLE LOADS

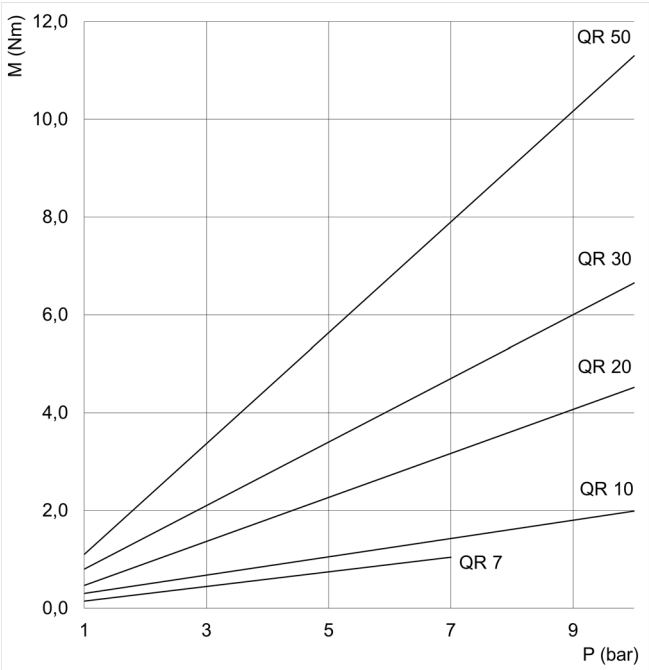

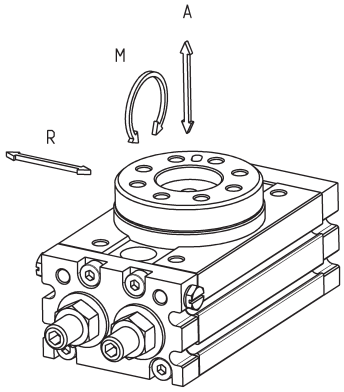

M = Output torque
P = Pressure

Maximum permissible load

Size	R radial (N)	A axial (N)	M moment (Nm)
07	47	65	1.3
10	75	73	2.3
20	142	132	3.9
30	192	189	5.1
50	309	291	9.5

SIZING / CHOICE OF THE ACTUATOR

HOW TO CHOOSE THE SUITABLE ROTARY ACTUATOR:

OPERATING CONDITIONS:

Pressure: 4bar (0.4 MPa)
Rotation angle: 90°
Rotation time: 1.0 second
Load:
P1 = mass of the plate at the left of the centre of rotation 0.066 kg
P2 = mass of the plate at the right of the centre of rotation 0.151 kg
P3 = mass of the load 0.216 kg

1) ROTATION TIME
Check whether the rotation time requested by the application falls within the range of values of the section "kinetic energy and rotation times".

Requested rotation time: 1.0 s/90°

2) NECESSARY TORQUE
Check whether the torque requested by the application falls within the range of values defined in the section "output torque and permissible loads".

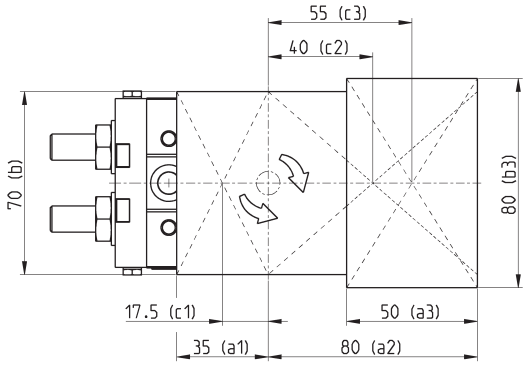

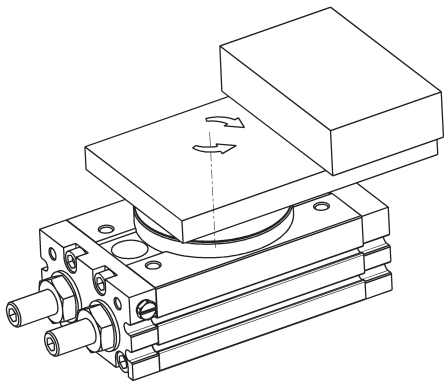

TYPES OF LOAD:

-STATIC LOAD (Ts)
A load that requires pressure force only

F = pressure force (N)
L = arm between the barycentre of the load and the centre of the axis (mm)

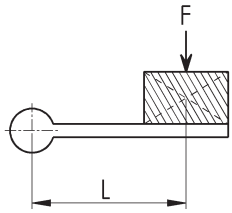

$$Ts = F \cdot L \ (Nm)$$

-RESISTANCE LOAD (Tf)
A load that is affected by external forces such as friction and gravity. Since the aim is to move the load, it is necessary to adjust the speed and leave a margin of 5/6 N of actual torque.

M = actual torque of the actuator (Nm)
μ = friction coefficient
m = mass of the load (kg)
g = gravitational acceleration (m/s²)

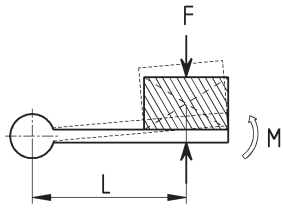

$$M \geq (3 \div 5) \cdot Tf \ (Nm)$$

$$F = \mu \cdot m \cdot g \ (N)$$

$$g = 9.8 \ (m/s^2)$$

$$Tf = F \cdot L \ (Nm)$$

- LOAD OF INERTIA (Ta)
The load must be rotated by the actuator, it is necessary to adjust the speed and leave a margin of 10N of actual torque.

M = actual torque of the actuator (Nm)
I = moment of inertia (kgm²)
α = angular acceleration (rad/s²)
θ = rotation angle
t = rotation time (s)

In the example the only force to overcome is the force of inertia as the other two are null.

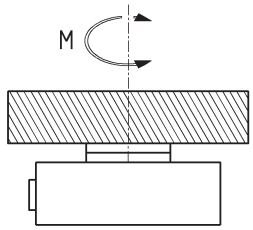

$$M \geq 10 \cdot Ta \ (Nm)$$

$$Ta = I \cdot \alpha \ (Nm)$$

$$\alpha = \frac{2 \cdot \theta}{t^2} \ (rad/s)$$

Start calculating the moment of inertia (I) based on the load.

I1 - PLATE
I3 - LOAD

$I_1 = m_1 \cdot (4 \cdot a_1^2 + b^2)/12 + m_2 \cdot (4 \cdot a_2^2 + b^2)/12 =$
$0.066 \cdot (4 \cdot 0.035^2 + 0.07^2)/12 + 0.151 \cdot (4 \cdot 0.08^2 + 0.07^2)/12 = 0{,}00044 \ Kgm^2$

$I_3 = m_3 \cdot (4 \cdot a_3^2 + b_3^2)/12 + m_3 \cdot c_3^2 =$
$0.216 \cdot (4 \cdot 0.05^2 + 0.08^2)/12 + 0.216 \cdot 0.055^2 = 0{,}00095 \ Kgm^2$

The total moment of inertia (I) is:

$I = I_1 + I_3 = 0{,}00044 + 0{,}00095 = 0.00139 \ Kgm^2$

Calculate the angular acceleration (α).
Based on the conditions θ=90° =π/2 rad, t=1.0s you will have:
Therefore the load of inertia (Ta) equal to the necessary torque, is given by:
μ= safety coefficient

$\alpha = 2 \cdot \theta / t^2 = (2 \cdot \pi/2)/1^2 = 3.14 \ rad/s^2$
$Ta = \mu \cdot I \cdot \alpha$
$Ta = 5 \cdot 0.00139 \cdot 3.14 = 0.00218 \ Nm$

3) PERMISSIBLE KINETIC ENERGY
Check whether the kinetic energy requested by the application falls within the range of values of the section "maximum permissible kinetic energy and rotation times"

Kinetic energy (E) is given by:

$E = 0.5 \cdot I \cdot \alpha^2 = 0.5 \cdot 0.00218 \cdot 3.14^2 = 0.0068 \ J$

4) MAXIMUM PERMISSIBLE LOAD
Check whether the maximum load requested by the application falls within the range of values of the section "output torque and permissible loads" and respects the following relation:

$$\frac{Ws}{MWs} + \frac{Wr}{MWr} + \frac{M}{MM} \leq 1$$

Ws = actual axial load
MWs = max axial load
Wr = actual radial load
MWr = max radial load
M = actual torque
MM = max torque

AXIAL LOAD (Ws)

The axial load (Ws) is given by:

$PT = P1 + P2 + P3 = 0.066 + 0.151 + 0.216 = 0.43$ Kg

$Ws = PT \cdot g = 0.43 \cdot 9.81 = 4.21$ N

RADIAL LOAD (Wr) - there is no radial load (Wr)

ACTUAL TORQUE (M)

F1 = force on the area of the plate at the left of the centre of rotation (N)
c1 = arm of F1 (m)

$F1 = P1 \cdot g = 0.066 \cdot 9.81 = 0.64$ N

F2 = force on the area of the plate at the right of the centre of rotation (N)
c2 = arm of F2 (m)
M1 = moment generated by the whole plate (Nm)

$F2 = P2 \cdot g = 0.151 \cdot 9.81 = 1.48$ N

$M1 = F1 \cdot c1 - F2 \cdot c2 = 1.48 \cdot 0.04 - 0.64 \cdot 0.0175 = 0.048$ Nm

F3 = force of the weight of the load (N)
M3 = moment generated by the load (Nm)

$F3 = P3 \cdot g = 0.216 \cdot 9.81 = 2.11$ N
$M3 = F3 \cdot c3 = 2.11 \cdot 0.055 = 0.116$ Nm

The actual torque (M) is given by summing M1 + M3:

$M = M1 + M3 = 0.048 + 0.116 = 0.164$ Nm

5) CHOICE OF THE SUITABLE ACTUATOR
With the results obtained from the points above, we can say that:
1. Rotation time 1.0s/90° is satisfied by all sizes
2. Total load of 0.0218 Nm at 4bar is already guaranteed by QR07
3. Kinetic energy of 0.0068J is guaranteed by size 10
4. Maximum permissible load of QR10A is major than the one examined.

The most suitable rotary actuator for the application is QR10A

HOW TO CALCULATE THE MOMENT OF INERTIA

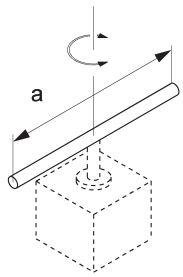

$$I = m \cdot \frac{a^2}{12}$$

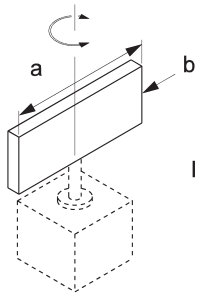

$$I = m \cdot \frac{a^2}{12}$$

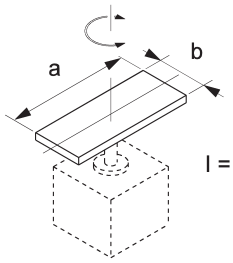

$$I = m \cdot \frac{a^2 + b^2}{12}$$

1-THIN SHAFT
Axis of rotation perpendicular to the shaft, aligned to the barycentre

2-THIN RECTANGULAR PLATE
Axis of rotation parallel to side b, aligned to the barycentre

3-THIN RECTANGULAR AND PARALLELEPIPED PLATE
Axis of rotation perpendicular to the plate, aligned to the barycentre

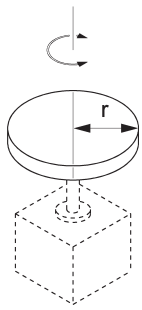

$$I = m \cdot \frac{r^2}{2}$$

4-ROUND PLATE OR COLUMN
Axis of rotation passing through the central axis

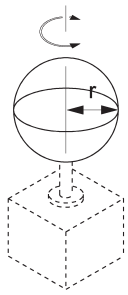

$$I = m \cdot \frac{2r^2}{5}$$

5- SOLID SPHERE
Axis of rotation passing through the centre of the diameter

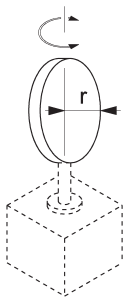

$$I = m \cdot \frac{r^2}{4}$$

6-THIN ROUND PLATE
Axis of rotation passing through the centre of the diameter

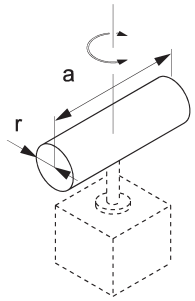

$$I = m \cdot \frac{3r^2 + a^2}{12}$$

7-CYLINDER
Axis of rotation passing through the central axis and aligned to the barycentre

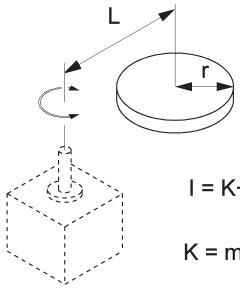

$$I = K + m \cdot L^2$$

$$K = m \cdot \frac{r^2}{2}$$

8-AXIS OF ROTATION AND BARYCENTRE NOT ALIGNED
K = moment of inertia on the barycentre of the load, to replace with one of the previous figures (for example 4)

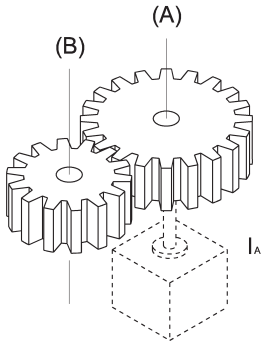

$$I_A = \left(\frac{a}{b}\right)^2 \cdot I_B$$

9-TRANSMISSION THROUGH TOOTHED GEARS
1) Calculate the moment of inertia "IB" for the rotation of shaft "B"
2)"IB" is converted into moment of inertia "IA" for the rotation of shaft "A"
a/b = n° of teeth of toothed gears

SERIES QR ROTARY ACTUATORS

* maximum protrusion, with 190 ° rotation angle adjustment

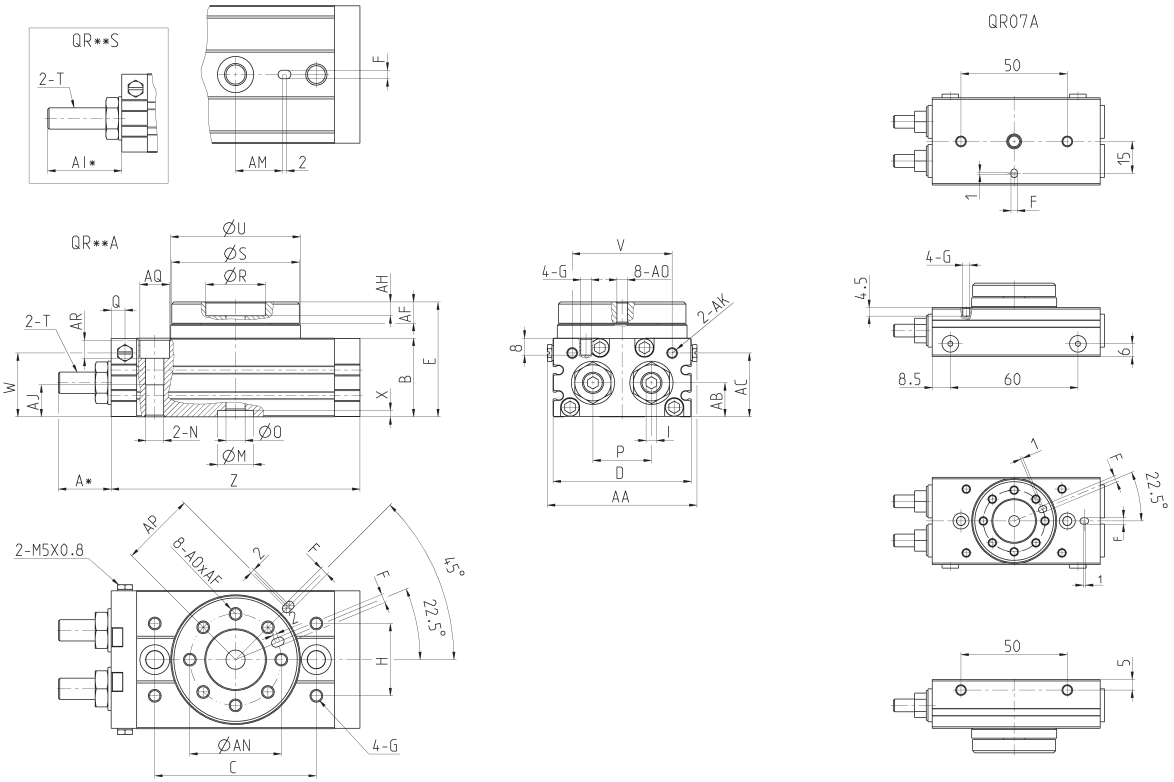

Mod.	A	B	C	D	E	F	G	H	I	L	M	N	O	P	Q	R	S	T	U	V	W	X	Y	Z
07	18.3	23	45	41	34.5	3	M4X0.7	30	3	-	7	M5x0,8	6	18.4	-	20	39	M4X0.7	40	-	-	-	M5X0.8	79
10	17.3	34	60	50	47	3	M5X0.8	27	4	9.5	15	M8x1,25	5	20	5	20	45	M8X1	46	34.5	28	3.5	M8X1.25	92
20	24.8	37	76	65	54	4	M6X1	34	5	12	17	M10x1,5	9	27.5	6.5	28	60	M10X1	61	47	30	3	M10X1.5	117
30	24.8	40	84	70	57	4	M6X1	37	5	12	22	M10x1,5	10	29	7	32	65	M10X1	67	50	33.5	3.5	M10X1.5	127
50	31.3	46	100	80	66	5	M8X1.25	50	6	15.5	26	M12x1,75	11	38	10	35	75	M14X1.5	77	63	37.5	3.5	M12X1.75	152

Mod.	AA	AB	AC	AF	AH	AI	AJ	AK	AM	AN	AO	AP	AQ	AR
07	42.7	12.2	-	6.3	3	-	-	-	.	29	M4X0.7	32.5	7.5	4.5
10	55.4	15.5	28	8	4.5	30.9	12	M5X0.8	19	32	M5X0.8	27	11	6.5
20	70.4	16	30	10	6.5	34.8	15	M5x0.8	24	43	M6x1	36	14	8.5
30	75	18.5	32	10	5	34.8	15	G1/8	28	48	M6x1	39	14	8.5
50	85	22	37.5	12	5.5	54.3	18	G1/8	33	55	M8x1.25	45	18	10.5

Series 50 rodless cylinders

Double-acting, magnetic, cushioned
ø 16, 25, 32, 40, 50, 63, 80 mm

- Four ports on each chamber
- Possibility to supply both chambers from one side (on request)

Series 50 rodless cylinders are available in 7 different diameters to cover as many applications as possible. A permanent magnet is assembled on the cylinder piston allowing the position to be detected by means of proximity switches positioned on the sliding axis.
This series of cylinder is normally supplied with end-stroke cushioning, that can be regulated by means of a screw located on the end-cover.

The Series 50 cylinders are recommended to be used according to the load values and torque forces detailed in the relative tables.

GENERAL DATA

Type of construction	rodless with integral carriage
Operation	double-acting
Materials	end-covers, piston and barrel = AL seals = PU and NBR
Operating temperature	0°C ÷ 50°C(with dry air - 10°C)
Operating pressure	1 ÷ 8 bar
Speed	10 ÷ 1000 mm/sec (without load)
Fluid	clean air, without lubrication If lubricated air is used, it is recommended to use oil ISOVG32. Once applied the lubrication should never be interrupted.
Strokes min - max	for all bores 100 ÷ 4000 mm
Stroke tolerance	strokes ≤ 1000 mm = 0 / +0,6 mm strokes > 1000 mm = 0 / +3 mm
Type of mounting	foot mounted

CODING EXAMPLE

50	M	2	P	50	A	0500

50	SERIES	
M	VERSION M = standard magnetic	
2	OPERATION 2 = double-acting cushioned	PNEUMATIC SYMBOL CDSS (see the following pages)
P	MATERIALS P = anodized AL profile tube - PU and NBR seals - standard carriage U = anodized AL profile tube - PU and NBR seals - flanged carriage	
50	BORE 16 = 16 mm 25 = 25 mm 32 = 32 mm 40 = 40 mm 50 = 50 mm 63 = 63 mm 80 = 80 mm	
A	TYPE OF MOUNTING A = standard	
0500	STROKE (see table)	

MAXIMUM PERMITTED LOADS AND TORQUE FORCES

M = F x b
MS = F x b
MV = F x b
Note: Loads and bending torque are valid if applied separately.

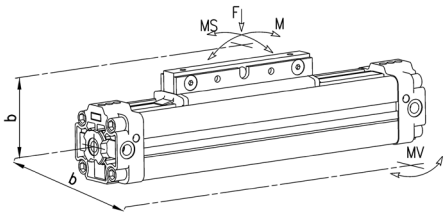

Ø	Max. load permitted (N) F	Max. bending torque force permitted (Nm) M	Max. bending torque force permitted (Nm) Ms	Torsional torque force permitted (Nm) Mv
16	218	3,1	0,5	1
25	660	12,4	1,9	5
32	720	30	4	8
40	1370	39	4	9
50	1600	122	11	16
63	2210	190	19	26
80	3770	305	30	47

LOADS ACCORDING TO SUPPORTS DISTANCE

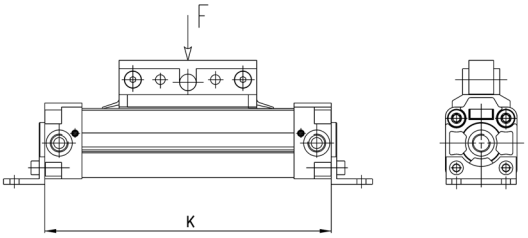

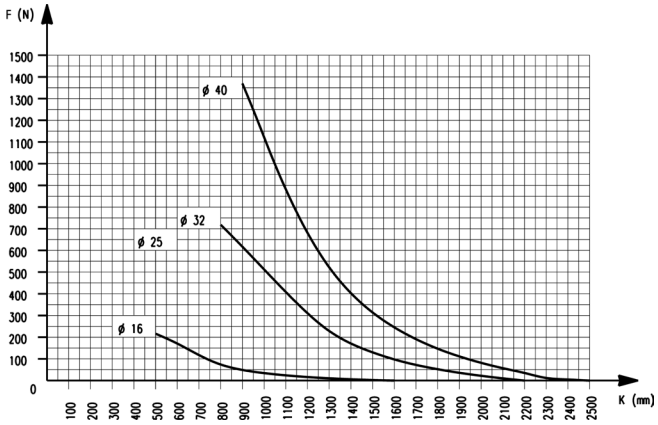

Note: This chart has been made according to a max. distance of 0.5 mm Load (N).
Once the load and the cylinder diameter have been fixed, the chart gives the K values beyond which it is necessary to put an intermediate feet Mod. BH-50.

LOADS ACCORDING TO SUPPORTS DISTANCE

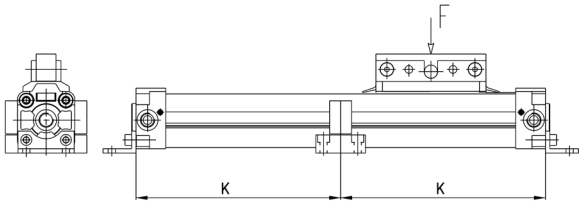

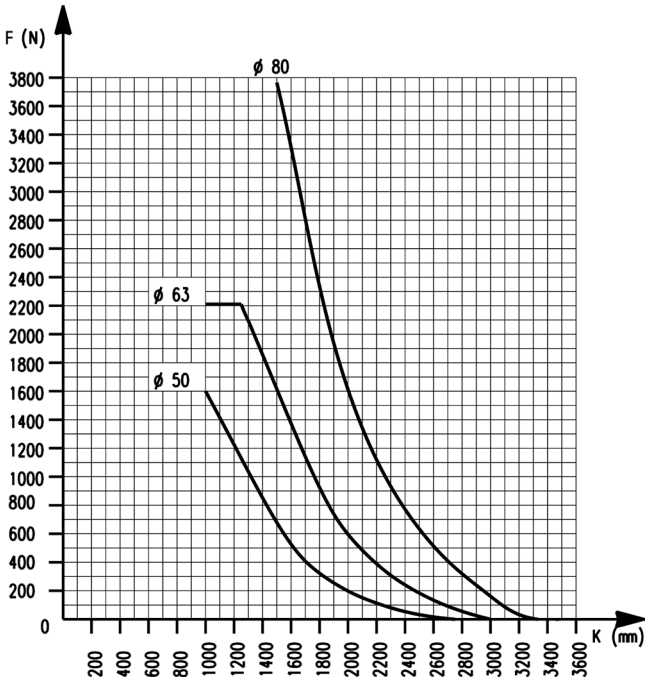

Note: This chart has been made according to a max. distance of 0.5 mm Load (N).
Once the load and the cylinder diameter have been fixed, the chart gives the K values beyond which it is necessary to put an intermediate feet Mod. BH-50.

Cylinders with standard carriage Mod. 50M2P

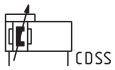

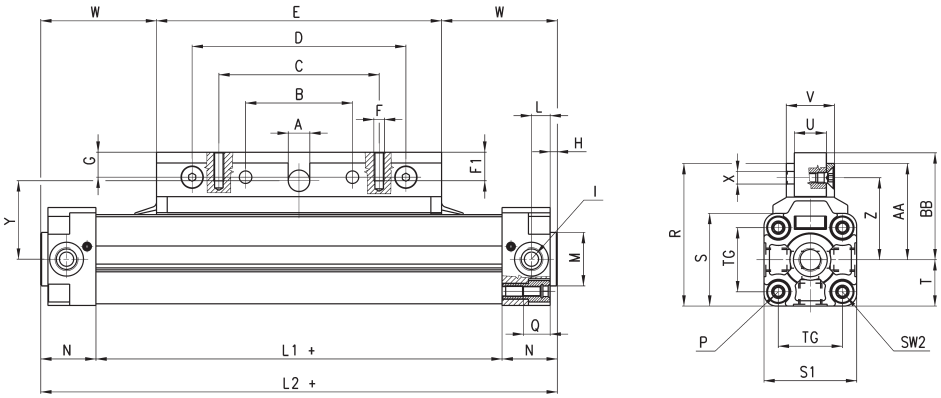

DIMENSIONS																													
Ø	A	B	C	D	E	F	F1	G	H	I	L	L1+	L2+	M	N	P	Q	R	S	S1	T	U	V	Z	X	Y	W	AA	BB	TG	SW2
16	5	32	48	64	76	M4	8	6	2	M5	5,3	100	130	16	15	M3	8	42,5	28	27	13,5	10	18	24	4,5	24,5	27	29	30	18	4
25	8	50	80	100	120	M5	10	13	2,5	G1/8	9,5	150	200	22	25	M5	13,5	63	40	40	20	15	23	33	5,5	38	40	43	46	27	6
32	12	60	90	120	160	M6	15	14	4	G1/4	10,5	188	250	30	31	M6	15	80	52	52	26	18	27	46	7	48,5	45	54	60	36	6
40	12	55	90	110	150	M6	12	12	4	G1/4	17,5	226	300	35	37	M6	15	88,5	63	63	31,5	18	28	49	7	51	75	57	61	43	6
50	12	70	110	140	180	M6	12	12	4	G1/4	13,5	272	350	40	39	M8	16	103	74,5	76	38	18	28	57	7	59	85	65	69	53	10
63	16	90	140	180	220	M8	15	15	4	G3/8	17,5	342	430	45	44	M8	16	125	92	94	47	19	30	68	9	70	105	78	83	67	10
80	20	120	180	240	280	M10	20	18	4	G1/2	32	408	520	45	56	M10	18,5	153,5	115,5	117	58,5	20	32	83	11	86	120	95	101	83	12

Cylinders with flanged carriage Mod. 50M2U

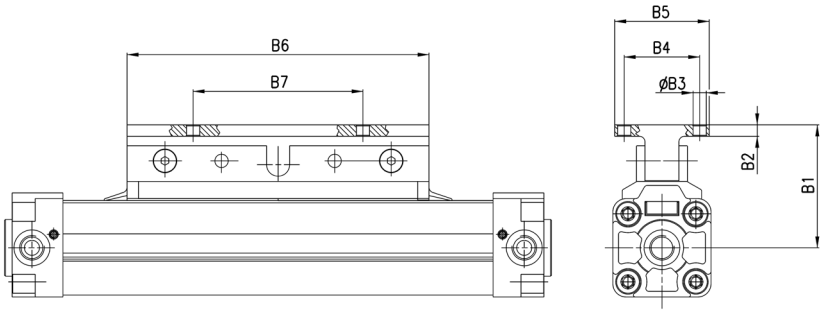

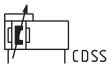

DIMENSIONS							
Ø	B1	B2	B3	B4	B5	B6	B7
16	36	4	4,5	25	40	76	50
25	51	5	5,5	35	50	120	70
32	66	6	7	40	50	160	90
40	66	6	7	45	60	150	80
50	74	6	7	45	60	180	100
63	89	7	9	60	80	220	130
80	108	8	11	75	100	280	180

Foot mount Mod. B-50

+ = add the stroke

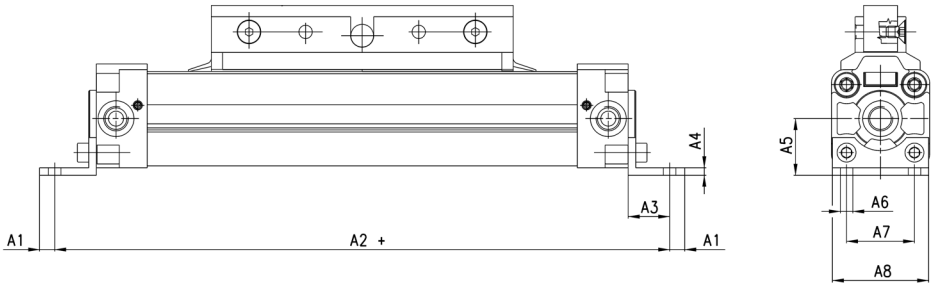

DIMENSIONS								
Mod.	A1	A2+	A3	A4	A5	A6	A7	A8
B-50-16	3	150	12	3	15	3,6	18	26
B-50-25	6,5	232	18,5	3	22	5,5	27	39
B-50-32	8	286	22	4	30	6,6	36	51
B-50-40	13,5	325	16,5	4	38	9	30	62
B-50-50	13,5	375	16,5	6	48	9	40	75
B-50-63	11	460	19	6	57	11	48	93
B-50-80	18,5	555	21,5	6	72	14	60	116

Brackets Mod. BH-50

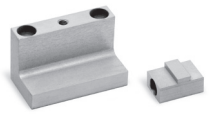

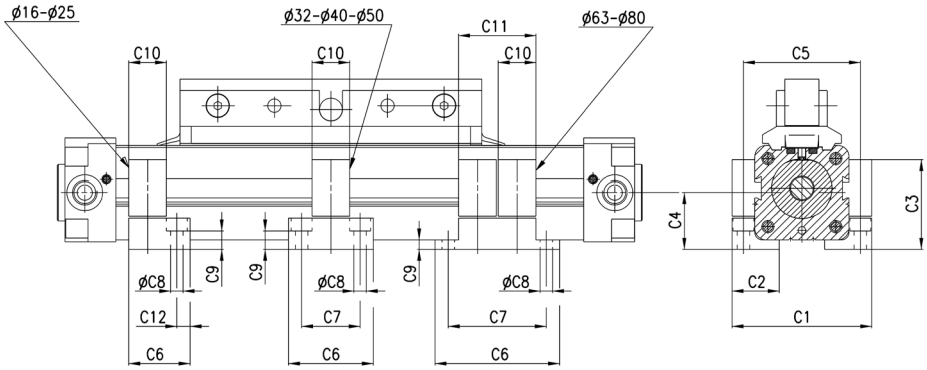

DIMENSIONS												
Mod.	C1	C2	C3	C4	C5	C6	C7	C8	C9	C10	C11	C12
BH-50-16	42	12	25	15	34	20	-	3,4	4,5	12	-	4
BH-50-25	56	21	32,6	22	47	22	-	5,5	10,1	12	-	5
BH-50-32	74	25	47,5	30	62	45	31	6,6	9,7	20	-	-
BH-50-40	85	35	56	38	73	60	45	6,6	18,2	20	-	-
BH-50-50	98	32	67,5	48	86	60	45	6,6	29,7	20	-	-
BH-50-63	126	50	78,5	57	109	74	56	9	11	20	41	-
BH-50-80	155	65	96	72	135	80	60	11	14,5	20	41	-

Self-compensating adaptor Mod. CF-50

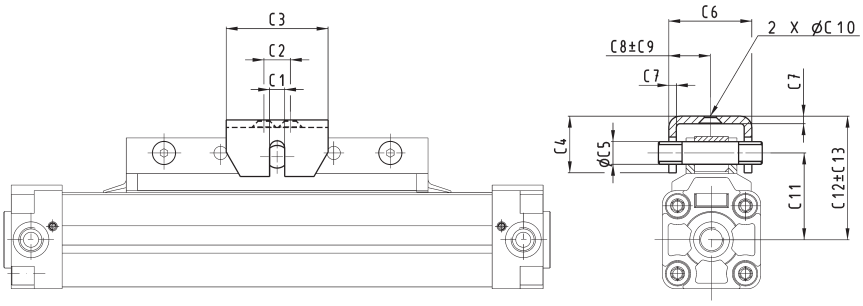

DIMENSIONS													
Mod.	C1	C2	C3	C4	C5	C6	C7	C8	C9	C10	C11	C12	C13
CF-50-25	6	16	40,8	22,9	7,9	31,5	3	15,8	1,2	5,6	38	55,4	4,5
CF-50-32	9,3	50	76,4	27,4	11,9	38,5	4	19	1,7	7,1	48,5	69,4	5,5
CF-50-40	9,3	50	76,4	24,4	11,9	38,5	4	19	1,2	7,1	51	70,9	3,5
CF-50-50	9,3	80	114,6	37,1	11,9	43,9	6	22	1,8	8,6	59	89,2	5,9
CF-50-63	12,7	100	134,6	42,2	15,9	43,9	6	22	0,8	8,6	70	104,7	6,5
CF-50-80	12,7	125	159,5	42,2	19,9	50,3	6	25,1	3	11	86	122,2	5

Series 52 rodless cylinders

Double-acting, magnetic, cushioned ø 25, 32, 40, 50, 63 mm

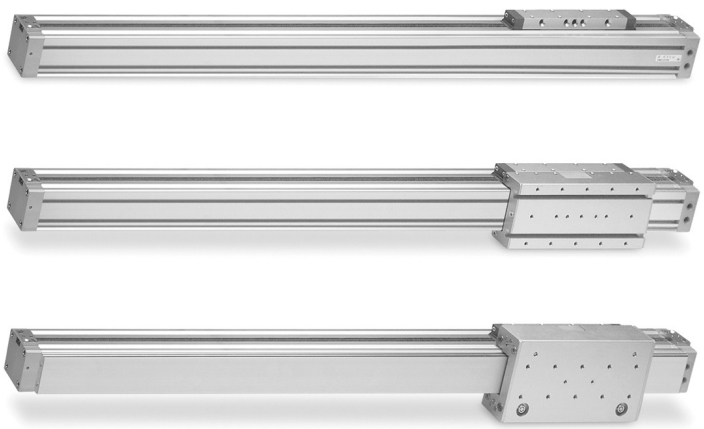

- Three main versions, Basic, Slide bearing and Roller bearing
- Extra short carriage as option for all versions
- Possibility of feeding both chambers from one side only

Series 52 rodless cylinders are available in 5 diameters (25, 32, 40, 50 and 63 mm) and comes in three main versions: Basic (M), with Slide bearing (G) and with Roller bearings (R). Furthermore these three main versions are each available with either standard- or short carriage to cover a wider range of applications.

A permanent magnet is assembled on the piston allowing the position to be detected by means of proximity switches positioned in grooves located on 3 sides on the cylinder profile. The cylinder is equipped with an end stroke cushioning which can be regulated by means of a screw located on each end cover of the cylinder. These cylinders are also available in versions with air supply from one side (end cover) only if needed.

GENERAL DATA

Models	Standard, with slide bearings, with roller bearings, air supply from one or both sides, with standard or short carriage. For sizes 50 - 63 roller bearings version is not available.
Materials	AL (anodized), plastic, hardened steel, seals: NBR, PU
Operating temperature	-10°C ÷ +70°C
Operating pressure	1 ÷ 8 bar 1,5 ÷ 8 bar (Ø 25 for "R" version)
Speed	10 ÷ 1000 mm/sec (without load)
Fluid	filtered air, without lubrication. If lubricated air is used, it is recommended to use ISO VG32 oil. Once applied the lubrication should never be interrupted. If speeds exceed 1 m/s lubricated air is recommended.
Bore size	Ø 25 Ø 32 Ø 40 Ø 50 Ø 63
Cushioning length (mm)	14 mm - Ø 25 20 mm - Ø 32 25 mm - Ø 40 22 mm - Ø 50 32 mm - Ø 63
Strokes with standard carriage (version "P")	max 6000 mm - Ø25 max 5950 mm - Ø32 max 5900 mm - Ø40, Ø50 max 5880 mm - Ø63
Strokes with short carriage (version "C")	max 6000 mm
Stroke tolerance	strokes ≤ 1000 mm = 0 / +0,6 mm strokes > 1000 mm = 0 / +3 mm
Connection	G1/8 (Ø 25; 32) G1/4 (Ø 40) G3/8 (Ø 50; 63)

CODING EXAMPLE

52	M	2	P	40	A	0500

52	SERIES	
M	VERSION M = standard G = with slide bearing R = with roller bearing (only Ø25 - 32 - 40)	
2	OPERATION 2 = double-acting, cushioned, with air supply from both sides 8 = double-acting, cushioned, with air supply from one side only	PNEUMATIC SYMBOLS CDSS (see the following pages) CDSS (see the following pages)
P	MATERIALS P = anodized AL profile tube, NBR and PU seals, standard carriage C = anodized AL profile, NBR and PU seals, short carriage	
40	BORE 25 = 25 mm 32 = 32 mm 40 = 40 mm 50 = 50 mm 63 = 63 mm	
A	TYPE OF MOUNTING A = standard	
0500	STROKE (see table)	

LOADS AND TORQUE FORCES Ø 25 - 32

COMPLEX LOADS
If more than one force and torque is applied simultaneously, they have to be calculated according to the following formula: L/L (max)+ Ls/Ls (max)+ M/M (max)+ Ms/Ms (max)+ Mv/Mv (max) ≤1.
For models 52M, the load and torque values refer to the center of the tube.
For models 52G/52R the load and torque values refer to the center point of the external guide. It is also necessary for these models to guarantee on the fixing surface a max 0.1 flatness's value.
The load and torque values refer to a velocity of: Models 52M/52G/52M/52G ≤ 0,2 m/s, models 52R ≤ 2 m/s.
Load adjustment coefficients can be found on the following page.

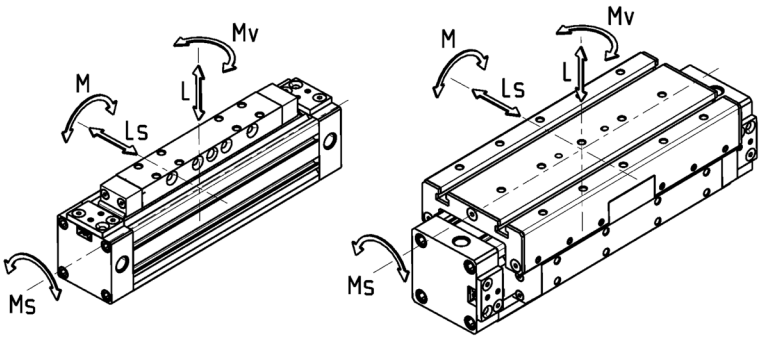

V	0.2 m/s	0.3 m/s	0.4 m/s	0.5 m/s	0.75 m/s	1 m/s
C	1	0.75	0.5	0.4	0.27	0.2

Table showing the maximum permitted loads and torque forces

Mod.	L Max (N)	Ls Max (N)	M Max (Nm)	Ms Max (Nm)	Mv Max (Nm)	Mass at 0 mm stroke (kg)	Additional mass per 100 mm (kg)
52M2P25A - 52M8P25A	270	-	13	2,5	11	0,88	0,30
52M2C25A - 52M8C25A	270	-	8	2	7	0,62	0,30
52G2P25A - 52G8P25A	580	580	23	10	23	1,31	0,30
52G2C25A - 52G8C25A	340	340	9	5	9	0,88	0,30
52R2P25A - 52R8P25A	850	1300	65	35	105	1,97	0,42
52R2C25A - 52R8C25A	850	1300	29	35	64	1,33	0,42
52M2P32A - 52M8P32A	300	-	30	3	24	1,40	0,39
52M2C32A - 52M8C32A	300	-	15	3	12	0,96	0,39
52G2P32A - 52G8P32A	850	850	33	15	33	2,09	0,39
52G2C32A - 52G8C32A	460	460	14	6,5	14	1,35	0,39
52R2P32A - 52R8P32A	900	1500	79	40	125	2,96	0,48
52R2C32A - 52R8C32A	900	1500	36	40	76	1,91	0,48

LOADS AND TORQUE FORCES Ø 40 - 50 - 63

COMPLEX LOADS
If more than one force and torque is applied simultaneously, they have to be calculated according to the following formula: L/L (max)+ Ls/Ls (max)+ M/M (max)+ Ms/Ms (max)+ Mv/Mv (max) ≤1.
For models 52M, the load and torque values refer to the center of the tube.
For models 52G/52R the load and torque values refer to the center point of the guide.
The load and torque values refer to a velocity of: Models 52M/52G ≤0,2 m/s
Models 52R ≤2 m/s
If the velocity exceeds 0.2m/s for the models 52M/52G, the load and torque values have to be multiplied by the coefficients according to the table.
Load adjustment coefficients can be found on the following page.

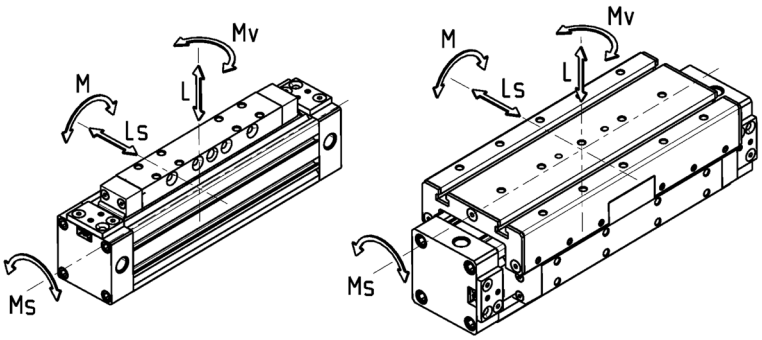

V	0.2 m/s	0.3 m/s	0.4 m/s	0.5 m/s	0.75 m/s	1 m/s
C	1	0.75	0.5	0.4	0.27	0.2

Table showing the maximum permitted loads and torque forces

Mod.	L Max (N)	Ls Max (N)	M Max (Nm)	Ms Max (Nm)	Mv Max (Nm)	Mass at 0 mm stroke (kg)	Additional mass per 100 mm (kg)
52M2P40A - 52M8P40A	650	-	60	4	54	2,41	0,52
52M2C40A - 52M8C40A	650	-	30	4	27	1,65	0,52
52G2P40A - 52G8P40A	1120	1120	60	25	60	3,58	0,52
52G2C40A - 52G8C40A	600	600	25	11	25	2,30	0,52
52R2P40A - 52R8P40A	1200	2000	190	67	118	5,89	0,74
52R2C40A - 52R8C40A	1200	2000	85	67	72	3,84	0,74
52M2P50A - 52M8P50A	800	-	80	17	74	5,30	0,96
52M2C50A - 52M8C50A	800	-	38	17	32	3,50	0,96
52G2P50A - 52G8P50A	1550	1500	200	70	200	7,28	0,96
52G2C50A - 52G8C50A	820	800	60	40	60	4,63	0,96
52M2P63A - 52M8P63A	1400	-	110	17	100	8,10	1,32
52M2C63A - 52M8C63A	1400	-	50	17	48	5,40	1,32
52G2P63A - 52G8P63A	2200	2000	300	102	300	11,02	1,32
52G2C63A - 52G8C63A	1100	1100	105	56	105	7,10	1,32

END CUSHION DIAGRAM AND LOAD ADJUSTMENT COEFFICIENTS

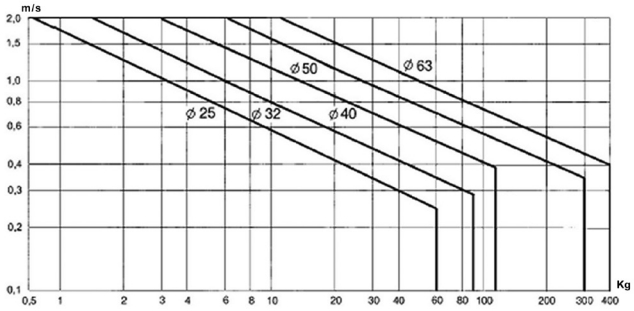

The end cushion regulating screw has to be regulated to obtain a smooth movement at the end of stroke.
In those applications which have different values than the ones stated in the diagram, external shock-absorbers have to be used.
The shock-absorber should be centrally located with respect to the center of the mass.
The diagram applies for horizontal operations.

LOAD ADJUSTMENT COEFFICIENTS

Speed	- Coefficient:
0,2 m/s	- 1
0,3 m/s	- 0,75
0,4 m/s	- 0,5
0,5 m/s	- 0,4
0,75 m/s	- 0,27
1 m/s	- 0,2

LOADS ACCORDING TO SUPPORTS DISTANCE

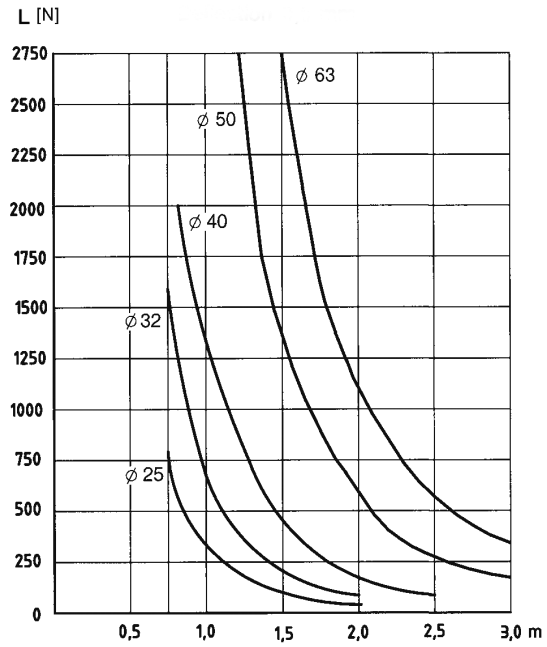

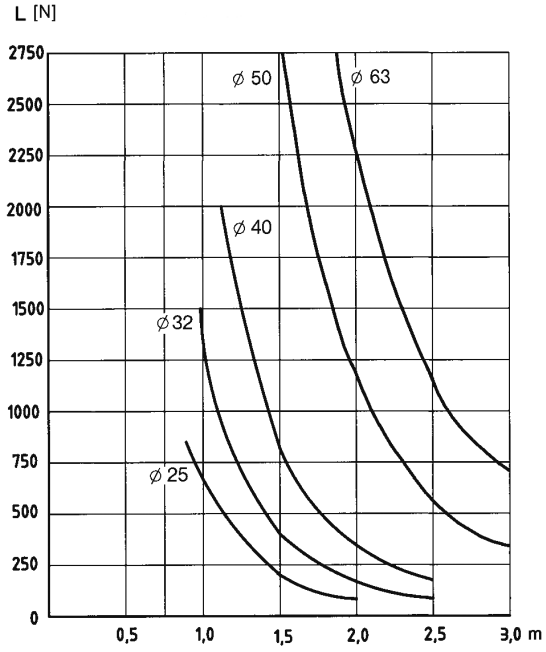

DEFLECTION 0.5 mm
The charts have been made according to a max. deflection of 0.5 mm and 1 mm when a load (N) is applied.
The charts give the max distance between two supports in order to stay within the deflection range given.

DEFLECTION 1 mm
The charts have been made according to a max. deflection of 0.5 mm and 1 mm when a load (N) is applied.
The charts give the max distance between two supports in order to stay within the deflection range given.

Cylinders with standard carriage Mod. 52M2P

The cylinder has two supply ports "I" for both endcovers. The operator needs to choose which one of the two ports to use on each endcover. The remaining port has to be closed with the supplied tap.

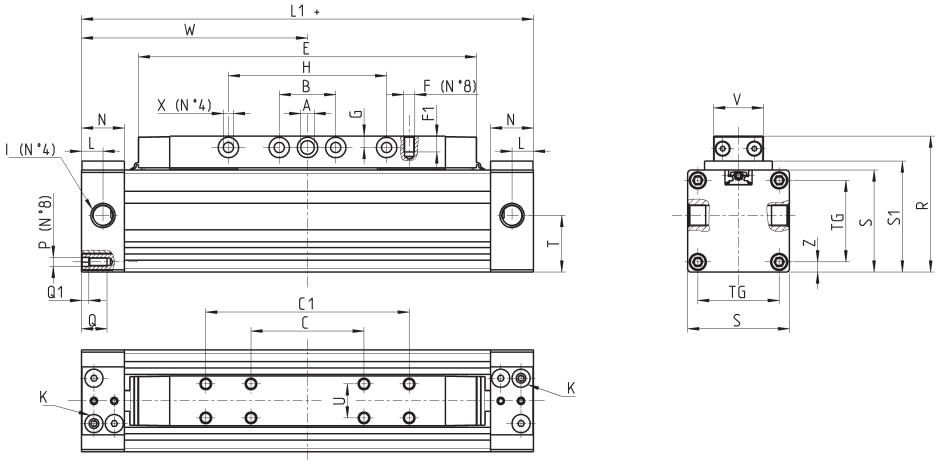

+ = add the stroke
K = cushion regulation screw

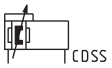

DIMENSIONS																										
Mod.	Ø	W	E	L1	I	B	G	N	L	øA	øX	S1	T	Z	C1	C	U	F	F1	H	V	S	R	P	TG	Q	Q1
52M2P25A	25	100	149,5	200	G1/8	25	5	19	9,5	6	4,5	49	25	4,5	90	50	15	M5	7	70	22	45	60	M4	36	11	3
52M2P32A	32	120	184,5	240	G1/8	25	5,5	19	9,5	6	5,5	58	32	7,5	130	45	15	M5	7	100	22	54	69	M5	41	11	4
52M2P40A	40	150	222,5	300	G1/4	25	7	23	11,5	7	6,5	68	38	7,5	160	90	15	M5	9	130	22	64	82	M6	49	12	4
52M2P50A	50	175	262	350	G3/8	35	9	30	17	10	8,5	94	59	12,5	150	60	34	M8	16	180	46	90	115	M8	65	17	5
52M2P63A	63	200	300	400	G3/8	50	9,5	30	17	10	8,5	110	68,5	14,0	240	80	34	M8	16	180	46	106	131	M8	78	17	5

Cylinders with standard carriage Mod. 52M8P

The cylinder has six supply ports (I) , three for one direction (x-h-w) , and the other three (y-z-k) for the opposite direction. With supporting feet (Mod. B-52 / BA-52), ports "h" and "z" have to be closed.

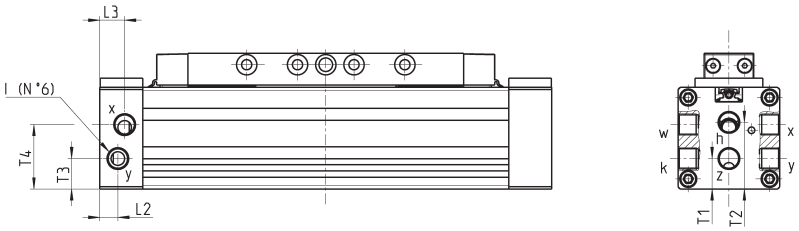

Where no dimensions are presented, refer to dimensions of cylinder model 52M2P.

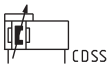

DIMENSIONS							
Mod.	Ø	T1	T2	T3	T4	L2	L3	I
52M8P25A	25	13,5	29,5	13,5	28,5	8	11	G1/8
52M8P32A	32	17,5	34,5	17,5	34,5	9,5	9,5	G1/8
52M8P40A	40	15,5	38	20,5	42,5	11,5	11,5	G1/4
52M8P50A	50	29,5	59	29	59	17	17	G3/8
52M8P63A	63	34	68,5	34	68,5	17	17	G3/8

Cylinders with short carriage Mod. 52M2C

The cylinder has two supply ports "I" for both endcovers. The operator needs to choose which one of the two ports to use on each end cover.The remaining port has to be closed with the supplied tap.

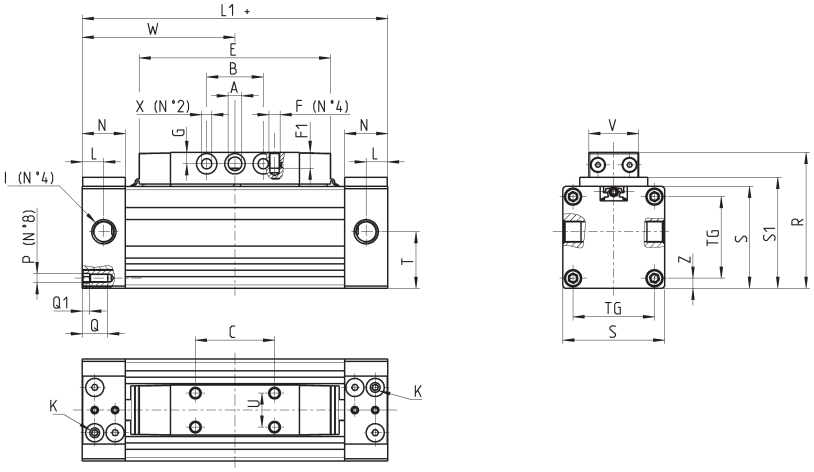

+ = add the stroke
K = cushion regulation screw

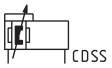

DIMENSIONS																									
Mod.	Ø	W	L	L1	I	B	G	N	E	øA	øX	R	C	F	F1	U	T	V	S	S1	TG	P	Z	Q	Q1
52M2C25A	25	67,5	9,5	135	G1/8	25	5	19	84,5	6	4,5	60	35	M5	7	15	25	22	45	49	36	M4	4,5	11	3
52M2C32A	32	77,5	9,5	155	G1/8	25	5,5	19	99,5	6	5,5	69	45	M5	7	15	32,5	22	54	58	41	M5	7,5	11	4
52M2C40A	40	95	11,5	190	G1/4	25	7	23	112,5	7	6,5	82	50	M5	9	15	38,5	22	64	68	49	M6	7,5	12	4
52M2C50A	50	105	17	210	G3/8	35	9	30	122	10	8,5	115	64	M8	16	34	59	46	90	94	65	M8	12,5	17	5
52M2C63A	63	125	17	250	G3/8	50	9,5	30	150	10	8,5	131	80	M8	16	34	68,5	46	106	110	78	M8	14	17	5

Cylinders with short carriage Mod. 52M8C

The cylinder has six supply ports (I) , three for one direction (x-h-w) , and the other three (y-z-k) for the opposite direction. With supporting feet (Mod. B-52 / BA-52), ports "h" and "z" have to be closed.

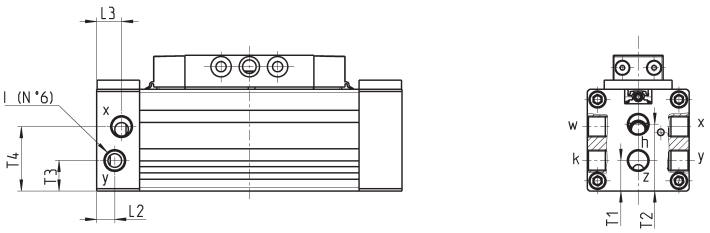

Where no dimensions are presented, refer to dimensions of cylinder model 52M2C.

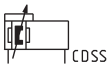

DIMENSIONS							
Mod.	Ø	T1	T2	T3	T4	L2	L3	I
52M8C25A	25	13,5	29,5	13,5	28,5	8	11	G1/8
52M8C32A	32	17,5	34,5	17,5	34,5	9,5	9,5	G1/8
52M8C40A	40	15,5	38	20,5	42,5	11,5	11,5	G1/4
52M8C50A	50	29,5	59	29	59	17	17	G3/8
52M8C63A	63	34	68,5	34	68,5	17	17	G3/8

Cylinders with slide bearing Mod. 52G2P

The cylinder has two supply ports "I" for both endcovers. The operator needs to choose which one of the two ports to use on each end cover. The remaining port has to be closed with the supplied tap.

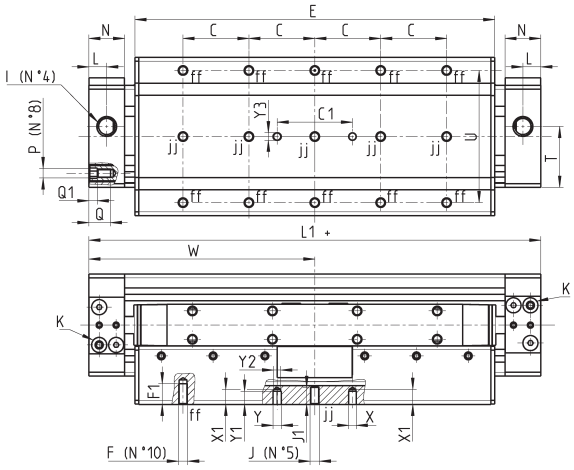

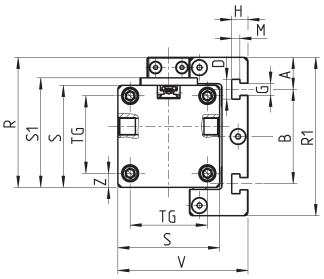

jj = these holes are present in cylinder Ø32 only
+ add the stroke
K = cushion regulation screw

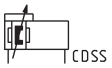

DIMENSIONS																																		
Mod.	Ø	W	E	L1	I	L	T	U	N	C	F	F1	D	B	A	H	G	M	J	J1	TG	Z	S	R1	P	V	Q	Q1	ø Y2	Y	ø X	Y1	X1	Y3	C1	S1	R
52G2P25A	25	100	159	200	G1/8	9,5	25	30	19	30	M5	8	10,5	50	12,5	8,5	6,5	4,5	-	-	36	4,5	45	75	M4	59	11	3	4	4,5	4	4,5	5,5	4	40	49	60
52G2P32A	32	120	191	240	G1/8	9,5	32,5	70	19	35	M5	11	10,5	50	17	8,5	6,5	4,5	M5	9	41	7,5	54	84	M5	69	11	4	4	4,5	4	7	8	4	40	58	69
52G2P40A	40	150	246	300	G1/4	11,5	38	55	23	55	M6	12	10,5	80	10	8,5	6,5	4,5	-	-	49	7,5	64	100	M6	79	12	4	6	6,5	6	7	8	6	40	68	82
52G2P50A	50	175	270	350	G3/8	17	59	42	30	50	M8	16	10,5	94	23	8,5	6,5	4,5	-	-	65	12,5	90	133	M8	112,5	17	5	-	6,5	6	3	3	6	40	94	115
52G2P63A	63	200	320	400	G3/8	17	68,5	60	30	60	M8	16	10,5	110	24	8,5	6,5	4,5	-	-	78	14	106	150	M8	134,5	17	5	-	6,5	6	6,5	6,5	6	40	110	132

Cylinders with slide bearing Mod. 52G8P

The cylinder has six supply ports (I) , three for one direction (x-h-w) , and the other three (y-z-k) for the opposite direction. With supporting feet (Mod. B-52 / BA-52), ports "h" and "z" have to be closed.

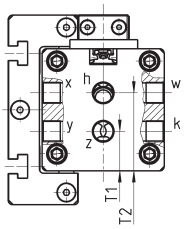

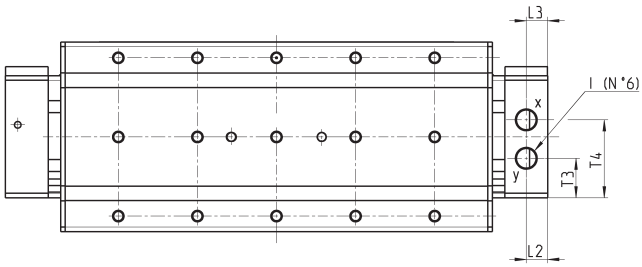

Where no dimensions are presented, refer to dimensions of cyl. mod. 52G2P. The guide can be applied on the right side, if requested.

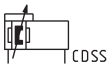

DIMENSIONS							
Mod.	Ø	T1	T2	T3	T4	L2	L3	I
52G8P25A	25	13,5	29,5	13,5	28,5	8	11	G1/8
52G8P32A	32	17,5	34,5	17,5	34,5	9,5	9,5	G1/8
52G8P40A	40	15,5	38	20,5	42,5	11,5	11,5	G1/4
52G8P50A	50	29,5	59	29	59	17	17	G3/8
52G8P63A	63	34	68,5	34	68,5	17	17	G3/8

Cylinders with slide bearing Mod. 52G2C

The cylinder has two supply ports "I" for both endcovers. The operator needs to choose which one of the two ports to use on each end cover. The remaining port has to be closed with the supplied tap.

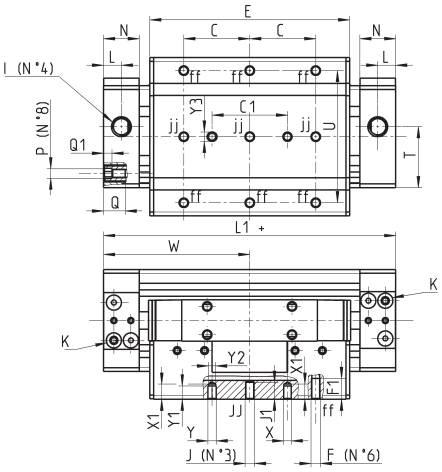

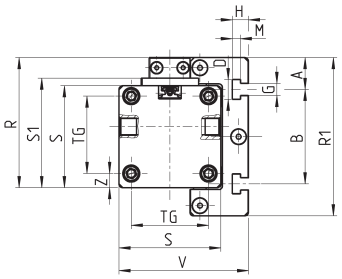

jj = these holes are present in cylinder Ø32 only
+ add the stroke
K = cushion regulation screw
The drawing show Ø32

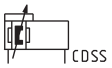

DIMENSIONS																																			
Mod.	Ø	W	E	L1	I	L	T	U	N	C	F	F1	D	B	A	H	G	M	J	J1	TG	Z	S	R1	P	V	Q	Q1	ø Y2	Y	ø X	Y1	X1	Y3	C1	S1	R
52G2C25A	25	67,5	94	135	G1/8	9,5	25	30	19	30	M5	8	10,5	50	12,5	8,5	6,5	4,5	-	-	36	4,5	45	75	M4	59	11	3	4	4,5	4	4,5	5,5	4	40	49	60
52G2C32A	32	77,5	106	155	G1/8	9,5	32,5	70	19	35	M5	11	10,5	50	17	8,5	6,5	4,5	M5	9	41	7,5	54	84	M5	69	11	4	4	4,5	4	7	8	4	40	58	69
52G2C40A	40	95	136	190	G1/4	11,5	38,5	55	23	55	M6	12	10,5	80	10	8,5	6,5	4,5	-	-	49	7,5	64	100	M6	79	12	4	6	6,5	6	7	8	6	40	68	82
52G2C50A	50	105	148	210	G3/8	17	59	42	30	50	M8	16	10,5	94	23	8,5	6,5	4,5	-	-	65	12,5	90	133	M8	113	17	5	-	6,5	6	3	3	6	40	94	115
52G2C63A	63	125	180	250	G3/8	17	68,5	60	30	60	M8	16	10,5	110	24	8,5	6,5	4,5	-	-	78	14	106	150	M8	134,5	17	5	-	6,5	6	6,5	6,5	6	40	110	132

Cylinders with slide bearing Mod. 52G8C

The cylinder has six supply ports (I) , three for one direction (x-h-w),and the other three for the opposite direction (y-z-k). With supporting feet (mod. B-52 / BA-52), ports "h" and "z" have to be closed .

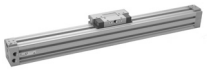

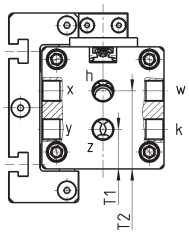

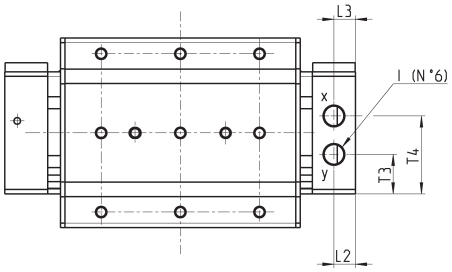

Where no dimensions are presented, refer to dimensions of cylinder model 52G2C. The guide can be applied on the right side, if requested.

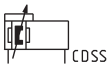

DIMENSIONS							
Mod.	Ø	T1	T2	T3	T4	L2	L3	I
52G8C25A	25	13,5	29,5	13,5	28,5	8	11	G1/8
52G8C32A	32	17,5	34,5	17,5	34,5	9,5	9,5	G1/8
52G8C40A	40	15,5	38	20,5	42,5	11,5	11,5	G1/4
52G8C50A	50	29,5	59	29	59	17	17	G3/8
52G8C63A	63	34	68,5	34	68,5	17	17	G3/8

Cylinders with roller bearings Mod. 52R2P

The cylinder has two supply ports "I" for both endcovers. The operator needs to choose which one of the two ports to use on each end cover. The remaining port has to be closed with the supplied tap.

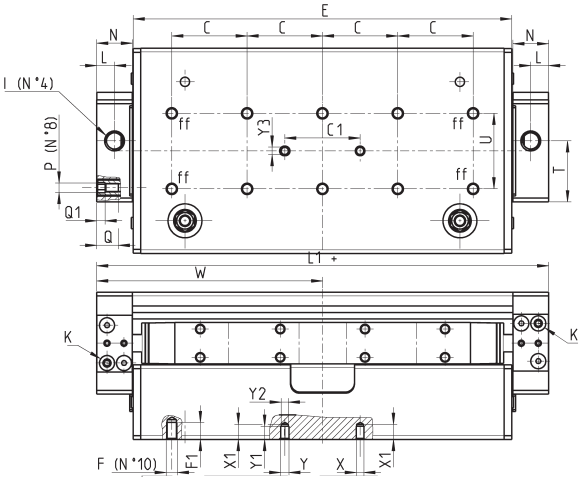

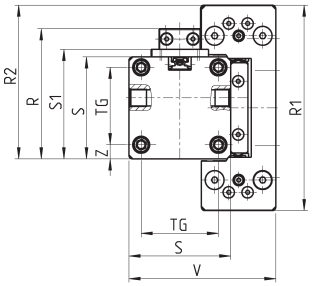

ff = these holes are not present in cylinder Ø 25
+ add the stroke
K = cushion regulation screw

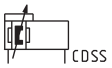

DIMENSIONS																													
Mod.	Ø	W	E	L1	I	L	T	U	N	C	F	F1	TG	Z	S	R1	P	V	Q	Q1	ø Y2	Y	ø X	Y1	X1	Y3	C1	S1	R2	R
52R2P25A	25	100	160	200	G1/8	9.5	25	40	19	40	M5	7.5	36	4.5	45	97	M4	68	11	3	4	4.5	4	7	8	4	40	49	71	60
52R2P32A	32	120	201	240	G1/8	9.5	32.5	40	19	40	M6	9	41	7.5	54	109	M5	78	11	4	4	4.5	4	7	8	4	40	58	81.5	69
52R2P40A	40	150	252	300	G1/4	11.5	38	55	23	55	M6	12	49	7.5	64	145	M6	90.5	12	4	6	6.5	6	7	8	6	40	68	104.5	82

Cylinders with roller bearings Mod. 52R8P

The cylinder has six ports, three for one direction (x-h-w), and the other three (y-z-k) for the opposite direction. With supporting feet (Mod. B-52 / BA-52), ports "h" and "z" have to be closed.

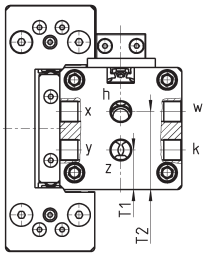

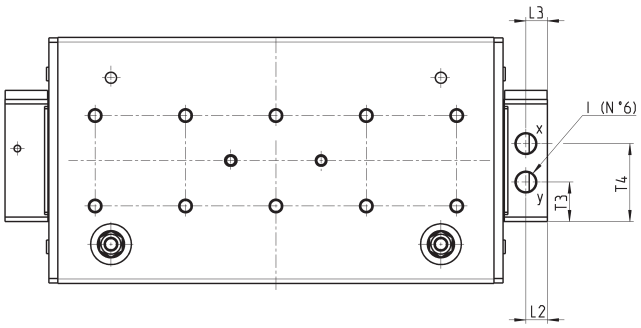

Where no dimensions are presented, refer to dimensions of cylinder model 52R2P. The guide can be applied on the right side, if requested.

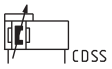

DIMENSIONS							
Mod.	Ø	T1	T2	T3	T4	L2	L3	I
52R8P25A	25	13,5	29,5	13,5	28,5	8	11	G1/8
52R8P32A	32	17,5	34,5	17,5	34,5	9,5	9,5	G1/8
52R8P40A	40	15,5	38	20,5	42,5	11,5	11,5	G1/4

Cylinders with roller bearings Mod. 52R2C

The cylinder has two supply ports "I" for both endcovers. The operator needs to choose which one of the two ports to use on each end cover. The remaining port has to be closed with the supporting tap.

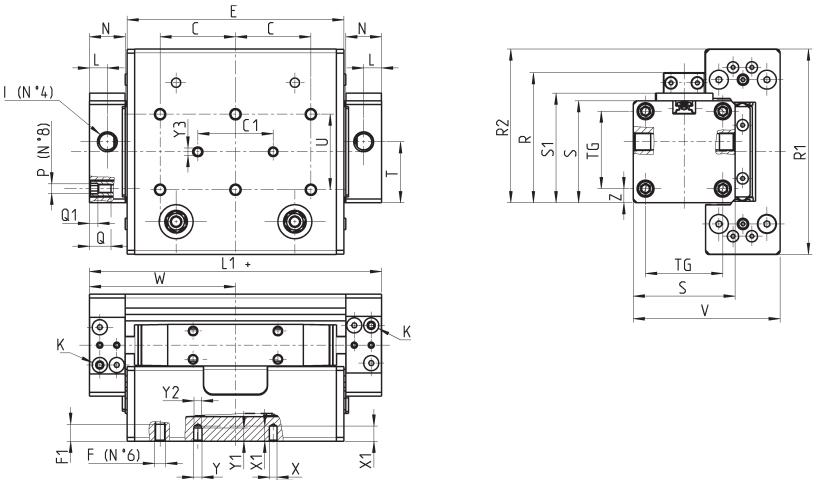

+ = add the stroke
K = cushion regulation screw

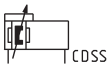

DIMENSIONS																												
Mod.	Ø	W	E	L1	I	L	T	U	N	C	F	F1	TG	Z	S	R1	P	V	Q	Q1	øY2	Y	øX	Y1	X1	Y3	C1	S1	R2	R
52R2C25A	25	67.5	95	135	G1/8	9.5	25	40	19	20	M5	7.5	36	4.5	45	97	M4	68	11	3	4	4.5	4	7	8	4	40	49	71	60
52R2C32A	32	77.5	115	155	G1/8	9.5	32.5	40	19	40	M6	9	41	7.5	54	109	M5	78	11	4	4	4.5	4	7	8	4	40	58	81.5	69
52R2C40A	40	95	143.5	190	G1/4	11.5	38	55	23	55	M6	12	49	7.5	64	145	M6	90.5	12	4	6	6.5	6	7	8	6	40	68	104.5	82

Cylinders with roller bearings Mod. 52R8C

The cylinder has six supply ports (I) , three for one direction (x-h-w) , and the other three (y-z-k) for the opposite direction. With supporting feet (Mod. B-52 / BA-52), ports "h" and "z" have to be closed.

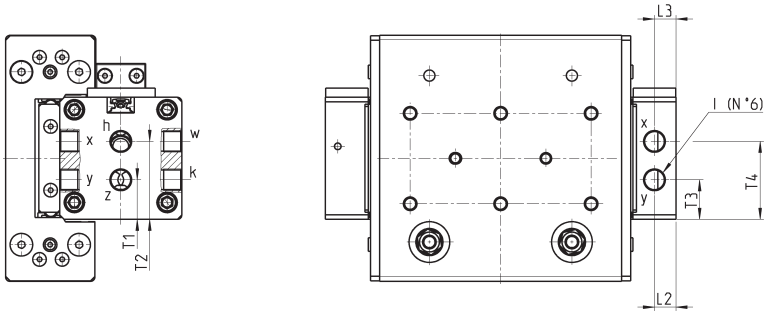

Where no dimensions are presented, refer to dimensions of cylinder model 52R2C. The guide can be applied on the right side, if requested.

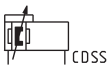

DIMENSIONS							
Mod.	Ø	T1	T2	T3	T4	L2	L3	I
52R8C25A	25	13,5	29,5	13,5	28,5	8	11	G1/8
52R8C32A	32	17,5	34,5	17,5	34,5	9,5	9,5	G1/8
52R8C40A	40	15,5	38	20,5	42,5	11,5	11,5	G1/4

Foot mount Mod. B-52

The following is supplied:
2x feet
4x screws

+ = add the stroke

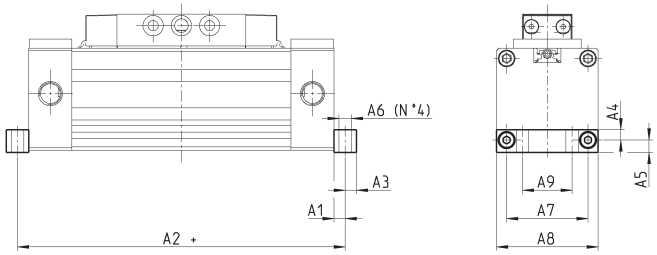

DIMENSIONS											
Mod.	Ø	A1	A2 Series 52...P...	A2 Series 52...C...	A3	A4	A5	Ø A6	A7	A8	A9
B-52-25	25	5	210	145	5	4,5	5,5	5,5	36	45	22
B-52-32	32	7,5	255	170	7,5	7,5	8,5	7	41	51	25
B-52-40	40	7,5	315	205	7,5	7,5	8,5	9	49	64	25
B-52-50	50	7,5	365	225	7,5	12,5	13,5	8.5	65	89	40
B-52-63	63	7,5	415	265	7,5	14	15	8.5	78	105	50

Foot mount Mod. BA-52

These are to be used with intermediate bracket (Mod. BH-52... and BL-52...)

The following is supplied:
2x feet
4x screws

+ = add the stroke

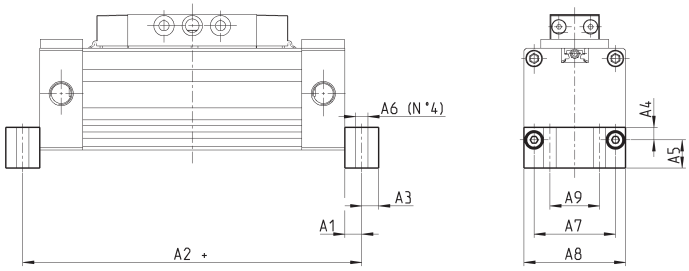

DIMENSIONS											
Mod.	Ø	A1	A2 Series 52...P...	A2 Series 52...C...	A3	A4	A5	Ø A6	A7	A8	A9
BA-52-25	25	7,5	215	150	7,5	5,5	12,5	5,5	36	45	22
BA-52-32	32	7,5	255	170	7,5	16,5	17,5	7	41	51	25
BA-52-40	40	7,5	315	205	7,5	8,5	17,5	9	49	64	25
BA-52-50	50	7,5	365	225	7,5	12,5	27,5	8,5	65	89	40
BA-52-63	63	7,5	415	265	7,5	11	29	8,5	78	105	50

Intermediate brackets Mod. BH and BL 52-32

Assembling by using two intermediate brackets without using the feet bracket.

The following is supplied:
1x intermediate bracket
4x screws

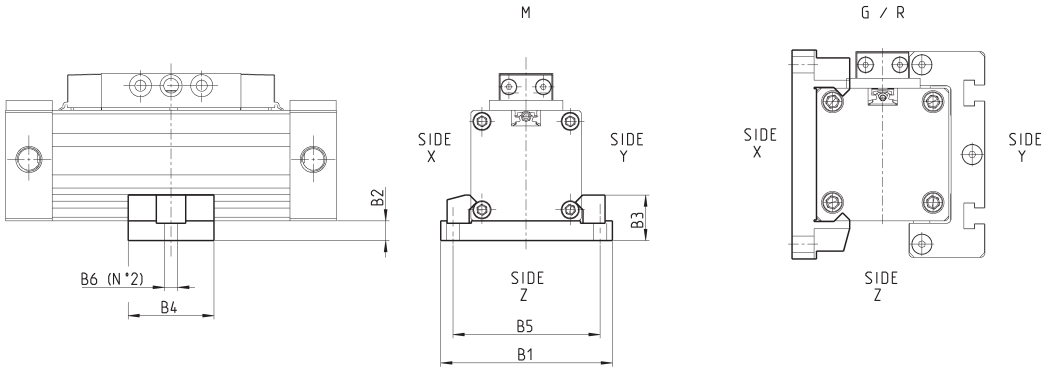

DIMENSIONS								
Mod.	Ø	B1	B2	B3	B4	B5	Ø B6	
BH-52-25	25	70	8	18.5	35	60	5.5	for cylinders vers. M mounting on sides X, Y, Z - for cylinders vers. G or R mounting on sides X and Y
BH-52-32	32	85	10	23.5	40	73	6.5	for cylinders vers. M mounting on side Z
BL-52-32	32	85	10	23.5	40	73	6.5	for cylinders vers. M, G or R mounting on sides X and Y
BH-52-40	40	105	10	23.5	40	90.5	9	for cylinders vers. M mounting on sides X, Y, Z - for cylinders vers. G or R mounting on sides X and Y
BH-52-50	50	138	15	30	70	120	11	for cylinders vers. M mounting on sides X, Y, Z - for cylinders vers. G or R mounting on sides X and Y
BH-52-63	63	154	15	36	70	136	11	for cylinders vers. M mounting on sides X, Y, Z - for cylinders vers. G or R mounting on sides X and Y

Self-compensating adaptor Mod. CF-52

The self-compensating adaptor is used to compensate the difference between the rodless cylinder and the external guide system. Suitable for cylinders mod. 52M2P/52M2C/52M8P/52M8C.

The following is supplied:
1x adaptor
1x pin
2x feet
2x seeger

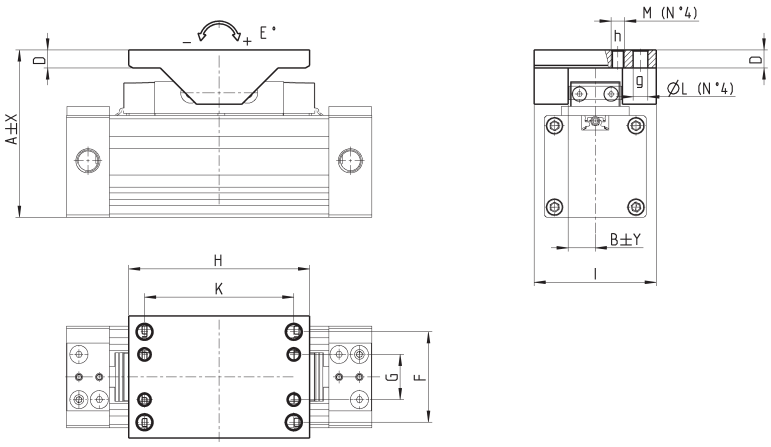

DIMENSIONS													
Mod.	Ø	A	X	E°	B	Y	D	I	F	G	H	K	Ø L	M
CF-52-25-32	25	74	1	±8	12	0,8	8	54	40	20	80	66	6,5	M6
CF-52-25-32	32	82	0,5	±6	12	0,8	8	54	40	20	80	66	6,5	M6
CF-52-40	40	94,5	0,5	±6	12	0,8	8	54	40	20	80	66	6,5	M6
CF-52-50-63	50	130,5	0,5	±5	24	0,8	11	80	51	23	122	102	9	M8
CF-52-50-63	63	146	0,5	±4,5	24	0,8	11	80	51	23	122	102	9	M8

Series CST-CSV-CSH, CSB-CSC-CSD, CSG magnetic proximity switches

New models

Reed
Magnetoresistive - Hall effect (Series CST, CSV, CSH only)

- Series CST, CSV, CSH, CSG switches: integrated in the actuator profile, with or without M8 connector and new ATEX version
- Series CSB switches: for grippers CGA, CGP
- Series CSC switches: for grippers CGLN
- Series CSD switches: for grippers CGSN, CGPT, CGPS, RPGB, CGCN, CGZT
- Series CSG switches: ATEX and UL certified

The magnetic proximity switches define the position of the piston in cylinders or grippers. When the internal contact is actuated by a magnetic field, the sensors complete an electrical circuit and provide an output signal to actuate directly a solenoid valve or a PLC. A yellow or red LED diode shows when the internal magnetic contact is closed.

The switches are available in two different versions - Reed with mechanical switching and with electronic switching - and they are subdivided into Hall effect and Magnetoresistive. The electronic versions are suggested for heavy duty with frequent operations and strong vibrations.

SERIES CST, CSV, CSH GENERAL DATA

Operation	Reed contact Magnetoresistive Hall effect
Type of output	Static or electronic PNP
Type of contact in Reed switches	Normally Open (NO) Normally Closed (NC)
Voltage	see the characteristics of each model
Max current	see the characteristics of each model
Max load	8 W DC and 10 VA AC (Reed)
Protection class	IP67
Materials	plastic body encapsulating epoxy resin; cable in PVC, connector in PVR, connector body in PU
Mounting	directly into the groove or by means of adapters
Signalling	by means of a yellow diode Led
Protections	see the characteristics of each model
Switching time	<1,8 ms (Reed); <1 ms (Magnetoresistive - Hall effect)
Operating temperature	-10°C ÷ 80°C
Electrical duration	10.000.000 cycles (Reed); 1.000.000.000 cycles (Magnetoresistive - Hall effect)
Electrical connections	with a 2-wire cable, section 2x0.14, 2m (standard), high flexibility; with a 3-wire cable, section 3x0.14, 2m (standard), high flexibility; with a M8 connector and cable of 0.3 m

SERIES CST, CSV, CSH CODING EXAMPLE

CS	T	-	2	2	0	N	-	5	EX

CS	SERIES
T	TYPE OF SLOT: T = T-slot V = V-slot H = H-slot
2	OPERATION: 2 = Reed NO 3 = Magnetoresistive 4 = Reed NC 5 = Hall effect
2	CONNECTIONS: 2 = 2 wires (Reed only) 3 = 3 wires 5 = 2 wires with M8 connector (Reed only) 6 = 3 wires with M8 connector
0	POWER SUPPLY VOLTAGE: 0 = 10 ÷ 110 V DC; 10 ÷ 230 V AC (PNP) 1 = 30 ÷ 110 V DC; 30 ÷ 230 V AC (PNP) 2 = 3 wires cst (PNP) 3 = 10 ÷ 30 V AC/DC (PNP) 4 = 10 ÷ 27 V DC (PNP)
N	NOTE (CST/CSV-250N only): N = according to norm
5	LENGTH OF THE CABLE: = 2m (CST and CSV only) 2 = 2m (CSH only) 5 = 5m
EX	

SERIES CSB, CSC, CSD GENERAL DATA

Funcionamiento	Contacto Reed (CSB, CSC solo) Magnetoresistivo (CSD solo)
Tipo de salida	-
Tipo de contacto en sensors Reed	Normalmente abierto (NO)
Tensión	Ver las características de cada modelo
Corriente máx.	Ver las características de cada modelo
Carga máx.	8 W DC y 10 VA AC
Grado de protección	IP66
Materiales	Cuerpo de plástico encamsulado en resina epoxi
Montaje	Directamente en las ranuras
Señalización	Por medio de un Led rojo
Protecciones	Ver las características de cada modelo
Tiempo de conmutación	<1 ms
Temperatura de funcionamiento	-10°C ÷ 60°C
Vida eléctrica	-
Conexiones eléctricas	con cable de 2 hilos, sección 2x0.14, 2m (estándar), alta flexibilidad (CSB, CSC solo); con cable de 3 hilos, sección 3x0.14, 2m (estándar), alta flexibilidad (CSD solo); Con conector M8 y cables de 0.3 m (CSD solo)

SERIES CSB, CSC, CSD CODING EXAMPLE

CS	B	-	D	-	2	2	0	-	

CS	SERIES
B	TYPE OF SLOT: B = B-slot C = C-slot D = D-slot
D	CABLE OUTPUT: D = straight H = 90°
2	OPERATION: 2 = Reed NC (CSB, CSC only) 3 = Magnetoresistive (CSD only)
2	CONNECTIONS: 2 = 2 wires (CSB, CSC only) 3 = 3 wires (CSD only) 6 = 3 wires with M8 connector (CSD only)
0	POWER SUPPLY VOLTAGE: 0 = 10 ÷ 110 V DC/AC (CSB, CSC only) 4 = 10 ÷ 27 V DC PNP (CSD only)
	LENGTH OF THE CABLE: = 2m (standard) 5 = 5m

SERIES CSG GENERAL DATA

Operation	Reed contact Magnetoresistive
Type of output	Static or electronic PNP and NPN
Type of contact in Reed switches	Normally Open (NO)
Voltage	see the characteristics of each model
Max current	see the characteristics of each model
Max load	see the code tables
Protection class	IP67
Materials	plastic body encapsulating epoxy resin; cable in PU
Mounting	directly into the groove or by means of adapters directly into the groove
Signalling	by means of a LED (colours are indicated in the code tables)
Protections	never exceed the maximum voltages and currents
Switching time	<5 ms (Reed); <1 ms (Magnetoresistive)
Operating temperature	-10°C ÷ 70°C (-10°C ÷ 60°C only for Reed version, 2 wires UL)
Electrical connections	with a 2-wire cable, external section 2,8 x 2 wires PU; with a 3-wire cable, external section 2,8 x 3 wires PU

SERIES CSG CODING EXAMPLE

CS	G	-	2	2	3	-	2	-	UL

CS	SERIES
G	TYPE OF SLOT: G = T-slot
2	OPERATION: 2 = Reed Normally Open 3 = Magnetoresistive PNP 5 = Magnetoresistive NPN 6 = Magnetoresistive PNP Normally Closed 7 = Magnetoresistive NPN Normally Closed
2	CONNECTIONS: 2 = 2 wires 3 = 3 wires
3	POWER SUPPLY VOLTAGE: 3 = 5/10 ÷ 30 V AC/DC (PNP) 4 = 10 ÷ 28 V DC (PNP)
2	LENGTH OF THE CABLE: 2 = 2m 5 = 5m 10 = 10 m
UL	CERTIFICATION: EX = ATEX certification UL = UL certification

SWITCHES ELECTRICAL CONNECTIONS

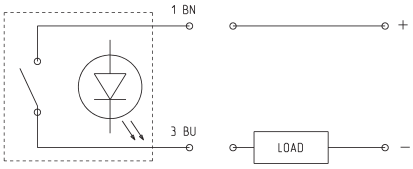

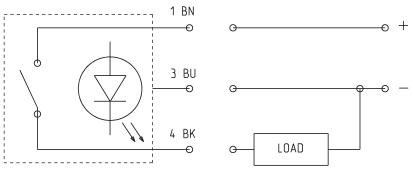

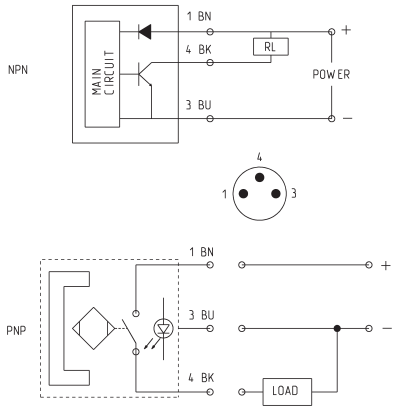

Reed switches
BN = brown
BU = blue
BK = black

Magnetoresistive and Hall effect switches
BN = brown
BU = blue
BK = black

Connecting schemes in series

The 3-wire version of the Reed sensors has been designed to allow the connection of several sensors in series, as there is no voltage drop between the supply and the load.
See connecting scheme.
The voltage drop is 2.8V for the 2-wire Reed sensors and 1.0V for 3-wire Magnetoresistive and Hall effect sensors.

1 BN = Brown
3 BU = Blue
4 BK = Black
L = load

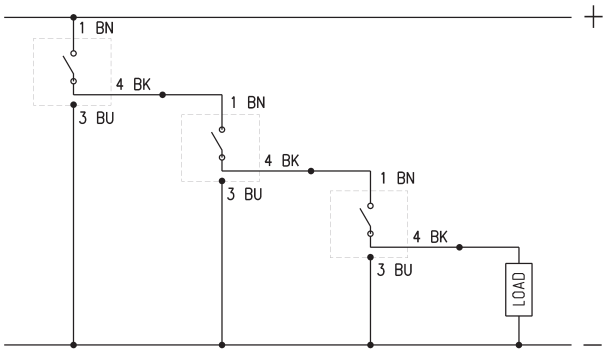

Magnetic proximity switches with 2- or 3-wire cable for T-slot

Note for 2-wire switches Mod. CST-220, CST-220-5:
in case of polarity reversing the sensor will still be operating, but the LED diode won't turn on.

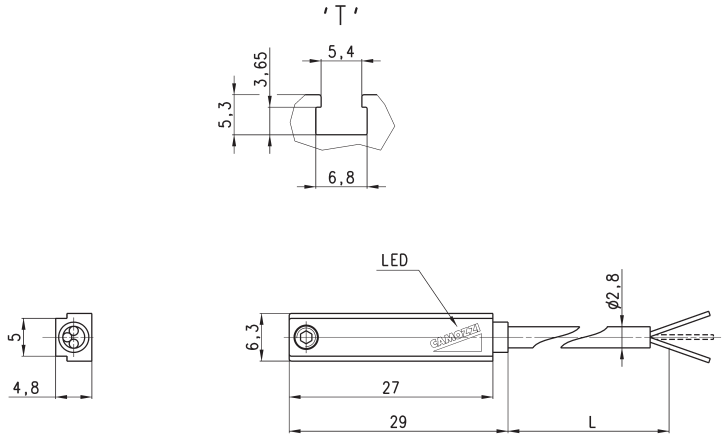

Mod.	Operation	Connections	Voltage	Output	Max. current	Max Load	Protection	L = length cable
CST-220	Reed	2 wires	10 ÷ 110 V AC/DC-230 V AC	-	250 mA	10 VA / 8W	None	2 m
CST-220-5	Reed	2 wires	10 ÷ 110 V AC/DC-230 V AC	-	250 mA	10 VA / 8 W	None	5 m
CST-220-12	Reed	2 wires	10 ÷ 110 V AC/DC-230 V AC	-	250 mA	10 VA / 8W	None	12 m
CST-220EX	Reed	2 wires	10 ÷ 110 V AC/DC-230 V AC	-	250 mA	10 VA / 8W	None	2 m
CST-220-5EX	Reed	2 wires	10 ÷ 110 V AC/DC-230 V AC	-	250 mA	10 VA / 8W	None	5 m
CST-220-12EX	Reed	2 wires	10 ÷ 110 V AC/DC-230 V AC	-	250 mA	10 VA / 8W	None	12 m
CST-232	Reed	3 wires	5 ÷ 30 V AC/DC	PNP	250 mA	10 VA / 8 W	Against polarity reversing	2 m
CST-232-5	Reed	3 wires	5 ÷ 30 V AC/DC	PNP	250 mA	10 VA / 8 W	Against polarity reversing	5 m
CST-232EX	Reed	3 wires	5 ÷ 30 V AC/DC	PNP	250 mA	10 VA / 8W	Against polarity reversing	2 m
CST-232-5EX	Reed	3 wires	5 ÷ 30 V AC/DC	PNP	250 mA	10 VA / 8W	Against polarity reversing and overvoltage	5 m
CST-332	Magnetoresistive	3 wires	10 ÷ 27 V DC	PNP	100 mA	6 W	Against polarity reversing and overvoltage	2 m

Magnetic proximity switches with 2- or 3-wire cable for V-slot

Note for 2-wire switch Mod. CSV-220:
In case of polarity reversing the sensor will still be operating, but the LED diode won't turn on.

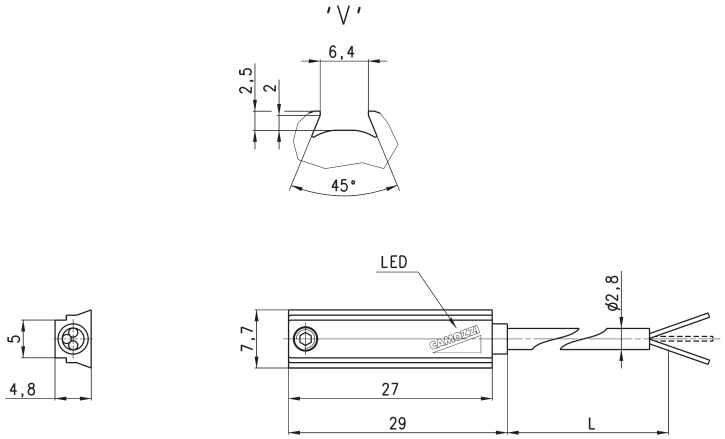

Mod.	Operation	Connections	Voltage	Output	Max. current	Max Load	Protection	L = length cable
CSV-220	Reed	2 wires	10 ÷ 110 V AC/DC-230 V AC	-	250 mA	10 VA / 8 W	None	2 m
CSV-232	Reed	3 wires	5 ÷ 30 V AC/DC	PNP	250 mA	10 VA / 8W	Against polarity reversing	2 m
CSV-332	Magnetoresistive	3 wires	10 ÷ 27 V DC	PNP	100 mA	6 W	Against polarity reversing and overvoltage	2 m

Magnetic proximity switches with M8 3-pin connector for T-slot

Note for 2-wire switch Mod. CST-250N:
in case of polarity reversing the sensor will still be operating, but the LED diode won't turn on.

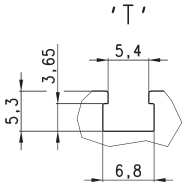

Cable length: 0.3 m

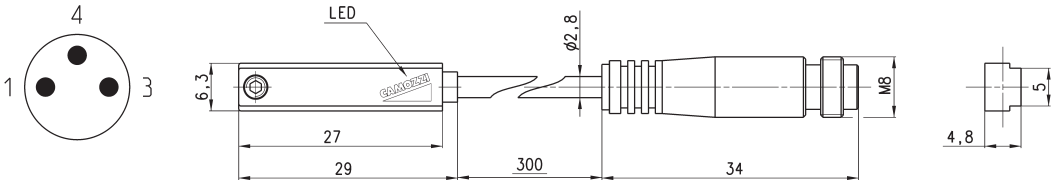

Mod.	Operation	Connection	Voltage	Output	Max. current	Max load	Protection
CST-250N	Reed	2 wires M8 male 3 pin	10 ÷ 110 V AC/DC	-	250 mA	10 VA / 8 W	None
CST-250NEX	Reed	2 wires M8 male 3 pin	10 ÷ 110 V AC/DC	-	250 mA	10 VA / 8 W	None
CST-262	Reed	3 wires M8 male 3 pin	5 ÷ 30 V AC/DC	PNP	250 mA	10 VA / 8 W	Against polarity reversing
CST-262EX	Reed	3 wires M8 male 3 pin	5 ÷ 30 V AC/DC	PNP	250 mA	10 VA / 8 W	Against polarity reversing
CST-362	Magnetoresistive	3 wires M8 male 3 pin	10 ÷ 27 V DC	PNP	100 mA	6 W	Against polarity reversing and overvoltage
CST-362EX	Magnetoresistive	3 wires M8 male 3 pin	10 ÷ 27 V DC	PNP	100 mA	6 W	Against polarity reversing and overvoltage
CST-562	Hall effect	3 wires M8 male 3 pin	10 ÷ 27 V DC	PNP	100 mA	6 W	Against polarity reversing and overvoltage
CST-562EX	Hall effect	3 wiresM8 male 3 pin	10 ÷ 27 V DC	PNP	100 mA	6 W	Against polarity reversing and overvoltage

Magnetic proximity switches with M8 3-pin connector for V-slot

Note for 2-wire switch Mod. CSV-250N:
in case of polarity reversing the sensor will still be operating, but the LED diode won't turn on.

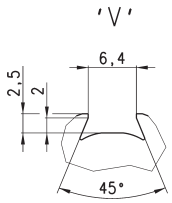

Cable length: 0.3 m

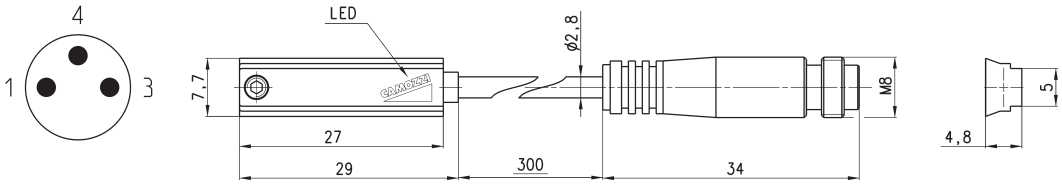

Mod.	Operation	Connection	Voltage	Output	Max. current	Max load	Protection
CSV-250N	Reed	2 wires M8 male 3 pin	10 ÷ 110 V AC/DC	-	250 mA	10 VA / 8 W	None
CSV-262	Reed	3 wires M8 male 3 pin	5 ÷ 30 V AC/DC	PNP	250 mA	10 VA / 8 W	Against polarity reversing
CSV-362	Magnetoresistive	3 wires M8 male 3 pin	10 ÷ 27 V DC	PNP	100 mA	6 W	Against polarity reversing and overvoltage

Magnetic proximity switches with 2- or 3-wire cable for H-slot

Note for 2-wire switches Mod. CSH-223-2, CSH-223-5, CSH-221-2, CSH-221-5:
in case of polarity reversing the sensor will still be operating, but the LED diode won't turn on.

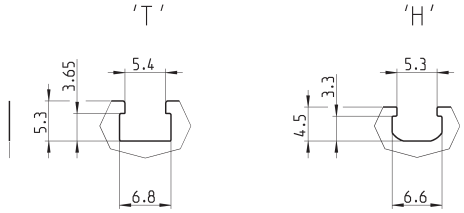

Suitable also for T-slots

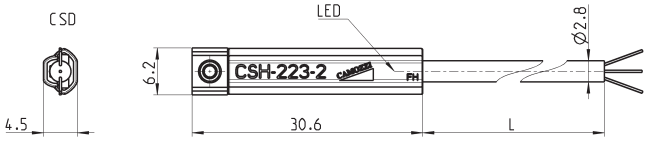

Mod.	Operation	Connection	Voltage	Output	Max current	Max load	Protection	L = cable legth
CSH-223-2	Reed	2 wires	10 ÷ 30 V AC/DC	-	250 mA	10 VA / 8 W	Against polarity reversing	2 m
CSH-223-5	Reed	2 wires	10 ÷ 30 V AC/DC	-	250 mA	10 VA / 8 W	Against polarity reversing	5 m
CSH-223-10	Reed	2 wires	10 ÷ 30 V AC/DC	-	250 mA	10 VA / 8 W	Against polarity reversing and overvoltage	10 m
CSH-223-2EX	Reed	2 wires	10 ÷ 30 V AC/DC	-	250 mA	10 VA / 8 W	Against polarity reversing and overvoltage	2 m
CSH-223-5EX	Reed	2 wires	10 ÷ 30 V AC/DC	-	250 mA	10 VA / 8 W	Against polarity reversing	5 m
CSH-223-10EX	Reed	2 wires	10 ÷ 30 V AC/DC	-	250 mA	10 VA / 8 W	Against polarity reversing	10 m
CSH-221-2	Reed	2 wires	30 ÷ 230 V AC - 30 ÷ 110 V DC	-	250 mA	10 VA / 8 W	Against polarity reversing	2 m
CSH-221-5	Reed	2 wires	30 ÷ 230 V AC - 30 ÷ 110 V DC	-	250 mA	10 VA / 8 W	Against polarity reversing	5 m
CSH-221-2EX	Reed	2 wires	30 ÷ 230 V AC - 30 ÷ 110 V DC	-	250 mA	10 VA / 8 W	Against polarity reversing	2 m
CSH-221-5EX	Reed	2 wires	30 ÷ 230 V AC - 30 ÷ 110 V DC	-	250 mA	10 VA / 8 W	Against polarity reversing	5 m
CSH-233-2	Reed	3 wires	10 ÷ 30 V AC/DC	PNP	250 mA	10 VA / 8 W	Against polarity reversing	2 m

Magnetic proximity switches wtih M8 3-pin connector for H-slot

Note for 2-wire switch Mod. CSH-253:
in case of polarity reversing the sensor will still be operating, but LED diode won't turn on.

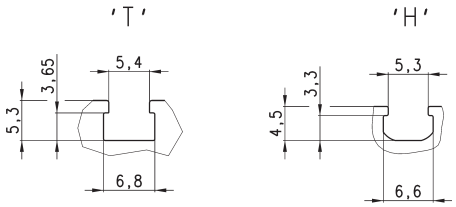

Suitable also for T-slots
Cable length: 0.3 m

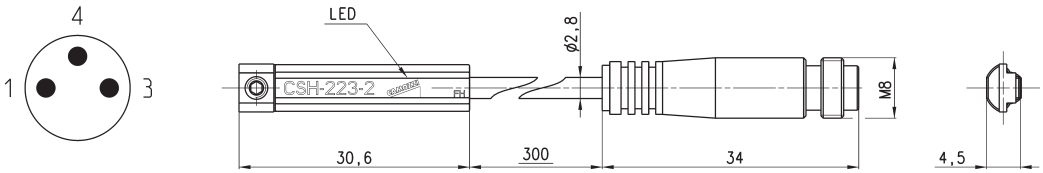

Mod.	Operation	Connection	Voltage	Output	Max current	Max load	Protection
CSH-253	Reed NO	2 wires M8 male 3 pin	10 ÷ 30 V AC/DC	-	250 mA	10 VA / 8 W	Against polarity reversing
CSH-253EX	Reed NO	2 wires M8 male 3 pin	10 ÷ 30 V AC/DC	-	250 mA	10 VA / 8 W	Against polarity reversing
CSH-263	Reed NO	3 wires M8 male 3 pin	10 ÷ 30 V AC/DC	PNP	250 mA	10 VA / 8 W	Against polarity reversing
CSH-263EX	Reed NO	3 wires M8 male 3 pin	10 ÷ 30 V AC/DC	PNP	250 mA	10 VA / 8 W	Against polarity reversing
CSH-364	Magnetoresistive	3 wires M8 male 3 pin	10 ÷ 27 V DC	PNP	250 mA	6 W	Against polarity reversing and overvoltage
CSH-364EX	Magnetoresistive	3 wires M8 male 3 pin	10 ÷ 27 V DC	PNP	250 mA	6 W	Against polarity reversing and overvoltage
CSH-463	Reed NC	3 wires M8 male 3 pin	10 ÷ 30 V AC/DC	PNP	250 mA	10 VA / 8 W	Against polarity reversing
CSH-463EX	Reed NC	3 wires M8 male 3 pin	10 ÷ 30 V AC/DC	PNP	250 mA	10 VA / 8 W	Against polarity reversing

Magnetic proximity switch with 2-wire cable for B-slot

In case of polarity reversing the sensor will still be operating, but the LED diode won't turn on.

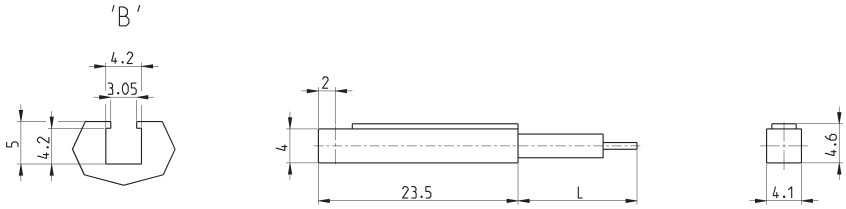

A = fixing screw
B = Led indicator
C = ideal position detection

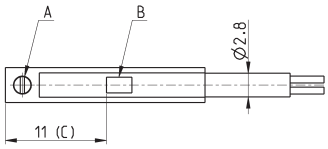

Mod.	Operation	Connections	Voltage	Output	Max. current	Max Load	Protection	L = length cable
CSB-D-220	Reed	2 wires	10÷110 V AC/DC	PNP	50 mA	8 W / 10 VA	Against polarity reversing and overvoltage	2 m

Magnetic proximity switch with 2-wire 90° cable for B-slot

In case of polarity reversing the sensor will still be operating, but the LED diode won't turn on.

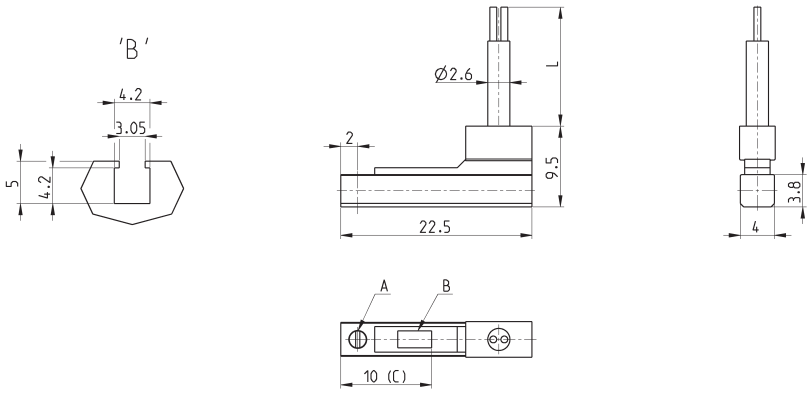

A = fixing screw
B = Led indicator
C = ideal position detection

Mod.	Operation	Connections	Voltage	Output	Max. current	Max Load	Protection	L = length cable
CSB-H-220	Reed	2 wires	10÷110 V AC/DC	PNP	50 mA	8 W / 10 VA	Against polarity reversing and overvoltage	2 m

Magnetic proximity switch with 2-wire cable for C-slot

In case of polarity reversing the sensor will still be operating, but the LED diode won't turn on.

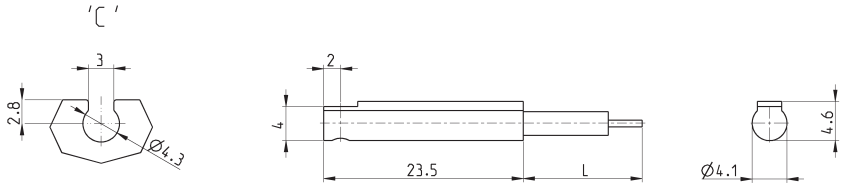

A = fixing screw
B = Led indicator
C = ideal position detection

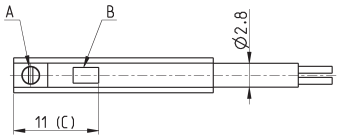

Mod.	Operation	Connections	Voltage	Output	Max. current	Max Load	Protection	L = length cable
CSC-D-220	Reed	2 wires	10÷110 V AC/DC	PNP	50 mA	8 W / 10 VA	Against polarity reversing and overvoltage	2 m

Magnetic proximity switch with 2-wire 90° cable for C-slot

In case of polarity reversing the sensor will still be operating, but the LED diode won't turn on.

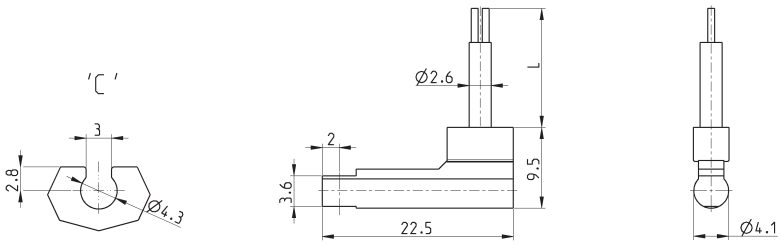

A = fixing screw
B = Led indicator
C = ideal position detection

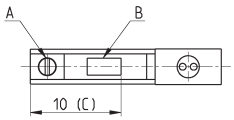

Mod.	Operation	Connections	Voltage	Output	Max. current	Max Load	Protection	L = length cable
CSC-H-220	Reed	2 wires	10÷110 V AC/DC	PNP	50 mA	8 W / 10 VA	Against polarity reversing and overvoltage	2 m

Magnetic proximity switches, 3-wire cable, D-slot

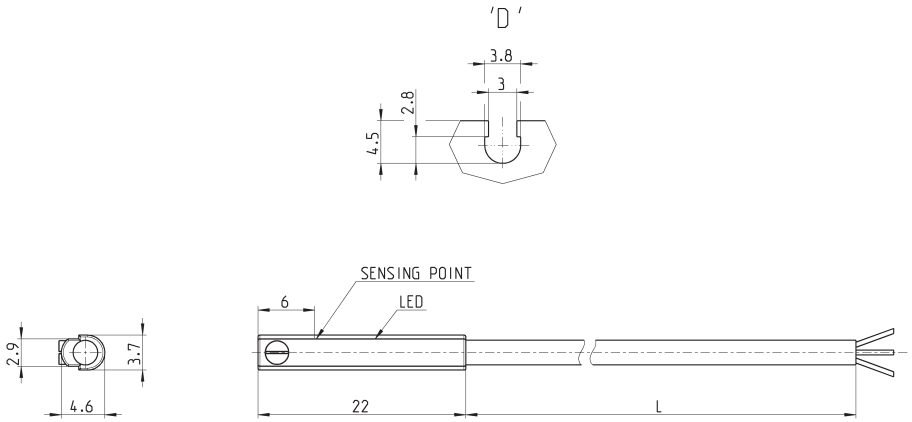

Mod.	Operation	Connections	Voltage	Output	Max. current	Max Load	Protection	L = length cable
CSD-D-334	Magnetoresistive	3 wires	10 ÷ 27 V DC	PNP	200 mA	6W	Against polarity reversing and overvoltage	2 m
CSD-D-334-5	Magnetoresistive	3 wires	10 ÷ 27 V DC	PNP	200 mA	6W	Against polarity reversing and overvoltage	5 m

Magnetic proximity switches, 3-wire cable, D-slot with 90° cable

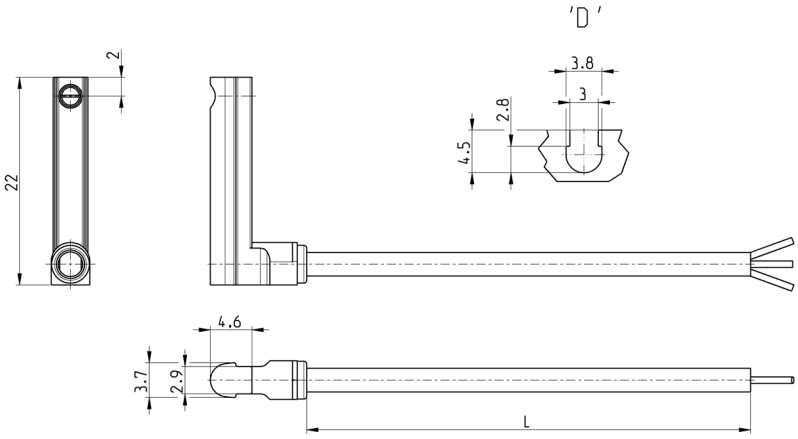

Mod.	Operation	Connections	Voltage	Output	Max. current	Max Load	Protection	L = length cable
CSD-H-334	Magnetoresistive	3 wires	10 ÷ 27 V DC	PNP	200 mA	6 W	Against polarity reversing and overvoltage	2 m
CSD-H-334-5	Magnetoresistive	3 wires	10 ÷ 27 V DC	PNP	200 mA	6 W	Against polarity reversing and overvoltage	5 m

Magnetic proximity switches, male M8 3-pin conn., D-slot, straight

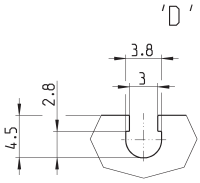

Cable length: 0.3 m

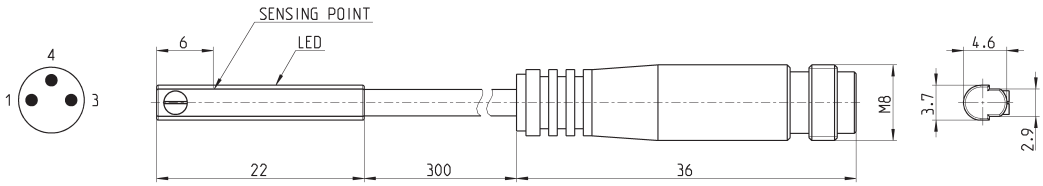

Mod.	Operation	Connection	Voltage	Output	Max current	Max load	Protection
CSD-D-364	Magnetoresistive	3 wires with M8 connector	10 ÷ 27 V DC	PNP	200 mA	6 W	Against polarity reversing and overvoltage

Magnetic proximity switches, male M8 3-pin conn., D-slot, 90°

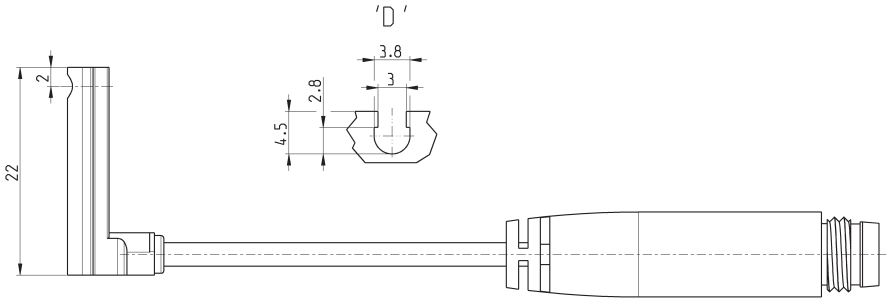

Cable length: 0.3 m

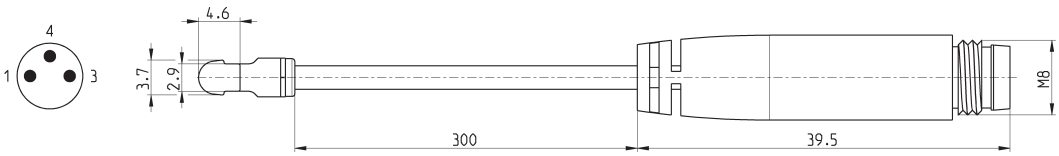

Mod.	Operation	Connection	Voltage	Output	Max current	Max load	Protection
CSD-H-364	Magnetoresistive	3 wires with M8 connector	10 ÷ 27 V DC	PNP	200 mA	6 W	Against polarity reversing and overvoltage

Magnetic proximity switches, ATEX "II 3 GD" certified, T-slot, straight

New

Note for 2-wire switches Mod. CSG-223-2-EX, CSG-223-5-EX, CSG-324-2-EX, CSG-324-5-EX:
in case of polarity reversing the sensor will still be operating, but the LED diode won't turn on.

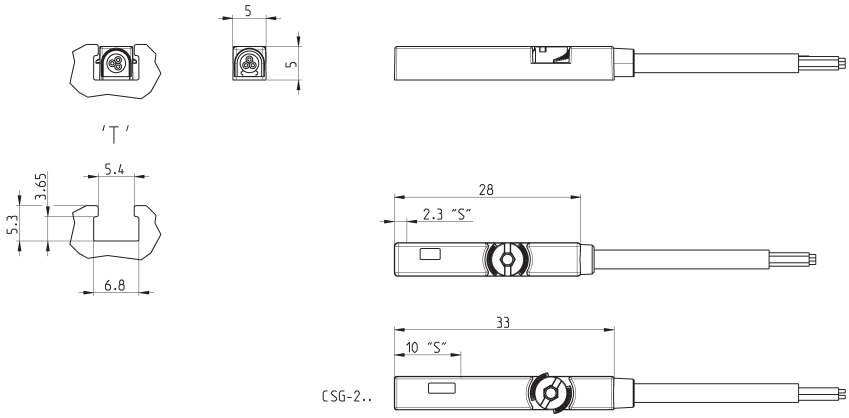

Top mounting with the new fixing system

Mod.	Operation	Connection	Voltage	Output	Max current	Max load	Protection	L = cable length (m)	LED colour
CSG-223-2-EX	Reed NO	2 wires	5 ÷ 30 V AC/DC	-	100 mA	3 W	IP67	2	Red
CSG-223-5-EX	Reed NO	2 wires	5 ÷ 30 V AC/DC	-	100 mA	3 W	IP67	5	Red
CSG-233-2-EX	Reed NO	3 wires	10 ÷ 30 V AC/DC	-	500 mA	10 W	IP67	2	Yellow
CSG-233-5-EX	Reed NO	3 wires	10 ÷ 30 V AC/DC	-	500 mA	10 W	IP67	5	Yellow
CSG-324-2-EX	Magnetoresistive NO	2 wires	10 ÷ 28 V DC	-	50 mA	1.5 W	IP67	2	Red
CSG-324-5-EX	Magnetoresistive NO	2 wires	10 ÷ 28 V DC	-	50 mA	1.5 W	IP67	5	Red
CSG-334-2-EX	Magnetoresistive NO	3 wires	10 ÷ 28 V DC	PNP	200 mA	5.5 W	IP67	2	Yellow
CSG-334-5-EX	Magnetoresistive NO	3 wires	10 ÷ 28 V DC	PNP	200 mA	5.5 W	IP67	5	Yellow
CSG-534-2-EX	Magnetoresistive NO	3 wires	10 ÷ 28 V DC	NPN	200 mA	5.5 W	IP67	2	Red
CSG-534-5-EX	Magnetoresistive NO	3 wires	10 ÷ 28 V DC	NPN	200 mA	5.5 W	IP67	5	Red
CSG-734-2-EX	Magnetoresistive NC	3 wires	10 ÷ 28 V DC	NPN	200 mA	5.5 W	IP67	2	Red
CSG-734-5-EX	Magnetoresistive NC	3 wires	10 ÷ 28 V DC	NPN	200 mA	5.5 W	IP67	5	Red
CSG-634-2-EX	Magnetoresistive NC	3 wires	10 ÷ 28 V DC	PNP	200 mA	5.5 W	IP67	2	Yellow
CSG-634-5-EX	Magnetoresistive NC	3 wires	10 ÷ 28 V DC	PNP	200 mA	5.5 W	IP67	5	Yellow

Magnetic proximity switches, UL certified, T-slot, straight

New

Note for 2-wire switches Mod. CSG-223-2-UL, CSG-223-5-UL, CSG-324-2-UL, CSG-324-5-UL:
in case of polarity reversing the sensor will still be operating, but the LED diode won't turn on.

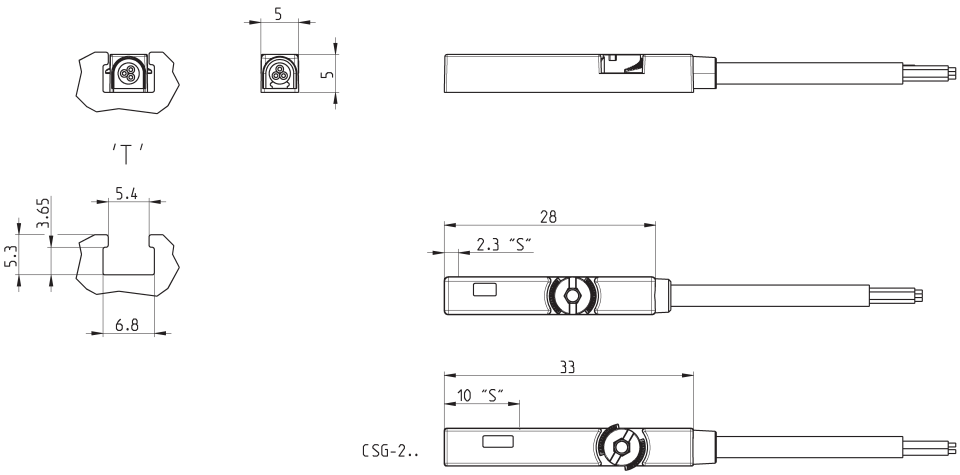

Top mounting with the new fixing system

Mod.	Operation	Connection	Voltage	Output	Max current	Max load	Protection	L = cable length (m)	LED colour
CSG-223-2-UL	Reed	2 wires	5 ÷ 30 V AC/DC	-	60 mA	1.8 W	IP67	2	Red
CSG-223-5-UL	Reed	2 wires	5 ÷ 30 V AC/DC	-	60 mA	1.8 W	IP67	5	Red
CSG-223-10-UL	Reed	2 wires	5 ÷ 30 V AC/DC	-	60 mA	1.8 W	IP67	10	Red
CSG-233-2-UL	Reed	3 wires	10 ÷ 30 V AC/DC	-	100 mA	3 W	IP67	2	Yellow
CSG-233-5-UL	Reed	3 wires	10 ÷ 30 V AC/DC	-	100 mA	3 W	IP67	5	Yellow
CSG-233-10-UL	Reed	3 wires	10 ÷ 30 V AC/DC	-	100 mA	3 W	IP67	5	Yellow
CSG-324-2-UL	Magnetoresistive	2 wires	10 ÷ 28 V DC	-	40 mA	1.2 W	IP67	2	Red
CSG-324-5-UL	Magnetoresistive	2 wires	10 ÷ 28 V DC	-	40 mA	1.2 W	IP67	5	Red
CSG-334-2-UL	Magnetoresistive	3 wires	10 ÷ 28 V DC	PNP	100 mA	3 W	IP67	2	Yellow
CSG-334-5-UL	Magnetoresistive	3 wires	10 ÷ 28 V DC	PNP	100 mA	3 W	IP67	5	Yellow
CSG-534-2-UL	Magnetoresistive	3 wires	10 ÷ 28 V DC	NPN	100 mA	3 W	IP67	2	Red

Load curves of sensors Mod. CSH, CST, CSV

CSH-223, CSH-253, CSH-233, CSH-263, CSH-463

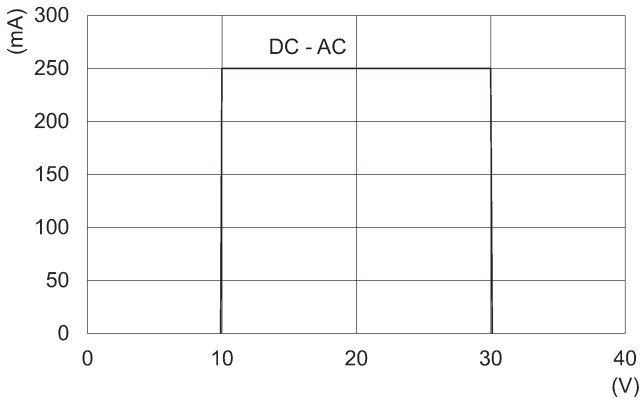

CSH-334, CSH-364

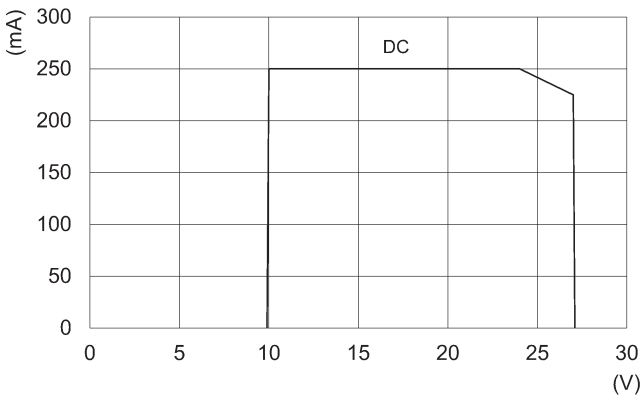

CST-250N, CSV-250N

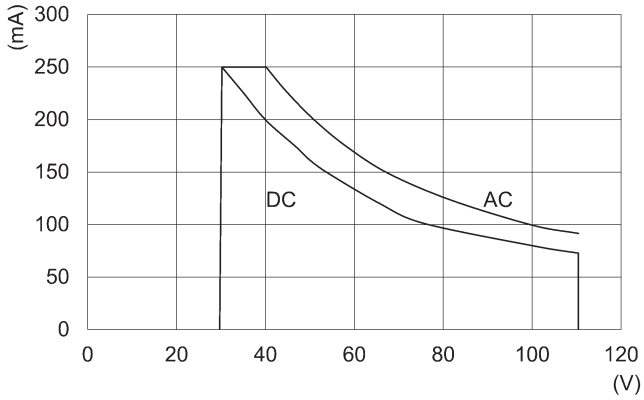

CST-232, CSV-232, CST-262, CSV-262

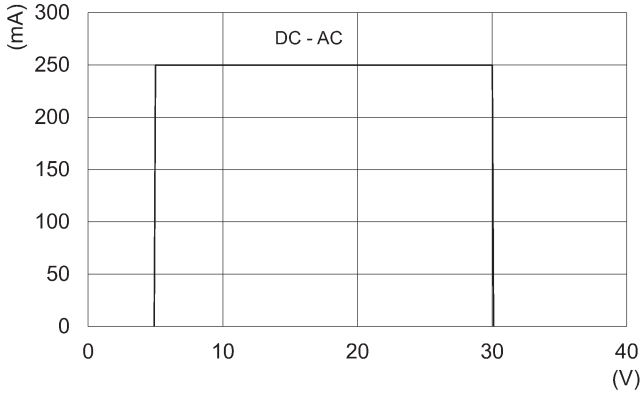

CST-332, CSV-332, CST-362, CSV-362, CST-532, CSV-562

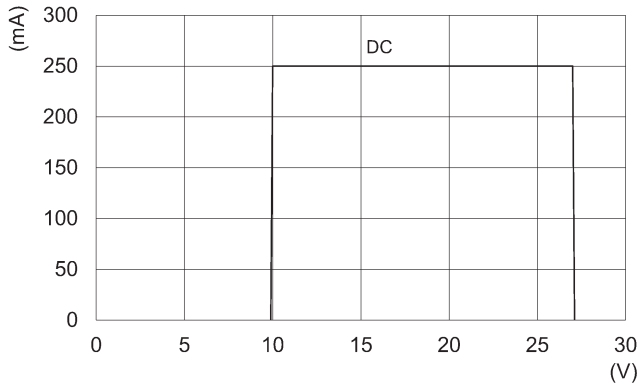

CSH-221, CST-220, CSV-220

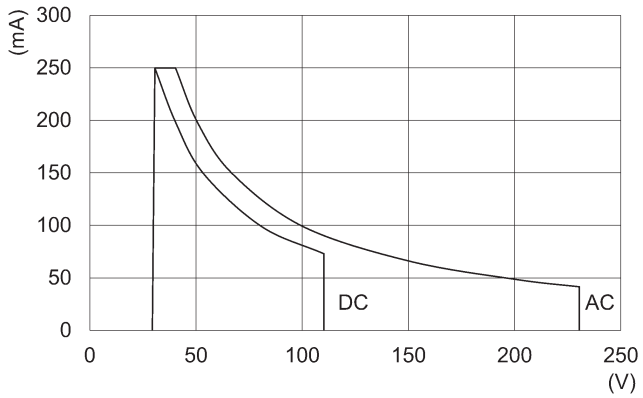

Load curves of sensors Mod. CSB, CSC, CSD, CSG

CSB-D-220, CSB-H-220, CSC-D-220, CSC-H-220

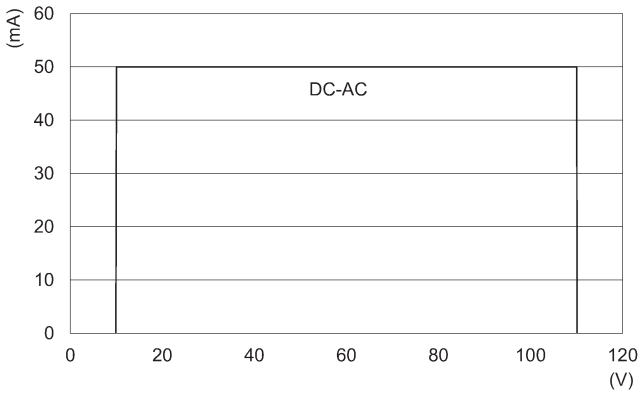

CSD-D-334, CSD-H-334, CSD-D-364, CSD-H-364

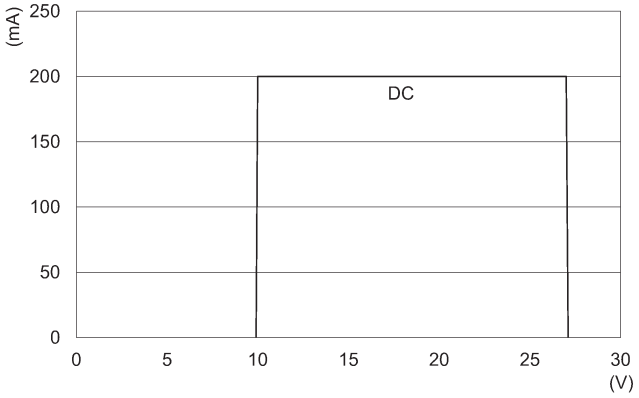

CSG-223-UL

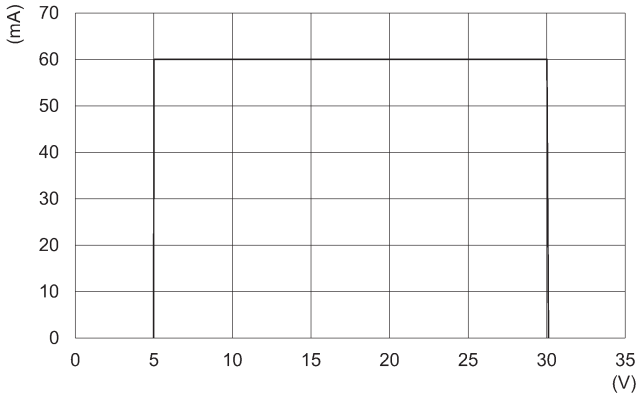

CSG-324-UL

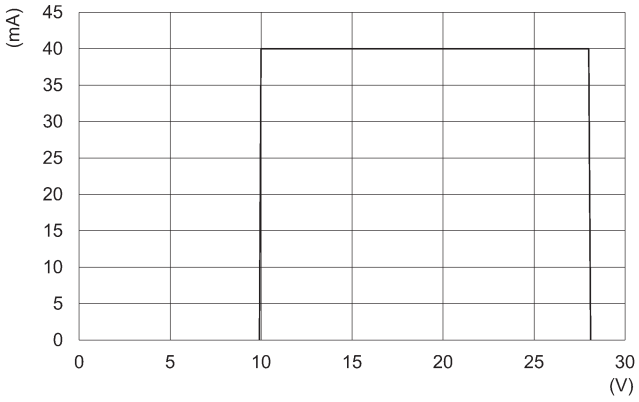

CSG-334-UL, CSG-534-UL

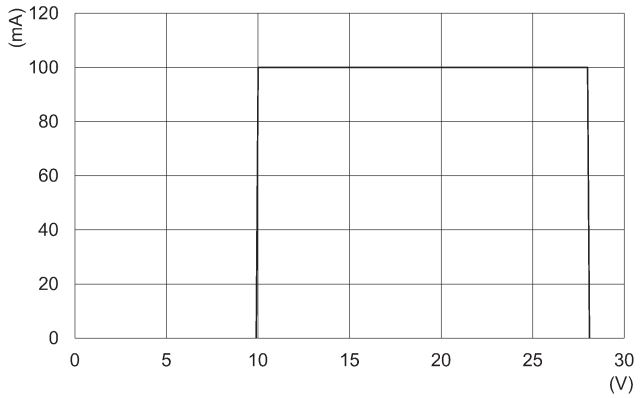

CSG-233-UL

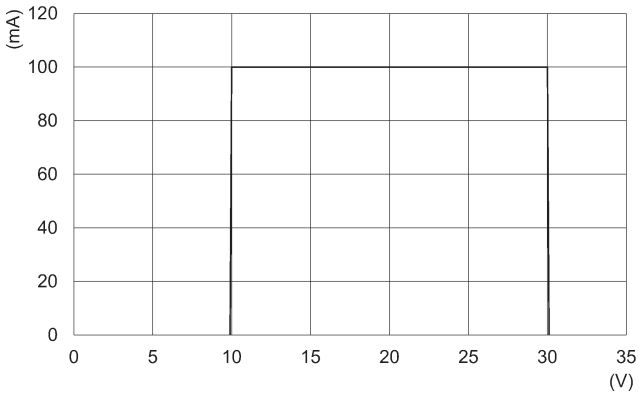

Load curves of sensors Mod. CSG

CSG-223-EX

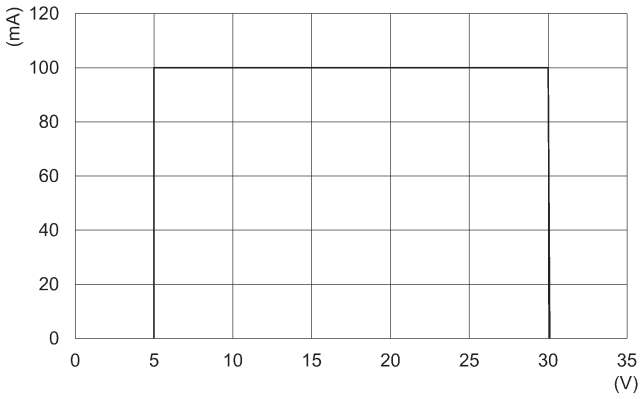

CSG-324-EX

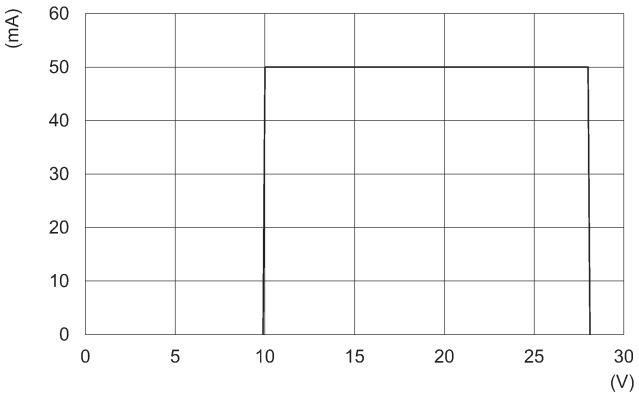

CSG-334-EX, CSG-534-EX, CSG-634-EX, CSG-734-EX

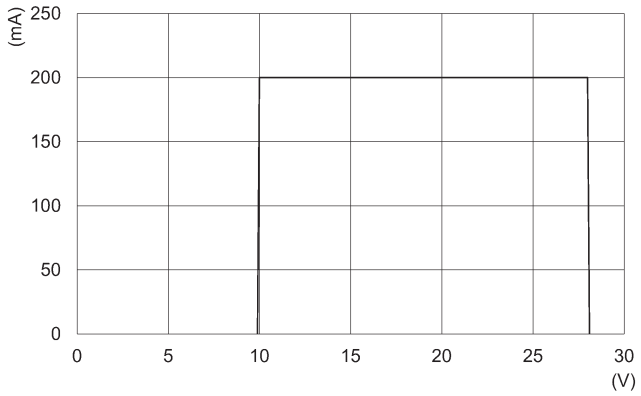

CSG-233-EX

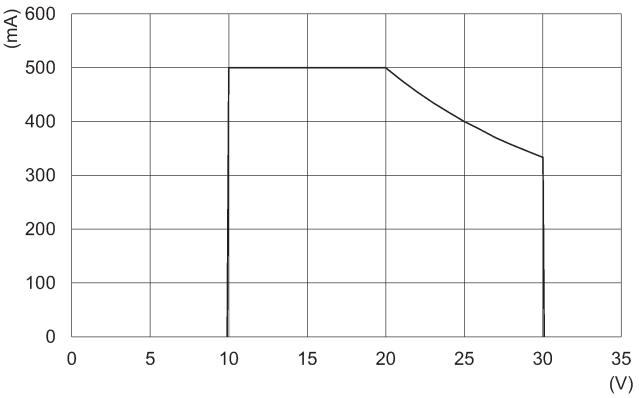

Electric circuit with protection against voltage spikes

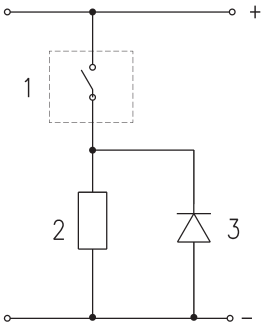

DC applications: there is no protection on the Reed sensors on the inductive load, therefore it is advisable to use an electric ciruit with protection against the voltage spikes.
See picture above for a typical example.
Legend:
1 = Sensor
2 = Load
3 = Protection diode

Electric circuit with protection against voltage spikes

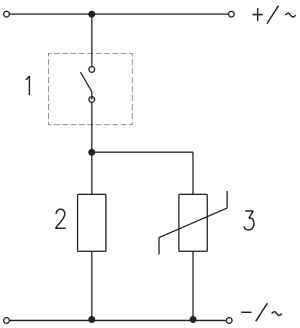

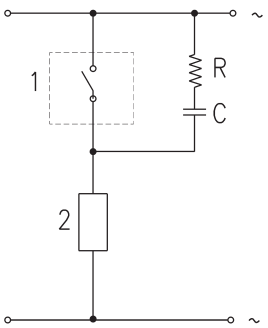

DC and AC applications: there is no protection on the Reed sensors on the inductive load, therefore it is advisable to use an electric ciruit with protection against the voltage spikes.
See picture above for a typical example.
Legend:
1 = Sensor
2 = Load
3 = Protection varistor

AC applications: there is no protection on the Reed sensors on the inductive load, therefore it is advisable to use an electric circuit with protection against the voltage spikes.
See picture above for a typical example.
Legend:
1 = Sensor
2 = Load
C + R = Series of resistor and protection capacitor

Mounting of Series CST - CSH - CSG sensors

CST/CSH/CSG sensors can be directly mounted on cylinders:
Series 31, 31R, 32, 32R
Series 52
Series 61
Series 63 (CSH and CSG only)
Series 69
Series 6PF
Series QC, QCBF, QCTF

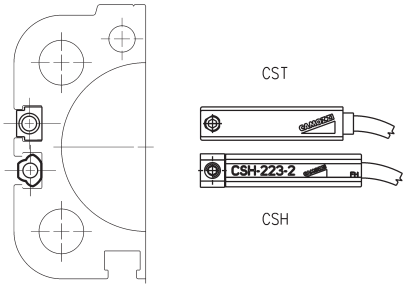

Mounting of Series CSV sensors

CSV sensors must be assembled directly into the groove of cylinders:
Series 50 ø 16÷25
Series QP - QPR ø 12÷16

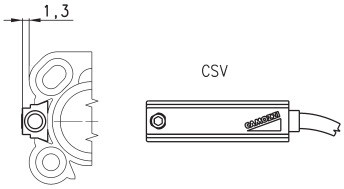

3-wire extension with M8 3-pin female connector

With PU sheathing, non shielded cable.
Protection class: IP65

1 BN = Brown
4 BK = Black
3 BU = Blue

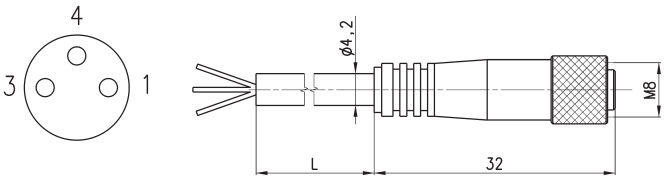

In case 2-wire sensors with M8 connector (Mod. CST-250N, CSV-250N, CSH-253) are used, please connect the brown wire to the supply (+) and the black wire to the load.

Mod.	L = cable length (m)
CS-2	2
CS-5	5
CS-10	10

3-wire extension with M8 3-pin male / female connector

Non shielded

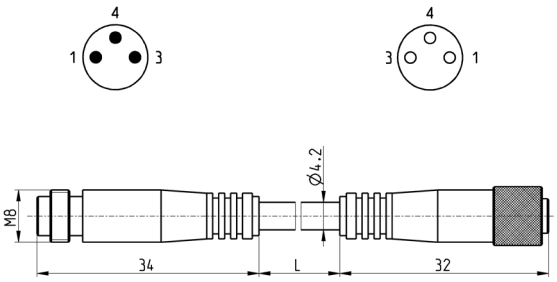

Mod.	cable length "L" (m)
CS-DW03HB-C250	2,5
CS-DW03HB-C500	5

Adapters Mod. S-CST-01 for Series CST-CSH-CSG sensors, V-slot

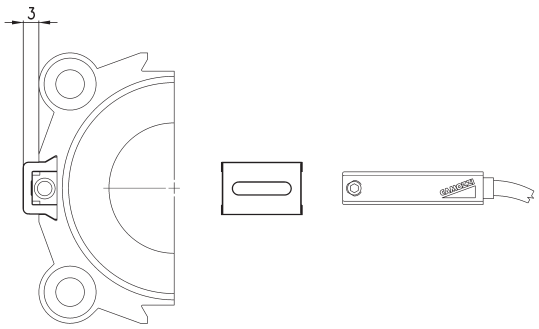

Mod.	Series QP-QPR cylinders	Series 50 cylinders
S-CST-01	Ø 20 ÷ 100	Ø 32 ÷ 80

Adapters Mod. S-CST-02..21 for Series CST-CSH-CSG sensors

Materials:
- stainless steel and technopolymer (S-CST-05÷12)*
- technopolymer (S-CST-02÷04)
- technopolymer (S-CST-18÷21)

* Not suitable for use with Series CSG sensors

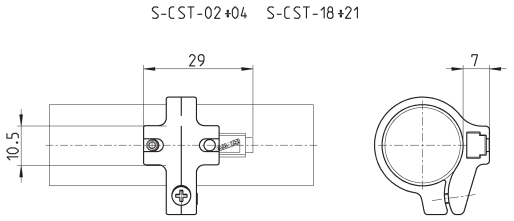

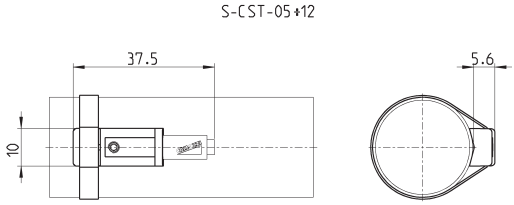

Mod.	Cylinders Series	Ø
S-CST-02	24, 25, 27	16
S-CST-03	24, 25, 27	20
S-CST-04	24, 25, 27	25
S-CST-05	94, 95	16-20-25 (94), 16-20 (95)
S-CST-06	90, 97, 95	32 (90-97), 25 (95)
S-CST-07	90, 97	40
S-CST-08	90, 97	50
S-CST-09	90, 97	63
S-CST-10	90	80
S-CST-11	90	100
S-CST-12	90	125
S-CST-18	27, 42	32
S-CST-19	27, 42	40
S-CST-20	27, 42	50
S-CST-21	27, 42	63
S-CST-16	63	32

Adapters Mod. S-CST-25..28 for Series CST-CSH-CSG sensors

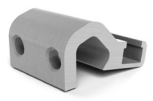

Material: anodized aluminium

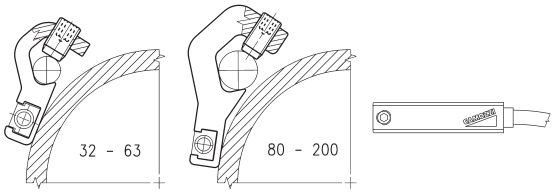

Mod.	Cylinders Series	Ø
S-CST-25	90, 63MT	32 ÷ 63
S-CST-26	90, 63MT	80 ÷ 100
S-CST-27	90, 63MT	125
S-CST-28	40	160 - 200

Adapters for Series CST-CSH-CSG sensors

For Series 63MT cylinders mounted with guides 45NHT or 45NHB.
S-CST-45N1 is not suitable for use with Series CSG sensors.

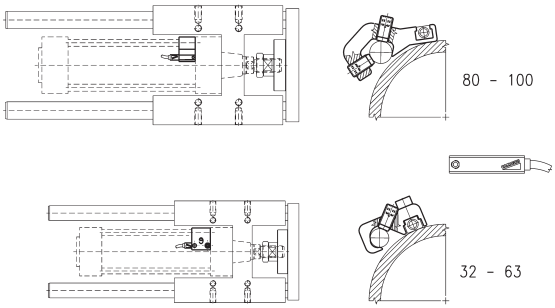

Mod.	Cylinders Series	Ø
S-CST-45N1	90, 63MT	32 ÷ 63
S-CST-45N2	90, 63MT	80 ÷ 100

Slot cover profile suitable for actuators with T- and H-slot

Supplied with 500 mm tube

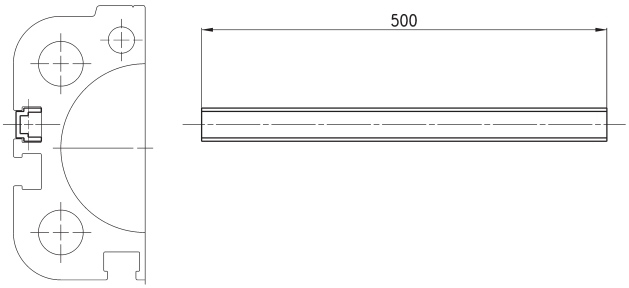

Mod.	Series of cylinders
S-CST-500	31, 31 Tandem and Multi-position, QCT, QCB, QCBT, QCBF, 61, 63MP, 6E, 5E, 69, 32, 32 Tandem and Multi-position

Series CSN proximity switches

Reed switch

The electrical proximity switch Mod. CSN 2032-0 consists of a Reed switch complete with an electronic protection circuit and a red LED indicator.
The resin inside the casing ensures high protection and insulation.

It is designed so that it can be fixed directly on the tie-rod by means of two screws which assure the position longitudinal to the cylinder axle; and with a third screw for the anti-rotation positioning. The three terminals are indicated by the numbers 1, 2 and 3 and enable the following connections to be made (see the scheme).

GENERAL DATA

Mod.	CSN 2032-0
Voltage	from 12 to 220V AC and DC
Protection	IP54 / IP65 with connector DIN 43650
Material	glass-reinforced PA
Mounting	bracket for tie rod ø 6 ÷ ø 10
Signalling	integrated red LED
Electrical connection	DIN 43650 connector, Mod. 122-800
Max. current	1.5 A
Max. load	20 W DC - 30 VA AC
Actuating time	≤ 2 ms
Actuating tolerance	± 1mm
Operating temperature	- 25°C ÷ + 75°C
Type of contact	NO (normally open)

TECHNICAL DATA

CONNECTION
- For inductive loads = solenoid valves, electrical magnets, relay.
To connectors = terminals 1 - 2
- For capacitive loads = circuit with remaining tension (see PLC controls)
To connectors = 1 - 3

Note: For connections with wires of approximately 10m, the connection shall be made as for a capacitive load.

MAXIMUM LOADS
For maximum loads see relative diagram, those loads are valid only for inductive loads. For capacitive loads, using clamp 3 (or black wire) load must not exceed 80 mA and load must be given by PLC or, for electrical circuits, by microrelay or micro solenoid valves with 2W maximum consumption.

Note: When operating with direct current, clamp 1 must always be connected to the positive outlet (+). In cases where commands are given from the PLC and logic NPN, clamp 1 must be connected to the inlet. In cases where commands are given from the PLC and logic PNP, clamps 2 or 3 must be connected to the inlet.

LEGEND:
C1 = capacitive load
C2 = inductive load

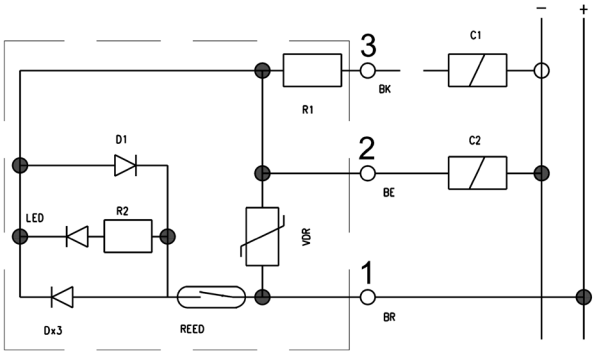

Maximum contact load

The maximum load (W) which the contacts are able to tolerate is that indicated in the section "General data", i.e.
- 20 W for direct current (DC)
- 30 VA for alternating current (AC)
The effective load allowed depends on the operating voltage (minimum 12 V, maximum 220 V) as shown in the following graph.

Note: this graph was obtained from practical tests performed using a load consisting of our Series A and 6 solenoid valves, at an operating speed of one stroke per second.
For higher operating speeds, your are advised to contact our technical department.

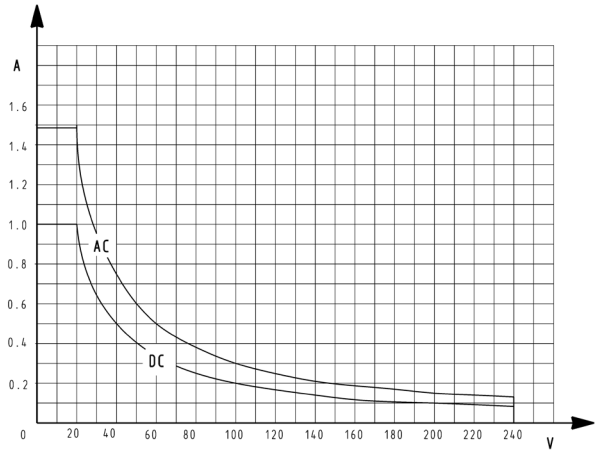

Switches Series CSN

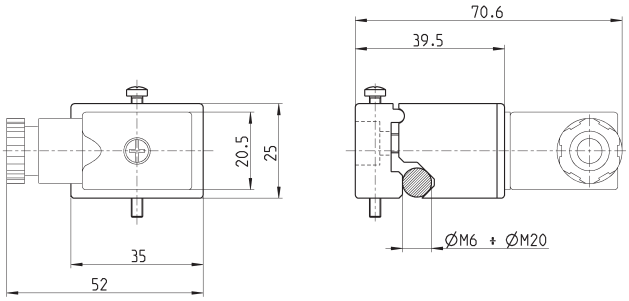

Mod.	for cylinders Series 40 - ø 160 ÷ 200	for cylinders Series 40 - ø 250 ÷ 320	for cylinders Series 41 - ø 160 ÷ 200
CSN 2032-0	mounting band to be ordered separately	direct mounting	mounting band to be ordered separately

Mounting bracket for sensor

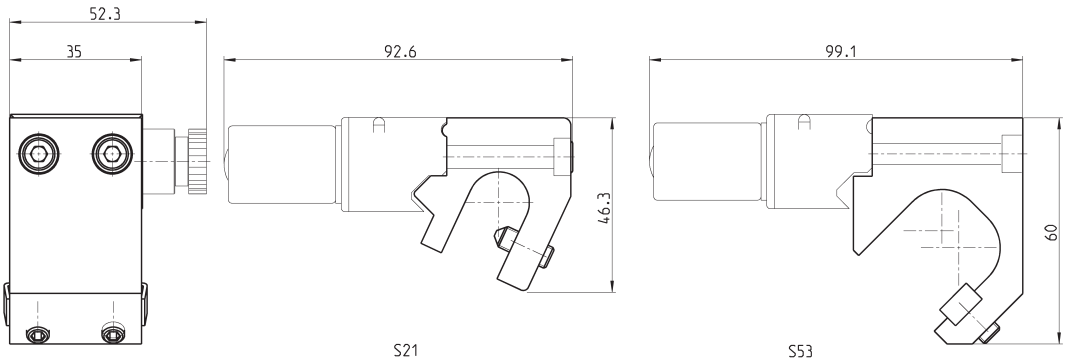

Mod.	
S21	for cylinders Series 40 ø 160 and 200
S53	for cylinders Series 41 ø 160 and 200

Table 1: mounting of sensors on cylinders

Series	Ø	CST - CSH	CSV	CSN
24 - 25	16	S-CST-02		
	20	S-CST-03		
	25	S-CST-04		
27	20	S-CST-03		
	25	S-CST-04		
	32	S-CST-18		
	40	S-CST-19		
	50	S-CST-20		
	63	S-CST-21		
31	12	Direct mounting		
	16	Direct mounting		
	20	Direct mounting		
	25	Direct mounting		
	32	Direct mounting		
	40	Direct mounting		
	50	Direct mounting		
	63	Direct mounting		
	80	Direct mounting		
	100	Direct mounting		
32	20	Direct mounting		
	25	Direct mounting		
	32	Direct mounting		
	40	Direct mounting		
	50	Direct mounting		
	63	Direct mounting		
	80	Direct mounting		
	100	Direct mounting		
40	160	S-CST-28		S21
	200	S-CST-28		S21
	250			Direct mounting
	320			Direct mounting
41	160			S53
	200			S53
42	32	S-CST-18		
	40	S-CST-19		
	50	S-CST-20		
	63	S-CST-21		
50	16		Direct mounting	
	25		Direct mounting	
	32	S-CST-01		
	40	S-CST-01		
	50	S-CST-01		
	63	S-CST-01		
	80	S-CST-01		
52	25	Direct mounting		
	32	Direct mounting		
	40	Direct mounting		
	50	Direct mounting		
	63	Direct mounting		
45N	32	S-CST-45N1		
	40	S-CST-45N1		
	50	S-CST-45N1		
	63	S-CST-45N1		
	80	S-CST-45N2		
	100	S-CST-45N2		

Table 2: mounting of sensors on cylinders

Series	Ø	CST - CSH
61	32	Direct mounting
	40	Direct mounting
	50	Direct mounting
	63	Direct mounting
	80	Direct mounting
	100	Direct mounting
63...P	32	Direct mounting (CSH only)
	40	Direct mounting (CSH only)
	50	Direct mounting (CSH only)
	63	Direct mounting (CSH only)
	80	Direct mounting (CSH only)
	100	Direct mounting (CSH only)
	125	Direct mounting (CSH only)
63...T	32	S-CST-25
	40	S-CST-25
	50	S-CST-25
	63	S-CST-25
	80	S-CST-26
	100	S-CST-26
	125	S-CST-27
69	32	Direct mounting
	40	Direct mounting
	50	Direct mounting
	63	Direct mounting
	80	Direct mounting
	100	Direct mounting
	125	Direct mounting
6PF	50	Direct mounting
	63	Direct mounting
	80	Direct mounting
	100	Direct mounting
	125	Direct mounting
90	32	S-CST-06
	40	S-CST-07
	50	S-CST-08
	63	S-CST-09
	80	S-CST-10
	100	S-CST-11
	125	S-CST-12
94	16	S-CST-05
	20	S-CST-05
	25	S-CST-05
95	16	S-CST-05
	20	S-CST-05
	25	S-CST-06
97	32	S-CST-06
	40	S-CST-07
	50	S-CST-08
	63	S-CST-09

Table 3: mounting of sensors on cylinders

Series	Ø	CST - CSH	CSV	CSC-D / CSC-H
QC	20	Direct mounting		
	25	Direct mounting		
	32	Direct mounting		
	40	Direct mounting		
	50	Direct mounting		
	63	Direct mounting		
QCBF	20	Direct mounting		
	25	Direct mounting		
	32	Direct mounting		
	40	Direct mounting		
QCTF	20	Direct mounting		
	25	Direct mounting		
	32	Direct mounting		
	40	Direct mounting		
QP - QPR	12		Direct mounting	
	16		Direct mounting	
	20	S-CST-01		
	25	S-CST-01		
	32	S-CST-01		
	40	S-CST-01		
	50	S-CST-01		
	63	S-CST-01		
	80	S-CST-01		
	100	S-CST-01		
QX	10			Direct mounting
	16			Direct mounting
	20			Direct mounting
	25			Direct mounting
	32			Direct mounting
ST	20	Direct mounting		
	32	Direct mounting		
	40	Direct mounting		
	50	Direct mounting		

Table 4: mounting of sensors on grippers, electromechanical axis/cylinders

* Further details about Series 5E electromechanical axis and Series 6E electromechanical cylinders can be found in the Electric actuation catalogue.

Series	Ø	CST - CSH	CSB-D / CSB-H	CSC-D / CSC-H	CSD-D / CSD-H
Grippers					
CGA	10		Direct mounting		
	16		Direct mounting		
	20		Direct mounting		
	25		Direct mounting		
	32		Direct mounting		
CGC	50		Direct mounting (CSB-D-220 only)		
	64		Direct mounting (CSB-D-220 only)		
	80		Direct mounting (CSB-D-220 only)		
	100		Direct mounting (CSB-D-220 only)		
	125		Direct mounting (CSB-D-220 only)		
CGLN	10			Direct mounting	
	16			Direct mounting	
	20			Direct mounting	
	25			Direct mounting	
	32			Direct mounting	
CGP	10		Direct mounting		
	16		Direct mounting		
	20		Direct mounting		
	25		Direct mounting		
	32		Direct mounting		
CGPS	10				Direct mounting
	16				Direct mounting
	20				Direct mounting
	25				Direct mounting
	32				Direct mounting
CGPT	16				Direct mounting
	20				Direct mounting
	25				Direct mounting
	32				Direct mounting
	40				Direct mounting
CGSN	16			Direct mounting	Direct mounting
	20			Direct mounting	Direct mounting
	25			Direct mounting	Direct mounting
	32			Direct mounting	Direct mounting
RPGB	8				Direct mounting
	12				Direct mounting
Electromechanical axis *					
5E	50	Direct mounting (CSH only)			
	65	Direct mounting (CSH only)			
	80	Direct mounting (CSH only)			
Electromechanical cylinders *					
6E	32	Direct mounting			
	40	Direct mounting			
	50	Direct mounting			
	63	Direct mounting			

Series 43 hydrochecks

Bore ø 40 mm
Regulated thrust or return stroke
Skip-Stop function

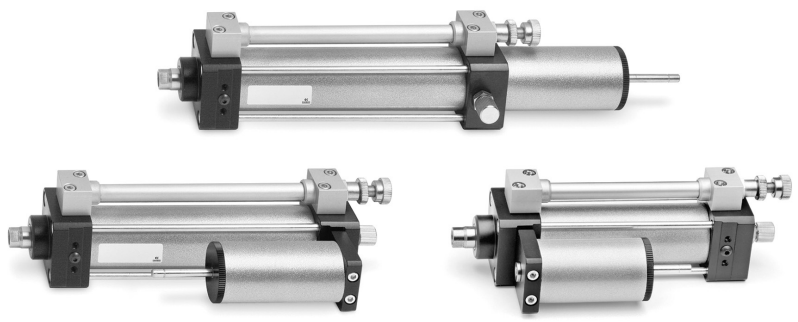

Series 43 hydrocheck units are available with two different types of control: regulated outward movement and fast return; or fast outward movement and regulated return. These hydrochecks come complete with an oil surge tank which ensures automatic equalisation.
Speed variation is obtained by means of an incorporated flow regulator designed to allow comprehensive and constant use.

Upon request, they can be supplied with an incorporated stop valve or an acceleration valve or both.
To restore oil when the minimum level in the surge tank is reached, use the following oil and pump Mod. 43N-PMP: hydraulic oil, class H, ISO symbol HG 46, viscosity 4.5 E. at 40°C.

GENERAL DATA

Type of construction	with tie-rods
Operation	regulation of the hydrocheck's rod return (thrust) regulation of the hydrocheck's rod thrust (traction)
Controllable load	max. 600 Kgf without valves, max 500 Kgf with valves (including inertia of moving masses)
Operating temperature	-10°C ÷ +60°C
Media	hydraulic oil, class H, ISO symbol HG 46, viscosity 4.5 E. at 40°C
Speed	70 - 10000 mm/min without valves, 0 - 6000 mm/min with valves
Standard stroke	50, 100, 150, 200 (special stroke available on request)
Special designs	with STOP or SKIP and SKIP/STOP valve *
SKIP/STOP valve operating pressure	4 ÷ 8 bar
Type of mounting	feet Mod. B-40 (see B-41-40 for dimensions)

* = minimum stroke 80mm

CODING EXAMPLE

43	N	-	P	S	0	-	40	-	200

43	SERIES
N	VERSION N = standard S = special
P	TANK POSITION L = tank in series P = tank parallel D = double valve, tank parallel
S	REGULATION S = thrust (hydrocheck's rod return regulated) T = traction (hydrocheck's rod thrust regulated)
0	OPERATION A = SKIP valve B = SKIP + STOP valve * V = STOP valve 0 = standard
40	BORE 40mm
200	STROKE in mm

* = minimum stroke 80mm

Hydrochecks Mod. 43N-LT0-40

+ = add the stroke

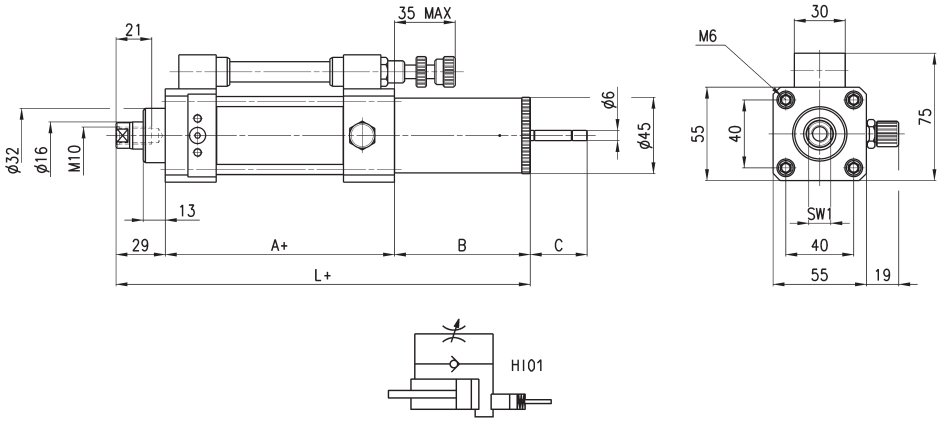

DIMENSIONS						
Mod.	Stroke (mm)	A+	B	C	L+	SW1
43N-LT0-40-050	50	85	80	32	194	13
43N-LT0-40-100	100	85	80	32	194	13
43N-LT0-40-150	150	85	100	47	214	13
43N-LT0-40-200	200	85	100	47	214	13

Hydrochecks Mod. 43N-LTA-40 and 43N-LTV-40

On request

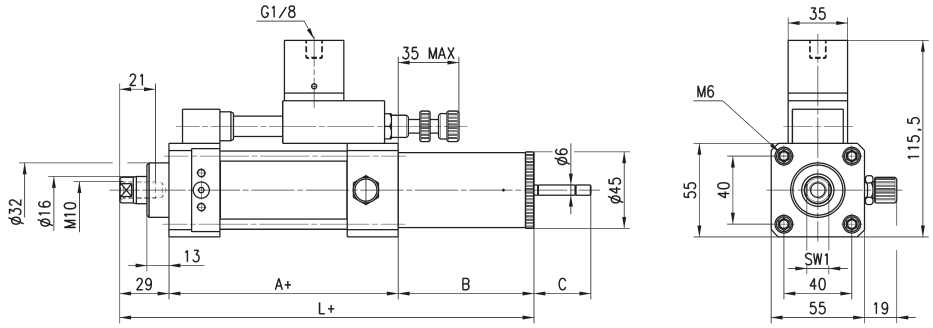

+ = add the stroke

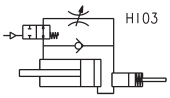

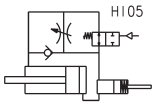

DIMENSIONS							
Mod.	Stroke (mm)	A+	B	C	L+	SW1	Pneumatic symbol
43N-LTA-40-050	50	85	80	32	194	13	HI05
43N-LTA-40-100	100	85	80	32	194	13	HI05
43N-LTA-40-150	150	85	100	47	214	13	HI05
43N-LTA-40-200	200	85	100	47	214	13	HI05
43N-LTV-40-050	50	85	80	32	194	13	HI03
43N-LTV-40-100	100	85	80	32	194	13	HI03
43N-LTV-40-150	150	85	100	47	214	13	HI03
43N-LTV-40-200	200	85	100	47	214	13	HI03

Hydrochecks Mod. 43N-LTB-40

On request

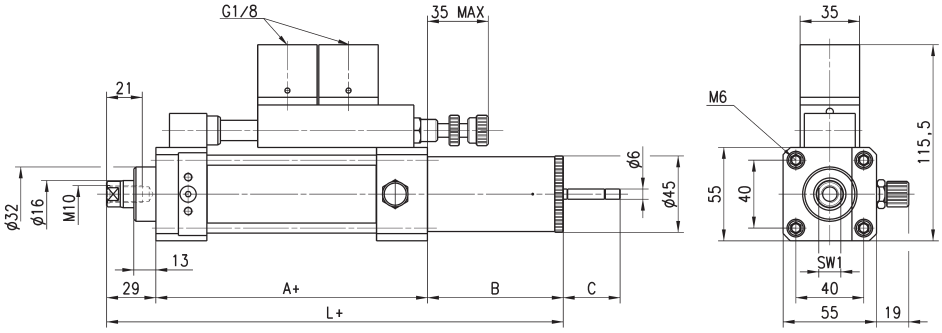

+ = add the stroke

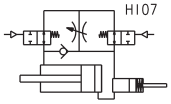

DIMENSIONS						
Mod.	Stroke (mm)	A+	B	C	L+	SW1
43N-LTB-40-050	50	85	80	32	194	13
43N-LTB-40-100	100	85	80	32	194	13
43N-LTB-40-150	150	85	100	47	214	13
43N-LTB-40-200	200	85	100	47	214	13

Hydrochecks Mod. 43N-PT0-40

On request

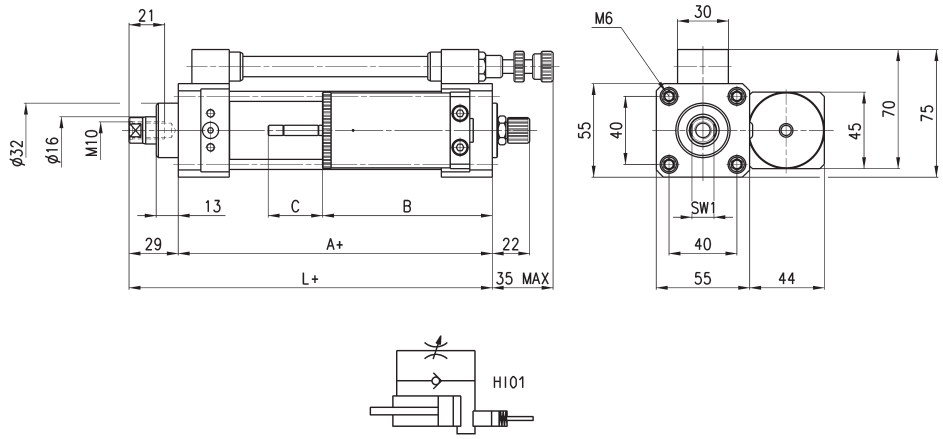

+ = add the stroke

DIMENSIONS						
Mod.	Stroke (mm)	A+	B	C	L+	SW1
43N-PT0-40-050	50	85	100	32	114	13
43N-PT0-40-100	100	85	105	32	114	13
43N-PT0-40-150	150	85	125	47	114	13
43N-PT0-40-200	200	85	125	47	114	13
43N-PT0-40-1000	1000	85				13

Hydrochecks Mod. 43N-PTA-40 and 43N-PTV-40

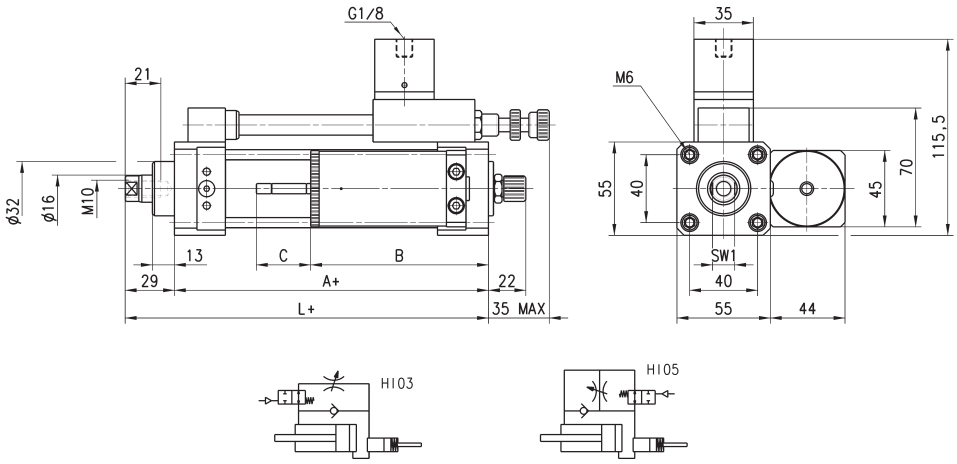

+ = add the stroke

DIMENSIONS							
Mod.	Stroke (mm)	A+	B	C	L+	SW1	Pneumatic symbol
43N-PTA-40-050	50	85	100	32	114	13	HI05
43N-PTA-40-100	100	85	105	32	114	13	HI05
43N-PTA-40-150	150	85	125	47	114	13	HI05
43N-PTA-40-200	200	85	125	47	114	13	HI05
43N-PTV-40-050	50	85	100	32	114	13	HI03
43N-PTV-40-100	100	85	105	32	114	13	HI03
43N-PTV-40-150	150	85	125	47	114	13	HI03
43N-PTV-40-200	200	85	125	47	114	13	HI03

Hydrochecks Mod. 43N-PTB-40

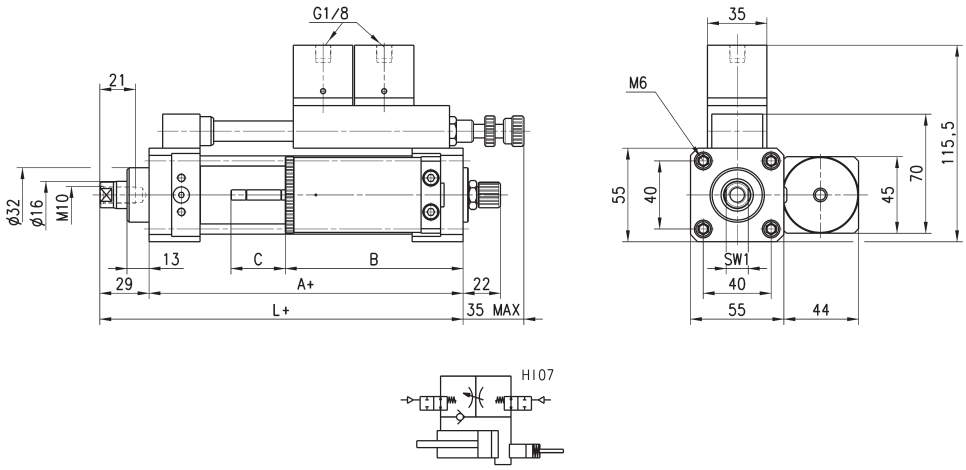

+ = add the stroke

DIMENSIONS						
Mod.	Stroke (mm)	A+	B	C	L+	SW1
43N-PTB-40-050	50	85	100	32	114	13
43N-PTB-40-100	100	85	105	32	114	13
43N-PTB-40-150	150	85	125	47	114	13
43N-PTB-40-200	200	85	125	47	114	13

Hydrochecks Mod. 43N-PS0-40

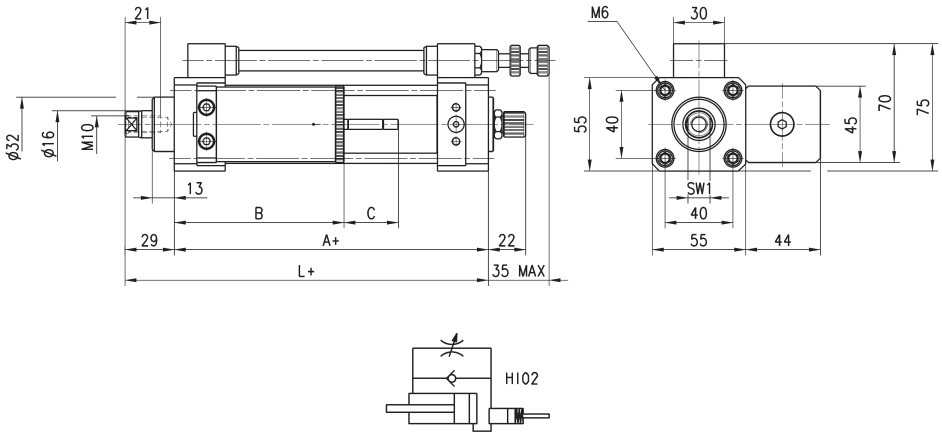

+ = add the stroke

DIMENSIONS						
Mod.	Stroke (mm)	A+	B	C	L+	SW1
43N-PS0-40-050	50	85	100	32	114	13
43N-PS0-40-100	100	85	105	32	114	13
43N-PS0-40-150	150	85	125	47	114	13
43N-PS0-40-200	200	85	125	47	114	13

Hydrochecks Mod. 43N-PSA-40 and 43N-PSV-40

On request

+ = add the stroke

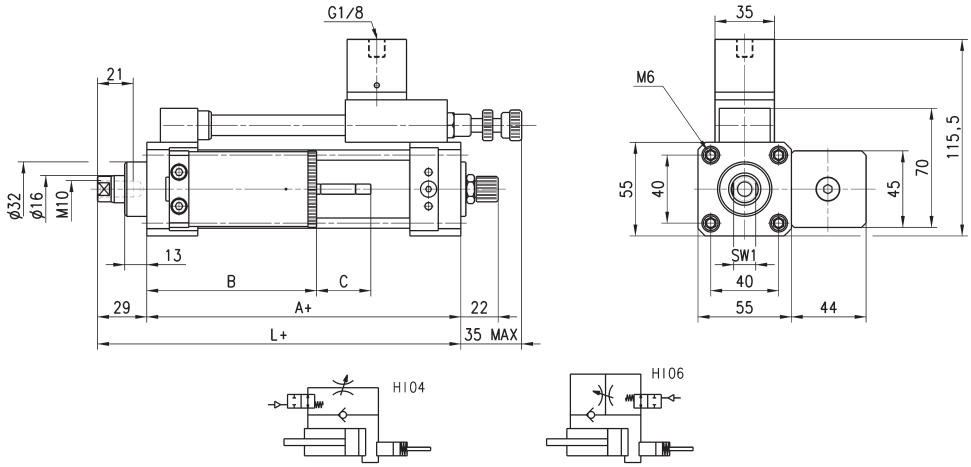

DIMENSIONS							
Mod.	Stroke (mm)	A+	B	C	L+	SW1	Pneumatic symbol
43N-PSA-40-050	50	85	100	32	114	13	HI06
43N-PSV-40-050	50	85	100	32	114	13	HI04
43N-PSA-40-100	100	85	105	32	114	13	HI06
43N-PSV-40-100	100	85	105	32	114	13	HI04
43N-PSA-40-150	150	85	125	47	114	13	HI06
43N-PSV-40-150	150	85	125	47	114	13	HI04
43N-PSA-40-200	200	85	125	47	114	13	HI06
43N-PSV-40-200	200	85	125	47	114	13	HI04

Hydrochecks Mod. 43N-PSB-40

+ = add the stroke

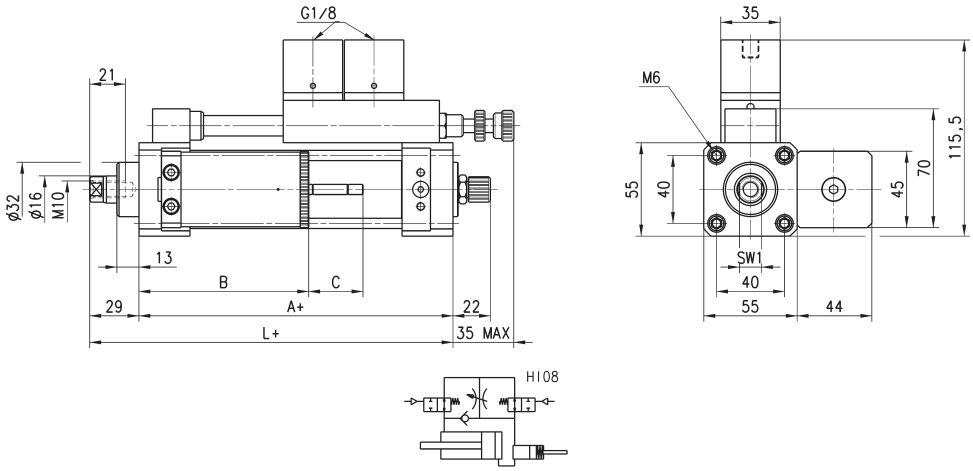

DIMENSIONS						
Mod.	Stroke (mm)	A+	B	C	L+	SW1
43N-PSB-40-100	100	85	105	32	114	13
43N-PSB-40-150	150	85	125	47	114	13
43N-PSB-40-200	200	85	125	47	114	13

Connecting kit Mod. 43N-40

Hydrocheck connecting kit to suit cylinders Ø 40 - 50 - 63 - 80 mm
Material: phosphated steel

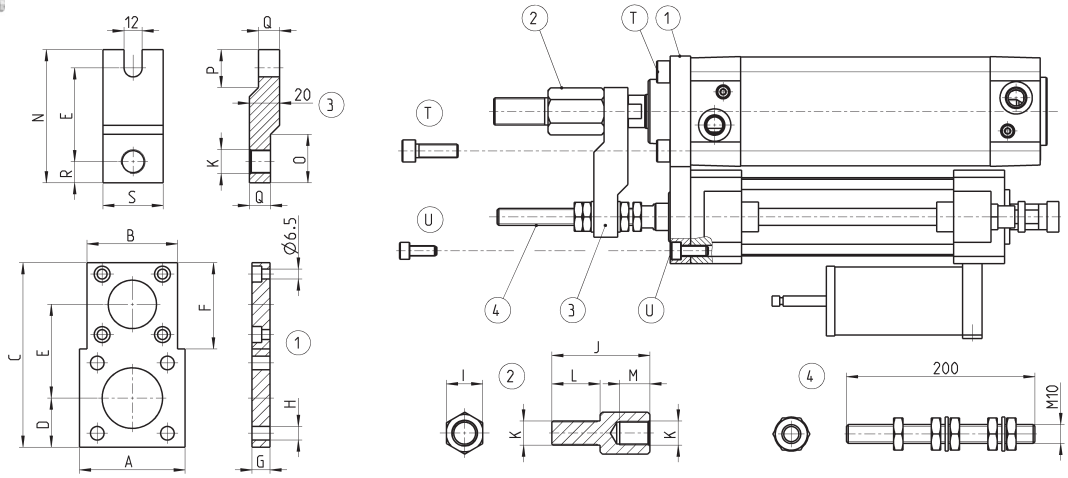

DIMENSIONS																					
Mod.	A	B	C	D	E	F	G	H	I	J	K	L	M	N	O	P	Q	R	S	T (x4)	U (x4)
43N-40-40	60	-	110	26.5	56	-	12	7	19	47	M12X1.25	24	14	80	25	25	14	12	40	M6x25	M6x16
43N-40-50	70	60	122	32.5	62	57	12	9	24	65	M16X1.5	32	20	88	32	25	14	14	40	M8x25	M6x16
43N-40-63	80	60	132	37.5	67	57	20	9	24	65	M16X1.5	32	20	93	32	25	14	14	40	M8x35	M6x25
43N-40-80	100	60	152	47.5	77	57	20	11	30	78	M20X1.5	40	25	107	-	-	-	18	50	M10x35	M6x25

Hydrocheck refilling pump Mod. 43N-PMP

Pump for refilling hydrocheck speed regulator

Mod.
43N-PMP

Series RL rod lock

For cylinders ISO 15552 and ISO 6432
ø 20, 25, 32, 40, 50, 63, 80, 100, 125 mm

- Compact design
- Functioning in both directions
- Blocks without pressure releases with pressure

Series RL rod locks are available in 9 different sizes (diameters: 20, 25, 32, 40, 50, 63, 80, 100 to 125 mm). The compact dimensions allow units to be fitted on cylinders where space is limited.
Rod lock units are often used to hold the load in position during Emergency Stop conditions or when the air supply may be accidently disconnected from the system.
The holding forces are measured at 8 bar and apply in both directions.

Caution!
The rod lock should not be used to "brake" the piston rod in dynamic conditions and must only be applied when movement has ceased.

Note:
the cylinder piston rod length must be increased when using a rod lock unit.
See the table for the minimum extension lengths for each diameter.

GENERAL DATA

Type of construction	compact
Operation	piston operated clamp
Materials	housing: anodized AL clamp: brass seals: NBR
Cylinder diameter	ø 20 - 25 - 32 - 40 - 50 - 63 - 80 - 100 - 125
Operating temperature	0°C ÷ 80°C (with dry air -20°C)
Configuration	pressure release
Operating pressure	3 ÷ 8 bar
Ports	M5 = ø20, 25, 32 - G1/8 = ø40, 50, 63, 80, 100, 125
Fluid	Filtered air without lubrication. If lubricated air is used, it is recommended to use ISOVG32 oil. Once applied the lubrication should never be interrupted.

CODING EXAMPLE

RLC	-	41	-	32

RLC	SERIES RLC = standard, complete with cartridge and housing RLB = cartridge only	
41	CYLINDER SERIES 24 = for Series 24 and 25 41 = for Series 61 and 63	PNEUMATIC SYMBOL RDLK
32	CYLINDER DIAMETER (mm) 20 = 20 mm 25 = 25 mm 32 = 32 mm 40 = 40 mm 50 = 50 mm 63 = 63 mm 80 = 80 mm 100 = 100 mm 125 = 125 mm	

PNEUMATIC SYMBOLS

The pneumatic symbols which have been indicated in the CODING EXAMPLE are shown below.

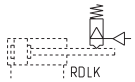

CONNECTION EXAMPLES

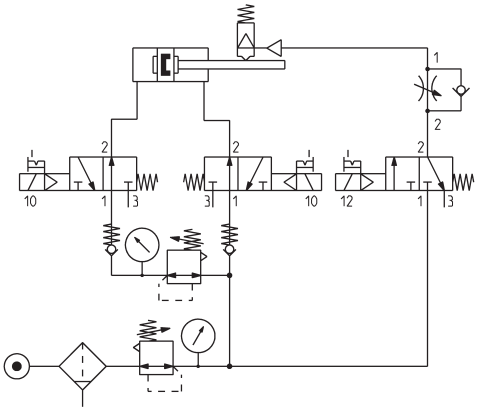

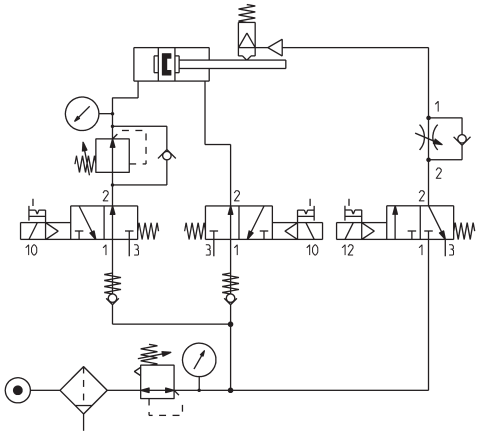

For a correct use of the rod lock Mod. RLC a pneumatic connection is recommended (as shown in the examples).

ROD EXTENSION and HOLDING FORCE

Table showing the rod extensions which are necessary for the rod lock mounting.

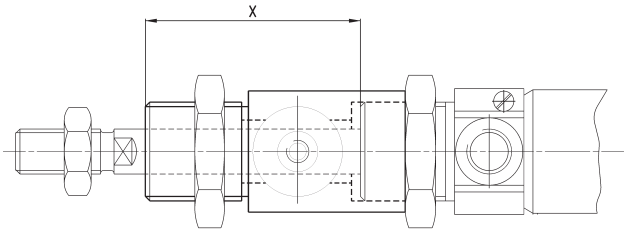

ø	Rod extension [X] (mm)	Holding force [static load] (N)
20	+50	300
25	+48	400
32	+40	650
40	+43	1100
50	+57	1600
63	+57	2500
80	+80	4000
100	+80	6300
125	+125	8800

Series RL Rod Lock - Ø 20 - 25 mm

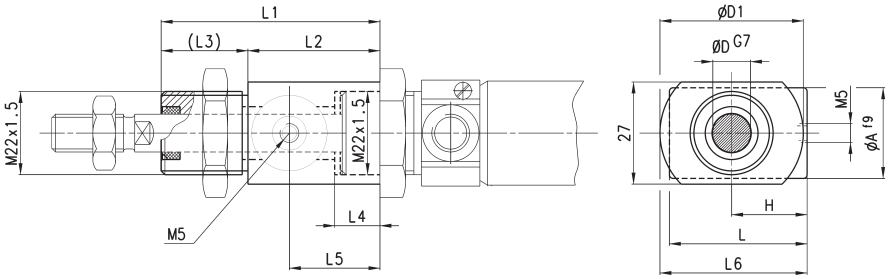

DIMENSIONS												
Mod.	Ø	D	A	D1	H	L	L1	L2	L3	L4	L5	L6
RLC-24-20	20	8	20	38	21	40	58	35	23	12	24	40
RLC-24-25	25	10	20	38	21	40	58	35	23	12	24	40

Series RL Rod Lock - Ø 32 ÷ 125 mm

Supplied with:
- 4x screws

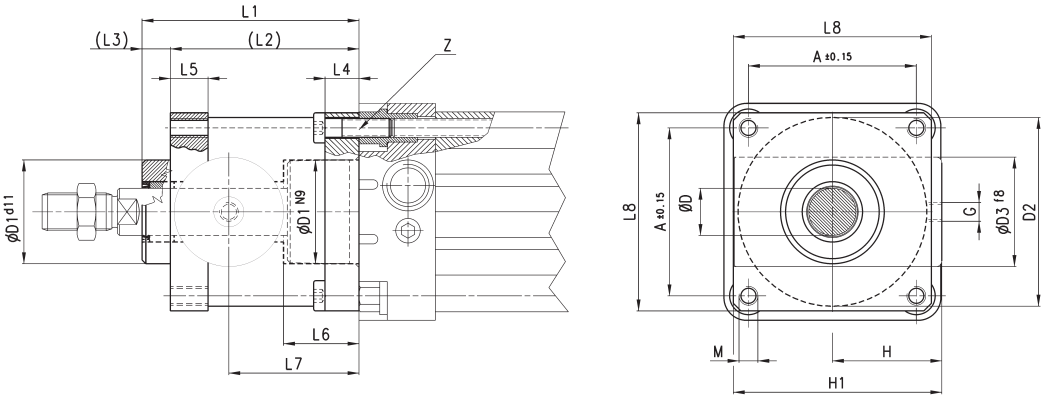

DIMENSIONS																			
Mod.	Ø	D	D1	D2	D3	G	L1	L2	L3	L4	L5	L6	L7	L8	A	M	H	H1	Z
RLC-41-32	32	12	30,5	35	25	M5	58	48	10	8	13	20,5	34	45	32,5	M6	25,5	46,5	M6X20
RLC-41-40	40	16	35	40	28	G1/8	65	55	10	8	13	22,5	38	50	38	M6	30	53	M6X20
RLC-41-50	50	20	40	50	35	G1/8	82	70	12	15	16	29,5	48	60	46,5	M8	36	64	M8X30
RLC-41-63	63	20	45	60	38	G1/8	82	70	12	15	16	29,5	49,5	70	56,5	M8	40	75	M8X30
RLC-41-80	80	25	45	80	48	G1/8	110	90	20	18	20	35	61	90	72	M10	50	95	M10X35
RLC-41-100	100	25	55	100	58	G1/8	115	100	15	18	20	39	69	105	89	M10	58	110,5	M10X35
RLC-41-125	125	32	60	130	65	G1/8	167	122	45	22	30	51	86,5	140	110	M12	80	150	M12X40

Series SA shock absorbers

7 different sizes
Threads: M8x1 - M10x1 - M12x1 - M14x1,5 - M20x1,5 - M25x1,5 - M27x1,5

- Suitable for different applications
- Usable with or without a stop collar
- Self compensating

Series SA shock absorbers exist in 7 different sizes and are used to provide impact and noise absorbtion when stopping objects in motion. Series SA is of a self compensating type which makes it suitable for different applications such as low load/high speed or high load/low speed applications without requiring any additional adjustments on the shock absorber.
Series SA is designed so it can be used with or without a stop collar.

By using shock absorber Series SA, following advantages would be provided.
- Increased production rate
- Reduced maintenance costs
- Reduce noise and vibration
- Extended life time of the machine.

GENERAL DATA

Model	SA-0806 SA-1007 SA-1210 SA-1412 SA-2015 SA-2525 SA-2725
Type of construction	Hydraulic shock absorber, self compensating
Materials	Body: steel, black coated Piston rod: carbon steel chrome plated Piston: carbon steel Sealings: NBR
Threaded body	M8x 1 M10x 1 M12 x 1 M14x 1,5 M20x 1,5 M25x 1,5 M27x 1,5
Absorption stroke (mm)	6 7 10 12 15 25 25
Max. Energy absorption per cycle, Et (Nm)	3 6 12 20 59 80 147
Max. Energy absorption per hour, ETc, (Nm)	7000 12400 22500 33000 38000 60000 72000
Max. effective mass Me (kg)	6 12 22 40 120 180 270
Max N° cycles per minute	80 70 40 70 45 20 10
Impact speed, v (m/s) **min. - max.**	0,3 - 2,5 0,3 - 3,5 0,3 - 4,0 0,3 - 5,0 0,3 - 5,0 0,3 - 5,0 0,3 - 5,0
Weight (g)	15 25 32 65 150 295 360
Working temperature (°C)	-10°C ÷ +80°C

CODING EXAMPLE

SA	-	2015	

SA	SERIES
0806	SIZE/STROKE 0806 = Size M8 x 1 / Stroke 6 mm 1007 = Size M10 x 1 / Stroke 7 mm 1210 = Size M12 x 1 / Stroke 10 mm 1412 = Size M14 x 1,5 / Stroke 12 mm 2015 = Size M20 x 1,5 / Stroke 15 mm 2525 = Size M25x 1,5 / Stroke 25 mm 2725 = Size M27 x 1,5 / Stroke 25 mm
	VERSION = standard, with cap W = Without cap (on request)

Shock Absorbers Series SA

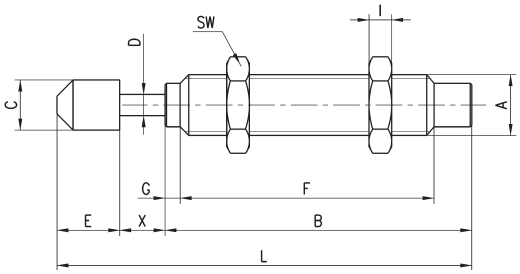

DIMENSIONS

Mod.	A	B	C	D	E	F	G	I	L	SW	X	Weight (g)
SA-0806W	M8X1	40.6	-	2.9	-	33.6	2	3	-	11	6	15
SA-0806	M8X1	40.6	6.6	2.9	8.8	33.6	2	3	55.4	11	6	17
SA-1007W	M10X1	47	-	3	-	39	3	3	-	12.7	7	25
SA-1007	M10X1	47	8.6	3	8.6	39	3	3	62.6	12.7	7	28
SA-1210W	M12X1	52.5	-	3	-	44	3	4	-	14	10	29
SA-1210	M12X1	52.5	10.3	3	8.8	44	3	4	71.3	14	10	32
SA-1412W	M14X1.5	67	-	4	-	58	4	5	-	19	12	65
SA-1412	M14X1.5	67	12	4	10.5	58	4	5	89.5	19	12	70
SA-2015W	M20X1.5	73	-	6	-	62	4	7	-	26	15	150
SA-2015	M20X1.5	73	17.8	6	15.8	62	4	7	103.8	26	15	160
SA-2525W	M25X1.5	92	-	8	-	82	-	9	-	32	25	280
SA-2525	M25X1.5	92	22	8	19	82	-	9	136	32	25	295
SA-2725W	M27X1.5	99	-	8	-	86	5	6.5	-	32	25	360
SA-2725	M27X1.5	99	22	8	19	86	5	6.5	143	32	25	375

Adjusted stroke nut

A = Initial position
B = Final position

1 = Impact object
2 = Adjusted stroke nut
3 = Shock absorber
4 = Fixing screw
5 = Stroke
6 = Stroke length

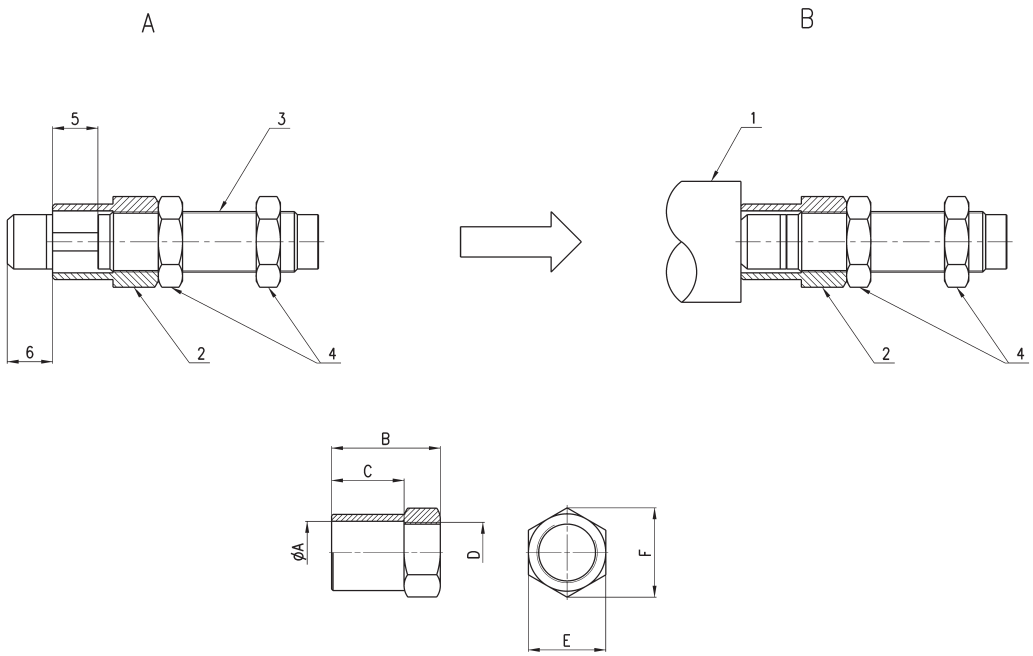

DIMENSIONS							
Mod.		Ø A	B	C	D	E	F
SA-08SC	(for SA-0806)	10.5	14	9	M8X1	11	12.7
SA-10SC	(for SA-1007)	12	16	10	M10X1	13	14.7
SA-12SC	(for SA-1210)	14.5	20	13	M12X1	16	18.5
SA-14SC	(for SA-1412)	14.5	27	15	M14X1	19	21.9
SA-20SC	(for SA-2015)	27.8	35	20	M20X1.5	26	30
SA-25SC	(for SA-2525)	5.8	45	30	M25X1.5	32	37
SA-27SC	(for SA-2725)	20.7	65	50	M27X1.5	32	37

Contacts

Camozzi Automation S.p.A.
Società Unipersonale
Via Eritrea, 20/I
25126 Brescia
Italy
Tel. +39 030 37921
info@camozzi.com

10/2021

CAMOZZI
Automation

A Camozzi Group Company
www.camozzi.com