NEEDLE BEARINGS

THE SPECIALIST FOR MOTION TECHNOLOGY

Nadella is an expert system partner for all areas of motion technology, with specialized manufacturer companies and a worldwide sales network.

Wherever innovative ideas, customized solutions, precision and reliability are required, developers and design engineers rely on our products and solutions.

BRANDS AND PRODUCTS OVERVIEW

Linear Guides

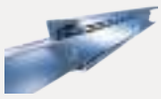
Telescopic Rails

Linear Modules

Linear Axes and Systems

Circular Systems

Bearings and Cam Followers

Adjusting Nuts & Rings

Rod Ends and Spherical Plain Bearings

Clevises and Ball/Axial Joints

Precision Ball Screws

Rolled Ball Screws

MILESTONES

1930
NADELLA foundation in France

1958
Founding of NADELLA GMBH in Germany

1963
Founding of NADELLA S.P.A. in Italy

1984
Start of development and sale of Nadella Linear

2012
New Nadella subsidiaries in China and USA

2014
Acquisition of DURBAL

2018
Acquisition of CHIAVETTE UNIFICATE

2019
Founding of Nadella Motion Technology

2020
New Nadella subsidiaries in France and Spain
Acquisition of SHUTON and IPIRANGA

2021
Acquisition of DAMO

2022
Orchestra enters in Nadella Group

2023
Timken acquires Nadella Group

KEY NUMBERS

8 manufacturing plants

14 main locations

Italy, Germany, France, United Kingdom, Spain, United States, China

leading the way in the international markets

in over **60** countries

for more than **90** years

APPLICATION SECTORS

SUMMARY

PAGE 05	1. PRODUCTS OVERVIEW
PAGE 27	2. RADIAL NEEDLE
PAGE 45	3. NEEDLE BUSHES
PAGE 69	4. BEARINGS WITH CAGE
PAGE 81	5. FULL COMPLEMENT NEEDLE BEARINGS
PAGE 93	6. CAM FOLLOWERS
PAGE 127	7. NEEDLE AND ROLLER THRUST BEARINGS
PAGE 141	8. COMBINED BEARINGS
PAGE 157	9. SEALING RINGS
PAGE 163	10. NEEDLE ROLLERS
PAGE 173	11. INNER RINGS
PAGE 186	12. CODE SYMBOLS

PRODUCT OVERVIEW

1

PAGE 06 1.1 MEASUREMENT UNITS

PAGE 07 1.2 LIST OF CONTENTS

PAGE 08 1.3 TECHNICAL FEATURES

PAGE 19 1.4 APPLICATIONS

PRODUCT OVERVIEW
MEASUREMENT UNITS

1.1

Unit	S.I. System		Multiple or part		Equivalent
	title	symbol	title	symbol	
length	metre	m	millimeter	mm	1 mm = 10^{-3} m
time	second	s	micron	µm	1 µm = 10^{-6} m
speed	metre per second	m/s	hour	h	1 h = 3600 s
acceleration	metre per square second	m/s²	minute	min	1 min = 60 s
speed (rotational)	revolutions per minute	min^{-1}			
mass	kilogramme	kg	gram	g	1 g = 10^{-3} kg
force	newton	N	kilonewton		1 N = 10^{-3} kN
moment of force	newton metre	Nm			
stress	pascal	Pa	megapascal		1 Mpa = 1N/mm²
kinematic viscosity	square metre per second	m²/s	square millimiters per second		1 mm²/s = 1 cSt
temperature	degrees centigrade	C°			

Comments

The information contained in this catalogue is subject to change.
Nadella does not accept any responsibility for errors or omissions.

Information and advice contained herein may be insufficient given the conditions of specific applications.
Consult our Technical Department..

Certain products mentioned in this catalogue involve proprietary rights of manufacture, Trademarks and Patents.

PRODUCT OVERVIEW
LIST OF CONTENTS

1.2

NEEDLE BEARINGS		PAGE
Radial needle roller and cage assemblies	K K..ZW	27
Needle bushes	HK BK HK.RS BK.RS HK.2RS DL DLF	45
Bearings with cage Guided needles	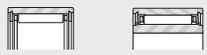 NK-NKS NKJ-NKJS	69
Full complement needle bearings	RNA NA	81
Cam followers	GC, GCL FG, FP, FPL, FGL FGU, FGUL RNA 11000	93
Needle thrust bearings Roller thrust bearings	AX AXZ ARZ CP	125
Combined bearings	RAX 700 RAXF 700 RAX 400 RAXPZ 400 RAXNPZ 400	139
Sealing rings	DH	157
Needle rollers	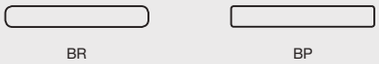 BR BP	163
Summary table Inner rings	JR, JR..JS1 BI / BIC	173
Tolerances tables		184
Code symbols		186

PRODUCT OVERVIEW
TECHNICAL FEATURES

1. GENERAL

The choice of a bearing depends on many factors that need to be examined in order to obtain the most successful results at the lowest cost.
In most cases the selection should be made when the overall design of the machine has been decided.
Dimensional limits are then known, also the speeds and loads. At this stage the choice can be made from the many types of bearings offered from the standard ranges. The notes given in this section will generally permit one to select the most suitable bearing for each application.
As for all other types of bearing, the results obtained with needle bearing products depend to a large extent on the design and method of assembly, loading, and alignment between inner and outer rings.
Bearing alignment depends first of all on the geometry of the parts involved and secondly on the deflection of the shaft under load. The shaft diameter should therefore be sufficient to prevent large deflections. This is easier to achieve using needle bearings because they occupy a small radial area.

2. BEARING TYPE SELECTION

Bearing type selection is made after the general design concept of the mechanism has been established and the application requirements carefully evaluated.

The ability of a bearing to support radial or axial loads, tolerate misalignments, be suitable for high speeds or loads are the main criteria for guiding the selection in the correct way. To navigate the families of bearings in this catalogue an initial assessment can be made on the basis of the table below. Further details are specified in the relevant chapters.

	Radial needle roller cage	Caged needle bushes	Full complement needle bushes	Caged needle bearings	Full complement needle bearings	Needle rollers	Thrust bearings	Combined bearings 1)
Radial load	High	Moderate	High	High	Very high	Very high	None	High
Axial load	None	None	None	None	None	None	Very high	Very high
Speed	Very high	High	Moderate	Very high	Moderate	Moderate	Moderate	Moderate
Misalignment tolerance	Moderate	Moderte	Low	Moderate	Moderate	Very low	Low	Low
Grease life	High	High	Moderate	High	Moderate	Moderate	Low	Low
Friction	Very low	Low	High	Very low	High	High	High	Moderate
Precision	Very high	Moderate	Moderate	High	High	Very high	High	Very high
Cross section	Very low	Low	Low	Moderate	Moderate	Very low	Moderate	Moderate
Cost	Low	Low	Low	Moderate	Moderate	Low	High	High

1) RAX 700 series not included

3. CALCULATIONS FOR RADIAL AND THRUST BEARINGS

The details following enable one to evaluate lifetime of radial bearings and thrust bearings and also combined bearings which comprise a radial and a thrust component. These are calculated separately without transforming the axial load into an equivalent radial load.
The calculation for a radial or thrust bearing must take account of the following principal factors:

- Actual supported loads and possible shock loads
- Rotation speed
- Operating temperature
- Hardness of the bearing raceways

Other features such as lubrication, sealing and alignment must be considered in order to avoid introducing unfavourable factors.
The formulas for lifetime calculations here reported are considered valid under standard conditions, generally useful for first-sizing or product comparison.For further details on correction factors for bearing lifetime in applications, please refer to ISO281 standards and to Nadella Technical Service.
The life calculation of a radial bearing or a thrust bearing under rotation is established from the dynamic capacity C indicated in the tables of dimensions. The static capacity Co enables one to determine the maximum load under certain operating conditions (see table above).

3.1. BEARING LIFETIME

3.1.1 Dynamic capacity C

The dynamic capacity of a bearing is the constant radial load which it can support during one million revolutions before the first signs of fatigue appear on a ring or rolling element. For a thrust bearing, the capacity for one million revolutions assumes a constant axial load centred in line with the axis of rotation.
The dynamic capacity is a reference value only; the base value of one million revolutions has been chosen for ease of calculation. Since applied loading as great as the dynamic capacity tends to cause local plastic deformations of the rolling surfaces that may affect their operations.
The dynamic capacity C for bearings shown in the tables of dimensions has been established in conformance with the ISO Standard 281.

3.1.2 Nominal life L_{10}

The life of a (or thrust bearing) is the number of revolutions (or the number of hours at constant speed) that it will maintain before showing the first signs of material fatigue.
The relationship between the life in millions of revolutions L10, the dynamic capacity C and the supported load P, is given by the formula:

$$L_{10} = \left(\frac{C}{P}\right)^{p}$$

in this expression p is equal to 10/3 for needle or roller bearings. In order to assess the importance of the influence of load on the life expectancy, one should note for example that, if the load on a bearing is doubled, its life is reduced by a factor of 10. The formula above is independent of speed of rotation which must not exceed the recommended limit in respect of the radial bearing or the thrust bearing used an d the method of lubrication. If the speed of rotation n (r.p.m.) is constant, the life is given in hours by the function:

$$L_{10\,h} = \frac{L_{10} \times 10^{6}}{60\ n}$$

The above formula will ensure that 90% of the bearings operating under the same conditions will attain at least the calculated L_{10} life, known as the nominal life (the figure 10 being the percentage of bearings which may not attain this life). The formulae are based on the use of standard quality bearing steel and assume a satisfactory method of lubrication.The formulas for life calculation are effective for an applied load smaller than 0.5 C.

3.1.3 Modified life L_{na}

In conditions different from the mentioned above, a modified life Lna can be determined (in millions of revolutions) following the general formula:

$$L_{na} = a_1 \cdot a_{ISO} \cdot L_{10}$$

in which a_1 and a_{ISO} are correction factors linked respectively to reliability, contamination and lubrication.

Reliability correction factor a_1

A reliability factor in excess of 90% may be required in certain industries fields, such as aviation, for reasons of security and to reduce the risk of a very costly immobilisation. The table below indicates the values of the correction factor a_1 as a function of reliability:

Reliability %	Factor a_1	Modified life L_{na1}
90	1	L_{10}
95	0,64	L_5
96	0,55	L_4
97	0,47	L_3
98	0,37	L_2
99	0,25	L_1
99,5	0,175	$L_{0,5}$
99,9	0,093	$L_{0,1}$

In order to select as an example a bearing of life L_4 (reliability 96%) it is necessary to estimate life L_{10} with the formula $L_{10}=(C/P)^{10/3}$ starting from the dynamic capacity C given in this catalogue:

$$L_4 = 0.55 \cdot L_{10}$$

Correction factor a_{ISO}

The factors that affect bearing life are numerous, and their analysis is not one in this catalogue. The effects of temperature, misalignment, bearing clearance, cleaning and lubrication conditions, which require a detailed discussion is beyond the scope of the product catalogue. For a more detailed discussion, please refer to Standards:

ISO 281:2007 introducing the coefficient aISO to take into account the effects of lubrication and cleanliness of the lubricant.

Nadella technical service is available for advice on the choices to be made in special cases.

3.1.4 Variable loads and speeds a_{ISO}

When the loads and speeds are variable, the life calculation can only be made by first establishing an assumed constant load and constant speed equivalent in their effect on the fatigue life.

This type of operating condition is frequently met and the possible variations although cyclical are numerous. One encounters this feature in particular, in variable speed drives on some supports, but constant on each support for an interval of time referring to the total operating time (example: change of speed). The equivalent load P and the equivalent speed n are obtained from the following formulas:

$$P = \sqrt[p]{\frac{m_1 n_1 P_1^p + m_2 n_2 P_2^p + \ldots + m_n n_n P_n^p}{m_1 n_1 + m_2 n_2 + \ldots + m_n n_n}}$$

$$n = m_1 n_1 + m_2 n_2 + \ldots + m_n n_n$$

in which:

- $m_1, m_2, \ldots, m_n$: interval of operating time under constant load and speed (by definition: $m_1 + m_2 + \ldots + m_n = 1$)
- $n_1, n_2, \ldots, n_n$: constant speed corresponding respectively to intervals of time $m_1, m_2, \ldots, m_n$
- P_1, P_2, P_n : costant loads corresponding respectively to intervals of time $m_1, m_2, \ldots, m_n$

For needles and roller bearings and thrust bearings, p is equal to 10/3.

Whilst at constant speed, the load varies linearly during a given time, between a minimum P_{min} and a maximum P_{max}. the equivalent load is given by:

$$P = \frac{P_{min} + 2\,P_{max}}{3}$$

3.1.5 Oscillating motion

In order to calculate the life during oscillating motion it is necessary to determine an equivalent speed n in revolutions per minute from the formula:

$$n = \frac{n_{osc}\alpha}{180}$$

n_{osc} : interval of operating time under constant load and speed (by definition: $m_1 + m_2 + \ldots + m_n = 1$)

α : constant speed corresponding respectively to intervals of time $m_1, m_2, \ldots, m_n$

However, this formula risks being in error and giving inaccurate lives for oscillations at small amplitudes. It is therefore recommended not to apply it for angles of oscillation below 15°.

When the angle of oscillation is very small fretting corrosion is likely to be produced and a suitable lubricant must be chosen in consequence. Experience confirms that full complement needle bearings provide better results under this phenomenon in view of their better load sharing capability.

3.1.6 Application criteria

The life calculation may be unreliable when values for speed and load reach the ultimate limits. A low speed and/or load can yield an extremely long calculated life but this will be limited in practice by other operating factors such as sealing, lubrication and maintenance, all of which have a decisive influence on the life of the product in such cases.

3.2. MINIMUM LOAD

Slippage can occur if loads are too light and, if accompanied by inadequate lubrication, cause damage to the bearings. The minimum load for bearings with cage must be

For radial bearings

- $F_{r\,min} = 0{,}04C$ (C is the Dynamic Capacity for lifetime calculation)

For thrust bearings are correct the formulas

- Needle bearings $Fa_{min} = 0{,}005\ Co$ (Co is the Static Capacity)
- Roller bearings $Fa_{min} = 0{,}001\ Co$ (Co is the Static Capacity)

3.3. STATIC CAPACITY Co AND LIMIT LOAD Po

The static capacity Co given in the tables of dimensions has been established in conformance with ISO Specification 76. This takes into consideration the maximum admissible contact stress (Hertzian stress). The value currently being adopted in 4000 MPa.
Since permanent deformation is produced as readily in a bearing rotating as in one that is stationary, the static capacity Co determines the limit load Po which depends on the type of bearing and the operating conditions. When the limit load Po is given within the "min-max" range, the load applied may attain the indicated maximum provided it is applied continuously without sudden repeated variations. Alternatively, in the case of shock loads and vibrations, the load applied should not exceed the minimum value of limit load Po.
The relationship between the static capacity and the limit load defines the safety static factor fo:

$$fo = Co/Po$$

The suggested values for the safety factor, depend on the type of application and product

Solid rail bearings

- fo = 1,5 ... 2,5 Important requirements for smoothness of function, silent operation or accuracy of rotation
- fo = 1 ... 1,5 General applications
- fo = 0,7 ... 1 Slow rotation or oscillatory motion

$$Z = \frac{\pi \bullet \left(F_w + Ø\right)}{Ø}$$

Drawn bearings

- fo > 4 Important requirements for smoothness of function, silent opertion or accuracy of rotation
- fo > 3 General applications and oscillatory motion

$$Z = \frac{\pi \bullet \left(30 + 2{,}5\right)}{2{,}5}$$

Cam followers: the allowable load for cam followers depends on the static load of the bearing and from the strength of the stud and of the outer ring. Authorised values are listed in the tables of dimensions.

3.4. COEFFICIENT OF FRICTION

The resistance torque M of a bearing supporting a load P is given by the following relationships:

- **Radial bearing:** $M = f \cdot P \cdot \frac{Fw}{2}$

(where Fw is the diameter of the inner raceway of the bearing)

- **Thrust bearing:** $M = f \cdot P \cdot \frac{dm}{2}$ with $dm = \frac{E_b + E_a}{2}$

(where E_b and E_a are the internal and external raceway diameters given in table of dimensions).
The coefficient of friction f depends on a number or factors, amongst which are:

- Type of mechanism
- Applied load
- Speed of rotation
- Lubrication
- Surface finish and alignment of raceways

The mean values shown below are for oil lubrication

- f = 0,002 ÷ 0,003 for caged needle bearings
- f = 0,003 ÷ 0,004 for full complement bearings and needle thrust bearings
- f = 0,004 ÷ 0,005 for roller thrust bearings

These coefficients are applicable for values of C/P between 2 and 6 approximaely. For values less than or in excess of these limits the coefficient of friction f can be increased by 10 to 50%. Under starting conditions from rest, the values of f may be up to 1.5 times higher than those shown above. To evaluate the losses of the entire bearing assembly, account must also be taken of the friction due to the seals which can be significant, especially during "running-in".

3.5. LIMITING SPEED

The tabular pages list the limiting speed values calculated under normal operating conditions, properly mounting tolerances and clearance, absence of misalignments, low loads. For speed calculated with oil lubrication it is considered a normal flow of lubricant. A bearing may operate at a speed higher than the listed limiting speed with use of a clean, with good quality oil and correct flow to remove the heat generated in the table. Consult Nadella Technical Service for further details.
In case of high speed and acceleration to avoid internal slippage between the rolling elements and the raceways the relationship between the applied load P and the base load of the bearing C must be at least P/C > 0.02.
The wheels are supplied normally lubricated with grease suitable for general use, so the limit speed given in the dimension tables take account of such lubrication. For wheels without seals, lubricated with oil, the indicated speed limit may be increased by about 30% for continuous rotation (about 50% for intermittent rotation).

4. MOUNTING

4.1. SHAFT FOR BEARINGS WITHOUT INNER RING

4.1.1. Heat treatment of raceways

The minimum hardness of 58-64 HRC required to apply the calculations without reducing the basic capacities may be obtained with a through-hardened bearing steel or with a case-hardened and tempered steel. In the latter case, the hardened case must be homogeneous and regular over the entire surface of the raceway: the case depth is the thickness between the surface and the core having a hardness value of Vickers HV1 of 550 (see Standard NF A 04 202).
The minimum effective case depth of hardening depends on the applied load, the size of the rolling elements and the core strength of the steel used. To calculate the approximate case depth minimum depth can be used the following formula

Minimum case depth = (0,07÷0,12) x Dw
Dw = diameter of the rolling element

In any case the minimum suggested case depth is of 0.4 mm.
The load capacities shown in the tables of dimensions apply to raceways with a hardness of between 58 and 64 HRC.
The dynamic and static capacities are reduced when hardness values are lower than 58 and 54 HRC respectively according to the following table:

Hardness	HRC	60	58	56	54	52	50	48	45	40	35	30	25
	HV*	697	653	613	577	545	512	485	447	392	346	302	267
Coefficients for load reduction	Dyn.	1	1	0,93	0,84	0,73	0,63	0,52	0,43	0,31	0,23	0,15	0,11
	Stat.	1	1	1	1	0,96	0,86	0,77	0,65	0,50	0,39	0,30	0,25

4.1.2. Surface finish

The shafts or housing used directly as raceways for needles must have a surface finish acceptable for the operating conditions and the precision requirements:

- applications with high speeds and loads: Ra = 0,2 µm
- general applications: Ra = 0,35 µm

4.1.3. Tolerances and form deviations

The suggested tolerances for the mean shaft diameter are indicated in the appropriate chapters specific for every product.
The suggested tolerance for deviation from the cylindrical raceways form (radial bearings).

- Variation of mean shaft diameter within the length of the bearing raceway should not exceed 0.008 mm or one-half the diameter tolerance. The profile should never be concave (the core diameter must protrude to the diameter at the ends)
- Deviation from circular form: the minimum between 0.0025 mm and one quarter of diameter tolerance

For thrust bearings and combined bearings refer to the specific chapter prescriptions.

4.1.4. End chamfer
For the most effective assembly and preventing damage to the roller complements or needles, provide a chamfer to the ends of the raceway.

4.1.5. Surface in contact with seals
The surface in contact with the sealing lips must be finished with plunge cut grinding. The propeller subsequent to the grinding process without centers can create a pumping effect of the lubricant through the seal.

4.2. SHAFT FOR BEARINGS WITH INNER RING

4.2.1. Surface finish of the shaft
Maximum roughness suggested: Ra = 1,6 µm

4.2.2. Tolerances and form deviations
The suggested tolerances for the mean shaft diameter are indicated in the appropriate chapters specific for every product.
The suggested tolerance for deviation from the cylindrical raceways form (radial bearings)

- Variation of mean shaft diameter within the length of the bearing raceway: one-half of the diameter tolerance
- Deviation from circular form: one-half of the diameter tolerance

4.2.3. End chamfer
For the most effective assembly provide a chamfer to the ends of the shaft on which the inner ring must be inserted.

4.3. HOUSING FOR BEARINGS WITH OUTER RING

4.3.1. Surface finish of the shaft
Maximum roughness suggested: Ra = 1,6 µm

4.3.2. Tolerances and form deviations
The suggested tolerances for the housing is indicated in the appropriate chapters specific for every product.
The suggested tolerance for deviation of form is:

- Variation of mean housing diameter within the length in contact with needle: 0.013 mm
- Deviation from circular form: one-half of the diameter tolerance of the housing

4.3.3. End chamfer
For the most effective assembly provide a chamfer to the ends of the shaft on which the inner ring must be inserted.

4.3.4. Alignment between hole housing
When possible ream the housing of the same shaft with a single placement on the machine tool.

4.4. HOUSING FOR CAGES AND NEEDLES
Bearings are protected against oxidation with a corrosion protection, but normally supplied unlubricated. Please don't forget to lubricate them when mounting.

4.4.1 Requirements for materials, processing and finishing
Observe the rules for the shafts, paragraph 4.1.

4.4.2. Alignment between hole housing
When possible ream the housing of the same shaft with a single placement on the machine tool.

5. LUBRICATION
Bearings are protected against oxidation with a corrosion protection, but normally supplied unlubricated. Please don't forget to lubricate them when mounting.

PRODUCT OVERVIEW
TECHNICAL FEATURES

5.1. LUBRICANT FEATURES

Lubrication of a bearing provides a viscous film between the rolling elements in order to reduce heat and wear caused by friction. The lubricant can also assist in preventing corrosion and help to seal the bearing from the introduction of dirt and impurities; it reduces friction between the shaft and seals and lowers the noise level generated within the bearing.
Wherever the operating conditions permit, grease should be chosen in preference to oil, as it is more convenient to use and more economic. Furthermore, it acts as an efficient seal against the effects of dust and humidity. On account of its consistency, grease can improve the effectiveness of sealing rings and can be used on its own as a seal, when it is used to fill grooves or labyrinths provided for this purpose.
Alternatively, oil is necessary for high rotational speeds in excess of the limits advised for grease lubrication and in cases where there is a problem of heat dissipation. Oil can also remove moisture and impurities from the bearing and is usually easily controlled to monitor the state of lubrication. Oil lubrication is also necessary where it is used already in the function of the equipment, such as hydraulic motors and pumps, speed variators and gear boxes etc.
Oil and grease lubricants must be free of all impurities which could cause premature failure of the bearing and removal from service. Sand and metal particles are particularly injurious to bearings. Every precaution must be taken to assure the cleanliness of gear casings, pipes, grease nipples, couplings, as well as lubricant containers.
The efficiency of a lubricant decreases in service both by age and by the continuous mixing to which it is submitted. Therefore replenishment must take place at regular intervals, taking account of operating and environmental conditions (humidity, dirt, temperature) except for applications where the bearing has been lubricated for life with a suitable grease.

5.1.1. Base oil

It is the main constituent of a lubricant, being it an oil (obtained by adding base oil to chemical additives) or a grease (which is obtained by adding the thickener to the oil). Technically base oils differ between them for their chemical/physical properties and for their ability to work in particular conditions such as high temperatures or low temperatures or even in oxidizing environments, and so on.
The following table shows the main base oils and their main physical features distinguishing its capabilities.

	Mineral oil	Ester based oil	Polyglycol oil	Silicone oil	Fluorocarbon oil
Density [g/ml]	0.9	0.9	0.9 - 1.1	0.9 - 1.05	1.9
Viscosity index VI 1)	100	150	>200	200/500	50/150
Pour Point [°C] 2)	-10/-40	-30/-70	-20/-50	-30/80	-30/-70
Flash point [°C] 3)	200/250	230/300	150/300	150/300	No one
Oxidation resistance	Sufficient	Good	Good	Excellent	Excellent
Temperature stability	Sufficient	Good	Good	Excellent	Excellent
Lubricating ability 4)	Good	Good	Excellent	Low	Good
Compatibility with seals	Good	Low	Sufficient	Good	Good

1) The viscosity index represents the ability of the lubricant to maintain constant its viscosity with changes in temperature; An high value of index VI means good ability to maintain a constant viscosity (key parameter for oils).
2) The pour point is the lowest temperature at which the lubricant loses the ability to scroll (solidification), so it is an index for the utilization of the lubricant at low temperatures.
3) Minimum temperature at which the air / gas mixture above the lubricant will ignite if it gets too close to a heat source.
4) The lubricating ability indicates the ability of the lubricant to withstand large loads applied.

The mineral oils are used in most applications. Synthetic oils (such as esters, polyglycols, silicon) and finally the fluorocarbon that are special oils as chemically inert (due to the presence of fluoride) in the case of specific needs.
It is important to note the general rules on the viscosity of the oils:

- fluid oil = excellent refrigerant;
- thick oil = excellent lubricant;

Never use a lubricant with a viscosity greater than necessary.

5.1.2. Additives

The addition of additives to the base oil, allows to obtain an oil with performance features clearly higher than the base oil itself. The additives allow to reduce some negative sides of base oils, although a silicone oil (particularly weak to support applied loads) suitabley additiveted (eg with EP additives) will never be as a synthetic oil or polyglycol.
The following table shows the main technological characteristics related with additives.

Additives	Features
Anti-oxidants	They slow down the oxidation that creates deposits on the surfaces in contact with detriment to the lubricating fluid that deteriorates
Anti-corrosion	Slow chemical reactions with materials such as copper, aluminum and sulfur
Anti-rust	Slow down the chemical reactions with ferrous materials that give life to rust
Anti-wear	Slow down the wear phenomena of materials in contact with the lubricant
EP	Extreme Pressure it allows to increase the ability of the lubricant to withstand the applied load thereby reducing the danger of seizure
Detergents	Clean the metal surfaces from debris or oxidation products by emulsion
Dispersants	Maintain the oxidation and emulsion products in suspension, preventing their deposit on metal surfaces
Pour Point	Lower the flow temperature of a lubricant allowing its use at low temperatures
Enhancers of VI	Increase the viscosity index allowing to obtain a lubricant constant in a wide range of temperature. Used mainly to the extreme temperatures temperature
Anti-foaming	Reduce the danger of the formation of foam in the lubricant
Adhesiveness enhancers	Increase the adhesion of the lubricant to the surface with which it is in contact
Compatibility with seals	Good

5.1. GREASE LUBRICATION

Greases for bearings must possess high lubricity power, good mechanical stability, an effective oxidation resistance and good anti-rust features, especially for parts operating in humid environment or subjected to splashing water. Their consistency, generally of grade 1, 2 or 3 of the NLGI scale, must remain as stable as possible within the temperature limits allowed by their composition.

5.2.1. Main types of grease

The grease is a thick lubricant, it consists of the base oil, plus additives and a thickener which is very often composed of a soap.
Greases based on lithium soap are particularly suitable for the lubrication of needle and rollers bearings and thrust bearings. They can be used at operating temperatures between -30 and +120°C, and even up to 150°C if they are of good quality. They are generally fitted with anti-rust additives and offer a good protection against corrosion.
Greases based on sodium soap are suitable for the lubrication of the bearings up to approximately 100°C (minimum temperature -30°C) and ensure a good seal against dust. They can absorb small amounts of water without losing their lubricating properties, but high amounts of water will dissolve and cancel all their effectiveness.
Greases based on calcium soap are stable to water and can be used only up to 50 or 60°C. Their mechanical stability and their power anti-rust are weak. Their use as lubricants for bearings is therefore not recommended, but may be used in labyrinth seals. However, some grease calcium based, with increased mechanical stability and anti-rust power, can be used up to 100°C to lubricate bearings in a humid atmosphere.

	Lithium soap	Sodium soap	Calcium soap	Polyurea	Lithium aluminium complex soap
Temperature range	120	110	60	160	160
Drop point	190	260	100	230	260
Water resistance	Good	Low	Excellent	Excellent	Good
EP capacity	Good	Good	Good	Low	Excellent

5.2.2. Consistency

The parameter that determines the softness or hardness of the grease is the consistency, that is, the penetration of the lubricant. It is defined by the NLGI consistency scale of measurement, according to eight levels which corresponds to a range of values of the Worked Penetration, expressed in tenths of millimeter.

The following table shows the classes defined by the NLGI consistency.

NLGI class	Worked Penetration	Texture
000	445 - 475	Liquid
00	400 - 430	Semi-liquid
0	355 - 385	Very very soft
1	310 - 340	Very soft
2	265 - 295	Soft
3	220 - 250	Medium
4	175 - 205	Hard
5	130 - 160	Very hard
6	85 - 115	Extremely hard (as softwood)

5.2.3. Special grease

Greases with **EP additives** (high pressure) can be useful when bearings or thrust bearings must work with heavy loads. These greases generally offer a good lubricating power and have good anti-rust properties even in the presence of moisture. EP additives are used in the case of bearings with high load and low rotation speed, insufficient to create a meatus of lubricant sufficient to separate the metal parts.
Greases for **low temperatures**. The starting torque at low temperatures can be problematic. Suitable acids are commercially available.
Greases for **high temperatures**. The stability and duration of the grease is strongly influenced by temperature. In general the standard greases can be used up to 120°C-150°C. Further should be provide specific products. For high temperatures can be used lubricating pastes.

= Best Choice
= Compatible
= Borderline
= Incompatible

	Al Complex	Ba Complex	Ca Stearate	Ca 12Hydroxy	Ca Complex	Ca Sulfonate	ClayNon-Soap	Li Stearate	Li 12 Hydroxy	Li Complex	Polyurea	Polyurea S S
Aluminum Complex												
Barium Complex												
Calcium Stearate												
Calcium 12 Hydroxy												
Calcium Complex												
Calcium Sulfonate												
Clay Non-Soap												
Lithium Stearate												
Lithium 12 Hydroxy												
Lithium Complex												
Polyurea Conventional												
Polyurea Shear Stable												

5.2.4. Compatibility of greases

Certain greases are incompatible with others and, if they are mixed, their function will be impaired.
With greases considered as compatible, account should be taken of the reduction in their consistency when mixed and the maximum permissible temperature should be reduced accordingly.

5.2.5. Application

Grease can be introduced into the bearings at the time of assembly, care being taken to distribute it around the crown of the needles (see below "Quantity of grease"). The free space found in the bearing which is filled with grease, constitutes a reservoir and a reinforced seal.
This method is possible if replenishments of grease are necessary at regular maintenance periods, during the course of which one can dismount the bearings, clean and examine them. Otherwise one has to use a hand pump which forces grease into the bearing by means of valves and replenishes the adjacent reservoir and also the channels and labyrinth seals. The entry passage for the grease must directly abut the bearing or be in close proximity to it, in order that new fresh grease pushes out the used grease through the seals. For this reason the lip of the sealing ring must be oriented towards the outside of the bearing for it to rise under the force of the grease being ejected. This method has the advantage of removing impurities which could be introduced into the seals, particularly in the case of a highly contaminated atmosphere.
With greases considered as compatible, account should be taken of the reduction in their consistency when mixed and the maximum permissible temperature should be reduced accordingly.

5.2.6. Quantity of grease

The amount of grease that should be contained in a bearing can be established by considering the relationship of the limiting speed permissible for the grease nG to the speed of rotation n:

- $n_G/ng < 1{,}25$ minimum quantity; bearing must be lubricated with a small quantity of grease and the adjacent parts packed with grease
- $1{,}25 < n_G/n < 5$ 1/3 to 2/3 of the available volume
- $n_G/n > 5$ bearing must totally filled with grease

5.2.7. Re-lubrication

The frequency of grease re-lubrication depends on a number of factors, amongst which are the type of bearing and its dimensions, the speed and load, the temperature and ambient atmospheric conditions (humidity, acidity, pollution), the type of grease and sealing.
Only after controlled trials can the re-lubrication period be defined exactly and particular importance should be given to the effects of temperature, speed and humidity. Under normal conditions of function without unfavourable factors using an appropriate grease with a maximum temperature of 70°C, the re-lubrication interval TG in hours can be determined approximately from the formula:

$$T_G = \frac{K \cdot 10^8}{n \cdot \sqrt{F_w} \cdot \sqrt[4]{\frac{n}{n_G}}}$$

in which:

- n : speed of rotation
- n_G: permissible speed limit for grease lubrication (see page 14)
- F_w: diameter of inner raceway of bearing in mm
- K: coefficient according to the type of bearing:
  K = 32 for caged needle bearings K = 28 for full complement needle bearings K = 15 for needle or roller thrust bearings.

For the bearings below, the diameter Fw is replaced by the following dimensions, given in the table of dimensions:
Cam followers type FG and derivatives: dimension d_A
Needle or roller thrust bearings: dimension E_b
Cam followers type GC and derivatives: average dimension $\frac{d+d_A}{2}$

If the operating temperature exceeds 70°C, the interval TG determined from the formula above should, for each increase of 10°C, be reduced by 50%. However, this adjustment is not applicable beyond 115°C; for temperatures above this level trials should be made to determine the acceptable re-lubrication interval.
In the case of very slow speed rotation, which would give interval TG in excess of 35000 hours corresponding to 8 years operation at a rate of 12 hours per day, it is recommended to limit the period to a maximum of 3 years. For oscillating motion, the speed to be considered is the equivalent speed given by the formula on page 11. For very small amplitudes of oscillation it is recommended to reduce by half the calculated re-lubrication period TG.

5.3. OIL LUBRICATION

5.3.1. Viscosity

The essential characteristic of an oil is its basic kinematic viscosity in mm2/sec. at a reference temperature of 40°C according to ISO 3448.
The base viscosity V40 should be increased proportionately as the operating temperature increases but decreased as the speed increases, without however reaching a lower limit below which the film strength of the oil is impaired. For applications under moderate load without shocks up to about 1/5 of the dynamic capacity of the bearing, the viscosity VF at the operating temperature should not be lower than 12 mm2/sec.
For higher loads greater than 1/5 of the dynamic capacity the min. viscosity VF can be about 18 mm2/ sec. The variation in viscosity of an oil as a function of temperature is reduced as the number measuring its index of viscosity is increased. A viscosity index of 85 to 95 is generally satisfactory for the lubrication of bearings.
Diagram 1 below gives the viscosity VF required at the operating temperature from the ratio nH/n (nH: permitted speed limit for oil lubrication - n: speed rotation) and of the applied load (ratio C/P).
For the viscosity VF required in operation and from operating temperature, diagram 2 gives the base viscosity V40 at the reference temperature of 40°C.
Example: A bearing supporting a load P>C/5 and having a speed limit for oil lubrication of 10000 r.p.m., must rotate at 2000 r.p.m. at temperature up to 60°C.
The ratio $\frac{n_H}{n} = \frac{10.000}{2.000} = 5$ indicates a viscosity in operation VF = 60 mm2/sec. (diagram 1). For an operating temperature of 60°C, the horizontal VF = 60 cuts the vertical of 60°C (diagram 2) in the 150 zone, which is therefore the base viscosity required at 40°C.

5.3.2. Application of the lubricant

Oil must be supplied to the bearings regularly and in sufficient quantity but not abundantly, otherwise an abnormal increase in temperature can occur. According to the speed of rotation, the following general lubrication methods can be applied:
Lubrication by oil bath: is suitable for assemblies with the shaft horizontal and average speeds up to about half the values shown in the tables of dimensions. The level of oil in the bath at rest must reach the lowest point of the inner raceway of the bearing, though the movement of oil caused by the immersion of parts in the oil bath may be sufficient to feed bearings situated above this level, providing there are pipes and collectors to ensure sufficient oil reserve when starting.
Forced lubrication: the circuit is typically composed of the tank, the circulation pump, hoses and fittings, filter, possibly the radiator. Allows to effectively lubricate the bearings even in case of high speed, remove dirt and moisture from the bearing, if necessary to remove the heat generated in the bearing. For the thrust bearing, the arrival of the oil must be made, if possible, from the shaft to use the effect of centrifugation in the sense of movement.
Oil mist lubrication: consists of applying to the bearings oil finely atomised in suspension in a current of clean compressed air. The pressure created within the bearing effectively protects it from the introduction of dust, humid vapours and noxious gases. This procedure, which allows a substantial flow from a small quantity of oil, is used particularly for ultra-high speed applications in excess of speed limits given in the tables of dimensions.

6. BEARINGS STORAGE

With the exception of cam followers which are delivered lubricated with grease, all other needle or roller bearing products are supplied without grease, though protected against oxydation by an oil film compatible with most greases and mineral oil lubricants. Bearings should be stocked in a clean dry environment and retained in their original wrapping until the last moment before assembly. Even when assembling the bearing, care should be taken to prevent contamination from dirt or metallic particles and humidity.
In case of doubt concerning cleanliness of the bearing, it may be necessary to wash it in filtered petroleum. In so doing the bearing must be rotated and then suitably drained and dried. Smear the bearing with a suitable oil or grease to protect it against oxydation at the time of assembly.
Avoid the use of compressed air to clean or dry the bearing. And to avoid the risk that a needle roller can be removed from its place and launched (danger for the operator and the people close to him), and because the air introduces moisture into the component.

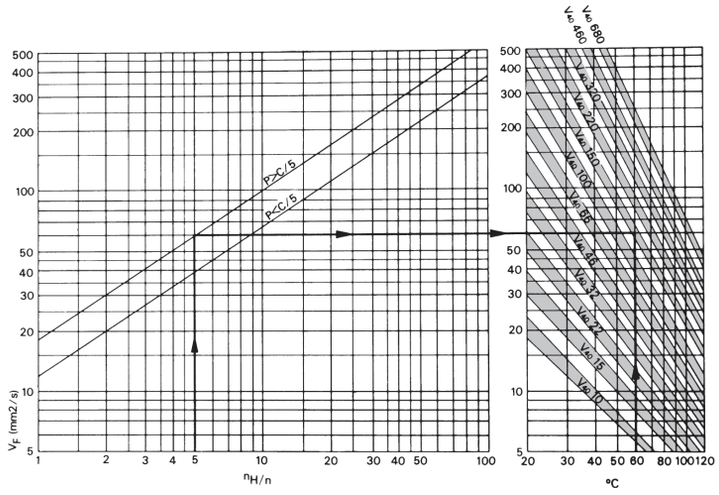

PRODUCT OVERVIEW
APPLICATIONS

TWO STROKE ENGINE FOR PORTABLE SAW

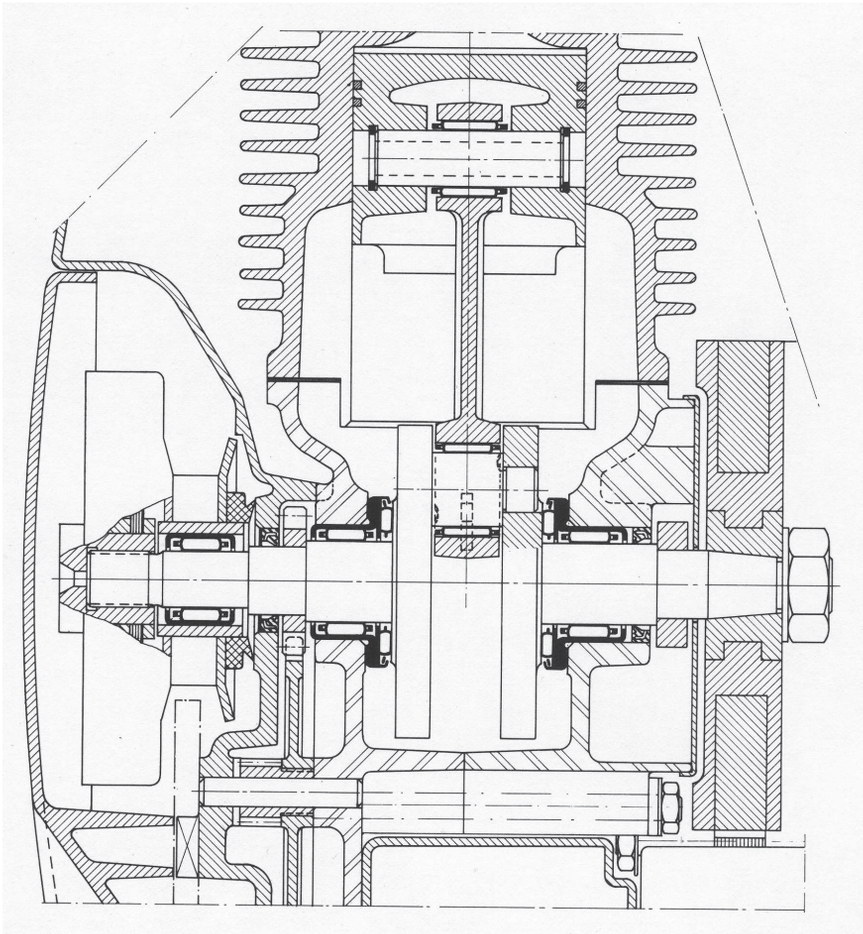

The high speeds attained by these engines subject the connecting rod bearings to extremely arduous working conditions, made worse by doubtful lubrication and high operating temperatures. Needle cages provide the solution to these difficulties, by virtue of their small size and special manufacturing methods. In the big end of the connecting rod, the steel cage is specially treated and is centred on its outside diameter.

In the little end, on the other hand, the needle cage is centred internally on the gudgeon pin. The cage extends beyond the width of the rod, thereby allowing the maximum possible length of needle to be utilised with consequent reduction of unit load.

Lateral location of the rod is ensured by the crankshaft webs, giving adequate clearance between the little end and the internal bosses of the piston.
The crankshaft runs in two RAX 714 combined bearings to carry the radial loads and provide axial location the least possible space. They are sealed by two DH lip seals. In the disengaged position, the pulley is supported by a HK 10 12 caged Needle Bushes. All faces and shafts acting as needle raceways are case hardened to 58 – 60 HRC.

PRODUCT OVERVIEW
APPLICATIONS

OFFSET PRESS- PAPER FEEDING MECHANISM

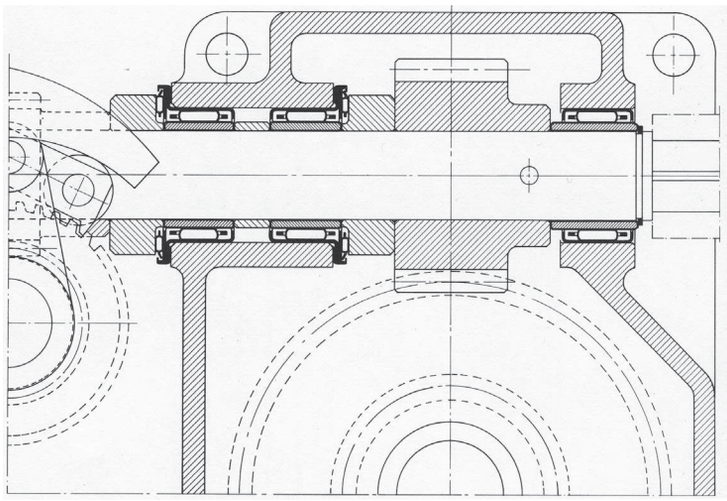

The pinion shaft is supported at one end, by two RAX 730 thin wall combined bearings, which ensure lateral location in both directions. The other end of the shaft runs in a HK 30 20 caged needle bushes.

The use of inner race avoids the necessity for hardening the shaft journals. The use of inner race avoids the necessity for hardening the shaft journals.

FOLLOWERS FOR OVERHEAD CONVEYOR

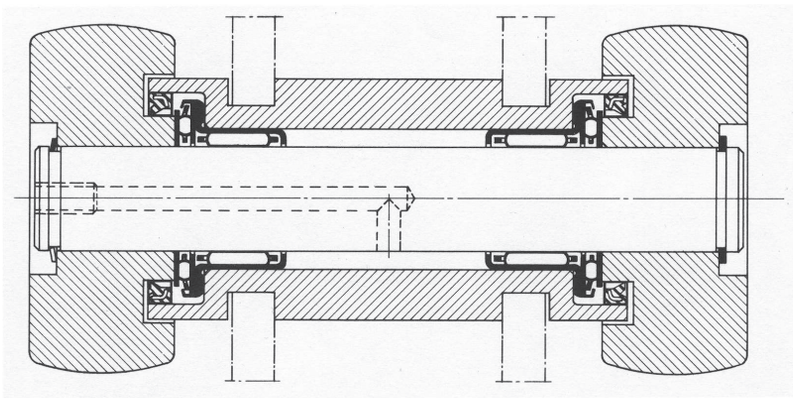

The common spindle carrying the two rollers turns between two RAX 718 combined bearings (with thrust plates) which ensures lateral location in both directions. The bearing surfaces of the shaft are hardened to 58 HRC.

Lubrication is by grease introduced via a nipple on the end of the shaft. Sealing is effected by sealing rings type DH28x35x4.

MILLER/BORER - GEAR BOX

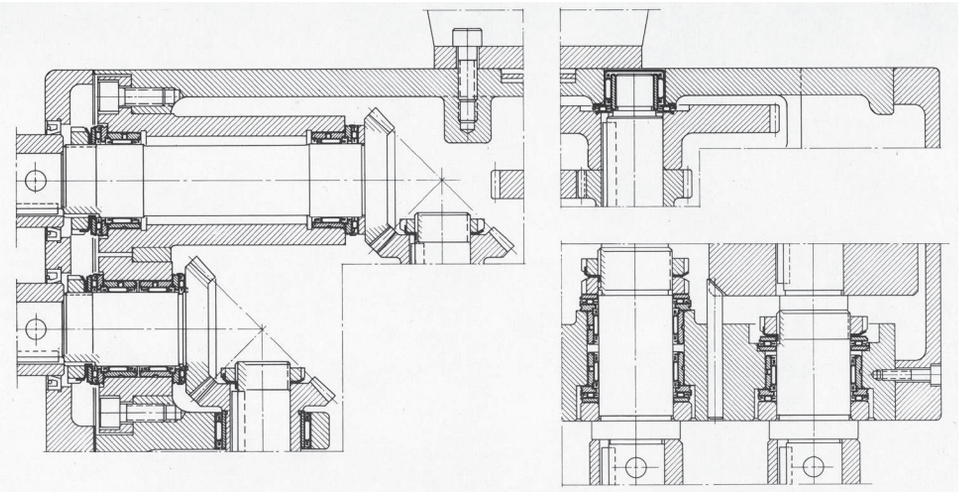

This assembly is particularly interesting in the method of radial and axial location of gears and spindles, by means of two RAX 400 combined bearings mounted in opposition which, even though located in close proximity, ensure adequate support. Of equal interest is the RAX 700 thin wall combined bearing whose closed end ensures perfect shaft sealing.

BORER SPINDLE

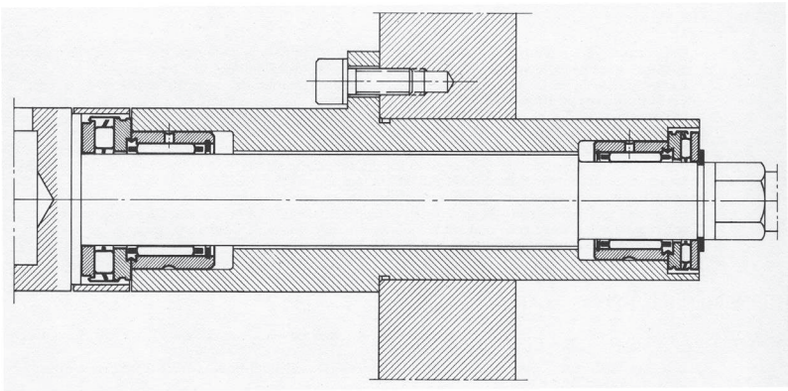

Case hardening the ends of the shaft to 60 HRC allows the use of bearings without inner rings. The front journal is a combined bearing with roller thrust and integral thrust washer. The inside diameter of the radial part of the bearing is held to tolerance F6, and the shaft to k5, giving the necessary low play for this precision application.
The thrust rollers of the combined bearing withstand the main axial loading. It is shielded from ingress of foreign bodies by the cover which retains the thrust washer and by a sleeve over the assembly. The rear housing incorporates an RAX 417 combined bearing (with thrust washer CP 2 17 30) on a k5 shaft. the needle thrust taking the axial loadings in the opposite direction to the main working load. A speed of 1 500 r.p.m. allows the use of grease for lubrication.

PRODUCT OVERVIEW
APPLICATIONS

HAND DRILL

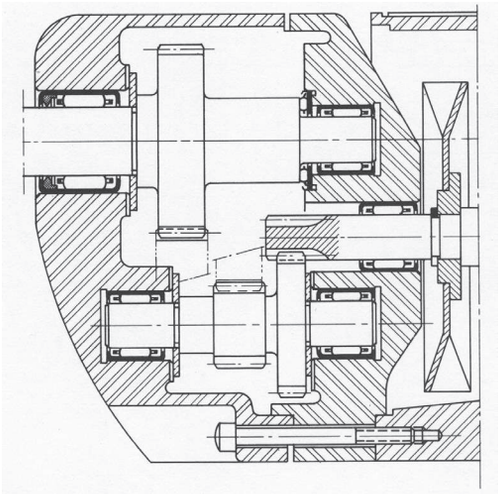

This example shows the use, on a hardened shaft, of type HK caged needle bushes, whose small radial thickness is particularly suitable for this type of application. The outer bearing of the output shaft is supported by a HK sealed, caged needle bush. Axial drilling loads are carried by a needle thrust bearing type AX.

ROLLING MILL FOLLOWER

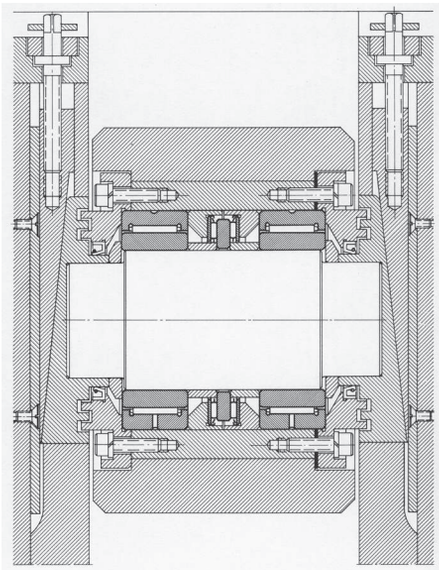

This roller guides hot rolled steel products whose temperature is around 100°C. A cooling spray limits the temperature of the roller to 50°C. Two NA 3 080 full complement bearing support the radial load which may be as high as 28 000 daN at a speed of 100 r.p.m.
Axial location of the rollers is by two AX needle thrust bearings of 90 mm bore, mounted either side of a CPR intermediate plate. Lip seals an d grease filled labyrinths effectively prevent the ingress of coolant into the bearing

GEAR PUMP

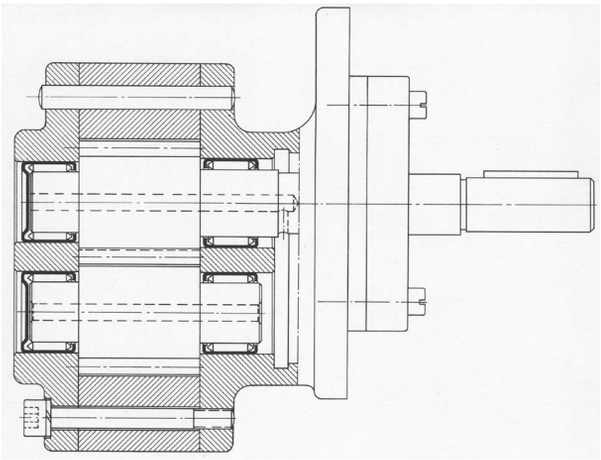

The operating conditions of this gear pump allow the use of DL and DLF full complement needle bushes bearings on the pinion journals. The DLF closed end needle bushes ensure the sealing of the bores in the bottom plate. The trunnions, acting as raceways under the needles, are hardened to 58 HRC.

RIGHT-ANGLE GEAR BOX

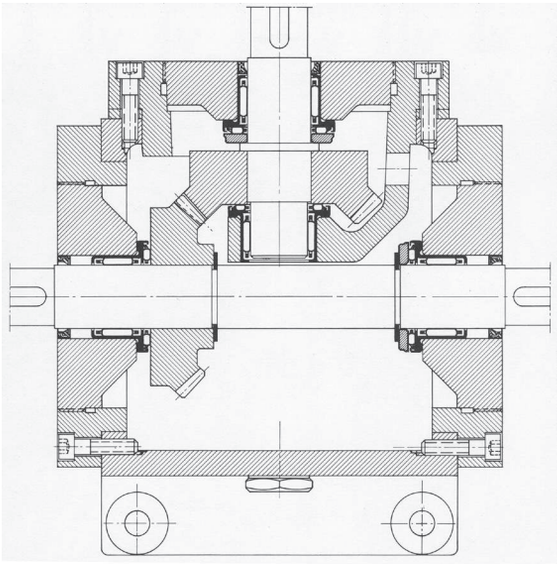

The driving shaft runs in two combined bearings types RAX 718 and RAX 720 with separate thrust plates. The driven shaft is mounted on two RAX 720 combined bearings of which one only has a separate thrust plate. The shaft journals and gear faces serving as bearing raceways are hardened to 58 HRC. The sealing of all shafts is ensured by type DH 20 26 sealing rings.

PRODUCT OVERVIEW
APPLICATIONS

DRUM SUPPORT ROLLERS

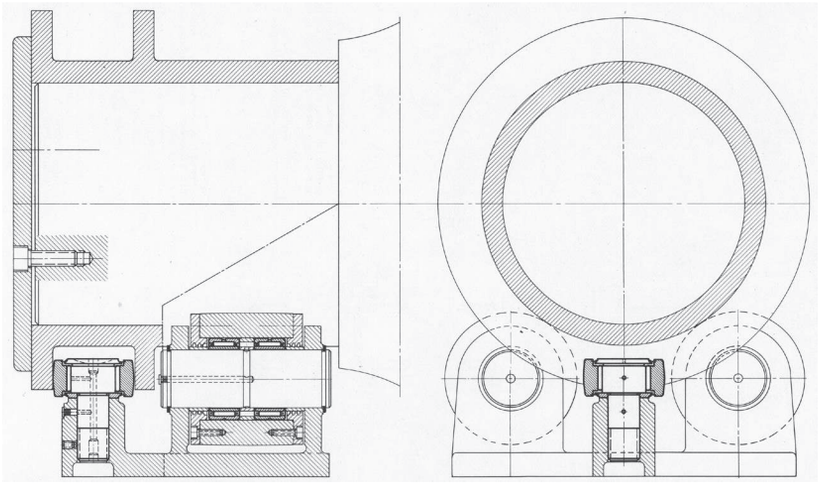

These rollers are each fitted with two NK 42/20 caged needle bearings with inner rings. A SW sealed cam follower with stud mounted vertically between the flanges of the sleeve, ensures lateral location of the cylinder in both directions.

This arrangement offers the following advantages:
- The bearings are determined by the load to be carried rather than by the diameter of the trunnion. It is clearly preferable to sue four small bearings, rather than one of unnecessarily large diameter.
- When the drum is heated internally, only a small amount of heat is transferred to the bearings via the outside diameter and the bearings do not have to have specially increased play to allow for expansion of the inner rings, as would be the case with a large bearing mounted on the trunnion.
- Finally the coefficient of friction is much reduced and less power is required to turn the cylinder.

HAND OPERATED VALVE

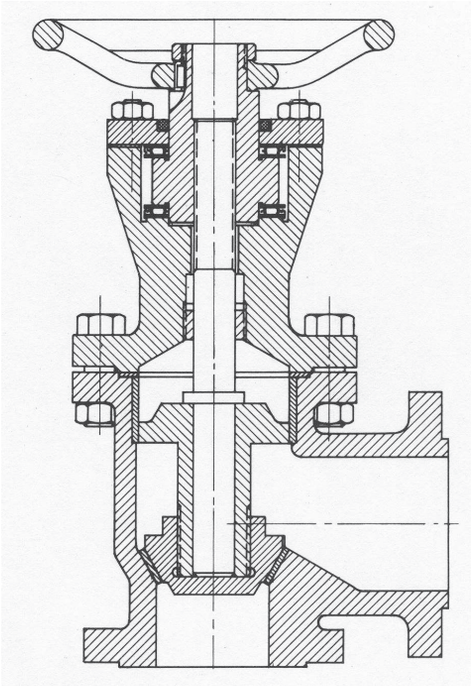

Threaded spindle support mounted between two needle thrust bearings, i.e. AX 45 65 (with matching thrust races) ensures .low frictional characteristics and easy manual operation.

"RAPIER" WEAVING MACHINE

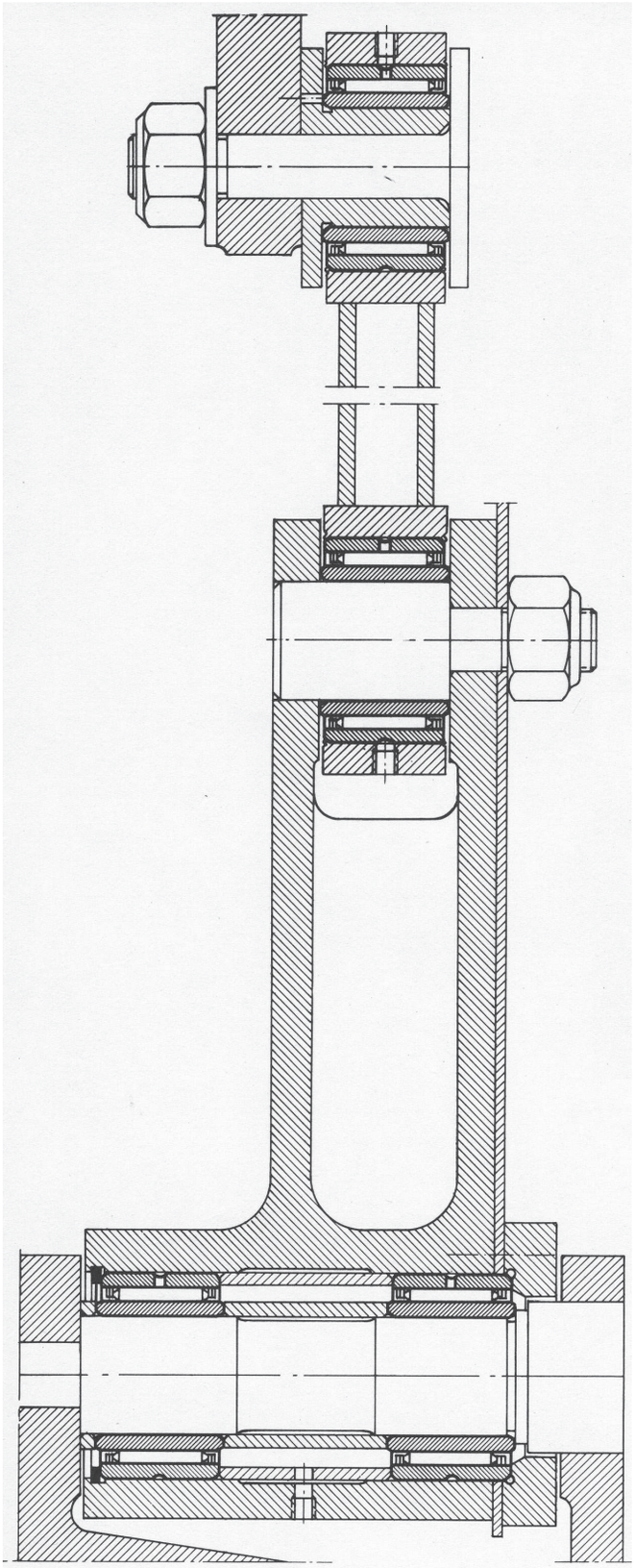

On this type of weaving machine, the shuttles are replaced by "spears" or "rapiers" whose function is to project the weft thread through the warp threads to produce larger widths of cloth. The fore and aft operation of these "rapiers" is by means of a system of connecting rods whose arms are fitted with NA 22 030 full complement needle bearings (with inner races) which fully cater for the shock loadings occasioned by reversals of directions. either rotationally or under oscillating movement.

RADIAL NEEDLE ROLLER AND CAGE ASSEMBLIES

2

PAGE 28 2.1 TECHNICAL FEATURES

PAGE 30 2.2 SINGLE-ROW, DOUBLE-ROW ASSEMBLIES

RADIAL NEEDLE ROLLER AND CAGE ASSEMBLIES
TECHNICAL FEATURES

Radial needle roller and cage assemblies have a steel cage that provides both inward and outward retention for the needle rollers. The designs provide maximum cage strength consistent with the inherent high loadratings of needle roller bearings.
Accurate guidance of the needle rollers by the cage bars allows for operation at high speeds. Needle roller and cage assemblies have either one or two rows of needle rollers.
Also listed are needle roller and cage assemblies using molded, one-piece glass-reinforced engineered polymer cages (suffix TN). These operate well at temperatures up to 120° C over extended periods. However, care should be exercised when these assemblies are lubricated with
oils containing additives as service life may be reduced if the operating temperature exceeds 100° C. At such high temperatures oil can deteriorate with time and it is suggested that oil change intervals are observed.

Needle rollers with relieved ends used in these assemblies are made of high-carbon chrome steel, through-hardened, ground and lapped to close tolerances for diameter and roundness.

Reference standards are:
- **ISO 3030** - needle roller bearings - radial needle roller and cage assemblies - boundary dimensions and tolerances.
- **DIN 5405 Section 1** - rolling bearings - needle roller bearings - radial needle roller and cage assemblies.
- **ANSI/ABMA 18.1**- needle roller bearings – radial, metric design.

TYPES OF RADIAL NEEDLE ROLLER AND CAGE ASSEMLIES

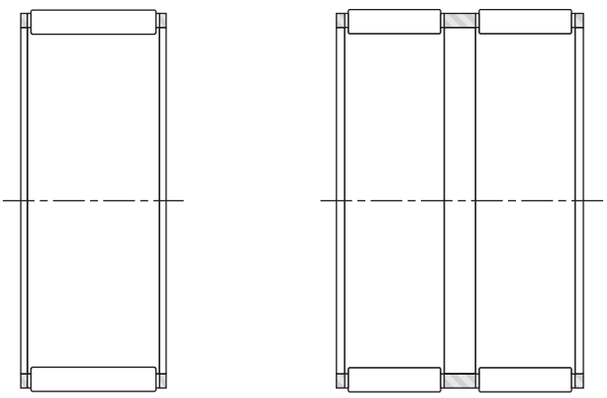

K **K ... ZW**

SUFFIXES

TN	molded cage of reinforced engineered polymer
ZW	double-row
TNZW	molded cage of reinforced engineered polymer - double-row
H	hardened steel cage
F	machined cage
FH	machined cage, case hardened
FV	machined cage, hardened and tempered

DIMENSIONAL ACCURACY
Needle roller groups
Radial needle roller and cage assemblies are supplied with needle roller complements subdivided into groups.
The groups are decided by Nadella if not differently decided during the order and with Grade G2 specified in **ISO 3096** standard (see needle rollers, page 195).
The needle roller and cage assemblies of one shipment usually contain needle rollers with group limits of between 0 … to -2, and -5 … -7 µm. For needle roller and cage assemblies with needle rollers of different group limits contact Technical Service Nadella.

MOUNTING DIMENSIONS

Design of raceways

Radial needle roller and cage assemblies use the housing bore as the outer raceway and the shaft as the inner raceway. To realize full bearing load rating and life, the housing bore and the shaft raceways must have the correct geometric and metallurgical characteristics. The housing should be of sufficient cross section to maintain adequate roundness and running clearance under load. Additional design details for housings and shafts used as outer and inner raceways can be found in the “MOUNTING” section of this catalogue. The only limit to precision of the radial clearance of a mounted assembly is the capability of the user to hold close tolerances on the inner and outer raceways. The suggested shaft tolerances are based on housing bore tolerance G6 and apply to metric series radial needle roller and cage assemblies with needle rollers of group limits between 0.000 and -0.007.

Suggested shaft tolerances for housing bores machined to G6

Nominal shaft diameter in mm	≤80	≤80
Radial clearance	Soft tolerance	
Smaller than normal	j5	h5
Normal	h5	g5
Large than normal	g5	f6

Axial guidance requirements

Radial needle roller and cage assembly must be axially guided by shoulders or other suitable means. The end guiding surfaces should be hardened to minimize wear and must provide sufficient axial clearance to prevent end-locking of the assembly.
Length tolerance H11 is suggested on dimension BC.
If end guidance is provided by a housing shoulder at one end and by a shaft shoulder at the other end, the shaft must be axially positioned to prevent end-locking of needle roller and cage assembly.

The housing and shaft shoulder heights should be 70 percent to 90 percent of the needle roller diameter to provide proper axial guidance.

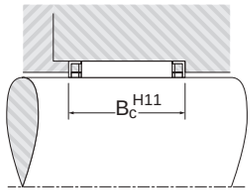

Guidance in the housing

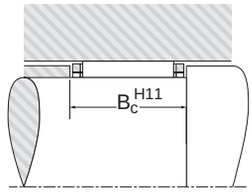

Guidance in the shaf

Mounting in sets

Radial needle roller and cage assemblies that are mounted side by side must have needle rollers of the same group limits to ensure-uniform load distribution.

LUBRICATION

Oil is the preferred lubricant for most applications. In critical applications involving high speeds, ample oil flow must be provided. Where assemblies are subjected to high centrifugal forces – such as in epicyclic gearing, or inertia forces, as in the small end of a connecting rod – the contact pressure between the cage and the raceway guiding surface becomes critical.
The allowable contact pressure depends on a combination of the induced force and the relative velocity between the cage and raceway and the rate of lubricant flow.
Consult the Nadella Technical Service when cages will be subjected to high induced forces.

SPECIAL DESIGNS

Radial needle roller and cage assemblies made to special dimensions or configurations – such as those which are split to assemble around a one-piece crankshaft – can be made available on special order.
Special coated or plated cages to enhance life, under conditions of marginal lubrication and high induced forces, also can be made available.

RADIAL NEEDLE ROLLER AND CAGE ASSEMBLIES
SINGLE-ROW, DOUBLE-ROW ASSEMBLIES

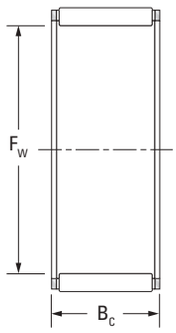

K

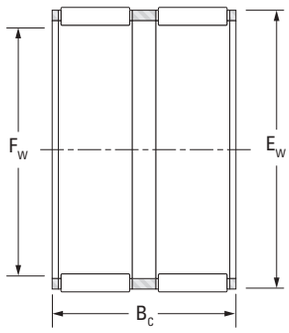

KZW

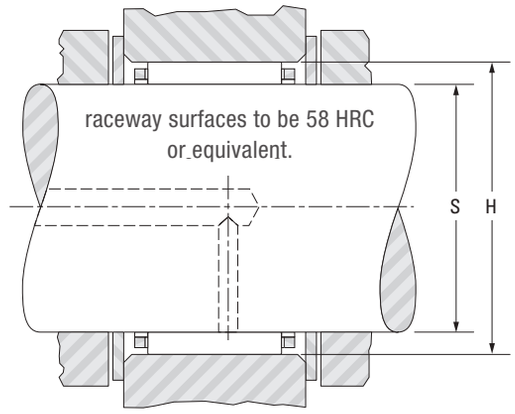

Shaft mm	Designation	F_w mm	E_w mm	B_c -0.20 -0.55 mm	Load ratings kN		Speed rating min^{-1}		S		H		Wt. kg
									Mounting dimensions				
					Dynamic	Static			Max.	Min.	Max.	Min.	
					C	C_0	Grease	Oil	mm	mm	mm	mm	
4	K4x7x7TN	4	7	7	1.83	1.32	34000	52000	4.000	3.995	7.014	7.005	0.0005
5	K5x8x8TN	5	8	8	2.18	1.71	31000	47000	5.000	4.995	8.014	8.005	0.0007
	K5x8x10TN	5	8	10	3.04	2.63	31000	47000	5.000	4.995	8.014	8.005	0.0008
	K5x9x13TN	5	9	13	4.29	3.55	26000	40000	5.000	4.995	8.014	9.005	0.002
6	K6x9x8H	6	9	8	3.19	2.90	29000	44000	6.000	5.995	9.014	9.005	0.0008
	K6x9x8TN	6	9	8	2.47	2.07	29000	44000	6.000	5.995	9.014	9.005	0.001
	K6x9x10TN	6	9	10	3.07	2.74	29000	44000	6.000	5.995	9.014	9.005	0.001
7	K7x10x8TN	7	10	8	2.74	2.44	28000	42000	7.000	6.994	10.014	10.005	0.001
	K7x10x10TN	7	10	10	3.40	3.22	28000	42000	7.000	6.994	10.014	10.005	0.001
	K7x11x15TN	7	11	15	6.44	6.24	23000	35000	7.000	6.994	11.017	11.006	0.003
8	K8x11x8FV	8	11	8	3.23	3.11	26000	41000	8.000	7.994	11.017	11.006	0.002
	K8x11x8TN	8	11	8	2.34	2.05	26000	41000	8.000	7.994	11.017	11.006	0.001
	K8x11x10H	8	11	10	4.57	4.89	26000	41000	8.000	7.994	11.017	11.006	0.002
	K8x11x10FV	8	11	10	4.01	4.11	26000	41000	8.000	7.994	11.017	11.006	0.002
	K8x11x10TN	8	11	10	3.84	3.91	26000	41000	8.000	7.994	11.017	11.006	0.001
	K8x11x13TN	8	11	13	5.18	5.75	26000	41000	8.000	7.994	11.017	11.006	0.002
	K8x11x13H	8	11	13	5.22	5.78	26000	41000	8.000	7.994	11.017	11.006	0.003
9	K9x12x10FH	9	12	10	4.27	4.60	26000	40000	9.000	8.994	12.017	12.006	0.003
	K9x12x10FV	9	12	10	4.27	4.60	26000	40000	9.000	8.994	12.017	12.006	0.002
	K9x12x13FH	9	12	13	5.57	6.47	26000	40000	9.000	8.994	12.017	12.006	0.003
	K9x12x13FV	9	12	13	5.57	6.47	26000	40000	9.000	8.994	12.017	12.006	0.003
	K9x13x8H	9	13	8	3.96	3.50	21000	32000	9.000	8.994	13.017	13.006	0.003
10	K10x13x10H	10	13	10	5.40	6.43	25000	39000	10.000	9.994	13.017	13.006	0.002
	K10x13x10TN	10	13	10	4.29	4.77	25000	39000	10.000	9.994	13.017	13.006	0.002
	K10x13x13	10	13	13	5.90	7.16	25000	39000	10.000	9.994	13.017	13.006	0.003
	K10x13x16	10	13	16	7.43	9.64	25000	39000	10.000	9.994	13.017	13.006	0.004
	K10x14x10H	10	14	10	6.12	6.29	20000	31000	10.000	9.994	14.017	14.006	0.003
	K10x14x13H	10	14	13	7.88	8.71	20000	31000	10.000	9.994	14.017	14.006	0.004
	K10x16x12F	10	16	12	8.39	7.47	15000	24000	10.000	9.994	16.017	16.006	0.006
	K10x16x12TN	10	16	12	7.50	6.40	15000	24000	10.000	9.994	16.017	16.006	0.005

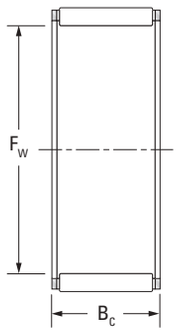

K

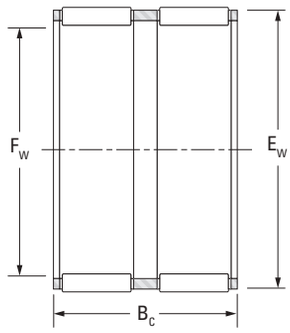

KZW

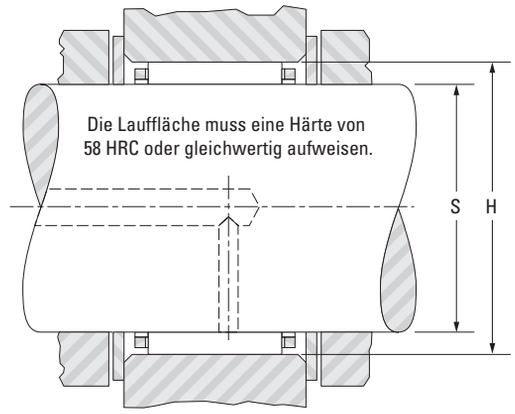

Shaft mm	Designation	F_w mm	E_w mm	B_c -0.20 -0.55 mm	Load ratings kN		Speed rating min^{-1}		S		H		Wt. kg
									Mounting dimensions				
					Dynamic	Static			Max.	Min.	Max.	Min.	
					C	C_0	Grease	Oil	mm	mm	mm	mm	
12	K12x15x10H	12	15	10	5.85	7.51	24000	37000	12.000	11.992	15.017	15.006	0.003
	K12x15x13H	12	15	13	6.78	9.03	24000	37000	12.000	11.992	15.017	15.006	0.004
	K12x16x13H	12	16	13	7.49	8.51	19000	30000	12.000	11.992	16.017	16.006	0.006
	K12x17x13	12	17	13	8.93	9.29	16000	25000	12.000	11.992	17.017	17.006	0.008
	K12x18x12H	12	18	12	9.76	9.40	14000	22000	12.000	11.992	18.017	18.006	0.009
13	K13x17x10	13	17	10	7.22	8.33	19000	29000	13.000	12.992	17.017	17.006	0.004
	K13x18x15F	13	18	15	10.8	12.1	16000	25000	13.000	12.992	18.017	18.006	0.008
14	K14x18x8	14	18	8	5.39	5.82	19000	29000	14.000	13.992	18.017	18.006	0.004
	K14x18x10	14	18	10	7.17	8.41	19000	29000	14.000	13.992	18.017	18.006	0.005
	K14x18x13	14	18	13	9.73	12.5	19000	29000	14.000	13.992	18.017	18.006	0.006
	K14x18x15	14	18	15	10.5	13.8	19000	29000	14.000	13.992	18.017	18.006	0.007
	K14x18x17H	14	18	17	12.4	17.1	19000	29000	14.000	13.992	18.017	18.006	0.008
	K14x19x13H	14	19	13	10.2	11.4	16000	24000	14.000	13.992	19.020	19.007	0.008
	K14x19x18F	14	19	18	13.2	16.0	16000	24000	14.000	13.992	19.020	19.007	0.011
	K14x20x12	14	20	12	10.5	10.6	14000	21000	14.000	13.992	20.020	20.007	0.009
15	K15x18x14T	15	18	14	7.92	11.9	13000	23000	15.000	14.992	18.017	18.006	0.003
	K15x18x16F	15	18	16	8.36	12.6	13000	23000	15.000	14.992	18.017	18.006	0.005
	K15x18x17	15	18	17	8.08	12.1	23000	36000	15.000	14.992	18.017	18.006	0.005
	K15x19x10	15	19	10	7.87	9.69	18000	28000	15.000	14.992	19.020	19.007	0.005
	K15x19x13	15	19	13	9.66	12.6	18000	28000	15.000	14.992	19.020	19.007	0.007
	K15x19x17H	15	19	17	12.3	17.2	18000	28000	15.000	14.992	19.020	19.007	0.009
	K15x19x22ZW	15	19	22	12.2	17.0	18000	28000	15.000	14.992	19.020	19.007	0.010
	K15x20x13H	15	20	13	9.93	11.3	16000	24000	15.000	14.992	20.020	20.007	0.008
	K15x21x15	15	21	15	13.4	14.8	14000	21000	15.000	14.992	21.020	21.007	0.013
	K15x21x21H	15	21	21	18.0	21.7	14000	21000	15.000	14.992	21.020	21.007	0.018

RADIAL NEEDLE ROLLER AND CAGE ASSEMBLIES
SINGLE-ROW, DOUBLE-ROW ASSEMBLIES

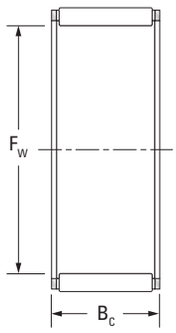

K

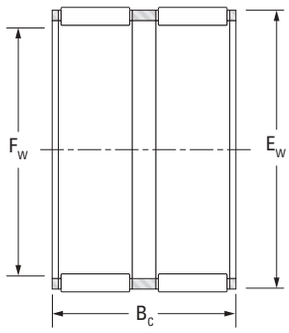

KZW

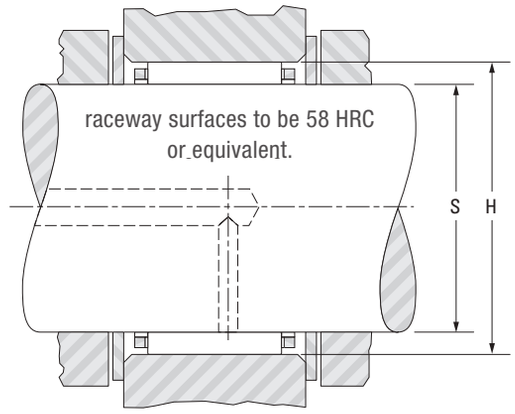

Shaft mm	Designation	F_w mm	E_w mm	B_c -0.20 -0.55 mm	Load ratings kN		Speed rating min^{-1}		S		H		Wt. kg
									Mounting dimensions				
					Dynamic	Static			Max.	Min.	Max.	Min.	
					C	C_0	Grease	Oil	mm	mm	mm	mm	
16	K16x20x8F	16	20	8	6.37	7.51	18000	28000	16.000	15.992	20.020	20.007	0.005
	K16x20x10H	16	20	10	7.82	9.76	18000	28000	16.000	15.992	20.020	20.007	0.006
	K16x20x13	16	20	13	10.1	13.5	18000	28000	16.000	15.992	20.020	20.007	0.007
	K16x20x14	16	20	14	10.8	1408	18000	28000	16.000	15.992	20.020	20.007	0.007
	K16x20x17H	16	20	17	12.9	18.5	18000	28000	16.000	15.992	20.020	20.007	0.008
	K16x20x20	16	20	20	13.4	19.5	18000	28000	16.000	15.992	20.020	20.007	0.011
	K16x22x12	16	22	12	11.2	11.9	19000	29000	16.000	15.992	22.020	22.007	0.010
	K16x22x16H	16	22	16	14.9	17.2	19000	29000	16.000	15.992	22.020	22.007	0.014
	K16x22x20	16	22	20	18.6	22.9	19000	29000	16.000	15.992	22.020	22.007	0.017
	K16x24x20	16	24	20	20.2	21.4	20000	30000	16.000	15.992	24.020	24.007	0.025
17	K17x20x10	17	20	10	5.96	8.53	16000	25000	17.000	16.992	20.020	20.007	0.004
	K17x21x10	17	21	10	8.12	10.4	17000	26000	17.000	16.992	21.020	21.007	0.006
	K17x21x13H	17	21	12.8	10.5	14.5	17000	26000	17.000	16.992	21.020	21.007	0.008
	K17x21x15	17	21	15	11.4	16.1	17000	26000	17.000	16.992	21.020	21.007	0.008
	K17x21x17H	17	21	17	13.4	19.8	17000	26000	17.000	16.992	21.020	21.007	0.011
	K17x22x20FH	17	22	20	17.0	23.3	17000	27000	17.000	16.992	22.020	22.007	0.015
	K17x23x15F	17	23	15	14.1	16.3	18000	27000	17.000	16.992	23.020	23.007	0.010
18	K18x22x8F	18	22	8	6.32	7.70	16000	24000	18.000	17.992	22.020	22.007	0.005
	K18x22x10H	18	22	10	8.41	11.1	16000	24000	18.000	17.992	22.020	22.007	0.006
	K18x22x13H	18	22	13	10.8	15.4	16000	24000	18.000	17.992	22.020	22.007	0.008
	K18x22x14	18	22	14	11.6	16.8	16000	24000	18.000	17.992	22.020	22.007	0.009
	K18x22x14FV	18	22	14	11.3	16.3	16000	24000	18.000	17.992	22.020	22.007	0.009
	K18x22x17H	18	22	17	13.3	19.9	16000	24000	18.000	17.992	22.020	22.007	0.009
	K18x22x20F	18	22	20	15.0	23.4	16000	24000	18.000	17.992	22.020	22.007	0.011
	K18x24x12	18	22	12	11.8	13.1	17000	25000	18.000	17.992	24.020	24.007	0.011
	K18x24x20H	18	24	20	19.4	24.9	16000	25000	18.000	17.992	24.020	24.007	0.019
	K18x25x22H	18	25	22	23.3	28.6	17000	26000	18.000	17.992	25.020	25.007	0.025
	K18x26x12FV	18	26	12	13.8	13.5	11000	17000	18.000	17.992	26.020	26.007	0.020
	K18x26x20F	18	26	20	21.7	24.1	17000	26000	18.000	17.992	26.020	26.007	0.027

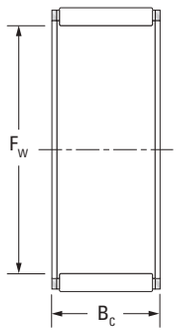

K

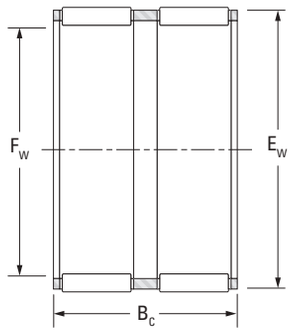

KZW

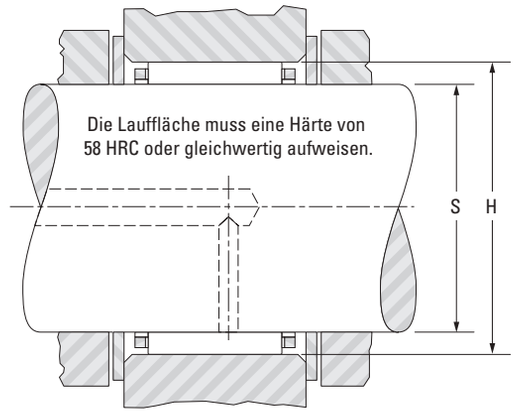

Shaft mm	Designation	F_w mm	E_w mm	B_c -0.20 -0.55 mm	Load ratings kN		Speed rating min^{-1}		S		H		Wt. kg
									Mounting dimensions				
					Dynamic	Static			Max. mm	Min. mm	Max. mm	Min. mm	
					C	C_0	Grease	Oil					
19	K19x23x13	19	23	13	10.8	15.5	15000	23000	19.000	18.991	23.020	23.007	0.008
	K19x23x17	19	23	17	13.4	20.6	15000	23000	19.000	18.991	23.020	23.007	0.011
20	K20x24x8F	20	24	8	7.31	9.60	14000	22000	20.000	19.991	24.020	24.007	0.005
	K20x24x10H	20	24	10	8.97	12.5	14000	22000	20.000	19.991	24.020	24.007	0.0%
	K20x24x12	20	24	12	10.7	15.7	14000	22000	20.000	19.991	24.020	24.007	0.008
	K20x24x13H	20	24	13	11.5	17.3	14000	22000	20.000	19.991	24.020	24.007	0.009
	K20x24x14	20	24	14	12.4	18.9	14000	22000	20.000	19.991	24.020	24.007	0.009
	K20x24x17H	20	24	17	14.8	23.7	14000	22000	20.000	19.991	24.020	24.007	0.011
	K20x26x12	20	26	12	13.0	15.3	15000	23000	20.000	19.991	26.020	26.007	0.012
	K20x26)x13H	20	26	13	13.4	15.9	15000	23000	20.000	19.991	26.020	26.007	0.014
	K20x26x17H	20	26	17	19.3	25.5	15000	23000	20.000	19.991	26.020	26.007	0.017
	K20x26x20	20	26	20	20.3	27.2	15000	23000	20.000	19.991	26.020	26.007	0.020
	K20x28x20H	20	28	20	24.6	29.0	15000	23000	20.000	19.991	28.020	28.007	0.028
	K20x28x25H	20	28	25	29.7	37.0	15000	23000	20.000	19.991	28.020	28.007	0.036
	K20x30x30H	20	30	30	38.9	45.8	16000	24000	20.000	19.991	30.020	30.007	0.055
	K20x32x36H	20	32	36	49.9	57.0	16000	25000	20.000	19.991	32.025	32.009	0.082
21	K21x25x17H	21	25	17	14.3	23.1	14000	21000	21.000	20.991	25.020	25.007	0.013
22	K22x26x10H	22	26	10	9.81	14.5	13000	20000	22.000	21.991	26.020	26.007	0.007
	K22x26x13H	22	26	13	11.8	18.3	13000	20000	22.000	21.991	26.020	26.007	0.012
	K22x26x17H	22	26	17	15.6	26.3	13000	20000	22.000	21.991	26.020	26.007	0.012
	K22x26x18H	22	26	18	15.3	25.5	13000	20000	22.000	21.991	26.020	26.007	0.017
	K22x28x13	22	28	13	13.9	17.1	13000	20000	22.000	21.991	28.020	28.007	0.015
	K22x28x17H	22	28	17	18.2	24.2	13000	20000	22.000	21.991	28.020	28.007	0.020
	K22x30x15H	22	30	15	19.7	22.3	14000	21000	22.000	21.991	30.020	30.007	0.023
	K22x30x20FV	22	30	20	24.4	29.4	14000	21000	22.000	21.991	30.020	30.007	0.031
	K22x32x24F	22	32	24	33.1	37.9	14000	22000	22.000	21.991	32.025	32.009	0.046
	K22x32x30H	22	32	30	41.8	51.3	14000	22000	22.000	21.991	32.025	32.009	0.057

RADIAL NEEDLE ROLLER AND CAGE ASSEMBLIES
SINGLE-ROW, DOUBLE-ROW ASSEMBLIES

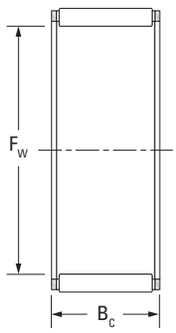

K

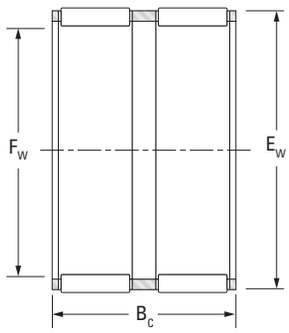

KZW

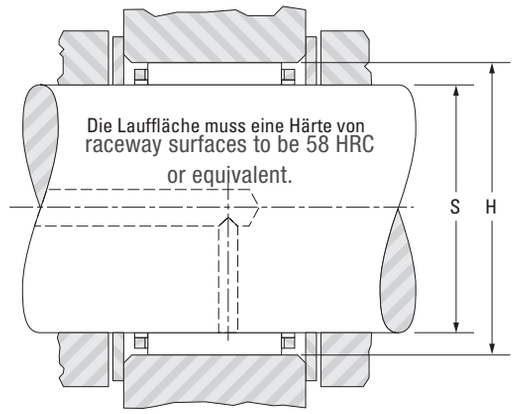

Shaft mm	Designation	F_w mm	E_w mm	B_c -0.20 -0.55 mm	Load ratings kN		Speed rating min^{-1}		S		H		Wt. kg
									Mounting dimensions				
					Dynamic	Static			Max.	Min.	Max.	Min.	
					C	C_0	Grease	Oil	mm	mm	mm	mm	
23	K23x28x24F	23	28	24	22.4	36.2	12000	19000	23.000	22.991	28.020	28.007	0.023
	K23x35x16H	23	35	16	25.9	25.1	14000	21000	23.000	22.991	35.025	35.009	0.040
24	K24x28x10H	24	28	10	9.67	14.6	12000	18000	24.000	23.991	28.020	28.007	0.027
	K24x28x13H	24	28	13	12.5	20.2	12000	18000	24.000	23.991	28.020	28.007	0.010
	K24x28x16F	24	28	16	12.6	20.4	12000	18000	24.000	23.991	28.020	28.007	0.012
	K24x28x17H	24	28	17	15.4	26.4	12000	18000	24.000	23.991	28.020	28.007	0.013
	K24x30x10TN	24	30	10	11.3	13.5	12000	19000	24.000	23.991	30.020	30.007	0.008
	K24x30x17H	24	30	17	19.8	27.7	12000	19000	24.000	23.991	30.020	30.007	0.020
	K24x30x22	24	30	22	25.0	37.3	12000	19000	24.000	23.991	30.020	30.007	0.024
	K24x36x23H	24	36	23	37.1	40.1	13000	20000	24.000	23.991	36.025	36.009	0.070
25	K25x29x10H	25	29	10	9.61	14.6	11000	17000	25.000	24.991	29.020	29.007	0.008
	K25x29x13H	25	29	13	12.8	21.1	11000	17000	25.000	24.991	29.020	29.007	0.010
	K25x29x17H	25	29	17	15.1	26.2	11000	17000	25.000	24.991	29.020	29.007	0.016
	K25x30x13	25	30	13	14.6	21.4	11000	17000	25.000	24.991	30.020	30.007	0.012
	K25x30x17H	25	30	17	18.8	29.8	11000	17000	25.000	24.991	30.020	30.007	0.016
	K25x30x18	25	30	18	20.6	33.4	11000	17000	25.000	24.991	30.020	30.007	0.017
	K25x30x20H	25	30	20	21.9	36.1	11000	17000	25.000	24.991	30.020	30.007	0.019
	K25x30x24H	25	30	24	24.8	42.4	11000	17000	25.000	24.991	30.020	30.007	0.024
	K25x30x26ZW	25	30	26	23.0	38.6	11000	17000	25.000	24.991	30.020	30.007	0.027
	K25x31x14H	25	31	14	16.8	22.7	12000	18000	25.000	24.991	31.025	31.009	0.017
	K25x31x17H	25	31	17	19.7	27.8	12000	18000	25.000	24.991	31.025	31.009	0.020
	K25x31x21H	25	31	21	25.1	38.0	12000	18000	25.000	24.991	31.025	31.009	0.026
	K25x31x24H	25	31	24	25.3	38.5	12000	18000	25.000	24.991	31.025	31.009	0.031
	K25x32x16	25	32	16	19.8	25.3	12000	18000	25.000	24.991	32.025	32.009	0.027
	K25x33x20H	25	33	20	28.8	37.6	12000	18000	25.000	24.991	33.025	33.009	0.035
	K25x33x24H	25	33	24	32.3	43.5	12000	18000	25.000	24.991	33.025	33.009	0.038
	K25x33x25H	25	33	25	33.0	44.6	12000	18000	25.000	24.991	33.025	33.009	0.041
	K25x35x23,7H	25	35	23.7	35.9	42.3	12000	19000	25.000	24.991	35.025	35.009	0.050
	K25x35x25H	25	35	25	37.8	46.2	12000	19000	25.000	24.991	35.025	35.009	0.054
	K25x35x30H	25	35	30	44.6	57.2	12000	19000	25.000	24.991	35.025	35.009	0.060
	K25x35x36H	25	35	36	52.4	70.4	12000	19000	25.000	24.991	35.025	35.009	0.074
	K25x37x20H	25	37	20	32.5	34.1	12000	19000	25.000	24.991	37.025	37.009	0.055

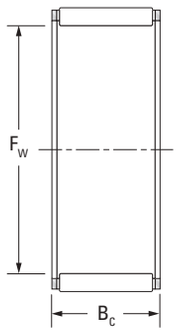

K

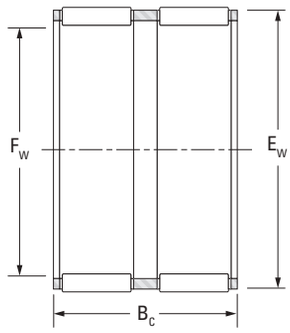

KZW

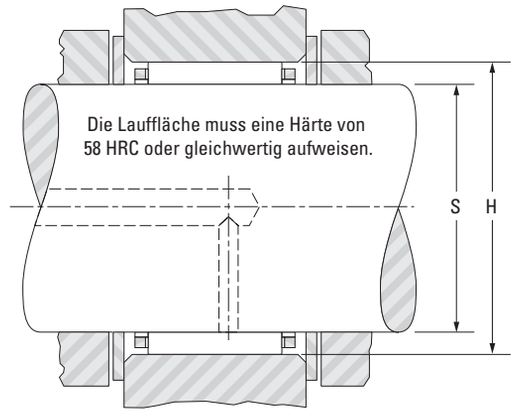

Shaft mm	Designation	F_w mm	E_w mm	B_c -0.20 -0.55 mm	Load ratings kN		Speed rating min^{-1}		S		H		Wt. kg
									Mounting dimensions				
					Dynamic	Static			Max.	Min.	Max.	Min.	
					C	C_0	Grease	Oil	mm	mm	mm	mm	
26	K26x30x10F	26	30	10	9.46	14.5	11000	16000	26.000	25.991	30.020	30.007	0.007
	K26x30x13	26	30	13	12.3	20.4	10000	16000	26.000	25.991	30.007	0.011	0.011
	K26x30x17	26	30	17	15.0	26.3	10000	16000	26.000	25.991	30.007	0.014	0.014
	K26x30x22ZW	26	30	22	16.7	30.2	10000	16000	26.000	25.991	30.007	0.018	0.018
28	K28x32x21F	28	32	21	18.7	35.7	9900	15000	28.000	27.991	32.009	0.018	0.018
	K28x33x13F	28	33	13	14.1	21.4	10000	15000	28.000	27.991	33.009	0.015	0.015
	K28x33x17H	28	33	17	19.8	33.0	10000	15000	28.000	27.991	33.009	0.018	0.015
	K28x33x27	28	33	27	29.0	53.8	10000	15000	28.000	27.991	33.009	0.027	0.018
	K28x34x17	28	34	17	21.1	31.5	10000	16000	28.000	27.991	34.009	0.022	0.027
	K28x34x20H	28	34	20	24.4	37.8	10000	16000	28.000	27.991	34.009	0.025	0.022
	K28x35x15H	28	35	15	19.5	25.6	10000	16000	28.000	27.991	35.009	0.025	0.025
	K28x35x16H	28	35	16	21.5	29.1	10000	16000	28.000	27.991	35.009	0.026	0.025
	K28x35x27H	28	35	27	35.2	54.7	10000	16000	28.000	27.991	35.009	0.042	0.042
	K28x36x20FV	28	36	20	27.8	37.0	10000	16000	28.000	27.991	36.009	0.039	0.039
	K28x38x25,5	28	38	25	40.9	52.7	11000	16000	28.000	27.991	38.009	0.059	0.059
	K28x40x18H	28	40	18	33.6	36.5	11000	17000	28.000	27.991	40.009	0.060	0.060
	K28x40x25H	28	40	25	45.5	54.0	11000	17000	28.000	27.991	40.009	0.072	0.072
	K28x40x30H	28	40	30	54.3	67.8	11000	17000	28.000	27.991	40.009	0.100	0.100
	K28x41x25H	28	41	25	49.2	57.1	11000	17000	28.000	27.991	41.009	0.082	0.082
29	K29x34x27F	29	34	27	28.9	54.0	9700	15000	29.000	28.991	34.009	0.033	0.033
30	K30x34x13	30	34	13	13.5	24.1	9200	14000	30.000	29.991	34.009	0.011	0.011
	K30x35x13H	30	35	13	15.6	24.9	9300	14000	30.000	29.991	35.009	0.017	0.017
	K30x35x17H	30	35	17	20.2	34.6	9300	14000	30.000	29.991	35.009	0.022	0.022
	K30x35x20H	30	35	20	23.5	41.9	9300	14000	30.000	29.991	35.009	0.023	0.023
	K30x35x23F	30	35	22.8	25.6	46.8	9300	14000	30.000	29.991	35.009	0.028	0.028
	K30x35x27H	30	35	27	30.6	59.0	9300	14000	30.000	29.991	35.009	0.032	0.032
	K30x35x27HZW	30	35	27	19.9	33.6	9300	14000	30.000	29.991	35.009	0.033	0.033
	K30x36x14	30	36	14	18.0	26.2	9500	15000	30.000	29.991	36.009	0.020	0.020

RADIAL NEEDLE ROLLER AND CAGE ASSEMBLIES
SINGLE-ROW, DOUBLE-ROW ASSEMBLIES

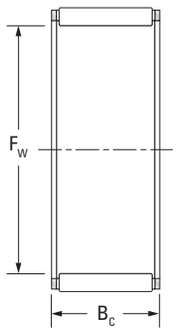

K

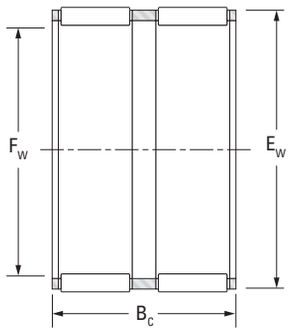

KZW

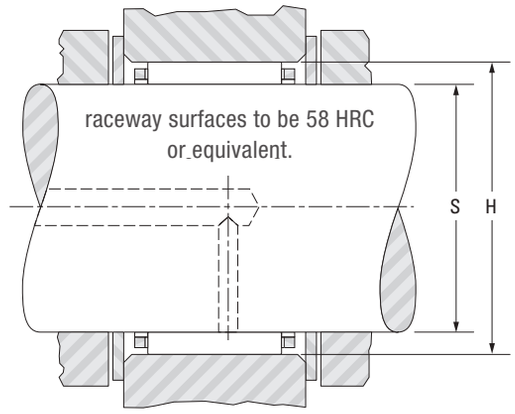

Shaft mm	Designation	F_w mm	E_w mm	B_c -0.20 -0.55 mm	Load ratings kN		Speed rating min^{-1}		S		H		Wt. kg
									Mounting dimensions				
					Dynamic	Static			Max. mm	Min. mm	Max. mm	Min. mm	
					C	C_0	Grease	Oil					
30	K30x37)(18	30	37	17.8	24.3	34.8	9600	15000	30.000	29.991	37.025	37.009	
	K30x40x30H	30	40	30	49.2	67.8	9900	15000	30.000	29.991	40.025	40.009	0.077
	K30x42x30H	30	42	30	54.2	68.6	10000	16000	30.000	29.991	42.025	42.009	0.096
	K30x44x26H	30	44	26	52.4	59.9	10000	16000	30.000	29.991	44.025	44.009	0.095
32	K32x36x15F	32	36	15	11.6	20.2	8600	13000	32.000	31.989	36.025	36.009	0.015
	K32x37x13	32	37	13	15.2	24.4	8700	13000	32.000	31.989	37.025	37.009	0.018
	K32x37x17H	32	37	17	20.0	34.8	8700	13000	32.000	31.989	37.025	37.009	0.020
	K32x37x27	32	37	27	29.3	56.8	8700	13000	32.000	31.989	37.025	37.009	0.035
	K32x38x20H	32	38	20	27.3	45.7	8800	14000	32.000	31.989	38.025	38.009	0.030
	K32x38x26H	32	38	26	33.2	58.8	8800	14000	32.000	31.989	38.025	38.009	0.037
	K32x39x16H	32	39	16	23.0	33.0	8900	14000	32.000	31.989	39.025	39.009	0.030
	K32x39x18H	32	39	18	25.8	38.2	8900	14000	32.000	31.989	39.025	39.009	0.033
	K32x40x25H	32	40	25	37.9	57.2	9000	14000	32.000	31.989	40.025	40.009	0.052
	K32x40x36H	32	40	36	52.3	86.4	9000	14.000	32.000	31.989	40.025	40.009	0.080
	K32x42x42H	32	42	42	69.2	108	9200	14.000	32.000	31.989	42.025	42.009	0.110
	K32x46x18H	32	46	18	39.2	41.9	9600	15000	32.000	31.989	46.025	46.009	0.075
	K32x46x32H	32	46	32	67.0	83.4	9600	15.000	32.000	31.989	46.025	46.009	0.140
	K32x46x40H	32	46	40	81.7	108	9600	15.000	32.000	31.989	46.025	46.009	0.158
33	K33x51x23H	33	51	23	55.9	57.6	9600	15.000	33.000	32.989	51.029	51.010	0.140
34	K34x38x11	34	38	11	12.2	21.9	8100	12.000	34.000	33.989	38.025	38.009	0.011
	K34x44x26FH	34	44	26	42.9	58.9	8600	13.000	34.000	33.989	44.025	44.009	0.080
35	K35x40x13H	35	40	13	16.2	27.2	7900	12.000	35.000	34.989	40.025	40.009	0.018
	K35x40x17H	35	40	17	22.1	40.8	7900	12.000	35.000	34.989	40.025	40.009	0.025
	K35x40x19F	35	40	19	23.2	43.2	7900	12.000	35.000	34.989	40.025	40.009	0.025
	K35x40x19H	35	40	19	23.2	43.2	7900	12.000	35.000	34.989	40.025	40.009	0.025
	K35x40x25H	35	40	25	28.4	56.2	7900	12.000	35.000	34.989	40.025	40.009	0.035
	K35x40x27H	35	40	27	29.8	59.6	7900	12.000	35.000	34.989	40.025	40.009	0.037
	K35x42x16H	35	42	16	24.5	36.8	8100	12.000	35.000	34.989	42.025	42.009	0.032
	K35x42x18	35	42	18	27.5	42.6	8100	12.000	35.000	34.989	42.025	42.009	0.035

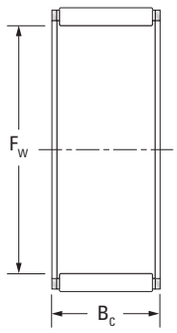

K

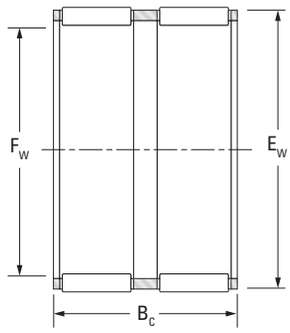

KZW

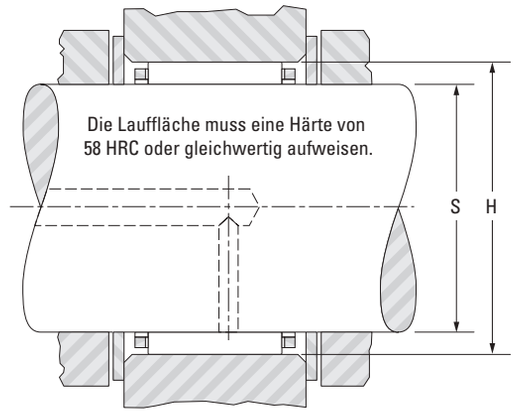

Shaft mm	Designation	F_w mm	E_w mm	B_c -0.20 -0.55 mm	Load ratings kN		Speed rating min^{-1}		S		H		Wt. kg
									Mounting dimensions				
					Dynamic	Static			Max.	Min.	Max.	Min.	
					C	C_0	Grease	Oil	mm	mm	mm	mm	
35	K35x42x20H	35	42	20	30.4	48.5	8.100	12.000	35.000	34.989	42.025	42.009	0.037
	K35x42x30FH	35	42	30	40.5	70.0	8.100	12.000	35.000	34.989	42.025	42.009	0.061
	K35x45x20FH	35	45	20	36.5	49.9	8.400	13.000	35.000	34.989	45.025	45.009	0.059
	K35x45x30F	35	45	30	51.2	74.5	8400	13000	35.000	34.989	45.025	45.009	0.100
	K35x45x35H	35	45	35	62.1	95.5	8.400	13.000	35.000	34.989	45.025	45.009	0.085
	K35x45x41	35	45	41	70.8	113	8.400	13.000	35.000	34.989	45.025	45.009	0.120
	K35x45x49H	35	45	49	82.5	138	8.400	13.000	35.000	34.989	45.025	45.009	0.143
	K35x45x49H2W	35	45	49	71.8	115	8.400	13.000	35.000	34.989	45.025	45.009	0.143
	K35x50x40F	35	50	40	79.7	102	8.700	13.000	35.000	34.989	50.025	50.009	0.200
36	K36x40x29TN	36	40	29	21.2	45.2	7.600	12.000	36.000	35.989	40.025	40.009	0.029
	K36x42x16	36	42	16	22.8	37.7	7.800	12.000	36.000	35.989	42.025	42.009	0.027
37	K37x42x13H	37	42	13	16.9	29.4	7.500	11.000	37.000	36.989	42.025	42.009	0.017
	K37x42x17H	37	42	17	21.9	41.0	7.500	11.000	37.000	36.989	42.025	42.009	0.025
	K37x42x27F	37	42	27	32.1	66.9	7.500	11.000	37.000	36.989	42.025	42.009	0.039
	K37x44x19H	37	44	19	29.7	48.0	7.600	12.000	37.000	36.989	44.025	44.009	0.039
38	K38x41x9TN	38	41	9	5.93	11.0	7.100	11.000	38.000	37.989	41.025	41.009	0.004
	K38x43x17H	38	43	17	21.8	41.0	7.300	11.000	38.000	37.989	43.025	43.009	0.032
	K38x43x27	38	43	27	31.9	67.0	7.300	11.000	38.000	37.989	43.025	43.009	0.041
	K38x46x20H	38	46	19.8	33.3	51.0	7.500	12.000	38.000	37.989	46.025	46.009	0.055
	K38x46x32H	38	46	32	55.2	98.1	7.500	12.000	38.000	37.989	46.025	46.009	0.090
	K38x50x25	38	50	25	53.0	70.8	7.800	12.000	38.000	37.989	50.025	50.009	0.100
	K38x50x33H	38	50	33	68.3	98.2	7.800	12.000	38.000	37.989	50.025	50.009	0.126
	K38x50x40FH	38	50	40	76.2	113	7.800	12.000	38.000	37.989	50.025	50.009	0.170
40	K40x45x13H	40	45	13	17.6	31.7	6.900	11.000	40.000	39.989	45.025	45.009	0.022
	K40x45x18H	40	45	18	25.1	50.4	6.900	11.000	40.000	39.989	45.025	45.009	0.031
	K40x45x21H	40	45	21	23.3	45.2	6.900	11.000	40.000	39.989	45.025	45.009	0.033
	K40x45x27H	40	45	27	32.7	70.2	6.900	11.000	40.000	39.989	45.025	45.009	0.040
	K40x45x27TN	40	45	27	33.3	72.1	6.900	11.000	40.000	39.989	45.025	45.009	0.030
	K40x45x29H	40	45	29	34.7	75.9	6.900	11.000	40.000	39.989	45.025	45.009	0.050

RADIAL NEEDLE ROLLER AND CAGE ASSEMBLIES
SINGLE-ROW, DOUBLE-ROW ASSEMBLIES

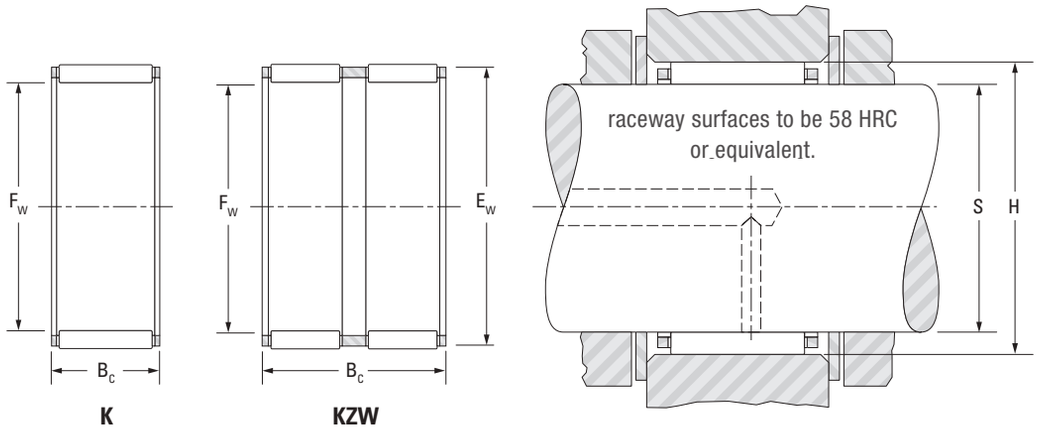

Shaft mm	Designation	F_w mm	E_w mm	B_c -0.20 -0.55 mm	Load ratings kN		Speed rating min^{-1}		S		H		Wt. kg
									Mounting dimensions				
					Dynamic	Static			Max.	Min.	Max.	Min.	
					C	C_0	Grease	Oil	mm	mm	mm	mm	
40	K40x46x17	40	46	17	25.2	44.0	7000	11000	40.000	39.989	46.025	46.009	0.033
	K40x47x18	40	47	18	28.0	45.6	7000	11000	40.000	39.989	47.025	47.009	0.041
	K40x47x20	40	47	20	31.1	52.1	7000	11000	40.000	39.989	47.025	47.009	0.042
	K40x48x20FV1	40	4 B	20	35.5	56.3	7100	11000	40.000	39.989	48.025	48.009	0.052
	K40x48x20H	40	48	20	35.5	56.3	7100	11000	40.000	39.989	48.025	48.009	0.050
	K40x48x35H	40	48	35	57.3	104	7100	11000	40.000	39.989	48.025	48.009	0.098
	K40x50x27H	40	50	27	53.0	81.0	7200	11000	40.000	39.989	50.025	50.009	0.084
	K40x55x45H	40	55	45	103	146	7500	12000	40.000	39.989	55.029	55.010	0.221
	K40x56x26H	40	56	26	63.7	75.7	7600	12000	40.000	39.989	56.029	56.010	0.0138
41	K41x48x31HZW	41	48	31	38.0	68.1	6800	11000	41.000	40.989	48.025	48.009	0.067
42	K42x47x13H	42	47	13	18.7	34.9	6500	10000	42.000	41.989	47.025	47.009	0.027
	K42x47x17H	42	47	17	22.8	45.2	6500	10000	42.000	41.989	47.025	47.009	0.028
	K42x47x27H	42	47	27	33.8	74.7	6500	10000	42.000	41.989	47.225	47.009	0.041
	k42x48x24F	42	48	24	33.1	63.9	6600	10000	42.000	41.989	48.025	48.009	0.046
	k42x50x13H	42	50	13	20.9	28.9	6700	10000	42.000	41.989	50.325	50.009	0.035
	K42x50x20H	42	50	20	35.2	56.6	6700	10000	42.000	41.989	50.225	50.009	0.054
	K42x50x30H	42	50	30	51.3	91.9	6700	10000	42.000	41.989	50.025	50.009	0.080
43	K43x48x17FH	43	48	17	23.0	45.8	6400	9800	43.000	42.989	48.025	48.009	0.036
	K43x48x27H	43	48	27	34.8	78.0	6400	9800	43.000	42.989	48.025	48.009	0.050
44	K44x50x22H	44	50	22	31.6	60.6	6400	9900	44.000	43.989	50.025	50.009	0.046
	K44x50x30,5HZW	44	50	30	35.5	70.5	6400	9900	44.000	43.989	50.325	50.009	0.068
45	K45x50x13H	45	50	13	18.4	35.1	6100	9400	45.000	44.989	50.025	50.009	0.022
	K45x50x15H	45	50	15	19.4	37.3	6100	9400	45.000	44.989	50.025	50.009	0.028
	K45x50x17H	45	50	17	24.9	51.8	6100	9400	45.000	44.989	50.025	50.009	0.030
	K45x50x20F	45	50	20	27.0	57.4	6100	9400	45.000	44.989	50.025	50.009	0.040
	K45x50x21CH	45	50	21	24.6	50.4	6100	9400	45.000	44.989	50.025	50.009	0.036
	K45x50x27FH	45	50	27	34.2	77.4	6100	9400	45.000	44.989	50.025	50.009	0.043
	K45x50x27	45	50	27	31.8	70.7	6100	9400	45.000	44.989	50.025	50.009	0.048
	K45x52x18H	45	52	18	30.1	52.0	6200	9500	45.000	44.989	52.029	52.010	0.045

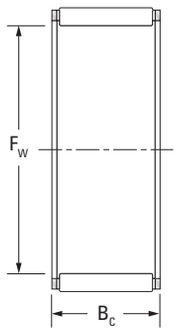

K

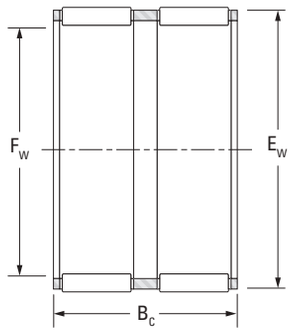

KZW

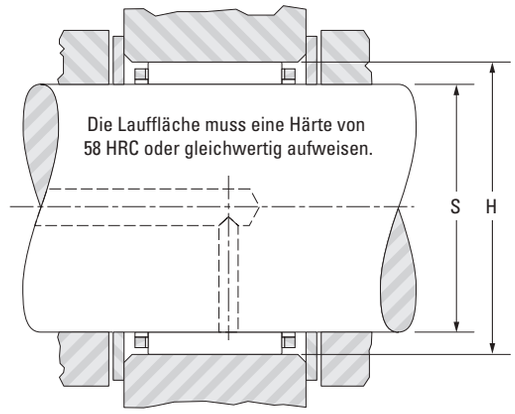

Shaft mm	Designation	F_w mm	E_w mm	B_c -0.20 -0.55 mm	Load ratings kN		Speed rating min^{-1}		S		H		Wt. kg
									Mounting dimensions				
					Dynamic	Static			Max. mm	Min. mm	Max. mm	Min. mm	
					C	C_0	Grease	Oil					
45	K45x52x21F	45	52	21	35.0	63.2	6200	9500	45.000	44.989	52.029	52.010	0.055
	K45x53x20H	45	53	20	36.0	59.5	6200	9600	45.000	44.989	53.029	53.010	0.054
	K45x53x25H	45	53	24.8	45.9	81.5	6200	9600	45.000	44.989	53.029	53.010	0.072
	K45x53x25F	45	53	25	42.5	73.7	6200	9600	45.000	44.989	53.029	53.010	0.075
	K45x53x28H	45	53	28	49.3	89.2	6200	9600	45.000	44.989	53.029	53.010	0.078
	K45x55x20H	45	55	20	42.0	62.2	6400	9800	45.000	44.989	55.029	55.010	0.074
	K45x59x18H	45	59	18	47.8	58.9	6600	10000	45.000	44.989	59.029	59.010	0.107
	K45x59x18TN	45	59	18	45.7	55.4	6600	10000	45.000	44.989	59.029	59.010	0.097
	K45x59x36H	45	59	36	82.4	118	6600	10000	45.000	44.989	59.029	59.010	0.181
	K45x60x30H	45	60	30	75.5	101	6600	10000	45.000	44.989	60.029	60.010	0.171
	K45x60x45H	45	60	45	108	160	6600	10000	45.000	44.989	60.029	60.010	0.280
46	K46x53x36HZW	46	53	36	48.6	96.7	6100	9300	46.000	45.989	53.029	53.010	0.100
47	K47x52x15FH	47	52	15	20.1	39.8	5800	8900	47.000	46.989	52.029	52.010	0.030
	K47x52x17H	47	52	17	24.2	50.4	5800	8900	47.000	46.989	52.029	52.010	0.032
	K47x52x27H	47	52	27	36.6	85.9	5800	8900	47.000	46.989	52.029	52.010	0.045
	K47x55x28FV1	47	55	28	48.9	89.5	6000	9200	47.000	46.989	55.029	55.010	0.092
48	K48x53x17H	48	53	17	25.7	54.9	5700	8700	48.000	47.989	53.029	53.010	0.032
	K48x54x19H	48	54	19	30.9	61.2	5700	8800	48.000	47.989	54.029	54.010	0.042
49	K49x55x32HZW	49	55	32	40.2	86.4	5600	8600	49.000	48.989	55.029	55.010	0.080
	K49x65x38H	49	65	38	100	142	6100	9300	49.000	48.989	65.029	65.010	0.244
50	K50x55x17H	50	55	17	25.5	55.0	5400	8400	50.000	49.989	55.029	55.010	0.032
	K50x55x20H	50	55	20	30.2	68.5	5400	8400	50.000	49.989	55.029	55.010	0.038
	K50x55x30	50	55	30	38.2	92.4	5400	8400	50.000	49.989	55.029	55.010	0.057
	K50x55x30FV1	50	55	30	38.2	92.4	5400	8400	50.000	49.989	55.029	55.010	0.057
	K50x56x23	50	56	23	35.5	74.1	5500	8500	50.000	49.989	56.029	56.010	0.051
	K50x57x18FH	50	57	18	31.3	56.4	5500	8500	50.000	49.989	57.029	57.010	0.050
	K50x58x20H	50	58	20	38.8	67.8	5600	8600	50.000	49.989	58.029	58.010	0.065
	K50x58x25H	50	58	25	46.5	85.6	5600	8600	50.000	49.989	58.029	58.010	0.081

RADIAL NEEDLE ROLLER AND CAGE ASSEMBLIES
SINGLE-ROW, DOUBLE-ROW ASSEMBLIES

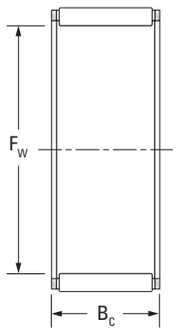

K

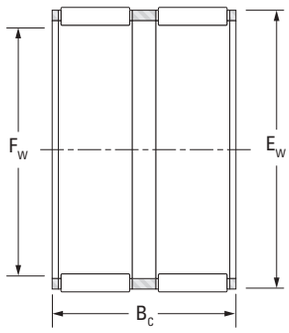

KZW

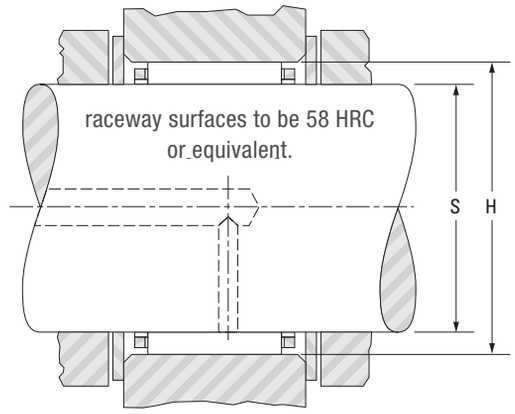

Shaft mm	Designation	F_w mm	E_w mm	B_c -0.20 -0.55 mm	Load ratings kN		Speed rating min^{-1}		S		H		Wt. kg
									Mounting dimensions				
					Dynamic	Static			Max.	Min.	Max.	Min.	
					C	C_0	Grease	Oil	mm	mm	mm	mm	
50	K50x58x35H	50	58	35	64.9	131	5600	8600	50.000	49.989	58.029	58.010	0.105
	K50x62x30H	50	62	30	64.6	98.1	5800	8900	50.000	49.989	62.029	62.010	0.136
	K50x55x30	50	55	30	38.2	92.4	5400	8400	50.000	49.989	55.029	55.010	0.057
	K50x66x30H	50	66	30	80.9	109	5900	9100	50.000	49.989	66.029	66.010	0.192
	K50x70x32H	50	70	32	103	129	6100	9300	50.000	49.989	70.029	70.010	0.224
52	K52x57x12	52	57	12	18.4	36.7	5200	8000	52.000	51.987	57.029	57.010	0.022
	K52x57x17H	52	57	17	21.4	44.3	5200	8000	52.000	51.987	57.029	57.010	0.035
	K52x60x24	52	60	24	47.1	88.3	5400	8200	52.000	51.987	60.029	60.010	0.078
55	K55x60x17	55	60	17	26.0	58.3	4900	7600	55.000	54.987	60.029	60.010	0.037
	K55x60x20H	55	60	20	30.7	72.4	4900	7600	55.000	54.987	60.029	60.010	0.042
	K55x60x27H	55	60	27	40.1	102	4900	7600	55.000	54.987	60.029	60.010	0.055
	K55x60x30FH	55	60	30	40.6	103	4900	7600	55.000	54.987	60.029	60.010	0.068
	K55x61x26H	55	61	26	44.3	102	5000	7600	55.000	54.987	61.029	61.010	0.063
	K55x62x18H	55	62	18	33.2	62.8	5000	7700	55.000	54.987	62.029	62.010	0.055
	K55x63x15F	55	63	15	30.5	51.5	5000	7800	55.000	54.987	63.029	63.010	0.054
	K55x63x20	55	63	20	40.3	73.5	5000	7800	55.000	54.987	63.029	63.010	0.072
	K55x63x25	55	63	25	49.8	96.5	5000	7800	55.000	54.987	63.029	63.010	0.080
	K55x63x32	55	63	32	62.3	129	5000	7800	55.000	54.987	63.029	63.010	0.108
58	K58x63x17F	58	63	17	27.0	62.6	4700	7200	58.000	57.987	63.029	63.010	0.037
	K58x64x19H	58	64	19	32.9	70.6	4700	7200	58.000	57.987	64.029	64.010	0.037
	K58x65x18H	58	65	18	34.3	67.1	4700	7300	58.000	57.987	65.029	65.010	0.058
60	K60x65x20H	60	65	20	31.9	78.1	4500	6900	60.000	59.987	65.029	65.010	0.046
	K60x65x27FH	60	65	26.8	39.5	103	4500	6900	60.000	59.987	65.029	65.010	0.059
	K60x65x30FH	60	65	29.8	42.9	114	4500	6900	60.000	59.987	65.029	65.010	0.085
	K60x65x30	60	65	30	42.9	114	4500	6900	60.000	59.987	65.029	65.010	0.070
	K60x68x17F	60	68	17	34.2	61.4	4600	7100	60.000	59.987	68.029	68.010	0.066
	K60x68x20H	60	68	20	41.8	79.2	4600	7100	60.000	59.987	68.029	68.010	0.066
	K60x68x23H	60	68	23	49.0	97.2	4600	7100	60.000	59.987	68.029	68.010	0.089
	K60x68x25	60	68	25	51.6	104	4600	7100	60.000	59.987	68.029	68.010	0.091
	K60x68x30ZW	60	68	30	46.4	90.1	4600	7100	60.000	59.987	68.029	68.010	0.119

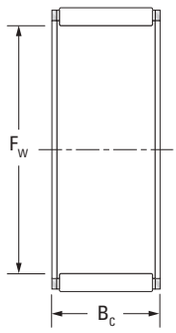

K

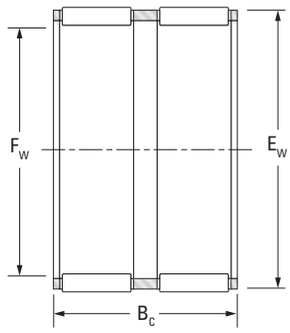

KZW

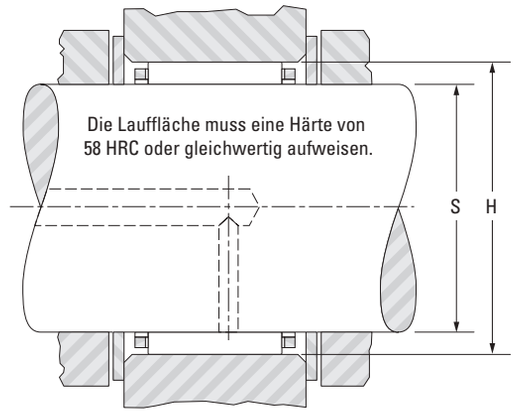

Shaft mm	Designation	F_w mm	E_w mm	B_c -0.20 -0.55 mm	Load ratings kN		Speed rating min^{-1}		S		H		Wt. kg
									Mounting dimensions				
					Dynamic	Static			Max.	Min.	Max.	Min.	
					C	C_0	Grease	Oil	mm	mm	mm	mm	
63	K63x71 x20	63	71	20	41.4	79.4	4400	6700	63.000	62.987	71.029	71.010	0.070
64	K64x70x16	64	70	16	26.4	55.1	4200	6500	64.000	63.987	70.029	70.010	0.049
65	K65x70x20CH	65	70	20	28.6	69.2	4100	6400	65.000	64.987	70.029	70.010	0.050
	K65x70x30	65	70	30	44.4	123	4100	6400	65.000	64.987	70.029	70.010	0.075
	K65x73x23H	65	73	23	48.2	97.7	4200	6500	65.000	64.987	73.029	73.010	0.091
	K65x73x30H	65	73	30	60.1	129	4200	6500	65.000	64.987	73.029	73.010	0.116
68	K68x74x20FH	68	74	20	37.5	88.1	4000	6100	68.000	67.987	74.029	74.010	0.062
	K68x74x28CH	68	74	28	44.8	110	4000	6100	68.000	67.987	74.029	74.010	0.082
	K68x4x30H	68	74	30	47.6	119	4000	6100	68.000	67.987	74.029	74.010	0.098
	K68x74x35HZW	68	74	35	45.1	111	4000	6100	68.000	67.987	74.029	74.010	0.120
	K68x76x20	68	76	20	43.8	87.8	4000	6200	68.000	67.987	76.029	76.010	0.086
	K68x82x38,5H	68	82	38.5	117	209	4200	6400	68.000	67.987	82.034	82.012	0.320
70	K70x76x20	70	76	20	36.1	84.7	3900	5900	70.000	69.987	76.029	76.010	0.065
	K70x76x30	70	76	30	51.6	134.0	3900	5900	70.000	69.987	76.029	76.010	0.097
	K70x78x20H	70	78	20	43.6	87.9	3900	6000	70.000	69.987	78.029	78.010	0.090
	K70x78x23F	70	78	23	49.8	104.0	3900	6000	70.000	69.987	78.029	78.010	0.115
	K70x78x25F	70	78	24.8	49.8	104.0	3900	6000	70.000	69.987	78.029	78.010	0.115
	K70x78x30H	70	78	30	62.2	139.0	3900	6000	70.000	69.987	78.029	78.010	0.140
	K70x78x46ZW	70	78	46	78.4	187.0	3900	6000	70.000	69.987	78.029	78.010	0.188
	K70x85x40F	70	85	40	118	203	4100	6300	70.000	69.987	85.034	85.012	0.338
	K70x88x30H	70	88	30	115	175	4100	6400	70.000	69.987	88.034	88.012	0.205
72	K72x80x20	72	80	20	44.4	90.7	3800	5800	72.000	71.987	80.029	80.010	0.084
73	K73x79x20	73	79	20	37.0	88.7	3700	5700	73.000	72.987	79.029	79.010	0.068
75	K75x81x20F	75	81	20	37.4	90.7	3600	5500	75.000	74.987	81.034	81.012	0.075
	K75x83x23	75	83	23	52.5	114.0	3600	5600	75.000	74.987	83.034	83.012	0.104
	K75x83x30	75	83	30	60.9	138	3600	5600	75.000	74.987	83.034	83.012	0.141
	K75x83x30FH	75	83	30	60.9	138	3600	5600	75.000	74.987	83.034	83.012	0.141
80	K80x86x20H	80	86	20	38.6	96.7	3400	5200	80.000	79.987	86.034	86.012	0.072
	K80x88x25FV1	80	88	25	54.0	121	3400	5200	80.000	79.987	88.034	88.012	0.134
	K80x88x30	80	88	30	67.5	161	3400	5200	80.000	79.987	88.034	88.012	0.153

RADIAL NEEDLE ROLLER AND CAGE ASSEMBLIES

SINGLE-ROW, DOUBLE-ROW ASSEMBLIES

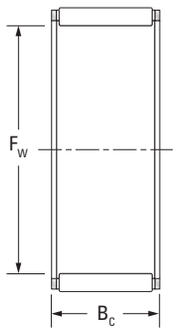

K

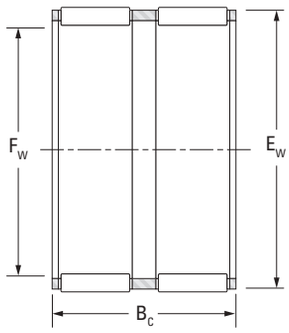

KZW

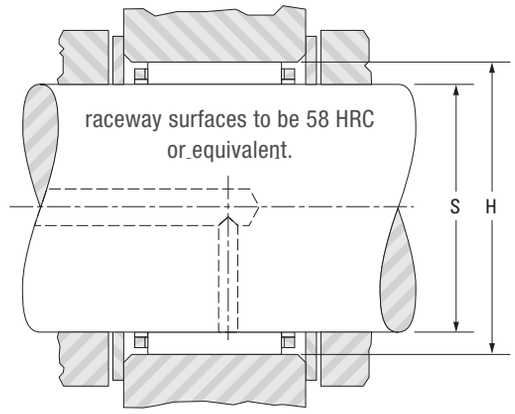

Shaft mm	Designation	F_w mm	E_w mm	B_c -0.20 -0.55 mm	Load ratings kN		Speed rating min^{-1}		S		H		Wt. kg
									Mounting dimensions				
					Dynamic	Static			Max. mm	Min. mm	Max. mm	Min. mm	
					C	C_0	Grease	Oil					
85	K85x92x20H	85	92	20	39.9	91.7	3200	4900	84.988	84.973	92.034	92.012	0.085
	K85x93x25F	85	93	25	58.8	138	3200	4900	84.988	84.973	93.034	93.012	0.000
	K85x93x30H	85	93	30	31024"	3200	4900	4900	84.988	84.973	93.034	93.012	0.166
90	K90x97x20	90	97	20	46.3	114	3000	4600	89.988	89.973	97.034	97.012	0.095
	K90x98x25F	90	98	25	54.8	128	3000	4600	89.988	89.973	98.034	98.012	0.134
	K90x98x30	90	98	30	63.6	155	3000	4600	89.988	89.973	98.034	98.012	0.168
95	K95x103x20	95	103	20	49.3	114	2800	4400	94.988	94.973	103.034	103.012	0.130
	K95x103x30F	95	103	30	71.0	183	2800	4400	94.988	94.973	103.034	103.012	0.180
100	K100x108x30	100	108	30	72.4	191	2700	4200	99.988	99.973	108.034	108.012	0.210
110	K101x118x24	110	118	24	64.0	168	2400	3800	109.988	109.973	118.034	108.012	0.165
	K110x118x30H	110	118	30	75.3	207	2400	3800	109.988	109.973	118.034	108.012	0.200

NEEDLE BUSHES

3

PAGE 46	3.1 TECHNICAL FEATURES
PAGE 51	3.2 NEEDLE BUSHES, FULL COMPLEMENT, RETAINED
PAGE 54	3.3 CAGED NEEDLE BUSHES
PAGE 58	3.4 CAGED NEEDLE BUSHES WITH SEAL
PAGE 60	3.5 INTERNAL RINGS FOR NEEDLE BUSHES

NEEDLE BUSHES
TECHNICAL FEATURES

Needle bushes consist of a thin, heat treated outer ring formed from accurately controlled sheet steel encasing a set of needles.
Bushes may have a full complement of needles retained in the outer ring by their ends or by grease; others have the needles retained in a cage which is prevented from moving laterally in the outer ring.
These bearings which occupy very little radial space are particularly economical to use and possess a high load capacity, relative to their size. They should be selected in preference to other bearings when conditions of mounting and operation permit.
When needle bushes are used without an inner ring and the needles rotate on a shaft of suitable hardness, they occupy minimum space and therefore provide a very satisfactory solution.
Maximum load capacity is obtained with a shaft hardness under the needles of at least 58 HRC. A lower hardness is acceptable if loads and required life permit.
Hardened inner rings can be supplied for most Nadella needle bushes. They remove the necessity to harden the shaft and enable the bearings to accept full load capacity.
All needle bushes are normally supplied unlubricated (except where a special grease has been requested). However, they are coated with a thin film of grease to prevent corrosion.

TYPES OF NEEDLE BUSHES

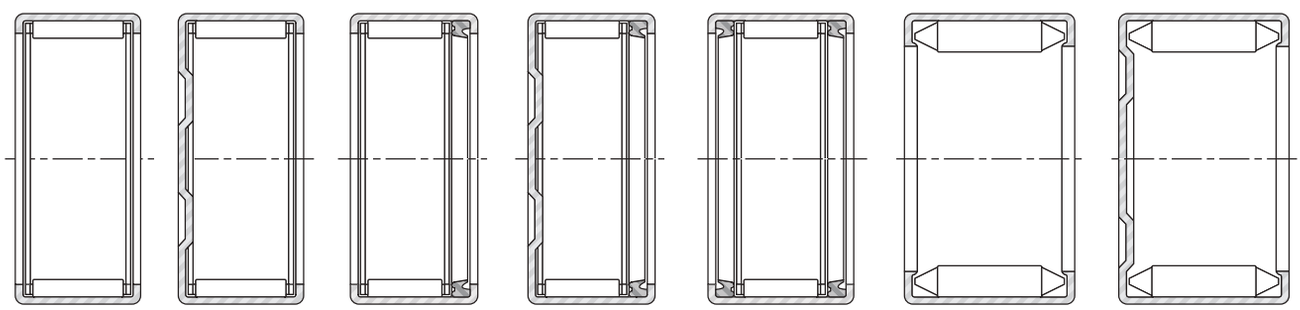

HK **BK** **HKRS** **BKRS** **HK.2RS** **DL** **DLF**

Full complements needle bushes		Caged needle bushes			
Retained needles					
open	closed end	open	closed end	open with seals	closed end with seals
DL	DLF	HK	BK	HK..RS HK..2RS	BK..RS

Suffixes	
AS1	lubrication hole
RS	seal on one side
.2RS	seal on each side

CONSTRACTION

The outer ring, in the form of a cup, is accurately drawn and no subsequent machining is performed. Needle bushes of series **HK** and **DL** have open ends. The **HK** series also are available with one seal, **HKRS**, and with two seals, **HK.2RS**. The stamped lip of a needle bush of series **HKRS** is at the seal end.

Needle bushes of series **BK** and **DLF** are closed at one end. They are used for shaft-end mounting. The open end is typically not sealed. Needle bushes may be made available on request with a lubricating hole, indicated by suffix **AS1**.
The one-piece steel cage used in most cases of needle bushes is designed to provide rigidity and minimize
wear. This cage design separates the needle roller guiding and retention functions.

Caged needle bushes incorporating seals

Caged needle bushes type **HK…RS** and **HK…2RS** have a seal incorporated on the inside of the face marked with the bearing part number. To this face should be applied the force necessary for installation or two seals version **2RS**. Thus, after fitting, the seal will normally be situated towards the outside of the bearing to prevent loss of lubricant and the entry of dirt, etc. (fig. 4).

If sealing is also necessary on the opposite side, a separate sealing ring type **DH** (see page 189), of thesame internal and external diameters as the needle bush may be used or, if available, a needle bush **HK…2RS**. The bearing seal which is made of synthetic rubber permits operation up to 120°C (minimum running temperature -20°C).

The shaft to be introduced into the needle bush on assembly must be chamfered at its end or at its shoulder (fig. 4). When carrying out this operation the surface passing through the seal must be greased, in order to avoid damages.

INNER RINGS

Inner rings for needle bushes are normally supplied without oil hole and have a cylindrical needle track. In those infrequent cases where lubrication is provided through the shaft, inner rings can be supplied on request with an oil hole (series **JR...JS1**).

JR JR...JS1
Inner rings series **JRZ...JS1** are without installation chamfers, allowing for maximum possible raceway contact. See section “Inner rings” on pag. 68 for further details.

LOAD RATING FACTORS

Dynamic loads

Needle bushes can accommodate only radial loads.

P= The maximum dynamic radial load that may be applied to a needle bush based on the dynamic load rating C, given in the bearing tables. This load should be ≤ C/3.

Static loads

$$f0= \frac{C_0}{P_0}$$

f_0 = static load safety factor
C_0 = basic static load rating (kN)
P_0 = maximum applied static load (kN)
To ensure satisfactory operation of needle bushes, under all types of conditio

NEEDLE BUSHES
TECHNICAL FEATURES

INSTALLATION

Radial needle roller and cage assemblies use the housing bore as t
For needle bushes one must accept that the thin outer ring is interference fitted to the housing bore and will correspond closely to the shape of the housing.
A housing with localised imperfections and thickness variations may cause deformation of the bush, which is detrimental to smooth operation. Best results are obtained with a geometrically uniform shape and even load distribution.
A mounting with interference of needle bushes in the housing obviates any lateral sealing device. The side of the bush not marked must remain moved away from any shoulder, seal, cover, spacer or edge of another bush. If for machining required there is a housing with shoulders, the latter must be sufficiently moved away from the bush to avoid deforming the edge during mounting.
The force required to insert the needle bush must be applied without shock to the side marked with the bearing part number.
Thus it is advisable to use a small press fitted with a suitable mandrel to apply uniform force to the bush centred in the housing (fig. 1).
The axial movement of the mandrel should be limited by a shoulder coming against the face of the housing.
Bushes having one closed end should preferably have the open end presented to the housing bore (fig. 2). If this is not possible, the force may be applied to the inside face of the closed end in the case of bushes type **DLF** (fig. 3) (this must not be done in the case of bushes type **BK**).

Fig. 1

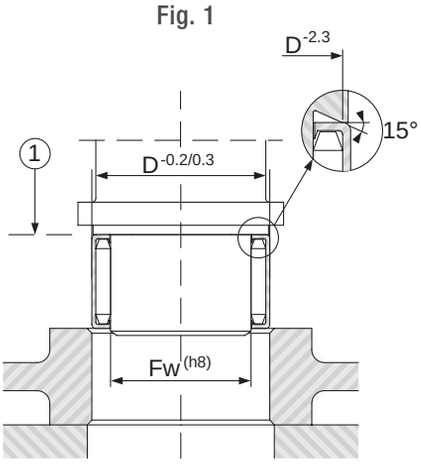

(1) Marked face

Fig. 2

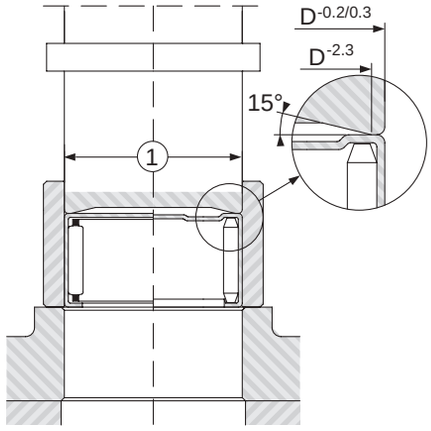

(1) Bore of ring D + 0.3 mm

Fig. 3

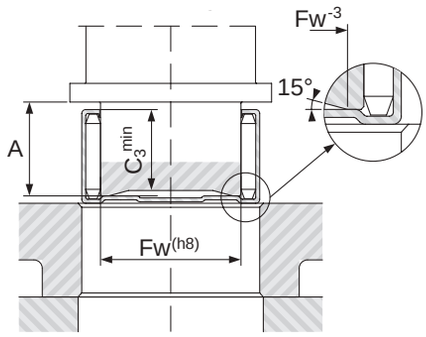

A min = C3 min + 1mm

Fig. 4

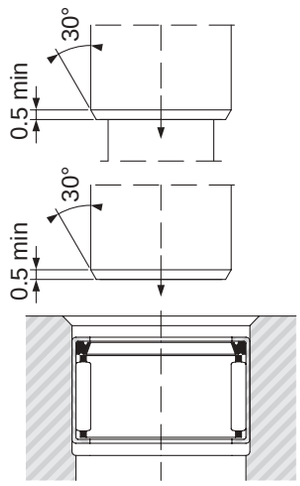

RADIAL PLAY

The fit of a bush in its housing determines to a large extent the dimension under the needles after fitting and consequently the radial play during operation.
The recommended shaft and housing tolerances give a radial play the limits of which are suitable for most normal applications. To obtain a closer clearance, it is possible to match the shaft diameters with the diameters under the needles of the bushes after the latter have been fitted into their housings.
The possible differences in the rigidity of housings and the variations of clamping force resulting from the tolerance build up do not permit one to establish a range of dimensions under the needles for every application.
The radial play limits should also take into account the tolerance of the shaft used directly as a raceway or the outer diameter of the inner ring after it has been fitted on to the shaft.

It is suggested that when inner rings are used with needle bushes, they should be mounted with a loose transition fit on the shaft using g6 (g5) shaft diameter tolerance.
The inner ring should be end-clamped against a shoulder. If a tight transition fit must be used [shaft diameter tolerance h6 (h5)] to keep the inner ring from rotating relative to the shaft, the inner ring outer diameter, as mounted, must not exceed the raceway diameter required by the needle bush for the particular application.
In case the outer diameter of the inner ring, when mounted on the shaft, exceeds the required raceway diameter for the matching needle bush, it should be ground to proper diameter while mounted on the shaft.

Types of bush	Operating conditions	Shaft tolerance, needle bushes without inner ring (recommended internal radial play).	Shaft tolerance, needle bushes with inner ring (recommended internal radial play).	Housing tolerance (recommended internal radial play)
HK, BK, HKRS, HK.2RS	One piece heavy section steel or cast iron housing	h5 (h6)	h6 (h5)	N6 (N7)
DL, DLF	One piece heavy section steel or cast iron housing	h5 (h6)	h6 (h5)	H6 (H7)
HK, BK, HKRS, HK.2RS	Housing material of low rigidity (Non-ferrous metal (1) or thin casings in steel).	h5 (h6)	h6 (h5)	R6 (R7)
DL, DLF	Housing material of low rigidity (Non-ferrous metal (1) or thin casings in steel).	h5 (h6)	h6 (h5)	M6 (M7)
HK, BK, HKRS, HK.2RS	Outer ring rotation (one piece heavy section steel or cast iron housing).	f5 (f6)	g6 (g5)	R6 (R7)
DL, DLF	Outer ring rotation (one piece heavy section steel or cast iron housing).	f5 (f6)	g6 (g5)	M6 (M7)
HK, BK, HKRS, HK.2RS	Oscillating motion	j5 (j6)	h6 (h5)	(2)
DL, DLF	Oscillating motion	j5 (j6)	h6 (h5)	(2)

(1) If a housing of non-ferrous metal reaches temperatures considerably higher (or lower) than 20°C, account should be taken of the difference in expansion (orcontraction) of the bush and suitable adjustments to the fits should be made. The cylindrical tolerance defined as the difference in radii of two coaxial cylinders (Standard ISO 1101) must normally be less than a quarter of the machining tolerance on the defined diameter. However, far precision applications or high speeds, it is recommended that the cylindrical tolerance is reduced to one eighth of the machining tolerance.

(2) The tolerance depends on the shape of the housing.

NEEDLE BUSHES
TECHNICAL FEATURES

3.1

INSPECTION OF NEEDLE BUSHES

Although the bush is accurately drawn from strip steel, because of its fairly thin section, it may go out-of-round during heat treatment. When the bearing is pressed into a true round housing, or ring gage of correct size and wall thickness, it becomes round and is sized properly.

For this reason, it is incorrect to inspect an unmounted drawn cup bearing by measuring the outer diameter.

The correct method for inspecting the needle bush size is to:

1. Press the needle bush into a ring gage of proper size.
2. Plug the needle bush bore with the appropriate “GO” and “NO GO” gages, or measure it with a tapered arbor (lathe mandrel).

The “GO” gage size is the minimum needle roller complement bore diameter. The “NO GO” gage size is larger than the maximum needle roller complement bore diameter.

FULL COMPLEMENT NEEDLE BUSHES
Type DL, DLF

Nominal bore diameter	Ring Gage*	Needle roller complement bore diameter	
		Max.	Min.
mm	mm	mm	mm
5.000	9.000	5.036	5.009
6.000	12.000	6.034	6.009
8.000	14.000	8.034	8.009
9.000	14.000	9.034	9.009
10.000	16.000	10.034	10.009
12.000	18.000	12.035	12.009
13.000	19.000	13.035	13.009
14.000	23.000	14.035	14.009
15.000	24.000	15.035	15.009
16.000	26.000	16.035	16.009
17.000	23.000	17.035	17.009
18.000	24.000	18.035	18.009
20.000	26.000	20.035	20.009
22.000	28.000	22.035	22.009
25.000	33.000	25.041	25.015
28.000	36.000	28.041	28.015
30.000	38.000	30.041	30.015
35.000	33.000	35.041	35.015
40.000	48.000	40.041	40.015
44.000	52.000	44.041	44.015
45.000	52.000	45.041	45.015
47.000	55.000	47.041	47.015
50.000	58.000	50.041	50.015
55.000	63.000	55.041	55.015

CAGED NEEDLE BUSHES
Type HK, BK, HK...RS, BK...RS, HK...2RS

Nominal bore diameter	Ring Gage*	Needle roller complement bore diameter	
		Max.	Min
mm	mm	mm	mm
3.000	6.484	3.024	3.006
4.000	7.984	4.028	4.010
5.000	8.984	5.028	5.010
6.000	9.984	6.028	6.010
7.000	10.980	7.031	7.013
8.000	11.980	8.031	8.013
9.000	12.980	9.031	9.013
10.000	13.980	10.031	10.013
12.000	15.980	12.034	12.016
12.000	17.980	12.034	12.016
13.000	18.980	13.034	13.016
14.000	19.976	14.034	14.016
15.000	20.976	15.034	15.016
16.000	21.976	16.034	16.016
17.000	22.976	17.034	17.016
18.000	23.976	18.034	18.016
20.000	25.976	20.041	20.020
22.000	27.976	22.041	22.020
25.000	31.972	25.041	25.020
28.000	34.972	28.041	28.020
30.000	36.972	30.041	30.020
35.000	41.972	35.050	35.020
40.000	46.972	40.050	40.025
45.000	51.967	45.050	45.025
50.000	57.967	50.050	50.025
60.000	67.967	60.060	60.030

NEEDLE BUSHES, FULL COMPLEMENT, RETAINED

OPEN SERIES DL | CLOSED END SERIES DLF

3.2

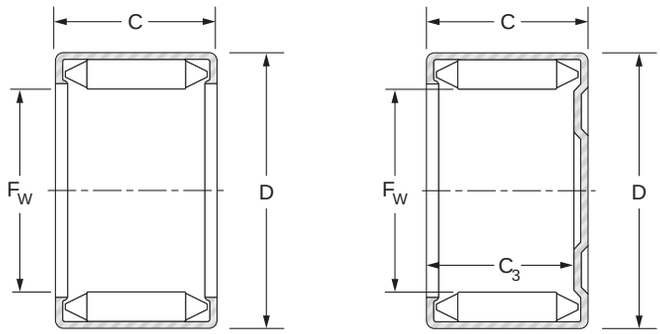

DL **DLF**

Shaft mm	Designation	F_w mm	D mm	C mm	$C_{3\ min.}$ mm	Load Ratings kN		Speed Limit min^{-1}		Weight. kg	Internal Ring
						Dynamic	Static				
						C	C_0	Grease	Oil		
6	DL 6 10	6	12	10	-	2.90	3.80	33000	50000	0.004	-
	DLF 6 10	6	12	10	7.7	2.90	3.80	33000	50000	0.004	-
8	DL 8 10	8	14	10	-	4.50	6.50	24000	37500	0.005	-
	DLF 8 10	8	14	10	7.7	4.50	6.50	24000	37500	0.006	-
10	DL 10 12	10	16	12	-	7.00	10.9	20000	30000	0.008	-
	DLF 10 12	10	16	12	9.7	7.00	10.9	20000	30000	0.009	-
12	DL 12 10	12	18	10	-	6.00	9.7	16000	25000	0.008	JR8x12x10.5
	DLF 12 10	12	18	10	7.7	6.00	9.7	16000	25000	0.008	JR8x12x12.5
	DL 12 12	12	18	12	-	7.00	11.5	16000	25000	0.009	JR8x12x12.5
	DLF 12 12	12	18	12	9.7	7.00	11.5	16000	25000	0.010	JR8x12x12.5
13	DL 13 12	13	19	12	-	8.50	14.2	15000	23000	0.010	JR10x13x2.5
	DLF 13 12	13	19	12	9.7	8.50	14.2	15000	23000	0.011	JR10x13x12.5
14	DL 14 12	14	20	12	-	7.90	13.5	14000	21500	0.011	JR10x14x12.5
	DLF 14 12	14	20	12	9.7	7.90	13.5	14000	21500	0.012	JR10x14x12.5
15	DL 15 12	15	21	12	-	9.40	16.4	13000	20000	0.011	JR12x15x12.5
	DLF 15 12	15	21	12	9.7	9.40	16.4	13000	20000	0.012	JR12x15x12.5
16	DL 16 12	16	22	12	-	8.70	15.5	12000	18500	0.012	JR12x16x12.5
	DLF 16 12	16	22	12	9.7	8.70	15.5	12000	18500	0.013	JR12x16x12.5
17	DL 17 12	17	23	12	-	9.00	16.2	11000	17500	0.013	JR13x17x12.5
	DLF 1712	17	23	12	9.7	9.00	16.2	11000	17500	0.014	JR13x17x12.5
18	DL 18 12	18	24	12	-	10.7	19.5	11000	16500	0.014	JR13x18x12.5
	DLF 18 12	18	24	12	9.7	10.7	19.5	11000	16500	0.016	JR13x18x12.5
	DL 18 16	18	24	16	-	16.0	29.5	11000	16500	0.019	JR15x18x16.5
	DLF 18 16	18	24	16	13.7	16.0	29.5	11000	16500	0.021	JR15x18x16.5

NEEDLE BUSHES, FULL COMPLEMENT, RETAINED
OPEN SERIES DL | CLOSED END SERIES DLF

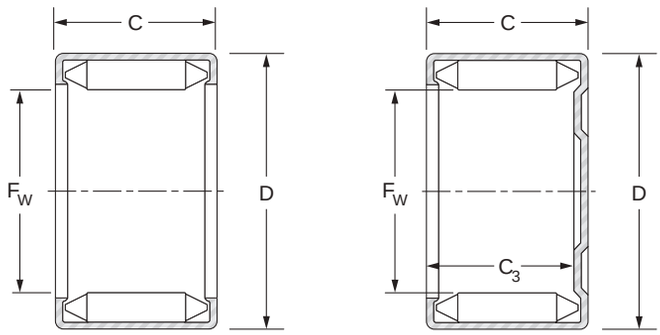

DL **DLF**

Shaft mm	Designation	F_w mm	D mm	C mm	$C_{3\ min.}$ mm	Load Ratings kN		Speed Limit min^{-1}		Weight. kg	Internal Ring
						Dynamic	Static				
						C	C_0	Grease	Oil		
20	DL 20 12	20	26	12	-	10.2	19.5	10000	15000	0.015	JR15x20x12
	DLF 20 12	20	26	12	9.7	10.2	19.5	10000	15000	0.017	JR15x20x12
	DL 20 16	20	26	16	-	16.0	30.5	10000	15000	0.020	JR17x20x16
	DLF 20 16	20	26	16	13.7	16.0	30.5	10000	15000	0.022	JB17x20x16
22	DL 22 16	22	28	16	-	17.0	33.0	8800	13500	0.022	JR17x22x16
	DLF 22 16	22	28	16	13.7	17.0	33.0	8800	13500	0.025	JR17x22x16
25	DL 25 16	25	33	16	-	16.0	32.5	7800	12000	0.035	JR20x25x17
	DLF 25 16	25	33	16	13.7	16.0	32.5	7800	12000	0.039	JR20x25x17
	DL 25 20	25	33	20	-	22.8	46.0	7800	12000	0.043	JR20x25x20.5
	DLF 25 20	25	33	20	17.7	22.8	46.0	7800	12000	0.047	JR20x25x20.5
28	DL 28 20	28	36	20	-	24.5	52.0	7200	11000	0.047	JR22x28x20.5
	DLF 28 20	28	36	20	17.7	24.5	52.0	7200	11000	0.051	JR22x28x20.5
30	DL 30 16	30	38	16	-	21.7	46.5	6500	10000	0.040	JR25x30x17
	DLF 30 16	30	38	16	13.7	21.7	46.5	6500	10000	0.045	JR25x30x17
	DL 30 20	30	38	20	-	26.0	56.0	6500	10000	0.050	JR25x30x20.5
	DLF 30 20	30	38	20	17.7	26.0	56.0	6500	10000	0.055	JR25x30x20.5
	DL 30 25	30	38	25	-	35.5	76.0	6500	10000	0.063	JR25x30x26
	DLF 30 25	30	38	25	22.7	35.5	76.0	6500	10000	0.068	JR25x30x26
35	DL 35 16	35	43	16	-	24.0	54.0	5500	8500	0.046	JR30x35x17
	DLF 35 16	35	43	16	13.7	24.0	54.0	5500	8500	0.053	JR30x35x17
	DL 35 20	35	43	20	-	29.0	65.0	5500	8500	0.057	JR30x35x20.5
	DLF 35 20	35	43	20	17.7	29.0	65.0	5500	8500	0.064	JR30x35x20.5
40	DL 40 16	40	48	16	-	26.5	62.0	4900	7500	0.051	JR35x40x17
	DLF 40 16	40	48	16	13.7	26.50	62.0	4900	7500	0.061	JR35x40x17
	DL 40 20	40	48	20	-	36.0	84.0	4900	7500	0.064	JR35x40x20.5
	DLF 40 20	40	48	20	17.7	36.0	84.0	4900	7500	0.074	JR35x40x20.5

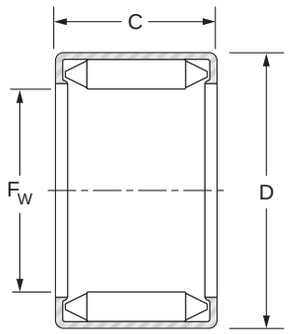

DL

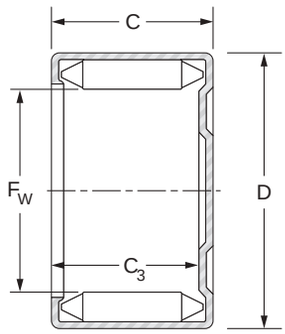

DLF

Shaft mm	Designation	F_w mm	D mm	C mm	$C_{3\ min.}$ mm	Load Ratings kN		Speed Limit min^{-1}		Weight. kg	Internal Ring
						Dynamic	Static				
						C	C_0	Grease	Oil		
44	DL 44 16	44	52	16	-	23.80	57.00	4400	6800	0.056	-
	DLF 44 16	44	52	16	13.7	23.80	57.00	4400	6800	0.066	-
47	DL47 16	47	55	16	-	25.00	61.00	4200	6400	0.060	-
	DLF 4716	47	55	16	13.7	25.00	61.00	4200	6400	0.071	-
50	DL 501 2	50	58	12	-	20.00	50.00	3900	6000	0.047	-
	DLF 5012	50	58	12	9.7	20.00	50.00	3900	6000	0.061	-
	DL 50 18	50	58	18	-	36.50	92.00	3900	6000	0.071	-
	DLF 50 18	50	58	18	15.7	36.50	92.00	3900	6000	0.085	-
	DL 50 20	50	58	20	-	37.00	93.00	3900	6000	0.077	JR45x50x20
	DLF 50 20	50	58	20	17.7	37.00	93.00	3900	6000	0.091	JR45x50x20
55	DL 55 20	55	63	20	-	39.5	102.0	3600	5500	0.086	JR50x55x20
	DLF 55 20	55	63	20	17.7	39.5	102.0	3600	5500	0.102	JR50x55x20

CAGED NEEDLE BUSHES
OPEN SERIES HK | CLOSED END SERIES BK

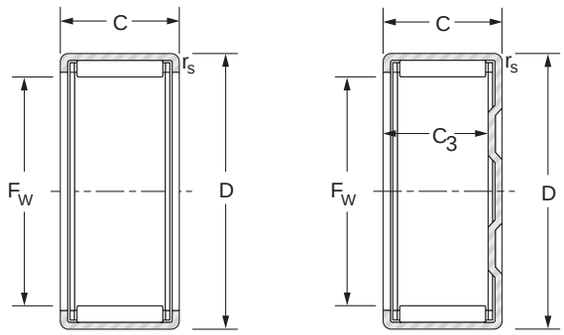

HK BK

Shaft mm	Designation	F_w mm	D mm	C mm	$C_{3\ min.}$ mm	$r_{s\ min.}$ mm	Load ratings kN		Speed limit min^{-1}		Weight. kg	Internal Ring
							Dynamic	Static				
							C	C_0	Grease	Oil		
3	BK0306	3	6.5	6	5.2	0.30	1.20	0.78	30000	46000	0.001	-
	HK0306	3	6.5	6	-	0.30	1.60	1.14	30000	46000	0.001	-
4	BK0408	4	8	8	6.4	0.40	1.83	1.32	25000	39000	0.002	-
	HK0408	4	8	8	-	0.40	1.88	1.38	25000	39000	0.002	-
5	BK0509	5	9	9	7.4	0.40	2.52	2.07	23000	36000	0.002	-
	HK0509	5	9	9	-	0.40	2.52	2.07	23000	36000	0.002	-
6	BK0608	6	10	8	6.4	0.40	2.34	1.95	22000	33000	0.002	-
	HK0608	6	10	8	-	0.40	2.34	1.95	22000	33000	0.002	-
	BK0609	6	10	9	7.4	0.40	3.14	2.85	22000	33000	0.003	-
	HK0609	6	10	9	-	0.40	3.14	2.85	22000	33000	0.002	-
7	BK0709	7	11	9	7.4	0.40	3.24	3.10	21000	32000	0.003	-
	HK0709	7	11	9	-	0.40	3.23	3.05	21000	32000	0.003	-
8	BK0808	8	12	8	6.4	0.40	2.90	2.73	20000	31000	0.003	-
	HK0808	8	12	8	-	0.40	2.90	2.73	20000	31000	0.003	-
	BK0810	8	12	10	8.4	0.40	3.93	4.14	20000	31000	0.004	JR5x8x12
	HK0810	8	12	10	-	0.40	3.95	4.07	20000	31000	0.004	JR5x8x12
9	BK0910	9	13	10	8.4	0.40	4.57	5.07	19000	30000	0.004	JR6x9x12
	HK0910	9	13	10	-	0.40	4.57	5.07	19000	30000	0.004	JR6x9)(12
	BK0912	9	13	12	10.4	0.40	5.65	6.65	19000	30000	0.005	JR6x9x12
	HK0912	9	13	12	-	0.40	5.65	6.65	19000	30000	0.005	JR6x9x12
10	BK1010	10	14	10	8.4	0.40	4.78	5.51	19000	29000	0.004	JR7x10x10.5
	HK1010	10	14	10	-	0.40	4.78	5.51	19000	29000	0.004	JR7x10x10.5
	BK1012	10	14	12	10.4	0.40	5.90	7.23	19000	29000	0.006	JR7x10x12
	HK1012	10	14	12	-	0.40	5.90	7.23	19000	29000	0.005	JR7x10x12
	BK1015	10	14	15	13.4	0.40	7.49	9.81	19000	29000	0.006	JR7x10x16
	HK1015	10	14	15	-	0.40	7.49	9.81	19000	29000	0.006	JR7x10x16

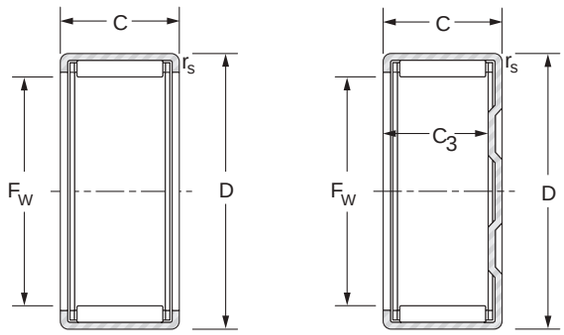

HK BK

Shaft mm	Designation	F_w mm	D mm	C mm	$C_{3\ min.}$ mm	$r_{s\ min.}$ mm	Load ratings kN Dynamic C	Load ratings kN Static C_0	Speed limit min^{-1} Grease	Speed limit min^{-1} Oil	Weight. kg	Internal Ring
12	BK1210	12	16	10	8.4	0.4	4.96	6.08	18000	28000	0.006	JR8x12x10.5
	HK1210	12	16	10	-	0.4	4.96	6.08	18000	28000	0.006	JR8x12x10.5
	BK1212	12	18	12	9.3	1	6.61	7.29	14000	22000	0.012	JR8x12x12.5
	HK1212	12	18	12	-	1	6.61	7.29	14000	22000	0.01	JR8x12x12.5
13	BK1312	13	19	12	9.3	1	6.92	7.89	14000	22000	0.012	JR10x13x12.5
	HK1312	13	19	12	-	1	6.92	7.89	14000	22000	0.01	JR10x13x12.5
14	BK1412	14	20	12	9.3	1	7.21	8.50	14000	21000	0.014	JR10x14x12
	HK1412	14	20	12	-	1	7.21	8.50	14000	21000	0.011	JR10x14x12
15	BK1512	15	21	12	9.3	1	7.16	8.57	14000	21000	0.015	JR12x15x12.5
	HK1512	15	21	12	-	1	7.49	9.11	14000	21000	0.012	JR12x15x12.5
	BK1516	15	21	16	13.3	1	10.70	14.4	14000	21000	0.019	JR12x15x16.5
	HK1516	15	21	16	-	1	10.70	14.4	14000	21000	0.018	JR12x15x16.5
	BK1522	15	21	22	19.3	1	13.50	19.4	14000	21000	0.022	JR12x15x22.5
	HK1522	15	21	22	-	1	13.50	19.4	14000	21000	0.024	JR12x15x22.5
16	BK1612	16	22	12	9.3	1	7.76	9.72	14000	21000	0.016	JR12x16x12
	HK1612	16	22	12	-	1	7.76	9.72	14000	21000	0.012	JR12x16x12
	BK1616	16	22	16	13.3	1	11.1	15.3	14000	21000	0.02	JR12x16x16
	HK1616	16	22	16	-	1	11.1	15.3	14000	21000	0.016	JR12x16x16
	BK1622	16	22	22	19.3	1	13.4	19.5	14000	21000	0.028	JR12x16x22
	HK1622	16	22	22	-	1	13.4	19.5	14000	21000	0.022	JR12x16x22
17	BK1712	17	23	12	9.3	1	8.12	10.4	13000	20000	0.018	-
	HK1712	17	23	12	-	1	8.12	10.4	13000	20000	0.013	-
18	BK1812	18	24	12	9.3	1	8.41	11.11	12000	18000	0.017	-
	HK1812	18	24	12	-	1	8.41	11.11	12000	18000	0.015	-
	BK1816	18	24	16	13.3	1	11.6	16.8	12000	18000	0.022	JR15x18x16.5
	HK1816	18	24	16	-	1	11.6	16.8	12000	18000	0.018	JR15x18x16.5

CAGED NEEDLE BUSHES
OPEN SERIES HK | CLOSED END SERIES BK

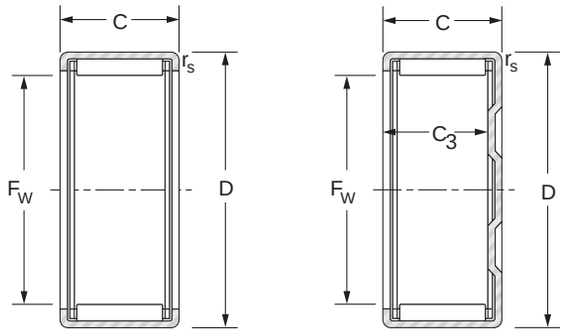

HK BK

Shaft mm	Designation	F_w mm	D mm	C mm	$C_{3\ min.}$ mm	$r_{s\ min.}$ mm	Load ratings kN		Speed limit min^{-1}		Weight. kg	Internal Ring
							Dynamic	Static				
							C	C_0	Grease	Oil		
20	BK2012	20	26	12	9.3	1	8.97	12.5	11000	16000	0.017	JR15x20x12
	HK2012	20	26	12	-	1	8.97	12.5	11000	16000	0.015	JR15x20)(12
	BK2016	20	26	16	13.3	1	12.40	18.90	11000	16000	0.024	JR17x20x16.5
	HK2016	20	26	16	-	-	12.40	18.90	11000	16000	0.022	JRI 7x20x16.5
	BK2020	20	26	20	17.3	-	15.50	25.30	11000	16000	0.027	JR17x20x20.5
	HK2020	20	26	20	-	-	15.90	26.20	11000	16000	0.025	JR17x20x20.5
	BK2030	20	26	30	27.3	1	21.20	37.80	11000	16000	0.043	JR17x20x30.5
	HK2030	20	26	30	-	1	21.20	37.80	11000	16000	0.041	JR17x20x30.5
22	BK2210	22	28	10	9.3	1	7.06	9.49	9600	15000	0.013	-
	HK2210	22	28	10	-	1	7.06	9.49	9600	15000	0.013	-
	BK2212	22	28	12	9.3	1	9.81	14.50	9600	15000	0.02	JR17x22x13
	HK2212	22	28	12	-	1	9.81	14.50	9600	15000	0.015	JR17x22x13
	BK2216	22	28	16	13.3	1	13.10	20.90	9600	15000	0.027	JR17x22x16
	HK2216	22	28	16	-	1	13.10	20.90	9600	15000	0.022	JR17x22x16
	BK2220	22	28	20	17.3	1	15.30	25.50	9600	15000	0.028	JR17x22x23
	HK2220	22	28	20	-	1	15.30	25.50	9600	15000	0.026	JR17x22x23
25	BK2512	25	32	12	9.3	1	10.90	14.70	8500	13000	0.025	-
	HK2512	25	32	12	-	1	10.90	14.70	8500	13000	0.021	-
	BK2516	25	32	16	13.3	1	15.60	23.50	8500	13000	0.031	JR20x25x17
	HK2516	25	32	16	-	1	15.60	23.50	8500	13000	0.028	JR20x25x17
	BK2520	25	32	20	17.3	-	20.60	33.40	8500	13000	0.043	JR20x25x20.5
	HK2520	25	32	20	-	1	20.60	33.40	8500	13000	0.040	JR20x25x20.5
	BK2526	25	32	26	23.3	1	25.70	44.40	8500	13000	0.051	JR20x25x26.5
	HK2526	25	32	26	-	1	25.70	44.40	8500	13000	0.046	JR20x25x26.5
	BK2538	25	32	38	35.3	1	35.30	66.90	8500	13000	0.077	JR20x25x38.5
	HK2538	25	32	38	-	1	35.30	66.90	8500	13000	0.068	JR20x25x38.5
28	BK2816	28	35	16	13.3	1	15.9	24.9	7500	12000	0.038	JR22x28x17
	HK2816	28	35	16	-	1	15.9	24.9	7500	12000	0.032	JR22x28x17
	BK2820	28	35	20	17.3	1	20.9	35.3	7500	12000	0.047	JR22x28x20.5
	HK2820	28	35	20	-	1	20.9	35.3	7500	12000	0.040	JR22x28x20.5

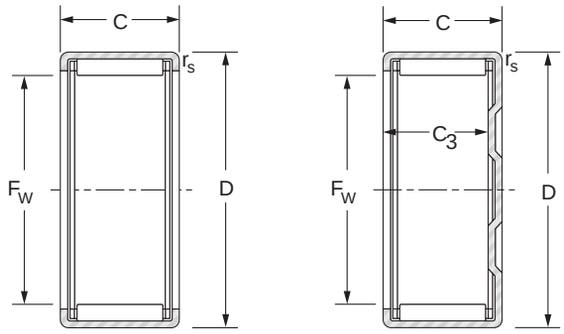

HK BK

Shaft mm	Designation	F_w mm	D mm	C mm	$C_{3\ min.}$ mm	$r_{s\ min.}$ mm	Load ratings kN Dynamic C	Load ratings kN Static C_0	Speed limit min^{-1} Grease	Speed limit min^{-1} Oil	Weight. kg	Internal Ring
30	BK3012	30	37	12	9.3	1	11.6	16.8	7000	11000	0.031	-
	HK3012	30	37	12	-	1	12.0	17.7	7000	11000	0.024	-
	BK3016	30	37	16	13.30	1	16.8	27.3	7000	11000	0.041	JR25x30x17
	HK3016	30	37	16	-	1	16.8	27.3	7000	11000	0.032	JR25x30x17
	BK3020	30	37	20	17.3	1	22.4	39.6	7000	11000	0.053	JR25x30x20.5
	HK3020	30	37	20	-	1	22.4	39.6	7000	11000	0.042	JR25x30x20.5
	BK3026	30	37	26	23.3	1	27.4	51.2	7000	11000	0.067	JR25x30x26.5
	HK3026	30	37	26	-	1	27.4	51.2	7000	11000	0.054	JR25x30x26.5
	BK3038	30	37	38	35.3	1	38.4	79.2	7000	11000	0.093	JR25x30x38.5
	HK3038	30	37	38	-	1	38.4	79.2	7000	11000	0.075	JR25x30x38.5
35	HK3512	35	42	12	-	1	13.0	20.6	5900	9100	0.028	-
	HK3516	35	42	16	-	1	17.4	29.9	5900	9100	0.037	JR30x35x17
	BK3520	35	42	20	17.3	1	24.5	46.8	5900	9100	0.065	JR30x35x20.5
	HK3520	35	42	20	-	1	24.5	46.8	5900	9100	0.049	JR30x35x20.5
40	HK4012	40	47	12	-	1	14.7	25.3	5200	7900	0.033	-
	HK4016	40	47	16	-	1	18.9	34.8	5200	7900	0.042	JR35x40x17
	BK4020	40	47	20	17.3	1	25.1	50.4	5200	7900	0.070	JR35x40x20.5
	HK4020	40	47	20	-	1	25.1	50.4	5200	7900	0.060	JR35x40x20.5
45	HK4512	45	52	12	-	1	14.1	24.8	4600	7000	0.036	-
	HK4516	45	52	16	-	1	19.8	38.5	4600	7000	0.048	JR40x45x17
	BK4520	45	52	20	17.3	1	26.3	55.4	4600	7000	0.079	JR40x45x20.5
	HK4520	45	52	20	-	1	27.2	58.2	4600	7000	0.059	JR40x45x20.5
50	HK5012	50	58	12	-	1	17.0	28.7	4100	6300	0.045	-
	HK5020	50	58	20	-	1	30.9	62.2	4100	6300	0.072	JR45x50x20
	HK5025	50	58	25	-	1	35.5	74.1	4100	6300	0.092	JR45x50x25.5
55	HK5520	55	63	20	-	1	31.0	64.4	3700	5700	0.079	JR45x55x20
60	HK6012	60	68	12	-	1	17.2	31.2	3400	5200	0.060	-
	HK6020	60	68	20	-	1	35.6	79,5	3400	5200	0.090	JR5x60x20

CAGED NEEDLE BUSHES WITH SEAL
SERIES HR...RS, BK...RS, HK...2RS

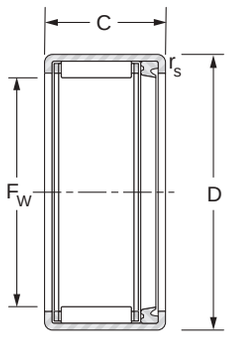

HK RS

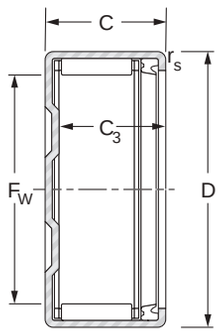

BK RS

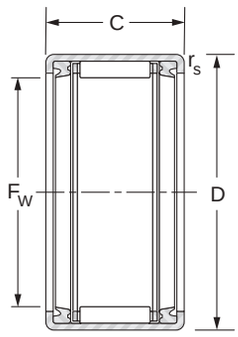

HK.2RS

Shaft mm	Designation	F_w mm	D mm	C mm	$C_{3\ min.}$ mm	$r_{s\ min.}$ mm	Load ratings kN		Speed limit min^{-1}	Weight. kg	Internal Ring
							Dynamic	Static			
							C	C_0	Grease		
8	HK0810RS	8	12	10	-	0.4	2.90	2.73	20000	0.004	-
10	HK1012RS	10	14	12	-	0.4	4.78	5.51	19000	0.006	-
12	HK1214RS	12	18	14	-	1	6.61	7.29	14000	0.013	-
	HK1216.2RS	12	18	16	-	1	6.87	7.65	14000	0.016	-
14	BK1414RS	14	20	14	11.6	1	7.17	8.41	14000	0.014	-
	HK1414RS	14	20	14	-	1	7.17	8.41	14000	0.015	JR10x14x16
	HK1416.2RS	14	20	16	-	1	7.17	8.41	14000	0.014	JR10x14x20
15	BK1514RS	15	21	14	11.3	1	7.87	9.69	13000	0.017	JR12x15x16.5
	HK1514RS	15	21	14	-	1	7.87	9.69	13000	0.016	JR12x15x16.5
	HK1516.2RS	15	21	16	-	1	7.87	9.69	13000	0.019	JR12x15x16.5
16	HK1614RS	16	22	14	-	1	7.82	9.76	12000	0.014	JR12x16x16
	HK1616.2RS	16	22	16	-	1	7.82	9.76	12000	0.015	JR12x16x20
18	HK1814RS	18	24	14	-	1	8.41	11.10	11000	0.018	JR15x18x16.5
	HK1816.2RS	18	24	16	-	1	8.41	11.10	11000	0.017	JR15x18x16.5
20	HK2016.2RS	20	26	16	-	1	8.97	12.50	9700	0.023	JR17x20x16.5
	HK2018RS	20	26	18	-	1	12.40	18.90	9700	0.025	JR17x20x20.5
	HK2020.2RS	20	26	20	-	1	12.40	18.90	9700	0.028	JR17x20x20.5
22	HK2216.2RS	22	28	16	-	1	9.81	14.50	8800	0.025	-
	HK2218RS	22	28	18	-	1	13.10	20.90	8800	0.027	JR17x22x23
	HK2220.2RS	22	28	20	-	1	13.10	20.90	8800	0.026	JR17x22x23
25	HK2516.2RS	25	32	16	-	1	11.10	15.10	7800	0.030	JR20x25x17
	HK2518RS	25	32	18	-	1	16.20	24.60	7800	0.034	JR20x25x20.5
	HK2520.2RS	25	32	20	-	1	16.20	24.60	7800	0.033	JR20x25x20.5
	HK2522RS	25	32	22	-	1	20.60	33.40	7800	0.042	JR20x25x26
	HK2524.2RS	25	32	24	-	1	20.6	33.4	7800	0.047	JR20x25x26

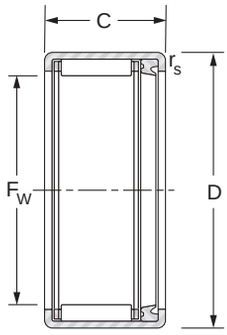

HK RS

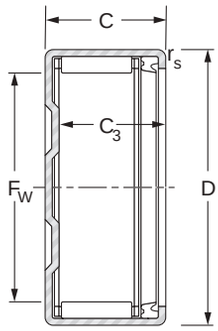

BK RS

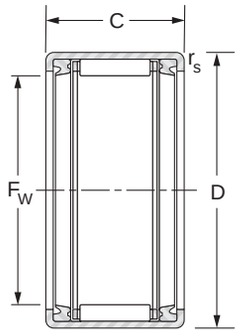

HK.2RS

Shaft mm	Designation	F_w mm	D mm	C mm	$C_{3\ min.}$ mm	$r_{s\ min.}$ mm	Load ratings kN		Speed limit min^{-1}	Weight. kg	Internal Ring
							Dynamic	Static			
							C	C_0	Grease		
28	HK2820.2RS	28	35	20	1	15.9	24.9	6900	6900	0.042	JR22x28x20.5
30	HK3016.2RS	30	37	16	1	11.6	16.8	6500	6500	0.030	JR25x30x17
	HK3018RS	30	37	18	1	16.8	27.3	6500	6500	0.042	JR25x30x20.5
	HK3020.2RS	30	37	20	1	16.8	27.3	6500	6500	0.040	JR25x30x20.5
	HK3022RS	30	37	22	1	22.4	39.6	6500	6500	0.051	JR25x30x26
	HK3024.2RS	30	37	24	1	22.4	39.6	6500	6500	0.057	JR25x30x26
35	HK3516.2RS	35	42	16	1	14.2	23.2	5500	5500	0.047	JR30x35x17
	HK3518RS	35	42	18	1	17.4	29.9	5500	5500	0.054	JR30x35x20.5
	HK3520.2RS	35	42	20	1	17.4	29.9	5500	5500	0.044	JR30x35x20.5
40	HK4016.2RS	40	47	16	1	13.4	22.4	4900	4900	0.037	JR35x40x20
	HK4018RS	40	47	18	1	18.9	34.8	4900	4900	0.057	JR35x40x20.5
	HK4020.2RS	40	47	20	1	18.9	34.8	4900	4900	0.053	JR35x40x20.5
45	HK4518RS	45	52	18	1	19.8	38.5	4300	4300	0.064	JR40x45x20.5
	HK4520.2RS	45	52	20	1	19.8	38.5	4300	4300	0.055	JR40x45x20.5
50	HK5022RS	50	58	22	1	28.8	56.6	3900	3900	0.097	JR45x50x25.5
	HK5024.2RS	50	58	24	1	28.8	56.6	3900	3900	0.083	JR45x50x25.5

INTERNAL RINGS FOR NEEDLE BUSHES
TECHNICAL SPECIFICATIONS

When it is impractical to meet the shaft raceway design requirements (hardness, surface finish, case depth, etc.) outlined in the engineering section of this catalogue, standard inner rings may be used.
Inner rings are made of rolling bearing steel and after hardening, their bores, raceways and end surfaces are ground. Inner rings may be used to provide inner raceway surfaces for radial needle roller and cage assemblies, needle roller bearings and needle bushes.
The extended inner rings are suitable for use with bearings containing lip contact seals and for applications in which axial movement may be present.

CONSTRUCTION

Inner rings are available in four basic designs and differ only by the chamfers at the ends of the raceway surfaces, the lubricant access holes and the raceway profile.
Inner rings of series **JR** have chamfers to assist in bearing installation but are without lubricating holes.
Inner rings of series **JR.JS1** have bearing installation chamfers and lubricating holes (bore diameters 5 to 50 mm). Inner rings of series **JRZ.JS1** are without installation chamfers, allowing for maximum possible raceway contact.

DIMENSIONAL ACCURACY

The tolerances of size, form, and runout for inner rings meet the requirements of ISO normal tolerance class for radial bearings (see tables at the end of the catalogue).
Most inner rings are produced with outside diameter raceway tolerance in accordance with h5 which, in most cases, is suitable for combining the needle roller bearings to give the normal clearance class, and for use with needle bushes.
Other raceway tolerances may also be found on inner rings for combining with needle roller bearings to give one of the clearance requirement.

MOUNTING OF INNER RINGS

Inner rings may be mounted on the shaft with either a loose transition fit or an interference fit.
These fits used in conjunction with the proper fit of the bearing outer ring, will provide the correct operating clearances for most applications.
Regardless of the fit of the inner ring on the shaft, the inner ring should be axially located by shaft shoulders or other positive means. The shaft shoulder diameter adjacent to the inner ring must not exceed the inner ring outside diameter.
When inner rings are to be used with the needle roller bearings, appropriate shaft tolerances should be selected from table 3 on page 94 in the needle bearing section.
When inner rings are to be used with needle bushes the suggested shaft tolerances are given in the “Radial play” paragraph on page 57 of the “Needle bushes” section of this catalogue.

SEALING RINGS

Sealing rings series DH, tabulated on pages 191 to 193 are of a small cross section suitable for use with needle bushes. They provide a cost effective and compact construction in applications using grease lubrication.

CONSTRUCTION

Sealing rings series DH comprise of a steel angle casing on the outside and a molded nitrile rubber sealing element containing the sealing lip.
These seals have an operating temperature range of -20°C to + 120°C.

MOUNTING OF LIP CONTACT SEALS

It is generally sufficient to press the seal into its predetermined position. Axial locating devices are not required for the seals in normal circumstances.
The shaft surface on which the seal is to run must be hardened and preferably plunge ground to a smooth finish, free from burrs, nicks or scratches which may damage the sealing lip.
The end of the shaft should be chamfered or rounded to prevent lip damage and to ease installation. It is also recommended to apply a coating of a suitable lubricant on the shaft before mounting the seal.

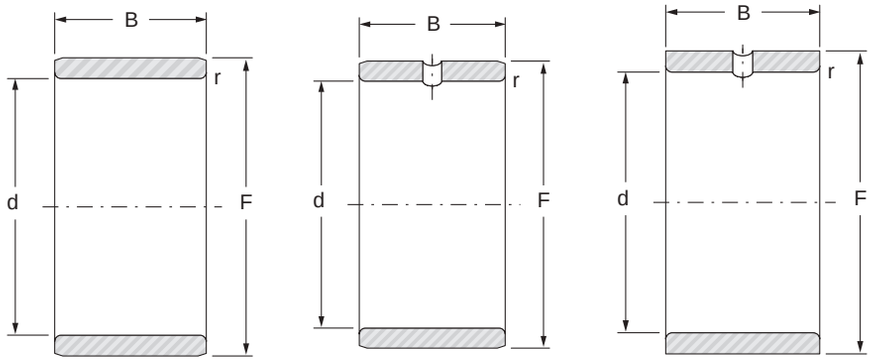

JR JR.JS1 JRZ.JS1

Shaft mm	Designation	d mm	F mm	B mm	$r_{s\ min}$. mm	Weight. kg
5	JR5x8x8JS1	5	8	8	0.3	0.002
	JR5x8x12	5	8	12	0.3	0.003
	JR5x8x16	5	8	16	0.3	0.004
6	JR6x9x8JS1	6	9	8	0.3	0.002
	JR6x9x12	6	9	12	0.3	0.003
	JR6x9x16	6	9	16	0.3	0.004
	JR6x10x10	6	10	10	0.3	0.004
	JR6x10x10JS1	6	10	10	0.3	0.004
	JRZ6x10x12JS1	6	10	12	0.3	0.005
7	JR7x10x10.5	7	10	10.5	0.3	0.003
	JR7x10x12	7	10	12	0.3	0.004
	JR7x10x16	7	10	16	0.3	0.005
8	JR8x12x10	8	12	10	0.3	0.005
	JR8x12x10JS1	8	12	10	0.3	0.005
	JR8x12x10.5	8	12	10.5	0.3	0.005
	JRZ8x12x12JS1	8	12	12	0.3	0.006
	JR8x12x12.5	8	12	12.5	0.3	0.006
	JR8x12x16	8	12	16	0.3	0.007
9	JR9x12x12	9	12	12	0.3	0.005
	JR9x12x16	9	12	16	0.3	0.006
10	JR10x13x12.5	10	13	12.5	0.3	0.005
	JR10x14x11JS1	10	14	11	0.3	0.007
	JR10x14x12	10	14	12	0.3	0.007
	JR10x14x12JS1	10	14	12	0.3	0.007
	JR10x14x13	10	14	13	0.3	0.007
	JRZ10x14x14JS1	10	14	14	0.3	0.008
	JR10x14x16	10	14	16	0.3	0.009
	JR10x14x20	10	14	20	0.3	0.012

INTERNAL RINGS FOR NEEDLE BUSHES

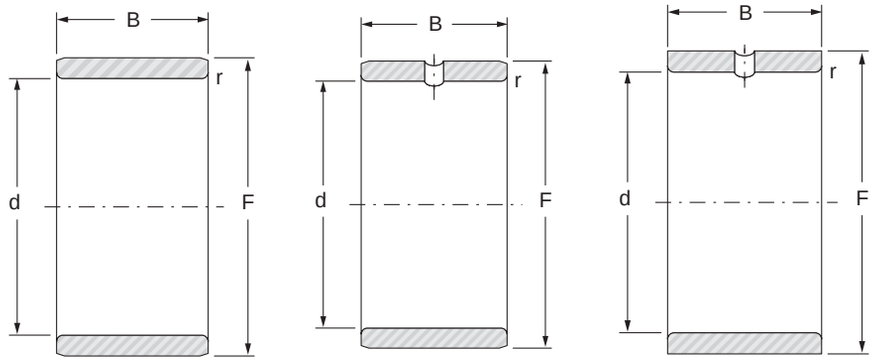

JR JR.JS1 JRZ.JS1

Shaft mm	Designation	d mm	F mm	B mm	$r_{s\ min.}$ mm	Weight. kg
12	JR12x15x12.5	12	15	12.5	0.3	0.006
	JR12x15x16	12	15	16	0.3	0.008
	JR12x15x16.5	12	15	16.5	0.3	0,008
	JR12x15x18.5	12	15	18.5	0.3	0.009
	JR12x15x22.5	12	15	22.5	0.3	0.011
	JR12x16x12	12	16	12	0.3	0.008
	JR12x16x12JS1	12	16	12	0.3	0.008
	JR12x16x13	12	16	13	0.3	0.008
	JRZ12x16x14JS1	12	16	14	0.3	0.010
	JR12x16x16	12	16	16	0.3	0.011
	JR12x16x20	12	16	20	0.3	0.014
	JR12x16x22	12	16	22	0.3	0.015
14	JR14x17x17	14	17	17	0.3	0.009
15	JR15x18x16.5	15	18	16.5	0.3	0.010
	JR15x19x16	15	19	16	0.3	0.013
	JR15x19x20	15	19	20	0.3	0.017
	JR15x20x12	15	20	12	0.3	0.012
	JR15x20x12JS1	15	20	12	0.3	0.012
	JR15x20x13	15	20	13	0.3	0.014
	JRZ15x20x14JS1	15	20	14	0.3	0.015
	JR15x20x16	15	20	16	0.3	0.017
	JR15x20x20	15	20	20	0.35	0.021
	JR15x20x23	15	20	23	0.3	0.025
	JR15x20x26	15	20	26	0.3	0.028

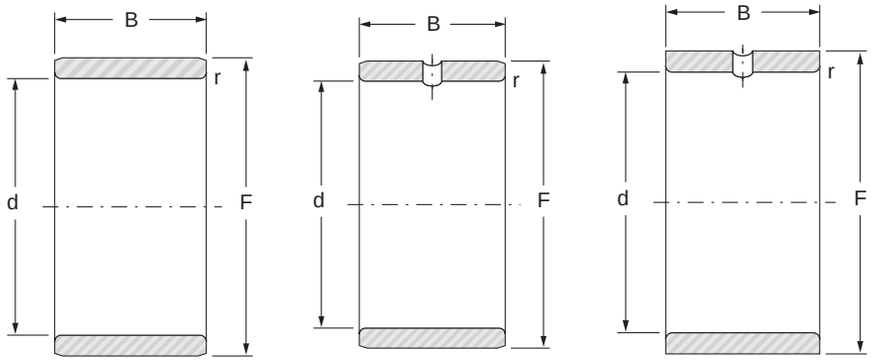

JR JR.JS1 JRZ.JS1

Shaft mm	Designation	d mm	F mm	B mm	$r_{s\ min}$. mm	Weight. kg
17	JR17x20x1&5	17	20	16.5	0.3	0.011
	JR17x20x20	17	20	20	0.3	0.014
	JR17x20x20.5	17	20	20.5	0.3	0.014
	JR17x20x30.5	17	20	30.5	0.3	0.021
	JR17x21x16	17	21	16	0.3	0.015
	JR17x21x20	17	21	20	0.3	0.019
	JR17x22x13	17	22	13	0.3	0.015
	JR17x22x16	17	22	16	0.3	0.019
	JR17x22x16JS1	17	22	16	0.3	0.019
	JRZ17x22x16JS1	17	22	16	0.3	0.019
	JR17x22x20	17	22	20	0.35	0.023
	JR17x22x23	17	22	23	0.3	0.028
	JR17x22x26	17	22	26	0.3	0.031
	JR17x22x32	17	22	32	0.3	0.038
20	JR20x24x16	20	24	16	0.3	0.018
	JR20x24x20	20	24	20	0.3	0.022
	JR20x25x16	20	25	16	0.3	0.022
	JR20x25x16JS1	20	25	16	0.3	0.022
	JR20x25x17	20	25	17	0.3	0.023
	JRZ20x25x18JS1	20	25	18	0.3	0.025
	JR20x25x20	20	25	20	0.3	0.028
	JR20x25x20.5	20	25	20.5	0.3	0.029
	JR20x25x26	20	25	26	0.3	0.036
	JR20x25x26.5	20	25	26.5	0.3	0.037
	JR20x25x30	20	25	30	0.3	0.042
	JR20x25x32	20	25	32	0.3	0.044
	JR20x25x38.5	20	25	38.5	0.3	0.054

INTERNAL RINGS FOR NEEDLE BUSHES

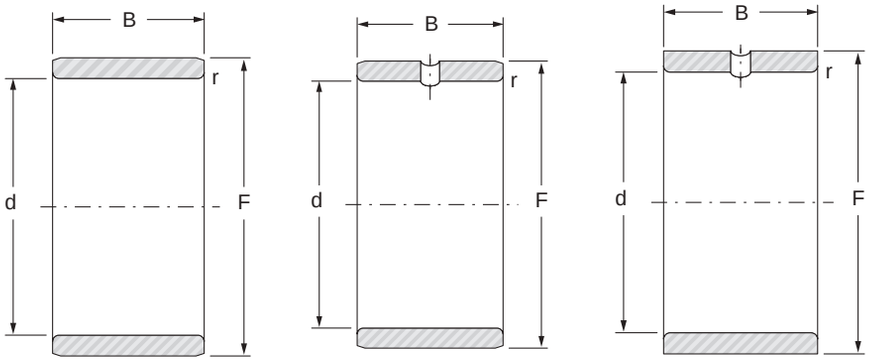

JR JR.JS1 JRZ.JS1

Shaft mm	Designation	d mm	F mm	B mm	$r_{s\ min}$. mm	Weight. kg
22	JR22x26x16	22	26	16	0.3	0.019
	JR22x26x20	22	26	20	0.3	0.023
	JR22x28x17	22	28	17	0.3	0.030
	JR22x28x20.5	22	28	20.5	0.3	0.038
	JR22x28x30	22	28	30	0.3	0.056
25	JR25x29x20	25	29	20	0.3	0.027
	JR25x29x30	25	29	30	0.3	0.040
	JR25x30x16	25	30	16	0.3	0.027
	JR25x30x16JS1	25	30	16	0.3	0.027
	JR25x30x17	25	30	17	0.3	0.028
	JRZ25x30x18JS1	25	30	18	0.3	0.031
	JR25x30x20	25	30	20	0.3	0.034
	JR25x30x20.5	25	30	20.5	0.3	0.035
	JR25x30x26	25	30	26	0.3	0.044
	JR25x30x26.5	25	30	26.5	0.3	0.045
	JR25x30x30	25	30	30	0.3	0.051
	JR25x30x32	25	30	32	0.3	0.054
	JR25x30x38.5	25	30	38.5	0.3	0.066
28	JR28x32x17	28	32	17	0.3	0.028
	JR28x32x20	28	32	20	0.3	0.030
	JR28x32x30	28	32	30	0.3	0.044

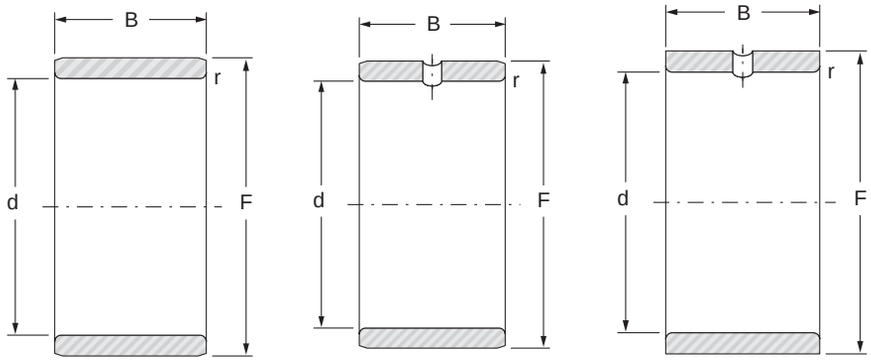

JR JR.JS1 JRZ.JS1

Shaft mm	Designation	d mm	F mm	B mm	$r_{s\ min}$. mm	Weight. kg
30	JR30x35x16	30	35	16	0.3	0.031
	JR30x35x17	30	35	17	0.3	0.033
	JRZ30x35x18JS1	30	35	18	0.3	0.036
	JR30x35x20	30	35	20	0.3	0.039
	JRZ30x35x20JS1	30	35	20	0.3	0.039
	JR30x35x20.5	30	35	20.5	0.3	0.040
	JR30x35x26	30	35	26	0.3	0.054
	JR30x35x30	30	35	30	0.3	0.057
	JR30x35x32	30	35	32	0.3	0.062
	JR30x38x20JS1	30	38	20	0.6	0.067
32	JR32x37x20	32	37	20	0.3	0.043
	JR32x37x30	32	37	30	0.3	0.064
	JR32x40x20	32	40	20	0.6	0.069
	JR32x40x36	32	40	36	0.6	0.128
35	JR35x40x17	35	40	17	0.3	0.040
	JR35x40x20	35	40	20	0.3	0.046
	JR35x40x20.5	35	40	20.5	0.3	0.049
	JR35x40x22	35	40	22	0.3	0.052
	JR35x40x30	35	40	30	0.3	0.071
	JR35x40x34	35	40	34	0.3	0.080
	JR35x40x40	35	40	40	0.3	0.094
	JR35x42x20	35	42	20	0.6	0.065
	JR35x42x20JS1	35	42	20	0.6	0.065
	JRZ35x42x23JS1	35	42	23	0.6	0.074
	JR35x42x36	35	42	36	0.6	0.122
	JR35x44x22	35	44	22	0.6	0.097

INTERNAL RINGS FOR NEEDLE BUSHES

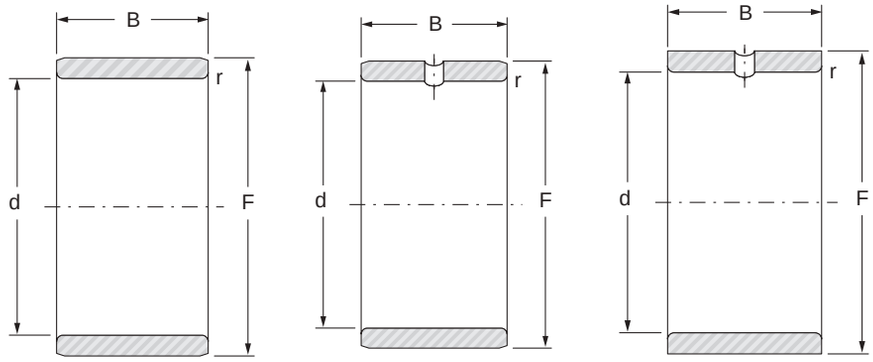

JR JR.JS1 JRZ.JS1

Shaft mm	Designation	d mm	F mm	B mm	$r_{s\ min}$. mm	Weight. kg
37	JR37x42x20	37	42	20	0.35	0.046
38	JR38x43x20	38	43	20	0.3	0.050
	JR38x43x30	38	43	30	0.3	0.075
40	JR40x45x17	40	45	17	0.3	0.044
	JR40x45x20	40	45	20	0.3	0,052
	JR40x45x20.5	40	45	20.5	0.3	0.054
	JR40x45x25	40	45	25	0.35	0.062
	JR40x45x30	40	45	30	0.3	0,078
	JR40x45x34	40	45	34	0.3	0.089
	JR40x45x40	40	45	40	0.3	0.115
	JR40x48x22	40	48	22	0.6	0.094
	JRZ40x48x23JS1	40	48	23	0.6	0.100
	JR40x48x40	40	48	40	0.6	0.173
	JR40x50x20	40	50	20	1	0.110
42	JR42x47x20	42	47	20	0.3	0.055
	JR42x47x30	42	47	30	0.3	0.083
	JR45x50x20	45	50	20	0.3	0.058
45	JR45x50x25	45	50	25	0.6	0.073
	JR45x50x25.5	45	50	25.5	0.3	0.075
	JR45x50x35	45	50	35	0.6	0.103
	JR45x50x40	45	50	40	0.3	0.117
	JR45x52x22	45	52	22	0.6	0.090
	JR45x52x23	45	52	23	0.6	0.096
	JRZ45x52x23JS1	45	52	23	0.6	0.096
	JR45x52x40	45	52	40	0.6	0.167
	JR45x55x20	45	55	20	1	0.133
	JR45x55x20JS1	45	55	20	1	0.133
	JR45x55x22	45	55	22	1	0.135
	JR45x55x40	45	55	40	1	0.247

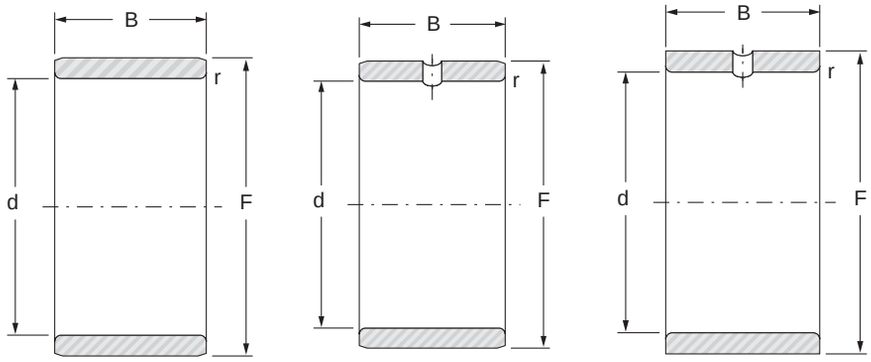

JR JR.JS1 JRZ.JS1

Shaft mm	Designation	d mm	F mm	B mm	$r_{s\ min}$. mm	Weight. kg
50	JR50x55x20	50	55	20	0.3	0.065
	JR50x55x25	50	55	25	0.6	0.081
	JR50x55x35	50	55	35	0.6	0.113
	JR50x55x40	50	55	40	0.3	0.130
	JR50x58x22	50	58	22	0.6	0.117
	JRZ50x58x23JS1	50	58	23	0.6	0.122
	JR50x58x40	50	58	40	0.6	0.213
	JR50x60x20	50	60	20	1	0.155
	JR50x60x20JS1	50	60	20	1	0.155
	JR50x60x25	50	60	25	1	0.170
	JR50x60x40	50	60	40	1	0.310
55	JR55x60x25	55	60	25	0.6	0.088
	JR55x60x35	55	60	35	0.6	0.124

BEARINGS WITH CAGE GUIDED NEEDLES

4

PAGE 70 4.1 TECHNICAL FEATURES

PAGE 72 4.2 BEARING WITH CAGE GUIDED WITH INNER RING

PAGE 74 4.3 BEARING WITH CAGE GUIDED WITHOUT INNER RING

BEARINGS WITH CAGE I GUIDED NEEDLES
TECHNICAL SPECIFICATIONS

Caged needle bearings possess an outer ring made from through-hardened bearing steel. The cage guides, the needles and retains them in the outer ring.
The bearings may be used without an inner ring if the shaft journal serving as a raceway is of sufficient hardness and has the correct surface finish. To ensure that the full load capacity of these bearings is achieved, a hardness of 58-64 HRC is required. A lower hardness will entail a reduction in the load capacities (both dynamic and static) as shown in the table of dimensions (see Technical Section).

CONSTRUCTION
The basic construction of needle bearings are:

- with integral end flanges on the one-piece, channel-shaped outer rings (fw >/ 12 mm)
- with insertd-end washers to prive axial retention of the needle roller and cage assemblies (fw </ 10 mm)

Needle roller bearings with integral flanges
The needle roller bearings has one-piece, channel-shaped outer ring of bearing-quality steel heat treated to yield maximum load rating.
The integral end flanges provide axial location for the needle rollers. the bores of the end flanges serve as piloting surfaces for the cage.
A steel cage provides inward retention for the needle rollers and the design assures roller stability and minimizes friction between the cage and the needle rollers.
The cage has maximum strength consistent with the inherent high- load ratings of needle roller bearings.
The outer ring has a lubricating groove and a lubricating hole for more convenient lubrication of the bearing.
however, the smaller bearings of series **NKJ** (d</ 7 mm) and **NK** (Fw </ 10 mm) do not have lubricating groove or a lubricating hole.

Reference standars are:

- **ISO 1206** - needle roller bearings - Light and medium series - Dimension and tollerances.

Suffixes:

- **TN** - molded cage of engineered, reinforced polymer

TYPES OF BEARINGS
Needle roller bearings with inner rings

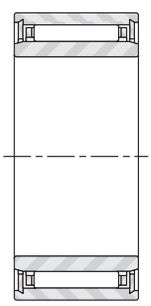

NKJ
(d ≤7 mm)

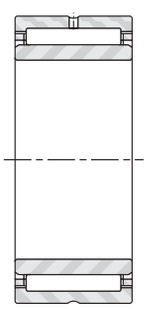

NKJ, NKJS
(d ≥9 mm)

Needle roller bearings without inner rings

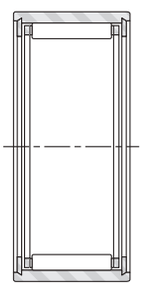

NK
(Fw ≤ 10 mm)

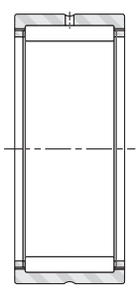

NK, NKS
(Fw ≥ 12 mm)

Needle roller bearings with inner rings

When it is impractical to finish the shaft to meet the desired raceway design requirements, an inner ring may be used. Standard needle roller bearings are available with inner rings to form complete bearings. Bearings furnished with inner rings meet the quality requirements in accordance with ISO standards.

- For inner- and outer - ring tolerances, the bearings follow the normal tolerance class in **ISO Standard 492** covering radial bearings. Bearings to more precise tolerance classes, P6 and P5, may be obtained upon request (see tables at the end of the catalogue).
- These bearings may be obtained with radial internal clearance in accordance with **ISO Standard 5753**, also specified for cylindrical roller bearings. Mostly, they follow the normal (CO) radial clearance group, although bearings to clearance groups C2, C3 and C4 may be made available on request (see tables at the end of the catalogue).
- Inner ring and outer ring chamfer dimensions meet the requirements of **ISO Standard 582**.

Needle roller bearings without inner rings

Whenever the shaft can be used as the inner raceway, needle roller bearings without inner rings provide advantages of economy and close control of radial internal clearance in operation. Tolerance class F6 is the normal specification for the needle roller complement bore diameter of an unmounted bearing, as shown in Table 1.

Table 1 - Caged needle roller complement bore diameter for bearings without inner ring

F_w mm		ΔF_w min µm	
>	≤	low	high
-	6	+10	+18
6	10	+13	+22
10	18	+16	+27
18	30	+20	+33
30	50	+25	+41
50	80	+30	+49
80	120	+36	+58
120	180	+43	+68
180	250	+50	+79
250	315	+56	+88
315	400	+62	+98

BEARING MOUNTING

General requirements

In general the mounting of needle roller bearings with or without inner rings, of normal precision, requires the shaft seat or raceway to be machined to quality IT5 or IT6. The housing bore should meet quality IT6 or IT7.
Other quality requirements for shafts and housings are given on page 13.

Mounting dimensions

It is suggested that needle roller bearings are mounted in their housings with a clearance fit, if the load is stationary relative to the housing, or with a tight transition fit, if the load rotates relative to the housing.
Table 2 lists the suggested tolerances for the housing bore and the shaft raceway for bearings without inner rings.
Table 3 lists the suggested shaft tolerances for the above two mounting conditions when the bearings are used with inner rings.
Other mounting dimensions may be required for special operating conditions such as:
1. Extremely heavy radial loads.
2. Shock loads.
3. Temperature gradient across bearing.
4. Housing material with heat expansion coefficient different than that of the bearing.
5. Oscillating motion applications.

Table 2 - Mounting tolerances for bearings without inner ring

Rotation conditions	Nominal housing bore diameter D mm	ISO tolerance zone for housing	Nominal shaft diameter F mm	ISO tolerance zone for shaft
Load stationary relative to housing	All diameters	H7 (J7)	All diameters	h6
General work with lerger clearance	All diameters	K7	All diameters	g6
Load rotates relative to housing	All diameters	N7	All diameters	f6

BEARINGS WITH CAGE | GUIDED NEEDLES
WITH INNER RING

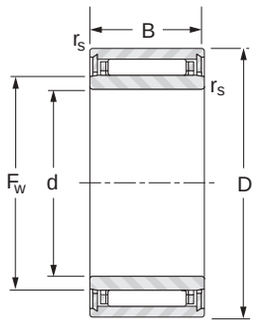

NKJ (d ≤ 7)

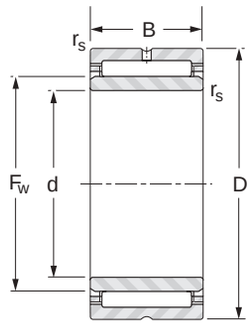

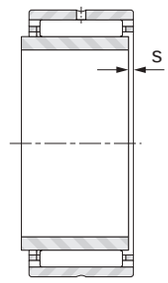

NKJ, NKJS

Shaft mm	Designation	d mm	D mm	B mm	F_w mm	$r_{s\ min.}$ mm	s(1) mm	Load ratings kN Dynamic C	Load ratings kN Static C_0	Speed ratings kN min^{-1} Oil	Speed ratings kN min^{-1} Grease	Weight. kg
5	NKJ5/12	5	15	12	8	0.3	1.5	4.57	4.89	41.000	26000	0.014
	NKJ5/16	5	15	16	8	0.3	1.5	5.22	5.78	41.000	26000	0.017
6	NKJ6/12	6	16	12	9	0.3	1.5	4.27	4.60	40000	26000	0.015
	NKJ6/16	6	16	16	9	0.3	1 .5	5.57	6.47	40.000	26000	0.019
7	NKJ7/12	7	17	12	11.5	0.3	1.5	5.40	6.43	39.000	25000	0.017
	NKJ7/16TN	7	17	16	11.5	0.3	1.5	5.30	6.27	39.000	25000	0.021
9	NKJ9/12	9	19	12	12	0.3	1.5	6.86	7.60	30.000	19000	0.018
	NKJ9/16	9	19	16	12	0.3	1.5	6.78	9.03	30.000	19000	0.024
10	NKJ10/16	10	22	16	14	0.6	1.5	12.4	14.8	24.000	16000	0.032
	NKJ10/20	10	22	20	14	0.3	1.5	14.7	18.4	24.000	16000	0.040
12	NKJ12/16	12	24	16	16	0.3	1.5	13.0	16.2	28.000	18000	0.036
	NKJ12/20	12	24	20	16	0.3	1.5	15.4	20.2	28.000	18000	0.046
15	NKJ15/16	15	27	16	19	0.3	1.5	14.1	19.0	24.000	15000	0.042
	NKJ15/20	15	27	20	19	0.3	1.5	16.8	23.6	24.000	15000	0.054
17	NKJ17/16	17	29	16	21	0.3	2.0	15.3	21.6	21.000	14000	0.047
	NKJ17/20	17	29	20	21	0.3	1.5	18.1	23.9	21.000	14000	0.059
	NKJS17	17	37	20	24	0.6	1.0	29.1	32.8	20.000	13000	0.108
20	NKJ20/16	20	32	16	24	0.3	1.5	16.2	24.3	18.000	12000	0.053
	NKJ20/20	20	32	20	24	0.3	1.5	19.3	30.3	18.000	12000	0.067
	NKJS20	20	42	20	28	0.6	1.0	30.3	38.4	16.000	11000	0.130
22	NKJ22/16	22	34	16	26	0.3	1.5	16.6	25.7	17.000	11000	0.058
	NKJ22/20	22	34	20	26	0.3	2.0	19.7	32.0	17.000	11000	0.071
25	NKJ25/20	25	38	20	29	0.3	2.0	23.4	36.4	15.000	9800	0.086
	NKJ25/30	25	38	30	29	0.3	2.0	29.8	56.4	15000	9800	0.130
	NKJS25	25	47	22	32	0.6	1.5	36.0	36.2	14000	9200	0.174
28	NKJ28/20	28	42	20	32	0.3	2.0	24.8	40.4	14000	8800	0.104
	NKJ28/30	28	42	30	32	0.3	2.0	35.6	64.3	14000	8800	0.156

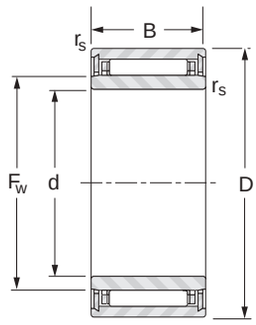

NKJ (d ≤ 7)

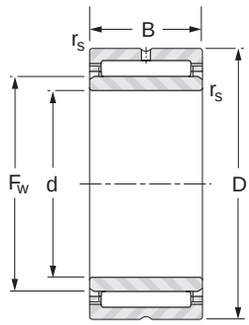

NKJ, NKJS

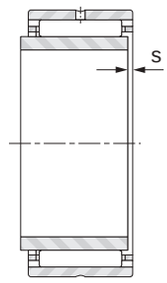

Shaft mm	Designation	d mm	D mm	B mm	F_w mm	$r_{s\ min.}$ mm	s(1) mm	Load ratings kN Dynamic C	Load ratings kN Static C_0	Speed ratings kN min^{-1} Oil	Speed ratings kN min^{-1} Grease	Weight. kg
30	NKJ30/20	30	45	20	35	0.3	1.5	26.1	44.4	12000	8000	0.120
	NKJ30/30	30	45	30	35	0.3	1.5	37.4	70.6	12000	8000	0.179
	NKJS30	30	52	22	37	0.6	1.5	39.0	53.4	12000	7900	0 198
32	NKJ32/20	32	47	20	37	0.3	2.0	26.6	46.4	12000	7600	0.127
	NKJ32/30	32	47	30	37	0.3	1.5	38.2	73.9	12000	7600	0.192
35	NKJ35/20	35	50	20	40	0.3	2.0	27.8	50.4	11000	7000	0.135
	NKJ35/30	35	50	30	40	0.3	1.5	40.0	80.2	11000	7000	0.208
	NKJS35	35	58	22	43	0.6	1.0	41.6	60.7	10000	6700	0.235
38	NKJ38/20	38	53	20	43	0.3	2.0	29.0	54.4	9900	6400	0.146
	NKJ38/30	38	53	30	43	0.3	1.5	41.6	86.6	9900	6400	0.196
40	NKJ40/20	40	55	20	45	0.3	2.0	29.5	56.4	9400	6100	0.152
	NKJ40/30	40	55	30	45	0.3	1.5	42.3	89.8	9400	6100	0.229
	NKJS40	40	65	22	50	1.0	1.0	45.5	71.3	8700	5700	0.292
42	NKJ42/20	42	57	20	47	0.3	2.0	30.0	58.5	9000	5900	0.159
	NK,I42/30	42	57	30	47	0.3	1.5	39.9	84. ι	9000	5900	0.241
45	NKJ45/25	45	62	25	50	0.6	3.0	40.7	79.3	8500	5500	0.223
	NKJ45/35	45	62	35	50	0.6	3.0	55.0	117	8500	5500	0.345
	NKJS45	45	72	22	55	1.0	1.0	47.9	78.4	7900	5100	0.360
50	NKJ50/25	50	68	25	55	0.6	3.0	46.1	87.3	7800	5000	0.288
	NKJ50/35	50	68	35	55	0.6	3.0	62.3	129	7800	5000	0.406
	NKJS50	50	80	28	60	1.1	1.5	66.9	103	7300	4800	0.523
55	NKJ55/25	55	72	25	60	0.6	3.0	44.3	94.0	7000	4600	0.290
	NKJ55/35	55	72	35	60	0.6	3.0	59.9	139	7000	4600	0.410
	NKJS55	55	85	28	65	1.1	1.5	71 .o	114	6700	4400	0.569
60	NKJ60/25	60	82	25	68	0.6	2.0	49.0	101	6200	4000	0.440
	NKJ60/35	60	82	35	68	0.6	2.5	66.2	149	6200	4000	0.520
	NKJS60	60	90	28	70	1.1	1.5	72.6	120	6200	4000	0.607

BEARINGS WITH CAGE | GUIDED NEEDLES
WITH INNER RING

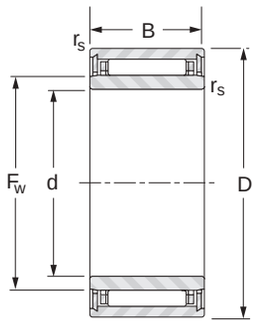

NKJ (d ≤ 7)

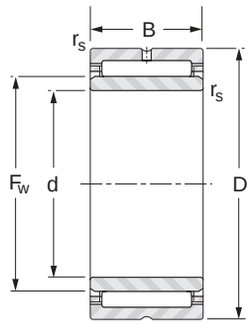

NKJ, NKJS

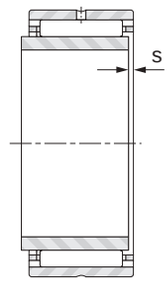

Shaft mm	Designation	d mm	D mm	B mm	F_w mm	$r_{s\ min.}$ mm	s(1) mm	Load ratings kN		Speed ratings kN min^{-1}		Weight. kg
								Dynamic	Static			
								C	C_0	Oil	Grease	
65	NKJ65/25	65	90	25	73	0.6	2.0	61.5	119	5800	3800	0.500
	NKJ65/35	65	90	35	73	0.6	2.0	82.5	173	5800	3800	0.690
	NKJS65	65	95	28	75	1.1	1.5	76.5	132	5800	3700	0.655
70	NKJ70/25	70	95	25	80	1.0	2.0	65.0	131	5300	3400	0.561
	NKJ70/35	70	95	35	80	1.0	3.5	79.7	184	5300	3400	0.779
	NKJS70	70	100	28	80	1.1	1.5	80.1	143	5400	3500	0.772
75	NKJ75/25	75	105	25	85	1.0	2.0	76.4	137	5000	3300	0.640
	NKJS75	75	105	32	90	1.1	1.5	91.5	176	4700	3100	0.060
	NKJ75/35	75	105	35	85	1.0	2.0	108	214	5000	3300	0.050
80	NKJ80/25	80	110	25	90	1.0	2.0	79.5	147	4700	3100	0.790
	NKJS80	80	110	32	95	1.1	2.0	95.1	188	4500	2900	1.140
	NKJ80/35	80	110	35	90	1.0	2.0	113	230	4700	3100	0.980
85	NKJ85/26	85	115	26	95	1.0	3.0	49.3	114	4400	2800	0.862
	NKJ85/36	85	115	36	95	1.0	2.0	114	238	4400	2800	1.040
90	NKJ90/26	90	120	26	100	1.0	3.0	83.6	163	4200	2800	0.780
	NKJ90/36	90	120	36	100	1.0	2.5	118	254	4200	2800	1.080
95	NKJ95/26	95	125	26	105	1.0	2.5	52.2	127	3900	2600	0.935
	NKJ95/36	95	125	36	105	1.0	3.5	72.8	195	3900	2600	1.300
100	NKJ100/30	100	130	30	110	1.1	2.0	103	220	3800	2500	0.984
	NKJ100/40	100	130	40	110	1.1	2.0	132	301	3800	2500	1 .410
	NKJS100	100	135	32	115	1.1	2.0	104	226	3700	2400	2.010

BEARINGS WITH CAGE | GUIDED NEEDLES WITHOUT INNER RING

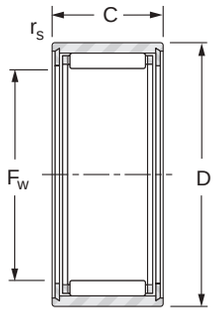

NK (Fw ≤ 10)

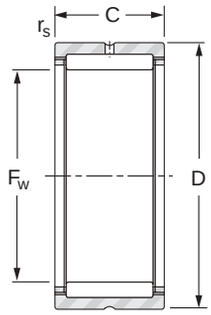

NK, NKS

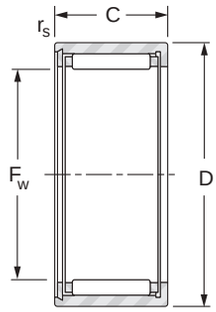

NKTN

Shaft mm	Designation	F_w mm	D mm	C mm	$r_{s\ min.}$ mm	Load ratings kN		Speed ratings kN min^{-1}		Weight. kg
						Dynamic	Static			
						C	C_0	Oil	Grease	
5	NK5/10TN	5	10	10	0.2	2.18	1.71	47000	31000	0.004
	NK5/I2TN	5	10	12	0.2	3.04	2.63	47000	31000	0.004
6	NK6/10	6	12	10	0.2	3.19	2.90	44000	29000	0.005
	NK6/12TN	6	12	12	0.2	3.07	2.74	44000	29000	0.006
7	NK7/10TN	7	14	10	0.3	2.74	2.44	42000	28000	0.007
	NK7/12TN	7	14	12	0.3	3.40	3.22	42000	28000	0.009
8	NK8/12	8	15	12	0.3	4.57	4.89	41000	26000	0.011
	NK8/I6	8	15	16	0.3	5.22	5.78	41000	26000	0.013
9	NK9/12	9	16	12	0.3	4.27	4.60	40000	26000	0.012
	NK9/16	9	16	16	0.3	5.57	6.47	40000	26000	0.015
10	NK10/12	10	17	12	0.3	5.40	6.43	39000	25000	0.013
	NK10/16TN	10	17	16	0.3	5.30	6.27	39000	25000	0.015
12	NK12/12	12	19	12	0.3	6.86	7.60	30000	19000	0.013
	NK12/16	12	19	16	0.3	6.78	9.03	37000	24000	0.018
14	NK14/16	14	22	16	0.3	12.4	14.8	24000	16000	0.023
	NK14/20	14	22	20	0.3	14.7	18.4	24000	16000	0.028
15	NK15/16	15	23	16	0.3	12.4	15.0	24000	15000	0.024
	NK15/20	15	23	20	0.3	14.7	18.6	24000	15000	0.031
16	NK16/16	16	24	16	0.3	15.4	20.2	28000	18000	0.025
	NK16/20	16	24	20	0.3	16.1	21.3	28000	18000	0.036
17	NK17/16	17	25	16	0.3	13.6	17.5	27000	17000	0.027
	NK17/20	17	25	20	0.3	15.4	20.4	27000	17000	0.034
18	NK18/16	18	26	16	0.3	13.6	17.7	25000	16000	0.028
	NK18/20	18	26	20	0.3	16.1	22.0	25000	16000	0.035
19	NK19/16	19	27	16	0.3	14.1	19.0	24000	15000	0.029
	NK19/20	19	27	20	0.3	18.8	23.6	24000	15000	0.037
	NKS19	19	30	16	0.3	15.9	16.2	26000	17000	0.045

BEARINGS WITH CAGE | GUIDED NEEDLES
WITHOUT INNER RING

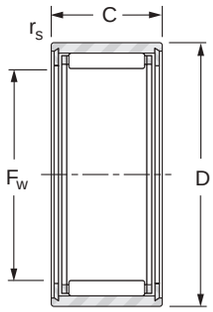

NK (Fw ≤ 10)

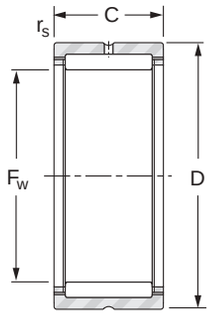

NK, NKS

Shaft mm	Designation	F_w mm	D mm	C mm	$r_{s\ min.}$ mm	Load ratings kN		Speed ratings kN min^{-1}		Weight. kg
						Dynamic	Static			
						C	C_0	Oil	Grease	
20	NK20/16	20	28	16	0.3	14.1	19.1	22000	14000	0.030
	NK20/20	20	28	20	0.3	17.5	25.3	22000	14000	0.038
	NKS20	20	32	20	0.6	24.4	26.7	24000	15000	0.058
21	NK21/16	21	29	16	0.3	15.3	21.6	21000	14000	0.032
	NK21/20	21	29	20	0.3	18.1	26.9	21000	14000	0.040
22	NK22/16	22	30	16	0.3	15.2	21.7	20000	13000	0.033
	NK22/20	22	30	20	0.3	18.0	27.0	20000	13000	0.041
	NKS22	22	35	20	0.6	22.9	27.1	21000	14000	0.069
24	NK24/16	24	32	16	0.3	16.2	24.3	18000	12000	0.035
	NK24/20	24	32	20	0.3	19.3	30.3	18000	12000	0.045
	NKS24	24	37	20	0.6	29.1	32.8	20000	13000	0.073
25	NK25/16	25	33	16	0.3	16.1	24.4	17000	11000	0.037
	NK25/20	25	33	20	0.3	19.1	30.4	17000	11000	0.047
	NKS25	25	38	20	0.6	29.1	33.0	19000	12000	0.076
26	NK26/16	26	34	16	0.3	16.6	25.7	17000	11000	0.039
	NK26/20	26	34	20	0.3	19.7	32.0	17000	11000	0.048
28	NK28/20	28	37	20	0.3	22.6	34.4	16000	11000	0.057
	NK28/30	28	37	30	0.3	29.0	53.8	16000	11000	0.088
	NKS28	28	42	20	0.6	30.3	38.4	16000	11000	0.094
29	NK29/20	29	38	20	0.3	23.4	36.4	15000	9800	0.059
	NK29/30	29	38	30	0.3	29.8	56.4	15000	9700	0.090
30	NK30/20	30	40	20	0.3	24.2	38.3	15000	9500	0.071
	NK30/30	30	40	30	0.3	34.7	61.0	15000	9500	0.107
	NKS30	30	45	20	0.6	34.3	42.8	15000	9900	0.114
32	NK32/20	32	42	20	0.3	24.8	40.4	14000	8800	0.074
	NK32/30	32	42	30	0.3	35.6	64.3	14000	8800	0.112
	NKS32	32	47	22	0.6	36.0	46.2	14000	9200	0.120
35	NK35/20	35	45	20	0.3	26.1	44.4	12000	8000	0.081
	NK35/30	35	45	30	0.3	37.4	70.6	12000	8000	0.122
	NKS35	35	50	22	0.6	37.5	49.9	13000	8400	0.130

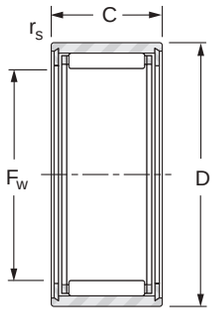

NK (Fw ≤ 10)

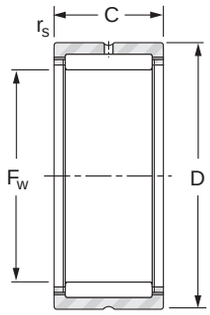

NK, NKS

Shaft mm	Designation	F_w mm	D mm	B mm	$r_{s\ min.}$ mm	Load ratings kN		Speed ratings kN min^{-1}		Weight. kg
						Dynamic	Static			
						C	C_0	Oil	Grease	
37	NK37/20	37	47	20	0.3	26.6	46.4	12000	7600	0.084
	NK37/30	37	47	30	0.3	38.2	73.9	12000	7600	0.128
	NKS37	37	52	22	0.6	39.0	53.4	12000	7900	0.134
38	NK38/20	38	48	20	0.3	21.7	40.9	11000	7300	0.087
	NK38/30	38	48	30	0.3	31.9	67.0	11000	7300	0.131
40	NK40/20	40	50	20	0.3	27.8	50.4	11000	7000	0.089
	NK40/30	40	50	30	0.3	40.0	80.2	11000	7000	0.137
	NKS40	40	55	22	0.6	40.3	57.0	11000	7200	0.140
42	NK42/20	42	52	20	0.3	28.3	52.4	10000	6600	0.085
	NK42/30	42	52	30	0.3	40.7	83.5	10000	6600	0.141
43	NK43/20	43	53	20	0.3	29.0	54.4	9900	6400	0.096
	NK43/30	43	53	30	0.3	41.6	86.6	9900	6400	0.134
	NKS43	43	58	22	0.6	41.6	60.7	ι 0000	6700	0.150
45	NK45/20	45	55	20	0.3	29.5	56.4	9400	6100	0.100
	NK45/30	45	55	30	0.3	42.3	89.8	9400	6100	0.151
	NKS45	45	60	22	0.6	43.0	64.2	9800	6400	0.156
47	NK47/20	47	57	20	0.3	30.0	58.5	9000	5900	0.104
	NK47/30	47	57	30	0.3	43.0	93.1	9000	5900	0.158
50	NK50/25	50	62	25	0.3	40.7	79.3	8500	5500	0.171
	NK50/35	50	62	35	0.6	55.0	117	8500	5500	0.242
	NKS50	50	65	22	1.0	45.5	71.3	8700	5700	0.170
55	NK55/25	55	68	25	0.6	46.1	87.3	7800	5000	0.207
	NK55/35	55	68	35	0.6	62.3	129	7800	5000	0.293
	NKS55	55	72	22	1.0	47.9	78.4	7900	5100	0.225
60	NK60/25	60	72	25	0.6	44.3	94.0	7000	4400	0.202
	NK60/35	60	72	35	0.6	59.9	139	7000	4400	0.286
	NKS60	60	80	28	1.1	66.9	103	7300	4800	0.337
65	NK65/25	65	78	25	0.6	48.2	97.7	6500	4200	0.257
	NK65/35	65	78	35	0.6	65.2	144	6500	4200	0.298
	NKS65	65	85	28	1.1	71.0	114	6700	4200	0.362

BEARINGS WITH CAGE | GUIDED NEEDLES
WITHOUT INNER RING

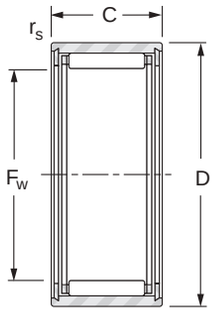

NK (Fw ≤ 10)

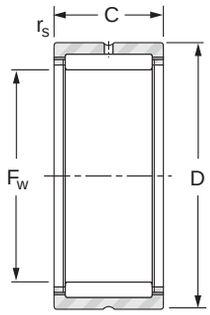

NK, NKS

Shaft mm	Designation	F_w mm	D mm	B mm	$r_{s\ min.}$ mm	Load ratings kN		Speed ratings kN min^{-1}		Weight. kg
						Dynamic	Static			
						C	C_0	Oil	Grease	
68	NK68/25	68	82	25	0.6	49.0	101	6200	4000	0.287
	NK68/35	68	82	35	0.6	66.2	149	6200	4000	0.350
70	NK70/25	70	85	25	0.6	43.6	87.9	6000	3900	0.298
	NK70/35	70	85	35	0.6	62.2	139	6000	3900	0.411
	NKS70	70	90	28	1.1	72.6	120	6200	4000	0.383
73	NK73/25	73	90	25	0.6	61.5	119	5800	3800	0.320
	NK73/35	73	90	35	0.6	82.5	173	5800	3800	0.450
75	NK75/25	75	92	25	0.6	43.7	90.2	5600	3600	0.364
	NK75/35	75	92	35	0.6	60.9	138	5600	3600	0.518
	NKS75	75	95	28	1.1	76.5	132	5800	3700	0.413
80	NK80/25	80	95	25	1.0	65.0	131	5300	3400	0.331
	NK80/35	80	95	35	1.0	79.7	184	5300	3400	0.380
85	NK85/25	85	105	25	1.0	76.4	137	5000	3300	0.506
	NK85/35	85	105	35	1.0	108	214	5000	3300	0.610
90	NK90/25	90	110	25	1.0	79.5	147	4700	3100	0.450
	NK90/35	90	110	35	1.0	113	230	4700	3100	0.745
95	NK95/26	95	115	26	1.0	49.3	114	4400	2800	0.572
	NK95/36	95	115	36	1.0	114	238	4500	2900	0.803
100	NK100/26	100	120	26	1.0	83.6	163	4200	2800	0.530
	NK100/36	100	120	36	1.0	118	254	4200	2800	0.658
105	NK105/26	105	125	26	1.0	52.2	127	3900	2600	0.595
110	NK110/30	110	130	30	1.1	103	220	3800	2500	0.660
	NK110/40	110	130	40	1.1	132	301	3800	2500	0.900

4.3

FULL COMPLEMENT NEEDLE BEARINGS

5

PAGE 82 5.1 TECHNICAL SPECIFICATIONS

PAGE 96 5.2 FULL COMPLEMENT NEEDLE BEARINGS WITH INNER RING

FULL COMPLEMENT NEEDLE BEARINGS
TECHNICAL SPECIFICATIONS

Full complement needle bearings have a through hardened outer ring which results in high static and dynamic load capacities and an ability to withstand overloading, shocks and vibration.
They are particularly suitable for operations involving oscillating motion but may also accept high speed conditions where good alignment is necessary.
This can more easily be achieved using a convex inner ring raceway (inner rings with suffix R6).
The retention of the needles in the outer ring enables the bearing to be installed easily during assembly.
The difference between the needle bearings with integral end flanges series 3000 and the others is explained in the Chapter of the Bearings with cages.

These bearings are available with or without an inner ring from 12 mm bore size. Standard complete bearings type **NA** have an inner ring with convex raceway form.
If extra wide inner rings or rings with lubrication hole are required, they should be ordered separately for use with the corresponding **RNA** series.

Reference standards are:

- **ISO 1206** - Needle roller bearings – Light and medium-series – Dimensions and tolerances.

FULL COMPLEMENT BEARINGS WITHOUT INNER RING

The shaft journal which is used directly as the inner ring raceway of the bearing should have adequate hardness and satisfactory surface finish.
A hardness of 58-64 HRC will ensure full load capacity for the bearing. Lower hardness figures will entail a reduction in both static and dynamic capacities as shown in the table of dimensions (see Technical Section).
In cases of misalignment, a convex inner ring raceway can be machined directly at the shaft journal position by grinding, using a concave profile and inclining the diamond impregnated grinding wheel.
A convex inner ring raceway calculated to permit misalignment of 1 in 1000 does not affect bearing load capacity. A larger convex radius is necessary for a greater degree of misalignment but this will reduce the effective bearing load capacity.

TYPES OF BEARINGS
Needle roller bearings with inner rings

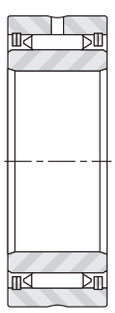

NA Serie 1000, 2000, 22000

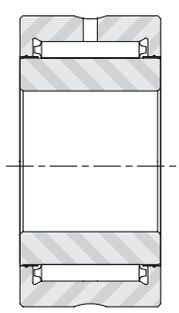

NA Serie 3000

Needle roller bearings without inner rings

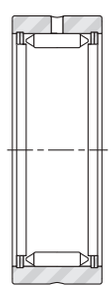

RNA Serie 1000, 2000, 22000

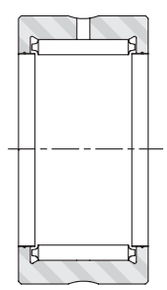

RNA Serie 3000

INNER RINGS

Inner rings made from high quality bearing steel heat treated and through-hardened avoid any necessity for heat treatment of the shaft and enable the bearings to operate within their full load capacity.

Inner rings with convex raceway "R6"

The inner rings without lubrication hole are of the same width as the outer ring and are supplied with series **NA** complete, types **1000**, **2000**, **22000** and **3000**. They can accept a misalignment of 1 in 1000 in continuous operation and up to 2 in 1000 temporarily, as in the case of sudden deflection due to overload conditions. The inner and outer rings may be displaced axially from one to the other by up to 5% of the ring width. The designation of the inner ring separated from the complete needle bearing is BI number R6. For example BI 2020 R6. The designation of the needle bearings complete of inner ring BI…R6 is NA number.
For example NA 2035.

Inner rings with cylindrical raceway

Cylindrical inner rings of the same bore as those with convex raceway may be supplied on request in the following versions:

- with oil hole permitting lubrication through the shaft (BIC).
- wider than corresponding outer ring (BICG), to enable a displacement in position of one ring relative to the other (e.g. Expansion of the shaft) or lateral shaft movement. In the latter case, which can occur with or without simultaneous rotation of the shaft, please consult Nadella Technical Service.

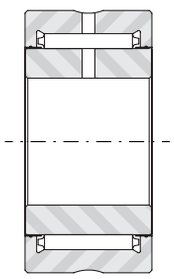

BIC

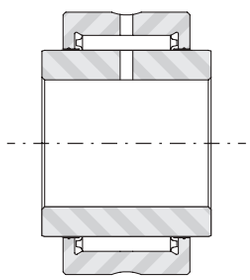

BICG

The use of cylindrical inner rings with standard bearings type **RNA** series **1000**, **2000**, **22000** and **3000** requires that the housing and shaft be correctly aligned at assembly with due regard to the application under load.
If it is not essential to use these inner rings, it is always preferable to use complete bearings type **NA** with convex inner rings type "**R6**", without oil hole, of the same width as the outer ring. In particular cases where lubrication is provided through the shaft, the inner ring with oil hole may be replaced by a lubrication hole at the face of the inner ring.

RING TOLERANCES

Inner and outer rings for full complement standard needle bearings are manufactured in accordance with the tolerance class of ISO Standard 492 (class zero according to DIN 620). Closer tolerances, corresponding to classes 6, 5 and 4 may be necessary for special high precision applications (symbols P6, P5, P4).
See table at the end of the catalogue.

RADIALPLAY

Bearings without inner ring

The radial play of a bearing without inner ring results from the difference in diameter beneath the needles and the size of the shaft. The standard diameter beneath the needles for **RNA** bearings with the recommended shaft tolerances should provide suitable radial play for most normal applications.
For special applications (high precision, close fits, etc.), we can offer the diameter beneath the needles selected as follows:

- In the bottom half of the normal tolerance (**RNA ... TB**)
- In the upper half of the normal tolerance (**RNA...TC**).

Bearings without inner ring tolerance Class **TB** mounted on a shaft with k5 tolerance will have a reduced radiai play suitable for certain applications.

Nominal dimension F_w mm		Tolerance of diameter under needles		
		Normal µm	Selected TB µm	Selected TC µm
Above	To			
5	15	+20 + 40	+20 +31	+ 29 + 40
15	25	+20 + 43	+20 +33	+ 30 + 43
25	30	+25 + 48	+25 +38	+ 35 + 48
30	35	+30 + 53	+30 + 43	+ 40 + 53
35	60	+35 + 58	+35 + 48	+ 45 + 58
60	80	+45 + 73	+45 + 60	+ 58 + 73
80	115	+50 + 78	+50 + 65	+ 63 + 78
115	180	+60 + 88	+60 + 75	+ 73 + 88
180	220	+70 +103	+70 + 88	+ 85 +103
220	270	+80 +113	+80 + 98	+ 95 +113
270	350	+90 +128	+90 +110	+108 +128
Examples of bearing		RNA 1020	RNA 1020 TB	RNA 1020 TC

FULL COMPLEMENT NEEDLE BEARINGS
TECHNICAL SPECIFICATIONS

Standard complete bearings with inner ring
Complete bearings type NA are offered with a radial play that is suitable for the majority of applications.
They can be supplied if necessary:

- with the radial play selected from the bottom half of the normal tolerance (NA...TB)
- with the radial play selected from the upper half of the normal tolerance (NA…TC).

For bore dimensions d > 130 mm, bearings NA…TB or NA…TC are supplied only on special request.

Radial play of full complement bearings with convex inner ring "R6"

Series 1000, 2000, 22000

Inner ring dimension d mm		Standard play µm		Selected TB µm		Selected TC µm	
Above	To	Min.	Max.	Min.	Max.	Min.	Max.
12	20	20	50	20	35	35	50
20	25	25	60	25	43	42	60
25	30	30	65	30	48	47	65
30	50	35	70	35	53	52	70
50	55	45	85	45	65	65	85
55	65	45	90	45	68	67	90
65	70	45	95	45	70	70	95
70	105	50	100	50	75	75	100
105	125	60	115	60	88	87	115
120	140	80	145	80	113	112	145
140	170	100	165	-	-	-	-
170	190	120	185	-	-	-	-
190	210	130	200	-	-	-	-
210	230	130	205	-	-	-	-
230	260	160	235	-	-	-	-
260	290	180	260	-	-	-	-
290	310	180	265	-	-	-	-

Series 3000

Inner ring dimension d mm		Standard play µm		Selected TB µm		Selected TC µm	
Above	To	Min.	Max.	Min.	Max.	Min.	Max.
30	45	35	70	35	53	52	70
45	55	45	85	45	65	65	85
55	65	45	90	45	68	67	90
65	70	50	95	50	73	72	95
70	100	50	100	50	75	75	100
100	105	60	110	60	85	85	110
105	130	60	115	60	88	87	115
130	140	80	145	80	113	112	145
140	170	100	165	-	-	-	-
170	190	120	185	-	-	-	-
190	210	130	200	-	-	-	-
210	230	130	200	-	-	-	-
230	260	160	235	-	-	-	-
260	290	180	260	-	-	-	-
290	310	180	265	-	-	-	-

Radial play of full complement bearings with cylindrical inner ring (not R6)

Series 1000, 22000

Inner ring dimension d mm		Standard play µm		Selected TB µm		Selected TC µm	
Above	To	Min.	Max.	Min.	Max.	Min.	Max.
12	17	20	50	20	35	35	50
17	20	30	60	30	45	45	60
20	25	35	70	35	53	52	70
25	30	40	75	40	58	57	75
30	35	45	80	45	63	62	80
35	50	50	85	50	68	67	85
50	55	60	100	60	80	80	100
55	65	60	105	60	83	82	105
65	70	60	110	60	85	85	110
70	90	65	115	65	90	90	115

Series 2000

Inner ring dimension d mm		Standard play µm		Selected TB µm		Selected TC µm	
Above	To	Min.	Max.	Min.	Max.	Min.	Max.
15	20	30	60	30	45	45	60
20	25	35	70	35	53	52	70
25	30	40	75	40	58	57	75
30	35	45	80	45	63	62	80
35	50	50	85	50	68	67	85
50	55	60	100	60	80	80	100
55	65	60	105	60	83	82	105
65	70	60	110	60	85	85	110
70	105	65	115	65	90	90	115
105	125	75	130	75	103	102	130

Series 3000

Inner ring dimension d mm		Standard play µm		Selected TB µm		Selected TC µm	
Above	To	Min.	Max.	Min.	Max.	Min.	Max.
30	45	50	85	50	68	67	85
45	55	60	100	60	80	80	100
55	65	60	105	60	83	82	105
65	70	65	110	65	88	87	110
70	100	65	115	65	90	90	115
100	105	75	125	75	100	100	125
105	130	75	130	75	103	102	130
130	140	95	160	95	128	127	160
140	170	125	190	-	-	-	-
170	190	145	210	-	-	-	-
190	210	160	230	-	-	-	-

BEARING MOUNTING

General requirements

In general, the mounting of needle roller bearings with or without inner rings, of normal precision, requires the shaft seat or raceway to be machined to quality IT5 or IT6. The housing bore should meet quality IT6 or IT7.

Other quality requirements for shaft and housings are given on page 13.

MOUNTING DIMENSIONS

It is recommended that needle roller bearings are mounted in their housings with a clearance fit if the load is stationary relative to the housing, and with a tight transition fit if the load rotates relative to the housing.

Table 2- Mounting tolerances for bearings without inner ring

Rotation conditions	Nominal housing bore diameter D mm	ISO tolerance zone for housing	Nominal shaft diameter D mm	ISO tolerance zone for shaft
Load stationary relative to housing	All diameters	J6	All diameters	h5
Load rotates relative to housing	All diameters	M6	All diameters	g5

NOTE: Care should be taken that the selected bearing internal clearance is appropriate for the operating conditions. Details of shaft and housing quality requirements are given on pages 13 and 14.

Table 2 lists the recommended tolerances for the housing bore and the shaft raceway for bearings without inner rings.
Table 3 lists the recommended shaft tolerances for the above two mounting conditions when the bearings are used with inner rings.

Other mounting dimensions may be required for special operating conditions such as:
1. Extremely heavy radial loads
2. Shock loads
3. Temperature gradient across bearing
4. Housing material with heat expansion coefficient different to that of the bearing
5. Oscillating movements

Table 3- Shaft tolerances for bearings with inner ring

Rotation conditions	Nominal housing bore diameter D mm		ISO tolerance zone for housing	Nominal shaft diameter D mm	ISO tolerance zone for shaft
Load stationary relative to housing	All diameters		h5 (h6)	All diameters	J6
Load rotates relative to housing	>	</		All diameters	M6
	-	40	k5		
	40	100	m5		
	100	140	m5		
	140	-	n6		

NOTE: Care should be taken that the selected bearing internal clearance is appropriate for the operating conditions. Details of shaft and housing quality requirements are given on pages 13 and 14.

FULL COMPLEMENT NEEDLE BEARINGS WITH INNER RING
NA 1000, 2000, 22000, 3000 SERIES

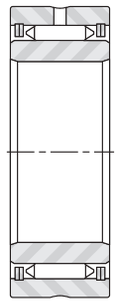

NA Serie 1000, 2000, 22000

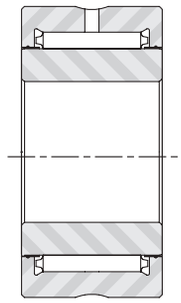

NA Serie 3000

Shaft mm	Designation	d mm	D mm	B mm	F_w mm	$r_{s\ min.}$ mm	Load ratings kN		Speed ratings kN min^{-1}		Weight. kg
							Dynamic	Static			
							C	C_0	Oil	Grease	
12	NA 1012 (1)	12	28	15	17.6	0.35	11.0	16.5	22000	14000	0.050
15	NA 1015 (1)	15	32	15	20.8	0.65	12.4	19.5	18000	12000	0.044
	NA 2015 (1)	15	35	22	22.1	0.65	23.5	37.5	17000	11000	0.082
17	NA 1017 (1)	17	35	15	23.9	0.65	13.7	22.5	16000	10000	0.047
20	NA 1020	20	42	18	28.7	0.65	19.3	33.5	13000	8600	0.084
	NA 2020	20	42	22	28.7	0.65	28.5	49.0	13000	8600	0.104
25	NA 1025	25	47	18	33.5	0.65	21.5	39.0	11000	7200	0.097
	NA 2025	25	47	22	33.5	0.65	33.0	60.0	11000	7200	0.122
	NA 22025	25	47	30	33.5	0.65	52.0	94.0	11000	7200	0.170
30	NA 1030	30	52	18	38.2	0.65	23.5	44.5	10000	6500	0.107
	NA 2030	30	52	22	38.2	0.65	34.5	66.0	10000	6500	0.139
	NA 22030	30	52	30	38.2	0.65	57.0	108	10000	6500	0.193
	NA 3030	30	62	30	44.0	0.65	64.0	125	8600	5600	0.309
35	NA 1035	35	58	18	44.0	0.65	26.0	51.0	8600	5600	0.127
	NA 2035	35	58	22	44.0	0.65	38.0	75.0	8600	5600	0.160
	NA 22035	35	58	30	44.0	0.65	63.0	124	8600	5600	0.225
	NA 3035	35	72	36	49.7	0.65	90.0	183	7600	4900	0.545
40	NA 1040	40	65	18	49.7	0.85	28.5	58.0	7600	4900	0.160
	NA 2040	40	65	22	49.7	0.85	41.5	85.0	7600	4900	0.200
	NA 22040	40	65	30	49.7	0.85	68.0	140	7600	4900	0.278
	NA 3040	40	80	36	55.4	0.85	97.0	204	6900	4500	0.672
45	NA 1045	45	72	18	55.4	0.85	30.5	65.0	6900	4500	0.193
	NA 2045	45	72	22	55.4	0.85	45.0	95.0	6900	4500	0.242
	NA 3045	45	85	38	62.1	0.85	105.0	230	6100	4000	0.710
50	NA 1050	50	80	20	62.1	0.85	33.0	73.0	6100	4000	0,418
	NA 2050	50	80	28	62.1	0.85	64.0	142	6100	4000	0,603
	NA 3050	50	90	38	68.8	0.85	113.0	255	5500	3600	1,22

(1) With holes and without lubrication groove

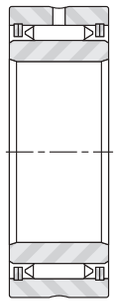

NA Serie 1000, 2000, 22000

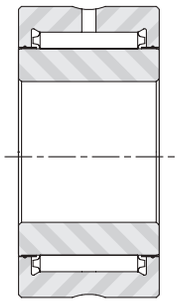

NA Serie 3000

Shaft mm	Designation	d mm	D mm	B mm	F_w mm	$r_{s\ min.}$ mm	Load ratings kN		Speed ratings kN min^{-1}		Weight. kg
							Dynamic	Static			
							C	C_0	Oil	Grease	
55	NA 1055	55	85	20	68.8	0.85	35.5	so.o	5500	3600	0.258
	NA 2055	55	85	28	68.8	0.85	69	157	5500	3600	0.361
	NA 3055	55	95	38	72.6	0.85	117	268	5200	3400	0.782
60	NA 1060	60	90	20	72.6	0.85	37	85,0	5200	3400	0.283
	NA 2060	60	90	28	72.6	0.85	72	165	5200	3400	0.413
	NA 3060	60	100	38	78.3	0.85	123	290	4900	3200	0.810
65	NA 2065	65	95	28	78.3	0.85	78	184	4900	3200	0.433
	NA 3065	65	105	38	83.1	0.85	129	308	4500	2900	0.865
70	NA 1070	70	100	20	83.1	0.85	43	103	4500	2900	0.322
	NA 2070	70	100	28	83,1	0.85	81	195	4500	2900	0.470
	NA 3070	70	110	38	88.0	0.85	134	325	4300	2800	0.906
75	NA 2075	75	110	32	88.0	0.85	104	253	4300	2800	0.767
	NA 3075	75	120	38	96.0	0.85	142	355	4000	2600	1.098
80	NA 1080	80	115	24	96.0	0.85	68	170	4000	2600	0.510
	NA 2080	80	115	32	96.0	0.85	110	275	4000	2600	0.694
	NA 3080	80	125	38	99.5	0.85	145	365	3800	2500	1.220
85	NA 2085	85	120	32	99.5	1.35	113	285	3800	2500	0.787
	NA 3085	85	130	38	104.7	1.35	150	390	3600	2300	1.252
90	NA 2090	90	125	32	104.7	1.35	117	300	3600	2300	0.837
	NA 3090	90	135	43	109.7	1.35	185	480	3500	2300	1.522
95	NA 2095	95	130	32	109.1	1.35	120	315	3500	2300	0.882
	NA 3095	95	140	43	114.7	1.35	190	505	3300	2100	1.551
100	NA 2100	100	135	32	114.7	1.35	125	330	3300	2100	0.677
	NA 3100	100	145	43	119.2	1.35	195	520	3200	2100	1.645
105	NA 2105	105	140	32	119.2	1.35	129	340	3200	2100	0.941
	NA 3105	105	150	45	124.7	1.35	203	550	3000	2000	1.762

FULL COMPLEMENT NEEDLE BEARINGS WITH INNER RING
NA 1000, 2000, 22000, 3000 SERIES

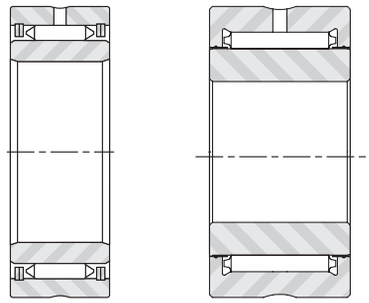

NA Serie 1000, 2000, 22000 **NA Serie 3000**

Shaft mm	Designation	d mm	D mm	B mm	F_w mm	$r_{s\ min.}$ mm	Load ratings kN		Speed ratings kN min^{-1}		Weight. kg
							Dynamic	Static			
							C	C_0	Oil	Grease	
110	NA 2110	110	145	34	124.7	1.35	35.5	so.o	5500	3600	0.258
	NA 3110	110	160	45	132.5	1.35	69	157	5500	3600	0.361
115	NA 2115	115	155	34	132.5	1.35	117	268	5200	3400	0.782
	NA 3115	115	165	45	137.0	1.35	37	85,0	5200	3400	0.283
120	NA 2120	120	160	34	137.0	1.35	72	165	5200	3400	0.413
	NA 3120	120	170	45	143.5	1.35	123	290	4900	3200	0.810
125	NA 2125	125	165	34	143.5	1.35	78	184	4900	3200	0.433
130	NA 2130	130	170	34	148.0	1.35	129	308	4500	2900	0.865
140	NA 2140	140	180	36	158.0	1.35	43	103	4500	2900	0.322
	NA 3140	140	205	52	170.5	1.35	81	195	4500	2900	0.470
150	NA 2150	150	195	36	170.5	1.35	134	325	4300	2800	0.906
160	NA 2160	160	205	36	179.3	1.35	104	253	4300	2800	0.767
170	NA 2170	170	220	42	193.8	1.35	142	355	4000	2600	1.098
180	NA 2180	180	230	42	202.6	1.35	68	170	4000	2600	0.510
190	NA 2190	190	245	42	216.0	1.35	110	275	4000	2600	0.694
200	NA 2200	200	255	42	224.1	1.35	145	365	3800	2500	1.220

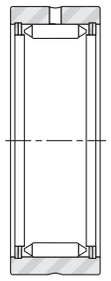

RNA Serie 1000, 2000, 22000

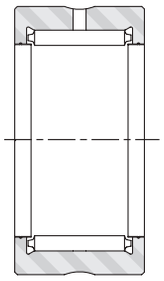

RNA Serie 3000

Shaft mm	Designation	F_w mm	D mm	C mm	E_w mm	$r_{s\ min.}$ mm	Load ratings kN		Speed ratings kN min^{-1}		Weight. kg
							Dynamic	Static			
							C	C_0	Oil	Grease	
7.3	RNA 1005 (1)	7.3	16	12	12.3	0.35	3.95	4.45	52000	34000	0.010
9.7	RNA 1007 (1)	9.7	19	12	14.7	0.35	4.80	5.90	39000	25000	0.013
12.1	RNA 1009 (1)	12.1	22	12	17.1	0.35	5.60	7.40	31000	20000	0.018
14.4	RNA 1010 (1)	14.4	24	12	19.4	0.35	6.35	8.90	26000	17000	0.020
17.6	RNA 1012 (1)	17.6	28	15	22.6	0.35	11.0	16,5	22000	14000	0.034
20.8	RNA 1015 (1)	20.8	32	15	25.8	0.65	12.4	19.5	18000	12000	0.044
22.1	RNA 2015 (1)	22.1	35	22	28.1	0.65	23.5	37.5	17000	11000	0.082
23.9	RNA 1017 (1)	23.9	35	15	28.9	0.65	13.7	22.5	16000	10000	0.047
28.7	RNA 1020	28.7	42	18	34.7	0.65	19.3	33.5	13000	8600	0.084
	RNA2020	28.7	42	22	34.7	0.65	28.5	49.0	13000	8600	0.104
33.5	RNA 1025	33.5	47	18	39.5	0.65	21.5	39.0	11000	7200	0.097
	RNA 2025	33.5	47	22	39.5	0.65	33.0	60.0	11000	7200	0.122
	RNA 22025	33.5	47	30	39.5	0.65	52.0	94.0	11000	7200	0.170
38.2	RNA 1030	38.2	52	18	44.2	0.65	23.5	44.5	10000	6500	0.107
	RNA2030	38.2	52	22	44.2	0.65	34.5	66,0	10000	6500	0.139
	RNA22030	38.2	52	30	44.2	0.65	57.0	108.0	10000	6500	0.193
44	RNA 1035	44.0	58	18	50.0	0.65	26.0	51.0	8600	5600	0.127
	RNA 2035	44.0	58	22	50.0	0.65	38.0	75.0	8600	5600	0.160
	RNA 22035	44.0	58	30	50.0	0.65	63.0	124.0	8600	5600	0.225
	RNA 3030	44.0	62	30	51.0	0.65	64.0	125.0	8600	5600	0.309
49.7	RNA 1040	49.7	65	18	55.7	0.65	28.5	58.0	7600	4900	0.160
	RNA2040	49.7	65	22	55.7	0.65	41.5	85.0	7600	4900	0.200
	RNA22040	49.7	65	30	55.7	0.65	68.0	140.0	7600	4900	0.278
	RNA 3035	49.7	72	36	56.8	0.65	90.0	183.0	7600	4900	0.545
55.4	RNA 1045	55.4	72	18	61.4	0.85	30.5	65.0	6900	4500	0.193
	RNA 2045	55.4	72	22	61.4	0.85	45.0	95.0	6900	4500	0.242
	RNA 3040	55.4	80	36	62.5	0.85	97.0	204.0	6900	4500	0.672

(1) With holes and without lubrication groove

FULL COMPLEMENT NEEDLE BEARINGS WITH INNER RING
NA 1000, 2000, 22000, 3000 SERIES

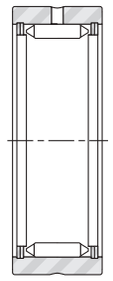

RNA Serie 1000, 2000, 22000

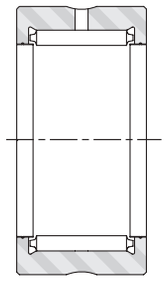

RNA Serie 3000

Shaft mm	Designation	F_w mm	D mm	C mm	E_w mm	$r_{s\ min.}$ mm	Load ratings kN		Speed ratings kN min^{-1}		Weight. kg
							Dynamic	Static			
							C	C_0	Oil	Grease	
62.1	RNA 1050	62.1	80	20	68.1	0.85	33.0	73.0	6100	4000	0.255
	RNA 2050	62.1	80	28	68.1	0.85	64.0	142	6100	4000	0.375
	RNA3045	62.1	85	38	69.2	0.85	105.0	230	6100	4000	0.710
68.8	RNA 1055	68.8	85	20	74.8	0.85	35.5	80.0	5500	3600	0.258
	RNA 2055	68.8	85	28	74.8	0.85	69.0	157	5500	3600	0.361
	RNA 3050	68.8	90	38	75.9	0.85	113.0	255	5500	3600	0.705
72.6	RNA 1060	72.6	90	20	78.6	0.85	37.0	85.0	5200	3400	0.283
	RNA.2060	72.6	90	28	78.6	0.85	72.0	165	5200	3400	0.413
	RNA3055	72.6	95	38	79.6	0.85	117.0	268	5200	3400	0.782
78.3	RNA 1065	78.3	95	20	84.3	0.85	41.5	97.0	4900	3200	0.306
	RNA 2065	78.3	95	28	84.3	0.85	78.0	184	4900	3200	0.433
	RNA 3060	78.3	100	38	85.3	0.85	123.0	290	4900	3200	0.810
83.1	RNA 1070	83.1	100	20	89.1	0.85	43.0	103	4500	2900	0.322
	RNA 2070	83.1	100	28	89.1	0.85	81.0	195	4500	2900	0.470
	RNA3065	83.1	105	38	90.2	0.85	129.0	308	4500	2900	0.865
88	RNA 1075	88.0	110	24	95.0	0.85	64.0	155	4300	2800	0.577
	RNA 2075	88.0	110	32	95.0	0.85	104.0	253	4300	2800	0.767
	RNA 3070	88.0	110	38	95.0	0.85	134.0	325	4300	2800	0.906
96	RNA 1080	96.0	115	24	103.0	0.85	68.0	170	4000	2600	0.510
	RNA 2080	96.0	115	32	103.0	0.85	110.0	275	4000	2600	0.694
	RNA 3075	96.0	120	38	103.0	0.85	142.0	355	4000	2600	1.098
99.5	RNA 2085	99.5	120	32	106.5	1.35	113.0	285	3800	2500	0.787
	RNA 3080	99.5	125	38	106.5	0.85	145.0	365	3800	2500	1.220
104.7	RNA 2090	104.7	125	32	111.7	1.35	117.0	300	3600	2300	0.837
	RNA 3085	104.7	130	38	111.7	1.35	150.0	390	3600	2300	1.252
109.1	RNA 2095	109.1	130	32	116.1	1.35	120.0	315	3500	2300	0.882
	RNA 3090	109.1	135	43	116.1	1.35	185.0	480	3500	2300	1.522

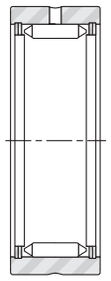

RNA Serie 1000, 2000, 22000

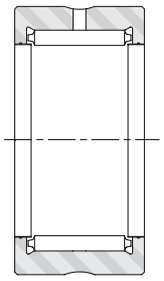

RNA Serie 3000

Shaft mm	Designation	F_w mm	D mm	C mm	E_w mm	$r_{s\ min.}$ mm	Load ratings kN		Speed ratings kN min^{-1}		Weight. kg
							Dynamic	Static			
							C	C_0	Oil	Grease	
114.7	RNA 2100	114.7	135	32	121.7	1.35	125	330	3300	2100	0.677
	RNA3095	114.7	140	43	121.7	1.35	190	505	3300	2100	1.551
119.2	RNA 2105	119.2	140	32	126.2	1.35	129	340	3200	2100	0.941
	RNA 3100	119.2	145	43	126.2	1.35	195	520	3200	2100	1.645
124.5	RNA2110	124.5	145	34	131.5	1.35	133	360	3000	2000	1.015
	RNA 3105	124.5	150	45	131.5	1.35	203	550	3000	2000	1.762
132.5	RNA 2115	132.5	155	34	139.5	1.35	139	380	2900	1900	1.205
	RNA 3110	132.5	160	45	139.5	1.35	210	580	2900	1900	2.037
137	RNA 2120	137	160	34	144.0	1.35	142	395	2800	1800	1.265
	RNA3115	137	165	45	144.0	1.35	215	600	2800	1800	2.140
143.5	RNA 2125	143.5	165	34	150.5	1.35	145	410	2700	1800	1.218
	RNA 3120	143.5	170	45	150.5	1.35	224	630	2700	1800	2.107
148	RNA2130	148	170	34	155.0	1.35	150	425	2600	1700	1.292
158	RNA 2140	158	180	36	165.0	1.35	157	455	2400	1600	1.478
	RNA 3130	158	190	52	166.0	1.35	275	790	2400	1600	3.285
170.5	RNA 2150	170.5	195	36	177.5	1.35	165	490	2200	1400	1.790
	RNA 3140	170.5	205	52	178.5	1.35	290	860	2200	1400	3.840
179.3	RNA 2160	179.3	205	36	186.3	1.35	170	515	2100	1400	1.970
	RNA 3150	179.3	215	52	187.3	1.35	300	900	2100	1400	4.185
193.8	RNA2170	193.8	220	42	200.8	1.85	233	720	2000	1300	2.570
	RNA 3160	193.8	230	57	201.9	1.35	360	1110	2000	1300	4.955
202.6	RNA 2180	202.6	230	42	209.6	1.85	240	750	1900	1200	2.835
216	RNA 2190	216	245	42	223.0	1.85	250	800	1800	1200	3.210
	RNA 3180	216	255	57	224.1	1.85	385	1240	1800	1200	6.040
224.1	RNA 2200	224.1	255	42	231.1	1.85	257	830	1700	1100	3.560
236	RNA 2210	236	265	42	243.1	1.85	279	910	1600	1000	3.470
258.4	RNA 3220	258.4	300	64	268.4	1.85	490	1650	1500	980	8.570
269.6	RNA2240	269.6	300	49	276.6	1.85	345	1190	1400	910	4.985
281.9	RNA 3240	281.9	325	64	291.9	1.85	520	1800	1300	850	9.480

CAM FOLLOWER

6

PAGE 94	6.2 TECHNICAL SPECIFICATIONS
PAGE 101	6.3 APPLICATIONS
PAGE 103	6.4 PRODUCTS WITH SPECIAL SHARE
PAGE 104	6.5 ACCESSORIES
PAGE 105	6.6 CAM FOLLOWERS WITH STUD
PAGE 110	6.7 CAM FOLLOWERS WITH THREADED STUD
PAGE 112	6.8 SMALL CAM ROLLERS WITHOUT STUD
PAGE 114	6.9 FULL COMPLEMENT NEEDLE ROLLERS
PAGE 116	6.10 FULL COMPLEMENT ROLLERS
PAGE 122	6.11 CAM FOLLOWERS WITHOUT STUD AND PIVOT
PAGE 123	6.12 GUIDE WHILES
PAGE 124	6.13 CAM FOLLOWERS WITH HEAVY STUD PLF
PAGE 126	6.14 CAM FOLLOWERS DOUBLE PFL

TECHNICAL SPECIFICATIONS

Cam followers are designed to rotate directly on cams, flat surfaces or guidex. In order to meet the unusual conditions of use - significant loads accompanied by substantial and repeated shocks - these types of bearings have the following characteristics:

- Heavy section outer ring, to support the load and minimise the risk of deformations that reduce the bearing's load-supporting capacity.
- Rolling or cup needle roller bearing, with cage or full complement to guarantee maximum load capacity.
- Outer profiled ring to compensate for parallelism errors between the roller and track or cylindrical ring to reduce contact pressure with the sliding surface.
- Lubrication hole with output under the needles to restore the grease through the axle.

The cam followers with stud can be equipped with an eccentric collar to adjust the pre-load during assembly.

The cam followers can be equipped with synthetic or metal seals to retain the grease.

Apart from the products shown in this catalogue, Nadella produces numerous variants for specific operating conditions.

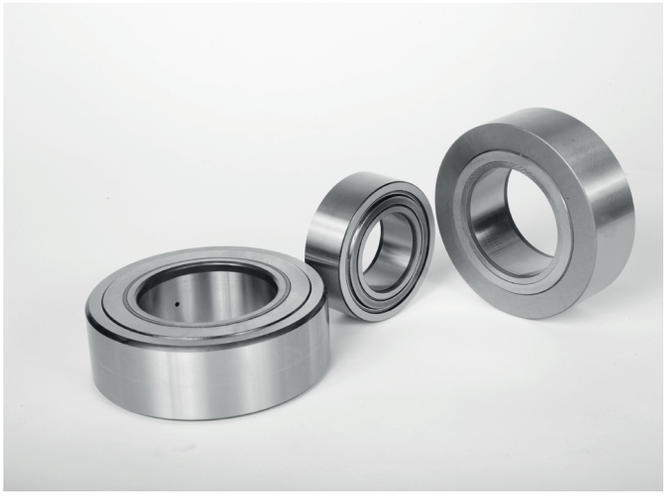

LOAD CAPACITY

The cam follower is generally used as a wheel that runs on a guide or cam. The load is applied to the cam follower without stud at the contact point with the race track and, unlike a bearing, the outer ring is not kept in the case and is free to deform. The elastic deformation of the outer ring affects the load distribution between the rolling bearing elements reducing the capacity calculated in compliance with ISO standards for bearings.

The dimensional tables show the load values

- The C_w load coefficient to be used to calculate the duration t. Keep in mind the bearing's load capacity C in compliance with ISO281 based on the rigidity of the outer ring

$$L_{10} = \left(\frac{C_w}{f_w \cdot P_r}\right)^{10/3}$$

$$L_h = \frac{10^6 \cdot L_{10}}{60 \cdot n}$$

$$L_{km} = L_{10} \cdot \pi \cdot D$$

C_w : dynamic load coefficient of the cam follower without stud for 10^6 revs
f_w : overload factor
P_r : radial load applied in N
L_{10} : duration calculated in millions of revs
L_h : duration in hours
L_{km} : duration in km
n : average speed in revs/minute

Overload factor F_w

1.0 - 1.2	low speed functioning with regular load
1.2 - 1.5	functioning under normal conditions
1.5 - 2.0	functioning with minor shocks and vibrations
2.0 - 4.0	high speed, shocks and vibrations

The maximum load applicable to the cam followers without stud takes into consideration the acceptable load from the bearing (C_o in accordance with ISO 76 reduced on the basis of the rigidity of the outer ring), the resistance of the outer ring and, for cam followers with stud, the resistance of the stud's resistance. The tables show the applicable limit load.

- Dynamic load limit F_r: this is the load which should not be exceeded when the cam followers without stud are subject to repeated strain.
- Static load limit F_{or}: this is the static resistance limit that the cam follower without stud can bear under exceptional conditions and should never be exceeded.

The safety coefficient f_s can be calculated as

$f_s = F_r / P_r$

F_r: Product dynamic limit load

In any event, the applied load P_r needs to be lower than the product's static load F_{or}.

Safety factor f_s minimum recommended

>=3	in the event of shocks or vibrations, applications with a need for gentle rolling
>=1.5	functioning under normal conditions
>=1	almost static applications, without the need for gentle rolling

The load limit F_r and F_{or} for the cam followers with stud in the product tables refers to the concentric version. Assessment will need to be made as to whether the eccentric load can rotate the pivot in its seating, if the GCR or GCUR or KRE eccentric version is used.

Furthermore, the rolling track resistance needs to be taken into consideration. The assessment method adopted is based on the calculation of the Hertz pressure compared to the pressure accepted by the cam material.

The product catalogue data refers to the standard steel version. The stainless steel products or those stabilised by high temperature have a reduced load capacity.

Contact Nadella Technical Assistance for more details.

TECHNICAL SPECIFICATIONS

PRECISION

Cam followers with stud in the series GC, GCU, FG, FGU, KR refer to the dimensions in standard ISO 6278.
The reference standard for the same products is ISO 7063.
The cam follower manufacturing tolerance given in the tables below are generally more restrictive compared to the reference standard, but in any event, still compliant with the standard.
In particular, the outer diameter of the cam followers without stud is produced in h6 or h7 tolerance even for the versions with profiled or convex outer ring

RADIAL PLAY

The radial play of the standard cam followers without stud normally falls into category C2 established for needle roller bearings in compliance with standard ISO 5753-1.

Cam follower without stud outer diameter tolerance D
GC / PF / FG / FL / PFDL / GCU / FGU

Up to diameter 32 inclusive	h6
Beyond diameter 32	h7

Max error on rotation
GC / PF / FG / FL / PFDL / GCU / FGU

Diameter d		Kea um
10	18	15
18	30	15
30	50	20
50	80	25
80	120	35
120	150	40
150	180	45
180	240	50

Diameter tolerance on cam follower stud d_1
GC / PF / PFDL / GCU

All dimensions	h6

Cam follower hole tolerance d (Micron)
GC / PF / PFDL / GCU

Diameter d		Tolerance um	
from	up to	upper	lower
3	10	0	-8
10	18	0	-8
18	30	0	-10
30	50	0	-12
50	80	0	-15
80	120	0	-20
120	180	0	-25

SELECTION OF SEAL TYPE

The key function of the seals is to protect the bearing from its surrounding environment and treat the grease inside.

- The cam followers with no seal are shown in the applications with oil greasing coming from outside the cam follower without stud (typically high load and speed cams) where it is essential to allow for the entry of the oil in the bearing for greasing and cooling.

- The cam followers with stud in series GC and FG with a diameter of 16 inclusive can fit seals:

  - EEM type, of metal guards, are mechanically resistant and suited to any temperature.

  - EE type seal is manufactured with a Teflon ring in contact with the moving parts. The seal's maximum operating temperature is 220°C.

- Cam followers with stud in the GCU series can be fitted with MM type seals that act as labyrinth metal guards and are suited to any temperature.

- Cam followers without stud in the FGU series can be fitted with MM type seals that act as metal guards and are suited to any temperature.

- The cam followers without stud in the KK..EE series are fitted with plastic seals (not Teflon) integrated with the outer ring's axial containment abutment.

- The cam followers without stud in the PK and FK series fitted with RS type seals in NBR, can be used up to a temperature of 80°C. For temperatures in excess of this, the cam followers without stud up to and including size 90 can be fitted with Viton seals (suffix V). The acceptable temperature of the seal is 200°C.

OPERATIONAL GREASING AND SEAL

The type of cam followers shown in this catalogue, with the exception of the RNA type cam followers without stud are supplied with a grease that permits an operating temperature from -20°C to 120°C. The stainless steel cam followers without stud use a category NSF H1 grease for alimentary purposex.

The RNA 11000 type cam followers without stud are supplied with a protection compatible to a lithium soap based grease. As with bearings, the protection is unsuited for greasing the cam followers without stud. The maximum operating temperature depends on the grease used.

For cam followers and full complement needle followers GC, GCU and derivatives, with metal or plastic seals (EE - Teflon), the operating temperature limit depends on the grease and in the case of standard cam followers without stud, is between -20°C and 120°C.

For full complement needle rollers with cage, the operating temperature is between -20°C and 80°C.

The cam followers without stud with tapered bearings type PK and FK are supplied already greased and in the standard version can operate between -20°C and 80°C (standard seals in NBR) or 120°C (seals in Viton). a suitable grease needs to be used for a higher temperature.

Greased bearings can be provided with suitable grease at high or low temperatures, or with no grease.

For high temperatures starting at 150°C, the products need to undergo stabilising heat treatment which involves a reduction of hardness and load capacity.

TECHNICAL SPECIFICATIONS

OPTIMISED PROFILE

Cam rollers are generally used in contact with the cams or sliding guidex. The contact between the surface of the guide or cam and cam follower without stud is selected on the basis of the application considering the strain caused on the material and the consequences of any misalignments.

Cam followers without stud with **constant radius convex outer ring**. The theoretical point of contact under the effect of elastic deformations caused by the load converts into a surface, the contact pressure is calculated with the classic Hertz formulae and has a parabolic tendency with maximum strain in the centre of the contact area. The maximum value is taken as reference for the resistance assessment requested of the rolling track. As the diameter of the cam follower without stud and the convex radius expands, the contact pressure drops. Any misalignment of the cam follower without stud moves the contact zone without modifying dimension or strain. This is a solution suited to the application with an average load and relatively inexact geometries, typically applications for a linear movement.

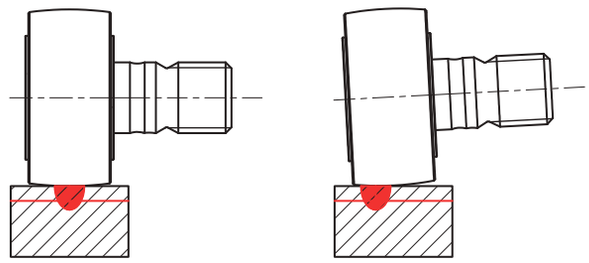

Rollers with convex outer ring with constant radius

Cam followers without stud with **cylindrical outer ring**. The theoretical contact line under the effect of the contact load opens onto a vast surface reducing the average and maximum pressure. As an initial estimate according to the Hertz formulae with equal load, the strain and deformation are considerably lower compared to the contact with the convex cam roller without stud but two important considerations need to be made: 1) at the ends of the contact line, due to the edge, there is a peak in the strain which, in practical terms, reduces the difference compared to the previous case 2) the effect of a misalignment, even a minor one, moves the contact to an extreme prejudicing the contact itself and even the load which weighs on the bearing below. This is a solution suited to applications with a high load and which require the machine to make careful mechanical processings to avoid misalignments.

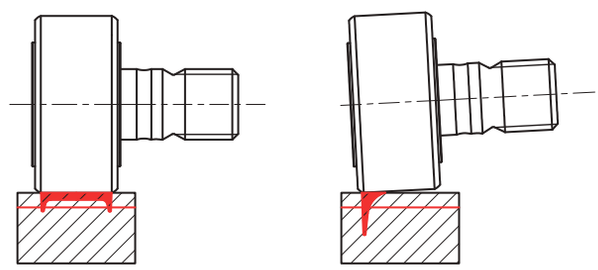

Rollers with cylindrical outer ring

Cam followers without stud with **optimised profile outer ring**. The profile of the cam follower without stud is created with a wide radius in the central part of the sleeve that decreases by moving away from the central line of the cam follower without stud. When the cam follower without stud is properly aligned, the wide radius allows for a vast contact area and excellent distribution of the load; in the event of misalignment between the track and cam follower without stud, the contact moves in a similar fashion to the convex cam followers without reaching the edge of the strip, thus protecting the track and inner bearing against abnormal strain. This is a solution suited both to applications that require a high level of load accuracy and rigidity as well as to applications with misalignments.

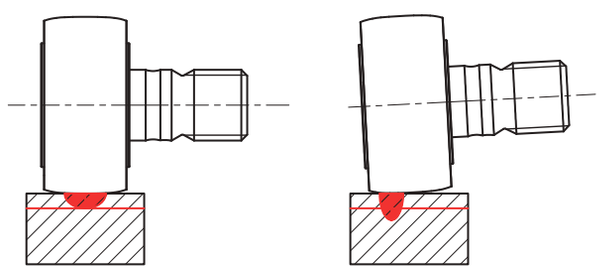

Rollers with convex outer ring with optimised radius.

ALIGNMENT TOLERANCE PERMITTED BETWEEN ROLLER AND TRACK

Cam followers without stud with convex outer ring or optimised profile allow for an inclination compared to the surface of the track, up to a maximum as shown in the table.

Cam follower without stud type	Inclination Δ
RNA 11 000 B6	1.5 per 1000
Cam followers FG, GC, GCU with convex outer ring or optimised profile	7 per 1000

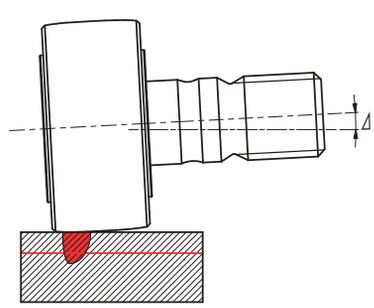

ASSEMBLY INSTRUCTIONS

Direction of the greasing radial hole

In the case of use with heavy loads, shocks or vibrations, it is best to avoid the greasing hole ending up in the area in which the load weighs down on the needles, which is the side in contact with the cam or rolling track.
The position of the hole in question in the cam followers with stud that is not visible from the outside, is indicated by a reference on the head of the cam follower with stud.

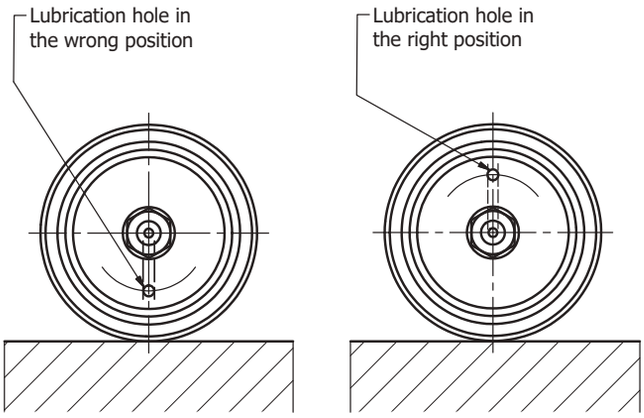

Side rest for the cam followers

In the event of relevant axial loads or functioning in the presence of vibrations, we recommend the outer diameter of the rest be at least equal to the d_A quota in the dimensions tablex.

Assembly hole diameter

The recommended tolerance for the slot hole in the cam follower with stud is d_1 H7.

Assembly pivot diameter

The recommended tolerance for the pivot to be inserted in the cam followers hole in the FG and FGU series is h5.

Nut clamping

The clamping torque given in the table allows the pivot to be clamped securely in the housing. An upper clamping torque can damage the product.
The clamping torques are taken for non-greased threads; for greased threads, multiply the value of the torque in the table by 0.8.
For products in the GC and GCU series supplied with two nuts, clamp the first nut with the recommended torque and then the second one.

Cam followers without stud with eccentric collar

The load applied to the cam follower without stud with eccentric collar generates a clamp that tends to rotate the stud in its housing. In order to avoid this effect generating a movement that could slacken the nut, adjust the eccentricity so that the cam follower is alongside the rolling track by rotating the stud in the same direction as the nut clamping.

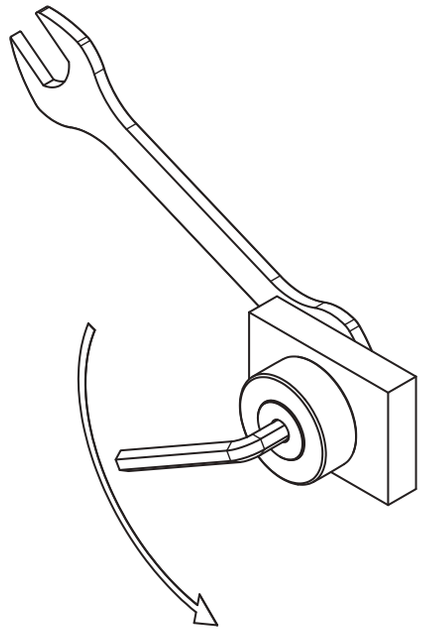

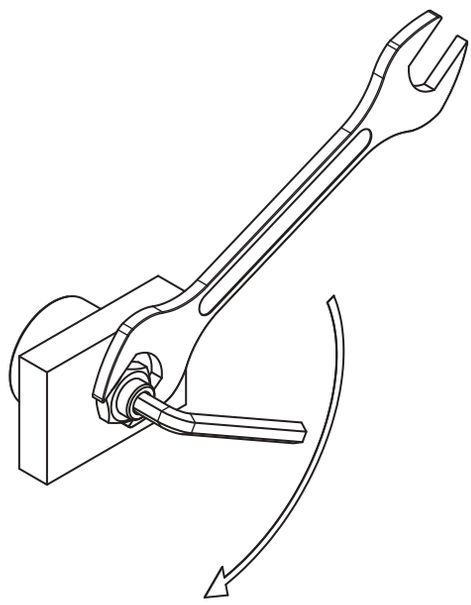

SPECIAL APPLICATIONS

As well as the products in the catalogue, Nadella also designs and manufactures special needle and roller cam followers for specific applications. There can be variations on standard products or completely special products. Here are some examples:

CAM FOLLOWER WITHOUT STUD WITH SPECIAL CONNECTIONS TO THE GREASING SYSTEM

PFDL28.10 with threaded hole to connect to the grease dispensing system.

The full complement needle follower generally requires periodical greasing or, for more load and speed strained applications, the oil-filled function. An additional threaded hole in the stud was added to simplify periodical re-greasing connecting the cam roller to a centralised dispensing system.

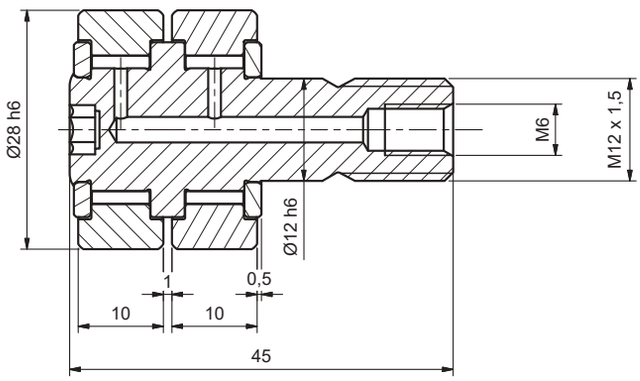

PK52CNX LB cam followers without stud.

The PK series cam followers without stud with tapered bearings are normally considered greased for life. In some environments, for example, where there is a high humidity level, the grease might deteriorate over time and it is, therefore, advisable to take into consideration the possibility of having to top up the grease. The LB option for guide wheels with stud allows you to connect the nipple or plug screw to the threaded hole. For cam followers without stud and with through hole, this allows the grease to be inserted from the pivot (create hole and circular groove on the assembly pivot).

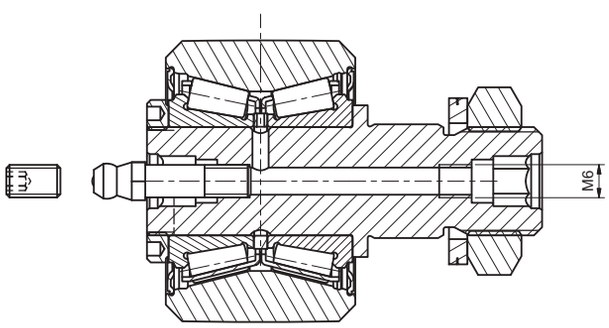

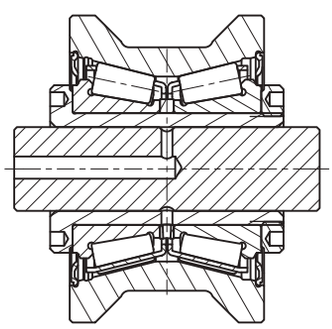

CAM FOLLOWERS FOR CAMS AND INDEXERS

In the case of more complex mechanical applications, cam followers without stud are manufactured with materials, processing cycles, finishings, dimensional tolerances and radial play that are optimised to increase rigidity, load capacity and precision as much as possible.

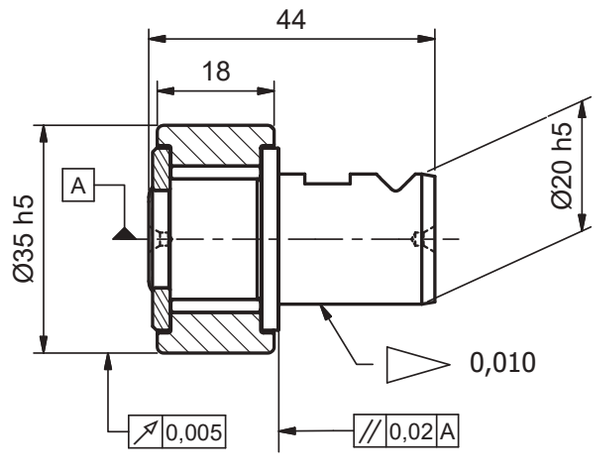

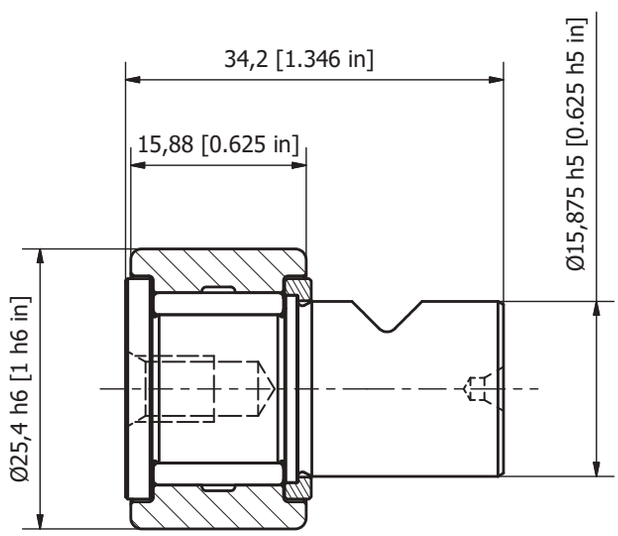

SPECIAL APPLICATIONS

6.2

ANTI-CORROSION CAM FOLLOWERS WITHOUT STUD

The cam followers without stud and full complement needle followers can be supplied in anti-corrosion NX version. Nadella offers stainless steel or protected cam followers without stud with surface treatments. The stainless steel used is AISI 400 and achieves a hardness comparable to steel for bearings but has a limited resistance to corrosion. The inner needles can be in stainless steel or more commonly in 100Cr6 steel. In this case the corrosion protection of the needles is entrusted to grease (NSF H1 classified grease for alimentary use and resistant to humidity). Nuts and washers are supplied in A2 stainless steel, the greasing nipple in raw brass or stainless steel.

As an alternative to the stainless steel versions hard nickel or hard chrome treatments can be used.

Different solutions can be configured based on the environment in which it is applied

- **NX 11:** this is the most common version that has outer parts in stainless steel, seals protected by surface coatng and needles in standard bearing steel
- **NX 12**: outer ring in stainless steel, remaining external components nickel-plated, inner needles or rollers in standard bearing steel.
- **NX 17:** entirely in stainless steel.
- **NX 18:** hard chromium-plated components, needles in standard bearing steel. This is the best option for small production batches.

CAM FOLLOWERS FOR HIGH/LOW TEMPERATURE

These require suitable grease and stabilisation of the material for expected operating temperature.

CAM FOLLOWERS FOR VACUUM

Entirely in stainless steel and slow evaporating grease.

WEAR-RESISTANT MATERIALS

Cam followers without stud with stainless outer ring for wear-resistant tools.

SURFACE FINISHINGS

Mirror polishing and oxidisation to add the colour black.

OTHER PRODUCTS
WITH SPECIAL SHAPE

6.3

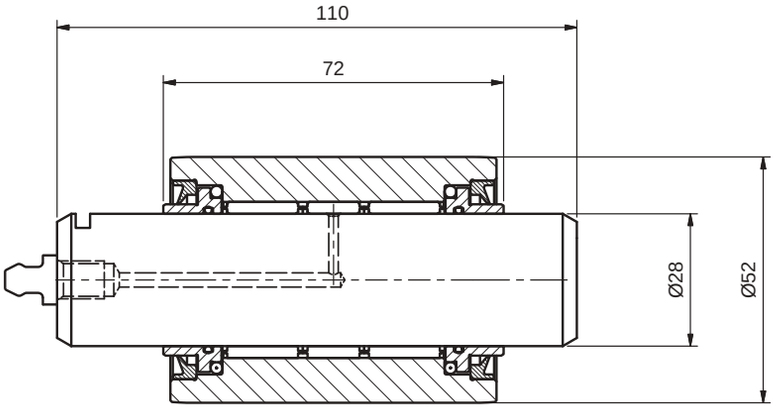

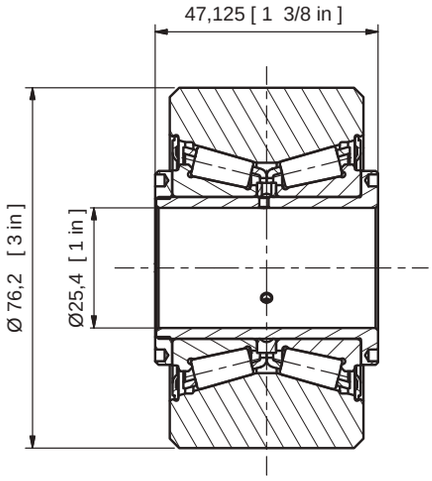

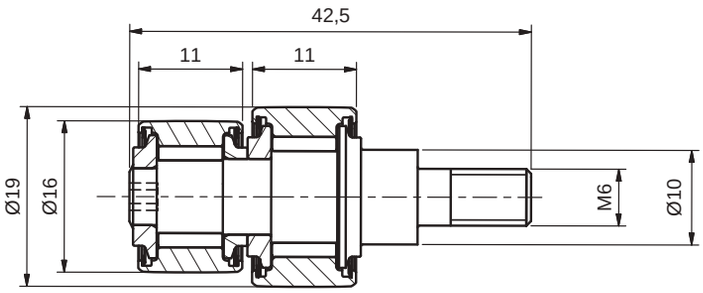

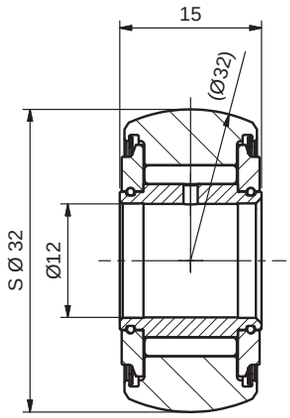

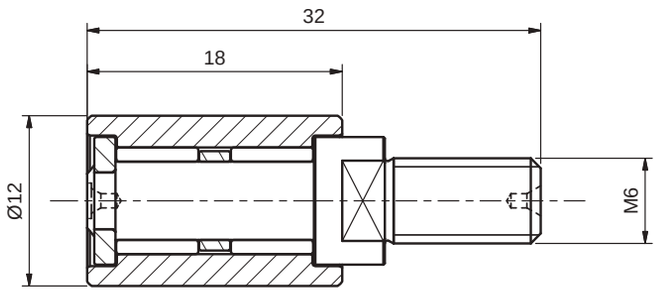

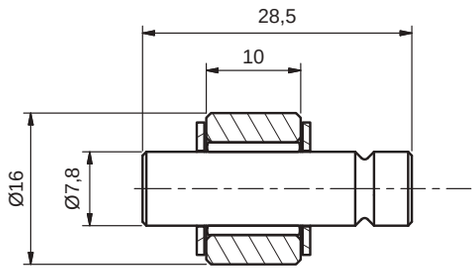

ACCESSORIES
FOR CAM FOLLOWERS

6.4

ECCENTRIC COLLARS

In order to allow for the cam follower with stud bearing position to be adjusted with respect to the hole, eccentric collars slipped onto the stud with interference are used. This way the position of the bearing can be regulated for the value ± k, that is the eccentricity.

The eccentric collar obstructs the greasing hole on the shank of the stud; collars adapted to allow the eccentric cam followers without stud to be greased through the hole in the stud are supplied on request.

The eccentric collars are supplied already fitted to the pivots of the cam follower without stud GCR, GCUR and KRE.

CLAMPING NUT

The cam followers with stud are supplied with nut and washer for assembly. See pages relative to the supply detail.

NIPPLE AND GREASING PLUG

The full complement needle rollers in the GCU and GC..SW series complete with holes for re-greasing and built-in hexagonal socket at both ends. They are supplied with greasing plug and nipple. Insert one or the other in the specific ends depending on which side the re-greasing will be done.

GREASING INJECTOR

The SRG-80 pump with 150 cc capacity can be used to manually re-grease the cam followers.

It should be fitted with a tip suited to the nipple being used.

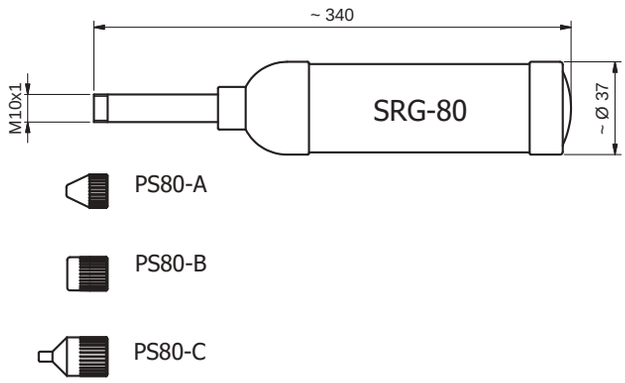

Tip for greasing injector

Cam followers with stud, in the series GCU and GC..SW with GC35 size concave greaser included.	PS80-A
Cam followers with stud, in the series GC..SW with GC16 and GC32 size concave greaser included.	PS80-C
Cam followers without stud with convex head greaser with option ..LB	PS80-B

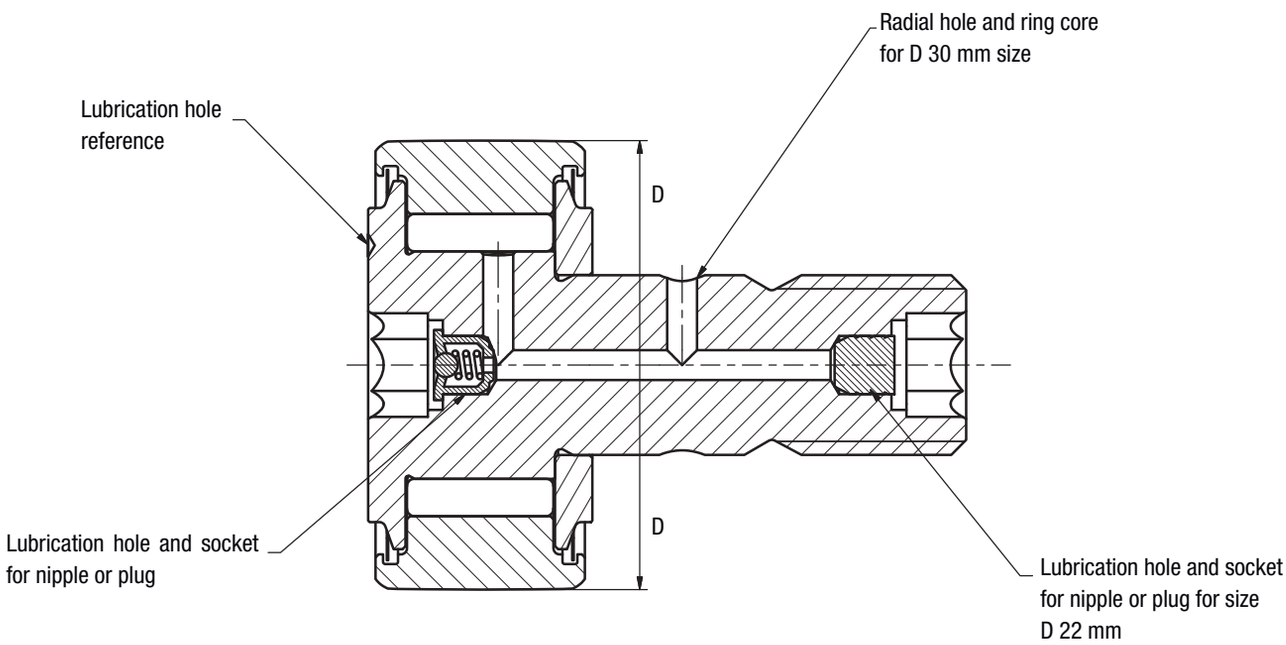

CAM FOLLOWERS WITH STUD
GC .. SW

Full complement needle rollers with outer diameter from 16 to 90 mm

See page 47 for details on stainless steel versions.

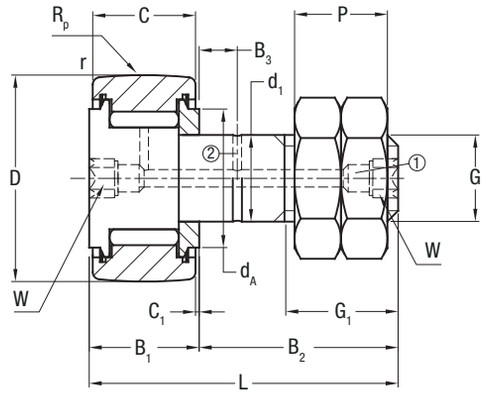

Bore hole ① starting from D=22 mm
Bore hole ② starting from D=30 mm

∅ outer D mm	Designation 1) GC .. SW	d_1 2) mm	L mm	B_1 mm MAX	B_2 mm	Threading G mm	G_1 mm	C mm	C_1 mm	d_A mm	B_3 mm	r mm	R_p 3) mm
16	16	6	28	12.2	16	M6x1	8	11	0.6	10.4	-	0.3	500
19	19	8	32	12.2	20	M8x1.25	10	11	0.6	12.6	-	0.3	500
22	22	10	36	13.2	23	M10x1.25	12	12	0.6	15.5	-	0.3	600
24	24	10	36	13.2	23	M10x1.25	12	12	0.6	15.5	-	0.3	600
26	26	10	36	13.2	23	M10x1.25	12	12	0.6	18	-	0.3	600
28	28	10	36	13.2	23	M10x1.25	12	12	0.6	18	-	0.3	600
30	30	12	40	15.2	25	M12x1.5	13	14	0.6	21	6	0.6	700
32	32	12	40	15.2	25	M12x1.5	13	14	0.6	21	6	0.6	700
35	35	16	52	19.6	32.5	M16x1.5	17	18	0.8	26	8	0.6	800
40	40	18	58	21.6	36.5	M18x1.5	19	20	0.8	31	8	1.0	1000
47	47	20	66	25.6	40.5	M20x1.5	21	24	0.8	35	9	1.0	1200
52	52	20	66	25.6	40.5	M20x1.5	21	24	0.8	35	9	1.0	1200
62	62	24	80	30.6	49.5	M24x1.5	25	29	0.8	45	11	1.0	1500
72	72	24	80	30.6	49.5	M24x1.5	25	29	0.8	45	11	1.0	1500
80	80	30	100	37.0	63	M30x1.5	32	35	1.0	61	15	1.0	1700
85	85 9)	30	100	37.0	63	M30x1.5	32	35	1.0	61	15	1.0	1700
90	90	30	100	3.07	63	M30x1.5	32	35	1.0	61	15	1.0	1700

1) Cam follower with stud designation
GC..SW Concentric cam follower with stud optimised profile outer ring
GCL..SW Concentric cam follower with stud cylindrical outer ring (product available on request)
GCR.. Cam follower with stud with eccentric collar
No suffix Without seal
Suffix ..EE With plastic seal, ex. GC40EESW
Suffix ..EEM With metal seal, ex. GC40EEMSW
2) Hole diameter for assembly of concentric cam follower without stud: d_1 H7
3) Convex radius in the central part to contact pressure calculation

See page 47 for details on stainless steel versions.

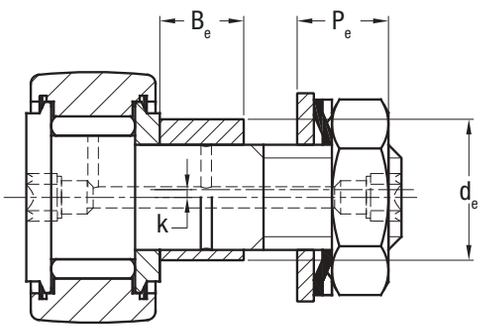

from GCR16SW to GCR52SW

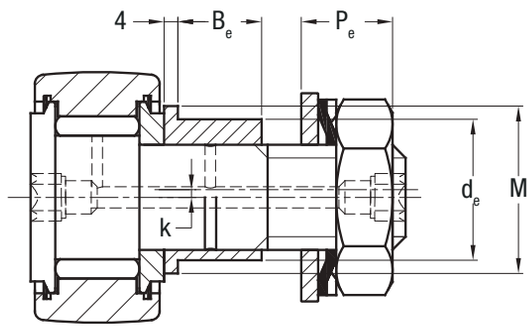

from GCR62SW to GCR90SW

W mm	P 7) mm	Eccentric bearing					Load coefficients (N) 6)			Greasing speed limit with grease (min^{-1})	Weight with nuts and washers Kg	Clamping torque Nm	∅ outer D mm
		d_e 4) 5) mm	k 5) mm	M 5) mm	B_e 5) mm	P_e 8) mm	C_w	Din. F_r	Stat. F_{or}				
4	6.4	9	0.5	-	8	5.6	4900	1200	2300	5000	0.024	3	16
4	8	11	0.5	-	10	6.4	5600	2900	5400	4100	0.039	8	19
4	10	14	1.0	-	11	7.9	6900	5300	9400	3400	0.057	20	22
4	10	14	1.0	-	11	7.9	7600	5300	9800	3400	0.072	20	24
4	10	14	1.0	-	11	7.9	8600	5300	9800	3000	0.080	20	26
4	10	14	1.0	-	11	7.9	9200	5300	9800	3000	0.088	20	28
6	12	16	1.0	-	11	9.5	13000	7900	15000	2600	0.118	26	30
6	12	16	1.0	-	11	9.5	13000	7900	15000	2600	0.126	26	32
10	16	21	1.5	-	14	12.2	18000	14000	23000	2100	0.220	64	35
12	18	24	1.5	-	16	13.4	22000	19000	34000	1800	0.321	90	40
14	20	27	2.0	-	17.5	14.4	27000	22000	35000	1500	0.500	120	47
14	20	27	2.0	-	17.5	14.4	33000	22000	40000	1500	0.568	120	52
12	24	36	3.0	44	18	17.5	42000	31000	58000	1200	1.035	220	62
12	24	36	3.0	44	18	17.5	46000	31000	58000	1200	1.278	220	72
14	30	42	3.0	50	27	20.6	58000	50000	93000	900	2.074	450	80
14	30	42	3.0	50	27	20.6	61000	50000	93000	900	2.235	450	85
14	30	42	3.0	50	27	20.6	63000	50000	93000	900	2.435	450	90

4) Hole diameter for assembly of the eccentric cam follower without stud: d_e H7
5) Dimensions of the eccentric bearing.
6) Fr and For load for cam follower without stud, with no eccentric collar.
7) The GC concentric cam followers with stud are supplied with two clamping nuts.
8) GCR eccentric cam followers with stud are supplied with eccentric bearing already fitted, clamping nut, cogged washer and support surface washer.
9) Product available on request

CAM FOLLOWERS WITH STUD
KR..EE

Cam followers with stud, with roller cage and outer diameter from 16 to 90 mm

∅ outer D mm	Designation 1) KR, KR..EE	d_1 2) mm	L mm	B_1 mm	B_2 mm	Threading G mm	G_1 mm	C mm	C_1 mm	d_A mm	B_3 mm	r mm	R 4) mm
16	KR16 3)	6	28	12.2	16	M6x1	8	11	0.6	12.5	-	0.15	500
	KR16EE 3)	6	28	12.2	16	M6x1	8	11	0.6	12.5	-	0.15	500
19	KR19 3)	8	32	12.2	20	M8x1.25	10	11	0.6	15	-	0.15	500
	KR19EE 3)	8	32	12.2	20	M8x1.25	10	11	0.6	15	-	0.15	500
22	KR22	10	36	13.2	23	M10x1	12	12	0.6	17.5	-	0.3	500
	KR22EE	10	36	13.2	23	M10x1	12	12	0.6	17.5	-	0.3	500
26	KR26	10	36	13.2	23	M10x1	12	12	0.6	17.5	-	0.3	500
	KR26EE	10	36	13.2	23	M10x1	12	12	0.6	17.5	-	0.3	500
30	KR30	12	40	15.2	25	M12x1.5	13	14	0.6	23	6	0.6	500
	KR30EE	12	40	15.2	25	M12x1.5	13	14	0.6	23	6	0.6	500
32	KR32	12	40	15.2	25	M12x1.5	13	14	0.6	23	6	0.6	500
	KR32EE	12	40	15.2	25	M12x1.5	13	14	0.6	23	6	0.6	500
35	KR35	16	52	19.6	32.5	M16x1.5	17	18	0.8	27.6	8	0.6	500
	KR35EE	16	52	19.6	32.5	M16x1.5	17	18	0.8	27.6	8	0.6	500
40	KR40	18	58	21.6	36.5	M18x1.5	19	20	0.8	31.5	8	1	500
	KR40EE	18	58	21.6	36.5	M18x1.5	19	20	0.8	31.5	8	1	500
47	KR47	20	66	25.6	40.5	M20x1.5	21	24	0.8	36.5	9	1	500
	KR47EE	20	66	25.6	40.5	M20x1.5	21	24	0.8	36.5	9	1	500
52	KR52	20	66	25.6	40.5	M20x1.5	21	24	0.8	36.5	9	1	500
	KR52EE	20	66	25.6	40.5	M20x1.5	21	24	0.8	36.5	9	1	500
62	KR62	24	80	30.6	49.5	M24x1.5	25	29	0.8	44	11	1	500
	KR62EE	24	80	30.6	49.5	M24x1.5	25	29	0.8	44	11	1	500
72	KR72	24	80	30.6	49.5	M24x1.5	25	29	0.8	44	11	1.1	500
	KR72EE	24	80	30.6	49.5	M24x1.5	25	29	0.8	44	11	1.1	500
80	KR80	30	100	37	63	M30x1.5	32	35	1	53	15	1.1	500
	KR80EE	30	100	37	63	M30x1.5	32	35	1	53	15	1.1	500
90	KR90	30	100	37	63	M30x1.5	32	35	1	53	15	1.1	500
	KR90EE	30	100	37	63	M30x1.5	32	35	1	53	15	1.1	500

1) Cam follower with stud designation
KR.. Cam follower with stud, with no seals, KR..EE Cam follower with stud with axial drag discs and seals, KRE.. Cam follower with stud with no seals, with eccentric collar, KRE.. EE Cam follower with stud with axial drag discs and seals and with eccentric collar.
2) Hole diameter for assembly of concentric cam follower without stud: d_1 H7
3) For 16 and 19 mm diameter the standard cam followers with stud on the head side are supplied with screwdriver slot and grease nipple. The version with built-in hexagonal socket and no grease nipple is identifiable by the SK suffix

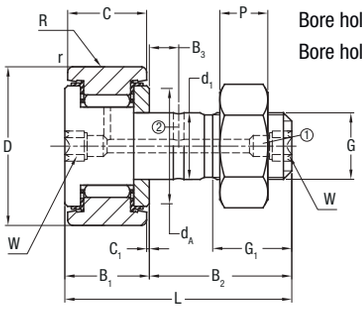

Bore hole 1 starting from D=22 mm
Bore hole 2 starting from D=30 mm

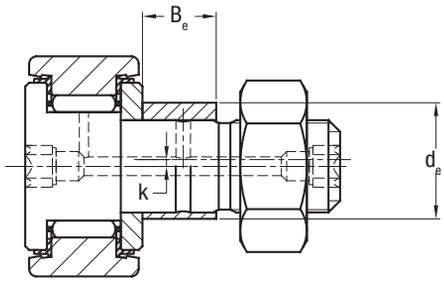

W mm	P mm	Eccentric bearing d_e 5) 6) mm	k 6) mm	B_e 5) mm	Load coefficients (N) 6) C_w	C_{uw} 8)	Stat. F_{or}	Speed limit greasing (min^{-1})	Weight of nut and washers Kg	Clamping torque Nm	∅ outer D mm
-	3.2	9	0.5	7	3150	450	3350	14000	0.02	3	16
-	3.2	9	0.5	7	3150	450	3350	14000	0.02	3	
-	4	11	0.5	9	3500	540	4000	11000	0.032	8	19
-	4	11	0.5	9	3500	540	4000	11000	0.032	8	
5	5	13	0.5	10	4550	730	5300	8000	0.047	15	22
5	5	13	0.5	10	4550	730	5300	8000	0.047	15	
5	5	13	0.5	10	5100	840	6400	8000	0.062	15	26
5	5	13	0.5	10	5100	840	6400	8000	0.062	15	
6	6	15	0.5	11	6800	1220	8600	5500	0.093	22	30
6	6	15	0.5	11	6800	1220	8600	5500	0.093	22	
6	6	15	0.5	11	7100	1290	9200	5500	0.104	22	32
6	6	15	0.5	11	7100	1290	9200	5500	0.104	22	
8	8	20	1.0	14	9700	1830	14300	3600	0.177	58	35
8	8	20	1.0	14	9700	1830	14300	3600	0.177	58	
8	9	22	1.0	16	10900	2090	15800	2900	0.255	87	40
8	9	22	1.0	16	10900	2090	15800	2900	0.255	87	
10	10	24	1.0	18	15400	3400	26000	2400	0.400	120	47
10	10	24	1.0	18	15400	3400	26000	2400	0.400	120	
10	10	24	1.0	18	16600	3800	29000	2400	0.473	120	52
10	10	24	1.0	18	16600	3800	29000	2400	0.473	120	
14	12	28	1.0	22	26000	6800	48000	1900	0.798	220	62
14	12	28	1.0	22	26000	6800	48000	1900	0.798	220	
14	12	28	1.0	22	28000	7200	53000	1900	1.038	220	72
14	12	28	1.0	22	28000	7200	53000	1900	1.038	220	
14	15	35	1.5	29	38500	11000	77000	1300	1.665	450	80
14	15	35	1.5	29	38500	11000	77000	1300	1.665	450	
14	15	35	1.5	29	40500	11700	83000	1300	2.032	450	90
14	15	35	1.5	29	40500	11700	83000	1300	2.032	450	

4) Convex radius in the standard version. The version with cylindrical outer ring is identifiable by the X suffix. E.g. KR40EEX
5) Hole diameter for assembly of the eccentric cam follower without stud: d_e H7
6) Dimensions of the eccentric bearing.
7) Fr and For load for cam follower without stud and no eccentric collar
8) Fatigue load coefficient
The KR concentric cam followers with stud are supplied with one clamping nut.
The KRE eccentric cam followers with stud are supplied with an eccentric bearing already fitted and one clamping nut.

CAM FOLLOWERS WITH THREADED STUD
GCU

Full complement needle followers
with outer diameter from 35 to 130 mm

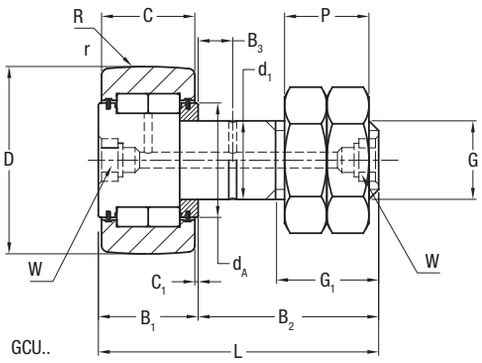

∅ outer D mm	Designation 1) GCU, GCU..MM	d_1 2) mm	L mm	B_1 mm MAX	B_2 mm	Threading G mm	G_1 mm	C mm	C_1 mm	d_A mm	B_3 mm	r mm	R 3) mm
35	35	16	52	19.6	32.5	M16x1.5	17	18	0.8	25.5	8	0.6	320
40	40	18	58	21.6	36.5	M18x1.5	19	20	0.8	28.6	8	1	400
47	47	20	66	25.6	40.5	M20x1.5	21	24	0.8	32.5	9	1	500
52	52	20	66	25.6	40.5	M20x1.5	21	24	0.8	33.6	9	1	500
62	62	24	80	30.6	49.5	M24x1.5	25	29	0.8	38	11	1	640
72	72	24	80	30.6	49	M24x1.5	25	29	0.8	38	11	1.1	640
80	80	30	100	37	63	M30x1.5	32	35	1	51	15	1.1	800
85	85 9)	30	100	37	63	M30x1.5	32	35	1	51	15	1.1	800
90	90	30	100	37	63	M30x1.5	32	35	1	51	15	1.1	800
100	100	36	117	42	75	M36x3	38	40	1	61	20	2	1000
110	110	36	117	42	75	M36x3	38	40	1	61	20	2	1000
120	120	42	136	48	88	M42x3	44	46	1	71	24	2	1200
130	130	42	136	48	88	M42x3	44	46	1	71	24	2	1200

1) Cam follower with stud designation
GCU.. Concentric cam follower with stud and convex outer ring
GCUL.. Concentric cam follower with stud and cylindrical outer ring
GCUR.. Eccentric cam follower with stud and convex outer ring
GCURL.. Eccentric cam follower with stud and cylindrical outer ring
No suffix Without guards
Suffix..MM With metal guards
2) Hole diameter for assembly of concentric cam follower without stud: d_1 H7
3) Convex radius in the standard version GCU.

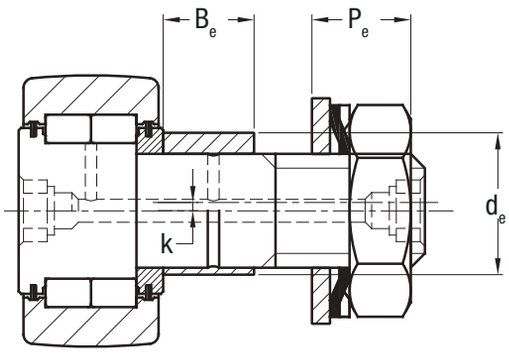

from GCUR35.. to GCUR52..

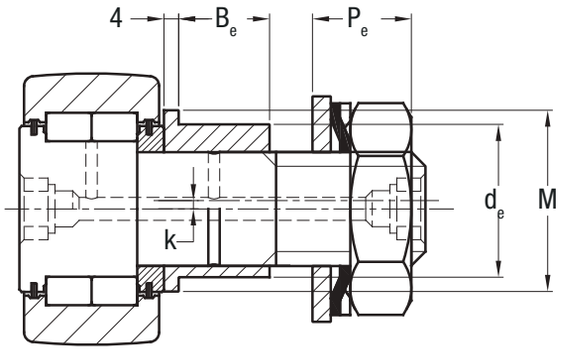

from GCUR62.. to GCUR130..

W mm	P 7) mm	Eccentric bearing					Load coefficients (KN) 6)			Greasing speed limit with grease (min^{-1})	Weight of nut and washers Kg	Clamping torque Nm	∅ outer D mm
		d_e 4) 5) mm	k 5) mm	M 5) mm	B_e 5) mm	P_e 8) mm	C_w	Din. F_r	Stat. For				
8	16	21	1.5	-	14	12.2	15.4	7.25	13.1	2200	0.215	64	35
8	18	24	1.5	-	16	13.4	18.7	12.1	21.8	2200	0.313	90	40
10	20	27	2	-	17.5	14.4	30.6	21.2	38.2	1600	0.5	120	47
10	20	27	2	-	17.5	14.4	30.6	21.2	38.2	1600	0.555	120	52
14	24	36	3	44	18	17.5	44.1	30.9	55.6	1400	1.035	220	62
14	24	36	3	44	18	17.5	50.8	52.7	84.1	1400	1.278	220	72
14	30	42	3	50	27	20.6	66.8	43.8	78.8	1000	2.07	450	80
14	30	42	3	50	27	20.6	75.8	68.1	122	1000	2.23	450	85
14	30	42	3	50	27	20.6	75.8	68.1	122	1000	2.47	450	90
17	36	48	3	56	32	24.6	82.1	76.6	135	840	3.38	740	100
17	36	48	3	56	32	24.6	89.7	107	161	840	3.86	740	110
19	42	54	3	62	39	26.8	124	107	193	740	5.1	1200	120
19	42	54	3	62	39	26.8	133	142	228	740	5.59	1200	130

4) Hole diameter for assembly of the eccentric cam follower without stud: d_e H7
5) Dimensions of the pivot with eccentric collar
6) Fr and For load for cam follower without stud and no eccentric collar
7) The GCU concentric cam followers with stud are supplied with double clamping nut.
8) The GCUR eccentric cam followers with stud are supplied with eccentric bearing already fitted, clamping nut, cogged washer and support surface washer
9) Product available on request

CAM FOLLOWERS WITH STUD
GC ..MINI

Full complement needle rollers with outer diameter up to 15mm.

GC, GCL series without seal.

∅ outer D mm	Designation [1] GC, GCL	d_1 [2] mm	L mm	B_1 mm	B_2 mm	Threading G mm	G_1 mm	C mm	C_1 mm	d_A mm	r mm	R [3] mm
10	10	4	19.5	8.5	11	M4x0.7	6	8	0.25	8.4	0.2	130
11	11	4	19.5	8.5	11	M4x0.7	6	8	0.25	8.4	0.2	130
12	12	5	22.5	9.5	13	M5x0.8	7	9	0.25	10.3	0.2	130
13	13	5	22.5	9.5	13	M5x0.8	7	9	0.25	10.3	0.2	130
14	14	6	26	10	16	M6x1	8	9	0.25	11.8	0.3	130
15	15	6	26	10	16	M6x1	8	9	0.25	11.8	0.3	130

1) Cam follower with stud designation
GC.. Concentric cam follower with stud with convex outer ring
GCL.. Concentric cam follower with stud with cylindrical outer ring
2) Hole diameter for assembly d_1 H7
3) Convex radius for GC version..

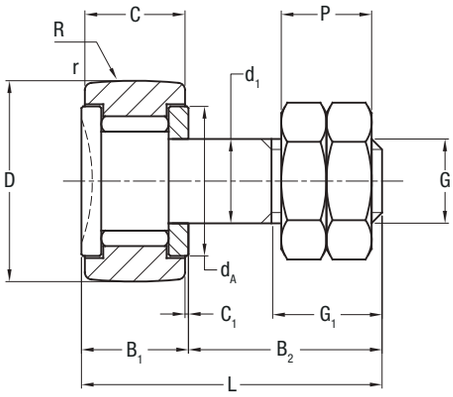

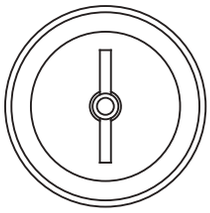

P mm	Load coefficients (N)			Speed limit with grease (min^{-1})	Weight Kg	Clamping torque Nm	∅ outer D mm
	C_w	Din. F_r	Stat. F_{or}				
6	2100	520	960	7500	0.006	0.9	10
6	2400	520	960	7400	0.007	0.9	11
5.4	2900	900	1700	6000	0.011	1.8	12
5.4	3200	900	1700	6000	0.011	1.8	13
6.4	3400	1500	2800	5500	0.016	3	14
6.4	3600	1500	2800	5500	0.018	3	15

The concentric cam followers with stud in the GC Mini series are supplied with two clamping nuts.

SMALL CAM ROLLERS WITHOUT STUD
FP

Full complement needle followers
with outer diameter from 10 to 15mm

∅ outer D mm	Designation [1] FP, FPL	d [2] mm	B mm	C mm	d_A mm	r mm	r_1 mm	R [3] mm
10	3 10	3	8.7	8	8.5	0.2	0.15	130
11	3 11 [4]	3	8.7	8	8.5	0.2	0.15	130
12	4 12	4	9.7	9	9.9	0.2	0.15	130
13	4 13 [4]	4	9.7	9	9.9	0.2	0.15	130
14	4 14 [4]	4	10.2	9	11.8	0.3	0.15	130
15	4 15	4	10.2	9	11.8	0.3	0.15	130

1) Designation
FP outer convex ring
FPL outer cylindrical ring
2) Diameter of the pivot to insert in the recommended hole: h5
3) Version FP convex radius
4) Product available on request

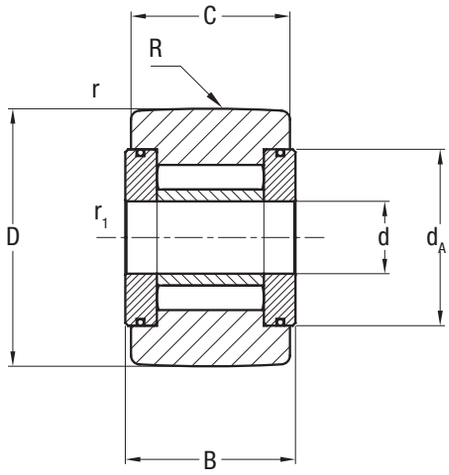

Load coefficients (N)			Grease speed limit (min^{-1})	Weight Kg
C_w	Din F_r	Stat. F_{or}		
2.2	2200	2200	8200	0.004
2.3	2300	2300	8200	0.005
3.1	3500	3500	6800	0.006
3.2	3800	3800	6800	0.008
3.3	3900	3900	6800	0.010
3.3	3900	3900	6800	0.011

FULL COMPLEMENT NEEDLE ROLLERS
FG ..SW

Full complement needle followers
with outer diameter from 16 to 270 mm

∅ outer D mm	Designation [1] FG ..SW	d [2] mm	B mm	C mm	D_1 mm	d_A [3] mm	r mm	r_1 mm	R_p [4] mm
16	5 16	5	12	11	7.1	10.4	0.3	0.3	500
19	6 19	6	12	11	8.1	12.6	0.3	0.3	500
24	8 24	8	13	12	10.8	15.5	0.3	0.3	600
	8 24 15	8	15	14	10.8	15.5	0.3	0.3	600
30	10 30	10	15	14	13.8	22	0.6	0.3	700
32	12 32	12	15	14	14.6	22	0.6	0.3	700
35	15 35	15	19	18	18.7	26	0.6	0.3	800
40	17 40	17	21	20	21.1	31	0.6	0.3	1000
47	20 47	20	25	24	25.7	35	1	0.3	1200
52	25 52	25	25	24	29.5	35	1	0.3	1200
62	30 62	30	29	28	34.8	45	1	0.3	1500
72	35 72	35	29	28	39.9	45	1	0.6	1500
80	40 80	40	32	30	46.6	61.1	1	0.6	1700
85	45 85[5]	45	32	30	51	61.1	1	0.6	1700
90	50 90	50	32	30	59	71	1	0.6	1700
100	55 100	55	36	34	61.3	71	1.5	0.6	2000
110	60 110	60	36	34	67	77	1.5	0.6	2000
120	65 120	65	42	40	74	83	1.5	0.6	2500
125	70 125[5]	70	42	40	80	91	1.5	0.6	2500
130	75 130[5]	75	42	40	82	94	1.5	0.6	2500
140	80 140	80	48	46	87	100	2	1	2800
150	85 150[5]	85	48	46	94	105	2	1	2800
160	90 160[5]	90	54	52	100.9	115	2	1	3000
170	95 170	95	54	52	107	120	2	1	1200 [6]
180	100 180	100	65	63	112	128	2	1.5	1200 [6]
200	110 200[5]	110	65	63	122.5	138	2	1.5	1400 [6]
215	120 215[5]	120	65	63	130.1	145	2	1.5	1400 [6]
230	130 230[5]	130	78	75	150	168	3	1.5	1400 [6]
250	140 250[5]	140	78	75	162	183	3	1.5	1600 [6]
270	150 270[5]	150	78	75	168	188	3	1.5	1600 [6]

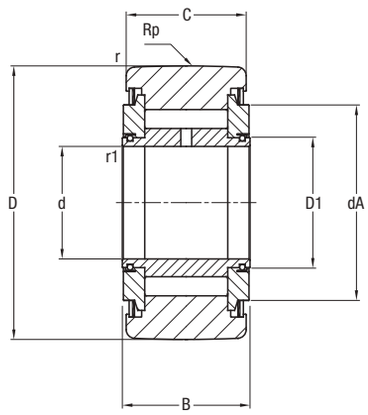

Load coefficients (N)			Speed limit greasing (min^{-1})	Weight Kg	Designation FG ..SW
C_w	Din F_r	Stat. F_{or}			
4900	4900	5300	5000	0.016	5 16
5600	5800	6600	4100	0.019	6 19
7600	10000	10000	3400	0.037	8 24
9200	13000	13000	3400	0.044	8 24 15
13000	12000	15000	2600	0.066	10 30
13000	11000	16000	2500	0.077	12 32
17000	15000	24000	2000	0.103	15 35
22000	21000	34000	1800	0.155	17 40
27000	22000	35000	1500	0.295	20 47
29000	33000	54000	1400	0.31	25 52
38000	43000	69000	1100	0.49	30 62
43000	56000	87000	1000	0.67	35 72
52000	66000	110000	870	0.89	40 80
54000	68000	110000	810	0.97	45 85 5)
49000	57000	93000	710	1.04	50 90
66000	100000	150000	670	1.35	55 100
71000	120000	170000	620	1.65	60 110
81000	140000	210000	560	2.35	65 120
84000	140000	220000	530	2.5	70 125 5)
84000	140000	220000	510	2.65	75 130 5)
110000	190000	280000	480	3.4	80 140
110000	200000	300000	440	4	85 150 5)
130000	320000	340000	420	5.3	90 160 5)
130000	250000	390000	390	6	95 170
180000	280000	460000	360	8.05	100 180
200000	380000	550000	340	10	110 200 5)
220000	460000	620000	320	11.5	120 215 5)
250000	340000	560000	280	15.5	130 230 5)
280000	410000	670000	260	18.5	140 250 5)
300000	540000	860000	250	22	150 270 5)

1) Cam follower without stud designation
FG..SW Cam follower without stud with optimised outer profile ring without seal
Suffix..EE With plastic seals available up to outer diameter of 90 mm e.g. FG1740EESW
Suffix ..EEM With metal seals e.g. FG1740EEMSW
FGL..SW Cam follower with cylindrical outer ring

2) Recommended diameter for pivot: h5

3) Minimum recommended abutment support diameter in the event of excessive axial load or if there are vibrations

4) Convex radius in the central part to contact pressure calculation

5) Product available on request

6) Constant radius crowning

FULL COMPLEMENT ROLLERS
FGU LIGHT SERIES

Full complement rollers with outer diameter from 35 to 270 mm

∅ outer D mm	Designation [1] FGU, FGU ..MM	d [2] mm	B mm	C mm	D_1 mm	d_A [3] mm	r mm	r_1 mm	R [4] mm
35	15 35	15	19	18	19.0	25.4	1.0	0.3	320
40	17 40	17	21	20	22.0	28	1.0	0.3	400
47	20 47	20	25	24	25.8	33.5	1.0	0.3	500
52	25 52	25	25	24	30.0	38.2	1.0	0.3	500
62	30 62	30	29	28	36.8	45.9	1.0	0.3	640
72	35 72 [5]	35	29	28	44.0	53.6	1.0	0.6	640
80	40 80 [5]	40	32	30	49.5	59.3	1.0	0.6	800
85	45 85 [5]	45	32	30	54.0	63.1	1.5	0.6	800
90	50 90 [5]	50	32	30	59.5	68.8	1.5	0.6	800
100	55 100 [5]	55	36	34	64.0	75.8	1.5	0.6	800
110	60 110 [5]	60	36	34	69.5	81.5	1.5	0.6	800
120	65 120 [5]	65	42	40	74.5	86.7	2.0	0.6	900
125	70 125	70	42	40	79.6	91.8	2.0	0.6	900
130	75 130 [5]	75	42	40	84.0	97	2.0	0.6	900
140	80 140 [5]	80	48	46	90.0	102	2.0	1.0	1000
150	85 150 [5]	85	48	46	94.0	108.5	2.0	1.0	1000
160	90 160 [5]	90	54	52	100.0	114.7	2.0	1.0	1200
170	95 170 [5]	95	54	52	106.7	121.2	2.0	1.0	1200
180	100 180 [5]	100	65	63	113.0	127.6	2.0	1.5	1400
200	110 200 [5]	110	65	63	122.0	137	3.0	1.5	1400
215	120 215 [5]	120	65	63	132.0	149.3	3.0	1.5	1400
230	130 230 [5]	130	78	75	143.0	160.6	3.0	1.5	1600
250	140 250 [5]	140	78	75	151.0	168	3.0	1.5	1600
270	150 270 [5]	150	78	75	162.0	179.5	3.0	1.5	1600

1) Cam follower without stud designation:
FGU.. Cam follower without stud with optimised outer profile ring and no seals
FGU ..MM With metal seals (e.g. FGU 35 72 MM)
FGUL.. Cam follower with cylindrical outer ring

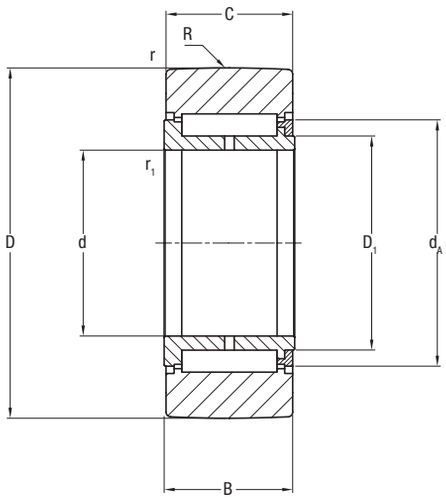

Load coefficients (N)			Speed limit greasing (min^{-1})	Weight Kg	Designation [1]
C_w	Din. F_r	Stat. F_{or}			FGU, FGU ..MM
15000	8100	13000	2200	0.099	15 35
19000	15000	21000	2000	0.142	17 40
28000	25000	30000	1800	0.239	20 47
27000	17000	28000	1500	0.276	25 52
41000	22000	36000	1200	0.461	30 62
52000	46000	67000	1100	0.629	35 72 [5]
59000	50000	72000	1000	0.831	40 80 [5]
59000	38000	62000	890	0.895	45 85 [5]
61000	38000	62000	830	0.963	50 90 [5]
72000	37000	60000	730	1.350	55 100 [5]
90000	70000	110000	700	1.672	60 110 [5]
110000	89000	140000	640	2.364	65 120 [5]
110000	84000	140000	600	2.480	70 125
110000	79000	130000	670	2.611	75 130 [5]
140000	120000	190000	540	3.520	80 140 [5]
140000	130000	200000	500	4.077	85 150 [5]
180000	160000	260000	480	5.227	90 160 [5]
190000	180000	290000	460	5.943	95 170 [5]
240000	240000	390000	430	8.178	100 180 [5]
260000	290000	470000	390	10.343	110 200 [5]
280000	320000	510000	370	11.782	120 215 [5]
350000	340000	550000	340	15.859	130 230 [5]
380000	400000	650000	310	19.034	140 250 [5]
430000	590000	810000	310	20.014	150 270 [5]

2) Recommended diameter for pivot: h5
3) Minimum recommended abutment support diameter in the event of excessive axial load or if there are vibrations
4) Convex radius in the central part to contact pressure calculation
5) Product available on request

FULL COMPLEMENT ROLLERS
FGU HEAVY SERIES

Full complement rollers with outer diameter from 42 to 320 mm.

∅ outer D mm	Designation [1] FGU, FGU ..MM	d [2] mm	B mm	C mm	D_1 mm	d_A [3] mm	r mm	r_1 mm	R [4] mm
42	15 42	15	19	18	19.0	25.4	1	0.3	320
47	17 47	17	21	20	22.0	28	1	0.3	400
52	20 52	20	25	24	25.8	33.5	1	0.3	500
62	25 62	25	25	24	30.0	38.2	1	0.3	500
72	30 72	30	29	28	36.8	45.9	1	0.3	640
80	35 80	35	29	28	44.0	53.6	1	0.6	640
90	40 90 [5]	40	32	30	49.5	59.3	1	0.6	800
100	45 100	45	32	30	54.0	63.1	1.5	0.6	800
110	50 110	50	32	30	59.5	68.8	1.5	0.6	800
120	55 120	55	36	34	64.0	75.8	1.5	0.6	800
130	60 130	60	36	34	69.5	81.5	1.5	0.6	800
140	65 140	65	42	40	74.5	86.7	2	0.6	900
150	70 150	70	42	40	79.6	91.8	2	0.6	900
160	75 160 [5]	75	42	40	84.0	97	2	0.6	900
170	80 170	80	48	46	90.0	102	2	1	1000
180	85 180 [5]	85	48	46	94.0	108.5	2	1	1000
190	90 190 [5]	90	54	52	100.0	114.7	2	1	1200
200	95 200	95	54	52	106.7	121.2	2	1	1200
215	100 215	100	65	63	113.0	127.6	2	1.5	1400
240	110 240 [5]	110	65	63	122.0	137	3	1.5	1400
260	120 260 [5]	120	65	63	132.0	149.3	3	1.5	1400
280	130 280 [5]	130	78	75	143.0	160.6	3	1.5	1600
300	140 300	140	78	75	151.0	168	3	1.5	1600
320	150 320 [5]	150	78	75	162.0	179.5	3	1.5	1600

1) Cam follower without stud designation
FGU.. Cam follower without stud with optimised outer profile ring and no seals
FGU ..MM With metal seals e.g. FGU 35 80 MM
FGUL.. Cam follower without stud with cylindrical outer ring

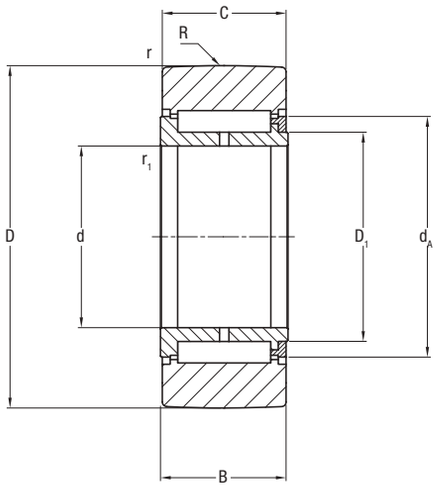

Load coefficients (N)			Speed limit greasing (min-1)	Weight Kg	Designation 1)
C_w	Din F_r	Stat. F_{or}			FGU, FGU ..MM
23000	26000	26000	2200	0.16	15 42
25000	30000	30000	2000	0.22	17 47
34000	40000	40000	1800	0.31	20 52
39000	50000	50000	1500	0.45	25 62
58000	70000	76000	1200	0.70	30 72
64000	88000	88000	1100	0.73	35 80
74000	98000	98000	1000	1.13	40 90 5)
83000	120000	120000	890	1.40	45 100
90000	130000	130000	830	1.70	50 110
110000	150000	160000	730	2.27	55 120
120000	180000	180000	700	2.68	60 130
140000	220000	220000	640	3.60	65 140
150000	240000	240000	600	4.17	70 150
150000	260000	260000	570	4.75	75 160 5)
180000	330000	330000	540	6.16	80 170
190000	350000	350000	500	6.87	85 180 5)
240000	400000	400000	480	8.57	90 190 5)
250000	420000	420000	460	9.50	95 200
310000	570000	570000	430	13.54	100 215
330000	630000	630000	390	13.95	110 240 5)
350000	670000	670000	370	21.19	120 260 5)
460000	860000	860000	340	27.63	130 280 5)
480000	910000	910000	310	31.73	140 300
500000	930000	930000	310	35.97	150 320 5)

2) Recommended diameter for pivot: h5
3) Minimum recommended abutment support diameter in the event of excessive axial load or if there are vibrations
4) Convex radius in the central part to contact pressure calculation
5) Product available on request

FULL COMPLEMENT NEEDLE ROLLERS
RNA 11000

Ring with full complement needle rollers, mechanically fastened and separate inner ring. Outer diameter from 19 to 90 mm

∅ outer D mm	Designation RNA ..B6	F_w 2) mm	D 1) mm	C nom. mm	C tol. mm	E_w mm	r min. mm	Weight g	Load coefficients (N) 2) C_w
19	11005 B6	7.3	19	12	0 -0.10	7.3	0.35	19	5100
22	11007 B6	9.7	22	12	0 -0.10	14.7	0,35	25	6000
24	14601 B6	12.1	24	12	0 -0.10	17.1	0.35	27	6200
28	11009 B6	12.1	28	12	-0.20 -0.30	17.1	0.35	42	7400
32	11012 B6	17.6	32	15	-0.20 -0.30	22.6	0.35	57	10800
35	11015 B6	20.8	35	15	-0.20 -0.30	25.8	0.65	62	10800
42	11017 B6	23.9	42	15	-0.20 -0.30	28.9	0.65	98	13400
47	11020 B6	28.7	47	18	-0.20 -0.30	34.7	0.65	133	16800
52	11025 B6	33.5	52	18	-0.20 -0.30	39.5	0.65	152	17200
62	11030 B6	38.2	62	22	-0.20 -0.30	44.2	0.65	275	28500
72	11035 B6	44	72	22	-0.22 -0.34	50	0.65	370	32000
80	11040 B6	49.7	80	22	-0.22 -0.34	55.7	0.85	450	34000
85	11045 B6	55.4	85	22	-0.22 -0.34	62.4	0.85	480	33500
90	11050 B6	62.1	90	24	-0.22 -0.34	68.1	0.85	540	32500

1) Tolerances on the D dimension: h7
2) Recommended tolerance per F_w diameter of the pivot without the use of inner ring: h5
3) Misalignment permitted for convexing the B6 ring: 1.5/1000

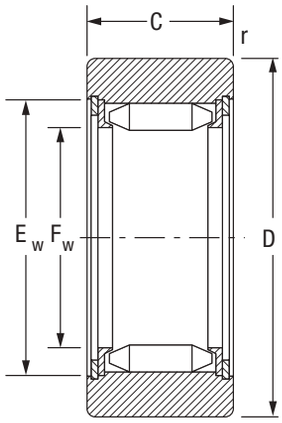

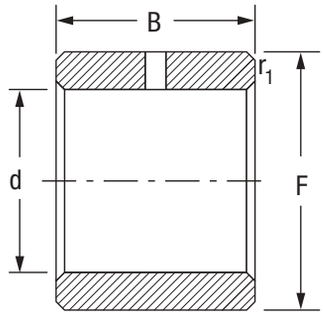

Load coefficients (N) [2]		Speed limit with greasing (min^{-1})	Inner rings									
Din F_r	Stat. F_{or}		Shaft ∅ mm	Designation BIC series	d mm	F mm	B nom. mm	B tol. mm	r_1 min mm	Weight g	For cam follower type	∅ outer D mm
4050	4050	8700	-	-	-	-	-	-	-	-	-	19
5100	5200	7000	-	-	-	-	-	-	-	-	-	22
4700	5600	5800	-	-	-	-	-	-	-	-	-	24
7100	7100	5800	-	-	-	-	-	-	-	-	-	28
9100	12700	4200	12	BIC 1012	12	17.6	15	0 -0.10	0.35	16	11012	32
9100	13400	3650	15	BIC 1015	15	20.8	15	0 -0.10	0.65	18	11015	35
13900	18500	3200	17	BIC 1017	17	23.9	15	0 -0.10	0.65	26	11017	42
15400	23000	2700	20	BIC 1020	20	28.7	18	0 -0.10	0.65	46	11020	47
16500	24700	2330	25	BIC 1025	25	33.5	18	0 -0.10	0.65	54	11025	52
31500	49500	2050	30	BIC 2030	30	38.2	22	0 -0.10	0.65	74	11030	62
41000	61000	1800	35	BIC 2035	35	44	22	0 -0.12	0.65	93	11035	72
47000	68000	1620	40	BIC 2040	40	49.7	22	0 -0.12	0.85	115	11040	80
47500	69000	1450	45	BIC 2045	45	55.4	22	0 -0.12	0.85	139	11045	85
51000	68000	1300	50	BIC 11050	50	62.1	24	0 -0.12	0.85	196	11050	90

CAM FOLLOWERS
WITH HEAVY STUD PFL

6.10

Cam followers with high precision and load capacity.
Outer diameter of cam follower without stud from 10 to 22 mm

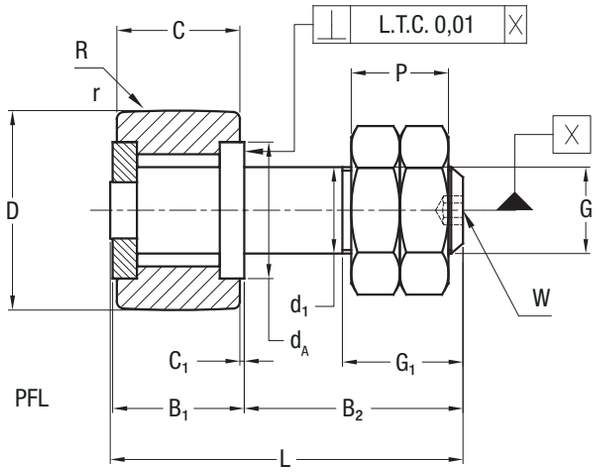

∅ outer D mm	Designation 1) PF.. PFL..	d_1 2) mm	L mm	B_1 mm	B_2 mm	Threading G mm	G_1 mm	C mm	C_1 mm	d_A mm	r mm	R 3) mm
10	10	6	26.5	10	16	M6 x 1	8	9	0.5	8.5	0.5	800
11	11	6	26.5	10	16	M6 x 1	8	9	0.5	8.5	0.5	800
12	12	6	26.5	10	16	M6 x 1	8	9	0.5	9.9	0.5	800
13	13	6	26.5	10	16	M6 x 1	8	9	0.5	9.9	0.05	800
14	14	8	31.5	11	20	M8 x 1.25	10	10	0.5	11.8	0.5	800
15	15	8	31.5	11	20	M8 x 1.25	10	10	0.5	11.8	0.5	800
16	16	8	32.5	12	20	M8 x 1.25	10	11	0.5	13.3	1	800
19	19	10	36.5	13	23	M10 x 1.25	12	12	0.5	15.3	1	800
22	22	10	36.5	13	23	M10 x 1.25	12	12	0.5	18.2	1	800

1) Designation PFL: cam follower with stud and outer cylindrical ring
Designation PF: cam follower with stud and outer convex ring R=800 mm
2) The diameter of the stud is calculated with h6 tolerance. Greasing holes are not foreseen.
3) Convex radius for PF version

W mm	P mm	Load coefficients (N)			Speed limit with grease (min^{-1})	Weight Kg	Clamping torque Nm	∅ outer D mm
		C_w	Din. F_r	Stat. F_{or}				
3	6.4	2400	1500	2600	13000	0.011	3	PFL 10
3	6.4	2900	1500	2800	13000	0.013	3	PFL 11
3	6.4	3000	1500	2800	11400	0.014	3	PFL 12
3	6.4	3300	1500	2800	11400	0.015	3	PFL 13
3	8	4200	3200	4200	10100	0.025	8	PFL 14
3	8	4700	3200	4900	10100	0.027	8	PFL 15
3	8	4900	2900	5400	9300	0.031	8	PFL 16
4	10	6300	5300	7900	7600	0.046	20	PFL 19
4	10	6200	5300	8100	6300	0.06	20	PFL 22

CAM FOLLOWERS
DOUBLE PFDL

6.11

For assembling on double contact cam movements.
Outer diameter of cam follower without stud from 24 to 32 mm

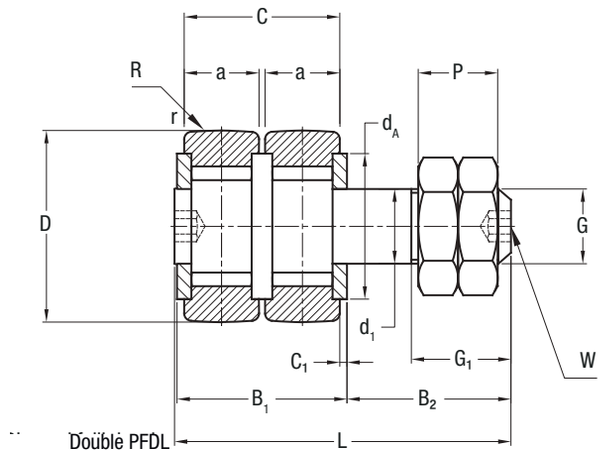

∅ outer D mm	Designation 1) PFDL	d_1 2) mm	L mm	B_1 mm	B_2 mm	Threading G mm	G_1 mm	C mm	a mm	C_1 mm	d_A mm	r mm	R 3) mm
24	PFDL 24.10	10	45	23	21.5	M10 x 1.25	12.5	21	10	1	17.9	1.6	200
28	PFDL 28.10	12	45	22	22.5	M12 x 1.5	13.5	21	10	0.5	20.5	1.6	200
32	PFDL 32.10	12	45	22	22.5	M12 x 1.5	13.5	21	10	0.5	24.5	1.8	250
32	PFDL 32.14	12	60	30	29.5	M12 x 1.5	19	29	14	0.5	24.5	1.8	250

1) Designation PFDL, cam follower with outer cylindrical ring
Designation PFD.. cam follower with stud and outer convex rings
2) The diameter of the stud is calculated with h6 tolerance
3) Convex radius for the PFD version

W mm	P mm	Load coefficients (N)			Speed limit with grease (min^{-1})	Weight Kg	Clamping torque Nm	∅ outer D mm
		Din C_w 4)	Din. F_r 5)	Stat. F_{or} 5)				
4	10	6700	2400	4400	3400	0.086	20	PFDL 24.10
5	12	7500	4100	7600	2900	0.116	26	PFDL 28.10
5	12	9800	4100	7600	2600	0.144	26	PFDL 32.10
5	12	13000	3000	5500	2600	0.199	26	PFDL 32.14

4) The load coefficient refers to each cam follower without stud of the two cam follower with stud components
5) With load applied to the opposite cam follower on the stud side

NEEDLE AND ROLLER THRUST BEARINGS

7

PAGE 128 7.1 TECHNICAL SPECIFICATIONS

PAGE 130 7.2 MOUNTING ARRANGEMENTS

PAGE 132 7.3 NEEDLE THRUST BEARINGS AND PLATES

PAGE 138 7.4 ROLLER AND NEEDLE THRUST BEARINGS PLATES

NEEDLE AND ROLLER THRUST BEARINGS
TECHNICAL SPECIFICATIONS

The rolling elements of a thrust bearing are retained and guided in radial pockets within the cage (1). The latter is itself retained in relation to the plate (2) by means of a steel ring (3). This assembly of parts is easy to handle and install and to provide a high axial load capacity whilst occupying minimal space.
The design of Nadella thrust bearings serves to minimized the friction between the rolling elements and the cage that guides them.
For correct installation and adequate oil lubrication, the coefficient of friction will be between 0.003 and 0.004 for needle thrust bearings and between 0.004 and 0.005 for roller thrust bearings.
This result is due principally to the design of the onepiece steel cage (1) which has a special curvature that guides the rolling elements by their ends along their centre-lines.
Thus, the loads imposed on the cage by the rollers cannot create components parallel to the axis of rotation and therefore no increase in internal friction is generated, and correct operation without wear or overheating is ensured. In addition, this special curvature gives the steel cage great rigidity and being relatively thin provides maximum space for the lubricant.

TYPES OF THRUST BEARINGS

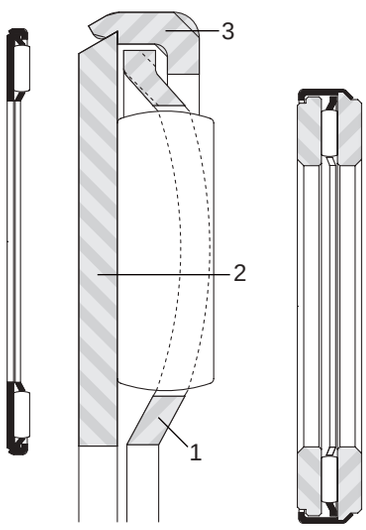

AX **AXZ**

THRUST PLATES
The plate incorporated in the thrust bearing is made from hardened bearing steel and forms one of the raceways for the rolling elements. The opposing raceway is generally provided by a separate thrust plate of similar design supplied by Nadella. When the thrust bearing is centred by the revolving part, the thrust plate must be centred by the stationary part and vice versa. If the revolving part and the stationary part are noticeably eccentric to each other, the thrust bearing with integral plate must without exception be centred by the revolving part (see mounting examples on pages 140 and 141).
The second raceway for the rolling elements may also be formed by the face of a shoulder or an inserted ring, provided these have the correct geometrical dimensions and hardness.

THRUST BEARINGS WITH THRUST PLATE
Thrust bearings type AXZ and ARZ have two thrust plates retained by a steel ring giving protection against the entry of dirt and metal particles whilst at the same time assisting retention of the lubricant.

OPERATION
When the ring of rolling elements begins to rotate, it is automatically centred in relation to the shaft axis. Thus the thrust bearing does not need to be precisely centred by the incorporated plate. Hence it is possible to align the bearing (on the shaft or in the housing) allowing wide tolerances to be used and without surface hardening.
This enables costs to be reduced. The same feature applies to centring of the thrust plate.

Thrust bearings with incorporated plate	Separate thrust plates	Thrust bearings with plate and thrust plate incorporated
Needle thrust bearings AX thin series AX thick series	CP thin series CP thick series	Needle thrust bearings AXZ thick series
		Roller thrust bearings ARZ light series

Needle thrust bearings with a thin plate are of minimal thickness and are particularly economic to use. They should be considered whenever the degree of support and rotational accuracy permits.

THICKNESS AND AXIAL RUN-OUT TOLERANCES

	Internal Dc1 mm	Thickness tolerance µm	Axial run-out max
Axial run-out max	Dc1 ≤ 60 60 < Dc1 ≤ 90 90 < Dc1 ≤ 120	+ 30/- 40 1) + 50/- 60 2) + 50/- 60 2)	20 1) 25 2) 30 2)
Thrust plates (thin)	Dc1 ≤ 60 60 < Dc1 ≤ 90 90 < Dc1 ≤ 120	+ 30/- 40 1) + 50/- 50 2) + 50/- 50 2)	20 1) 25 2) 30 2)
Needle thrust bearings (thick) Roller thrust bearings	Dc1 ≤ 120 120 < Dc1 ≤ 180 180 < Dc1 ≤ 250	+ 50/- 60 + 50/- 110 + 50/- 160	5 * 7 * 10 *
Thrust plates (thick)	Dc1 ≤ 120 120 < Dc1 ≤ 180 180 < Dc1 ≤ 250	+ 50/- 50 + 50/- 100 + 50/- 150	5 * 7 * 10 *

(1) Under min. load of 150 N
(2) Under min. load of 250 N

SUPPORTING FACES

For smooth running operation of needle or roller thrust bearings, it is necessary that their supporting faces should be parallel.
For a thrust bearing with intermediate thrust plate, the permissible degree of deviation from true parallelism between the two supporting faces should be no more than 1 min. (or approx. 0.3 per 1000).
For a thrust bearing without intermediate thrust plate, the deviation must be no more than 1 min. 30 sec. (or approx. 0.45 per 1000).
Thin needle thrust bearings and thin thrust plates must be supported on a flat, rigid and continuous face throughout the area of circulation of the needles bounded by dimensions Eb and Ea.
Thick needle thrust bearings and thick thrust plates can be supported on a more restricted or discontinuous shoulder, provided that the deflection of the plate under load does not endanger the smooth operation of the thrust bearing or the axial run-out required.
Since roller thrust bearings generally run under considerable loads, their incorporated plate and thrust plate should be supported on a shoulder covering the whole area of circulation of the rollers bounded by dimensions Eb and Ea.
Where an application does not involve the use of a thrust plate, the surface forming the second raceway must:

- Extend at least across the whole area of circulation of the rolling elements between dimensions Eb and Ea;
- Possess a suitable surface finish (≤0.5 µm C.L.A.) and sufficient hardness in relation to the load to be supported.

A hardness of 58-64 HRC enables thrust bearings to carry their full load capacity. Lower hardness values reduce the capacities shown in the tables of dimensions (see Technical Section).

TOLERANCES FOR CENTRING SUPPORTS

Centring on the shaft: h10 on dimension Dc1 for thrust bearings or thrust plates.
Centring in the housing: H10 on dimension D for thrust bearings and dimension d1 for thrust plates.

LOAD RATINGS

Minimum axial load

Slippage can occur if the applied axial load is too light and the operating speed of the needle thrust bearings is high – particularly if accompanied by inadequate lubrication. For satisfactory operation, a certain minimum load must be applied to a needle thrust bearing which
can be calculated from:
Fa min = C0/2200 [kN]

Where:
C0 static load rating [kN]
Fa min minimum axial load [kN]

COEFFICIENT OF FRICTION

In general, the coefficient of friction of a thrust bearing (consisting of a needle thrust bearing and thrust plate) is defined as the friction torque, divided by the product of the applied load and the bearing pitch radius. This coefficient of friction is not a constant value, but will vary considerably with load, speed and lubricant.
Generally, the coefficient of friction becomes smaller as the load is increased, and larger as the speed is increased.
It is suggested that a value of 0.008 as a conservative estimate.

LUBRICATION

Oil is the preferred lubricant for needle thrust bearings and an ample oil flow is absolutely necessary for high speeds or for moderate speeds when the load is relatively high.
When the application must utilize grease lubrication, the needle thrust bearing should be ordered pre-greased.
When the speeds are low and rotation is not continuous, the initial charge of grease may be suitable for the life of the application.
When the speeds are moderate, the designer must provide for frequent re-greasing. Because the needle rollers tend to expel the lubricant radially outward, relubrication passages should be directed to the bore of the cage whether oil or grease is used as the lubricant.

SPECIAL DESIGNS

Needle thrust bearings and thrust plates are made to special dimensions and configurations, as well as from special materials – when quantities permit economical

NEEDLE AND ROLLER THRUST BEARINGS
MOUNTING ARRANGEMENTS

NEEDLE THRUST BEARINGS WITH THIN THURST PLATE

ohne Gegenscheibe

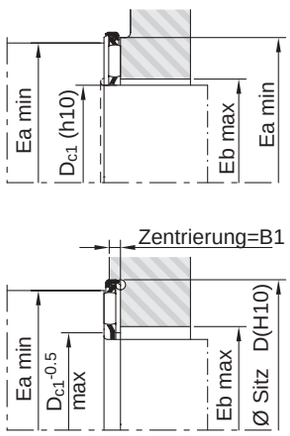

mit dünner Gegenscheibe

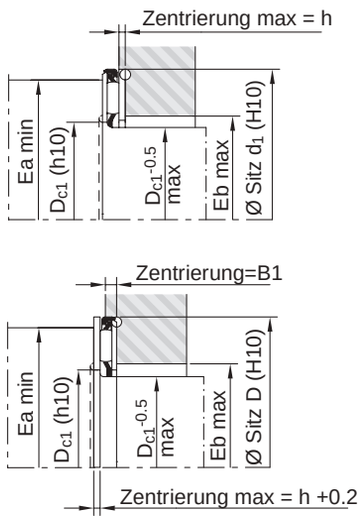

mit dicker Gegenscheibe

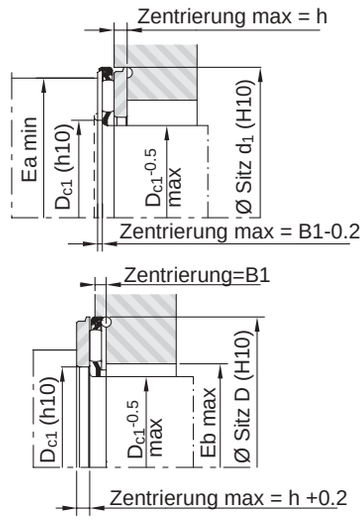

NEEDLE THRUST BEARINGS WITH THICK PLAT OR PLATE OR LIGHT SERIES ROLLER THRUST BEARINGS

ohne Gegenscheibe

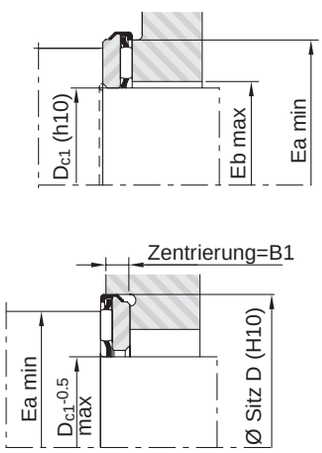

mit dünner Gegenscheibe

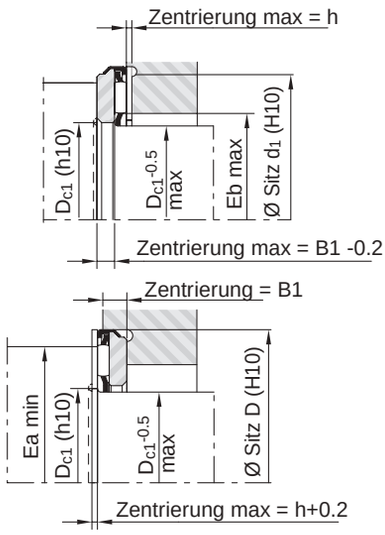

mit dicker Gegenscheibe

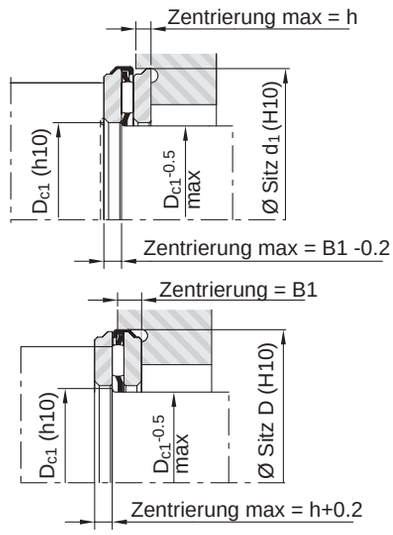

MOUNTING FOR ECCENTRIC OPERATION

7.2

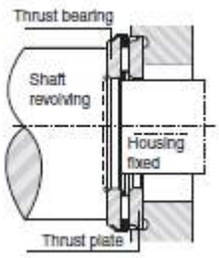

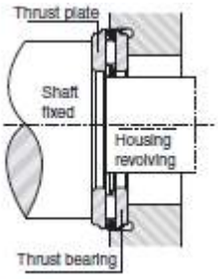

NEEDLE THRUST BEARINGS AXZ OR ROLLER THRUST BEARINGS ARZ

Mounting for high speed rotation

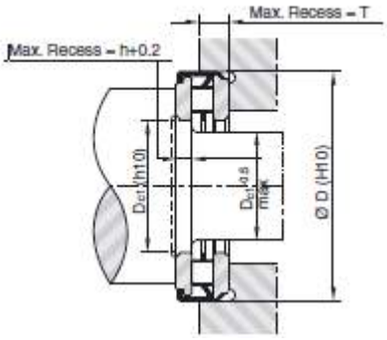

Mounting for slow speed rotation or oscillating motion

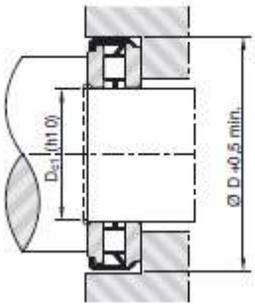

NEEDLE THRUST BEARINGS
AX THIN AND THICK SERIES

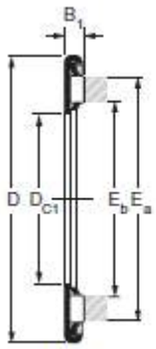

AX thin

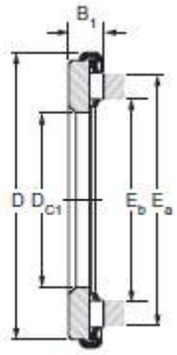

AX thick

Shaft ∅ mm	Designation		DC1 mm	D mm	B1 mm	Eb mm	Ea mm	Load ratings		Speed rating oil min-1	Weight kg
	AX thin series	AX thick series						Dyn. C kN	Stat. Co kN		
5	AX 5 13		5	13	2.3	6.3	10.9	3.00	5.70	25000	0.001
		AX 3.5 5 13	5	13	3.5	6.3	10.9	3.00	5.70	25000	0.002
6	AX 6 14		6	14	2.3	7.3	11.9	3.15	6.35	22000	0.001
		AX 3.5 6 14	6	14	3.5	7.3	11.9	3.15	6.35	22000	0.002
7	AX 7 15		7	15	2.3	8.3	12.9	3.55	7.60	22000	0.002
		AX 3.5 7 15	7	15	3.5	8.3	12.9	3.55	7.60	22000	0.003
8	AX 8 16		8	16	2.3	9.3	13.9	3.70	8.30	22000	0.002
		AX 3.5 8 16	8	16	3.5	9.3	13.9	3.70	8.30	22000	0.003
9	AX 9 17		9	17	2.3	10.3	14.9	4.05	9.50	19000	0.002
		AX 3.5 9 17	9	17	3.5	10.3	14.9	4.05	9.50	19000	0.004
10	AX 10 22		10	22	2.8	12.0	18.6	5.00	10.90	15500	0.004
		AX 4 10 22	10	22	4.0	12.0	18.6	5.00	10.90	15500	0.007
12	AX 12 26		12	26	2.8	15.0	22.6	6.90	17.70	13000	0.006
		AX 4 12 26	12	26	4.0	15.0	22.6	6.90	17.70	13000	0.010
13	AX 13 26		13	26	2.8	15.0	22.6	6.90	17.70	13000	0.006
		AX 4 13 26	13	26	4.0	15.0	22.6	6.90	17.70	13000	0.010
15	AX 15 28		15	28	2.8	17.0	24.6	7.40	20.00	11500	0.007
		AX 4 15 28	15	28	4.0	17.0	24.6	7.40	20.00	11500	0.009
17	AX 17 30		17	30	2.8	19.0	26.6	7.80	22.00	10500	0.008
		AX 4 17 30	17	30	4.0	19.0	26.6	7.80	22.00	10500	0.010
19	AX 19 32		19	32	2.8	21.0	28.6	8.00	23.30	10000	0.009
		AX 4 19 32	19	32	4.0	21.0	28.6	8.00	23.30	10000	0.013
20	AX 20 35		20	35	2.8	22.0	31.6	11.80	39.00	9000	0.010
		AX 5 20 35	20	35	5.0	22.0	31.6	11.80	39.00	9000	0.018
25	AX 25 42		25	42	2.8	27.7	37.4	13.30	49.00	7500	0.012
		AX 5 25 42	25	42	5.0	27.7	37.4	13.30	49.00	7500	0.025
27	AX 27 44		27	44	2.8	30.0	39.6	13.70	52.00	7200	0.012
30	AX 30 47		30	47	2.8	32.7	42.4	14.50	57.00	6500	0.014
		AX 5 30 47	30	47	5.0	32.7	42.4	14.50	57.00	6500	0.029
35	AX 35 52		35	52	2.8	37.2	49.0	18.90	84.00	5500	0.019
		AX 5 35 52	35	52	5.0	37.2	49.0	18.90	84.00	5500	0.035
	AX 35 53		35	53	2.8	37.2	49.0	18.90	84.00	5500	0.019
		AX 5 35 53	35	53	5.0	37.2	49.0	18.90	84.00	5500	0.036

NEEDLE THRUST PLATES
CP THIN AND THICK SERIES

7.3

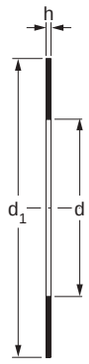

CP dünne Baureihe

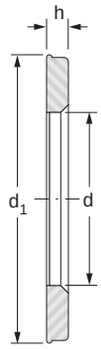

CP dicke Baureihe

Shaft ∅ mm	Designation		d mm	d_1 mm	h mm	Weight kg	Thrust bearings	
	CP thin series	CP thick series					AX thin series	AX thick serie
5	CP 5 13		5	12.4	0.8	0.001	AX 5 13	
		CP 2 5 13	5	12.4	2.0	0.002		AX 3.5 5 13
6	CP 6 14		6	13.4	0.8	0.001	AX 6 14	
		CP 2 6 14	6	13.4	2.0	0.002		AX 3.5 6 14
7	CP 7 15		7	14.4	0.8	0.001	AX 7 15	
		CP 2 7 15	7	14.4	2.0	0.002		AX 3.5 7 15
8	CP 8 16		8	15.4	0.8	0.001	AX 8 16	
		CP 2 8 16	8	15.4	2.0	0.002		AX 3.5 8 16
9	CP 9 17		9	16.4	0.8	0.001	AX 9 17	
		CP 2 9 17	9	16.4	2.0	0.002		AX 3.5 9 17
10	CP 10 22		10	21.5	0.8	0.002	AX 10 22	
		CP 2 10 22	10	21.5	2.0	0.002		AX 4 10 22
12	CP 12 26		12	25.5	0.8	0.003	AX 12 26	
		CP 2 12 26	12	25.5	2.0	0.006		AX 4 12 26
13	CP 13 26		13	25.5	0.8	0.002	AX 13 26	
		CP 2 13 26	13	25.5	2.0	0.006		AX 4 13 26
15	CP 15 28		15	27.5	0.8	0.003	AX 15 28	
		CP 2 15 28	15	27.5	2.0	0.006		AX 4 15 28
17	CP 17 30		17	29.5	0.8	0.003	AX 17 30	
		CP 2 17 30	17	29.5	2.0	0.007		AX 4 17 30
19	CP 19 32		19	31.5	0.8	0.004	AX 19 32	
		CP 2 19 32	19	31.5	2.0	0.009		AX 4 19 32
20	CP 20 35		20	34.5	0.8	0.004	AX 20 35	
		CP 3 20 35	20	34.5	3.0	0.013		AX 5 20 35
25	CP 25 42		25	41.5	0.8	0.005	AX 25 42	
		CP 3 25 42	25	41.5	3.0	0.019		AX 5 25 42
27	CP 27 44		27	43.7	0.8	0.006	AX 27 44	
30	CP 30 47		30	46.5	0.8	0.006	AX 30 47	
		CP 3 30 47	30	46.5	3.0	0.022		AX 5 30 47
35	CP 35 52		35	51.5	0.8	0.007	AX 35 52	
		CP 3 35 52	35	51.5	3.0	0.026		AX 5 35 52
	CP 35 53		35	52.5	0.8	0.007	AX 35 53	
		CP 3 35 53	35	52.5	3.0	0.027		AX 5 35 53

NEEDLE THRUST BEARINGS
AX THIN AND THICK SERIES

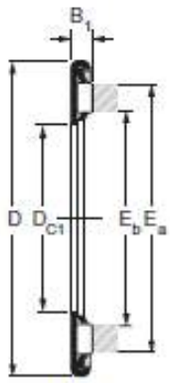

AX thin

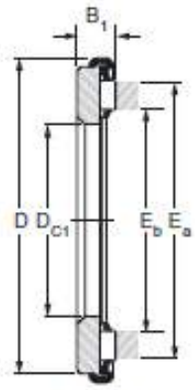

AX thick

Shaft ∅ mm	Designation		DC_1 mm	D mm	B_1 mm	E_b mm	E_a mm	Load ratings		Speed rating oil min^{-1}	Weight kg
	AX thin series	AX thick series						Dyn. C kN	Stat. Co kN		
40	AX 40 60		40	60	2.8	43.0	54.9	20.40	96.00	5000	0.024
		AX 5 40 60	40	60	5.0	43.0	54.9	20.40	96.00	5000	0.046
45	AX 45 65		45	65	2.8	48.0	59.9	21.80	109	4500	0.025
		AX 5 45 65	45	65	5.0	48.0	59.9	21.80	109	4500	0.050
50	AX 50 70		50	70	2.8	53.3	65.7	22.50	118	4000	0.026
		AX 5 50 70	50	70	5.0	53.3	65.7	22.50	118	4000	0.055
55	AX 55 78		55	78	2.8	58.4	72.5	28.50	164	3800	0.034
		AX 6 55 78	55	78	6.0	58.4	72.5	28.50	164	3800	0.089
60	AX 60 85		60	85	2.8	63.5	79.2	31.50	193	3500	0.040
		AX 6 60 85	60	85	6.0	63.5	79.2	31.50	193	3500	0.106
65	AX 3.5 65 90		65	90	3.5	68.5	84.2	33.50	210	3200	0.059
		AX 6 65 90	65	90	6.0	68.5	84.2	33.50	210	3200	0.114
70	AX 3.5 70 95		70	95	3.5	73.5	89.2	34.50	223	3000	0.061
		AX 6 70 95	70	95	6.0	73.5	89.2	34.50	223	3000	0.120
75	AX 3.5 75 100		75	100	3.5	78.5	94.2	36.00	240	2900	0.065
		AX 6 75 100	75	100	6.0	78.5	94.2	36.00	240	2900	0.127
80	AX 3.5 80 105		80	105	3.5	83.5	99.2	36.50	253	2700	0.069
		AX 6 80 105	80	105	6.0	83.5	99.2	36.50	253	2700	0.134
85	AX 3.5 85 110		85	110	3.5	88.5	104.2	38.00	270	2600	0.078
		AX 6 85 110	85	110	6.0	88.5	104.2	38.00	270	2600	0.142
90	AX 4.5 90 120		90	120	4.5	94.2	112.9	59.00	360	2400	0.117
		AX 8 90 120	90	120	8.0	94.2	112.9	59.00	360	2400	0.238
100	AX 4.5 100 135		100	135	4.5	104.2	127.3	73.00	490	2100	0.155
		AX 9 100 135	100	135	9.0	104.2	127.3	73.00	490	2100	0.364
110	AX 4.5 110 145		110	145	4.5	114.2	137.3	77.00	550	2000	0.168
		AX 9 110 145	110	145	9.0	114.2	137.3	77.00	550	2000	0.393
120	AX 4.5 120 155		120	155	4.5	124.2	147.3	80.00	590	1800	0.182
		AX 9 120 155	120	155	9.0	124.2	147.3	80.00	590	1800	0.424

NEEDLE THRUST PLATES
CP THIN AND THICK SERIES

7.3

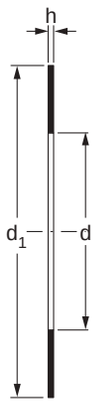

CP dünne Baureihe

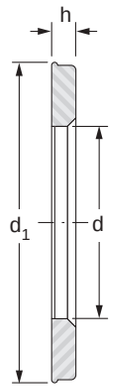

CP dicke Baureihe

Shaft ∅ mm	Designation		d mm	d_1 mm	h mm	Weight kg	Thrust bearings	
	CP thin series	CP thick series					AX thin series	AX thick serie
40	CP 40 60		40	59.5	0.8	0.009	AX 40 60	
		CP 3 40 60	40	59.5	3.0	0.034		AX 5 40 60
45	CP 45 65		45	64.4	0.8	0.010	AX 45 65	
		CP 3 45 65	45	64.4	3.0	0.037		AX 5 45 65
50	CP 50 70		50	69.4	0.8	0.011	AX 50 70	
		CP 3 50 70	50	69.4	3.0	0.040		AX 5 50 70
55	CP 55 78		55	77.4	0.8	0.014	AX 55 78	
		CP 4 55 78	55	77.4	4.0	0.069		AX 6 55 78
60	CP 60 85		60	84.3	0.8	0.017	AX 60 85	
		CP 4 60 85	60	84.3	4.0	0.083		AX 6 60 85
65	CP 1.5 65 90		65	89.3	1.5	0.033	AX 3.5 65 90	
		CP 4 65 90	65	89.3	4.0	0.088		AX 6 65 90
70	CP 1.5 70 95		70	94.3	1.5	0.034	AX 3.5 70 95	
		CP 4 70 95	70	94.3	4.0	0.093		AX 6 70 95
75	CP 1.5 75 100		75	99.3	1.5	0.037	AX 3.5 75 100	
		CP 4 75 100	75	99.3	4.0	0.099		AX 6 75 100
80	CP 1.5 80 105		80	104.3	1.5	0.039	AX 3.5 80 105	
		CP 4 80 105	80	104.3	4.0	0.104		AX 6 80 105
85	CP 1.5 85 110		85	109.3	1.5	0.047	AX 3.5 85 110	
		CP 4 85 110	85	109.3	4.0	0.111		AX 6 85 110
90	CP 1.5 90 120		90	118.8	1.5	0.052	AX 4.5 90 120	
		CP 5 90 120	90	118.8	5.0	0.173		AX 8 90 120
100	CP 1.5 100 135		100	133.8	1.5	0.068	AX 4.5 100 135	
		CP 6 100 135	100	133.8	6.0	0.277		AX 9 100 135
110	CP 1.5 110 145		110	143.8	1.5	0.075	AX 4.5 110 145	
		CP 6 110 145	110	143.8	6.0	0.300		AX 9 110 145
120	CP 1.5 120 155		120	153.8	1.5	0.081	AX 4.5 120 155	
		CP 6 120 155	120	153.8	6.0	0.323		AX 9 120 155

NEEDLE THRUST BEARINGS
AX THIN AND THICK SERIES

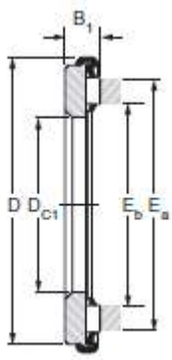

AX thick

Shaft ∅ mm	Designation	D_{C1} mm	D mm	B_1 mm	Eb mm	Ea mm	Load ratings		Speed rating oil min-1	Weight kg
	AX thick series						Dyn. C kN	Stat. Co kN		
130	AX 11 130 170	130	170	11	135	161	106	710	1700	0.660
140	AX 11 140 180	140	180	11	145	171	111	770	1600	0.670
150	AX 11 150 190	150	190	11	155	181	115	830	1500	0.710
160	AX 11 160 200	160	200	11	165	191	118	870	1400	0.760
170	AX 12 170 215	170	215	12	175	207	165	1160	1300	1.000
180	AX 12 180 225	180	225	12	185	217	173	1250	1200	1.050
190	AX 14 190 240	190	240	14	196	232	230	1650	1200	1.400
200	AX 14 200 250	200	250	14	206	242	239	1730	1100	1.500
220	AX 14 220 270	220	270	14	226	262	248	1850	1000	1.600
240	AX 15 240 300	240	300	15	246	286	280	2240	900	2.300

NEEDLE THRUST PLATES
CP THIN AND THICK SERIES

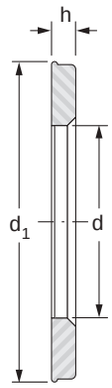

CP dicke Baureihe

Shaft ∅ mm	Designation	d mm	d_1 mm	h mm	Weight kg	Thrust bearings
	CP thick series					AX thick serie
130	CP 7 130 170	130	168.7	7.0	0.480	AX 11 130 170
140	CP 7 140 180	140	178.7	7.0	0.500	AX 11 140 180
150	CP 7 150 190	150	188.7	7.0	0.530	AX 11 150 190
160	CP 7 160 200	160	198.7	7.0	0.560	AX 11 160 200
170	CP 7 170 215	170	213.5	7.0	0.700	AX 12 170 215
180	CP 7 180 225	180	223.5	7.0	0.735	AX 12 180 225
190	CP 8 190 240	190	238.3	8.0	0.950	AX 14 190 240
200	CP 8 200 250	200	248.3	8.0	1.000	AX 14 200 250
220	CP 8 220 270	220	268.3	8.0	1.100	AX 14 220 270
240	CP 9 240 300	240	298.5	9.0	1.600	AX 15 240 300

ROLLER AND NEEDLE THRUST BEARINGS WITH THRUST PLATE

AXZ AND ARZ LIGHT SERIES

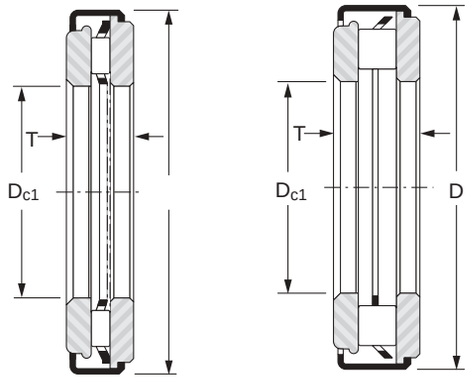

AXZ **ARZ**

Shaft ∅ mm	Designation		d mm	D mm	T mm	Load ratings		Speed rating oil min^{-1}	Weight kg
	AXZ	ARZ light series				Dyn. C kN	Stat. Co kN		
5	AXZ 5.5 5 13		5	13	5.5	3.00	5.70	25000	0.004
6	AXZ 5.5 6 14		6	14	5.5	3.15	6.35	22000	0.004
7	AXZ 5.5 7 15		7	15	5.5	3.55	7.60	22000	0.005
8	AXZ 5.5 8 16		8	16	5.5	3.70	8.30	22000	0.005
9	AXZ 5.5 9 17		9	17	5.5	4.05	9.50	19000	0.005
10	AXZ 6 10 22.4		10	22,4	6	5.00	10.9	15500	0.011
		ARZ 6.5 10 22.4	10	22,4	6.5	8.20	17.9	15500	0.012
12	AXZ 6 12 26.4		12	26,4	6	6.90	17.7	13000	0.017
		ARZ 7 12 26.4	12	26,4	7	12.7	29.5	13000	0.017
15	AXZ 6 15 28.4		15	28,4	6	7.40	20.0	11500	0.016
		ARZ 7 15 28.4	15	28,4	7	14.0	34.0	11500	0.019
17	AXZ 6 17 30.4		17	30,4	6	7.80	22.0	10500	0.018
		ARZ 7 17 30.4	17	30,4	7	15.0	39.0	10500	0.022
20	AXZ 8 20 35.4		20	35,4	8	11.80	39.0	9000	0.033
		ARZ 10 20 35.4	20	35,4	10	22.0	54.0	9000	0.038
25	AXZ 8 25 43		25	43	8	13.30	49.0	7500	0.047
		ARZ 10 30 43	25	43	10	25.5	70.0	7500	0.057
30	AXZ 8 30 48		30	48	8	14.50	57.0	6500	0.054
		ARZ 10 30 48	30	48	10	26.5	77.0	6500	0.065
35	AXZ 8 35 54		35	54	8	18.90	84.0	5500	0.066
		ARZ 11 35 54	35	54	11	33.8	94.0	5500	0.087

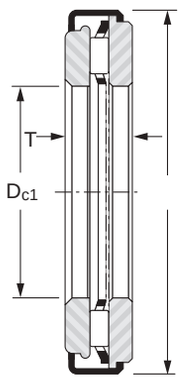

AXZ

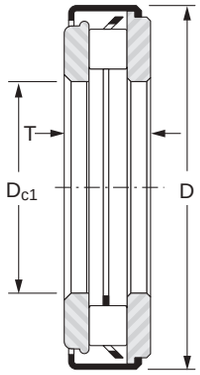

ARZ

Shaft ∅ mm	Designation		d mm	D mm	T mm	Load ratings		Speed rating oil min^{-1}	Weight kg
	AXN	ARZ light series				Dyn. C kN	Stat. Co kN		
40	AXZ 8 40 61		40	61	8	20.40	96.0	5000	0.084
		ARZ 12 40 61	40	61	12	46.0	129	5000	0.114
45	AXZ 8 45 66		45	66	8	21.80	109	4500	0.092
		ARZ 12 45 66	45	66	12	49.0	143	4500	0.126
50	AXZ 8 50 71		50	71	8	22.50	118	4000	0.100
		ARZ 12 50 71	50	71	12	51.0	157	4000	0.137
60	AXZ 10 60 86		60	86	10	31.50	193	3500	0.194
		ARZ 14 60 86	60	86	14	71.0	255	3500	0.246
70	AXZ 10 70 96		70	96	10	34.50	223	3000	0.220
		ARZ 14 70 96	70	96	14	77.0	295	3000	0.279
80	AXZ 10 80 106		80	106	10	36.50	253	2700	0.256
		ARZ 14 80 106	80	106	14	82.0	330	2700	0.312

COMBINED BEARINGS

8

PAGE 142 8.1 TECHNICAL FEATURES

PAGE 146 8.2 METHODS OF INSTALLATION

PAGE 148 8.3 COMBINED BEARINGS

PAGE 150 8.4 COMBINED BEARINGS WITH INCORPORATE THRUST PLATE

PAGE 154 8.5 THRUST PLATES FOR STANDARD COMBINED BEARINGS

PAGE 155 8.6 INNER RING FOR STANDARD COMBINED BEARINGS

TYPES OF COMBINED BEARINGS
TECHNICAL SPECIFICATIONS

Nadella combined needle bearings type **RAX** and derivatives are designed to support simultaneously both a radial and an axial load. They comprise a needle thrust bearing (or roller thrust bearing) and needle cage retained in a common outer ring.
The technical characteristics of the thrust bearing and the needle cage are set out in the appropriate sections.
These bearings form one integral unit permitting easy storage, handling and fitting. Their high radial and axial load capacities and small space requirement enable cost effective solutions to be achieved.
Calculations for combined bearings are carried out taking the axial component and the radial component separately without transforming the axial load into an equivalent radial load.

The independent operation of the thrust bearing and the needle cage precludes any interaction harmful to precise axial and radial rotation.
Axial expansion of the shaft, for example, will have no effect on the accuracy of the radial component.
Bearings can be used without inner rings or thrust plates, if the shaft journals, that serving as raceways, are of sufficient hardness and possess a suitable surface finish.
Hardness of 58-64 HRC will ensure that the full capacity of these bearings is achieved.
Lower hardness result in reduced static and dynamic capacities (both axial and radial), as indicated in dimensional tables (see Technical Section).

TYPES OF BEARINGS
Standard combined bearings

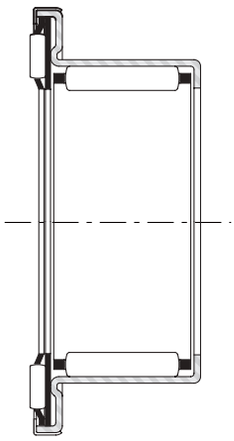

RAX700

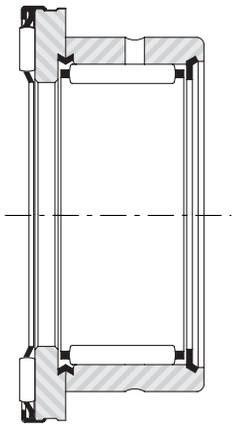

RAX400

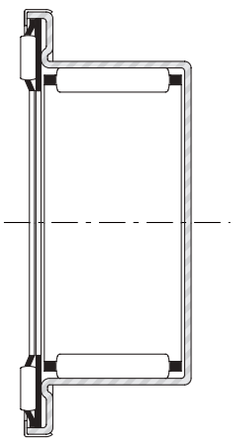

RAXF700

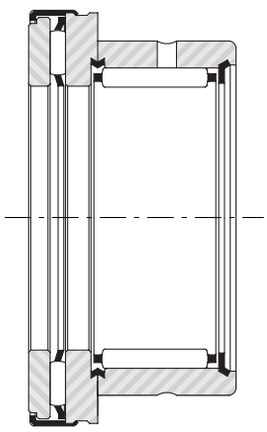

RAXPZ400

Combined bearings type RAX 700 and RAXF 700
Combined bearings type **RAX 700** possess a onepiece outer ring formed from thin sheet steel accurately controlled and hardened by suitable heat treatment.
The shape of this outer ring prevents weakness in the area between the axial component and the radial component, even after the latter has been tightly fitted into a housing.
This type of combined bearing is inexpensive and occupies little space, thus providing a very economical solution.
Because they are easy to use and can be fitted rapidly, they are often employed in preference to an arrangement with two separate needle bearings.
Closed-end combined bearings type **RAXF 700** ensure perfect sealing at the end of a shaft and do not require the use of blind housings or end caps.

Combined bearings type RAX 400
Combined needle bearings type **RAX 400** comprise a thrust plate and an outer ring machined separately and joined by a strong metal insert.
This arrangement prevents localised stresses and weakness in the area between the two components, thus eliminating the risk of damage during mounting or operation.
Although combined bearings type **RAX 700** should be considered first on grounds of economy, combined bearings with thick outer ring type **RAX 400** should be used when operating conditions require higher limit loads or greater rotational accuracy.
Moreover, they can be supplied in machine-tool quality type **RAXN**.

Standard combined bearings type RAXPZ 400
These bearings have an incorporated thrust plate retained by a steel ring set on the thrust plate. They are better protected against the introduction of dust and metal particles and are therefore recommended for spindles of drilling machines.

	With needle thrust bearing			
	Thin outer ring		Thick outer ring	
	Open	Closedend	Without retained thrust plate	With retained thrust plate
Bearings	RAX 700	RAXF 700	RAX 400	RAXPZ 400
Separate thrust plates	CP thick or thin		CP thick or thin	-
Inner rings (1)	JR	JR	JR	JR

TOLERANCES OF COMBINED BEARINGS
Combined bearings types RAX 700 and RAXF 700
Types RAX 700 and RAXF 700 have an outer ring formed from thin sheet steel, the radial component of these bearings can only be inspected using a ring-gauge having sufficient thickness to withstand deformation and with a bore ground with great accuracy.
The diameters of the ring-gauge and the "GO" and "NOGO" plug-gauges are identical to those given on page 58 in the inspection table for caged needle bushes type DL having identical inner and outer diameters.

Thickness tolerance of the axial component C1: ± 0,1 mm

Standard combined bearings type RAX 400 and derivatives

- *Radial component*

Diameter under the needles Fw: tolerance F6 (ISO Standard 1206).
Outer diameter D
Out-of-roundness
Inner rings JR

Normal tolerance class according to ISO Standard 1206 (see table on page 219).

- *Axal component*

Thickness C1: + 0,05/ - 0,06 mm
Axial run-out max: 0,01 mm

Tolerance	Thin thrust plates		Thick thrust plates mm
	Intermal d ≤ 60 mm	Intermal d > 60 mm	
Thickness	h ± 0,030 (1)	h ± 0,050 (2)	h ± 0,050
Max axial run-out	0,020 (1)	0,025 (2)	0,005

(1) Under minimum load of 150 N - (2) Under minimum load of 250 N

TYPES OF COMBINED BEARINGS
TECHNICAL SPECIFICATIONS

RADIAL PLAY

Combined bearings types RAX 700, RAXF 700

The fit of a combined bearing with thin outer ring in the housing determines, to a large extent, the dimension under the needles and consequently the radial play during operation.
The recommended shaft and housing tolerances give a radial play whose limits are suitable tor most normal applications. To obtain a closer clearance, it is possible to match the shaft diameters with the diameters under the needles of the bearings, after the latter have been fitted into their housings.
The possible differences in the stiffness of housings and the variations of clamping force resulting from the tolerance build up do not permit to establish a range of dimensions under the needles for every application.
However, for housings of very thick steel, taking into account the probable restraining force, the variations of the dimensions under the needles after installation will be within the tolerances given below:

+ 15/ + 50 µm up to Fw 20 mm
+ 20/ + 60 µm up to Fw = 25 a Fw = 40 mm
+ 20/ + 65 µm up to Fw = 45 mm

The limits of radial play should also take into account the tolerance of the shaft used directly as a raceway or of the outer diameter of the inner ring after it has been fitted on to the shaft.
Where an inner ring is used on a shaft of recommended tolerance k5 (or m5), the minimum play may be slightly lower and the maximum play slightly higher than for the case of an assembly without inner ring on a shaft with tolerance h5.

Combined bearings type RAX 400 and derivatives

Bearings without inner ring

The radial play of these bearings when used without inner rings is the difference between the diameter under the needles, which is kept within tolerance F6, and the diameter of the shaft which is machined to the recommended tolerances.
This type of combined bearing without inner ring can be supplied having a diameter under the needles selected in the lower half of tolerance F6 (suffix **TB**) or in the upper half (suffix **TC**) according to the table below.

Nominal dimension F_w mm		Tolerance of diameter under the needles		
		Normal F6 µm	TB µm	TC µm
above	to			
da 6	a 10	+13/+22	+13/+18	+ 17/+22
da 10	a 18	+16/+27	+16/+22	+21/+27
da 18	a 30	+20/+33	+20/+27	+26/+33
da 30	a 50	+25/+41	+25/+33	+33/+41
da 50	a 80	+30/+49	+30/+40	+39/+49

Bearings with inner ring

The radial play prior to installation of standard combined bearings with inner ring is in conformance with the normal group of ISO Standard 5753. The closely controlled play provided by this standard can be provided on request.

SHAFT AND HOUSING TOLERANCES

Combined bearings	Shaft				Housing	
	Dimension d for bearings without inner ring		Dimension d for bearings with inner ring		Dimension D	
					Steel or cast-iron	Non-ferrous metal (1) or thin castings in steel
	Rotation	Oscillation	Rotation	Oscillation		
RAX, RAXF 700	h5 (h6)	j5 (j6)	k5 (k6)	m5 (m6)	H6 (H7)	M6 (M7)
RAX, RAXPZ, RAXZ series 400	h5	j5	k5	m5	K6	M6

1) If a housing of non - ferrous metal reaches temperatures considerably higher (or lower) than 20 ° C, account should be taken of the difference in expansion (or contraction) of the outer race of the bearing and suitable adjustments to the fits should be made. The cylindrical tolerance defined as the difference in radii of two coaxial cylinders (ISO Standard 1101) should normally be less than a quarter of the manufacturing tolerance. However, for high precision or high

SUPPORTING FACES- RACEWAYS

The bearing shoulder must be a flat surface at right angles to the housing axis, otherwise the axial precision will be compromised and and the smooth running characteristics of the thrust bearing will be reduced. Similarly, the shaft shoulder, on which the needles of the thrust bearing rotate or on which the thrust plate is supported, must be flat and square to the axis. The deviation from true parallelism between the two supporting faces must be no more than:

- 0.3 in 1000, corresponding to an angle of 1 minute, for a combined bearing with thrust plate.
- 0.45 in 1000, corresponding to an angle of 1'30", for a combined bearing without thrust plate.

In the case of an assembly where neither thrust plate nor inner ring is used, the shaft journal on which the needle rotate must have sufficient hardness, i.e. 58-64 HRC to ensure maximum load capacities are attained. the shaft shoulder is used directly as a raceway for the needles of the thrust bearing or, if it supports a thin thrust plate (thickness 0.8 or 1.5 mm), it must be rigid and continuous throughout the area of circulation of the needles bounded by dimensions E_b, and E_a.

A thick thrust plate can be supported on a smaller shaft shoulder or on one that is discontinuous (as in the case of splines), provided the deflection of the plate does not affect the smooth running or required accuracy of the thrust bearing. speed applications, it is advisable to restrict this tolerance to the one - eighth of the manufacturing tolerance.

INSTALLATION

The bearing must be correctly aligned with the housing. is wise to use a small press fitted with a mandrel having supporting face square to the axis and covering the whole area bounded by dimensions E_b, and E_a. This method prevents the thrust component from undergoing shock load which might damage the bearing. When **RAX** or **RAXF 700** bearings are placed in position during installation care must be taken to ensure that the force exerted by the press does not exceed the axial limit load shown in the table of dimensions. The fitting inner rings on shafts manufactured to the recommended tolerances is usually sufficient to render the use of retaining rings unnecessary. However, if it is necessary to employ a ring to support an adjacent pinion, this ring must have an outer diameter slightly smaller than dimension F_w to enable it to pass smoothly into the bearing when the shaft is introduced.

LUBRICATION

When the applied axial loads are relatively high, the use of oil as a lubrication method is allowed. Combined bearings with a dust cap may use oil lubrication, although their design makes them better suited for use with grease lubrication.
Combined bearings are typically shipped protected with a corrosion preventive compound that is not a lubricant.
The bearings may be used in oil or grease lubricated applications, with out removal of the corrosion-preventive compound. However, it may be advisable to remove the corrosion-preventive compound before
packing the bearings (with a suitable grease) to obtain optimum grease performance and to minimize the possibility of confusing grease bearings with bearings containing corrosion preventive.

LOAD RATINGS

Calculations for combined bearings are carried out taking the axial component and the radial component separately without transforming the axial load into an equivalent radial load.
For the meaning of the Load Ratings in the tables of combined bearings **RAX 400** and derivatives, see the Technical Section.
Combined bearings type **RAX700** and **RAXF700** has a limitation for the maximum axial permissible load, both axial and radial, because are made in thin outer ring.
Limit loads are in the table on page 148.

TYPICAL ARRANGEMENTS USING COMBINED DEARINGS

The special inner rings (series **19000** or **20600**) designed for machine - tool quality combined bearings are of sufficient width to permit centring of the thrust plate and thus eliminate the need for a shaft shoulder.

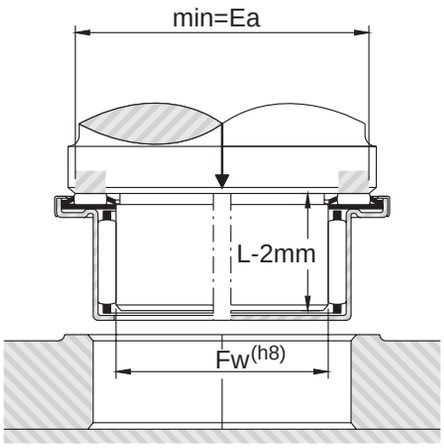

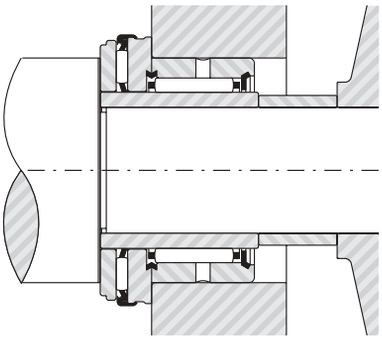

METHODS OF INSTALLATION

RAX AND RAXF 700

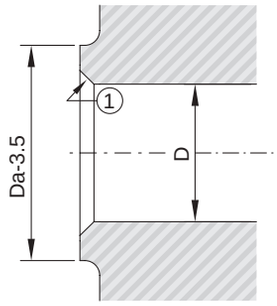

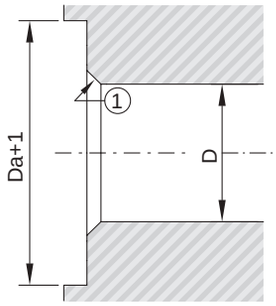

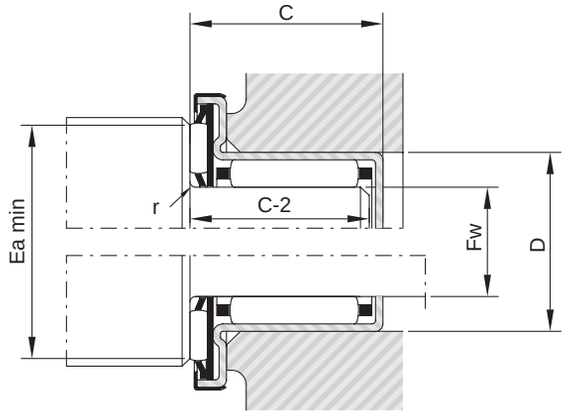

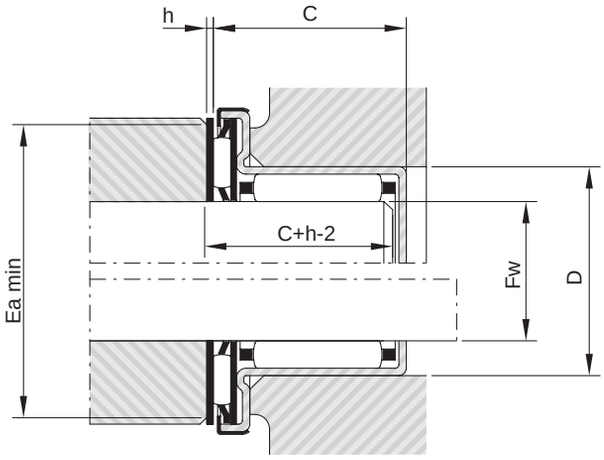

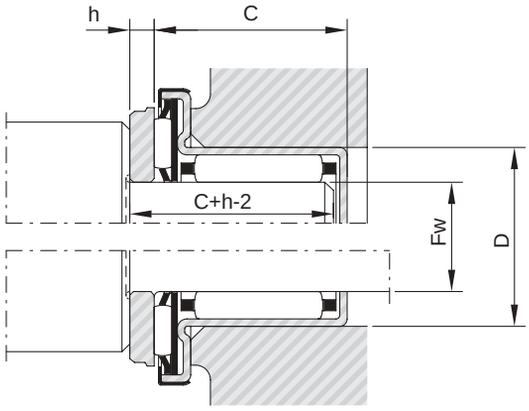

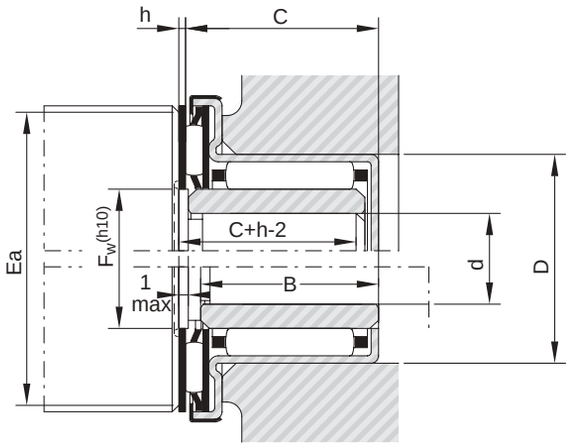

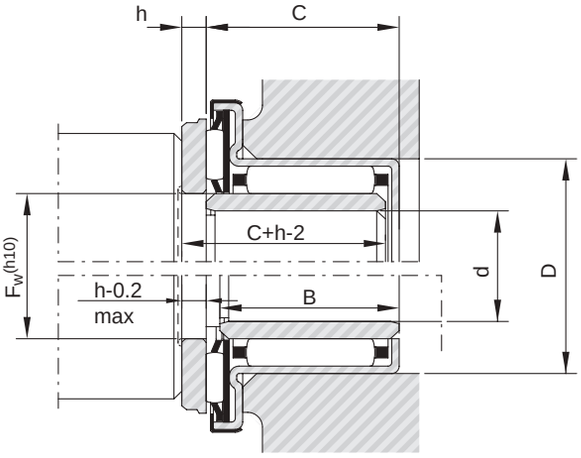

RAX 400, RAXPZ 400

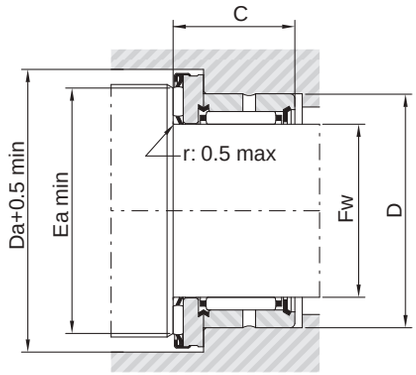

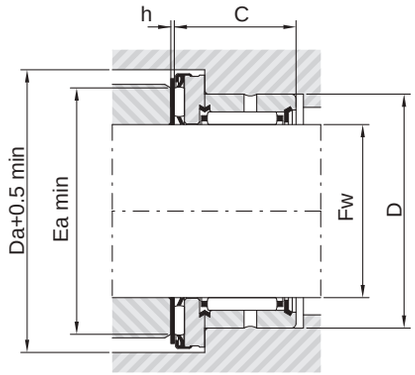

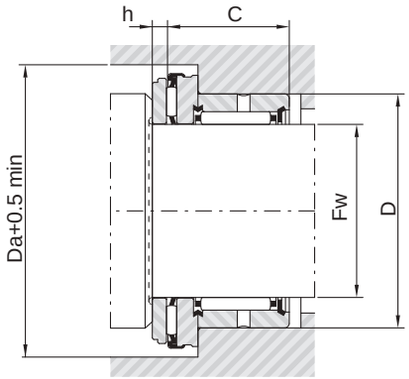

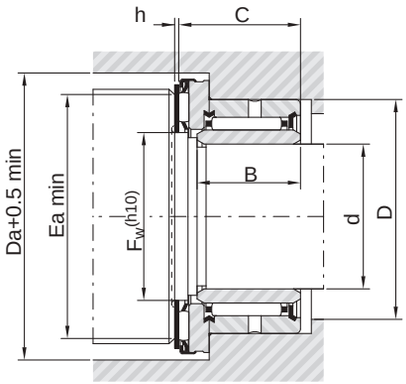

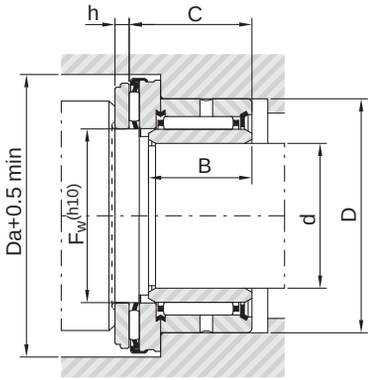

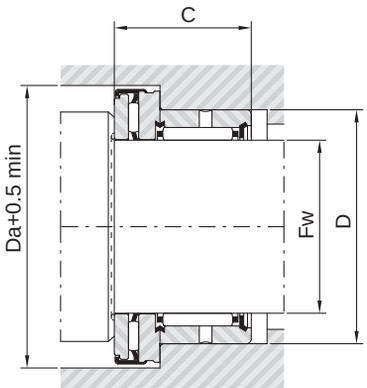

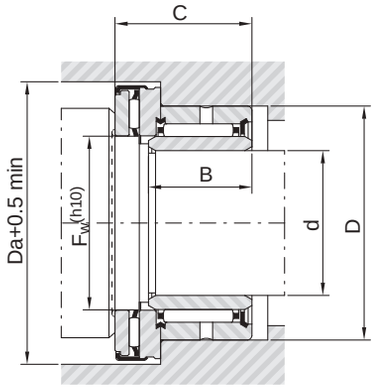

COMBINED BEARINGS
RAXF 700

- Open RAX 700 series
- Closed RAXF 700 series

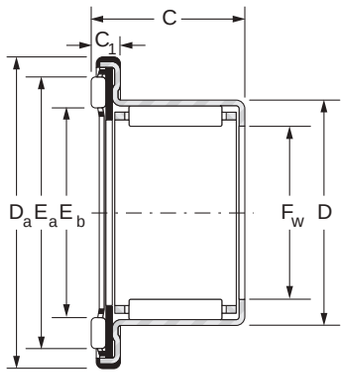

RAX 700

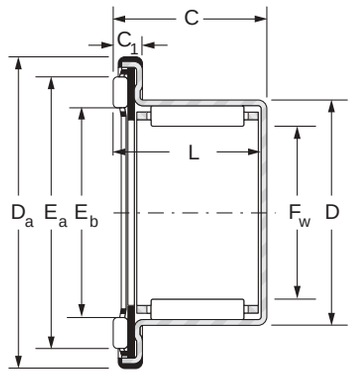

RAXF 700

Shaft ∅ mm	Designations		F_w mm	D mm	C mm	D_a mm	E_b mm	E_a mm	C_1 mm	L mm	Load ratings kN			
	RAX 700 series	RAXF 700 series									Radial		Axial	
											Dyn. C	Stat. Co	Dyn. C	Stat. Co
5	RAX 705	-	5	9	11	15.5	7.2	11.2	3.3	–	2.15	1.95	3.15	6.35
12	RAX 712	RAXF 712	12	18	14.2	27.5	15	22.6	4.2	13.2	6.30	7.20	6.90	17.7
14	RAX 714	RAXF 714	14	20	14.2	29.5	17	24.6	4.2	13.2	6.90	8.50	7.40	20.0
15	RAX 715	RAXF 715	15	21	14.2	31.5	19	26.6	4.2	13.2	7.40	9.30	7.80	22.0
18	RAX 718	RAXF 718	18	24	18.2	33.5	21	28.6	4.2	17.2	11.5	17.7	8.00	23.0
20	RAX 720	RAXF 720	20	26	18.2	36.5	22	31.6	4.2	17.2	12.2	19.5	11.8	39.0
25	RAX 725	RAXF 725	25	33	22.2	45.5	30	39.6	4.2	21.2	20.5	32.0	13.7	52.0
30	RAX 730	RAXF 730	30	38	22.2	50.5	35	44.7	4.2	21.2	22.3	37.5	14.9	60.0
35	RAX 735	-	35	43	22.2	56.5	39	50.9	4.2	21.2	24.5	45.0	19.4	88.0
40	RAX 740	RAXF 740	40	48	22.2	61.5	43	54.9	4.2	21.2	26.2	51.0	20.4	96.0
45	RAX 745	-	45	52	22.2	66.5	48	59.9	4.2	21.2	24.8	55.0	21.8	109

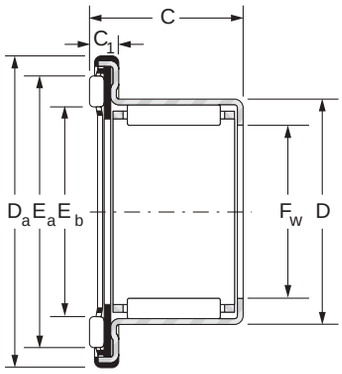

RAX 700

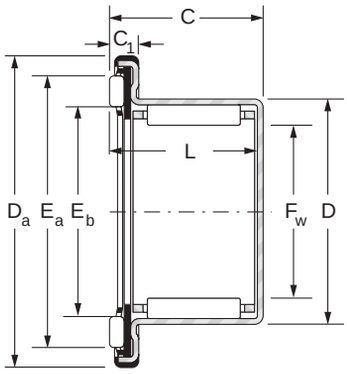

RAXF 700

Limit Loads kN		Speed rating min^{-1}	Weight		Inspection			Inner ring	Thrust plate		Shaft ∅ mm
Radial	Axial		RAX Kg	RAXF Kg	Housing ∅ mm	GO plug-gauges mm	NO-GO plug-gauges mm		Thin	Thick	
0.74	3.5	25000	0.005	-	9.000	5.009	5.036	-	-	-	5
2.5	11	13000	0.017	0.018	18.000	12.009	12.035	JR 8x12x12.5	CP 12 26	CP 2 12 26	12
2.9	12.5	11500	0.018	0.020	20.000	14.009	14.035	JR 10x14x12	CP 14 26	CP 2 14 26	14
3.1	14	10500	0.020	0.022	21.000	15.009	15.035	JR 12x15x12.5	CP 15 28	CP 2 15 28	15
5.8	16	10000	0.027	0.030	24.000	18.009	18.035	JR 15x18x16.5	CP 18 30	CP 2 18 30	18
6.4	18	9000	0.031	0.035	26.000	20.009	20.035	JR 15x20x16	CP 20 35	CP 3 20 35	20
10.5	22	7200	0.055	0.060	33.000	25.015	25.041	JR 20x25x20.5	CP 25 42	CP 3 25 42	25
12	25	6300	0.063	0.070	38.000	30.015	30.041	JR 25x30x20.5	CP 30 47	CP 3 30 47	30
14.3	27	5500	0.075	0.084	43.000	35.015	35.041	JR 30x35x20.5	CP 35 52	CP 3 35 52	35
16	30	5000	0.086	0.096	48.000	40.015	40.041	JR 35x40x20.5	CP 40 60	CP 3 40 60	40
17	32	4500	0.088	0.099	52.000	45.015	45.041	JR 40x45x20.5	CP 45 65	CP 3 45 65	45

COMBINED BEARINGS WITH INCORPORATE THRUST PLATE
RAX 400

Machine-tool quality
combined bearings

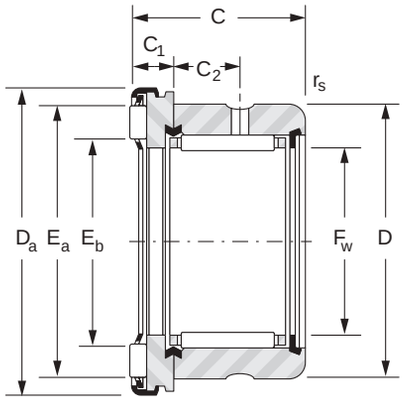

RAX 400

Shaft ∅ mm	Designations RAX 400 series	F_w mm	C mm	D mm	D_a mm	E_b mm	E_a mm	C_1 mm	C_2 mm	$r_{s\ min}$ mm
10	RAX 410	10	19	19	22	12	18.6	5	6	0.35
12	RAX 412	12	19	21	26	15	22.6	5	6	0.35
15	RAX 415	15	19	24	28	17	24.6	5	6	0.35
17	RAX 417	17	21	26	30	19	26.6	5	6	0.65
20	RAX 420	20	24	30	35	22	31.6	6	9	0.85
25	RAX 425	25	24	37	42	27.7	37.4	6	9	0.85
30	RAX430	30	24	42	47	32.7	42.4	6	9	0.85
35	RAX 435	35	24	47	53	37.2	49	6	9	0.85
40	RAX 440	40	24	52	60	43	54.9	6	9	0.85
45	RAX 445	45	24	58	65	48	59.9	6	9	0.85
50	RAX 450	50	27	62	70	53.3	65.7	6	11	1.3
60	RAX 460	60	28	72	85	63.5	79.2	7	11	1.3
70	RAX 470	70	28	85	95	73.5	89.2	7	11	1.3

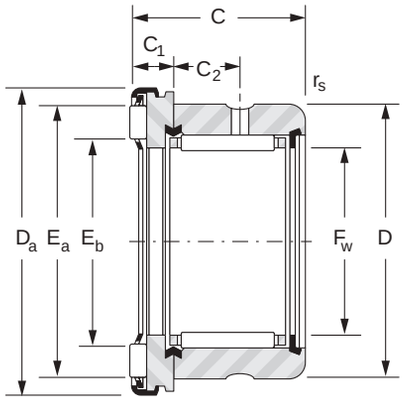

RAX 400

Load Ratings kN				Speed rating min-1)i	Weight kg	Inner Ring	Thrust Plate		Shaft ∅ mm
Radial		Axial							
Dyn. C	Stat. Co	Dyn. C	Stat. Co				Thin	Thick	
5.90	7.16	5.00	10.9	15500	0.025	JR 7x10x16	CP 10 22	CP 2 10 22	10
6.78	9.03	7.10	18.5	13000	0.032	JR 9x12x16	CP 12 26	CP 2 12 26	12
9.66	12.6	7.60	20.8	11500	0.034	JR 12x15x16	CP 15 28	CP 2 15 28	15
11.8	16.3	8.1	23	10500	0.041	JR 14x17x17	CP 17 30	CP 2 17 30	17
14.8	23.7	11.8	39	9000	0.066	JR 17x20x20	CP 20 35	CP 3 20 35	20
15.1	26.2	13.3	49	7500	0.099	JR 20x25x20	CP 25 42	CP 3 25 42	25
20.2	34.6	14.5	57	6.500	0.111	JR 25x30x20	CP 30 47	CP 3 30 47	30
22.1	40.8	18.9	84	5.500	0.130	JR 30x35x20	CP 35 52	CP 3 35 52	35
23.8	47.0	20.4	96	5.000	0.150	JR 35x40x20	CP 40 60	CP 3 40 60	40
24.9	51.8	21.8	109	4.500	0.179	JR 40x45x20	CP 45 65	CP 3 45 65	45
30.2	68.5	22.5	118	4.000	0.205	JR 45x50x25	CP 50 70	CP 3 50 70	50
31.9	78.1	31.5	193	3.500	0.282	JR 55x60x25	CP 60 85	CP 4 60 85	60
36.1	84.7	34.5	223	3.000	0.386	JR 60x70x25	CP 1.5 70 95	CP 4 70 95	70

COMBINED BEARINGS WITH INCORPORATE THRUST PLATE
RAXPZ 400

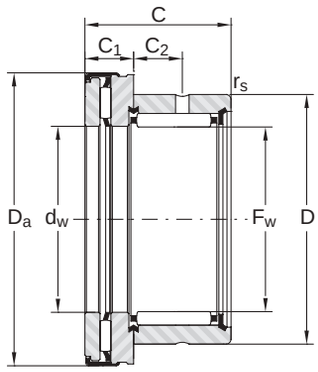

RAXPZ400

Shaft ∅ mm	Designations RAXPZ 400 series	F_w mm	D mm	C mm	d_a mm	D_a mm	C_1 mm	C_2 mm	$r_{s\ min}$ mm
10	RAXPZ 410	10	19	21	10	22.4	7	6	0.35
12	RAXPZ 412	12	21	21	12	26.4	7	6	0.35
15	RAXPZ 415	15	24	21	15	28.4	7	6	0.35
17	RAXPZ 417	17	26	23	17	30.4	7	8	0.65
20	RAXPZ 420	20	30	27	20	35.4	9	9	0.85
25	RAXPZ 425	25	37	27	25	43	9	9	0.85
30	RAXPZ 430	30	42	27	30	48	9	9	0.85
35	RAXPZ 435	35	71	27	35	54	9	9	0.85
40	RAXPZ 440	40	52	27	40	61	9	9	0.85
45	RAXPZ 445	45	58	27	45	66	9	9	0.85
50	RAXPZ 450	50	62	30	50	71	9	11	1.3
60	RAXPZ 460	60	72	32	60	86	11	11	1.3
70	RAXPZ 470	70	85	32	70	96	11	11	1.3

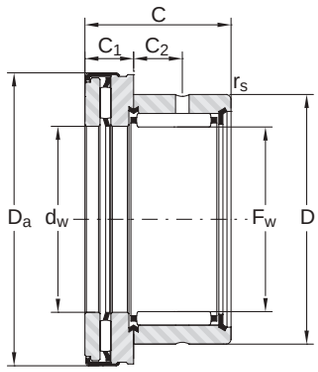

RAXPZ400

Load Ratings kN				Speed rating min-1	Weight kg	Shaft ∅ mm
Radial		Axial				
Dyn. C	Stat. Co	Dyn. C	Stat. Co			
5.90	7.16	5.00	10.9	15500	0.029	**10**
6.78	9.03	7.10	18.5	13000	0.038	**12**
9.66	12.6	7.60	20.8	11500	0.040	**15**
11.8	16.3	8.1	23	10500	0.048	**17**
14.8	23.7	11.8	39	9000	0.079	**20**
15.1	26.2	13.3	49	7500	0.118	**25**
20.2	34.6	14.5	57	6.500	0.133	**30**
22.1	40.8	18.9	84	5.500	0.157	**35**
23.8	47.0	20.4	96	5.000	0.184	**40**
24.9	51.8	21.8	109	4.500	0.216	**45**
30.2	68.5	22.5	118	4.000	0.245	**50**
31.9	78.1	31.5	193	3.500	0.365	**60**
36.1	84.7	34.5	223	3.000	0.479	**70**

THRUST PLATES FOR STANDARD COMBINED BEARINGS

8.5

CP thin and thick series

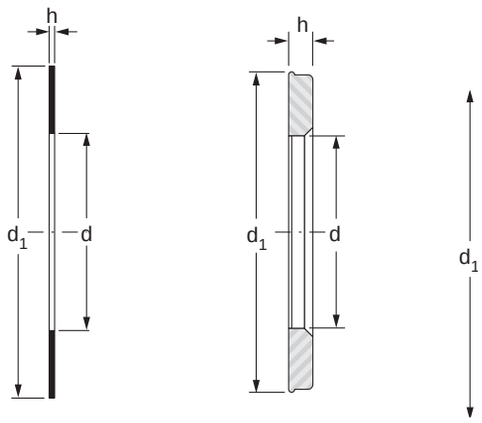

CP dünne Baureihe **CP dicke Baureihe**

Shaft ∅ mm	Designations		d mm	d_1 mm	h mm	Weight g	For combined bearings	
	CP Thin series	CF Thick series					RAX 700 RAXF 700	RAX 400
10	CP 10 22		10	21.5	0.8	1.7		RAX 410
		CP 2 10 22	10	21.5	2	4.3		
12	CP 12 26		12	25.5	0.8	2.5	RAX, RAXF 712	RAX 412
		CP 2 12 26	12	25.5	2	6.2		
14	CP 14 26		14	25.5	0.8	2.3	RAX, RAXF 714	
		CP 2 14 26	14	25.5	2	5.6		
15	CP 15 28		15	27.5	0.8	2.8	RAX, RAXF 715	RAX 415
		CP 2 15 28	15	27.5	2	6		
17	CP 17 30		17	29.5	0.8	2.5		RAX 417
		CP 2 17 30	17	29.5	2	7		
18	CP 18 30		18	29.5	0.8	2.3	RAX, RAXF 718	
		CP 2 18 30	18	29.5	2	5.7		
20	CP 20 35		20	34.5	0.8	3.8	RAX, RAXF 720	RAX 420
		CP 3 20 35	20	34.5	3	13		
25	CP 25 42		25	41.5	0.8	5.3	RAX, RAXF725	
		CP 3 25 42	25	41.5	3	19		
30	CP 30 47		30	46.5	0.8	6	RAX, RAXF 730	RAX 430
		CP 3 30 47	30	46.5	3	22		
35	CP 35 52		35	51.5	0.8	7	RAX, RAXF 735	RAX 435
		CP 3 35 52	35	51.5	3	26		
40	CP 40 60		40	59.5	0.8	9.3	RAX, RAXF 740	RAX 440
		CP 3 40 60	40	59.5	3	34		
45	CP 45 65		45	64.4	0.8	10	RAX, RAXF 745	RAX 445
		CP 3 45 65	45	64.4	3	37		
50	CP 50 70		50	69.4	0.8	11		RAX 450
		CP 3 50 70	50	69.4	3	40		
60	CP 60 85		60	84.3	0.8	17		RAX 460
		CP 4 60 85	60	84.3	4	83		
70	CP 1.5 70 95		70	94.3	1.5	32		RAX 470
		CP 4 70 95	70	94.3	4	93		

INNER RINGS FOR STANDARD COMBINED BEARINGS

8.6

JR standard series

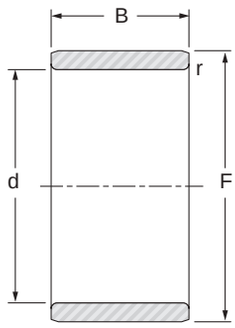

JR

Shaft ∅ mm	Designations		d mm	F mm	B mm	r mm	Weight g	For combined bearings	
	JR series	JR series						RAX 700 RAXF 700	RAX 400 RAXPZ 400
7		JR 7x10x16	7	10	16	0.2	4.8		RAX 410
8	JR 8x12x12.5		8	12	12.5	0.3	5.8	RAX 712	
9		JR 9x12x16	9	12	16	0.2	5.9		RAX 412
10	JR 10x14x12		10	14	12	0.3	7	RAX 714	
12	JR 12x15x12.5		12	15	12.5	0.2	5.8	RAX 715	
		JR 12x15x16	12	15	16	0.2	7.6		RAX 415
13	JR 15x18x16.5		13	18	16.5	0.35	15	RAX 718	
14		JR 14x17x17	14	17	17	0.2	9.3		RAX 417
15	JR 15x20 16		15	20	16	0.35	17	RAX 720	
		JR 17x20x20	15	20	20	0.35	20.5		RAX 420
20		JR 20x25x20	20	25	20	0.35	32		RAX 425
	JR 20x25x20.5		20	25	20.5	0.35	33	RAX 725	
25		JR 25x30x20	25	30	20	0.35	32		RAX 430
	JR 25x30x20.5		25	30	20.5	0.35	33	RAX 730	
30		JR 30x35x20	30	35	20	0.35	38		RAX 435
	JR 30x35x20.5		30	35	20.5	0.35	39	RAX 735	
35		JR 35x40x20	35	40	20	0.35	44		RAX 440
	JR 35x40x20.5		35	40	20.5	0.35	45	RAX 740	
40		JR 40x45x20	40	45	20	0.35	50		RAX 445
	JR 40x45x20.5		40	45	20.5	0.35	51	RAX 745	
45		JR 45x50x25	45	50	25	0.65	69		RAX 450
55		JR 55x60x25	55	60	25	0.65	84		RAX 460
60		JR 60x70x25	60	70	25	0.85	190		RAX 470

CYLINDRICAL INNER RINGS WITH HOLE FOR RNA BEARINGS

BI / BIC series

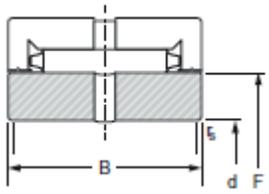

Shaft ∅	Designations	d mm	F mm	B mm	r_s min mm	Weight g
12	BIC 1012	12	17.6	15	1	0.016
15	BIC 1015	15	20.8	15	1	0.018
	BIC 2015	15	22.1	22	1	0.035
17	BIC 1017	17	23.9	15	1	0.026
20	BIC 1020	20	28.7	18	1	0.046
	BIC 2020	20	28.7	22	1	0.056
25	BIC 1025	25	33.5	18	1	0.054
	BIC 2025	25	33.5	22	1	0.065
	BIC 22025	25	33.5	30	1	0.500
30	BIC 1030	30	38.2	18	1	0.060
	BIC 2030	30	38.2	22	1	0.074
	BIC 3030	30	44.0	30	1	0.188
35	BIC 1035	35	44.0	18	1	0.077
	BIC 2035	35	44.0	22	1	0.093
40	BIC 1040	40	49.7	18	1.5	0.094
	BIC 2040	40	49.7	22	1.5	0.115
	BIC 3040	40	55.4	36	1.5	0.321
45	BIC 1045	45	55.4	18	1.5	0.113
	BIC 2045	45	55.4	22	1.5	0.139
	BIC 3045	45	62.1	38	1.5	0.422

BIC series

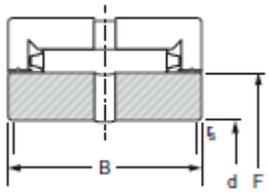

Shaft ∅	Designations	d mm	F mm	B mm	r_s min mm	Weight g
50	BIC 1050	50	62.1	20	2	0.163
	BIC 11050	50	62.1	24	2	0.196
	BIC 2050	50	62.1	28	2	0.228
	BIC 3050	50	68.8	38	2	0.515
55	BIC 1055	55	68.8	20	2	0.205
	BIC 3055	55	72.6	38	2	0.525
60	BIC 2060	60	72.6	28	2	0.282
	BIC 3060	60	78.3	38	2	0.583
65	BIC 3065	65	83.1	38	2	0.623
70	BIC 3070	70	88.0	38	2	0.662
75	BIC 2075	75	88.0	32	2	0.410
80	BIC 1080	80	96.0	24	2	0.410
	BIC 2080	80	96.0	32	2	0.545
	BIC 3080	80	99.5	38	2	0.805
90	BIC 2090	90	104.7	32	2	0.531
	BIC 3090	90	109.1	43	2	0.990
95	BIC 2095	95	109.1	32	2	0.548
	BIC 3095	95	114.7	43	2	1.075
100	BIC 3100	100	119.2	43	2	1.090
105	BIC 2105	105	119.2	32	2	0.615
110	BIC 2110	110	124.7	34	2	0.705
130	BIC 3130	130	158.0	52	2	2.530

SEALING RINGS

9

PAGE 158 9.1 TECHNICAL FEATURES

PAGE 159 9.2 SEAL RINGS

SEALING RINGS
TECHNICAL SPECIFICATIONS

9.1

Nadella sealing rings type **DH**, made in synthetic rubber and incorporating a metal insert, have the same inner and outer dimensions as Nadella needle bushes and the radial portion of the combined bearings type **RAX 700**. The recommended housing and shaft tolerances for these bearings ensure a tight fit of the sealing ring in the housing bore and the optimum friction between lip and shaft. The simple installation of this seal, requiring no special machining, provides a very economical seal within a minimum space.
In the case of grease lubrication, the seal should be installed with the lip facing away from the bearing (fig. 1) to enable expulsion of old grease when replenishing by means of a pump.
For oil lubrication, installation the opposite way is recommended (fig. 2). If the prevailing conditions are particularly dirty, it may be necessary to protect the seal additionally by means of a labyrinth.

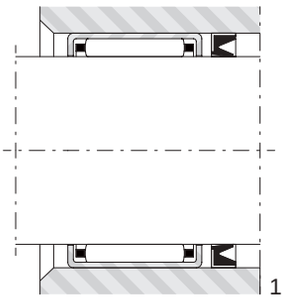
1

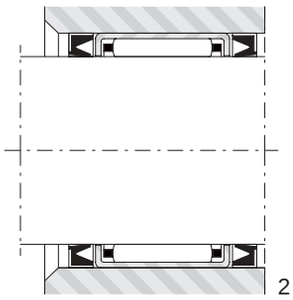
2

Sealing rings may also be used with needle cages having the same shaft and housing diameters (fig. 3) or with those having larger or smaller housing diameters than that of the seal (fig. 4 and fig. 5).
The hardness and surface finish required for the raceway on the shaft enable these sealing rings to operate at circumferential speeds of 10-12 m/s, providing lubrication is adequate.
Standard type **DH** sealing rings will operate satisfactorily at temperatures from -20°C to + 120°C. For conditions outside this temperature range, please consult Nadella Technical Department.

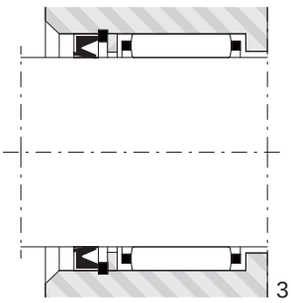
3

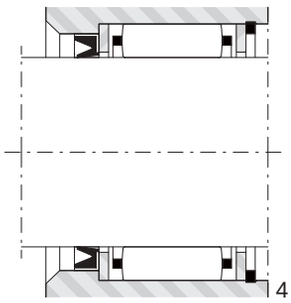
4

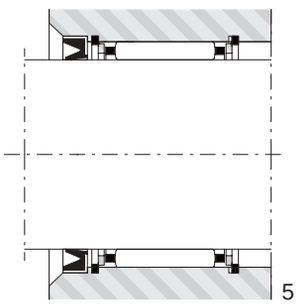
5

INSTALLATION
Type **DH** sealing rings should be smeared with grease before mounting- on the outside diameter to facilitate assembly and avoid damage and on the inside to prevent dry operation when starting from rest.
The edge of the housing bore should be chamfered to prevent damage to the seal and to facilitate assembly. A small press should be used for this purpose - such as that used to install needle bushes, in order to guide the sealing ring parallel to the axis of the housing bore.
The needle bush and the sealing ring must be installed separately in two distinct operations. The same mandrel (fig. 6) may be used for both operations: the seal installation being effected by limiting the mandrel stroke with a spacer (fig. 7).
In order to prevent the risk of damage to the seal lip, the shaft end must be chamfered.

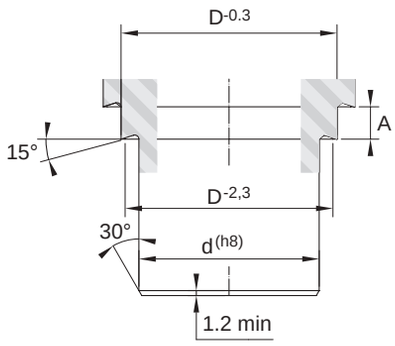

6

A=b+1.2 ÷ 1.4

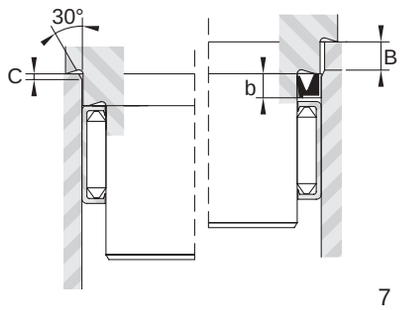

7

B=b+ (0.3 ÷ 0.5)
C=0.5 ÷ 0.7

SEALING RINGS

9.2

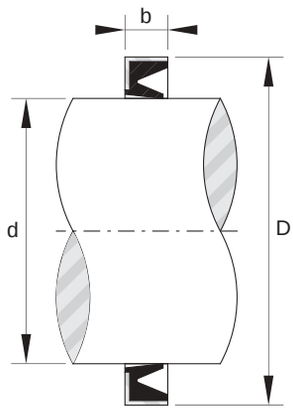

Shaft ∅ mm	Designation	d mm	D mm	b mm	Speed rating min-1	Weight g
5	DH 5x9x2	5	9	2	22500	0.21
6	DH 6x10x2	6	10	2	20000	0.3
	DH 6x12x2	6	12	2	20000	0.5
7	DH 7x11x2	7	11	2	15000	0.34
	DH 7x14x2	7	14	2	15000	0.55
8	DH 8x12x3	8	12	3	15000	0.55
	DH 8x15x3	8	15	3	15000	1.1
9	DH 9x13x3	9	13	3	12500	0.69
10	DH 10x14x3	10	14	3	12500	0.74
12	DH 12x16x3	12	16	3	10000	0.8
	DH 12x18x3	12	18	3	10000	1.29
	DH 12x19x3	12	19	3	10000	1.61
13	DH 13x19x3	13	19	3	10000	1.37
14	DH 14x18x2.5	14	18	2.5	9000	1.03
	DH 14x20x3	14	20	3	9000	1.4
	DH 14x22x3	14	22	3	9000	1.98
15	DH 15x21x3	15	21	3	9000	1.5
	DH 15x23x3	15	23	3	9000	1.54
16	DH 16x20x2.5	16	20	2.5	8500	1.22
	DH 16x22x3	16	22	3	8500	1.52
	DH 16x24x3	16	24	3	8500	1.56

SEALING RINGS

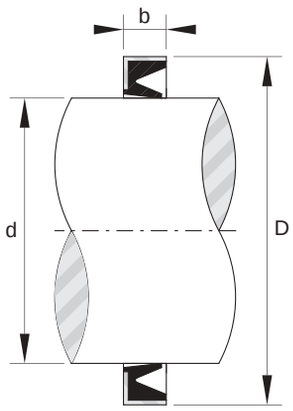

Shaft ∅ mm	Designation	d mm	D mm	b mm	Speed rating min^{-1}	Weight g
17	DH 17x23x3	17	23	3	8000	1.54
	DH 17x25x3	17	25	3	8000	1.61
18	DH 18x24x3	18	24	3	8000	1.55
	DH 18x26x4	18	26	4	8000	1.7
19	DH 19x27x4	19	27	4	7500	1.8
20	DH 20x24x2.5	20	24	2.5	7500	1.48
	DH 20x26x4	20	26	4	7500	1.59
	DH 20x28x4	20	28	4	7500	1.99
21	DH 21x29x4	21	29	4	7000	2.18
22	DH 22x26x2.5	22	26	2.5	7000	1.52
	DH 22x28x4	22	28	4	7000	1.65
	DH 22x30x4	22	30	4	7000	2.8
24	DH 24x32x4	24	32	4	6500	3.8
25	DH 25x31x2.5	25	31	2.5	6500	1.84
	DH 25x32x4	25	32	4	6500	2.15
	DH 25x33x4	25	33	4	6500	4.2
26	DH 26x34x4	26	34	4	6000	4.3
28	DH 28x35x4	28	35	4	6000	4
	DH 28x37x4	28	37	4	6000	4.64
29	DH 29x38x4	29	38	4	6000	4.95
30	DH 30x36x2.5	30	36	2.5	5500	2
	DH 30x37x4	30	37	4	5500	4.57
	DH 30x40x4	30	40	4	5500	5.15

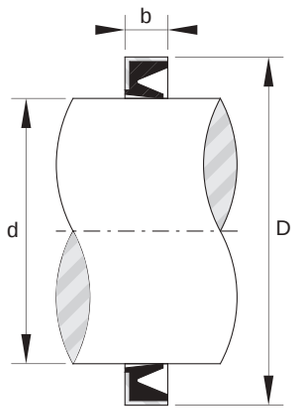

Shaft ∅ mm	Designation	d mm	D mm	b mm	Speed rating min^{-1}	Weight g
32	DH 32x42x4	32	42	4	5500	5.5
	DH 32x45x4	32	45	4	5500	6.15
35	DH 35x41x2.5	35	41	2.5	5000	2.16
	DH 35x42x4	35	42	4	5000	5.3
	DH 35x45x4	35	45	4	5000	5.65
37	DH 37x47x4	37	47	4	5000	7.5
38	DH 38x48x4	38	48	4	5000	7.6
40	DH 40x47x4	40	47	4	4700	6.2
	DH 40x50x4	40	50	4	4700	8.01
42	DH 42x49x5	42	49	5	4500	5
	DH 42x52x4	42	52	4	4500	8.4
45	DH 45x52x4	45	52	4	4500	6.7
	DH 45x55x4	45	55	4	4500	8.9
48	DH 48x55x3.5	48	55	3.5	4200	6.8
50	DH 50x58x4	50	58	4	4000	6.95
	DH 50x62x5	50	62	5	4000	10.9
52	DH 52x59x3.5	52	59	3.5	4000	7.1
58	DH 58x65x3.5	58	65	3.5	3700	7.8

NEEDLE ROLLERS

10

PAGE 164 10.1 TECHNICAL FEATURES

PAGE 166 10.2 NEEDLE ROLLERS WITH ROUNDED ENDS

PAGE 169 10.3 NEEDLE ROLLERS STANDARD

NEEDLE ROLLERS
TECHNICAL SPECIFICATIONS

In certain applications, the limited amount of space available for bearings and the loads to be supported require the use of a full complement of needles independent of any system of retention. The dimensions of the needle, diameter and length, are determined in relation to the load capacity required.
The needles are placed directly between shaft and housing without the use of inner or outer rings. Thus shaft of maximum diameter is permissible to increase rigidity and load capacity.
In rotating applications where the load capacity requires the use of needles that are long in relation to the shaft diameter, it is preferable to employ two rows of needles of equal length separated by a spacer ring. In such cases, the needles must be selected with diameters in the same tolerance class. This arrangement is particularly recommended for mounting parts such as long idler wheels, especially where they are subjected to rotational torque.

RACEWAYS
Maximum load capacity is obtained with hardened inner and outer raceways of surface hardness 58-64 HRC.
Parts used for the lateral retention of needles at their ends should be of equivalent hardness.
The inner and outer raceways should both be aligned on installation and before operation under load. In the case of parts fitted with a single row of needles, the inner raceway may be ground convex to allow misalignment.
A convexity permitting misalignment of 1 in 1000 (or up to 2 in 1000 in cases of instantaneous overloading) does not reduce the calculated load capacity. This convexity, which also depends on the length of the needles, may be produced on a separate inner ring or directly on the shaft journal using a grinding wheel with concave profile obtained by inclining the diamond impregnated cutting wheel. Further technical information is available, consult Nadella Technical Department.

TYPES AND DIMENSIONS
The standard needle type **BR**, of increased use, has rounded ends. On request, can also be supplied needles with flat ends, type **BP**. The standard dimensions of the BR type needles are given in the table following (pages 198, 199 and 200).
Needles of special dimensions may be manufactured on request.

CHARACTERISTICS
Nadella standard needles are made in through-hardened bearing steel of hardness 58-65 HRC.
Needles in heat treated corrosion resistant steel (hardness 57-62 HRC) may be produced on request the preferred diameters being 1.5, 2, 2.5, 3 and 4 mm.
The surface finish is 0.2 micron according to Ra system.
The profile of a needle is not cylindrical along its whole length as there is a very slight tape towards the ends.
Therefore, precise measurement of the diameter can only be carried out in the central area of the needle.
Needles having a greater taper at the ends may be supplied on request (suffix ... **DTN**).

MANUFACTURING TOLERANCES
In general, the diameter of standard needles with rounded ends type **BR** and with flat ends type **BP** is produced to a tolerance up to 10 micron less from the nominal dimension.
However, the maximum variation on any one production lot is 5 µm according to one of the classes of grade G5 in the table below.
On request, a variation of 3 µm may be obtained according to the classes of grade G3, and a variation of 2 µm according to the classes of grade G2.
Unless specified otherwise, quantities supplied are divided by Nadella into different classes of each grade G2, G3 or G5.
However the current supply are generally available in grade G2 according to the classes printed in bold type.
The colour codes shown for class G2 are only used by agreement.
The length of needles type BR and BP is kept within tolerance h13.

TOLERANCES ON NEEDLE DIAMETER

Grade G	Variation in diameter µm	Standard classes	Deviation from true circularity µm
2	2	**0-2 -1-3 -2-4 -3-5 -4-6** 5-7 -6-8 -7-9 -8-10	1
3	3	0-3 -15-4,5 -3-6 -4,5-7,5 -6-9 -7-10	1,5
5	5	0-5 -3-8 -5-10	2,5

Example of designation: ø 2,5 x 15,8 BR/G2-2-4

COLOUR CODES FOR THE CLASSES OF GRADE G2

0-2	1-3	2-4	3-5	4-6	5-7	6-8	7-9	8-10
Red	Pink	Blue	Sky blue	Withe	Grey	Green	Orange	Yellow

SHAFT AND HOUSING TOLERANCES

Operating conditions	Shaft Fw	Housing	
		Quota D	Quota B (1)
Rotation on a convex inner raceway	j5	F6	H12
Rotation on a cylindrical inner raceway	h5	F6	
Oscillatory motion	h5	G6	

(1) Nominal dimension B = length of needle Lw +0,2 mm
The cylindrical tolerance, defined as the difference in radii of two coaxial cylinders (ISO Standard 1101), should normally be less than a quarter of the manufacturing tolerance.
However, for high precision or high speed applications, it is recommended to restrict this tolerance to one-eighth of the manufacturing tolerance.

LIMITING SPEED

With effective oil lubrication and good alignment between shaft and housing, limiting speed may reach:

$$n(min^{-1}) = \frac{380\,000}{F_w}$$

(Fw: diameter of inner raceway in mm)

up to a maximum speed of 70 000 mm-1. For grease lubrication, use approximately half these values.

DYNAMIC AND STATIC CAPACITIES

The dynamic capacity C_R, in Newton (N), is given by the formula:

1) $C_R = K\ Lu$

K: variable factor relating to diameter of inner raceway

F_w: according to tables on pages 201, 202 and 203.

L_u (mm): effective needle length, as shown in the table of dimensions.

The static capacity C_{OR} in Newton (N), is given by the formula:

2) $C_{OR} = \frac{44\ (1 - ø)}{F_w + ø} ø\ L_u\ Z$

ø (mm): diameter of needles

L_u (mm): effective needle length, as shown in the table of dimensions.

Z: number of needles

F_w: diameter of inner raceway in mm.

NUMBER OF NEEDLES - CIRCUMFERENTIAL PLAY

The number of needles Z is given, as a function of the proposed shaft diameter Fw and the needle diameter ø, by the formula:

3) $Z = \frac{\pi(F_w + ø)}{ø}$

adjusted to the nearest whole number.

To ensure the circumferential play jc, which should normally be between 0.3 and 1 mm, the shaft diameter F_w is corrected with the following formula:

4) $F_w = \gamma ø + \frac{jc}{\pi}$

is a variable factor shown in the tables on pages 201, 202 and 203 in respect to the number of needles Z.

Example: needles of diameter d = 2. 5 mm on a shaft of diameter Fw = approx. 30 mm.

$$\text{Number of needle } Z = \frac{\pi\ (30 + 2{,}5)}{2{,}5}$$

To ensure circumferential play jc = 0,3 mm the shaft diameter F_w planned is corrected with the formula 4) with γ= 12.06 for 41 needles (tables on pages 201, 202 and 203), thus:

$$F_w = 12{,}06 \times 2{,}5 + \frac{0{,}3}{\pi} = 30{,}25 \text{ mm (adjusted up)}$$

The shaft diameter F_w can therefore be designed at the nominal dimension adjusted up to 30.3 mm to take 41 needles of diameter 2.5 mm, with a circumferential play of approx. 0.3 mm.

Note: Having established the number of needles Z, reference may then be made to the table on pages 201, 202 and 203, giving the corresponding F_w dimensions according to needle diameter and for a circumferential play between 0.3 and 0.6 mm. Thus, for 41 needles of diameter 2.5 mm, diameter F_w is 30.3 mm.

INSTALLATION OF LOOSE NEEDLE

Because of the large number of shaft diameters possible, depending on the number of needles chosen and their diameter, needles cannot be packed in rings ready for installation.

The needles, which are supplied loose, should therefore be arranged in a ring around the inner or outer raceway, which must be pre-greased to ensure their retention during installation of the parts that will retain them.

In cases where the shaft has to be introduced blind into a ring of needles, it may be useful to retain the needles in their housing by means of a mounting shaft of the same length as the needles. This can then be withdrawn when the shaft is introduced.

Arrangement of the needles in a ring may be carried out by hand where the number of installations is small.

The use of automatic machines with high-speed rotary loading should be considered only for production quantities large enough to ensure that the high cost of investment can be absorbed.

NEEDLE ROLLERS
WITH ROUNDED ENDS TYPE BR AND BP

∅		in mm	
>	≤	r min.	r max.
-	1	0,1	0,3
1	3	0,1	0,4
3	5	0,1	0,6

Example of designation:
∅ 3 x 23,8 BR

Example of designation:
∅ 3 x 23,8 BP

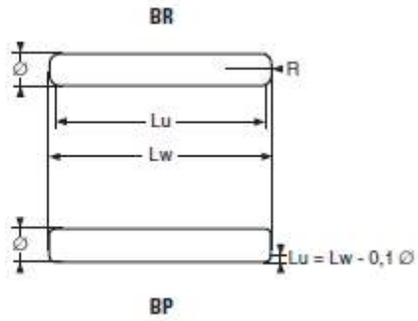

∅ mm	BP Lw mm	BR		Weight ‰ g
		Lw mm	Lu mm	
1	-	5.8	5	34
	-	7.8	7	46
1.5	5.8	5.8	4.9	76
	6.8	6.8	5.9	90
	-	7.8	6.9	103
	9.8	9.8	8.9	130
	-	11.8	10.9	157
	-	13.8	12.9	185
	-	15.8	14.9	210
2	-	3.8	2.8	87
	-	5.8	4.8	135
	7.8	7.8	6.8	182
	8.8	-	-	-
	9.8	9.8	8.8	230
	-	11.8	10.8	280
	12.8	-	-	-
	13.8	13.8	12.8	325
	15.8	15.8	14.8	375
	-	17.8	16.8	420
	19.8	19.8	18.8	470
2.5	7.8	7.8	6.7	285
	-	9.8	8.7	360
	-	11.8	10.7	430
	-	13.8	12.7	510
	14	-	-	-
	15.8	15.8	14.7	580
	-	17.8	16.7	660
	-	19.8	18.7	730
	-	21.8	20.7	800
	27.8	23.8	22.7	880

∅		in mm	
>	≤	r min.	r max.
-	1	0,1	0,3
1	3	0,1	0,4
3	5	0,1	0,6

Example of designation:
∅ 3 x 23,8 BR

Example of designation:
∅ 3 x 23,8 BP

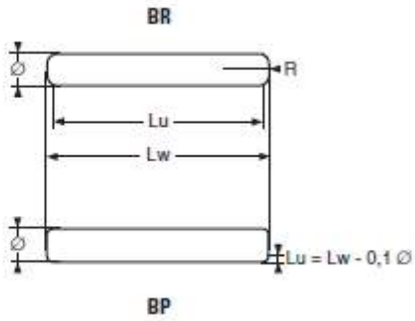

∅ mm	BP Lw mm	BR		Weight ‰ g
		Lw mm	Lu mm	
3	9.8 9.8 8.5 510	9.8	8.5	510
	11.8 11.8 10.5 620	11.8	10.5	620
	12.8	-	-	-
	13.8 13.8 12.5 730	13.8	12.5	730
	15.8 15.8 14.5 840	15.8	14.5	840
	17.8 17.8 16.5 940	17.8	16.5	940
	19.8 19.8 18.5 1 050	19.8	18.5	1.050
	21.8 21.8 20.5 1 150	21.8	20.5	1.150
	23.8 23.8 22.5 1 260	23.8	22.5	1.260
	25.4	-	-	-
	25.8 25.8 24.5 1 370	25.8	24.5	1.370
	26.8	-	-	-
	27.8 27.8 26.5 1 480	27.8	26.5	1.480
	29.8 29.8 28.5 1 600	29.8	28.5	1.600
3.5	8.8	-	-	-
	-	11.8	10.3	840
	-	13.8	12.3	990
	-	15.8	14.3	1.130
	-	17.8	16.3	1.280
	-	19.8	18.3	1.430
	-	21.8	20.3	1.510
	-	23.8	22.3	1.720
	-	25.8	24.3	1.850
	-	27.8	26.3	2.000
	-	29.8	28.3	2.150
	-	34.8	33.3	2.500

NEEDLE ROLLERS
WITH ROUNDED ENDS BR AND BP

10.2

∅		in mm	
>	≤	r min.	r max.
-	1	0,1	0,3
1	3	0,1	0,4
3	5	0,1	0,6

Example of designation:
∅ 3 x 23,8 BR

Example of designation:
∅ 3 x 23,8 BP

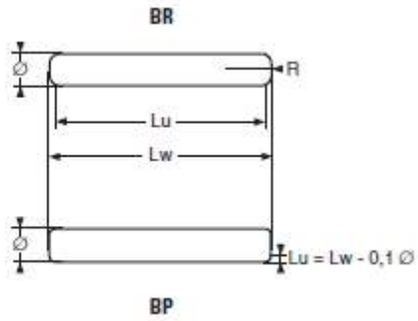

∅ mm	BP Lw mm	BR Lw mm	BR Lu mm	Weight ‰ g
4	8.8	13.8	12.1	1 280
	-	15.8	14.1	1 480
	-	17.8	16.1	1 650
	-	19.8	18.1	1 850
	-	21.8	20.1	2 050
	-	23.8	22.1	2 250
	-	25.8	24.1	2 450
	-	27.8	26.1	2 600
	-	29.8	28.1	2 800
	-	34.8	33.1	3 300
	-	39.8	38.1	3 800
	-	44.8	43.1	4 200
5	8.8	-	-	-
	-	19.8	17.5	2 900
	-	21.8	19.5	3 200
	-	23.8	21.5	3 500
	-	25.8	23.5	3 800
	-	27.8	25.5	4 100
	-	29.8	27.5	4 400
	-	34.8	32.5	5 100
	-	39.8	37.5	5 900
	-	49.8	47.5	7 400
				Unit weight g
6	-	29.8	27.6	6.3
	-	39.8	37.6	8.4
	-	59.8	57.2	12.7
7	-	69.8	66.9	20.2
8	-	79.8	76.7	30

NEEDLE ROLLERS
STANDARD

10.3

Shaft diameter Fw for Z needles of diameter ø and a circumferential clearance jc between 0.3 and 0.6 mm
Coefficient ɣ : formula 4)
Coefficient K: formula 1)

∅ mm		1		1.5		2		2.5		3		3.5		4		5	
Z	ɣ	Fw mm	K	Fw mm	K	Fw mm	K	Fw mm	K	Fw mm	K	Fw mm	K	Fw mm	K	Fw mm	K
10	2.24	2.3	531	3.5	823	4.6	1.119	5.7	1.420	6.9	1.730	8.0	2.040	9.1	2.351	11.3	2.985
11	2.55	2.7	586	4	905	5.2	1.228	6.5	1.561	7.8	1.898	9.1	2.241	10.3	2.583	12.9	3.283
12	2.86	3	635	4.4	978	5.9	1.334	7.3	1.693	8.7	2.058	10.2	2.429	11.6	2.803	14.5	3.562
13	3.18	3.3	680	4.9	1.050	6.5	1.430	8.1	1.817	9.7	2.210	11.3	2.608	12.9	3.010	16	3.822
14	3.49	3.6	723	5.4	1.118	7.1	1.522	8.9	1.935	10.6	2.352	12.4	2.776	14.1	3.203	17.6	4.070
15	3.81	3.9	765	5.9	1.182	7.8	1.609	9.7	2.045	11.6	2.488	13.5	2.936	15.4	3.388	19.2	4.306
16	4.13	4.2	804	6.3	1.242	8.4	1.693	10.5	2.151	12.5	2.617	14.6	3.088	16.6	3.564	20.8	4.530
17	4.44	4.5	841	6.8	1.301	9	1.772	11.2	2.253	13.5	2.740	15.7	3.233	17.9	3.732	22.3	4.743
18	4.76	4.9	878	7.3	1.356	9.7	1.849	12.0	2.349	14.4	2.858	16.8	3.372	19.2	3.893	23.9	4.948
19	5.08	5.2	913	7.8	1.411	10.3	1.921	12.8	2.443	15.4	2.971	17.9	3.507	20.4	4.048	25.5	5.144
20	5.39	5.5	945	8.2	1.463	10.9	1.992	13.6	2.532	16.3	3.080	19	3.635	21.7	4.196	27.1	5.333
21	5.71	5.8	978	8.7	1.512	11.6	2.059	14.4	2.618	17.3	3.185	20.1	3.758	23	4.339	28.7	5.515
22	6.03	6.1	1.010	9.2	1.560	12.2	2.125	15.2	2.701	18.2	3.286	21.2	3.879	24.3	4.477	30.3	5.690
23	6.34	6.4	1.039	9.6	1.607	12.8	2.189	16	2.783	19.2	3.385	22.3	3.996	25.5	4.611	31.8	5.861
24	6.66	6.8	1.067	10.1	1.652	13.5	2.250	16.8	2.861	20.1	3.481	23.4	4.107	26.8	4.741	33.4	6.026
25	6.98	7.1	1.097	106	1.695	14.1	2.311	17.6	2.936	21.1	3.572	24.6	4.216	28.1	4.866	35	6.187
26	7.30	7.4	1.124	11.1	1.738	14.7	2.369	18.4	3.011	22	3.664	25.7	4.322	29.3	4.991	36.6	6.342
27	7.61	7.7	1.151	11.6	1.779	15.4	2.425	19.2	3.082	23	3.751	26.8	4.426	30.6	5.109	38.2	6.494
28	7.93	8	1.178	12	1.822	16	2.481	20	3.153	23.9	3.836	27.9	4.528	31.9	5.225	39.8	6.642
29	8.25	8.4	1.202	12.5	1.860	16.6	2.535	20.8	3.221	24.9	3.919	29	4.626	33.1	5.341	41.4	6.786
30	8.57	8.7	1.228	13	1.898	17.3	2.587	21.6	3.289	25.8	4.002	30.1	4.723	34.4	5.451	43	6.927
31	8.88	9	1.252	13.5	1.936	17.9	2.639	22.3	3.356	26.8	4.081	31.2	4.818	35.7	5.560	44.5	7.069
32	9.20	9.3	1.277	13.9	1.975	18.5	2.691	23.1	3.420	27.7	4.161	32.3	4.910	36.9	5.668	46.1	7.204
33	9.52	9.6	1.301	14.4	2.011	19.2	2.739	23.9	3.483	28.7	4.236	33.5	4.998	38.2	5.772	47.7	7.336
34	9.84	9.9	1.325	14.9	2.046	19.8	2.788	24.7	3.545	29.7	4.311	34.6	5.088	39.5	5.874	49.3	7.466
35	10.16	10.3	1.345	15.4	2.081	20.5	2.835	25.5	3.606	30.6	4.386	35.7	5.176	40.8	5.974	50.9	7.595
36	10.47	10.6	1.368	15.8	2.118	21.1	2.883	26.3	3.666	31.5	4.460	36.8	5.262	42	6.075	52.5	7.720
37	10.79	10.9	1.390	16.3	2.150	21.7	2.930	27.1	3.725	32.5	4.530	37.9	5.346	43.3	6.172	54.1	7.843
38	11.11	11.2	1.413	16.8	2.183	22.4	2.974	27.9	3.782	33.5	4.600	39	5.430	44.6	6.267	55.7	7.965
39	11.43	11.5	1.434	17.3	2.216	23	3.020	28.7	3.839	34.4	4.670	40.1	5.512	45.9	6.360	57.3	8.085
40	11.75	21.9	1.453	17.8	2.247	23.6	3.065	29.5	3.895	35.4	4.738	41.3	5.590	47.1	6.455	58.9	8.202

NEEDLE ROLLERS
STANDARD

Shaft diameter Fw for Z needles of diameter ø and a circumferential clearance jc between 0.3 and 0.6 mm
Coefficient ɣ : formula 4)
Coefficient K: formula 1)

∅ mm		1		1.5		2		2.5		3		3.5		4		5	
Z	ɣ	Fw mm	K	Fw	K	Fw mm	K	Fw mm	K	Fw mm	K	Fw mm	K	Fw mm	K	Fw mm	K
41	12.06	-	-	-	-	24.3	3.107	30.3	3.949	36.3	4.805	42.3	5.673	48.4	6.546	60.4	8.321
42	12.38	-	-	-	-	24.9	3.150	31.1	4.005	37.3	4.871	43.5	5.748	49.7	6.635	62	8.435
43	12.70	-	-	-	-	25.5	3.194	31.9	4.058	38.2	4.938	44.6	5.826	50.9	6.726	63.6	8.548
44	13.02	-	-	-	-	26.2	3.233	32.7	4.111	39.2	5.001	45.7	5.902	52.2	6.813	65.2	8.660
45	13.34	-	-	-	-	26.8	3.275	33.5	4.163	40.2	5.064	46.8	5.978	53.5	6.899	66.8	8.769
46	13.65	-	-	-	-	27.4	3.317	34.3	4.215	41.1	5.127	47.9	6.052	54.7	6.986	68.4	8.879
47	13.97	-	-	-	-	28.1	3.356	35.1	4.266	42	5.190	49	6.126	56	7.071	70	8.986
48	14.29	-	-	-	-	28.7	3.396	35.9	4.316	43	5.251	50.2	6.197	57.3	7.153	71.6	9.091
49	14.61	-	-	-	-	29.4	3.434	36.7	4.366	44	5.311	51.3	6.286	58.6	7.236	73.2	9.196
50	14.93	-	-	-	-	30	3.474	37.5	4.415	44.9	5.372	52.4	6.339	59.9	7.317	74.8	9.300
51	15.24	-	-	-	-	30.6	3.513	38.2	4.465	45.9	5.430	53.5	6.409	61.1	7.399	76.3	9.405
52	15.56	-	-	-	-	31.3	3.550	39	4.514	46.8	5.490	54.6	6.479	62.4	7.479	77.9	9.506
53	15.88	-	-	-	-	31.9	3.588	39.8	4.561	47.8	5.547	55.7	6.548	63.7	7.556	79.5	9.606
54	16.20	-	-	-	-	32.5	3.626	40.6	4.609	48.7	5.606	56.8	6.616	64.9	7.637	81.1	9.706
55	16.52	-	-	-	-	33.2	3.661	41.4	4.655	49.7	5.661	58	6.681	66.2	7.713	82.7	9.804
56	16.83	-	-	-	-	33.8	3.699	42.2	4.701	50.6	5.719	59	6.750	67.5	7.789	84.3	9.901
57	17.15	-	-	-	-	34.4	3.736	43	4.747	51.6	5.774	60.2	6.814	68.7	7.867	85.9	9.997
58	17.47	-	-	-	-	35.1	3.770	43.8	4.793	52.5	5.831	61.3	6.880	70	7.942	87.5	10.093
59	17.79	-	-	-	-	35.7	3.806	44.6	4.837	53.5	5.884	62.4	6.944	71.3	8.016	89.1	10.188
60	18.11	-	-	-	-	36.4	3.840	45.4	4.882	54.5	5.938	63.5	7.009	72.6	8.090	90.7	10.282
61	18.43	-	-	-	-	-	-	46.2	4.926	55.4	5.992	64.6	7.073	73.9	8.162	92.3	10.374
62	18.74	-	-	-	-	-	-	47	4.970	56.4	6.045	65.7	7.136	75.1	8.236	93.8	10.468
63	19.06	-	-	-	-	-	-	47.8	5.013	57.3	6.100	66.8	7.198	76.4	8.307	95.4	10.559
64	19.38	-	-	-	-	-	-	48.6	5.056	58.3	6.150	68	7.258	77.7	8.379	97	10.651
65	19.70	-	-	-	-	-	-	49.4	5.099	59.2	6.204	69.1	7.320	78.9	8.451	98.6	10.740
66	20.02	-	-	-	-	-	-	50.2	5.141	60.2	6.254	70.2	7.381	80.2	8.521	100.2	10.829
67	20.33	-	-	-	-	-	-	51	5.184	61.1	6.306	71.3	7.442	81.5	8.590	101.8	10.917
68	20.65	-	-	-	-	-	-	51.8	5.225	62.1	6.357	72.4	7.502	82.7	8.660	103.4	11.005
69	20.97	-	-	-	-	-	-	52.6	5.266	63	6.408	73.5	7.562	84	8.729	105	11.092
70	21.29	-	-	-	-	-	-	53.4	5.308	64	6.458	74.7	7.620	85.3	8.796	106.6	11.179

Shaft diameter Fw for Z needles of diameter ø and a circumferential clearance jc between 0.3 and 0.6 mm
Coefficient ɣ : formula 4)
Coefficient K: formula 1)

∅ mm		1		1.5		2		2.5		3		3.5		4		5	
Z	ɣ	Fw mm	K	Fw mm	K	Fw mm	K	Fw mm	K	Fw mm	K	Fw mm	K	Fw mm	K	Fw mm	K
71	21.61	-	-	-	-	-	-	54.2	5.349	65	6.506	75.8	7.678	86.6	8.863	108.2	11.265
72	21.93	-	-	-	-	-	-	55	5.389	65.9	6.557	76.9	7.737	87.9	8.930	109.8	11.350
73	22.24	-	-	-	-	-	-	55.7	5.431	66.9	6.604	78	7.795	89.1	8.998	111.3	11.437
74	22.56	-	-	-	-	-	-	56.5	5.471	67.8	6.654	79.1	7.852	90.4	9.064	112.9	11.520
75	22.88	-	-	-	-	-	-	57.3	5.510	68.8	6.702	80.2	7.910	91.7	9.129	114.5	11.604
76	23.20	-	-	-	-	-	-	58.1	5.550	69.7	6.751	81.3	7.966	92.9	9.195	116.1	11.686
77	23.52	-	-	-	-	-	-	58.9	5.589	70.7	6.798	82.5	8.022	94.2	9.260	117.7	11.769
78	23.83	-	-	-	-	-	-	59.7	5.628	71.6	6.846	83.5	8.079	95.5	9.324	119.3	11.851
79	24.15	-	-	-	-	-	-	60.5	5.666	72.6	6.892	84.7	8.134	96.7	9.389	120.9	11.933
80	24.47	-	-	-	-	-	-	61.3	5.704	73.5	6.940	85.8	8.189	98	9.453	122.5	12.013
81	24.79	-	-	-	-	-	-	-	-	74.5	6.985	86.9	8.243	99.3	9.516	124.1	12.093
82	25.11	-	-	-	-	-	-	-	-	75.5	7.030	88	8.298	100.6	9.578	125.7	12.173
83	25.43	-	-	-	-	-	-	-	-	76.4	7.078	89.1	8.353	101.9	9.640	127.3	12.252
84	25.74	-	-	-	-	-	-	-	-	77.4	7.123	90.2	8.407	103.1	9.703	128.8	12.332
85	26.06	-	-	-	-	-	-	-	-	78.3	7.169	91.3	8.461	104.4	9.764	130.4	12.410
86	26.38	-	-	-	-	-	-	-	-	79.3	7.213	92.5	8.512	105.7	9.825	132	12.488
87	26.70	-	-	-	-	-	-	-	-	80.2	7.258	93.6	8.565	106.9	9.887	133.6	12.566
88	27.07	-	-	-	-	-	-	-	-	81.2	7.302	94.7	8.618	108.2	9.947	135.2	12.643
89	27.34	-	-	-	-	-	-	-	-	82.2	7.345	95.8	8.670	109.5	10.007	136.8	12.720
90	27.65	-	-	-	-	-	-	-	-	83.1	7.390	96.9	8.723	110.7	10.069	138.4	12.796
91	27.97	-	-	-	-	-	-	-	-	84	7.436	98	8.775	112	10.128	140	12.871
92	28.29	-	-	-	-	-	-	-	-	85	7.479	99.2	8.825	113.3	10.187	141.6	12.947
93	28.61	-	-	-	-	-	-	-	-	86	7.520	100.3	8.876	114.6	10.245	143.2	13.021
94	28.93	-	-	-	-	-	-	-	-	86.9	7.565	101.4	8.927	115.9	10.303	144.8	13.096
95	29.24	-	-	-	-	-	-	-	-	87.9	7.607	102.5	8.978	117.1	10.363	146.3	13.172
96	29.56	-	-	-	-	-	-	-	-	88.8	7.650	103.6	9.028	118.4	10.420	147.9	13.245
97	29.88	-	-	-	-	-	-	-	-	89.8	7.692	104.7	9.079	119.7	10.478	149.5	13.318
98	30.20	-	-	-	-	-	-	-	-	90.7	7.735	105.8	9.129	120.9	10.537	151.1	13.391
99	30.52	-	-	-	-	-	-	-	-	91.7	7.777	107	9.177	122.2	10.593	152.7	13.464
100	30.84	-	-	-	-	-	-	-	-	92.7	7.817	108.1	9.227	123.5	10.650	154.3	13.536

INNER RINGS

11

PAGE 174 11.1 TECHNICAL SPECIFICATIONS

PAGE 175 11.2 INNER RINGS

PAGE 184 11.3 CYLINDRICAL INNER RINGS WITH HOLE FOR RNA BEARINGS

INNER RINGS
TECHNICAL SPECIFICATIONS

11.1

When it is impractical to meet the shaft raceway design requirements (hardness, surface finish, case depth, etc.) standard inner rings may be used.
Inner rings are made of rolling bearing steel and after hardening, their bores, raceways and end surfaces are ground.
Inner rings may be used to provide inner raceway surfaces for radial needle roller bearings, needle roller bearings and needle bushes with opened and closed end.
For a generic bearing with a given internal diameter, there is a choice of inner rings with the same diameter F but of different widths. Normally, the width of the inner ring should never be less than that of the bearing. Alternatively, a cylindrical inner ring wider than the bearing may be used to permit the fitting of a sealing ring, which would locate on the extended portion at one end of the bearing. In this case, if the inner ring has an oil hole, care should be taken to ensure that the hole does not coincide with the ends of the needles.

CONSTRUCTION

Inner rings are available in four basic designs and differ only by the chamfers at the ends of the raceway surfaces, the lubricant access holes and the raceway profile.
Inner rings of series **JR** have chamfers to assist in bearing installation but are without lubricating holes.
Inner rings of series **JR.JS1** have bearing installation chamfers and lubricating holes (bore diameters 5 to 50 mm). Inner rings of series **JRZ.JS1** are without installation chamfers, allowing for maximum possible raceway contact.

In the following tables are listed all the inner rings for needle bushes, cages, needle bearings with cages, with full complement and combined bearings that are showed in this catalogue.

Inner rings features

Series	Lubrication hole	Chamfer
JR		x
JR.JS1	x	x
JRZ.JS1	x	

Nominal diameter of lubrication hole

Series	Internal diameter of the inner ring mm		Nominal diameter of the lubrication hole (mm)
	>	≤	
JR.JS1 JRZ.JS1	-	20	2
	20	40	2,5
	40	80	3
	80	-	3.5

Construction tolerance of inner rings

Series	Tolerance on external diameter F	Other tolerances
JR with suffix P	h5	According ISO 492

INNER RINGS
SUMMARY TABLE

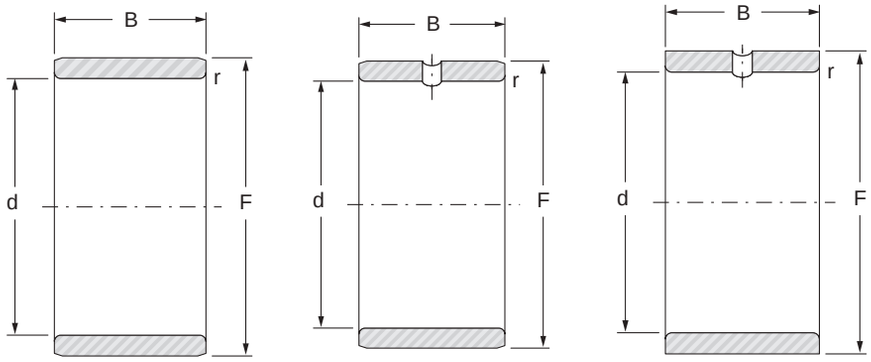

JR JR.JS1 JRZ.JS1

Shaft ∅ mm	Designation	d mm	F mm	B mm	$r_{s\ min}$ mm	Weight kg
5	JR5x8x8JS1	5	8	8	0.3	0.002
	JR5x8x12	5	8	12	0.3	0.003
	JR5x8x16	5	8	16	0.3	0.004
6	JR6x9x8JS1	6	9	8	0.3	0.002
	JR6x9x12	6	9	12	0.3	0.003
	JR6x9x16	6	9	16	0.3	0.004
	JR6x10x10	6	10	10	0.3	0.004
	JR6x10x10JS1	6	10	10	0.3	0.004
	JRZ6x10x12JS1	6	10	12	0.3	0.005
7	JR7x10x10.5	7	10	10.5	0.3	0.003
	JR7x10x12	7	10	12	0.3	0.004
	JR7x10x16	7	10	16	0.3	0.005
8	JR8x12x10	8	12	10	0.3	0.005
	JR8x12x10JS1	8	12	10	0.3	0.005
	JR8x12x10.5	8	12	10.5	0.3	0.005
	JRZ8xl2x12JS1	8	12	12	0.3	0.006
	JR8x12x12.5	8	12	12.5	0.3	0.006
	JR 8x12x16	8	12	16	0.3	0.007
9	JR9x12x12	9	12	12	0.3	0.005
	JR9x12x16	9	12	16	0.3	0.006
10	JR10x13x12.5	10	13	12.5	0.3	0.005
	JR10x14x11JS1	10	14	11	0.3	0.007
	JR10x14x12	10	14	12	0.3	0.007
	JR10x14x12JS1	10	14	12	0.3	0.007
	JR10x14x13	10	14	13	0.3	0.007
	JRZ10x14x14JS1	10	14	14	0.3	0.008
	JR10x14x16	10	14	16	0.3	0.009
	JR10x14x20	10	14	20	0.3	0.012

INNER RINGS
SUMMARY TABLE

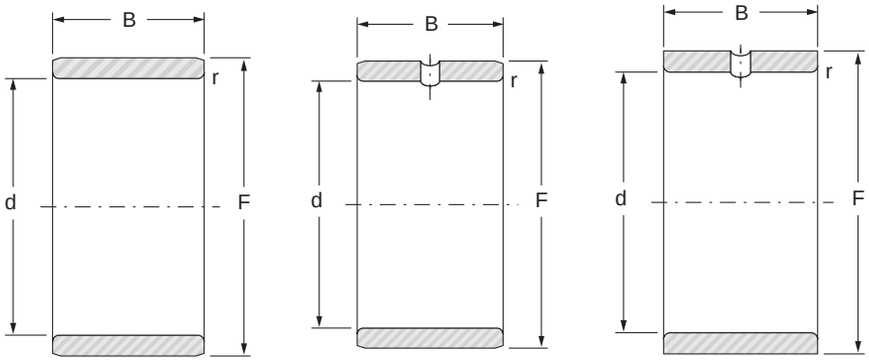

JR **JR.JS1** **JRZ.JS1**

Shaft ∅ mm	Designation	d mm	F mm	B mm	$r_{s\ min}$ mm	Weight kg
12	**JR12x15x12.5**	12	15	12.5	0.3	0.006
	JR12x15x16	12	15	16	0.3	0.008
	JR12x15x16.5	12	15	16.5	0.3	0.008
	JR12x15x18.5	12	15	18.5	0.3	0.009
	JR12x15x22.5	12	15	22.5	0.3	0.011
	JR12x16x12	12	16	12	0.3	0.008
	JR12x16x12JS1	12	16	12	0.3	0.008
	JR12x16x13	12	16	13	0.3	0.008
	JRZ12x16x14JS1	12	16	14	0.3	0.010
	JR12x16x16	12	16	16	0.3	0.011
	JR12x16x20	12	16	20	0.3	0.014
	JR12x16x22	12	16	22	0.3	0.015
14	**JR14x17x17**	14	17	17	0.3	0.009
15	**JR15x18x16.5**	15	18	16.5	0.3	0.010
	JR15x19x16	15	19	16	0.3	0.013
	JR15x19x20	15	19	20	0.3	0.017
	JR15x20x12	15	20	12	0.3	0.012
	JR15x20x12JS1	15	20	12	0.3	0.012
	JR15x20x13	15	20	13	0.3	0.014
	JRZ15x20x14JS1	15	20	14	0.3	0.015
	JR15x20x16	15	20	16	0.3	0.017
	JR 15x20x20	15	20	20	0.35	0.021
	JR15x20x23	15	20	23	0.3	0.025
	JR15x20x26	15	20	26	0.3	0.028

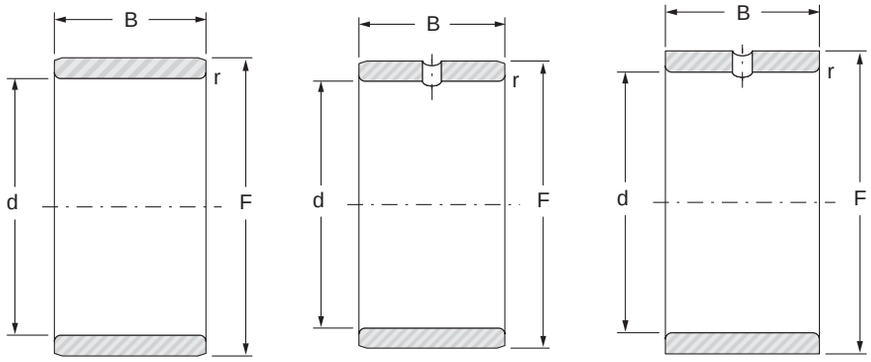

JR JR.JS1 JRZ.JS1

Shaft ∅ mm	Designation	d mm	F mm	B mm	$r_{s\ min}$ mm	Weight kg
17	**JR17x20x16.5**	17	20	16.5	0.3	0.011
	JR17x20x20	17	20	20	0.3	0.014
	JR17x20x20.5	17	20	20.5	0.3	0.014
	JR17x20x30.5	17	20	30.5	0.3	0.021
	JR17x21x16	17	21	16	0.3	0.015
	JR17x21x20	17	21	20	0.3	0.019
	JR17x22x13	17	22	13	0.3	0.015
	JR17x22x16	17	22	16	0.3	0.019
	JR17x22x16JS1	17	22	16	0.3	0.019
	JRZ17x22x16JS1	17	22	16	0.3	0.019
	JR17x22x20	17	22	20	0.35	0.023
	JR17x22x23	17	22	23	0.3	0.028
	JR17x22x26	17	22	26	0.3	0.031
	JR17x22x32	17	22	32	0.3	0.038
20	**JR20x24x16**	20	24	16	0.3	0.018
	JR20x24x20	20	24	20	0.3	0.022
	JR20x25x16	20	25	16	0.3	0.022
	JR20x25x16JS1	20	25	16	0.3	0.022
	JR20x25x17	20	25	17	0.3	0.023
	JRZ20x25x18JS1	20	25	18	0.3	0.025
	JR20x25x20	20	25	20	0.3	0.028
	JR20x25x20.5	20	25	20.5	0.3	0.029
	JR20x25x26	20	25	26	0.3	0.036
	JR20x25x26.5	20	25	26.5	0.3	0.037
	JR20x25x30	20	25	30	0.3	0.042
	JR20x25x32	20	25	32	0.3	0.044
	JR20x25x38.5	20	25	38.5	0.3	0.054

INNER RINGS
SUMMARY TABLE

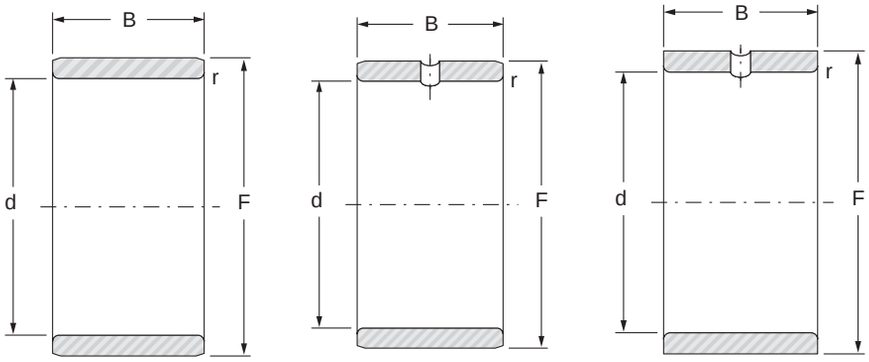

JR **JR.JS1** **JRZ.JS1**

Shaft ∅ mm	Designation	d mm	F mm	B mm	$r_{s\ min}$ mm	Weight kg
22	**JR22x26x16**	22	26	16	0.3	0.019
	JR22x26x20	22	26	20	0.3	0.023
	JR22x28x17	22	28	17	0.3	0.030
	JR22x28x20.5	22	28	20.5	0.3	0.038
	JR22x28x30	22	28	30	0.3	0.056
23	**JR23x28x20**	23	28	20	0.35	0.030
25	**JR25x29x20**	25	29	20	0.3	0.027
	JR25x29x30	25	29	30	0.3	0.040
	JR25x30x16	25	30	16	0.3	0.027
	JR25x30x16JS1	25	30	16	0.3	0.027
	JR25x30x17	25	30	17	0.3	0.028
	JRZ25x30x18JS1	25	30	18	0.3	0.031
	JR25x30x20	25	30	20	0.3	0.034
	JR25x30x20.5	25	30	20.5	0.3	0.035
	JR25x30x26	25	30	26	0.3	0.044
	JR25x30x26.5	25	30	26.5	0.3	0.045
	JR25x30x30	25	30	30	0.3	0.051
	JR25x30x32	25	30	32	0.3	0.054
	JR25x30x38.5	25	30	38.5	0.3	0.066
28	**JR28x32x17**	28	32	17	0.3	0.028
	JR28x32x20	28	32	20	0.3	0.030
	JR28x32x30	28	32	30	0.3	0.044
30	**JR30x35x16**	30	35	16	0.3	0.031
	JR30x35x17	30	35	17	0.3	0.033
	JRZ30x35x18JS1	30	35	18	0.3	0.036
	JR30x35x20	30	35	20	0.3	0.039
	JRZ30x35x20JS1	30	35	20	0.3	0.039

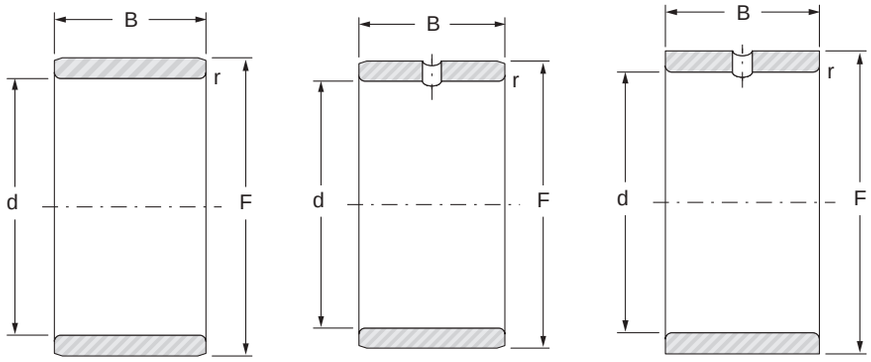

JR **JR.JS1** **JRZ.JS1**

Shaft ∅ mm	Designation	d mm	F mm	B mm	$r_{s\ min}$ mm	Weight kg
30	**JR30x35x20.5**	30	35	20.5	0.3	0.040
	JR30x35x26	30	35	26	0.3	0.054
	JR30x35x30	30	35	30	0.3	0.057
	JR30x35x32	30	35	32	0.3	0.062
	JR30x38x20JS1	30	38	20	0.6	0.067
32	**JR32x37x20**	32	37	20	0.3	0.043
	JR32x37x30	32	37	30	0.3	0.064
	JR32x40x20	32	40	20	0.6	0.069
	JR32x40x36	32	40	36	0.6	0.128
35	**JR35x40x17**	35	40	17	0.3	0.040
	JR35x40x20	35	40	20	0.3	0.046
	JR35x40x20.5	35	40	20.5	0.3	0.049
	JR35x40x22	35	40	22	0.3	0.052
	JR35x40x30	35	40	30	0.3	0.071
	JR35x40x34	35	40	34	0.3	0.080
	JR35x40x40	35	40	40	0.3	0.094
	JR35x42x20	35	42	20	0.6	0.065
	JR35x42x20JS1	35	42	20	0.6	0.065
	JRZ35x42x23JS1	35	42	23	0.6	0.074
	JR35x42x36	35	42	36	0.6	0.122
	JR35x44x22	35	44	22	0.6	0.097
37	**JR37x42x20**	37	42	20	0.35	0.046
38	**JR38x43x20**	38	43	20	0.3	0.050
	JR38x43x30	38	43	30	0.3	0.075

INNER RINGS
SUMMARY TABLE

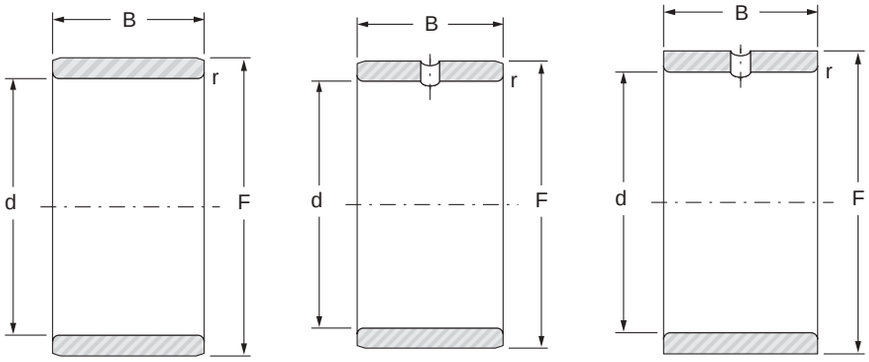

JR **JR.JS1** **JRZ.JS1**

Shaft ∅ mm	Designation	d mm	F mm	B mm	$r_{s\ min}$ mm	Weight kg
40	**JR40x45x17**	40	45	17	0.3	0.044
	JR40x45x20	40	45	20	0.3	0.052
	JR40x45x20.5	40	45	20.5	0.3	0.054
	JR40x45x25	40	45	25	0.35	0.062
	JR40x45x30	40	45	30	0.3	0.078
	JR40x45x34	40	45	34	0.3	0.089
	JR40x45x40	40	45	40	0.3	0.115
	JR40x48x22	40	48	22	0.6	0.094
	JRZ40x48x23JS1	40	48	23	0.6	0.100
	JR40x48x40	40	48	40	0.6	0.173
	JR40x50x20	40	50	20	1	0.110
42	**JR42x47x20**	42	47	20	0.3	0.055
	JR42x47x30	42	47	30	0.3	0.083
45	**JR45x50x20**	45	50	20	0.3	0.058
	JR45x50x25	45	50	25	0.6	0.073
	JR45x50x25.5	45	50	25.5	0.3	0.075
	JR45x50x35	45	50	35	0.6	0.103
	JR45x50x40	45	50	40	0.3	0.117
	JR45x52x22	45	52	22	0.6	0.090
	JR45x52x23	45	52	23	0.6	0.096
	JRZ45x52x23JS1	45	52	23	0.6	0.096
	JR45x52x40	45	52	40	0.6	0.167
	JR45x55x20	45	55	20	1	0.133
	JR45x55x20JS1	45	55	20	1	0.133
	JR45x55x22	45	55	22	1	0.135
	JR45x55x40	45	55	40	1	0.247

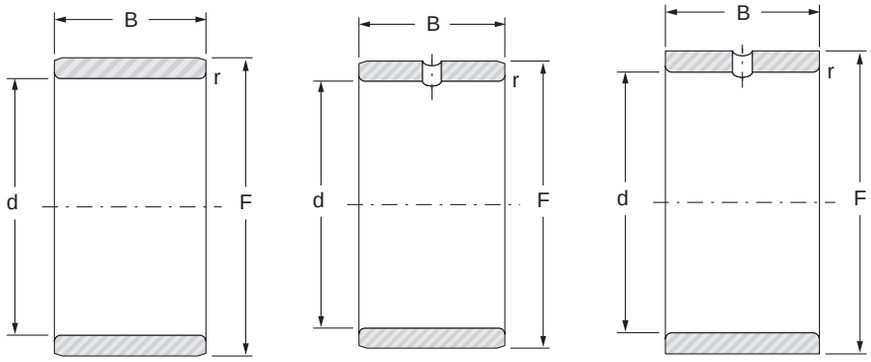

JR JR.JS1 JRZ.JS1

Shaft ∅ mm	Designation	d mm	F mm	B mm	$r_{s\ min}$ mm	Weight kg
50	**JR50x55x20**	50	55	20	0.3	0.065
	JR50x55x25	50	55	25	0.6	0.081
	JR50x55x35	50	55	35	0.6	0.113
	JR50x55x40	50	55	40	0.3	0.130
	JR50x58x22	50	58	22	0.6	0.117
	JRZ50x58x23JS1	50	58	23	0.6	0.122
	JR50x58x40	50	58	40	0.6	0.213
	JR50x60x20	50	60	20	1	0.155
	JR50x60x20JS1	50	60	20	1	0.155
	JR50x60x25	50	60	25	1	0.170
	JR50x60x40	50	60	40	1	0.310
55	**JR55x60x25**	55	60	25	0.6	0.088
	JR55x60x35	55	60	35	0.6	0.124
	JR55x63x25	55	63	25	1	0.141
	JR55x63x45	55	63	45	1	0.286
	JR55x65x30	55	65	30	1	0.222
	JR55x65x60	55	65	60	1	0.444
60	**JR60x68x25**	60	68	25	0.6	0.153
	JR60x68x35	60	68	35	0.6	0.220
	JR60x68x45	60	68	45	1	0.284
	JR60x70x25	60	70	25	1	0.200
	JR60x70x30	60	70	30	1	0.240
	JR60x70x60	60	70	60	1	0.480

INNER RINGS
SUMMARY TABLE

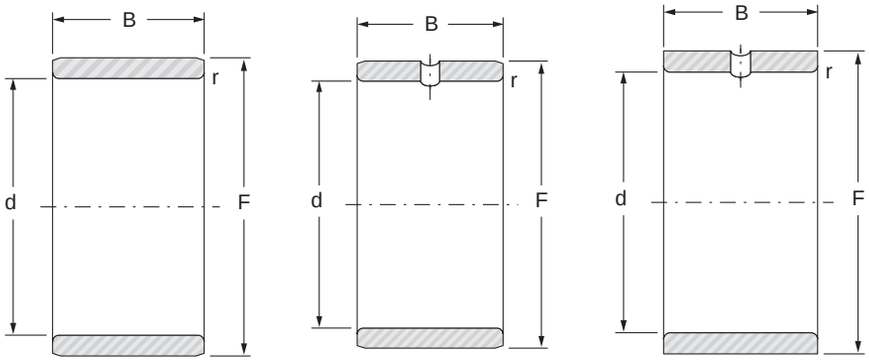

JR **JR.JS1** **JRZ.JS1**

Shaft ∅ mm	Designation	d mm	F mm	B mm	$r_{s\ min}$ mm	Weight kg
65	**JR65x72x25**	65	72	25	1	0.143
	JR65x72x45	65	72	45	1	0.266
	JR65x73x25	65	73	25	0.6	0.170
	JR65x73x35	65	73	35	0.6	0.240
	JR65x75x28	65	75	28	1	0.240
	JR65x75x30	65	75	30	1	0.260
	JR65x75x60	65	75	60	1	0.520
70	**JR70x80x25**	70	80	25	1	0.230
	JR70x80x30	70	80	30	1	0.270
	JR70x80x35	70	80	35	1	0.320
	JR70x80x54	70	80	54	1	0.500
	JR70x80x60	70	80	60	1	0.556
75	**JR75x85x25**	75	85	25	1	0.240
	JR75x85x30	75	85	30	1	0.289
	JR75x85x35	75	85	35	1	0.338
	JR75x85x54	75	85	54	1	0.530
80	**JR80x90x25**	80	90	25	1	0.260
	JR80x90x30	80	90	30	1	0.306
	JR80x90x35	80	90	35	1	0.355
	JR80x90x54	80	90	54	1	0.565
85	**JR85x95x26**	85	95	26	1	0.290
	JR85x95x30	85	95	30	1	0.334
	JR85x95x36	85	95	36	1	0.397
	JR85x100x35	85	100	35	1.1	0.595
	JR85x100x63	85	100	63	1.1	1.080

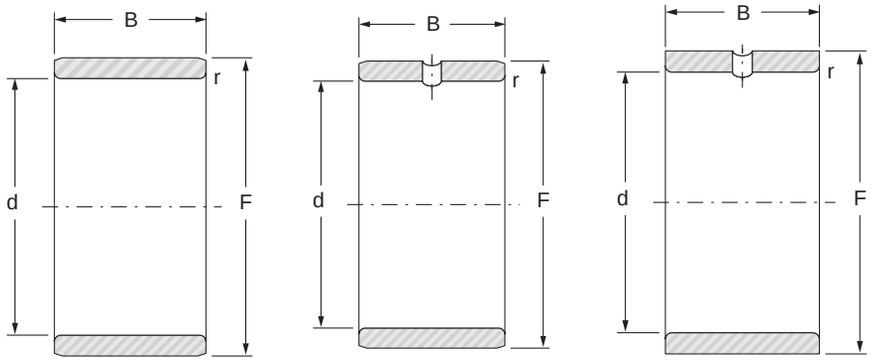

JR **JR.JS1** **JRZ.JS1**

Shaft ∅ mm	Designation	d mm	F mm	B mm	$r_{s\ min}$ mm	Weight kg
90	**JR90x100x26**	90	100	26	1	0.300
	JR90x100x30	90	100	30	1	0.350
	JR90x100x36	90	100	36	1	0.422
	JR90x105x32	90	105	32	1.1	0.580
	JR90x105x35	90	105	35	1.1	0.624
	JR90x105x63	90	105	63	1.1	1.140
95	**JR95x105x26**	95	105	26	1	0.310
	JR95x105x36	95	105	36	1	0.430
	JR95x110x35	95	110	35	1.1	0.653
	JR95x110x63	95	110	63	1.1	1.200
100	**JR100x110x30**	100	110	30	1.1	0.384
	JR100x110x40	100	110	40	1.1	0.510
	JR100x115x40	100	115	40	1.1	0.790
110	**JR110x120x30**	110	120	30	1	0.425
	JR110x125x40	110	125	40	1.1	0.870
120	**JR120x130x30**	120	130	30	1	0.460
	JR120x135x45	120	135	45	1.1	1.060
130	**JR130x145x35**	130	145	35	1.1	0.890
	JR130x150x50	130	150	50	1.5	1.730
140	**JR140x155x35**	140	155	35	1.1	0.955
	JR140x160x50	140	160	50	1.5	1.860
150	**JR150x165x40**	150	165	40	1.1	1.170
160	**JR160x175x40**	160	175	40	1.1	1.240
170	**JR170x185x45**	170	185	45	1.1	1.480
180	**JR180x195x45**	180	195	45	1.1	1.560

CYLINDRICAL INNER RINGS WITH AND WITHOUT HOLE FOR RNA BEARINGS

SUMMARY TABLE

BIC and BICG series

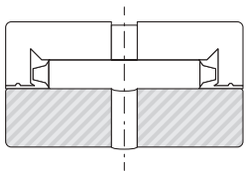

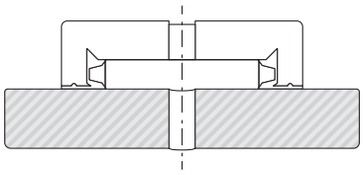

Shaft ∅ mm	Designation	d mm	F mm	B mm	r_s min mm	Weight kg
12	**BI/C 1012**	12	17.6	15	1	0.016
15	**BI/C 1015**	15	20.8	15	1	0.018
	BI/C 2015	15	22.1	22	1	0.035
17	**BI/C 1017**	17	23.9	15	1	0.026
20	**BI/C 1020**	20	28.7	18	1	0.046
	BI/C 2020	20	28.7	22	1	0.056
25	**BI/C 1025**	25	33.5	18	1	0.054
	BI/C 2025	25	33.5	22	1	0.065
	BI/C 22025	25	33.5	30	1	0.500
30	**BI/C 1030**	30	38.2	18	1	0.060
	BI/C 2030	30	38.2	22	1	0.074
	BI/C 3030	30	44.0	30	1	0.188
35	**BI/C 1035**	35	44.0	18	1	0.077
	BI/C 2035	35	44.0	22	1	0.093
40	**BI/C 1040**	40	49.7	18	1.5	0.094
	BI/C 2040	40	49.7	22	1.5	0.115
	BI/C 3040	40	55.4	36	1.5	0.321
45	**BI/C 1045**	45	55.4	18	1.5	0.113
	BI/C 2045	45	55.4	22	1.5	0.139
	BI/C 3045	45	62.1	38	1.5	0.422

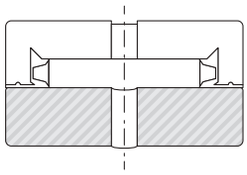

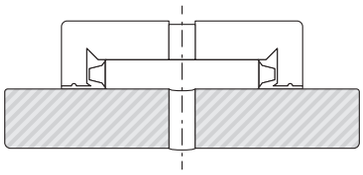

Shaft ∅ mm	Designation	d mm	F mm	B mm	r_s min mm	Weight kg
50	**BI/C 1050**	50	62.1	20	2	0.163
	BI/C 11050	50	62.1	24	2	0.196
	BI/C 2050	50	62.1	28	2	0.228
	BI/C 3050	50	68.8	38	2	0.515
55	**BI/C 1055**	55	68.8	20	2	0.205
	BI/C 3055	55	72.6	38	2	0.525
60	**BI/C 2060**	60	72.6	28	2	0.282
	BI/C 3060	60	78.3	38	2	0.583
65	**BI/C 3065**	65	83.1	38	2	0.623
70	**BI/C 3070**	70	88.0	38	2	0.662
75	**BI/C 2075**	75	88.0	32	2	0.410
80	**BI/C 1080**	80	96.0	24	2	0.410
	BI/C 2080	80	96.0	32	2	0.545
	BI/C 3080	80	99.5	38	2	0.805
90	**BI/C 2090**	90	104.7	32	2	0.531
	BI/C 3090	90	109.1	43	2	0.990
95	**BI/C 2095**	95	109.1	32	2	0.548
	BI/C 3095	95	114.7	43	2	1.075
100	**BI/C 3100**	100	119.2	43	2	1.090
105	**BI/C 2105**	105	119.2	32	2	0.615
110	**BI/C 2110**	110	124.7	34	2	0.705
130	**BI/C 3130**	130	158.0	52	2	2.530

CODE SYMBOLS
SUMMARY TABLE

CODE	DESCRIPTION	PAGE
	A	
ARZ	Roller thrust bearing with retained plate	127
AX	Needle thrust bearing	127
AXNZ	Needle thrust bearing with retained plate	127
	B	
BI	There is the inner ring BI without lubrication hole and the BIC with lubrication hole.	136
...B6	Convex outer diameter for RNA 11000 series	
BI/C	Cylindrical inner ring with and without lubrication hole for full complement needle bearings RNA series	
BK	Cylindrical inner ring with lubrication hole for RNAB seriesBK Caged needle bush, closed-end	
BK...RS	Caged needle bush, closed-end with one seal	
BR	Needle roller with round ends	
BP	Needle roller with flat ends	
	C	
...C2, C3, C4, C5	Radial play different from standard play for complete bearings with thick inner and outer ring	127
CP	Plate for needle thrust bearing, roller thrust bearing (light series) and combined bearing	127
	D	
DH	Sealing rings	157
DL	Full complement needle bush, open	45
DLF	Full complement needle bush, closed-end	45
	E	
...EE	Seal incorporated on two sides	
...EEM	Metal seals incorporated on two sides	
	F	
FG	Needle cam follower with convex outer ring	93
FGL	Needle cam follower FG with cylindrical outer ring	93
FG...EE	Needle cam follower with convex outer ring with two seals	93
FGL...EE	Needle cam follower FG with cylindrical outer ring with two seals	93
FG...EEM	Needle cam follower with convex outer ring with two metallic shields	93
FGL...EEM	Needle cam follower FG with cylindrical outer ring with two metallic shields	93
FGU	Full complement roller cam follower with convex outer ring	93
FGU...MM	Full complement roller cam follower with convex outer ring and metallic shields	93
FGUL	Full complement roller cam follower with cylindrical outer ring	93
FGUL...MM	Full complement roller cam follower with cylindrical outer ring and metallic shields	93
FP	Small needle cam follower with convex outer ring	93
FPL	Small needle cam follower with cylindrical outer ring	

CODE	DESCRIPTION	PAGE
	G	
GC	Needle cam follower with stud, convex outer ring	93
GC..EE	Needle cam follower with stud, convex outer ring with two seals	93
GCL	Needle cam follower with stud, cylindrical outer ring	93
GCL...EE	Needle cam follower with stud, cylindrical outer ring with two seals	93
GC...EEM	Needle cam follower with stud, convex outer ring with two metallic shields	93
GCL...EEM	Needle cam follower with stud, cylindrical outer ring with two metallic shields	93
GCR	Needle cam follower with eccentric stud, convex outer ring	93
GCR...EE	Needle cam follower GC...EE with eccentric stud	93
GCRL	Needle cam follower with eccentric stud and cylindrical outer ring	93
GCRL...EE	Needle cam follower GCL..EE with eccentric stud	93
GCR...EEM	Needle cam follower GC...EEM with eccentric stud	93
GCRL...EEM	Needle cam follower CGL...EEM with eccentric stud	93
GCU	Roller cam follower with stud, convex outer ring	93
GCUL	Roller cam follower with cylindrical outer ring	
GCUR	Roller cam follower with eccentric stud, convex outer ring	
GCURL	Roller cam follower with eccentric stud, cylindrical outer ring	
	H	
HK	Caged needle bush, open, according to ISO tolerances	45
HK...RS	Caged needle bush, open, with one seal	45
HK...2RS	Caged needle bush, open, with two seals	45
	J	
JR	Inner ring for bushes and bearings without lubrication hole	173
JR...JS1	Inner ring for bushes and bearings with lubrication hole	173
JRZ...JS1	Inner ring for bushes and bearings with lubrication hole, without chamfer on the raceway. Radial clearance other than standard for complete bearings with thick inner and outer ring.	173 173
	N	
NA	Full complement needle bearings with inner ring	81
NK	Caged needle bearings without inner ring	81
NKS	Caged needle bearings without inner ring	81
NKJ	Caged needle bearings with inner ring	81
NKJS	Caged needle bearings with inner ring	81
	P	
...P6, P5, P4	Precision tolerance codes for thick inner and outer ring	173
	K	
K	Needle cage with single row	27
K...ZW	Neddle cage with double-row	27
K...TN	Molded cage of reinforced engineered polymer, with single-row	27

CODE SYMBOLS
SUMMARY TABLE

CODE	DESCRIPTION	PAGE
	R	
...R6	Convex inner ring raceway	141
RAX 400	Needle combined bearing with needle thrust cage	141
RAX 700	Needle combined bearing with thin outer ring, open	141
RAXF 700	Needle combined bearing with thin outer ring, closed end	141
RNA	Full complement needle bearing without inner ring	141
RNAB	Cam follower 11.000 series, convex outer diameter greater than B6	141
RNA...B6	Cam follower 11.000 series, convex outer diameter	141
RNAL	Cam follower 11.000 series, cylindrical outer diameter	
...RS	Seals for needle bushes HK and BK	
	T	
...TB	Radial play or diameter under needle selected from lower half of standards tolerance	184
...TC	Radial play or diameter under needle selected from upper half of standards tolerance	184
...TN	Molded cage of reinforced enineered polymer	184

BIBUS

BIBUS SK, s.r.o
Trnavská 31, SK-94 901 Nitra

Tel.: 037/ 7777 911 Email: sale@bibus.sk
Fax.: 037/ 7777 999 http://www.bibus.sk

Our customers' satisfaction is the basis for our success and growth.
That is why we are at your service around the world and always keep your requirements as a priority.

We have a worldwide network of sales engineers and distributors in Europe, Asia and the USA.
This allows us to ensure customer-oriented solutions and best in class delivery and service.

WORLDWIDE NETWORK

BRANCHES AND CONTACTS

NADELLA S.r.l.
Italy

Via Melette, 16
20128 Milano
Tel.: +39 02 27 093
Fax: +39 02 257 64 79
customer.service@nadella.it
www.nadella.it

NADELLA GmbH
Germany

Rudolf-Diesel-Str. 28
71154 Nufringen
Tel.: +49 7032 9540-0
Fax: +49 7032 9540-25
info@nadella.de
www.nadella.de

NADELLA Inc.
United States

14115 – 63 Way North
Clearwater – Florida 33760-3621
Tel.: +1 844-537-0330 (toll-free)
Fax: +1 844-537-0331
info@nadella.com
www.nadella.com

NADELLA Linear Shanghai Co. Ltd. – China

F4, Bld5, No.2388 Chen-hang Road
Shanghai 201114
Tel.: +86 21 5068 3835
Fax: +86 21 5038 7725
info@nadellamotion.com
www.nadellamotion.com

NADELLA France
France

12 Parvis Colonel Arnaud Beltrame
Hall A 4ème étage
78000 Versailles
Tel.: +33 (0)1 7319 4048
service.client@nadella.fr
www.nadella.fr

NADELLA Poland
Poland

Tel: +48 666 874 460
sales.pl@nadella.eu
www.nadella.com

NADELLA S.A.
Spain

Polígono Industrial Erratzu
Parcela G3. Pabellón 221 - Apdo.65
E-20130 Urnieta - Gipuzkoa
Tel. +34 943 336 370
ventas@nadella.es
www.nadella.com

DURBAL Metallwarenfabrik GmbH - Germany

Verrenberger Weg 2
74613 Öhringen
Tel.: +49 7941 9460-0
Fax: +49 7941 9460-90
info@durbal.de
www.durbal.de

CHIAVETTE UNIFICATE S.r.l.
Italy

Via G.Brodolini 6-8-10
40069 Zola Predosa, Bologna
Tel.: +39 051 75 87 67
Fax: +39 051 75 47 80
tescubal@chiavette.it
www.chiavette.com

SHUTON S.A.
Spain

Polígono Industrial Goian
C/Subinoa, 5 - 01170 LEGUTIANO
Tel.: +34 945 465 629
Fax: +34 945 465 610
shuton@shuton.com
www.shuton.com

HUSILLOS IPIRANGA
Spain

Polígono Industrial Erratzu
Parcela G3. Pabellón 221 - Apdo.65
E-20130 Urnieta - Gipuzkoa
Tel. +34 943 336 370
info@ipirangahusillos.com
www.ipirangahusillos.com

NADELLA UK
UK and Ireland

Tel: +44 7901 214 918
sales.uk@nadella.eu
www.nadella.com

DISTRIBUTOR COVERAGE

Austria	China	France	India	Korea	Portugal	Slovakia	Switzerland
Belgium	Czech Republic	Germany	Ireland	Netherlands	Romania	Slovenia	Taiwan
Brazil	Denmark	Great Britain	Israel	Norway	Russia	Spain	Turkey
Canada	Finland	Hungary	Italy	Poland	Singapore	Sweden	United States

WWW.NADELLA.COM