Partner for Performance

RINGFEDER

# Elastomer Jaw Couplings

RINGFEDER® GWE

RINGFEDER® TNM

RINGFEDER® TNS

RINGFEDER® TNB

EN 11.2024

## Product Paper & Tech Paper

100 YEARS EMPOWERING TOMORROW SINCE 1922

Machine Building

Aviation & Aerospace

Process Technology

# Welcome

## Your System Partner for Drive and Damping Technology

We say what we mean and mean what we say.

We see things from our customers' perspective.

We are considerate of our employees and their families as well as of our environment and society.

Movement

Energy

Extraction

RINGFEDER POWER TRANSMISSION is the international market leader in niche markets for drive and damping technology. We develop, manufacture and supply superior Shaft-Hub Connections, Damping Components, Couplings, Brake Systems and Bearing Housings for highest functionality and durability requirements in a wide range of technology sectors worldwide. Not only do we always provide our ambitious customers with competent advice based on over 100 years of experience and expertise, but also realize need-based, application-oriented solutions together with them that guarantee safe, failure-free and economic machine and plant operation – with our aspiration to be **Partner for Performance**.

## Our customer promise for your specific use case:

- Excellent know-how for maximum performance and reliability
- Best cost-benefit ratio
- Short reaction times and high product availability

## Quality & Expertise

One century of competence and experience

As pioneer and market leader for premium systems and components of drive and damping technology, we stand for outstanding professional competence, superior product and service quality as well as excellent customer focus. For your advantage, we consistently combine highest quality standards, continuous optimization and profound consulting – no matter how, where and when forces must be transmitted or damped.

## Reliability & Trust

From the requirement to the optimum result

Whether customized special design or proven standard type, highly specific individual or holistic system solution: As a competent, professional and service-oriented partner, we support and accompany you from the initial clarification of your requirements to the successful completion of your purpose – and, of course, also beyond.

# Your Projects, Our Drive

## Anytime & Anywhere

Locally on-site for you worldwide

Thanks to national and international development, manufacturing and sales locations as well as a worldwide service and partner network, we are at your side around the globe directly and locally with qualified technical support and fast product availability – around the clock, seven days a week, of course also and particularly in urgent maintenance and repair cases.

## Digital & Online

Always find the right information instantly

Discover the latest company and product information, download CAD models, brochures and data sheets, use our calculation and selection program for shaft-hub connections, arrange a video consultation appointment with one of our specialists and much more – quickly, easily, with no obligation and at any time. Convince yourself on our website at www.ringfeder.com.

# RINGFEDER®
# Elastomer Jaw Couplings

| Elastomer Jaw Couplings | RINGFEDER® GWE | RINGFEDER® TNM | RINGFEDER® TNS | RINGFEDER® TNB |
|---|---|---|---|---|
| Torque | 0,3 – 1920 Nm | 13 – 41000 Nm | 4 – 13350 Nm | 1000 – 260000 Nm |
| Torsionally flexible | ● | ● | ● | ● |
| Puncture-proof | ● | ● | ● | ● |
| Backlash-free | ● | | | |
| Compensation of misalignments *(axial, radial, angular)* | ● | ● | ● | ● |
| Axially pluggable | ● | ● | ● | ● |
| Low-maintenance | ● | | | |
| Temperature range | -30 °C to +100 °C | -30 °C to +100 °C | -30 °C to +100 °C | -30 °C to +100 °C |

# Introduction

The rotationally resilient couplings of the RINGFEDER® series GWE, TNM, TNS und TNB are puncture-proof and flexible in all directions and therefore compensate for angular, parallel and axial shaft misalignments of the connected machines. Misalignments can be caused for example by inaccurate assembly, heat movements or settling phenomena.

## Avoiding torsional vibration

By virtue of the rotational resilience of the coupling, dangerous torsional vibrations from the operational range of plant machinery can be transfer to rotational speed ranges in which no negative effects are to be expected. Material damping of the elastic parts contributes to limiting the resonance peaks when passing risky revolution ranges and thus offers the protection of coupled machines from damage. The damping of the couplings also alleviates torque shocks and has a calming effect on the activated oscillatory system The transmission of structure-bound noise is reduced.

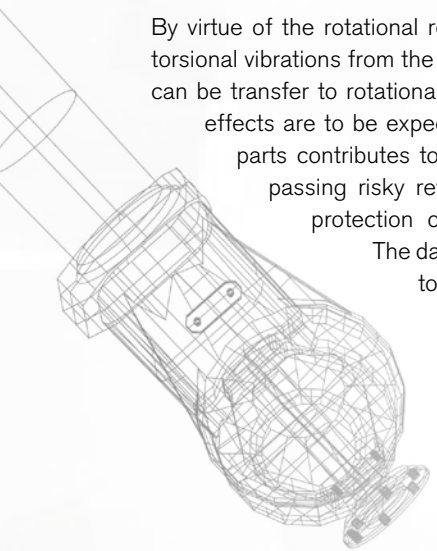

## Environmental conditions

The employed elastomer materials operate reliably in ambient temperature ranges of -30 °C to +100 °C. Materials are available for higher and lower temperatures on request. The influence of the temperature on the coupling size selection is explained in more detail in the below-mentioned design directives.

The coupling should only be operated in normal industrial air. Aggressive media may attack the coupling components, bolts and elastic elements and therefore present a danger to the operational safety of the coupling.

### Maximum Safety in Explosion-Endangered Areas

RINGFEDER® Elastomer Jaw Couplings can of course be delivered in compliance with ATEX according to Product Directive 2014/34/EU and DIN EN ISO 80079-36:2016 if required.

| Elastomer Jaw Couplings | RINGFEDER® GWE | RINGFEDER® TNM* | RINGFEDER® TNS | RINGFEDER® TNB |
|---|---|---|---|---|
| **Elastic parts** | **Spider** | **Intermediate rings** | **Intermediate rings** | **Buffer** |
| **Material** | **Polyurethan (blue)**<br>Hardness: 80 SH A<br>**Polyurethan (yellow)**<br>Hardness: 92 SH A<br>**Polyurethan (red)**<br>Hardness: 95/98 SH A<br>**Hytrel (green)**<br>Hardness: 64 SH D-H<br>**Polyurethan (green)**<br>Hardness: 64 SH D | **Perbunan (Pb72) (black)**<br>Basic material: NB<br>Nitrile butadiene rubber<br>Hardness: 72 Shore A<br>**Perbunan (Pb82) (black)**<br>Basic material: NB<br>Nitrile butadiene rubber<br>Hardness: 82 Shore A | **Perbunan (Pb72)**<br>Basic material: NB<br>Nitrile butadiene rubber<br>Hardness: 72 Shore A<br>**Perbunan (Pb82)**<br>Basic material: NB<br>Nitrile butadiene rubber<br>Hardness: 82 Shore A<br>**Vulkollan VkR (rot)**<br>Casting polyurethane<br>Hardness: 93 Shore A<br>**Vulkollan Vk60D (white)**<br>Casting polyurethane<br>Hardness: 60 Shore D | **Perbunan (Pb82)**<br>Basic material: NB<br>Nitrile butadiene rubber<br>Hardness: 82 Shore A<br>**Vulkollan VkR (red)**<br>Casting polyurethane<br>Hardness: 93 Shore A<br>**Vulkollan VkW (white)**<br>Casting polyurethane<br>Hardness: 96 Shore A |

**Disclaimer of liability**
All technical details and notes are non-binding and cannot be used as a basis for legal claims. The user is obligated to determine whether the represented products meet his requirements.

We reserve the right carry out modifications at any time in the interests of technical progress.

| Drive side | Min. load factor $S_A$ |
|---|---|
| **E-Motor, turbine** | 1 |
| **Hydraulic motor** | 1,1 |
| **Combustion machine 4 and more cylinders, U-degrees ≤ 1:100** | 1,2 (TVA)* |
| **Combustion machine 1 to 3 cylinders, U-degree > 1:100** | 1,4 (TVA)* |

$S_A$ = Load factor of drive side: * We recommend for drivers with combustion machines to examine by a „TVA“ - torsiona vibration calculation which coupling is suitable for the application.

| Torque characteristics at operating point on outputside | Torque characteristics | Minimum load factor $S_L$ |
|---|---|---|
| **Constant, uniform without torque variation** | a) T (Nm) t (sec) | **1** |
| **Uniform with little variations, slight shocks** | b) T (Nm) t (sec) | **1,25** |
| **Non-uniform, also API-671, API-610 moderate shocks** | c) T (Nm) t (sec) | **1,5** |
| **Non-uniform, fluctuant, heavy shocks** | d) T (Nm) t (sec) | **1,75** |
| **Other torque characteristics** | | **Own specification/ personal vibration calculation** |

$S_L$ = Load factor of output side

| Ambient temperature range [°C] | Temperature factor $S_\vartheta$ for elastic parts | | |
|---|---|---|---|
| | RINGFEDER® GWE | RINGFEDER® TNM, TNS, TNB | |
| | **PUR, Hytrel [1]** | **VkR, VkW, Vk60D** | **Pb72, Pb82 (NBR)** |
| -30 < ϑ < +30 | 1 | 1 | 1 |
| +30 < ϑ < +40 | 1,2 | 1,2 | 1 |
| +40 < ϑ < +60 | 1,4 | 1,4 | 1 |
| +60 < ϑ < +80 | 1,8 | 1,8 | 1,2 |
| +80 < ϑ < +100 | 2 | - | 1,3 |
| +100 < ϑ < +120 | 2,4 | - | - |

$S_\vartheta$ = Temperature factor depending on elastic materials. The elastic material may not be used in temperature ranges marked with a dash (-).

[1] The maximum permissible ambient temperature in the chapter 'Technical description (Jaw Couplings RINGFEDER® GWE)' must be strictly observed.

# Dimensioning of coupling

The dimensioning of the elastic RINGFEDER® couplings is based on the nominal torque $T_N$ and maximum impact torque $T_{max}$ of the machines.

**Equation 1)**

$$T_N = 9550 \cdot P_N / n_N$$

| | | | |
|---|---|---|---|
| $T_N$ | = | Nominal torque of machine | [Nm] |
| $P_N$ | = | Machine power | [kW] |
| $n_N$ | = | Operating speed | [$min^{-1}$] |

## The following equation applies when subjected to the nominal torque:

**Equation 2)**

$$T_{KN} > T_N \cdot S_\vartheta \cdot S_f$$

| | | | | |
|---|---|---|---|---|
| $T_{KN}$ | = | Nominal torque of coupling | [Nm] | acc. to Paper data |
| $T_N$ | = | Nominal torque of machine | [Nm] | acc. to equation 1) |
| $S_\vartheta$ | = | Temperature factor | [-] | acc. to table |
| $S_f$ | = | Service factor | [-] | $S_A \cdot S_L$ |
| $S_A$ | = | Load factor of drive side | | |
| $S_L$ | = | Load factor of output sidee | | |

## Verifying the maximum torque of the coupling

The following equation applies for transient impact torques, which occur e.g. by starting an electric motor

**Equation 3)**

$$T_{Kmax} > T_{max} \cdot S_\vartheta \cdot S_Z$$

| | | | | |
|---|---|---|---|---|
| $T_{Kmax}$ | = | Maximum torque of the coupling | [Nm] | acc. to Paper data |
| $T_{max}$ | = | Maximum impact torque of machine * | [Nm] | |

* e.g. when starting an electric motor: $T_{max} = T_{Kipp}$

$T_{Kipp}$ = Tipping torque by starting with directly engaged asynchronous motor e.g. $T_{Kipp} \sim 2{,}5 \cdot T$; observe details of motor producer

| Start-ups per hour [1/h] | Start-up factor $S_Z$ |
|---|---|
| < 120 | 1 |
| 120 - 240 | 1,3 |
| >240 | On request |

$S_Z$ = Start-up factor

## Check selected coupling size

■ Check whether the **hub bore** is able to accommodate the shaft diameters. The values of the maximum finish bores stated in the tables are applicable for keyed connections according to DIN 6885/1 and must not be exceeded.

■ Check the power transmission capability of the **shaft-hub-connection**. The nominal torques stated in the tables will be reliably transmitted by the couplings. The introduction of the torque into the coupling hub has to be verified by the user of the coupling according to recognized rules of technology. If necessary, the second key is to be offset by 180°.

■ Please take into account the **maximum permissible speed** of the coupling. For coupling versions to bridge large separations between shafts, for example in RINGFEDER® GWE Z5104.1 and GWE Z5106.1 the critical bending speed must be tested or we must be commissioned with carrying out this test.

■ Check whether **balancing** is necessary. We advise to balance the coupling parts or sub assemblies if the circum ferential speed at the outer diameter exceeds 22 m/s. Balancing can only be performed on couplings with finish-bores. Unless otherwise specified, the half key convention applies so that the hubs are balanced in accordance with DIN ISO 21940-11 Quality 6.3 for 1500 1/min before grooving.

# Dimensioning example

Example for dimensioning a coupling for a pump drive with electric motor type IEC 355.

**Preselected type:**
RINGFEDER® TNB BHDD*

| | | |
|---|---|---|
| Input power $\mathbf{P_N}$ = | 355 kW | |
| Operating speed $\mathbf{n_N}$ = | 1480 $min^{-1}$ | |
| Nominal torque $\mathbf{T_N}$ = | $9550 \cdot P_N / n = 9550 \cdot 355 / 1480 = 2291$ Nm | acc. to equation 1) |
| Ambient temperature $\vartheta$ = | 65 °C | |
| → Temperature factor $\mathbf{S_\vartheta}$ = | 1,8 | für VkR |
| Load factor | | |
| Drive motor | Directly engaged asynchronous motor (Δ-connection) | |
| → Load factor of drive side $\mathbf{S_A}$ = | 1 | |
| Working machine | Centrifugal pump | Torque characteristics uniform with little variations |
| → Load factor of output side $\mathbf{S_L}$ = | 1,25 | |
| Required nominal torque of the coupling $\mathbf{T_{KN}}$ > | $T_N \cdot S_\vartheta \cdot S_f = 2291$ Nm $\cdot$ 1,8 $\cdot$ 1,25 = 5155 Nm | acc. to equation 2) |

Following the catalogue data the coupling is selected with a coupling size of BHDD 300 with intermediate ring VkR and a nominal coupling torque of 6000 Nm. The dimension of coupling RINGFEDER® BHDD 300 is OK for the performance data.

The operating speed of 1480 rpm results in a circumferential speed of 23.2 m/s. Therefore it is recommended to balance the coupling parts. If the shaft-hub connections are dimensioned sufficiently, this coupling can be used.

## Verifying the maximum torque of the coupling

| | | |
|---|---|---|
| Maximum torque $\mathbf{T_{max}}$ = $\mathbf{T_{max}}$ = $\mathbf{T_{Kipp}}$ = Tipping torque when starting with directly engaged asynchronous motors | $2{,}5 \cdot T_N = 2{,}5 \cdot 2291$ Nm = 5727,5 Nm | |
| Ambient temperature $\vartheta$ = | 65 °C | |
| → Temperature factor $\mathbf{S_\vartheta}$ = | 1,8 | für VkR |
| Starts per hour | 6 | |
| → Start-up factor $S_Z$ = | 1 | für VkR |
| Required maximum torque of the coupling $\mathbf{T_{Kmax}}$ > | $T_{max} \cdot S_\vartheta \cdot S_Z = 5727{,}5$ Nm $\cdot$ 1,8 $\cdot$ 1 = 10310 Nm | acc. to equation 3) |

## Verifying the dimensioning result

| Value | System data | Coupling data TNB BHDD 300 VkR |
|---|---|---|
| **Nominal torque** | 5155 Nm (excl. safety factor) | 6000 Nm |
| **Maximum torque** | 10310 Nm (excl. safety factor) | 17500 Nm |
| **Speed** | 1480 $min^{-1}$ | max. 2500 $min^{-1}$ |
| **Shaft diameter motor** | 95 mm | max. 120 mm |
| **Shaft diameter pump** | 85 mm | max. 120 mm |

* **Note:** The exemplary procedure for coupling design shown applies to all Elastomer Jaw Couplings of the RINGFEDER® GWE, TNM, TNS and TNB series.

# Technical installation instructions

## Arrangement of the coupling parts

The arrangement of the coupling hubs on the shaft ends that are to be connected is free in principle. For couplings with attachment parts such as brake discs and drums these should be attached to the drive side that is to be locked. The hubs must be placed flush with the shaft end in order to make the shaft-hub connection stable.

## Finished bore

The given values for the maximum finished bore may not be exceeded. A press fit or slightly tight fit are recommended in order to achieve good concentricity for the couplings in series TNM, TNS and TNB. For the GWE series please select a slight clearance fit or a press fit. Where there is no specification the finished bore is executed with a tolerance of H7.

## Fastening on a shaft

RINGFEDER® GWE couplings transmit the torque to the shaft by clamping or keyway in accordance with DIN 6885/1 depending on the design. The couplings RINGFEDER® TNM, TNS and TNB are executed as standard with keyways. An axial fastening should also be included, such as a set screw and spacer rings on longer shaft ends. The key must be axially fixed in the shaft.

## Observe restoring forces

The coupling compensates the permissible misalignments with low restoring forces. Please observe the alignment values specified in the assembly and operation manual. If highly loaded bearings are involved, the additional loads resulting from the restoring forces should be taken into consideration. In such cases, please contact RINGFEDER POWER TRANSMISSION for more detailed information.

## Shaft end bearings

The shaft ends to be coupled should be supported by bearings which are directly fitted in front and after the coupling.

**Attention!**
In the interest of further development, we reserve the right to make changes which serve technological progress. Carefully observe the actually instructions given in the relevant installation and operation manual, which can be downloaded from our webpage **www.ringfeder.com**.

# GWE

# Elastomer Jaw Couplings

## Backlash-free Elastomer Jaw Couplings RINGFEDER® GWE

Backlash-free RINGFEDER® GWE jaw couplings are used in engineering where high positioning precision requires vibration damping in greatly accelerated processes and the use of plug-in coupling solutions is preferred.

## Characteristics · Advantages

- Backlash-free, through pre-stressing
- Pluggable
- Vibration damping
- Torques from 0,5 – 650 Nm
- Compensation of radial, axial and angular misalignment
- Electrically isolating

## Applications

- Encoder
- Precision drives
- Feed drives
- Grinding and milling spindles
- Machine tools
- Packing machines
- Robotics
- Transfer lines
- Multi-spindle heads
- Wood processing equipment
- Textile machinery
- Conveying equipment
- Linear motion
- Measuring equipment and control technology
- Test rigs

# Technical description

Every hub on the RINGFEDER® GWE jaw coupling has concave jaws on its face. The function of the coupling to transmit torque and damp impact that occurs, as well as balancing out unavoidable misalignments, is enabled through the joining of two hubs and the filling of the created free space with an elastic sprocket. The GWE jaw couplings are backlash-free in order to also achieve a high level of positioning precision in reverse operation. The coupling is backlash-free as a result of the pressure pre-tensioning of the individual buffers in the elastomer sprocket. The different Shore hardness levels, which correlate to the torsional stiffness, mean that it is possible to optimise the entire drive line from the point of view of rotary oscillation. Detailed information is included in the technical data for the sprockets.

| Spider Hardness (Shore) | Colour | Material | Allowable temperature °C | | Available for size | Typical applications; preferred characteristics |
|---|---|---|---|---|---|---|
| | | | Continous temperature | Max. temp. short term | | |
| 80 SH A | blue | Polyurethane | -50 to +80 | -60 to +120 | 5-19 | Drives in electronic measuring systems; backlash-free when pre-compressed |
| 92 SH A | yellow | Polyurethane | -40 to +90 | -50 to +120 | 5-55 | Main spindle drives; backlash-free when pre-compressed |
| *95/98 SH A | red | Polyurethane | -30 to +90 | -40 to +120 | 5-75 | Positioning drives; backlash-free when pre-compressed |
| 64 SH D-H | green | Hytrel | -50 to +120 | -60 to +150 | 7-38 | Machine tool spindles, control drives, lead units, planetary gearboxes; heavy loads, torsionally stiff, high ambient temperature, water proof |
| 64 SH D | green | Polyurethane | -20 to +110 | -30 to +120 | 42-75 | |

* From size 65 ≙ 95 SH A

**Type elastomeric spider**

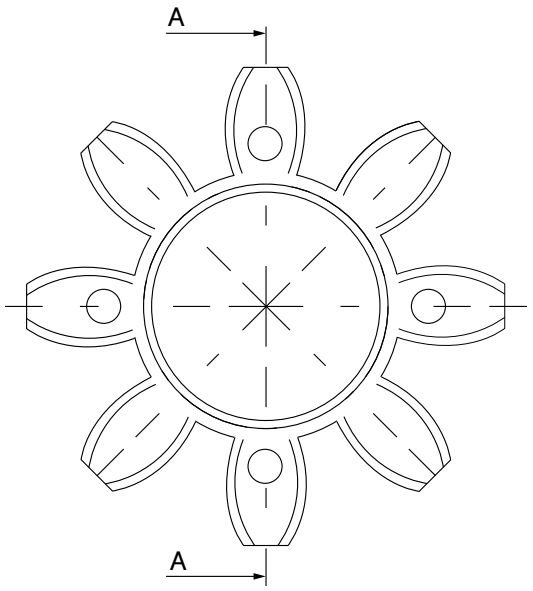


**Standard**

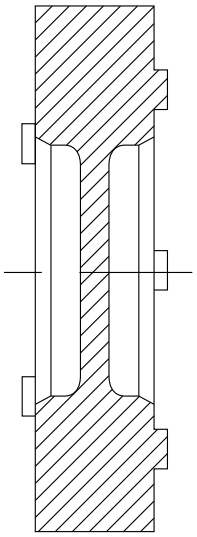

**Optional with through bore hole $d_{bZ}$**
*(see table „Technical data of the spider“)*

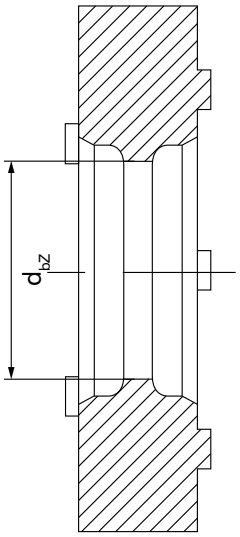

**$T_{KN}$ – Nominal torque of coupling (Nm):**
Continuous torque which can be transmitted throughout the entire speed range, taking into consideration operational factors such as ambient temperature, operating, impact and start-up factors.

**$T_{Kmax}$ – Maximum torque of coupling (Nm):**
Torque which can be transmitted $>10^5$ time as a peak load or $5 \times 10^4$ times as an alternating load during the entire life of the coupling taking into consideration factors such as temperatures, torsional stiffness and shock loading.

The shaft-hub connection must be tested by the customer.

The stated static torsional stiffness $\mathbf{C_{Tstat}}$ and dynamic torsional stiffness $\mathbf{C_{Tdyn}}$ are valid for 0.5 $T_{KN}$.

The axial misalignment $\mathbf{K_a}$ refers to the gap size shown in the data sheets.

## Technical data of the spider

| Size | SH | 1/min $n_{max}$ (5102) | (5113) | (5103.1) | (5104) | (5112) | Nm $T_N$ | $T_{max}$ | Nm/rad $C_{Tstat}$ | Nm/rad $C_{Tdyn}$ | N/mm $C_r$ | mm optional $d_{bZ}$* | $\Delta K_a$ | $\Delta K_r$ | Degree $\Delta K_w$ |
|---|---|---|---|---|---|---|---|---|---|---|---|---|---|---|---|
| 5 | 80 SH A | 47500 | --- | 38000 | --- | --- | 0,3 | 0,6 | 3,2 | 10 | 82 | --- | +0,4/-0,2 | 0,12 | 1,1 |
| | 92 SH A | | | | | | 0,5 | 1,0 | 5,2 | 16 | 154 | | | 0,06 | 1,0 |
| | 98 SH A | | | | | | 0,9 | 1,7 | 8,3 | 25 | 296 | | | 0,04 | 0,9 |
| 7 | 64 SH D-H | 34000 | --- | 27000 | --- | --- | 2,4 | 4,8 | 34 | 103 | 630 | --- | +0,6/-0,3 | 0,04 | 0,8 |
| | 80 SH A | | | | | | 0,7 | 1,4 | 8,6 | 26 | 114 | | | 0,15 | 1,1 |
| | 92 SH A | | | | | | 1,2 | 2,4 | 14,3 | 43 | 219 | | | 0,1 | 1,0 |
| | 98 SH A | | | | | | 2,0 | 4,0 | 23 | 69 | 421 | | | 0,06 | 0,9 |
| 9 | 64 SH D-H | 24000 | --- | 19000 | --- | --- | 6 | 12 | 74 | 224 | 769 | 6,5 | +0,8/-0,4 | 0,05 | 0,8 |
| | 80 SH A | | | | | | 1,8 | 3,6 | 17 | 52 | 125 | | | 0,19 | 1,1 |
| | 92 SH A | | | | | | 3 | 6 | 31 | 95 | 262 | | | 0,13 | 1,0 |
| | 98 SH A | | | | | | 5 | 10 | 51 | 155 | 518 | | | 0,08 | 0,9 |
| 12 | 64 SH D-H | 19000 | 15000 | --- | --- | --- | 12 | 24 | 328 | 982 | 1198 | 7,5 | +0,9/-0,4 | 0,05 | 0,8 |
| | 80 SH A | | | | | | 3 | 6 | 84 | 252 | 274 | | | 0,2 | 1,1 |
| | 92 SH A | | | | | | 5 | 10 | 160 | 482 | 470 | | | 0,14 | 1,0 |
| | 98 SH A | | | | | | 9 | 18 | 241 | 718 | 846 | | | 0,08 | 0,9 |
| 14 | 64 SH D-H | 16000 | 13000 | --- | 13000 | 25400 | 16 | 32 | 234 | 702 | 856 | 8,5 | +1,0/-0,5 | 0,06 | 0,8 |
| | 80 SH A | | | | | | 4 | 8 | 60 | 180 | 153 | | | 0,21 | 1,1 |
| | 92 SH A | | | | | | 7,5 | 15 | 115 | 344 | 336 | | | 0,15 | 1,0 |
| | 98 SH A | | | | | | 12,5 | 25 | 172 | 513 | 654 | | | 0,09 | 0,9 |
| 19 | 64 SH D-H | 12000 | 10000 | --- | 10000 | 19000 | 21 | 42 | 1240 | 3720 | 2930 | 16 | +1,2/-0,5 | 0,04 | 0,8 |
| | 80 SH A | | | | | | 5 | 10 | 340 | 1030 | 582 | | | 0,15 | 1,1 |
| | 92 SH A | | | | | | 10 | 20 | 570 | 1720 | 1120 | | | 0,1 | 1,0 |
| | 98 SH A | | | | | | 17 | 34 | 860 | 2580 | 2010 | | | 0,06 | 0,9 |
| 24 | 64 SH D-H | 8500 | 7000 | --- | 7000 | 13800 | 75 | 150 | 2980 | 8934 | 3696 | 24 | +1,4/-0,5 | 0,07 | 0,8 |
| | 92 SH A | | | | | | 35 | 70 | 1430 | 4296 | 1480 | | | 0,14 | 1,0 |
| | 98 SH A | | | | | | 60 | 120 | 2060 | 6189 | 2560 | | | 0,1 | 0,9 |
| 28 | 64 SH D-H | 7300 | 6000 | --- | 6000 | 11700 | 200 | 400 | 4350 | 13050 | 4348 | 27 | +1,5/-0,7 | 0,08 | 0,8 |
| | 92 SH A | | | | | | 95 | 190 | 2290 | 6876 | 1780 | | | 0,15 | 1,0 |
| | 98 SH A | | | | | | 160 | 320 | 3440 | 10314 | 3200 | | | 0,11 | 0,9 |
| 38 | 64 SH D-H | 5900 | 5000 | --- | 5000 | 9550 | 405 | 810 | 10540 | 31620 | 6474 | 35 | +1,8/-0,7 | 0,09 | 0,8 |
| | 92 SH A | | | | | | 190 | 380 | 4580 | 13752 | 2350 | | | 0,17 | 1,0 |
| | 98 SH A | | | | | | 325 | 650 | 7160 | 21486 | 4400 | | | 0,12 | 0,9 |
| 42 | 64 SH D | --- | 4000 | --- | 4000 | 8050 | 560 | 1120 | 27580 | 71700 | 7270 | 42 | +2,0/-1,0 | 0,1 | 0,8 |
| | 92 SH A | | | | | | 265 | 530 | 6300 | 24300 | 2430 | | | 0,19 | 1,0 |
| | 98 SH A | | | | | | 450 | 900 | 19200 | 48000 | 5930 | | | 0,14 | 0,9 |
| 48 | 64 SH D | --- | --- | --- | 3600 | 7200 | 655 | 1310 | 36200 | 90500 | 8274 | 46 | +2,1/-1,0 | 0,11 | 0,8 |
| | 92 SH A | | | | | | 310 | 620 | 7850 | 18055 | 2580 | | | 0,23 | 1,0 |
| | 98 SH A | | | | | | 525 | 1050 | 22370 | 55925 | 5930 | | | 0,16 | 0,9 |
| 55 | 64 SH D | --- | --- | --- | 3150 | --- | 825 | 1650 | 105730 | 130200 | 9248 | --- | +2,2/-1,0 | 0,12 | 0,8 |
| | 92 SH A | | | | | | 410 | 820 | 15482 | 21375 | 2980 | | | 0,24 | 1,0 |
| | 98 SH A | | | | | | 685 | 1370 | 42117 | 61550 | 6686 | | | 0,17 | 0,9 |
| 65 | 64 SH D | --- | --- | --- | 2800 | --- | 1175 | 2350 | 118510 | 189189 | 8870 | --- | +2,6/-1,0 | 0,13 | 0,8 |
| | 98 SH A | | | | | | 940 | 1880 | 485200 | 71660 | 6418 | | | 0,18 | 0,9 |
| 75 | 64 SH D | --- | --- | --- | 2350 | --- | 2400 | 4800 | 182320 | 316377 | 11923 | --- | +3,0/-1,5 | 0,15 | 0,8 |
| | 98 SH A | | | | | | 1920 | 3840 | 79150 | 150450 | 8650 | | | 0,21 | 0,9 |

*$d_{bZ}$ = Inner diameter elastomeric spider

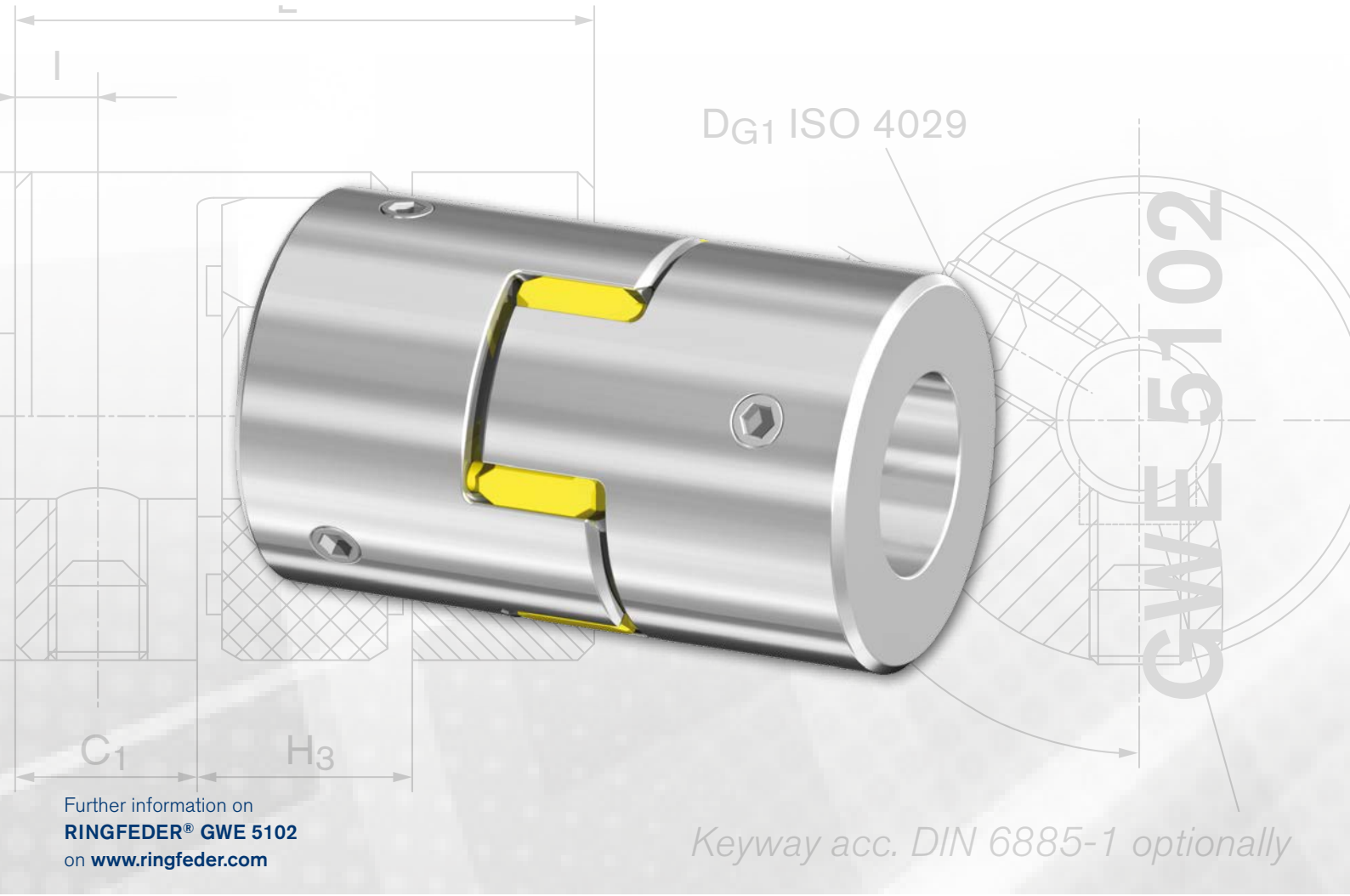


Further information on
**RINGFEDER® GWE 5102**
on **www.ringfeder.com**

## Miniature coupling with set screw hubs

**RINGFEDER® GWE 5102** is a compact miniature coupling and the solution for low torque and narrow installation spaces. The coupling halves are fixed to the shaft with threaded pins rather than with clamping hubs. The shaft tolerance should lie within the fitting tolerance 'g6' to 'h7'. Two threaded pins offset by 120° produce the contact pressure between the coupling hub and the shaft that is necessary to transmit the torque.

The elastomer spiders are available in different Shore hardness levels. Whichever version you choose: RINGFEDER® GWE 5102 miniature is electrically insulating and vibration damping.

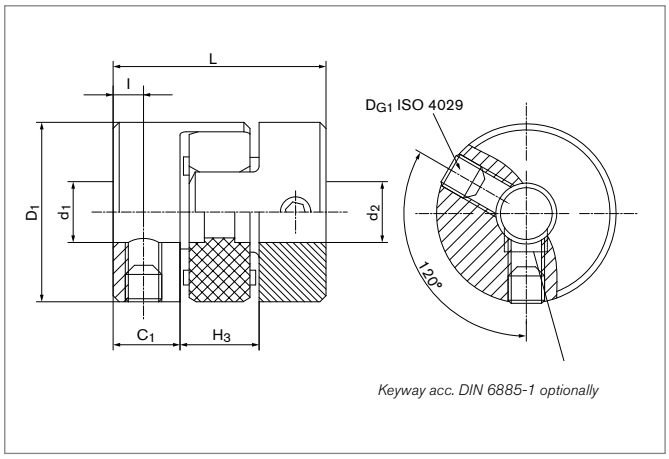


### Characteristics

- Low mass through aluminium hubs
- Optimisation of the vibration damping through different elastomer spider hardness levels
- Standard with yellow elastomer spider (92 SH A)
- Puncture-proof and electrically insulating
- Length of threaded pin adapted to bore
- Coupling hubs optionally with keyways in accordance with DIN 6885-1

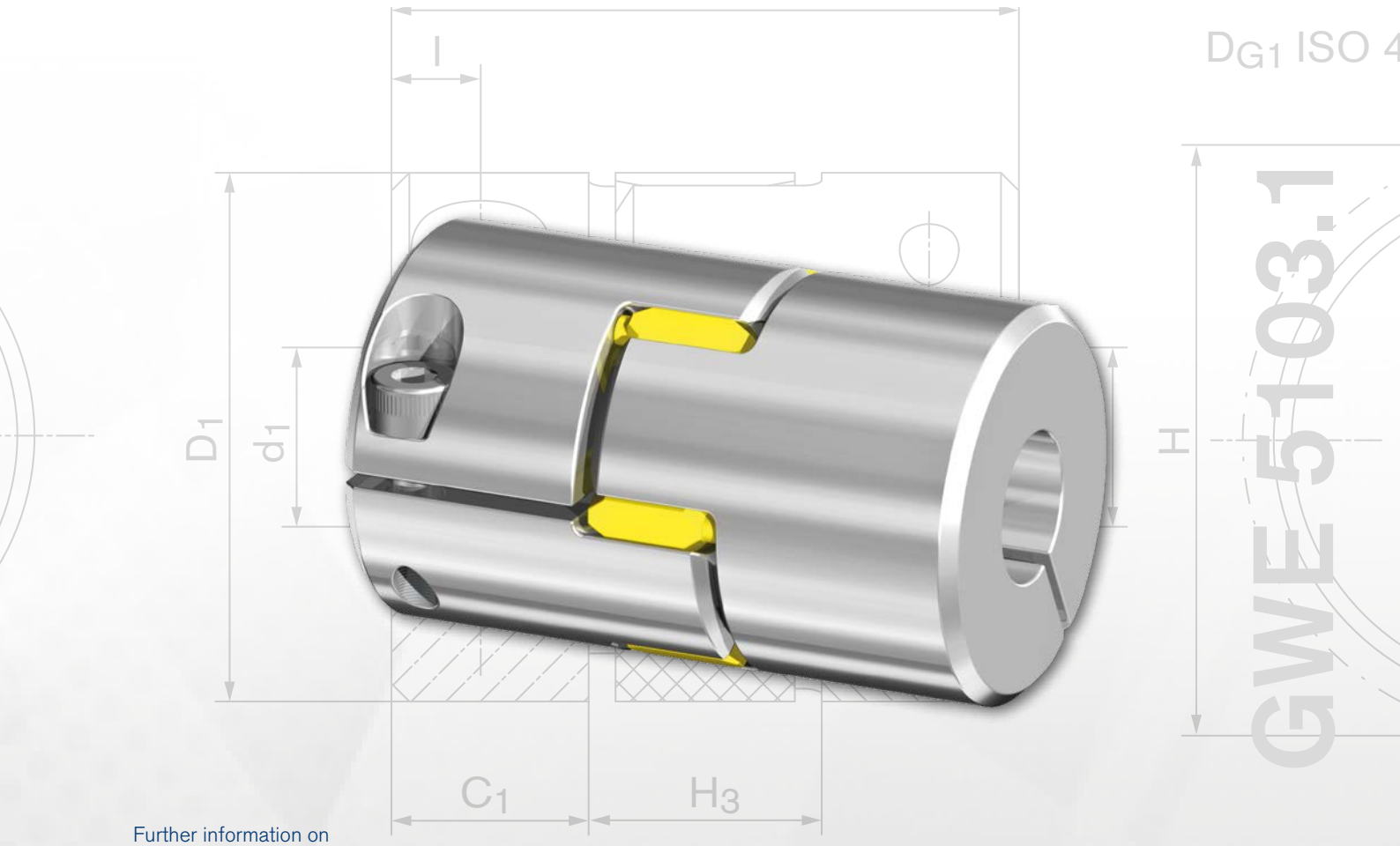


Further information on
**RINGFEDER® GWE 5103.1**
on **www.ringfeder.com**

## Miniature coupling with extended clamping hubs and single slit

The **RINGFEDER® GWE 5103.1** series of backlash-free jaw couplings excel with their compact design. It comprises two single-slit long coupling hubs with high concentricity and one elastomer spider that can be supplied in different Shore hardness levels. The shaft tolerance should lie within the fit tolerance ‘g6’ to ‘h7’.

The elastomer spider produces a backlash-free, puncture-proof, damped and electrically insulated elastic jaw coupling.

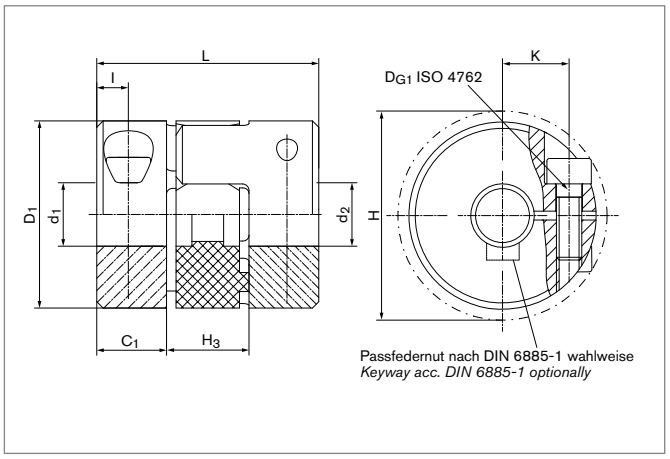


### Characteristics

- Low mass through aluminium hubs
- Optimisation of the vibration damping through different elastomer spider hardness levels
- Standard with yellow elastomer spider (92 SH A)
- Puncture-proof and electrically insulating
- Maximum coverage of the shaft with long coupling hub.
- Coupling hubs optionally with keyways in accordance with DIN 6885-1

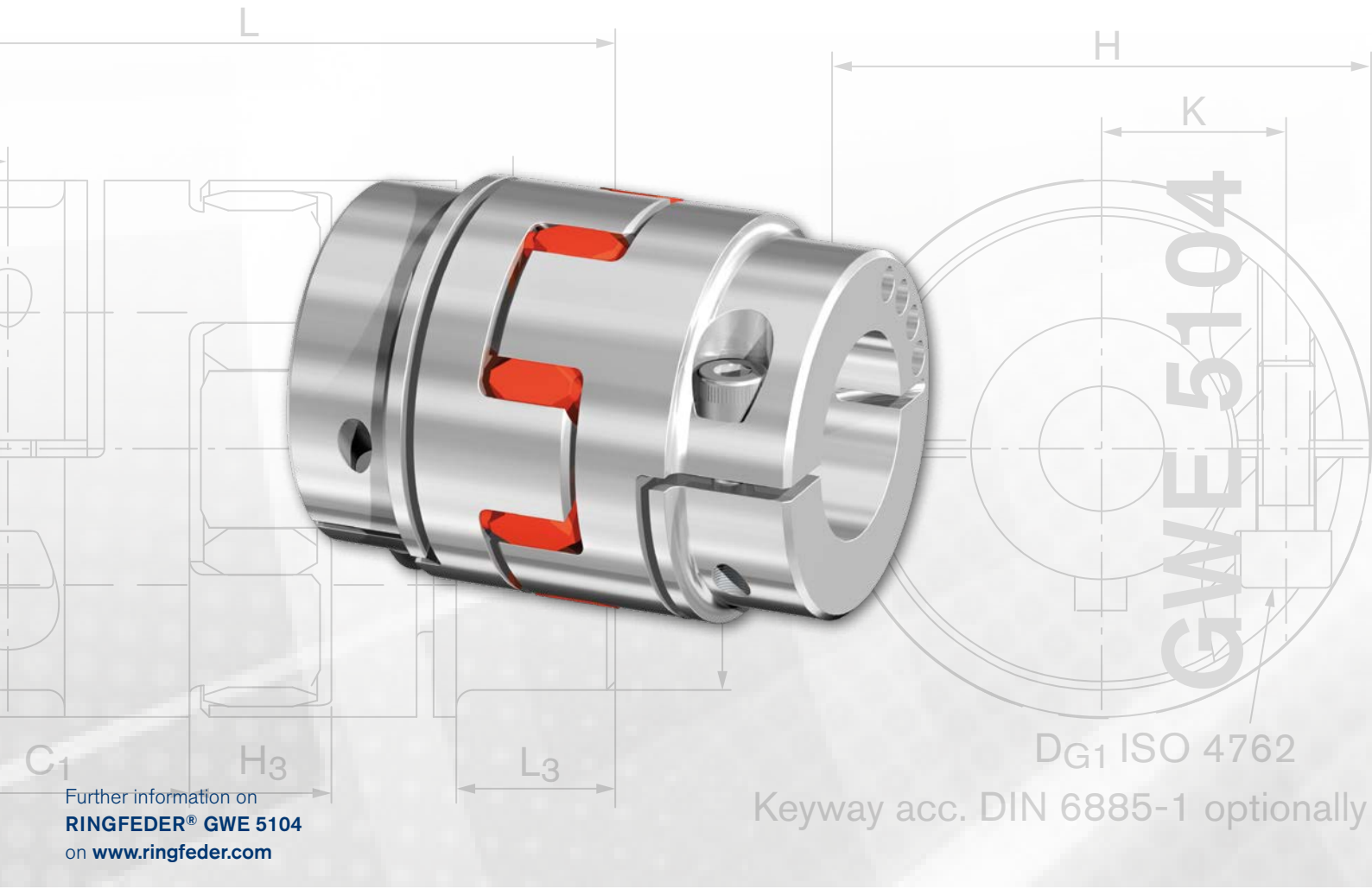


Further information on
**RINGFEDER® GWE 5104**
on **www.ringfeder.com**

## Servo-Insert coupling with clamping hubs and dual slits

Jaw couplings in the series **RINGFEDER® GWE 5104**, with clamp hubs and a high level of international standardisation. Up to size 19 it comprises two axially (single-)slit and from size 24 two axially and radially (double-)slit clamp hubs with high concentricity and an elastomer spider that can be supplied in different levels of Shore hardness. The shaft tolerance should lie within the fit tolerance 'g6' to 'h7'.

The coupling is available with elastomer spiders in different Shore hardness levels and impresses with its special damping properties.

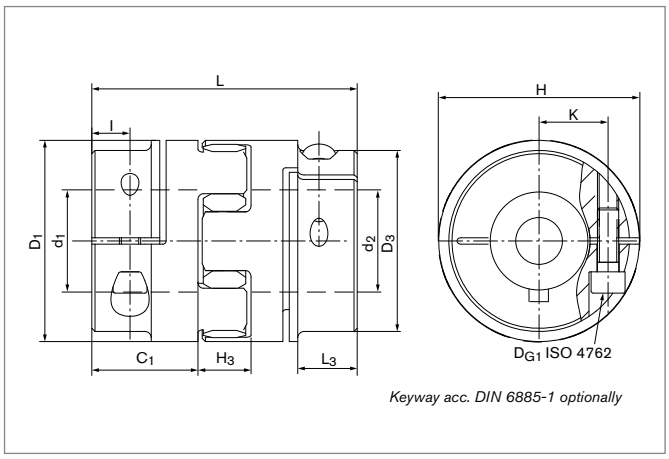


### Characteristics

- Hubs up to size 48 made of aluminum, from size 55 made of steel
- Optimisation of the vibration damping through different elastomer spider hardness levels
- As standard with red elastomer spider. Up to size 55 in 98 Shore A and from size 65 in 95 Shore A
- Installation space in accordance with the known market standard
- Puncture-proof and electrically insulating
- Coupling hubs optionally with keyways in accordance with DIN 6885-1

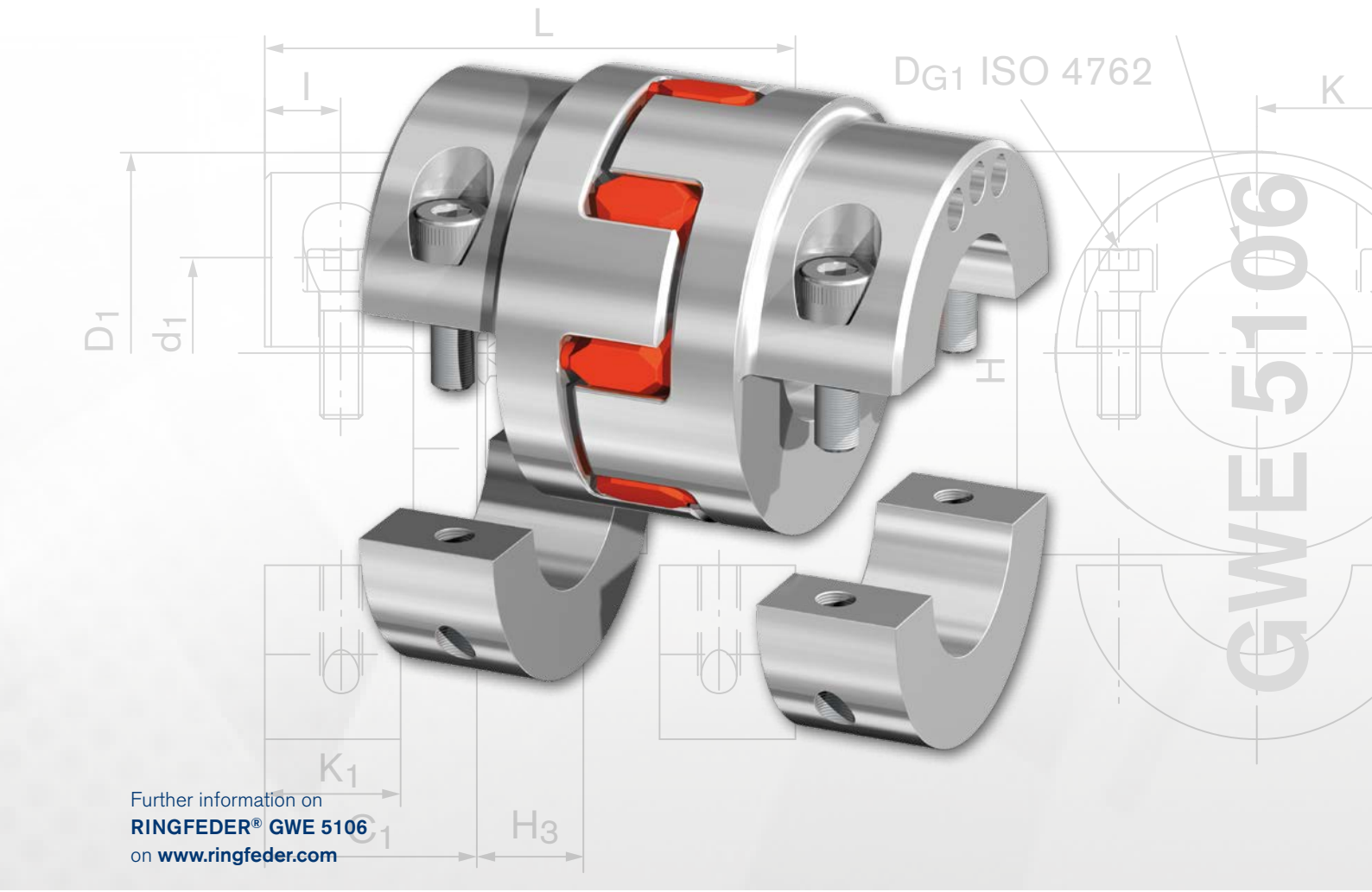


Further information on
**RINGFEDER® GWE 5106**
on **www.ringfeder.com**

## Servo-Insert coupling with clamping hubs in split hub design

The **RINGFEDER® GWE 5106** combined the advantage of the RINGFEDER® GWE 5104 Servo-Insert Coupling with an easy installation. The clamping hubs in split hub design can be mounted lateral at the aligned shaft extensions. The shaft tolerance should lie within the fit tolerance 'g6' to 'h7'.

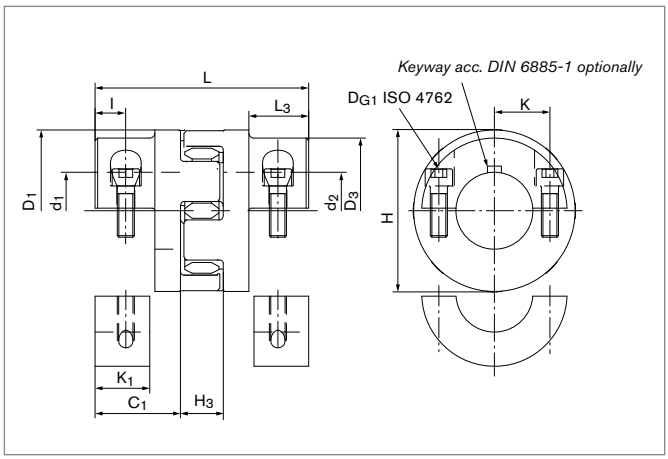


### Characteristics

- Hubs up to size 48 made of aluminum, from size 55 made of steel
- Optimisation of the vibration damping through different elastomer spider hardness levels
- As standard with red elastomer spider. Up to size 55 in 98 Shore A and from size 65 in 95 Shore A
- Simple radial installation and removal without shifting the shafts
- Puncture-proof and electrically insulating
- Coupling hubs optionally with keyways in accordance with DIN 6885-1

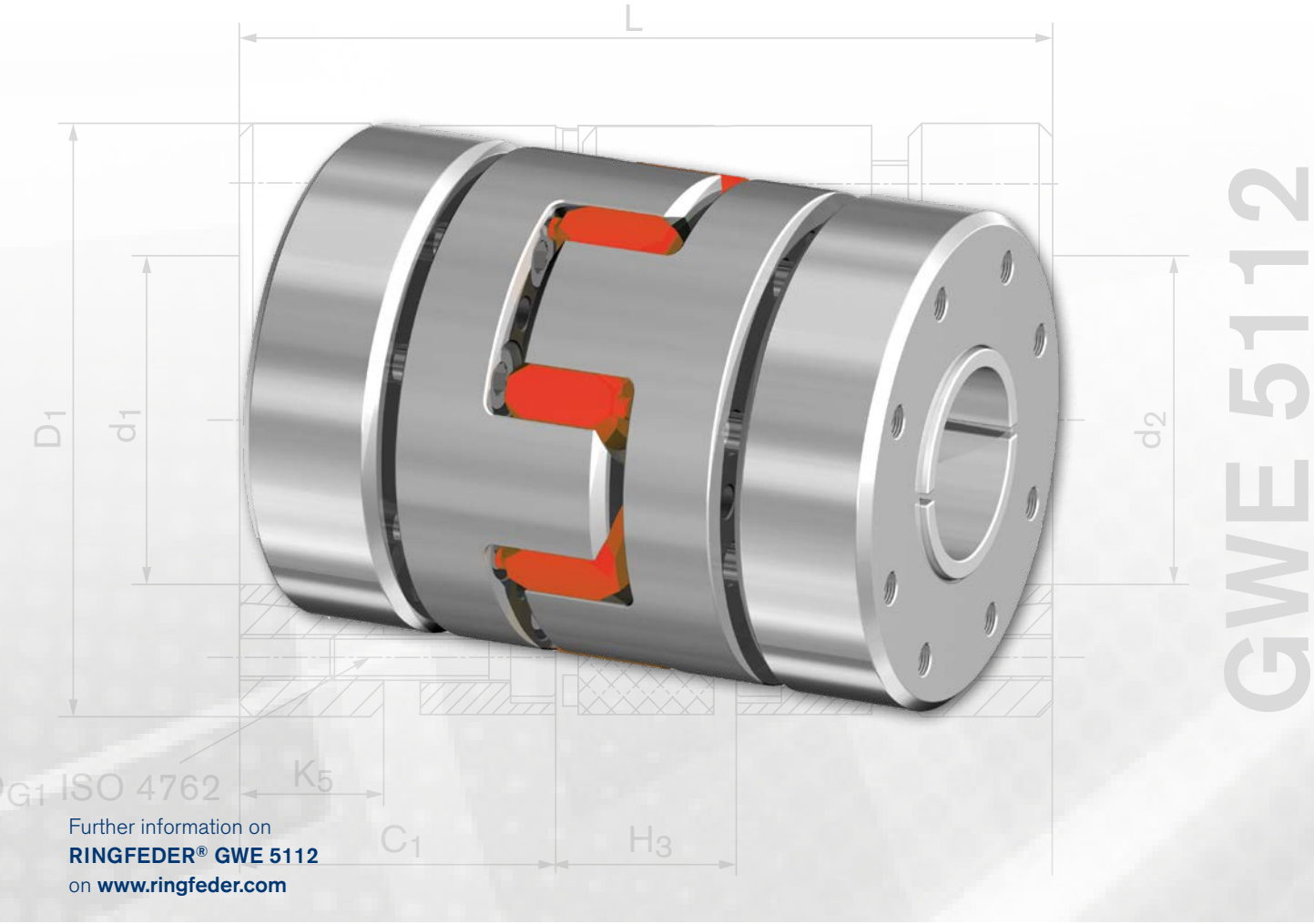


Further information on
**RINGFEDER® GWE 5112**
on **www.ringfeder.com**

## Servo-Insert coupling with outer cone

**RINGFEDER® GWE 5112** is a backlash-free balance coupling with outer cone that is also suitable for the highest speeds. The best possible concentricity of the coupling parts that is necessary for this is made possible by the symmetrical structure and the precise manufacture.

High clamping force is produced on the shaft by tightening the easily accessible screw connection on the conical outer tensioning ring and this counters the impact of centrifugal force and has a positive effect on the torque transmission. The shaft tolerance should lie within the fit tolerance of 'g6' to 'h7'.

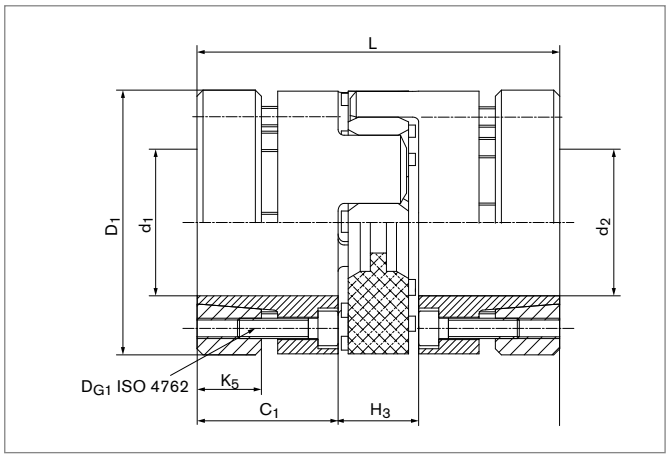


### Characteristics

- Hubs up to size 38 made of aluminum, from size 42 made of steel
- Steel outer tensioning ring
- High concentricity of assembly friendly coupling
- Optimisation of the vibration damping through different elastomer spider hardness levels
- Standard with red spider 98 SH A
- Puncture-proof and electrically insulating

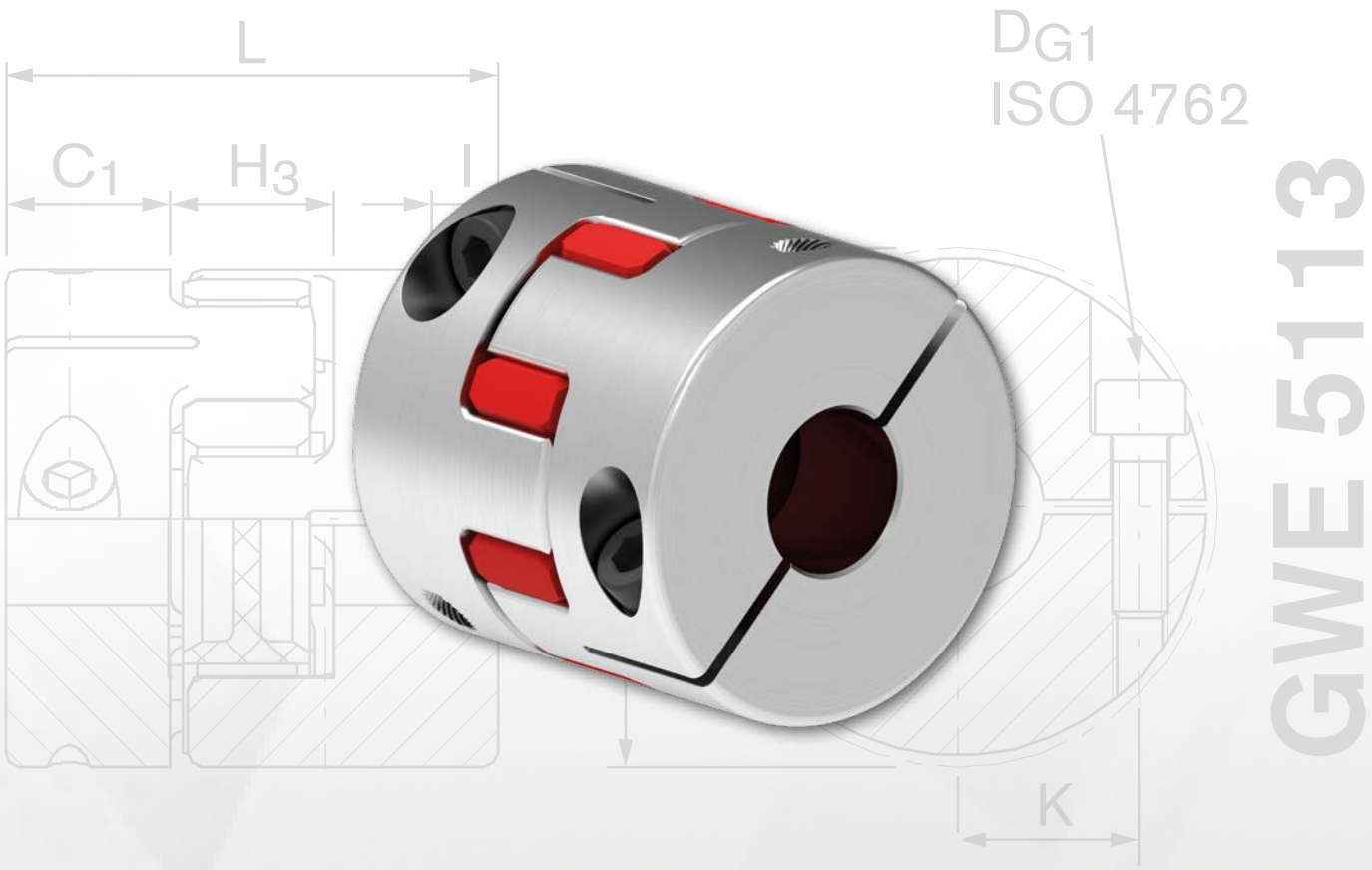


Further information on
**RINGFEDER® GWE 5113**
on **www.ringfeder.com**

## Servo-Insert coupling with clamping hubs, short length and single slit

The **RINGFEDER® GWE 5113** type of backlash-free jaw couplings is characterised among other things by its compact design with low moment of inertia. It comprises of two single-slit coupling hubs with high concentricity and one elastomer spider that can be supplied in different shore hardness levels. The shaft tolerance should lie within the fitting tolerance 'g6' to 'h7'.

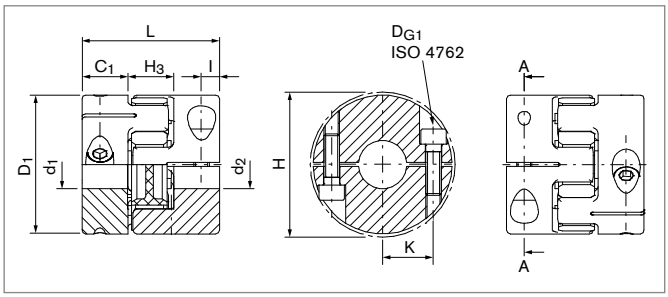


The elastomer spider creates a backlash-free, puncture-proof, damped and electrically insulated connection.

### Characteristics

- Low mass through aluminium hubs
- Optimisation of the vibration damping through different elastomer spider hardness levels
- As standard in size 14 to 42 with red elastomer spider
- Puncture-proof and electrically insulating
- Coupling hubs optionally with keyways in accordance with DIN 6885-1
- Good concentric running properties and uniform power transmission due to jaw area without slit
- Equal weight distribution because of symmetrical screw position
- Compact design for application in limited installation space

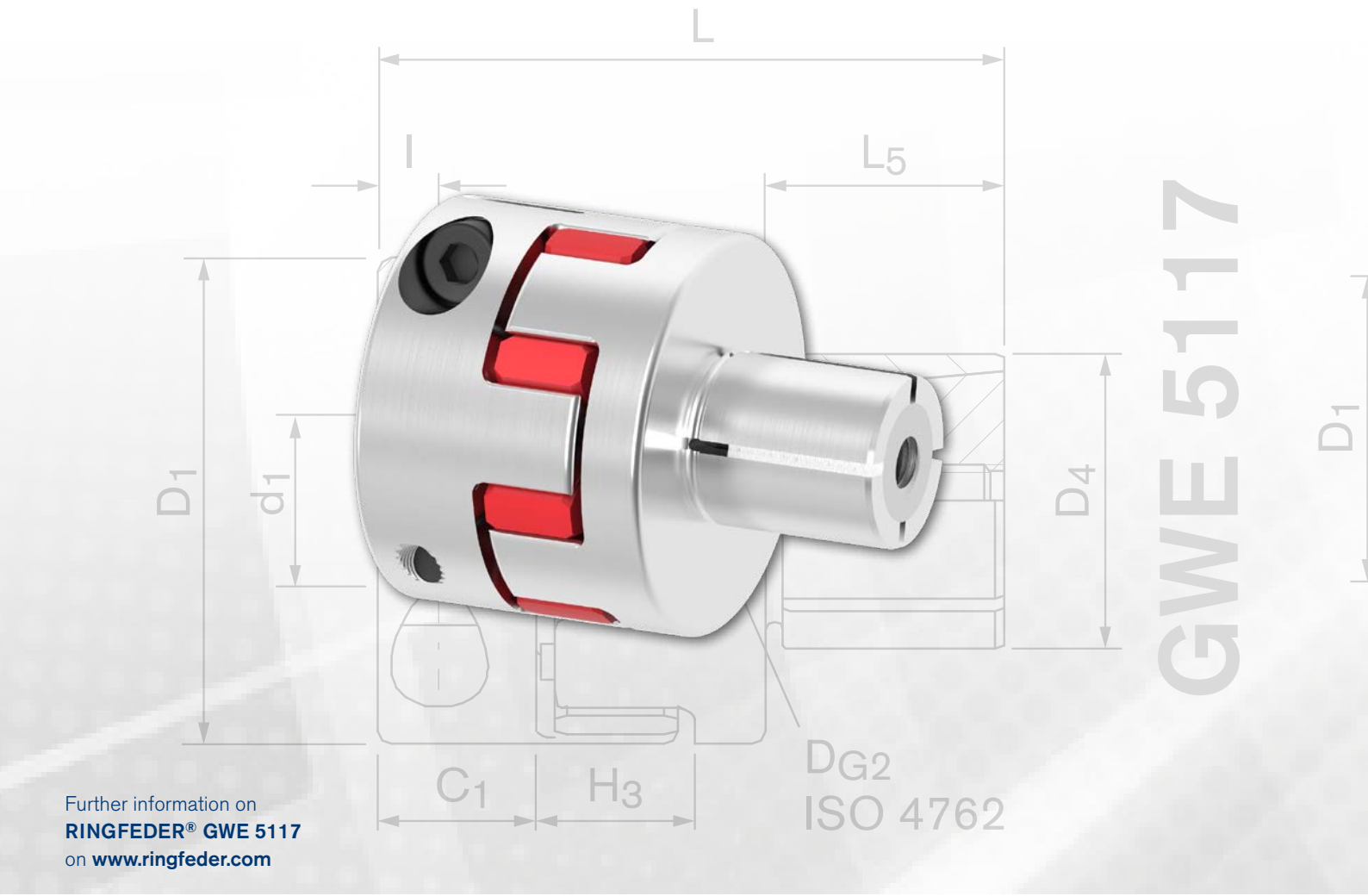


Further information on
**RINGFEDER® GWE 5117**
on **www.ringfeder.com**

## Servo-Insert coupling with clamping hubs and expanding clamps

The type **RINGFEDER® GWE 5117** is a compact and backlash-free jaw coupling with expanding mandrel and clamping hub. The expanding hub is mounted in a hollow shaft by tightening the tensioning screw. We recommend a bore tolerance of H7 for the hollow shaft. The shaft tolerance for the clamping hub should lie within the fit tolerance of 'g6' to 'h7'.

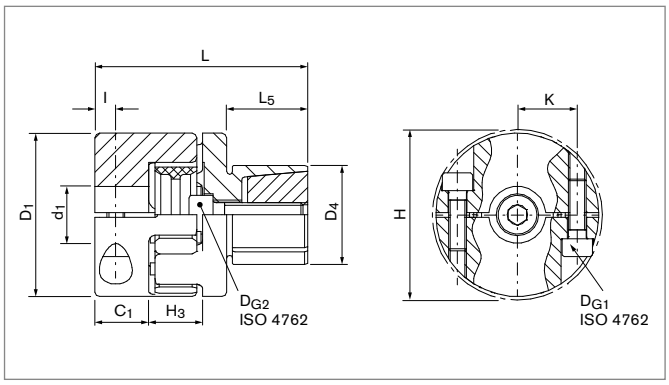


### Characteristics

- Low mass through aluminium hubs
- Expanding mandrel and internal cone in steel
- Optimisation of the vibration damping through different elastomer spider hardness levels
- As standard in size 14 to 28 with red elastomer spider
- Puncture-proof and electrically insulating
- Coupling hubs optionally with keyways in accordance with DIN 6885-1

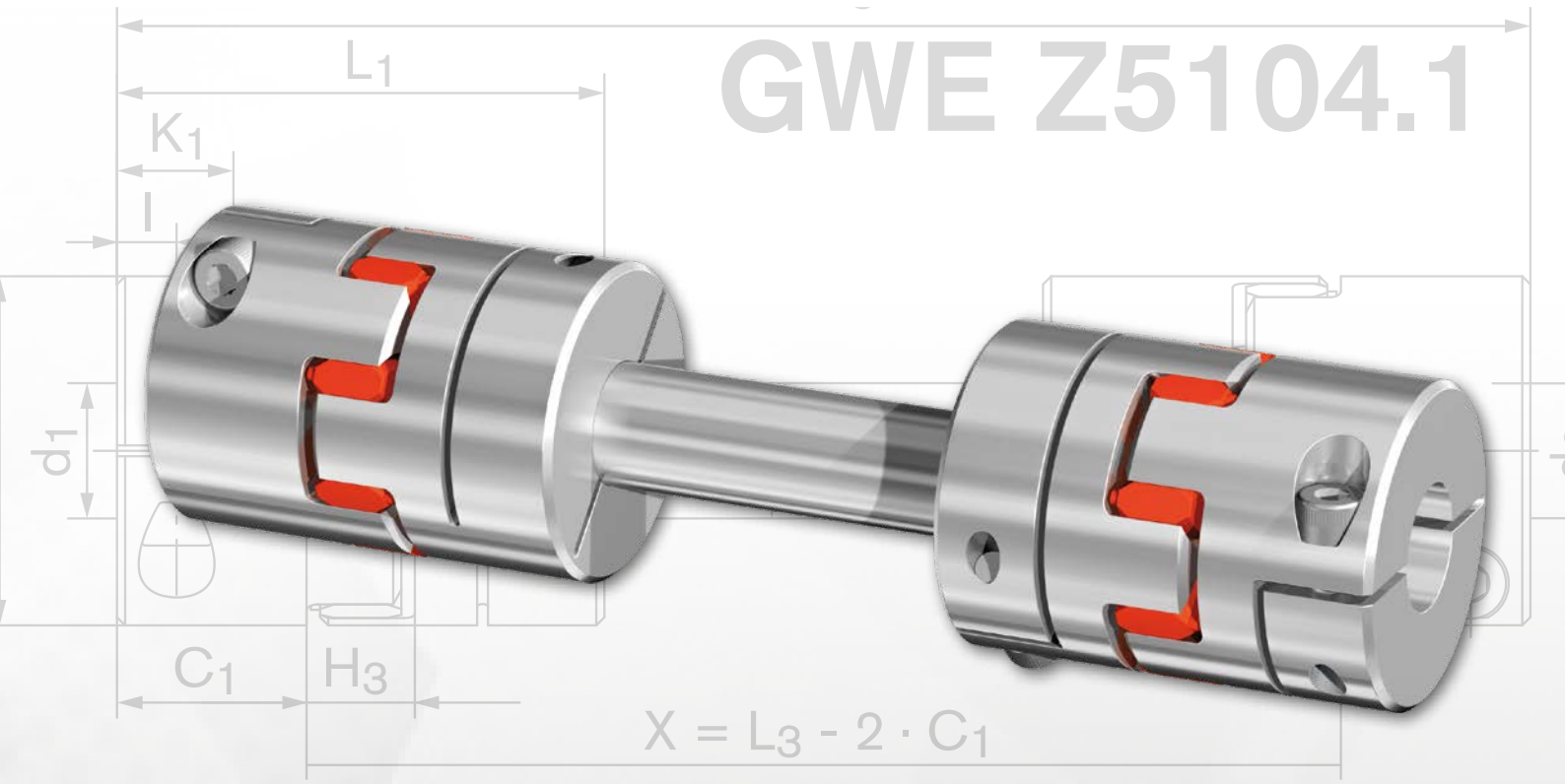


Further information on
**RINGFEDER® GWE Z5104.1**
on **www.ringfeder.com**

## Servo-Insert coupling with clamping hubs for large shaft spacings

The backlash-free jaw coupling of the **RINGFEDER® GWE Z5104.1** series that is designed as a torsionally flexible intermediate shaft is used where torque or rotation need to be transmitted with the greatest possible angle precision and a large shaft separation needs to be bridged. It comprises two RINGFEDER® GWE 5104, connected by a precision hollow shaft in steel. The shaft tolerance should lie within the fit tolerance of 'g6' to 'h7'.

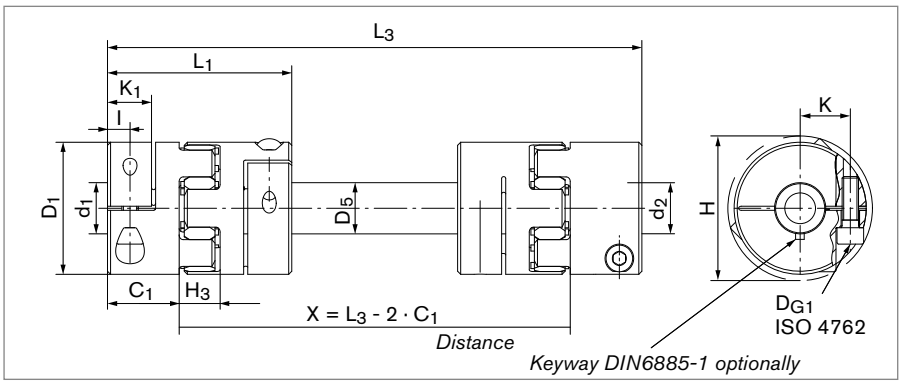


### Characteristics

- Low mass through aluminium hubs
- Optimisation of the vibration damping through different elastomer spider hardness levels
- As standard with red elastomer spider. Up to size 55 in 98 Shore A and from size 65 in 95 Shore A
- Shaft separation of up to 3000 mm can be bridged
- Puncture-proof and electrically insulating
- Coupling hubs optionally with keyways in accordance with DIN 6885-1

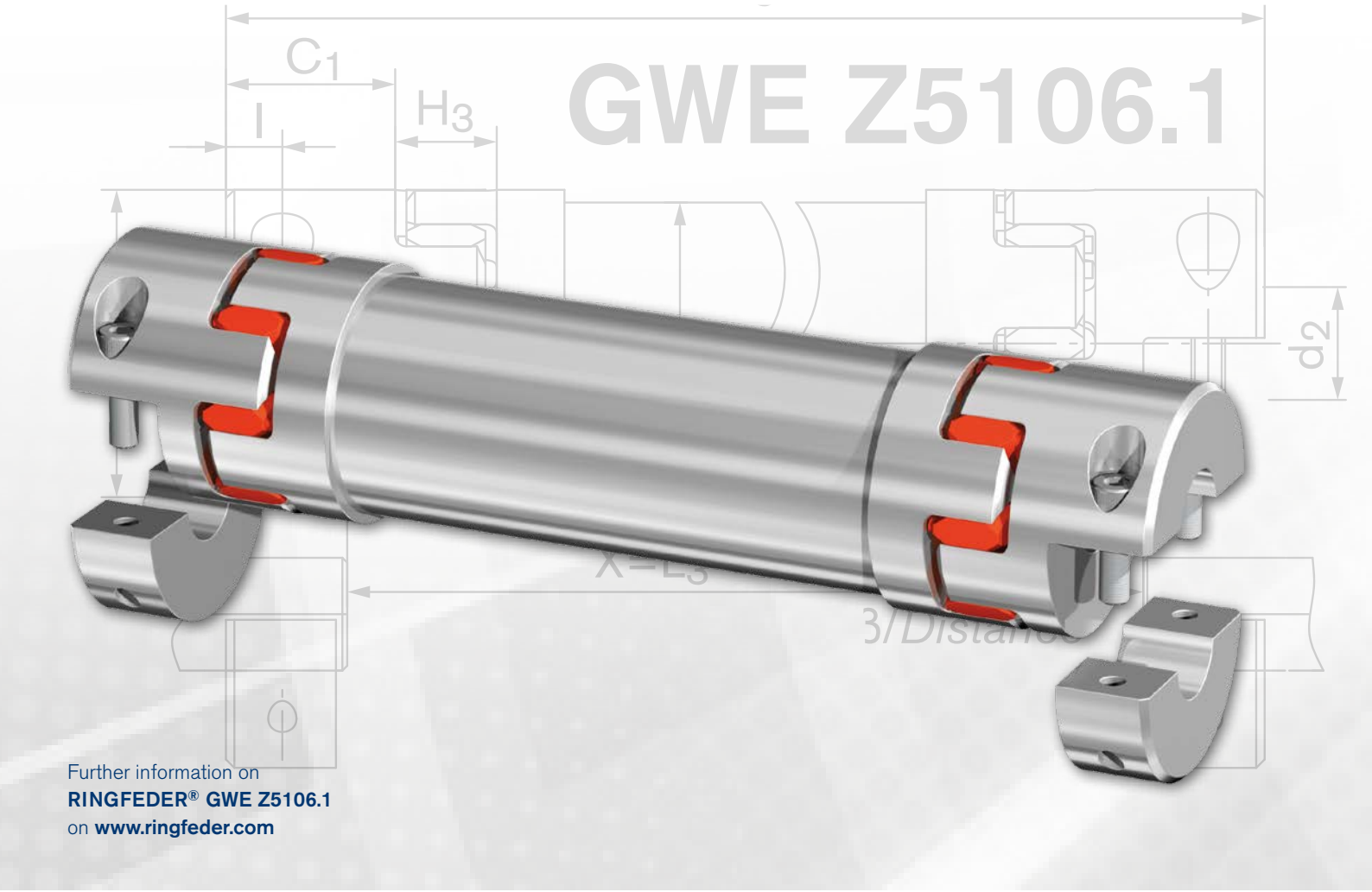


Further information on
**RINGFEDER® GWE Z5106.1**
on **www.ringfeder.com**

# Servo-Insert coupling with clamping hubs in split hub design for large shaft spacings

As for the GWE Z5104.1 this balancing coupling **RINGFEDER® GWE Z5106.1** is also used to bridge large shaft separations. The clamping hubs in a half shell structure mean that the known benefits are supplemented by the advantage of single radial assembly on the previously aligned shafts. It comprises two RINGFEDER® GWE 5106, connected by an aluminium precision intermediate pipe. The shaft tolerance should lie within the fit tolerance of 'g6' to 'h7'.

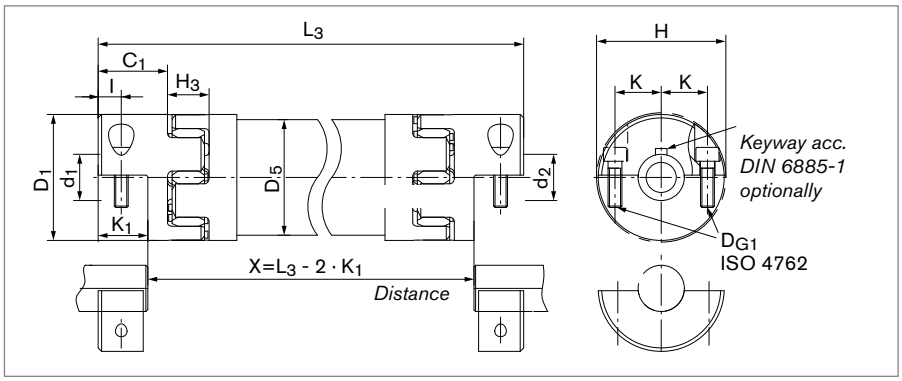


## Characteristics

- Low mass through aluminium hubs and precision intermediate tube
- Optimisation of the vibration damping through different elastomer spider hardness levels
- As standard with red elastomer spider. Up to size 55 in 98 Shore A and from size 65 in 95 Shore A
- Shaft separation of up to 3000 mm can be bridged
- Puncture-proof and electrically insulating
- Coupling hubs optionally with keyways in accordance with DIN 6885-1

PORTATA MASSIMA
MAX USEFUL LOAD
30
KG.

# TNM

# Elastomer Jaw Couplings

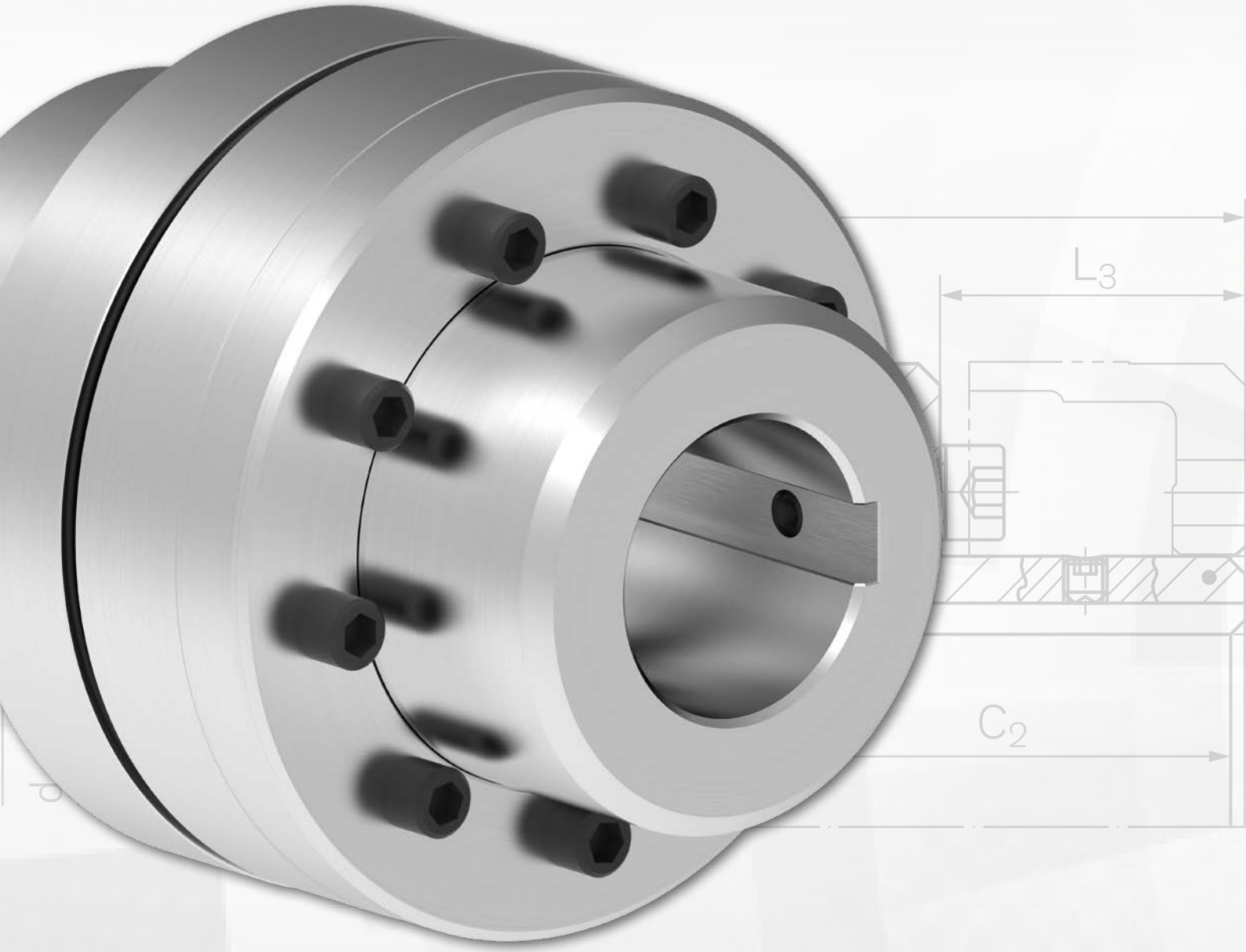


## Elastomer Jaw Couplings RINGFEDER® TNM

RINGFEDER® TNM jaw couplings can be used universally in general engineering and are primarily utilised as drive and output couplings for gears, in pumps and screw compressor drives as well as in combined heat and power plants.

## Characteristics · Advantages

- Torsionally flexible
- Damping of torsional vibrations
- Blind connection
- Many variations with modular design
- Individual elastomers joined to one intermediate ring
- Max. Torque: 27 – 97500 Nm
- Easy replacement of elastomers

## Basic information

Intermediate rings are available in two different material hardness levels (Pb72 and Pb82) for each coupling size. The harder the intermediate ring the higher the transmittable torque but also the higher the torsion spring stiffness. The nominal torque given in the data table for the $T_{KN}$ coupling can be transmitted continuously. The maximum coupling torque $T_{Kmax}$ can be transmitted briefly up to $10^5$ times, for example as occurs during start-up.

When the hard elastic element of Pb82 is used for multi-part coupling designs, it has to be taken into account that the maximum transmittable torque ($T_{KGmax}$) is reduced. In these cases, $T_{Kmax}$ is limited by the frictional engagement between the coupling hub and the claw ring.

Torsional vibration analyses (TVR) are performed by specialists to optimize the drive line. To this purpose, a detailed description of the oscillatory system is required, including the mechanical arrangement (spring-mass system) as well as the plant-related excitation functions. The specific coupling data such as stiffness, damping and mass moments of inertia will be supplied on request.

| Size | Speed | Torque with intermediate ring | | | | |
|---|---|---|---|---|---|---|
| | 1/min | Nm | | Nm | | |
| | | Pb72 | | Pb82 | | |
| | $n_{max}$ | $T_{KN}$ | $T_{Kmax}$ | $T_{KN}$ | $T_{Kmax}$ | $T_{KGmax}$ |
| 50 | 12500 | 13 | 27 | 20 | 45 | - |
| 67 | 10000 | 22 | 45 | 35 | 75 | - |
| 82 | 8000 | 48 | 100 | 75 | 160 | 150 |
| 97 | 7000 | 96 | 200 | 150 | 340 | 210 |
| 112 | 6000 | 150 | 310 | 230 | 540 | 540 |
| 128 | 5000 | 250 | 500 | 380 | 860 | 650 |
| 148 | 4500 | 390 | 800 | 600 | 1350 | 1350 |
| 168 | 4000 | 630 | 1300 | 980 | 2250 | 1800 |
| 194 | 3500 | 1050 | 2000 | 1650 | 3630 | 2400 |
| 214 | 3000 | 1500 | 3100 | 2400 | 5400 | 4200 |
| 240 | 2750 | 2400 | 4800 | 3700 | 8650 | 6200 |
| 265 | 2500 | 3700 | 7500 | 5800 | 13500 | 8300 |
| 295 | 2250 | 4900 | 10000 | 7550 | 18000 | 10500 |
| 330 | 2000 | 6400 | 13000 | 9900 | 23400 | 14500 |
| 370 | 1750 | 8900 | 18200 | 14000 | 32750 | 20000 |
| 415 | 1500 | 13200 | 27000 | 20500 | 49000 | 27000 |
| 480 | 1400 | 18000 | 36000 | 28000 | 66000 | 66000 |
| 575 | 1200 | 27000 | 54000 | 41000 | 97500 | 97500 |

$T_{KN}$ = Nominal torque of coupling

$T_{Kmax}$ = Max. torque of the coupling by one part design

$T_{KGmax}$ = Max. torque of the coupling by multi-part design

## Principle of the one-part design

Elastic elements replacement requires extensive dismounting operations as the driving and driven machines have to be moved axially.

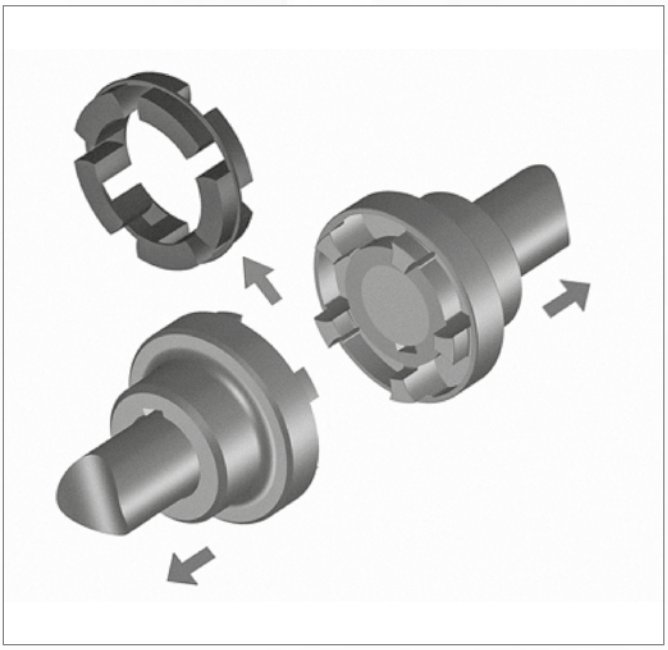

## Principle of the multi-part design

Elastic elements replacement only requires a minimum of work and the driving and driven machines do not need to be axially displaced.

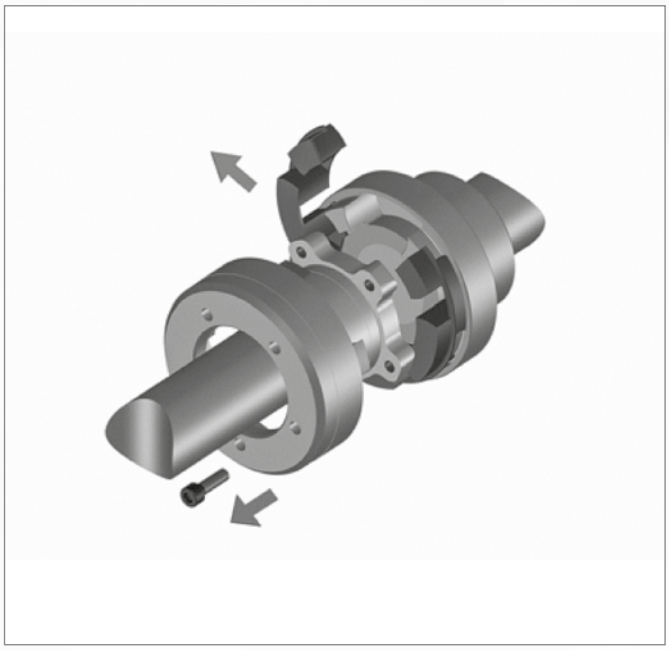

## Allocation of the RINGFEDER® TNM couplings to IEC standard motors
## Protection rating IP 54/IP 55 (intermediate ring Pb72)

| Size | Motor | kW n= 3.000 min$^{-1}$ | Coupling size | kW n= 1.500 min$^{-1}$ | Coupling size | kW n= 1.000 min$^{-1}$ | Coupling size | kW n= 750 min$^{-1}$ | Coupling size | Cyl. shaft end d x L by rotary speed of = 3000 min-1 | ≤ 3000 min-1 |
|---|---|---|---|---|---|---|---|---|---|---|---|
| 56 | - | 0,09 | 50 | 0,06 | 50 | 0,04 | 50 | - | - | 9x20 | 9x20 |
| 56 | - | 0,12 | 50 | 0,09 | 50 | 0,05 | 50 | - | - | 9x20 | 9x20 |
| 63 | - | 0,18 | 50 | 0,12 | 50 | 0,06 | 50 | - | - | 11x23 | 11x23 |
| 63 | - | 0,25 | 50 | 0,18 | 50 | 0,09 | 50 | - | - | 11x23 | 11x23 |
| 71 | - | 0,37 | 50 | 0,25 | 50 | 0,18 | 50 | 0,09 | 50 | 14x30 | 14x30 |
| 71 | - | 0,55 | 50 | 0,37 | 50 | 0,25 | 50 | 0,12 | 50 | 14x30 | 14x30 |
| 80 | - | 0,75 | 50 | 0,55 | 50 | 0,37 | 50 | 0,18 | 50 | 19x40 | 19x40 |
| 80 | - | 1,1 | 50 | 0,75 | 50 | 0,55 | 50 | 0,25 | 50 | 19x40 | 19x40 |
| 90 | S | 1,5 | 67 | 1,1 | 67 | 0,75 | 67 | 0,37 | 67 | 24x50 | 24x50 |
| 90 | L | 2,2 | 67 | 1,5 | 67 | 1,1 | 67 | 0,55 | 67 | 24x50 | 24x50 |
| 100 | L | 3 | 67 | 2,2 | 82 | 1,5 | 67 | 0,75 | 67 | 28x60 | 28x60 |
| 100 | L | - | - | 3 | 82 | - | - | 1,1 | 67 | 28x60 | 28x60 |
| 112 | M | 4 | 67 | 5 | 82 | 2,2 | 82 | 1,5 | 82 | 28x60 | 28x60 |
| 132 | S | 5,5 | 97 | 5,5 | 97 | 3 | 97 | 2,2 | 97 | 38x80 | 38x80 |
| 132 | S | 7,5 | 97 | - | - | - | - | - | - | 38x80 | 38x80 |
| 132 | M | - | - | 7,5 | - | 4 | 97 | 3 | 97 | 38x80 | 38x80 |
| 132 | M | - | - | - | 97 | 5,5 | 97 | - | - | 42x110 | 42x110 |
| 160 | M | 11 | 97 | 11 | - | 7,5 | 97 | 4 | 97 | 42x110 | 42x110 |
| 160 | M | 15 | 97 | - | 97 | - | - | 5,5 | 97 | 42x110 | 42x110 |
| 160 | L | 18,5 | 112 | 15 | - | 11 | 112 | 7,5 | 112 | 48x110 | 48x110 |
| 180 | M | 22 | 112 | 18,5 | 112 | - | - | - | - | 48x110 | 48x110 |
| 180 | L | - | - | 22 | 112 | 15 | 128 | 11 | 128 | 55x110 | 55x110 |
| 200 | L | 30 | 128 | 30 | 128 | 18,5 | 128 | 15 | 128 | 55x110 | 55x110 |
| 200 | L | 37 | 128 | - | 148 | 22 | 128 | - | - | 60x140 | 60x140 |
| 225 | S | - | - | 37 | - | - | - | 18,5 | 148 | 60x140 | 60x140 |
| 225 | M | 45 | 128 | 45 | 148 | 30 | 148 | 22 | 148 | 65x140 | 65x141 |
| 250 | M | 55 | 148 | 55 | 148 | 37 | 168 | 30 | 168 | 75x140 | 75x140 |
| 280 | S | 75 | 18 | 75 | 168 | 45 | 168 | 37 | 168 | 75x140 | 75x140 |
| 280 | M | 90 | 148 | 90 | 168 | 55 | 194 | 45 | 194 | 80x170 | 80x170 |
| 315 | S | 110 | 168 | 110 | 194 | 75 | 194 | 55 | 194 | 80x170 | 80x170 |
| 315 | M | 132 | 168 | 132 | 194 | 90 | 194 | 75 | 214 | 80x170 | 80x170 |
| 315 | L | 160 | 168 | 160 | 214 | 110 | 214 | 90 | 214 | 80x170 | 80x170 |
| 315 | L | 200 | 194 | 200 | 240 | 132 | 240 | 110 | 240 | 80x170 | 80x170 |
| 315 | L | - | - | - | - | 160 | 240 | 132 | 240 | 80x170 | 80x170 |
| 315 | - | 250 | 194 | 250 | 240 | 200 | 240 | 160 | 265 | 85x170 | 85x170 |
| 315 | - | 315 | 214 | 315 | 265 | 250 | 265 | 200 | 265 | 85x170 | 85x170 |
| 355 | - | 355 | 214 | 355 | 265 | 315 | 295 | 250 | 295 | 95x170 | 95x170 |
| 355 | - | 400 | - | 400 | 265 | 400 | 295 | 315 | 330 | 95x170 | 95x170 |
| 355 | - | 500 | - | 500 | 295 | - | - | - | - | 95x170 | 95x170 |
| 400 | - | 560 | - | 560 | 295 | 450 | 330 | 355 | 330 | 110x210 | 110x210 |
| 400 | - | 630 | - | 630 | 330 | 500 | 330 | 400 | 330 | 110x210 | 110x210 |
| 400 | - | 710 | - | 710 | 330 | 560 | 370 | 450 | 370 | 110x210 | 110x210 |
| 450 | - | 800 | - | 800 | 330 | 630 | 370 | 500 | 370 | 120x210 | 120x210 |
| 450 | - | 900 | - | 900 | 370 | 710 | 370 | 560 | 370 | 120x210 | 120x210 |
| 450 | - | 1000 | - | 1000 | 370 | 800 | 415 | 630 | 415 | 120x210 | 120x210 |

The allocation of the couplings takes into account a uniform torque at the operating point (minimum operating factor 1.25) with low variation and slight shocks and is valid up to an ambient temperature of +60 °C.

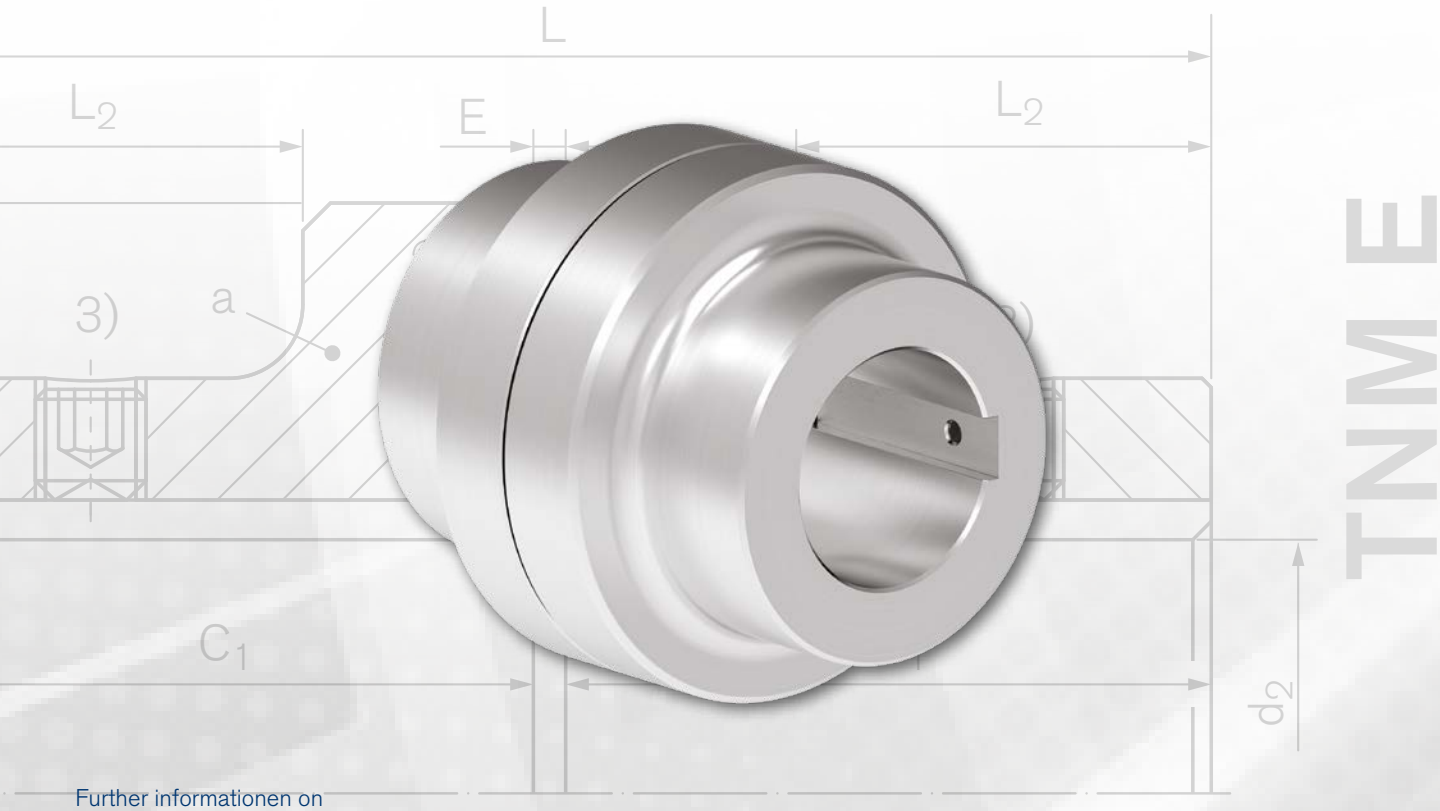


Further informationen on
**RINGFEDER® TNM E**
on **www.ringfeder.com**

# One-part design with 2 identical coupling hubs

The **RINGFEDER® TNM E** is a torsionally flexible and puncture-proof jaw coupling. It balances out angular, radial and axial shaft offset within determined tolerances. The coupling transmits the torque via pre-compressed, elastic buffers in synthetic rubber (Perbunan; Pb) that are connected to one another into an intermediate ring. The elastic intermediate ring in synthetic rubber (Perbunan; Pb) damps impacts and torsional vibration and is electrically conductive, so that undesired static charging is avoided. The coupling can be used in any direction of rotation and installation position.

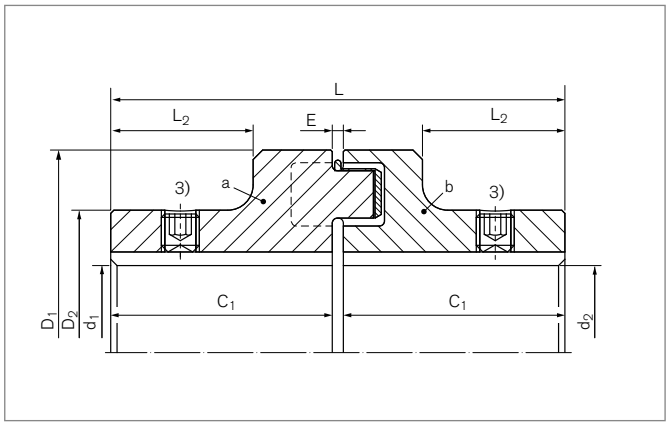


## Characteristics

- Torsionally flexible, compensate for angular, radial and axial shaft misalignment
- Pre-compressed individual buffers connected to an intermediate ring
- Intermediate rings of different Shore hardness levels (standard Pb72, hard Pb82), can be used from –30 °C to +100 °C
- Change of the elastic intermediate ring with shift of the connected aggregates
- Bores up to 230 mm
- Torques up to $T_{Kn}$ = 41000 Nm / $T_{Kmax}$ = 97500 Nm
- Speeds up to $n_{max}$ = 12500 $min^{-1}$

Further informationen on
**RINGFEDER® TNM G**
on **www.ringfeder.com**

# Multi-part design, to change the intermediate ring without axial movement of the driven parts

The **RINGFEDER® TNM G** is a torsionally elastic and puncture-proof jaw coupling with a movable jaw ring. It balances out angular, radial and axial shaft offset within determined tolerances. The coupling transmits the torque via pre-compressed, elastic buffers in synthetic rubber (Perbunan; Pb) that are connected to one another into an intermediate ring. The elastic intermediate ring in synthetic rubber (Perbunan; Pb) damps impacts and torsional vibration and is electrically conductive, so that undesired static charging is avoided. The coupling can be used in any direction of rotation and installation position. Easy separation of the coupled machines is possible because one coupling half is in two sections. The rotational direction of the drive can be inspected when the jaw ring is pushed back. One coupling half can also be lifted out radially with the corresponding aggregate. The elastic intermediate ring can be changed without shifting the machines axially.

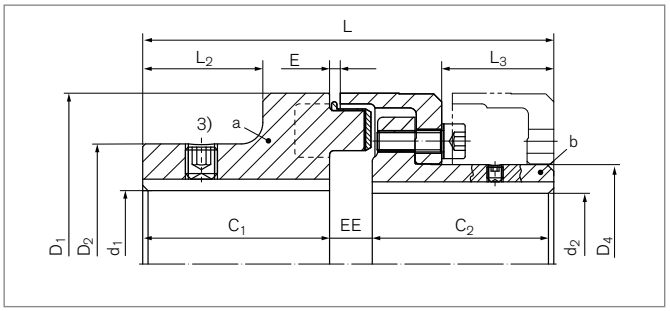


## Characteristics

- Torsionally flexible, compensate for angular, radial and axial shaft misalignment
- Pre-compressed individual buffers connected to an intermediate ring
- Intermediate rings of different Shore hardness levels (standard Pb72, hard Pb82), can be used from –30 °C to +100 °C
- Change of the elastic intermediate ring without shift of the connected aggregates.
- Bores up to 280 mm
- Torques up to $T_{Kn}$ = 41000 Nm / $T_{Kmax}$ = 97500 Nm
- Speeds up to $n_{max}$ = 8000 $min^{-1}$

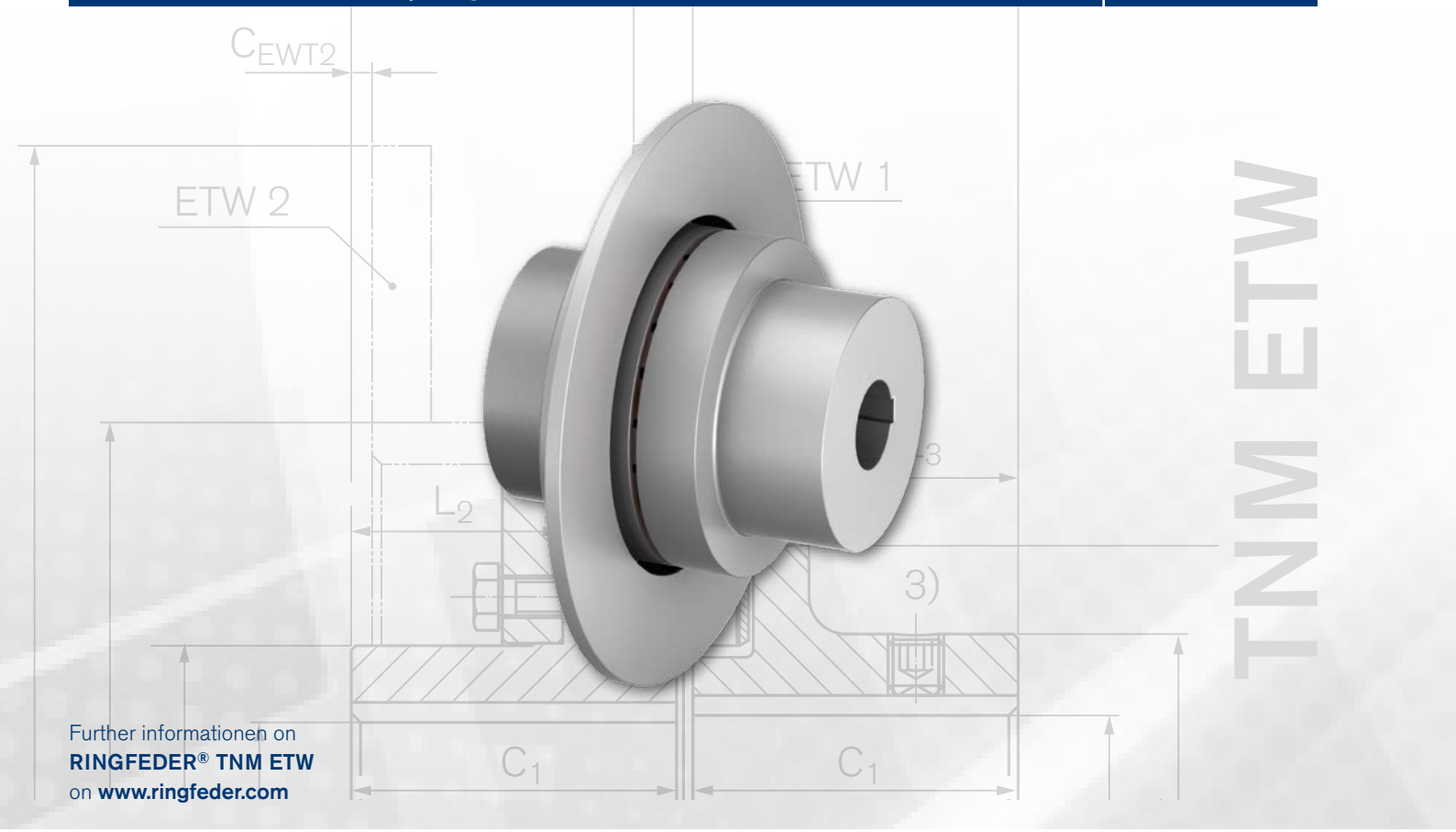


Further informationen on
**RINGFEDER® TNM ETW**
on **www.ringfeder.com**

# One part design with brake disc

The **RINGFEDER® TNM ETW** is a torsionally elastic and puncture-proof jaw coupling with a brake disc. It balances out angular, radial and axial shaft offset within determined tolerances. The coupling transmits the torque via pre-compressed, elastic buffers in synthetic rubber (Perbunan; Pb) that are connected to one another into an intermediate ring. The elastic intermediate ring in synthetic rubber (Perbunan; Pb) damps impacts and torsional vibration and is electrically conductive, so that undesired static charging is avoided. The coupling can be used in any direction of rotation and installation position.

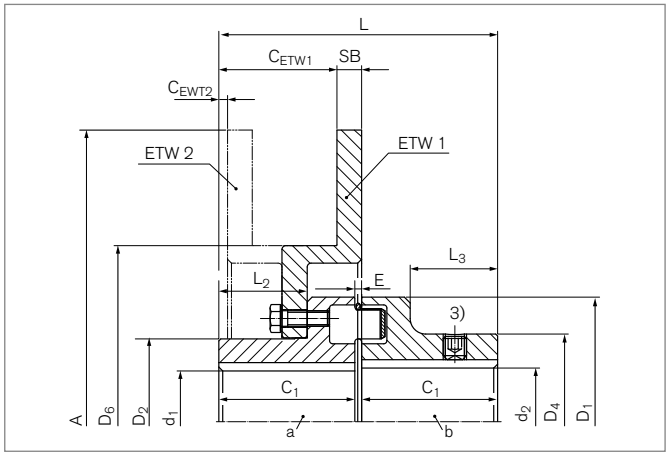


## Characteristics

- Torsionally flexible, compensate for angular, radial and axial shaft misalignment
- Pre-compressed individual buffers connected to an intermediate ring.
- Intermediate rings of different Shore hardness levels (standard Pb72, hard Pb82), can be used from –30 °C to +100 °C
- Brake disc in GGG, other materials on request
- Change of the elastic intermediate ring with shift of the connected aggregates.
- Bores up to 230 mm
- Torques up to $T_{Kn}$ = 41000 Nm / $T_{Kmax}$ = 97500 Nm
- Speeds up to $n_{max}$ = 5000 $min^{-1}$

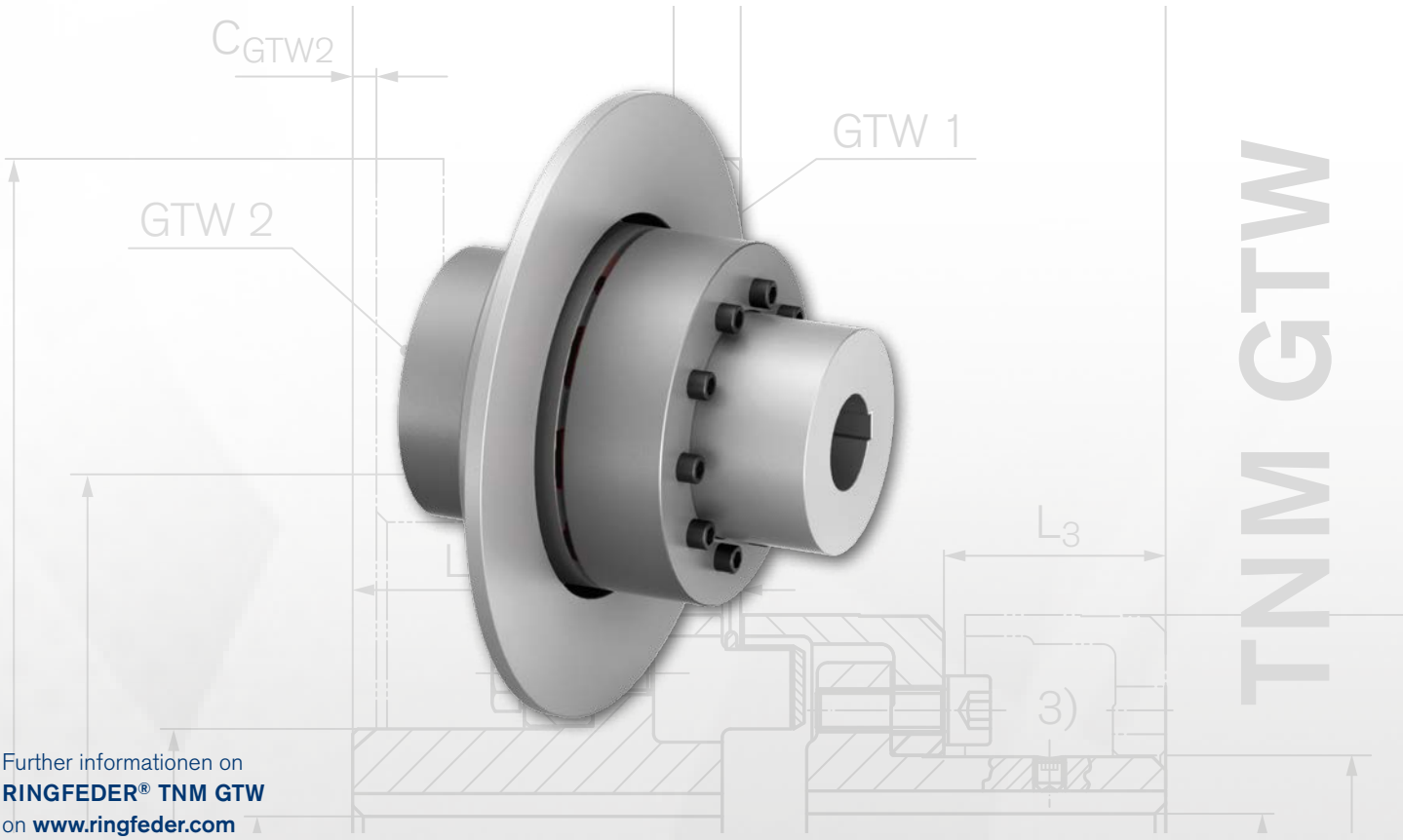


Further informationen on
**RINGFEDER® TNM GTW**
on **www.ringfeder.com**

# Multi-part design, to change the intermediate ring without axial movement of the driven parts with brake disc

The **RINGFEDER® TNM GTW** is a torsionally elastic and puncture-proof jaw coupling with a brake disc and a movable jaw ring. It balances out angular, radial and axial shaft offset within determined tolerances. The coupling transmits the torque via pre-compressed, elastic buffers in synthetic rubber (Perbunan; Pb) that are connected to one another into an intermediate ring. The elastic intermediate ring in synthetic rubber (Perbunan; Pb) damps impacts and torsional vibration and is electrically conductive, so that undesired static charging is avoided. The coupling can be used in any direction of rotation and installation position. Easy separation of the coupled machines is possible because one coupling half is in two sections. The rotational direction of the drive can be inspected when the jaw ring is pushed back. One coupling half can also be lifted out radially with the corresponding aggregate. The elastic intermediate ring can be changed without shifting the machines axially.

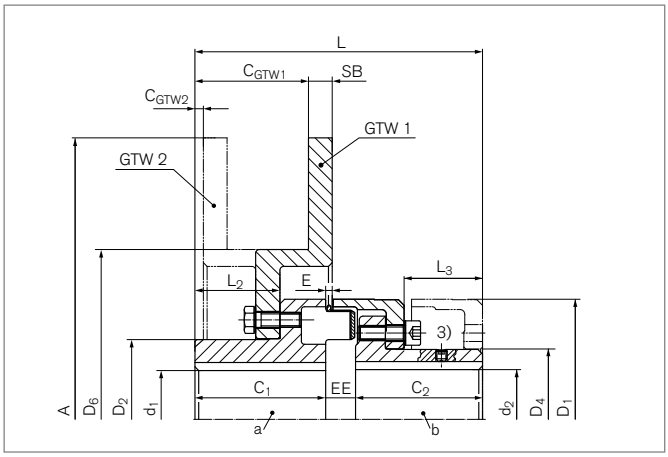


## Characteristics

- Torsionally flexible, compensate for angular, radial and axial shaft misalignment
- Pre-compressed individual buffers connected to an intermediate ring
- Intermediate rings of different Shore hardness levels (standard Pb72, hard Pb82), can be used from –30 °C to +100 °C
- Brake disc in GGG, other materials on request
- Change of the elastic intermediate ring without shift of the connected aggregates.
- Bores up to 280 mm
- Torques up to $T_{Kn}$ = 41000 Nm / $T_{Kmax}$ = 97500 Nm
- Speeds up $n_{max}$ = 5000 $min^{-1}$

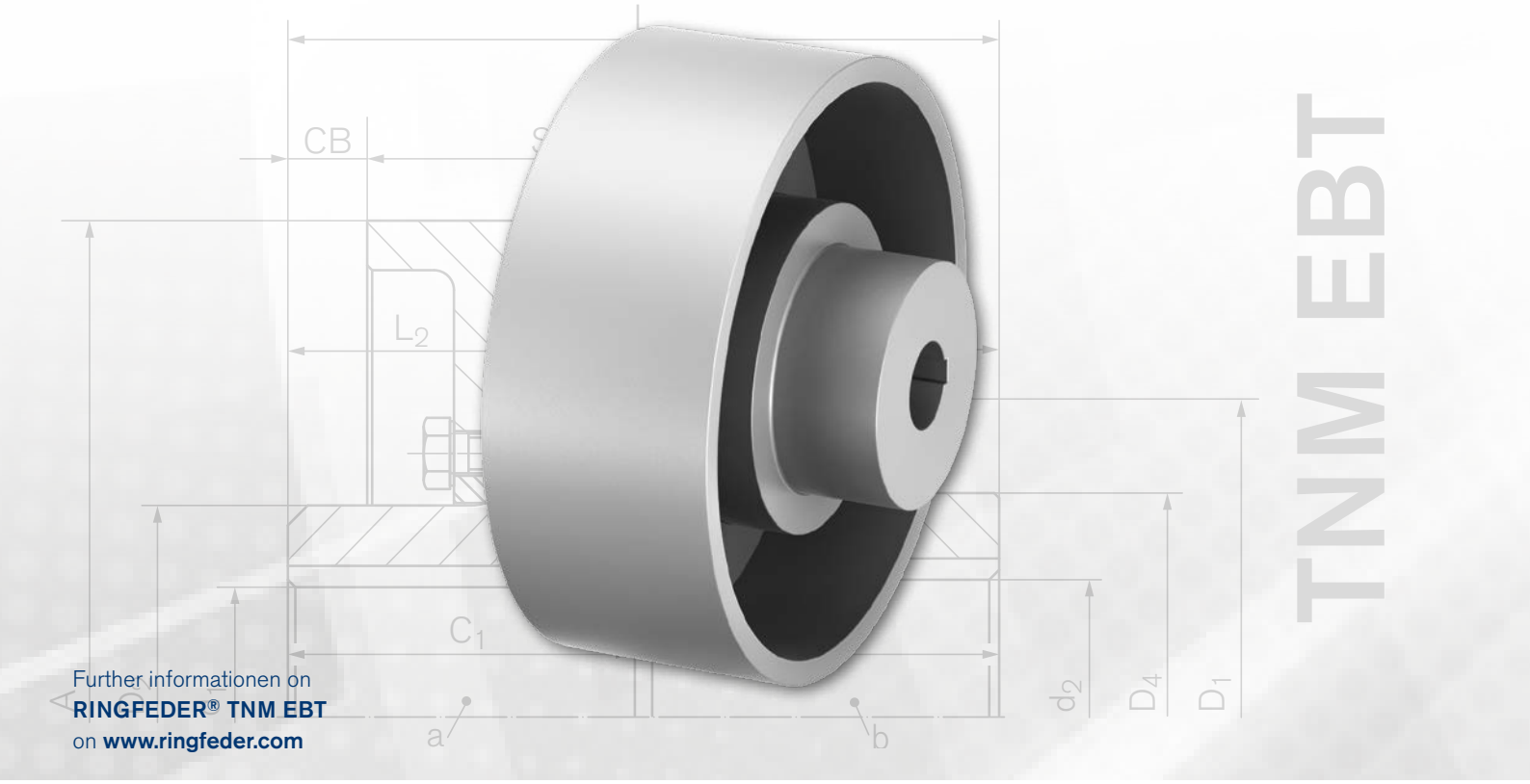


Further informationen on
**RINGFEDER® TNM EBT**
on **www.ringfeder.com**

# One part design with brake drum acc. to DIN 15431

Die **RINGFEDER® TNM EBT** is a torsionally elastic and puncture-proof jaw coupling with a brake drum. It balances out angular, radial and axial shaft offset within determined tolerances. The coupling transmits the torque via pre-compressed, elastic buffers in synthetic rubber (Perbunan; Pb) that are connected to one another into an intermediate ring. The elastic intermediate ring in synthetic rubber (Perbunan; Pb) damps impacts and torsional vibration and is electrically conductive, so that undesired static charging is avoided. The coupling can be used in any direction of rotation and installation position.

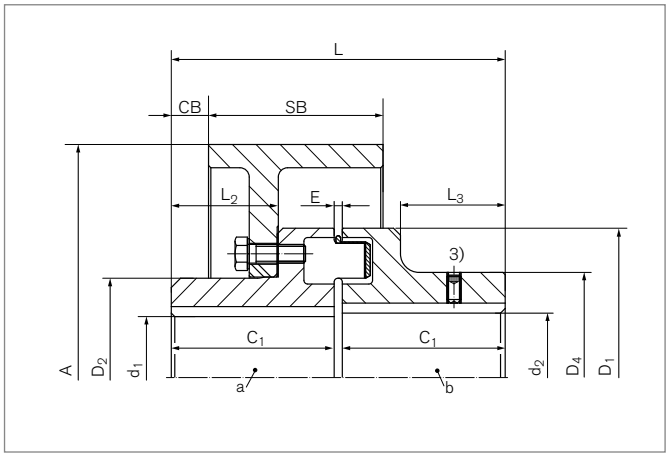


## Characteristics

- Torsionally flexible, compensate for angular, radial and axial shaft misalignment
- Pre-compressed individual buffers connected to an intermediate ring
- Intermediate rings of different Shore hardness levels (standard Pb72, hard Pb82), can be used from –30 °C to +100 °C
- Brake drum in GGG, other materials on request
- Change of the elastic intermediate ring with shift of the connected aggregates.
- Bores up to 230 mm
- Torques up to $T_{Kn}$ = 41000 Nm / $T_{Kmax}$ = 97500 Nm
- Speeds up to $n_{max}$ = 5000 $min^{-1}$

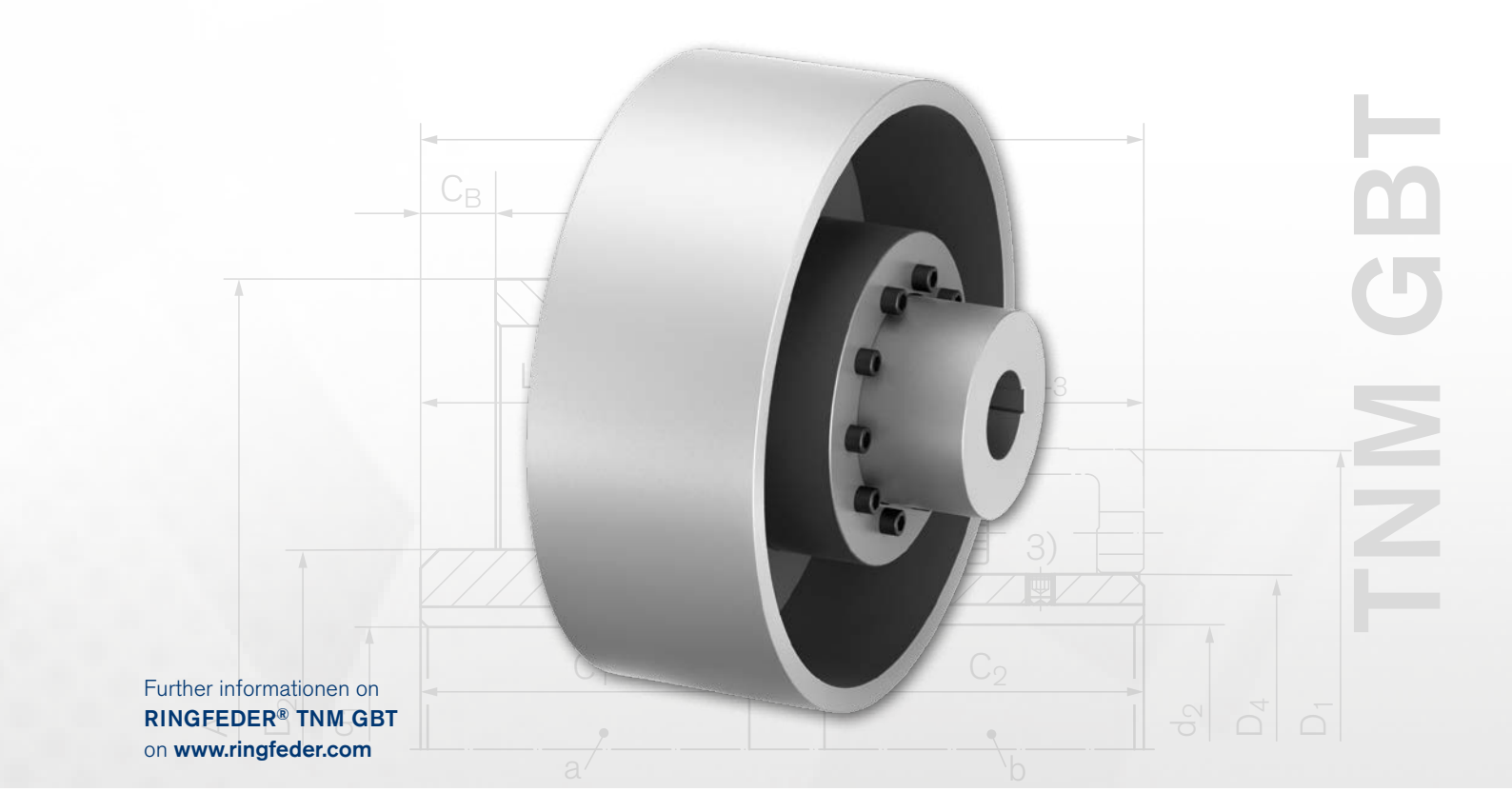


# Multi-part design, to change the intermediate ring without axial movement of the driven parts with brake drum acc. to DIN 15431

Die **RINGFEDER® TNM GBT** is a torsionally elastic and puncture-proof jaw coupling with brake drum and a movable jaw ring. It balances out angular, radial and axial shaft offset within determined tolerances. The coupling transmits the torque via pre-compressed, elastic buffers in synthetic rubber (Perbunan; Pb) that are connected to one another into an intermediate ring. The elastic intermediate ring in synthetic rubber (Perbunan; Pb) damps impacts and torsional vibration and is electrically conductive, so that undesired static charging is avoided. The coupling can be used in any direction of rotation and installation position. Easy separation of the coupled machines is possible because one coupling half is in two sections. The rotational direction of the drive can be inspected when the jaw ring is pushed back. One coupling half can also be lifted out radially with the corresponding aggregate. The elastic intermediate ring can be changed without shifting the machines axially.

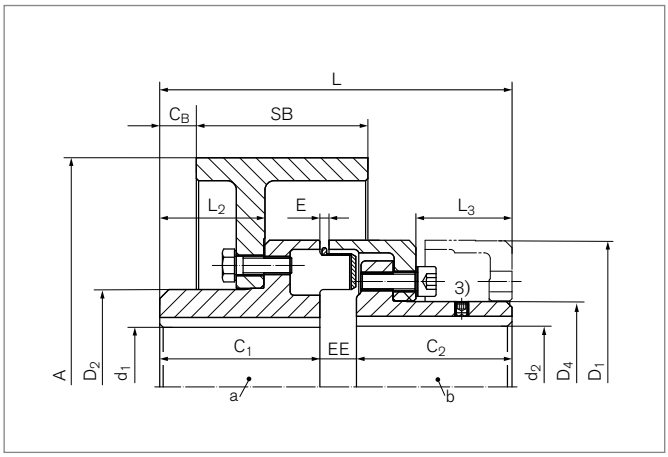


## Characteristics

- Torsionally flexible, compensate for angular, radial and axial shaft misalignment
- Pre-compressed individual buffers connected to an intermediate ring
- Intermediate rings of different Shore hardness levels (standard Pb72, hard Pb82), can be used from –30 °C to +100 °C
- Brake drum in GGG, other materials on request
- Change of the elastic intermediate ring without shift of the connected aggregates.
- Bores up to 280 mm
- Torques up to $T_{Kn}$ = 41000 Nm / $T_{Kmax}$ = 97500 Nm
- Speeds up to $n_{max}$ = 5000 $min^{-1}$

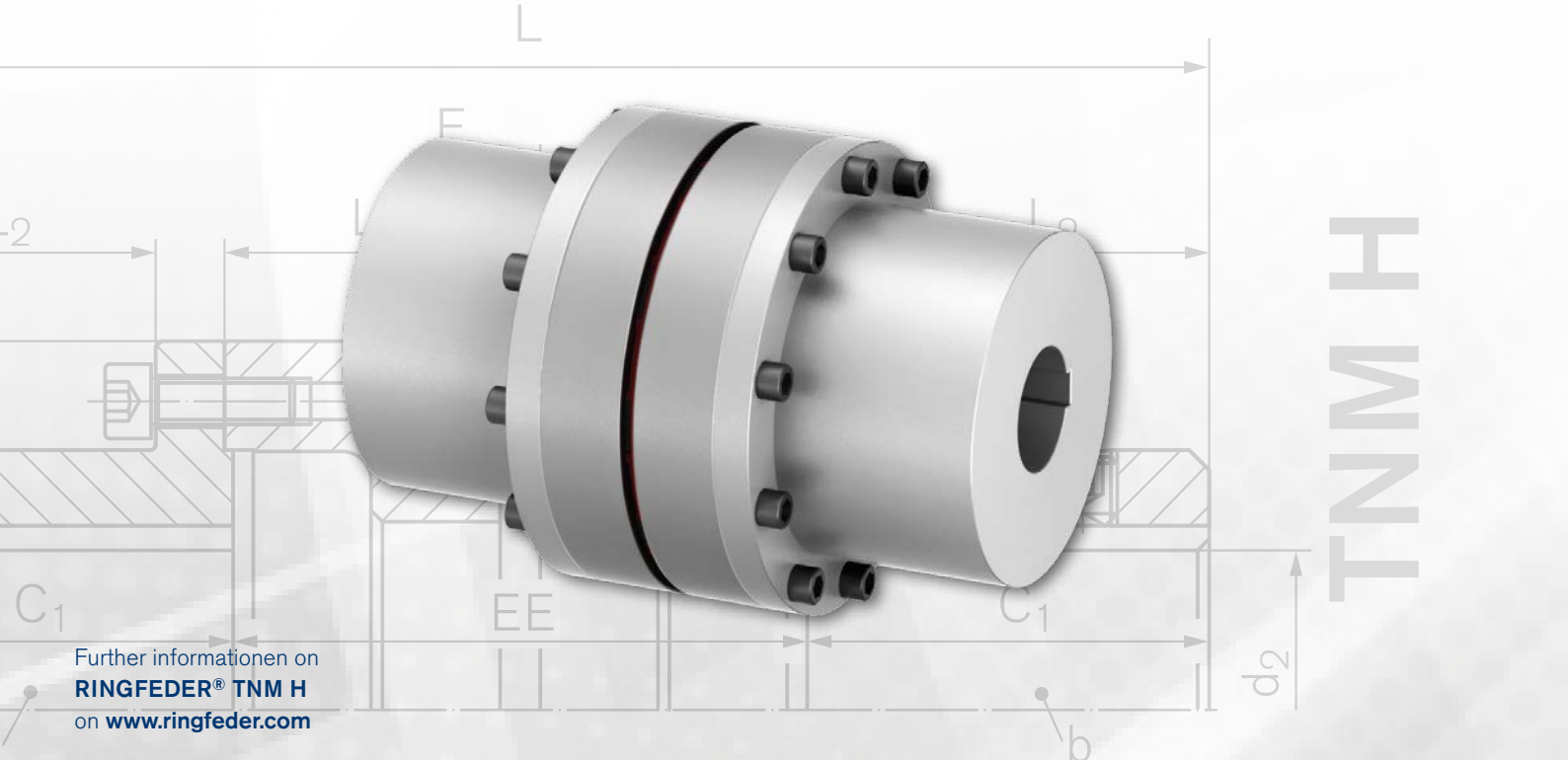


Further informationen on
**RINGFEDER® TNM H**
on **www.ringfeder.com**

# Multi-part design, to remove the intermediate spacer. Disassembly of the pump impeller without axial movement of the driven parts

Die **RINGFEDER® TNM H** is a torsionally elastic and puncture-proof jaw coupling with an intermediate piece that can be lifted out, primarily for pump drives. It balances out angular, radial and axial shaft offset within determined tolerances. The coupling transmits the torque via pre-compressed, elastic buffers in synthetic rubber (Perbunan; Pb) that are connected to one another into an intermediate ring. The elastic intermediate ring in synthetic rubber (Perbunan; Pb) damps impacts and torsional vibration and is electrically conductive, so that undesired static charging is avoided. The coupling can be used in any direction of rotation and installation position. Radial installation and removal of the intermediate sleeve are possible because both coupling halves are in two sections. The dismounting dimension between the flange hubs is available to change the elastic intermediate ring or removal of the bearing bracket of a centrifugal pump without moving the motor. When the intermediate sleeve has been dismounted it is also simple to carry out a check on the rotational direction of the drive.

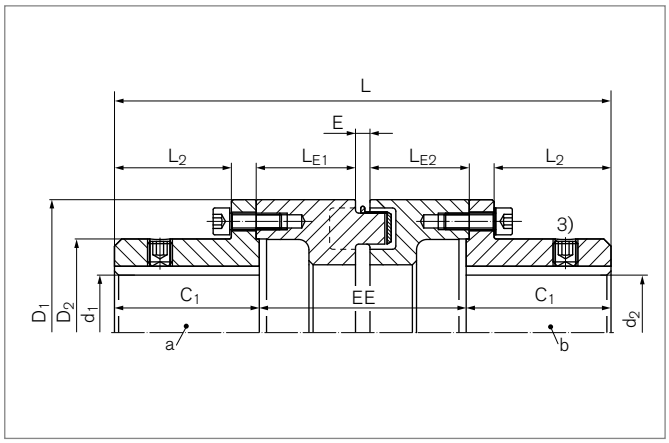


## Characteristics

- Torsionally flexible, compensate for angular, radial and axial shaft misalignment
- Pre-compressed individual buffers connected to an intermediate ring
- Intermediate rings of different Shore hardness levels (standard Pb72, hard Pb82), can be used from –30 °C to +100 °C
- Removal of the intermediate pieces and changing of the elastic intermediate ring without moving the connected aggregates.
- Bores up to 150 mm
- Torques up to $T_{Kn}$ = 9900 Nm / $T_{Kmax}$ = 23400 Nm
- Speeds up to $n_{max}$ = 10000 $min^{-1}$

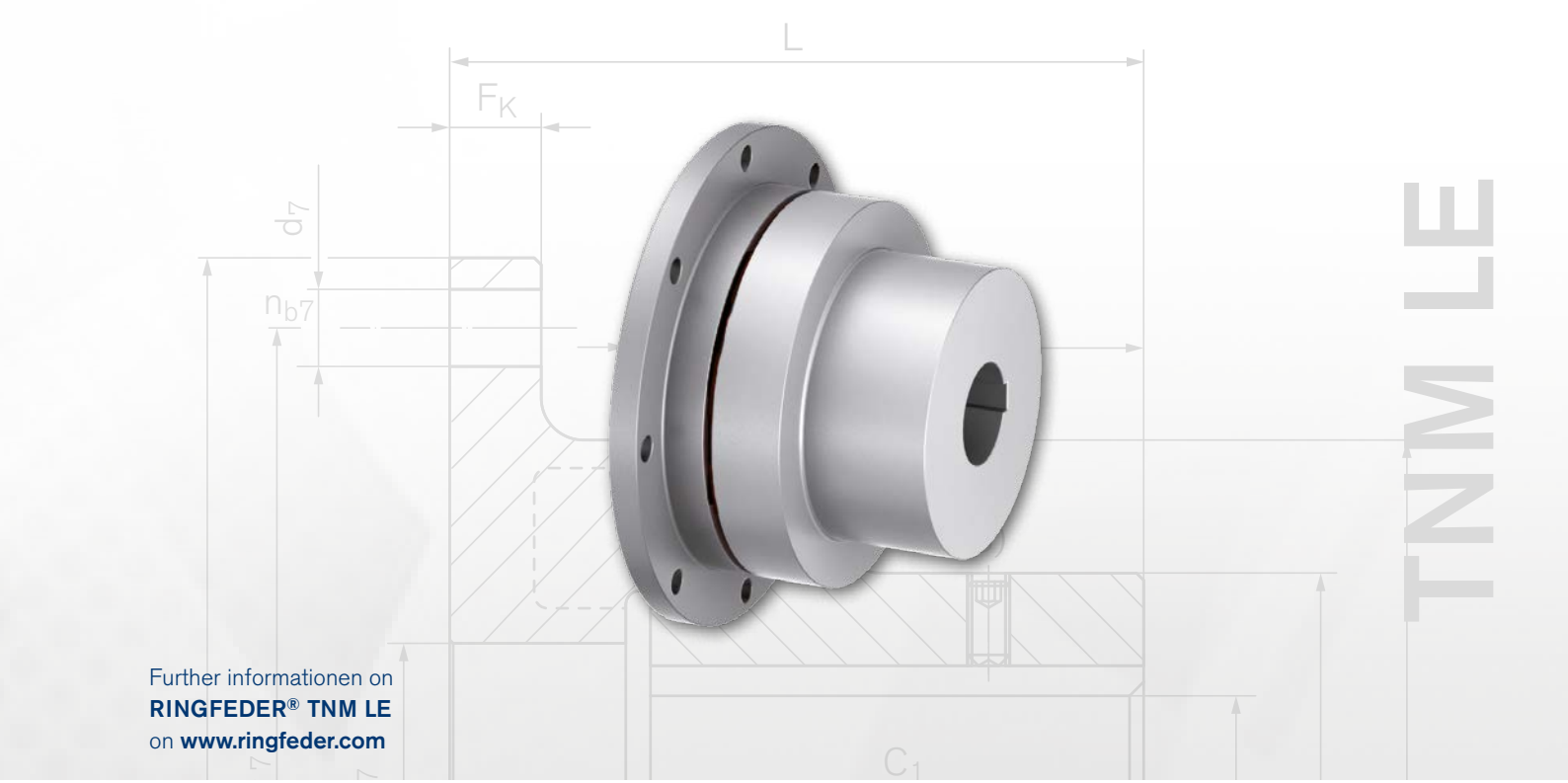


Further informationen on
**RINGFEDER® TNM LE**
on **www.ringfeder.com**

## One part design with flange, externally centred

The **RINGFEDER® TNM LE** is a torsionally elastic and puncture-proof jaw coupling with screw-down flange. It balances out angular, radial and axial shaft offset within determined tolerances. The coupling transmits the torque via pre-compressed, elastic buffers in synthetic rubber (Perbunan; Pb) that are connected to one another into an intermediate ring. The elastic intermediate ring in synthetic rubber (Perbunan; Pb) damps impacts and torsional vibration and is electrically conductive, so that undesired static charging is avoided. The coupling can be used in any direction of rotation and installation position.

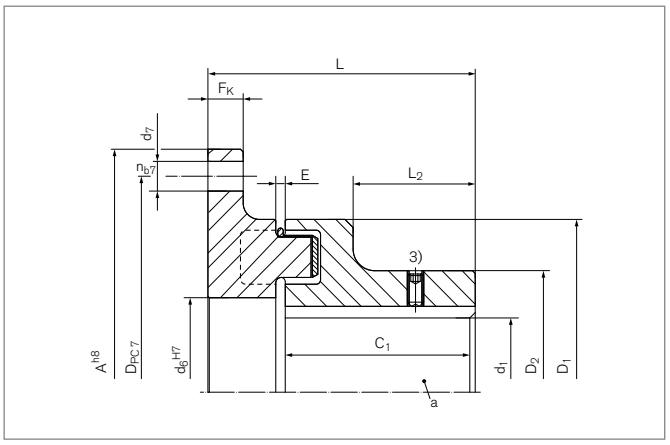


### Characteristics

- Torsionally flexible, compensate for angular, radial and axial shaft misalignment
- Pre-compressed individual buffers connected to an intermediate ring
- Intermediate rings of different Shore hardness levels (standard Pb72, hard Pb82), can be used from –30 °C to +100 °C
- Changing of the elastic intermediate ring with movement of the connected aggregates.
- Bores up to 230 mm
- Torques up to $T_{Kn}$ = 41000 Nm / $T_{Kmax}$ = 97500 Nm
- Speeds up to $n_{max}$ = 10000 $min^{-1}$

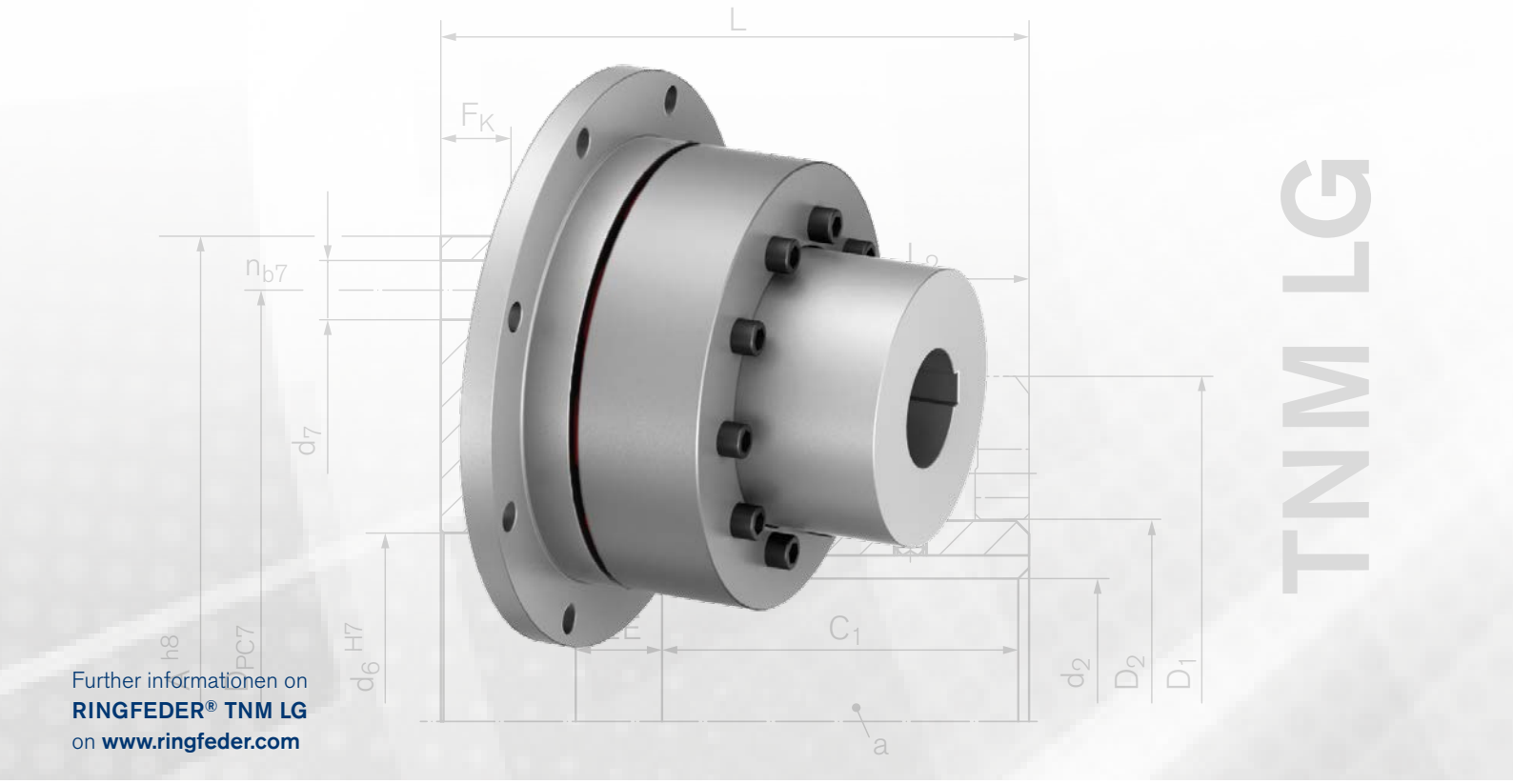


Further informationen on
**RINGFEDER® TNM LG**
on **www.ringfeder.com**

# Multi-part design, to change the intermediate ring without axial movement of the driven parts with flange, externally centred

The **RINGFEDER® TNM LG** is a torsionally elastic and puncture-proof jaw coupling with screw-down flange and moveable jaw ring. It balances out angular, radial and axial shaft offset within determined tolerances. The coupling transmits the torque via pre-compressed, elastic buffers in synthetic rubber (Perbunan; Pb) that are connected to one another into an intermediate ring. The elastic intermediate ring in synthetic rubber (Perbunan; Pb) damps impacts and torsional vibration and is electrically conductive, so that undesired static charging is avoided. The coupling can be used in any direction of rotation and installation position. Easy separation of the coupled machines is possible because one coupling half is in two sections. The rotational direction of the drive can be inspected when the jaw ring is pushed back. One coupling half can also be lifted out radially with the corresponding aggregate. The elastic intermediate ring can be changed without shifting the machines axially.

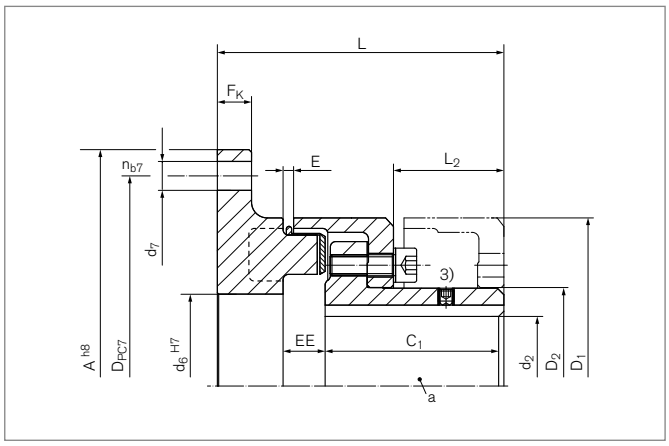


## Characteristics

- Torsionally flexible, compensate for angular, radial and axial shaft misalignment
- Pre-compressed individual buffers connected to an intermediate ring
- Intermediate rings of different Shore hardness levels (standard Pb72, hard Pb82), can be used from –30 °C to +100 °C
- Changing of the elastic intermediate ring without moving the connected aggregates.
- Bores up to bis 280 mm
- Torques up to $T_{Kn}$ = 41000 Nm / $T_{Kmax}$ = 97500 Nm
- Speeds up to $n_{max}$ = 8000 $min^{-1}$

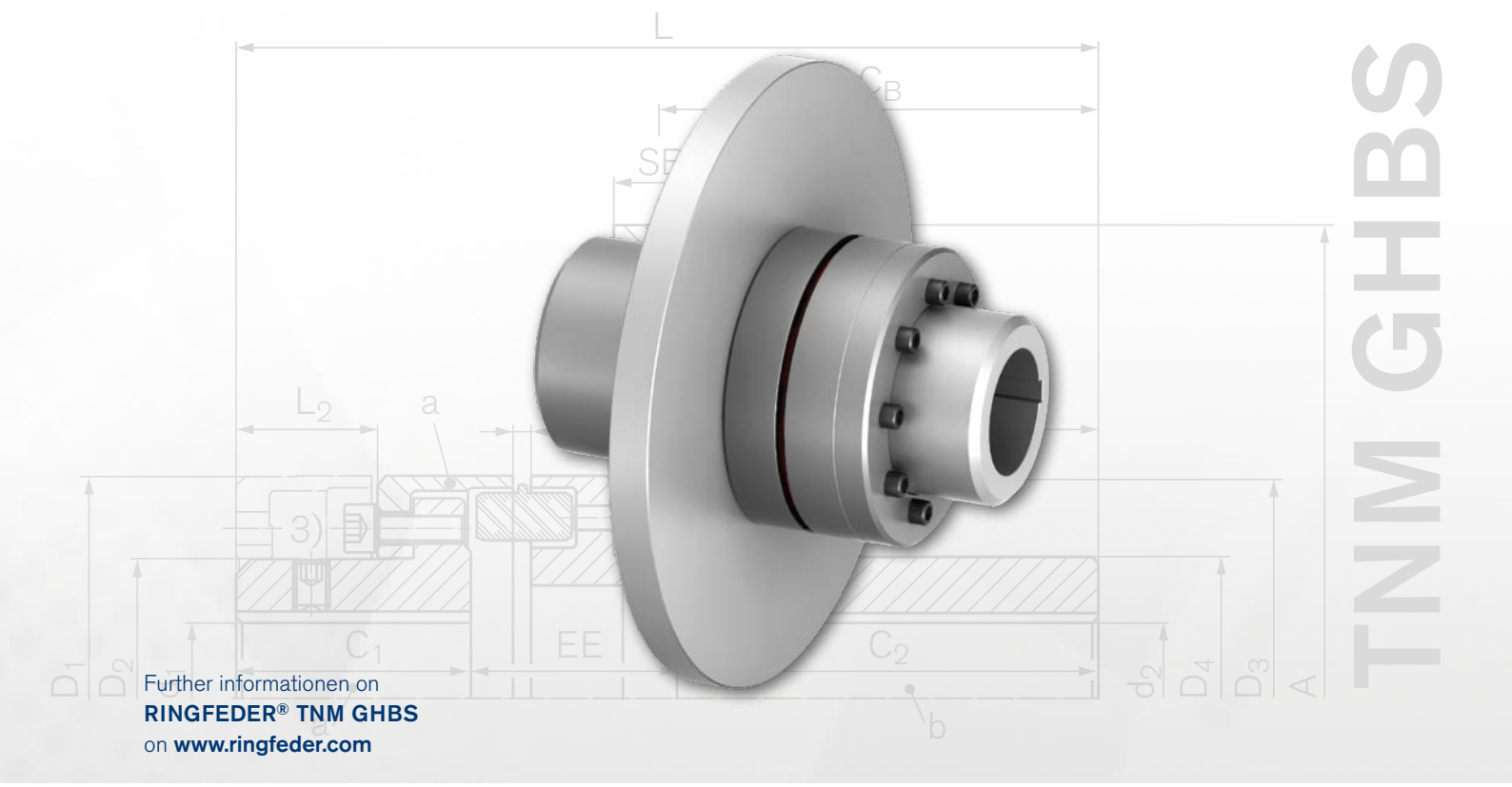


Further informationen on
**RINGFEDER® TNM GHBS**
on **www.ringfeder.com**

## With brake disc in steel, multi-part design, to change the intermediate ring and the brake disc without axial movement of the driven parts

The **RINGFEDER® TNM GHBS** is a torsionally elastic and puncture-proof jaw coupling with brake disc and moveable jaw ring. It balances out angular, radial and axial shaft offset within determined tolerances. The coupling transmits the torque via pre-compressed, elastic buffers in synthetic rubber (Perbunan; Pb) that are connected to one another into an intermediate ring. The elastic intermediate ring in synthetic rubber (Perbunan; Pb) damps impacts and torsional vibration and is electrically conductive, so that undesired static charging is avoided. The coupling can be used in any direction of rotation and installation position. Easy separation of the coupled machines is possible because one coupling half is in two sections. The rotational direction of the drive can be inspected when the jaw ring is pushed back. One coupling half can also be lifted out radially with the corresponding aggregate. The elastic intermediate ring and the brake disc can be changed without shifting the machines axially.

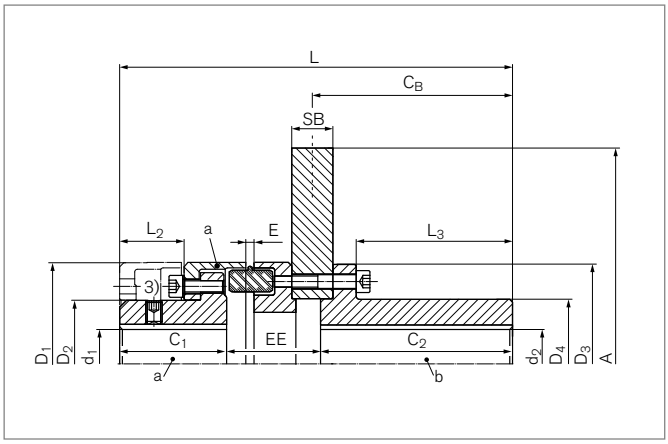


### Characteristics

- Torsionally flexible, compensate for angular, radial and axial shaft misalignment
- Pre-compressed individual buffers connected to an intermediate ring
- Intermediate rings of different Shore hardness levels (standard Pb72, hard Pb82), can be used from –30 °C to +100 °C
- Changing of the elastic intermediate ring and the brake disc without moving the connected aggregates.
- Bores up to 150 mm
- Torques up to $T_{Kn}$ = 7550 Nm / $T_{Kmax}$ = 10500 Nm
- Speeds up to $n_{max}$ = 2250 $min^{-1}$

# TNS

# Elastomer Jaw Couplings

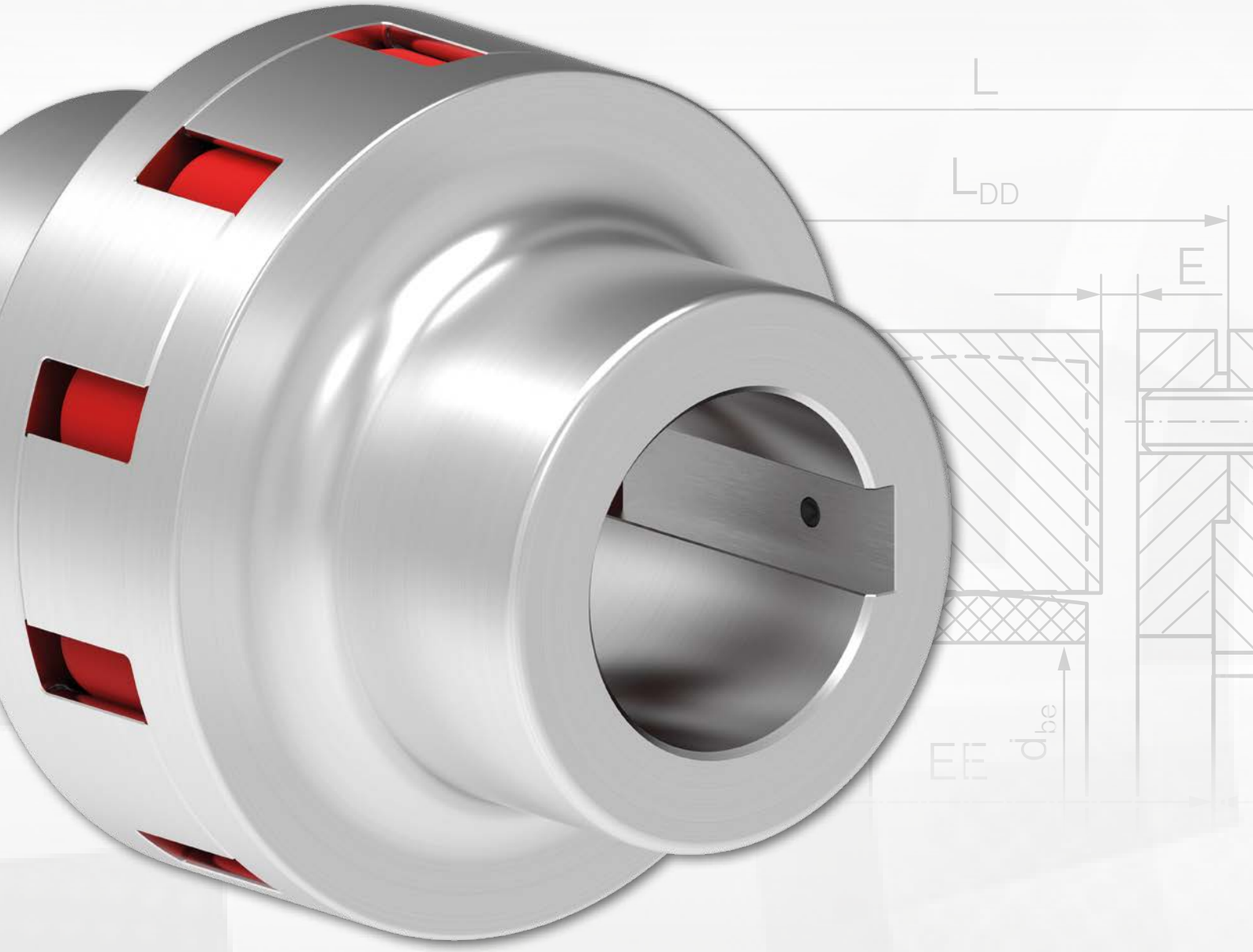


## Elastomer Jaw Couplings RINGFEDER® TNS

RINGFEDER® TNS jaw couplings are used primarily as robust known drive components in heavy load areas such as drives in mining and ore production machines, in smelting and steelworks technology, cement works, as a connection coupling in bridge, container and casting cranes or in connection with fluid couplings in conveyor belt drives.

## Characteristics · Advantages

- Torsionally flexible
- Damping of torsional vibrations
- Blind connection
- High breakage resistance through stable jaw design
- Many variations with modular design
- Large volume elastomers of different hardness levels are joined to an intermediate ring
- Max. Torque: 12–40 050 Nm

## Basic information

Intermediate rings are available in four different material hardness levels (in Perbunan Pb72 and Pb82, in Vulkollan VkR and Vk60D) for each coupling size. The harder the intermediate ring the higher the transmittable torque but also the higher the torsion spring stiffness. The nominal torque given in the data table for the $T_{KN}$ coupling can be transmitted continuously. The maximum coupling torque $T_{Kmax}$ can be transmitted briefly up to $10^5$ times, for example as occurs during start-up.

Torsional vibration analyses (TVA) are performed by specialists to optimize the drive line. To this purpose, a detailed description of the oscillatory system is required, including the mechanical arrangement (spring-mass system) as well as the plant-related excitation functions. The specific coupling data such as stiffness, damping and mass moments of inertia will be supplied on request.

| | Torque with following buffer | | | | | | | |
|---|---|---|---|---|---|---|---|---|
| | Nm | | Nm | | Nm | | Nm | |
| | Pb72 | | Pb82 | | VkR | | Vk60D | |
| Size | $T_{KN}$ | $T_{Kmax}$ | $T_{KN}$ | $T_{Kmax}$ | $T_{KN}$ | $T_{Kmax}$ | $T_{KN}$ | $T_{Kmax}$ |
| 50 | 4 | 12 | 7,3 | 22 | 15 | 40 | - | - |
| 70 | 16 | 48 | 29 | 87 | 55 | 160 | - | - |
| 85 | 24 | 72 | 40 | 120 | 75 | 225 | 110 | 330 |
| 100 | 40 | 120 | 70 | 210 | 130 | 390 | 195 | 585 |
| 125 | 70 | 210 | 128 | 385 | 250 | 750 | 370 | 1110 |
| 145 | 120 | 360 | 220 | 660 | 400 | 1200 | 600 | 1800 |
| 170 | 180 | 540 | 340 | 1020 | 630 | 1900 | 950 | 2850 |
| 200 | 330 | 990 | 590 | 1770 | 1100 | 3300 | 1650 | 4950 |
| 230 | 500 | 1500 | 900 | 2700 | 1700 | 5150 | 2580 | 7740 |
| 260 | 800 | 2400 | 1400 | 4200 | 2650 | 7950 | 3980 | 11940 |
| 300 | 1180 | 3540 | 2090 | 6270 | 3900 | 11070 | 5850 | 17550 |
| 360 | 1940 | 5820 | 3450 | 10350 | 6500 | 19500 | 9700 | 29100 |
| 400 | 2670 | 8010 | 4750 | 14250 | 8900 | 26700 | 13350 | 40050 |

$T_{KN}$ = Nominal torque of coupling

$T_{Kmax}$ = Max. torque of the coupling by one part design

**Notes:**

- Version based on type RINGFEDER® TNS S-St and flexible element VkR.
- Applies for small and medium moments of inertia on the output side.

## Allocation of the RINGFEDER® TNS couplings to IEC standard motors Protection rating IP 54/IP 55 (intermediate ring VkR)

for rough determination of the coupling size in accordance with operating factors.

| Size | Engine | kW n= 3.000 min$^{-1}$ | Coupling size | kW n= 1.500 min$^{-1}$ | Coupling size | kW n= 1.000 min$^{-1}$ | Coupling size | kW n= 750 min$^{-1}$ | Coupling size | Cyl. shaft end Ø x L by rotary speed of = 3000 min$^{-1}$ | ≤ 3000 min$^{-1}$ |
|---|---|---|---|---|---|---|---|---|---|---|---|
| 56 | - | 0,09 | 50 | 0,06 | 50 | 0,037 | 50 | - | - | 9 x 20 | 9 x 20 |
| 56 | - | 0,12 | 50 | 0,09 | 50 | 0,045 | 50 | - | - | 9 x 20 | 9 x 20 |
| 63 | - | 0,18 | 50 | 0,12 | 50 | 0,06 | 50 | - | - | 11 x 23 | 11 x 23 |
| 63 | - | 0,25 | 50 | 0,18 | 50 | 0,09 | 50 | - | - | 11 x 23 | 11 x 23 |
| 71 | - | 0,37 | 50 | 0,25 | 50 | 0,18 | 50 | 0,09 | 50 | 14 x 30 | 14 x 30 |
| 71 | - | 0,55 | 50 | 0,37 | 50 | 0,25 | 50 | 0,12 | 50 | 14 x 30 | 14 x 30 |
| 80 | - | 0,75 | 50 | 0,55 | 50 | 0,37 | 50 | 0,18 | 50 | 19 x 40 | 19 x 40 |
| 80 | - | 1,1 | 50 | 0,75 | 50 | 0,55 | 50 | 0,25 | 50 | 19 x 40 | 19 x 40 |
| 90 | S | 1,5 | 50 | 1,1 | 50 | 0,75 | 50 | 0,37 | 50 | 24 x 50 | 24 x 50 |
| 90 | L | 2,2 | 50 | 1,5 | 50 | 1,1 | 50 | 0,55 | 50 | 24 x 50 | 24 x 50 |
| 100 | L | 3 | 70 | 2,2 | 70 | 1,5 | 70 | 0,75 | 70 | 28 x 60 | 28 x 60 |
| 100 | L | - | - | 3 | 70 | - | - | 1,1 | 70 | 28 x 60 | 28 x 60 |
| 112 | M | 4 | 70 | 4 | 70 | 2,2 | 70 | 1,5 | 70 | 28 x 60 | 28 x 60 |
| 132 | S | 5,5 | 70 | 5,5 | 70 | 3 | 70 | 2,2 | 70 | 38 x 80 | 38 x 80 |
| 132 | S | 7,5 | 70 | - | - | - | - | - | - | 38 x 80 | 38 x 80 |
| 132 | M | - | - | 7,5 | 85 | 4 | 70 | 3 | 70 | 38 x 80 | 38 x 80 |
| 132 | M | - | - | - | - | 5,5 | 85 | - | - | 38 x 80 | 38 x 80 |
| 160 | M | 11 | 100 | 11 | 100 | 7,5 | 100 | 4 | 100 | 42 x 110 | 42 x 110 |

Continuation see next page

| Size | Engine | kW n= 3.000 min-1 | Coupling size | kW n= 1.500 min-1 | Coupling size | kW n= 1.000 min-1 | Coupling size | kW n= 750 min-1 | Coupling size | Cyl. shaft end Ø x L by rotary speed of = 3000 min-1 | ≤ 3000 min-1 |
|---|---|---|---|---|---|---|---|---|---|---|---|
| 160 | M | 15 | 100 | - | - | - | - | 5,5 | 100 | 42 x 110 | 42 x 110 |
| 160 | L | 18,5 | 100 | 15 | 100 | 11 | 125 | 7,5 | 100 | 42 x 110 | 42 x 110 |
| 180 | M | 22 | 125 | 18,5 | 125 | - | - | - | - | 48 x 110 | 48 x 110 |
| 180 | L | - | - | 22 | 125 | 15 | 125 | 11 | 125 | 48 x 110 | 48 x 110 |
| 200 | L | 30 | 125 | 30 | 125 | 18,5 | 125 | 15 | 125 | 55 x 110 | 55 x 110 |
| 200 | L | 37 | 125 | - | - | 22 | 145 | - | - | 55 x 110 | 55 x 110 |
| 225 | S | - | - | 37 | 145 | - | - | 18,5 | 145 | 55 x 110 | 60 x 140 |
| 225 | M | 45 | 125 | 45 | 145 | 30 | 145 | 22 | 145 | 55 x 110 | 60 x 140 |
| 250 | M | 55 | 145 | 55 | 170 | 37 | 170 | 30 | 170 | 60 x 140 | 65 x 140 |
| 280 | S | 75 | 145 | 75 | 170 | 45 | 170 | 37 | 170 | 65 x 140 | 75 x 140 |
| 280 | M | 90 | 145 | 90 | 200 | 55 | 200 | 45 | 200 | 65 x 140 | 75 x 140 |
| 315 | S | 110 | 170 | 110 | 200 | 75 | 200 | 55 | 200 | 65 x 140 | 80 x 170 |
| 315 | M | 132 | 170 | 132 | 200 | 90 | 230 | 75 | 230 | 65 x 140 | 80 x 170 |
| 315 | L | 160 | 200 | 160 | 230 | 110 | 230 | 90 | 230 | 65 x 140 | 80 x 170 |
| 315 | L | 200 | 200 | 200 | 230 | 132 | 230 | 110 | 260 | 65 x 140 | 80 x 170 |
| 315 | L | - | - | - | - | 160 | 260 | 132 | 260 | 65 x 140 | 80 x 170 |
| 315 | - | 250 | 200 | 250 | 260 | 200 | 260 | 160 | 260 | 65 x 140 | 85 x 170 |
| 315 | - | 315 | 230 | 315 | 260 | 250 | 300 | 200 | 300 | 65 x 140 | 85 x 170 |
| 355 | - | 355 | 230 | 355 | 300 | 315 | 360 | 250 | 360 | 75 x 140 | 95 x 170 |
| 355 | - | 400 | 230 | 400 | 300 | 400 | 360 | 315 | 360 | 75 x 140 | 95 x 170 |
| 355 | - | 500 | 230 | 500 | 360 | - | - | - | - | 75 x 140 | 95 x 170 |
| 400 | - | 560 | 260 | 560 | 360 | 450 | 360 | 355 | 360 | 80 x 170 | 110 x 210 |
| 400 | - | 630 | 260 | 630 | 360 | 500 | 360 | 400 | 400 | 80 x 170 | 110 x 210 |
| 400 | - | 710 | 260 | 710 | 360 | 560 | 400 | 450 | 400 | 80 x 170 | 110 x 210 |
| 450 | - | 800 | - | 800 | 400 | 630 | 400 | 500 | 400 | 90 x 170 | 120 x 210 |
| 450 | - | 900 | - | 900 | 400 | 710 | 400 | 560 | - | 90 x 170 | 120 x 210 |
| 450 | - | 1000 | - | 1000 | 400 | 800 | - | 630 | - | 90 x 170 | 120 x 210 |

The allocation of the couplings takes place based on the type RINGFEDER® TNS S-St – VkR and takes into account a uniform torque at the operating point (minimum operating factor 1.25) with low variation and slight shocks and is valid up to an ambient temperature of +30 °C.

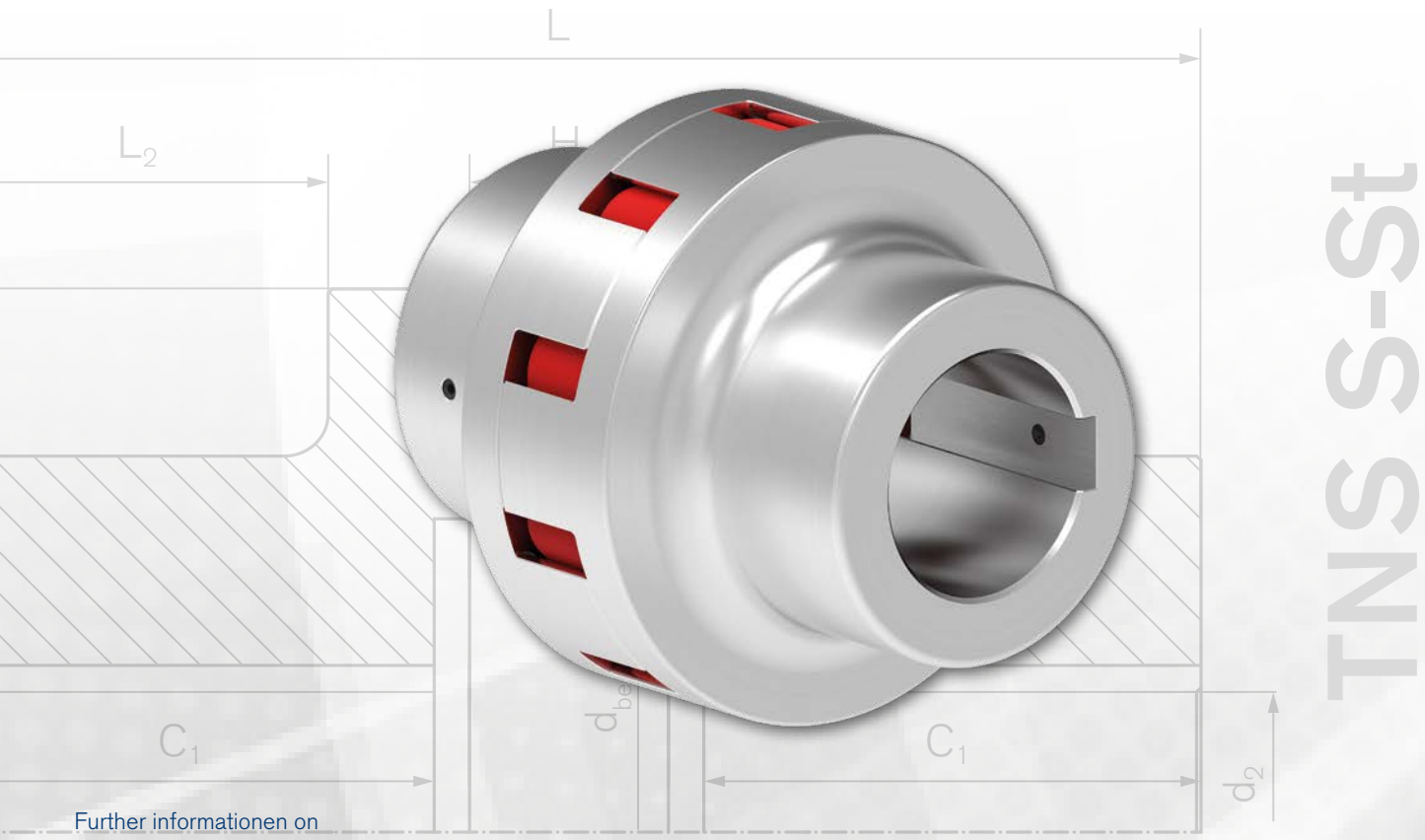


Further informationen on
**RINGFEDER® TNS S-St**
on **www.ringfeder.com**

## Coupling with standard hubs

The **RINGFEDER® TNS S-St** is a torsionally elastic and puncture-proof jaw coupling. It balances out angular, radial and axial shaft offset within determined tolerances. The coupling transmits the torque via pre-compressed, elastic buffers in synthetic rubber (Pb) or polyurethane (Vk), in standard VkR, that are connected to one another to an intermediate ring. The elastic intermediate ring can damp impacts and torsional vibrations and is oil resistant. The coupling can be used in any direction of rotation and installation position.

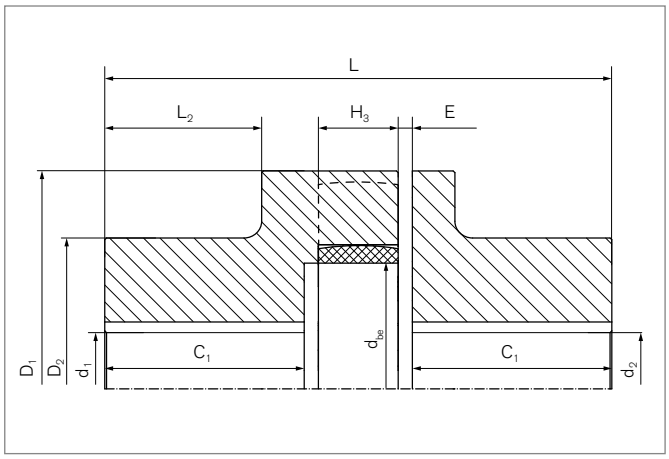


### Characteristics

- The intermediate ring can be replaced after shifting a shaft with fitted hub.
- Torsionally flexible, compensate for angular, radial and axial shaft offset
- Optimisation of the vibration damping with different hardness levels of the intermediate ring, usable from –30 °C to +100 °C.
- Standard material for intermediate ring: VkR
- Compact design because of pre-compressed intermediate rings
- Outer diameter up to 400 mm, Bohrung bis max. 160 mm
- Torques up to $T_{KN}$ = 13350 Nm / $T_{Kmax}$ = 40050 Nm

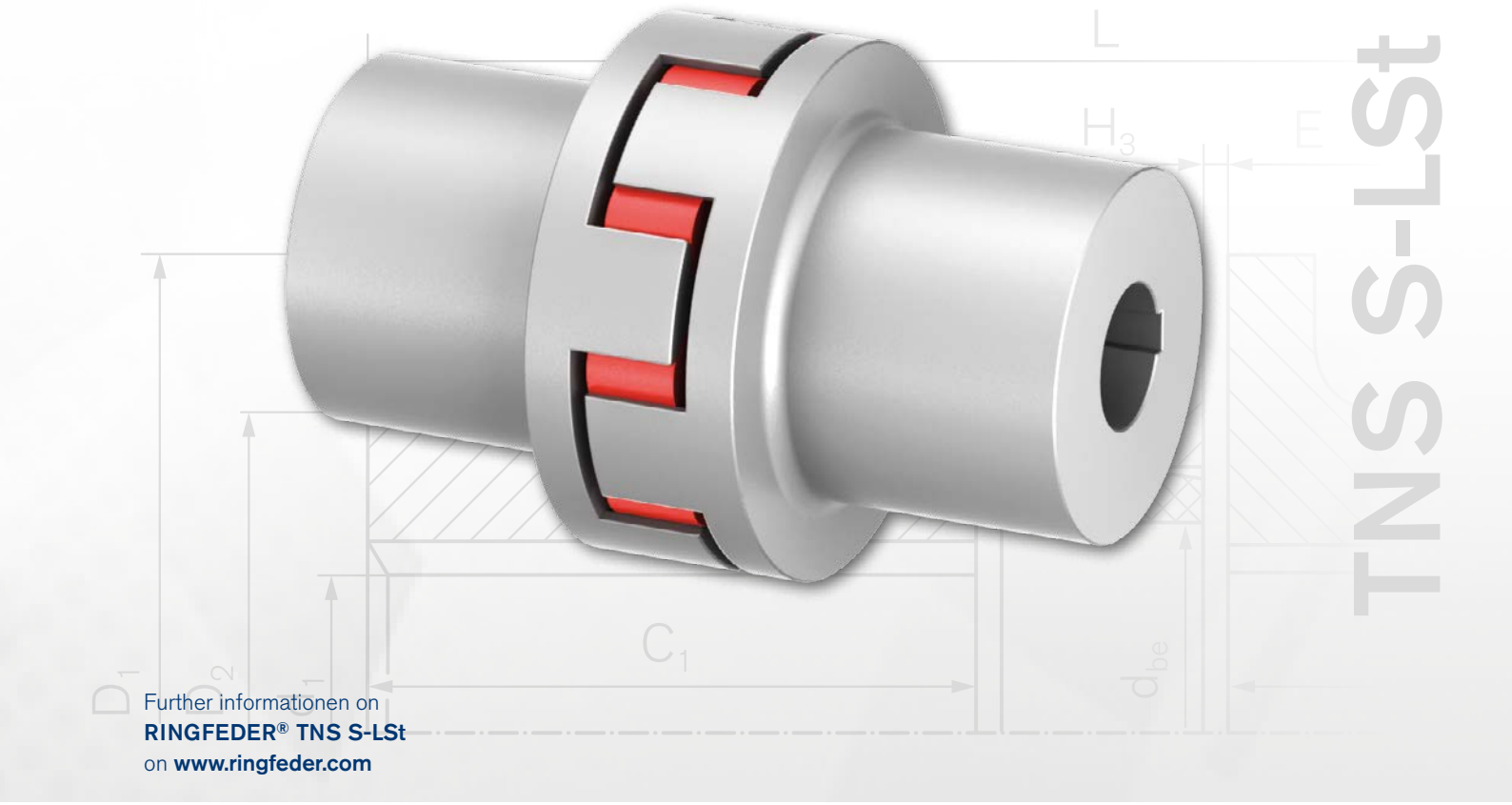


Further informationen on
**RINGFEDER® TNS S-LSt**
on **www.ringfeder.com**

## Coupling with extended hubs

The **RINGFEDER® TNS S-LSt** is a torsionally elastic and puncture-proof jaw coupling with extended hubs. It balances out angular, radial and axial shaft offset within determined tolerances. The coupling transmits the torque via pre-compressed, elastic buffers in synthetic rubber (Pb) or polyurethane (Vk), in standard VkR, that are connected to one another to an intermediate ring. The elastic intermediate ring can damp impacts and torsional vibrations and is oil resistant. The coupling can be used in any direction of rotation and installation position.

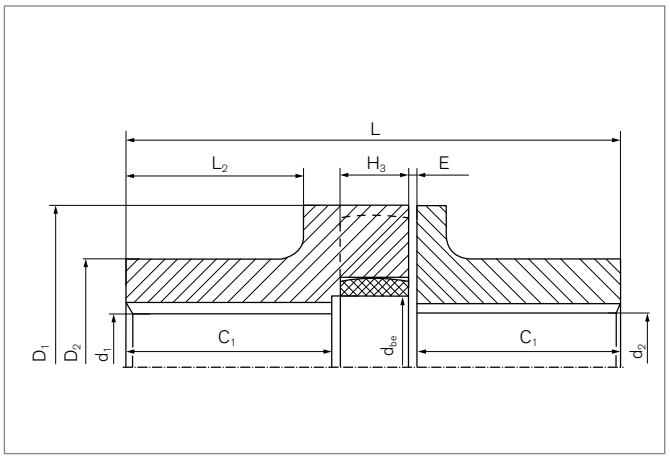


### Characteristics

- The intermediate ring can be replaced after shifting a shaft with fitted hub.
- Torsionally flexible, compensate for angular, radial and axial shaft offset
- Optimisation of the vibration damping with different hardness levels of the intermediate ring, usable from –30 °C to +100 °C.
- Standard material for intermediate ring: VkR
- Compact design because of pre-compressed intermediate rings
- Outer diameter up to 400 mm, Bohrung bis max. 160 mm
- Torques up to $T_{KN}$ = 13350 Nm / $T_{Kmax}$ = 40050 Nm

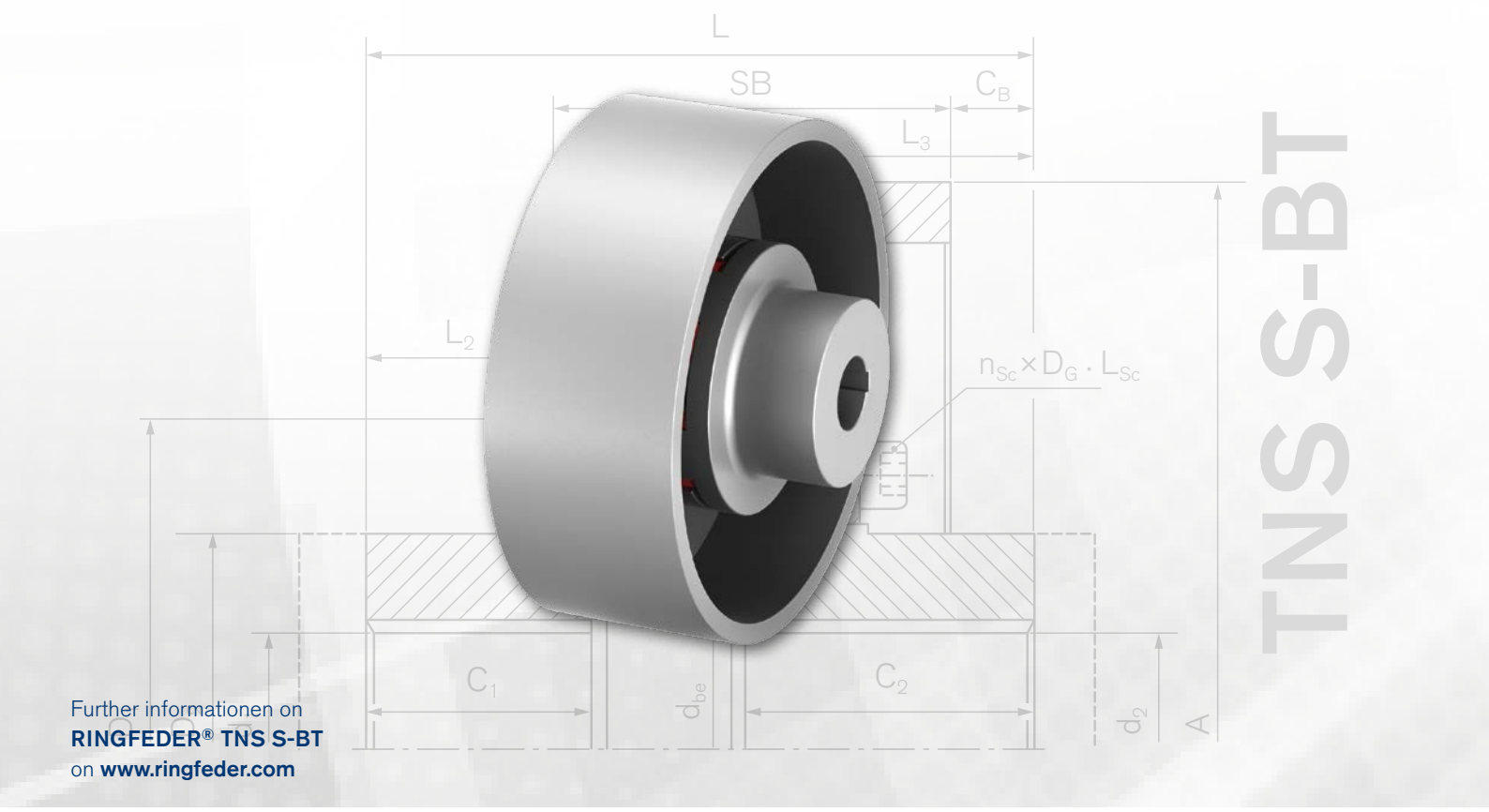


Further informationen on
**RINGFEDER® TNS S-BT**
on **www.ringfeder.com**

## Coupling with standard hub and brake drum

The **RINGFEDER® TNS S-BT** is a torsionally elastic and puncture-proof jaw coupling with attached brake drum. It balances out angular, radial and axial shaft offset within determined tolerances. The coupling transmits the torque via pre-compressed, elastic buffers in synthetic rubber (Pb) or polyurethane (Vk), in standard VkR, that are connected to one another to an intermediate ring. The elastic intermediate ring can damp impacts and torsional vibrations and is oil resistant. The coupling can be used in any direction of rotation and installation position. The brake drum should be connected to the load side.

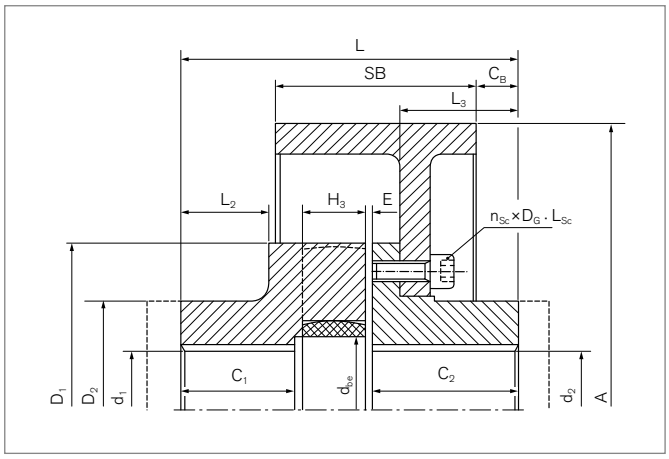


### Characteristics

- The intermediate ring can be replaced after shifting a shaft with fitted hub.
- Torsionally flexible, compensate for angular, radial and axial shaft offset
- Optimisation of the vibration damping with different hardness levels of the intermediate ring, usable from –30 °C to +100 °C.
- Standard material for intermediate ring: VkR
- Compact design because of pre-compressed intermediate rings
- Outer diameter up to 400 mm, Bohrung bis max. 160 mm
- Torques up to $T_{KN}$ = 13350 Nm / $T_{Kmax}$ = 40050 Nm

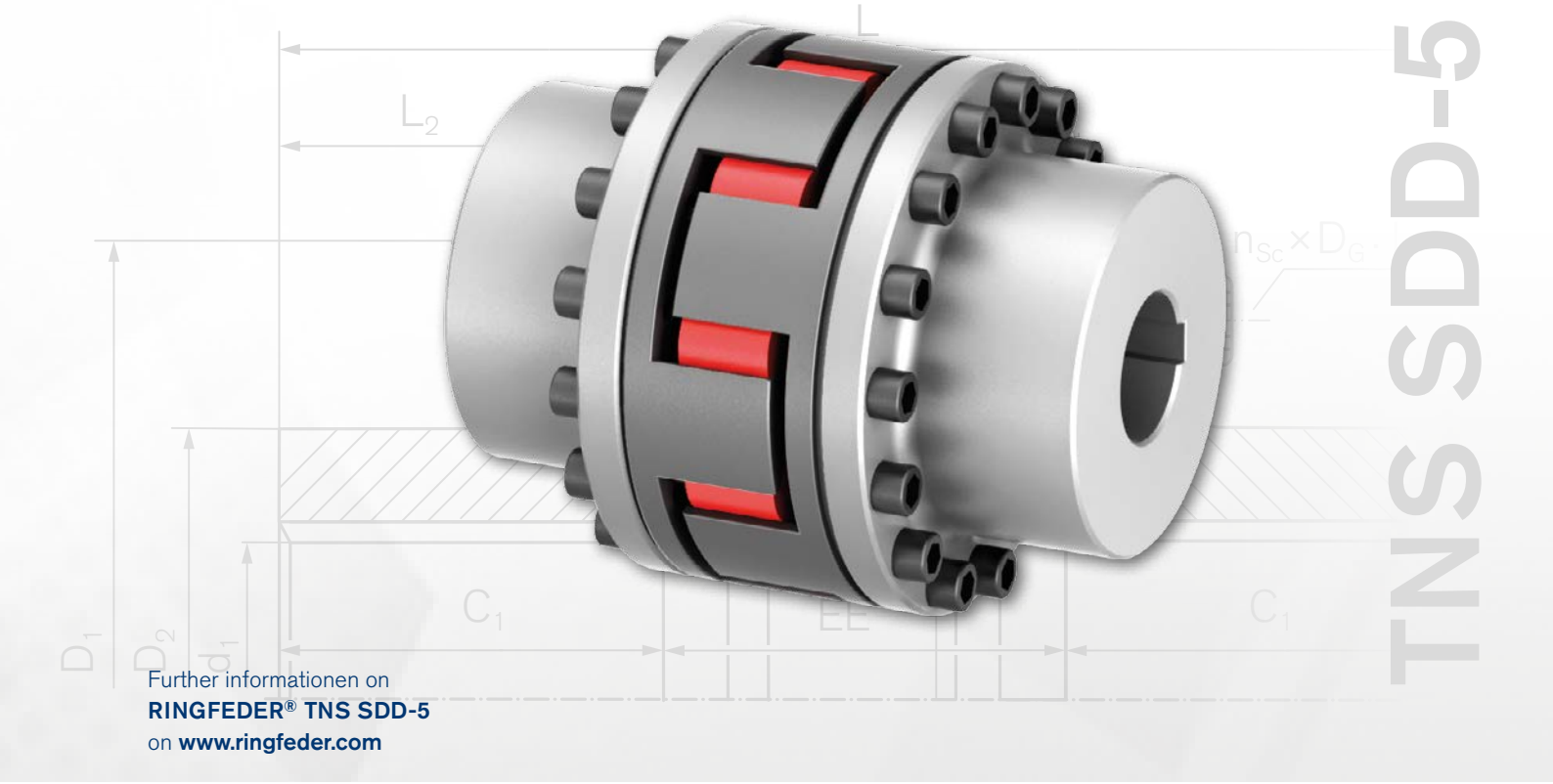


Further informationen on
**RINGFEDER® TNS SDD-5**
on **www.ringfeder.com**

## Coupling with detachable claw rings

The **RINGFEDER® TNS SDD-5** is a torsionally elastic and puncture-proof multi-part jaw coupling with standard flange hubs and removable jaw rings. It balances out angular, radial and axial shaft offset within determined tolerances. The coupling transmits the torque via pre-compressed, elastic buffers in synthetic rubber (Pb) or polyurethane (Vk), in standard VkR, that are connected to one another to an intermediate ring. The elastic intermediate ring can damp impacts and torsional vibrations and is oil resistant. The coupling can be used in any direction of rotation and installation position. Radial installation and removal of the jaw rings are possible because both coupling halves are in two sections. Thus it is possible to change the elastic intermediate ring without moving the aggregates. When the jaw rings have been dismounted it is also simple to carry out a check on the rotational direction of the drive.

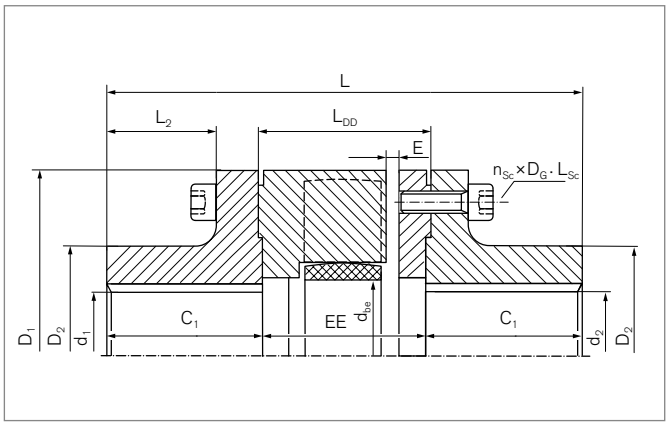


## Characteristics

- The intermediate ring can be exchanged following removal of the jaw rings without moving a shaft.
- Rotational direction can be checked when jaw rings are dismounted
- Simplified assembly and maintenance of the drive line through improved accessibility
- Optimisation of the vibration damping with different hardness levels of the intermediate ring, usable from –30 °C to +100 °C.
- Standard material for intermediate ring: VkR
- Compact design because of pre-compressed intermediate rings
- Outer diameter up to 400 mm, Bohrung bis max. 160 mm
- Torques up to $T_{KN}$ = 13350 Nm / $T_{Kmax}$ = 40050 Nm

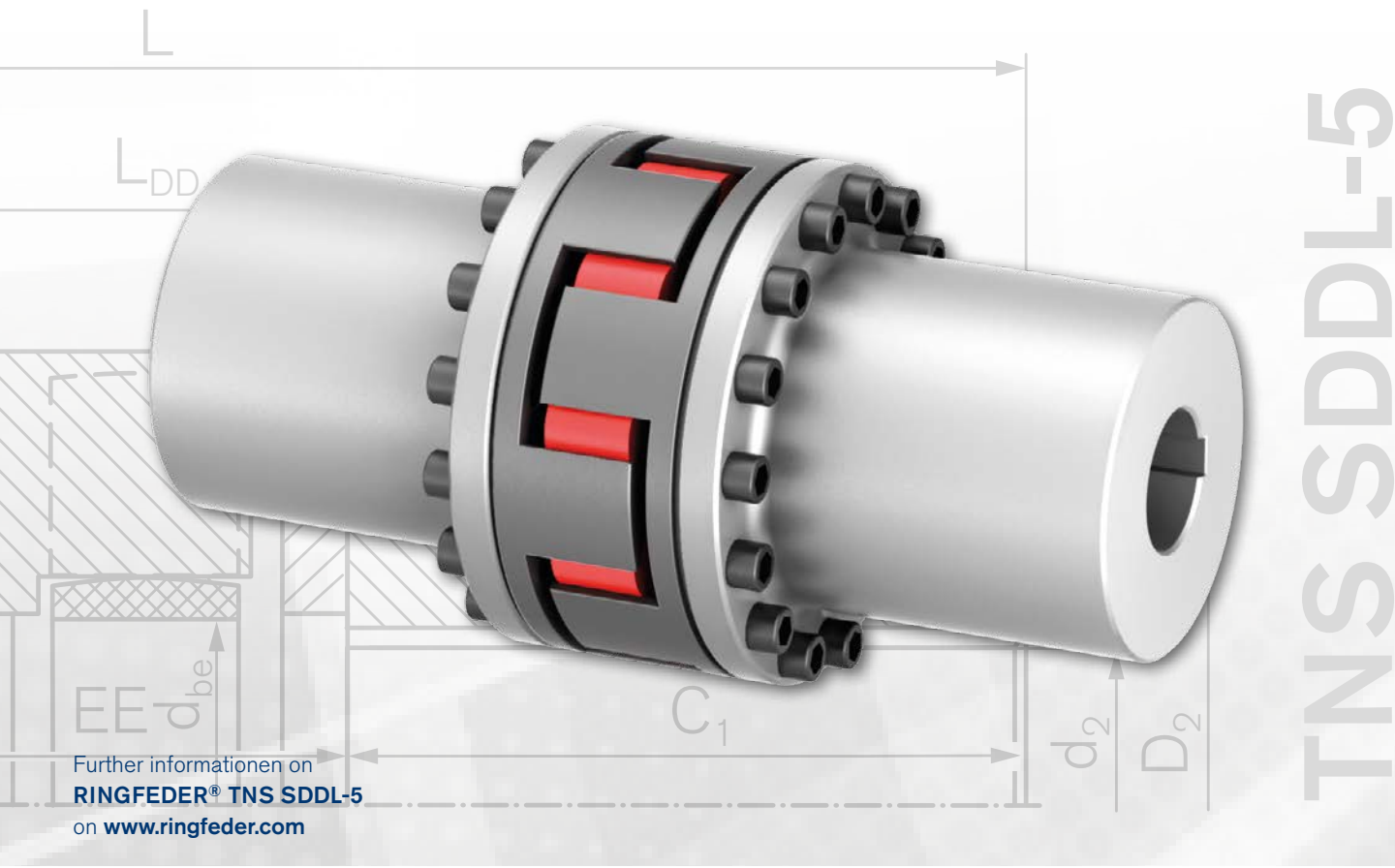


Further informationen on
**RINGFEDER® TNS SDDL-5**
on **www.ringfeder.com**

## Coupling with detachable claw rings and long flange hubs

The **RINGFEDER® TNS SDDL-5** is a torsionally elastic and puncture-proof multi-part jaw coupling with long flange hubs and removable jaw rings. It balances out angular, radial and axial shaft offset within determined tolerances. The coupling transmits the torque via pre-compressed, elastic buffers in synthetic rubber (Pb) or polyurethane (Vk), in standard VkR, that are connected to one another to an intermediate ring. The elastic intermediate ring can damp impacts and torsional vibrations and is oil resistant. The coupling can be used in any direction of rotation and installation position. Radial installation and removal of the jaw rings are possible because both coupling halves are in two sections. Thus it is possible to change the elastic intermediate ring without moving the aggregates. When the jaw rings have been dismounted it is also simple to carry out a check on the rotational direction of the drive.

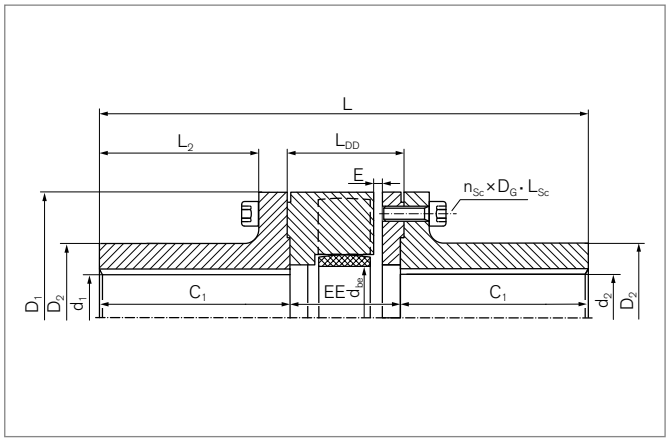


### Characteristics

- The intermediate ring can be exchanged following removal of the jaw rings without moving a shaft.
- Rotational direction can be checked when jaw rings are dismounted
- Simplified assembly and maintenance of the drive line through improved accessibility
- Optimisation of the vibration damping with different hardness levels of the intermediate ring, usable from –30 °C to +100 °C.
- Standard material for intermediate ring: VkR
- Compact design because of pre-compressed intermediate rings
- Outer diameter up to 400 mm, Bohrung bis max. 160 mm
- Torques up to $T_{KN}$ = 13350 Nm / $T_{Kmax}$ = 40050 Nm

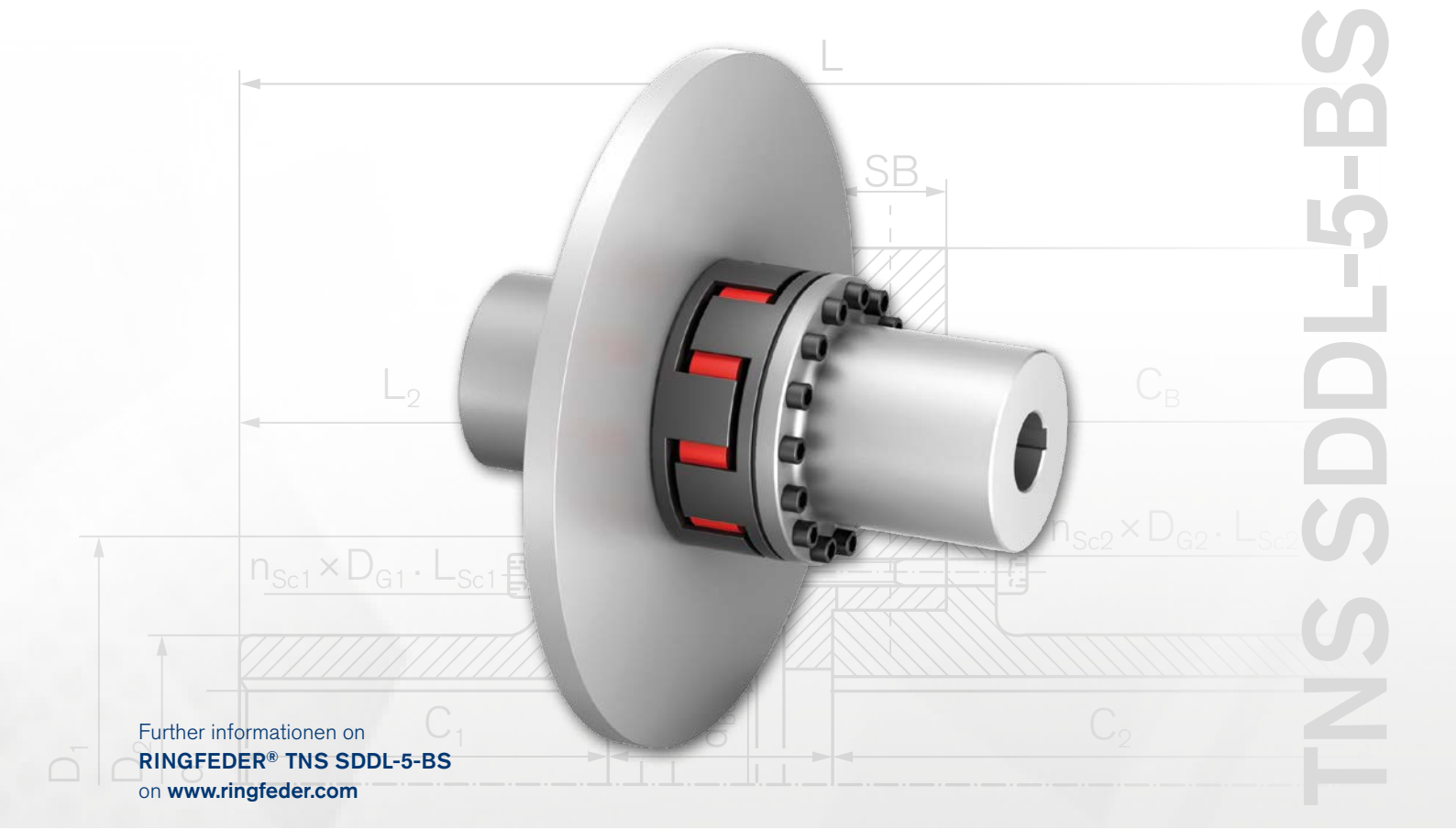


Further informationen on
**RINGFEDER® TNS SDDL-5-BS**
on **www.ringfeder.com**

## Coupling with detachable claw rings, long hubs and brake disc

The **RINGFEDER® TNS SDDL-5-BS** is a torsionally elastic and puncture-proof multi-part jaw coupling with a brake disc and removable jaw rings. The coupling transmits the torque via pre-compressed, elastic buffers in polyurethane (Vk) in standard Vk60D, that are connected to one another to an intermediate ring. The elastic intermediate ring can damp impacts and torsional vibrations and is oil resistant. Radial installation and removal of the jaw rings and then the brake disc are possible because both coupling halves are in two sections. Thus it is possible to exchange the elastic intermediate ring without moving the aggregates. When the jaw rings and brake disc have been dismounted it is also simple to carry out a check on the rotational direction of the drive.

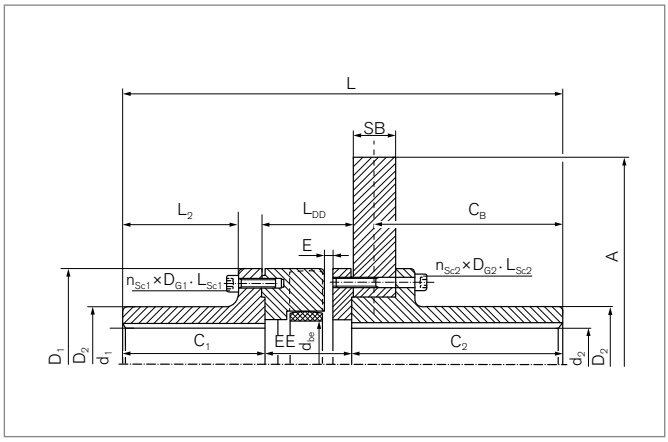


### Characteristics

- The intermediate ring can be exchanged following removal of the jaw rings without moving a shaft.
- Rotational direction can be checked when jaw rings are dismounted
- Simplified assembly and maintenance of the drive line through improved accessibility
- Optimisation of the vibration damping with different hardness levels of the intermediate ring, usable from –30 °C to +100 °C.
- Standard material for intermediate ring: Vk60D
- Outer diameter up to 400 mm, Bohrung bis max. 160 mm
- Torques up to $T_{KN}$ = 13350 Nm / $T_{Kmax}$ = 40050 Nm

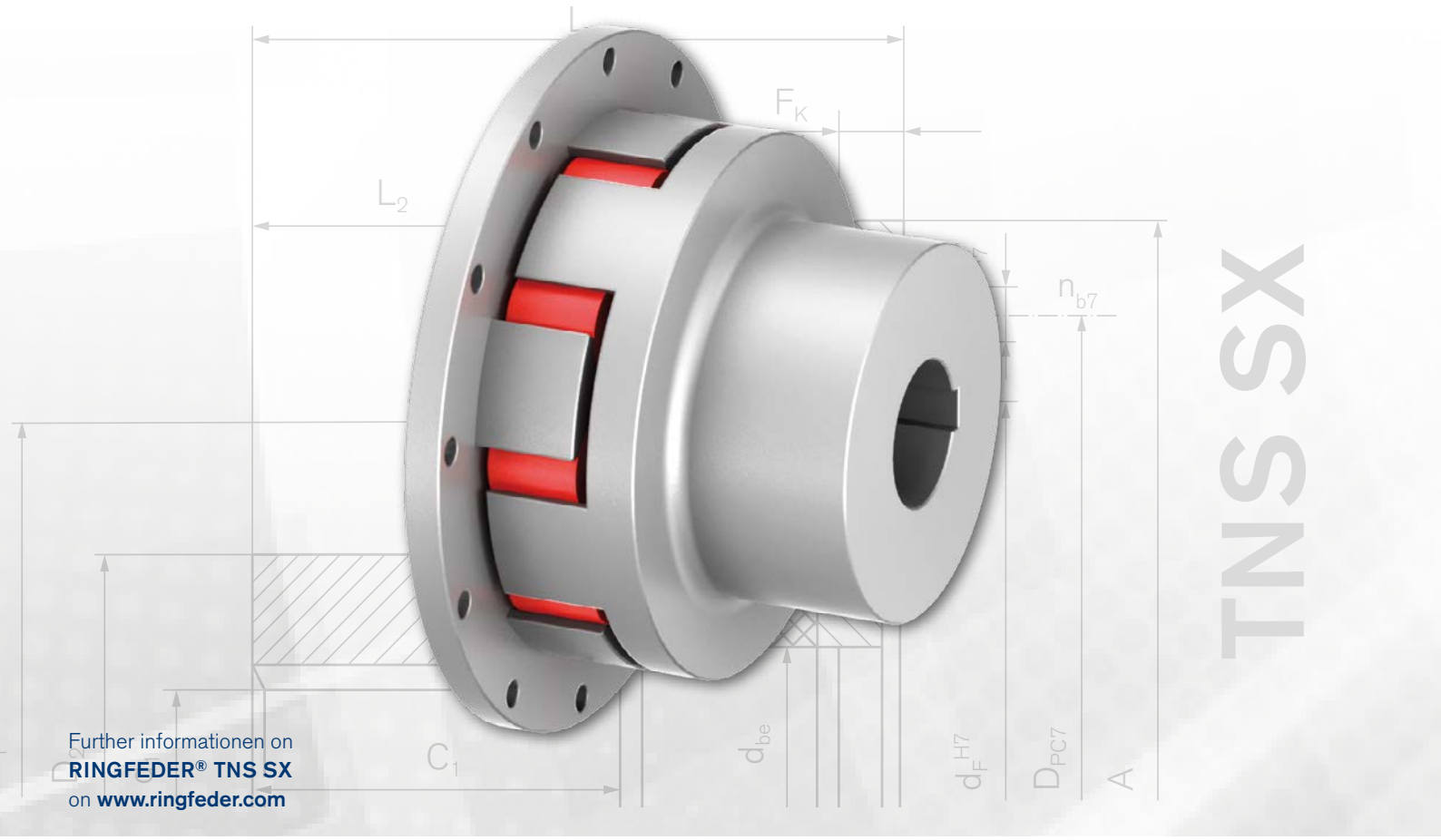


Further informationen on
**RINGFEDER® TNS SX**
on **www.ringfeder.com**

## Coupling with standard hub and claw flange

The **RINGFEDER® TNS SX** is a torsionally elastic and puncture-proof jaw coupling that is especially suited to hydrodynamic turbo couplings. It balances out angular, radial and axial shaft offset within determined tolerances. The coupling transmits the torque via pre-compressed, elastic buffers in synthetic rubber (Pb) or polyurethane (Vk), in standard Perbunan Pb82, that are connected to one another to an intermediate ring. The elastic intermediate ring can damp impacts and torsional vibrations and is oil resistant. The coupling can be used in any direction of rotation and installation position.

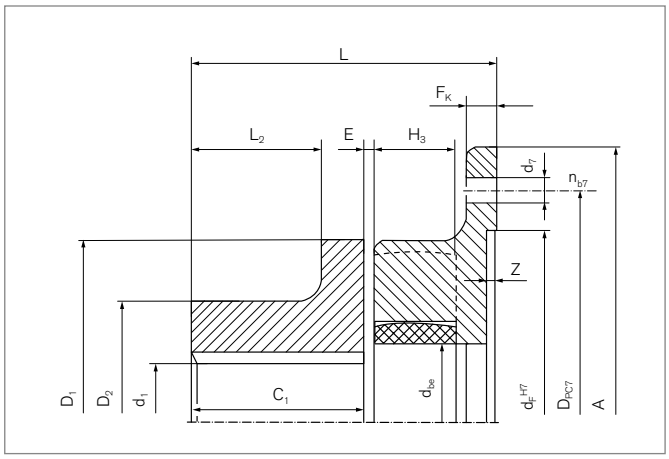


### Characteristics

- Standardised flange connection in aluminium
- The intermediate ring can be exchanged with a mounted hub when one shaft has been moved.
- Torsionally elastic and puncture-proof, balances out angular, radial and axial shaft offset
- Optimisation of the vibration damping with different hardness levels of the intermediate ring, usable from –30 °C to +100 °C.
- Standard material for intermediate ring: Pb82
- Outer diameter up to 400 mm, Bohrung bis max. 160 mm
- Torques up to $T_{KN}$ = 4750 Nm / $T_{Kmax}$ = 14250 Nm

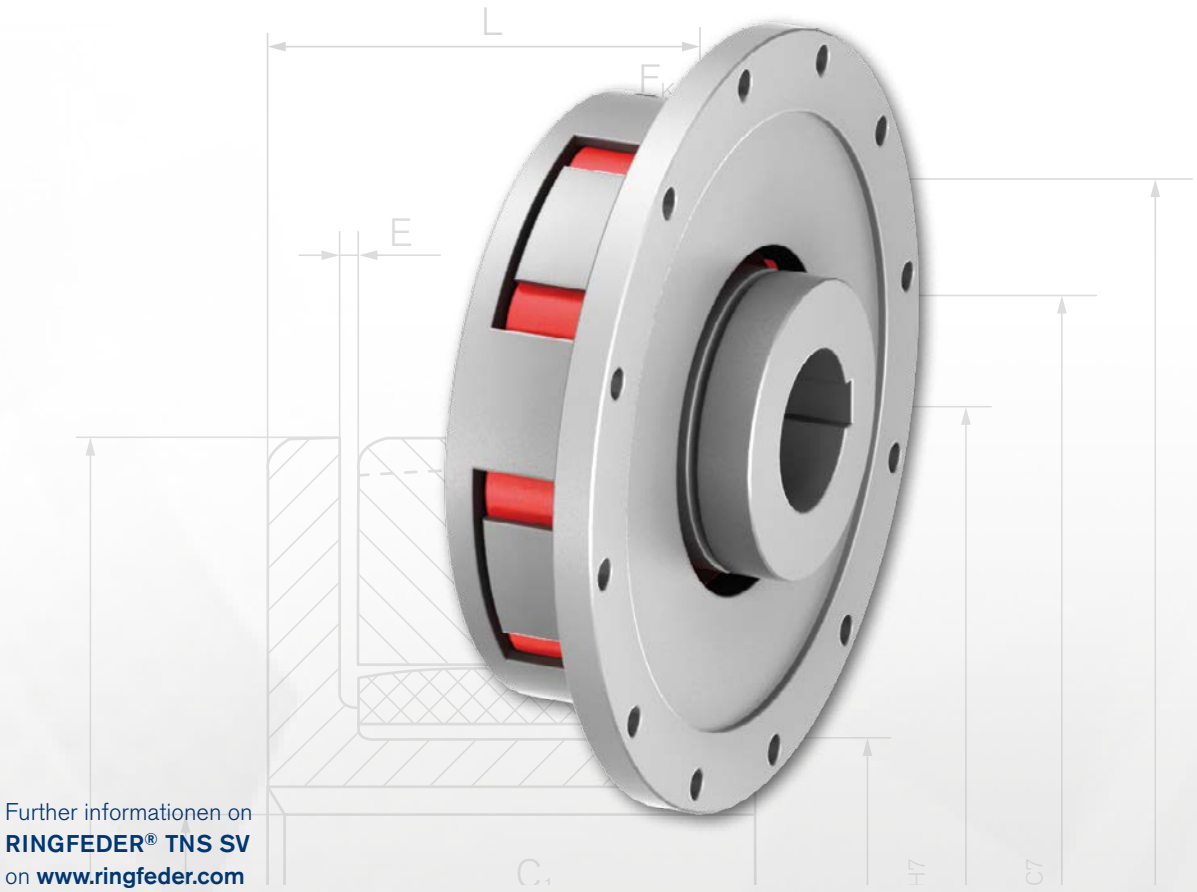


TNS SV

Further informationen on
**RINGFEDER® TNS SV**
on **www.ringfeder.com**

## Coupling with inner hub and claw flange

The **RINGFEDER® TNS SV** is a torsionally elastic, puncture-proof and compact jaw coupling that is especially suited to hydro-dynamic turbo couplings. It balances out angular, radial and axial shaft offset within determined tolerances. The coupling transmits the torque via pre-compressed, elastic buffers in synthetic rubber (Pb) or polyurethane (Vk), in standard Perbunan Pb82, that are connected to one another to an intermediate ring. The elastic intermediate ring can damp impacts and torsional vibrations and is oil resistant. The coupling can be used in any direction of rotation and installation position.

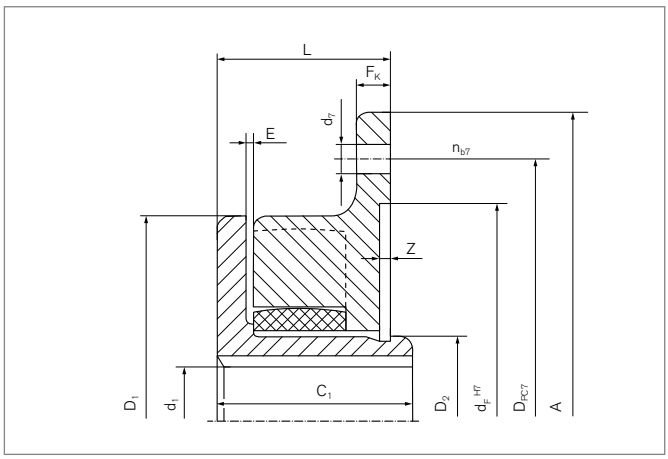


### Characteristics

- Standardised flange connection in aluminium
- Axially compact through internal coupling hub
- The intermediate ring can be exchanged with a mounted hub when one shaft has been moved.
- Torsionally elastic and puncture-proof, balances out angular, radial and axial shaft offset
- Optimisation of the vibration damping with different hardness levels of the intermediate ring, usable from –30 °C to +100 °C.
- Standard material for intermediate ring: Pb82
- Outer diameter up to 400 mm, Bohrung bis max. 160 mm
- Torques up to $T_{KN}$ = 4750 Nm / $T_{Kmax}$ = 14250 Nm

# TNB

# Elastomer Jaw Couplings

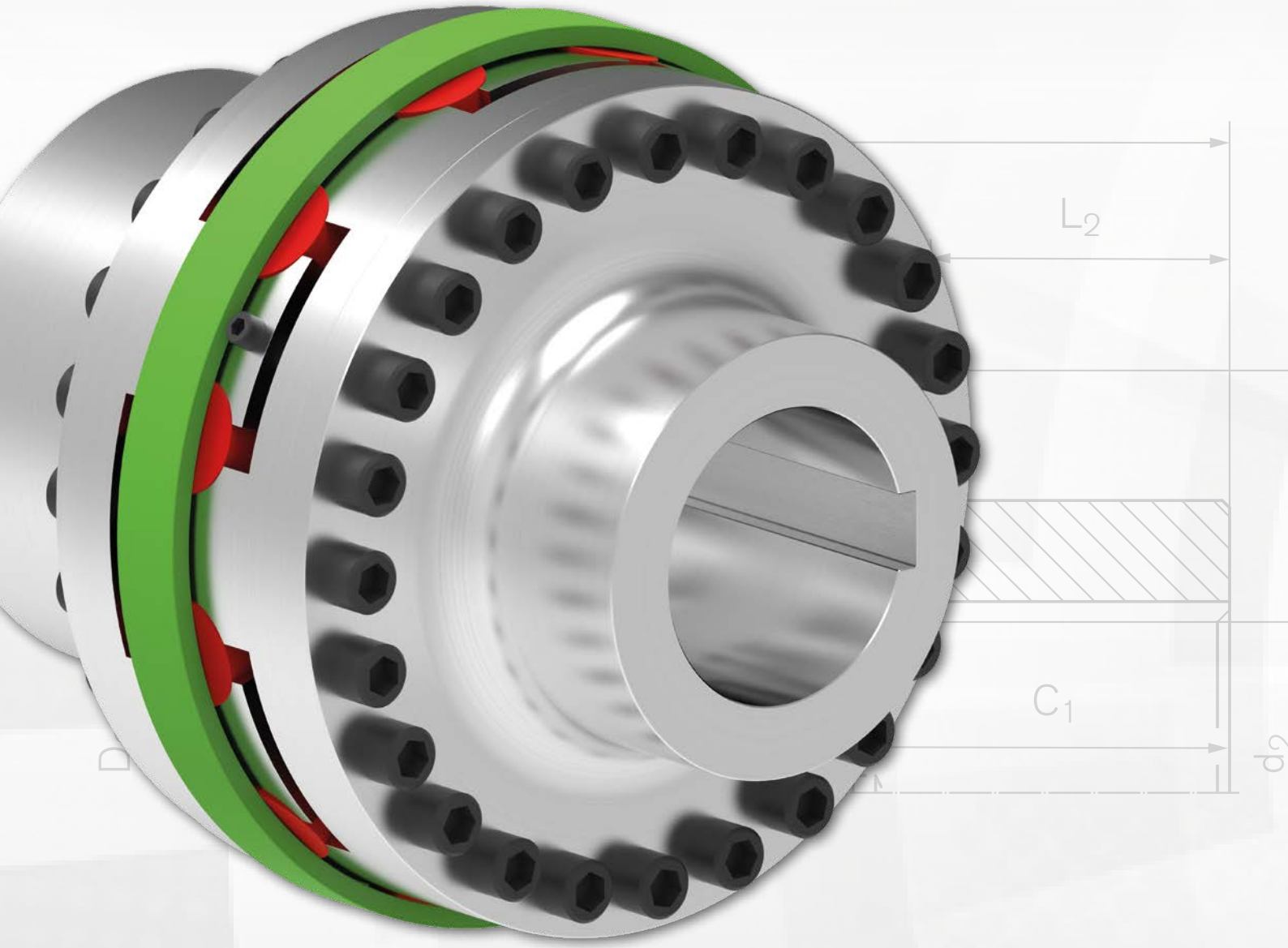


## Elastomer Jaw Couplings RINGFEDER® TNB

RINGFEDER® TNB jaw couplings are puncture-proof, elastic heavy load couplings. They are often used on the output shaft of the gearbox in order to damp process-related impacts and to absorb the dynamic effects of the acceleration of heavy masses. Used in drives for ore production and processing in mining and construction engineering, in cement works, in material handling and also in offshore technology.

## Characteristics · Advantages

- Torsionally flexible and damping of torsional vibrations
- High breakage resistance through stable jaw design
- Many variations with modular design
- Radially accessible individual buffers reduce assembly and maintenance work
- Nom. torques: 1000–260000 Nm

## Basic informationen

The technical data tables for the couplings types supplied in this catalogue include for one part design hubs hard VkW buffer and for multi-part design hubs middle hard VkR buffers. The soft Pb82 buffers can be used in each type considering the lower torque capability.

The higher the hardness of the elastic buffers, the higher the torque transmission capability of the coupling and, as a result, the higher is the torsion spring stiffness. The rated torque $T_{KN}$ listed in the tables is the torque that the coupling is capable of transmitting continuously. The maximum torque $T_{Kmax}$ is the torque that the coupling is able to transmit for a short time up to $10^5$ times, e.g. during start-up.

Torsional vibration analyses (TVA) are performed by specialists to optimize the drive line. To this purpose, a detailed description of the oscillatory system is required, including the mechanical arrangement (spring-mass system) as well as the plant-related excitation functions. The specific coupling data such as stiffness, damping and mass moments of inertia will be supplied on request.

| | Speed min$^{-1}$ | Torque with following buffer | | | | | |
|---|---|---|---|---|---|---|---|
| | | Nm | | Nm | | Nm | |
| | | Pb82 | | VkR | | VkW | |
| *Size* | $n_{max}$ | $T_{KN}$ | $T_{Kmax}$ | $T_{KN}$ | $T_{Kmax}$ | $T_{KN}$ | $T_{Kmax}$ |
| 240 | 4100 | 1000 | 3000 | 2500 | 7500 | - | - |
| 300 | 3300 | 2000 | 6000 | 6000 | 18000 | 8600 | 25800 |
| 350 | 2800 | 3400 | 10200 | 10500 | 31500 | 15000 | 45000 |
| 400 | 2450 | 5050 | 15150 | 16000 | 48000 | 23000 | 69000 |
| 450 | 2200 | 6850 | 20550 | 21000 | 63000 | 31000 | 93000 |
| 500 | 2000 | 10300 | 30900 | 28500 | 85500 | 41200 | 123600 |
| 550 | 1800 | 13200 | 39600 | 45000 | 135000 | 66000 | 198000 |
| 600 | 1650 | 16500 | 49500 | 55000 | 165000 | 80000 | 240000 |
| 650 | 1500 | 19700 | 59100 | 65000 | 195000 | 94000 | 282000 |
| 700 | 1400 | 26700 | 80100 | 90000 | 270000 | 130000 | 390000 |
| 800 | 1200 | 39000 | 117000 | 125000 | 375000 | 180000 | 540000 |
| 900 | 1100 | 54000 | 162000 | 180000 | 540000 | 260000 | 780000 |

$T_{KN}$ = Nominal torque of coupling

$T_{Kmax}$ = Max. torque of the coupling by one part design

Replacement of elastic buffers without axial movement of the coupled machines. After removing the cheese head screws the retaining ring can axial shift and the buffers are free changeable each by each.

The central section can be radially removed as required or can be released on one side. As a result the facilitates assembly of heavy weight drive components. As well the direction of rotation of the electric motor can be checked.

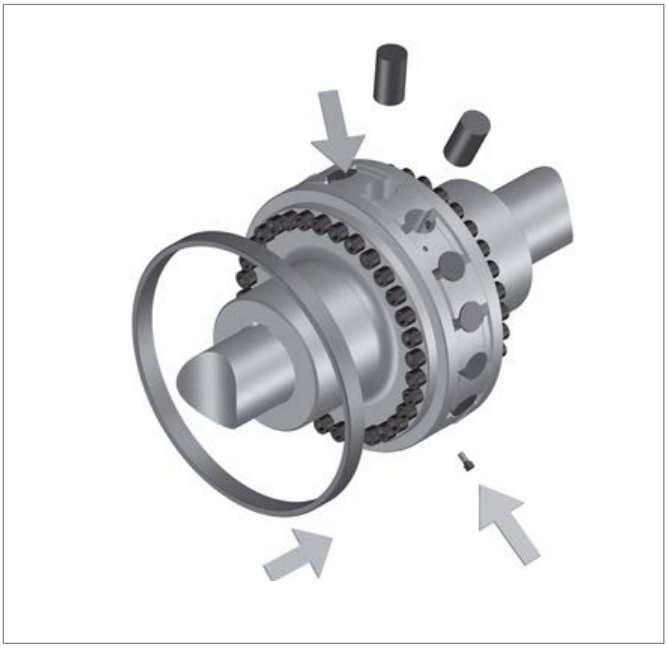

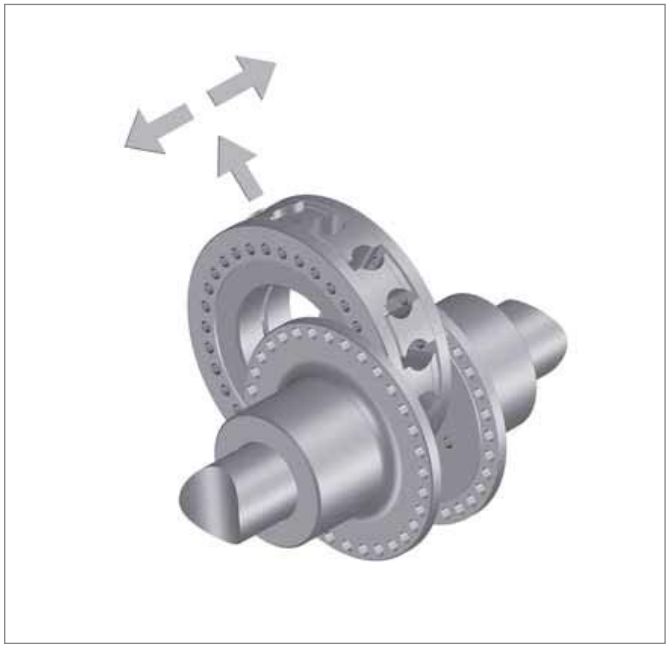

## Allocation of the RINGFEDER® TNB couplings to IEC standard motors
## Protection rating IP 54/IP 55 (intermediate ring VkR)

| Size | Engine | kW n= 3.000 min$^{-1}$ | Coupling size | kW n= 1.500 min$^{-1}$ | Coupling size | kW n= 1.000 min$^{-1}$ | Coupling size | kW n= 750 min$^{-1}$ | Coupling size | Cyl. shaft end Ø x L by rotary speed of = 3000 min$^{-1}$ | ≤ 3000 min$^{-1}$ |
|---|---|---|---|---|---|---|---|---|---|---|---|
| 250 | M | 55 | 240 | 55 | 240 | 37 | 240 | 30 | 240 | 65 x 140 | 75 x 140 |
| 280 | S | 75 | 240 | 75 | 240 | 45 | 240 | 34 | 240 | 65 x 140 | 75 x 140 |
| 280 | M | 90 | 240 | 90 | 240 | 55 | 240 | 45 | 240 | 65 x 140 | 80 x 170 |
| 315 | S | 110 | 240 | 110 | 240 | 75 | 240 | 55 | 240 | 65 x 140 | 80 x 170 |
| 315 | M | 132 | 240 | 132 | 240 | 90 | 240 | 75 | 240 | 65 x 141 | 80 x 170 |
| 315 | L | 160 | 240 | 160 | 240 | 110 | 240 | 90 | 240 | 65 x 142 | 80 x 170 |
| 315 | L | 200 | 240 | 200 | 240 | 132 | 240 | 110 | 240 | 65 x 143 | 80 x 170 |
| 315 | L | - | 240 | - | 240 | 160 | 240 | 132 | 240 | 65 x 144 | 80 x 170 |
| 315 | - | 250 | 240 | 250 | 240 | 200 | 240 | 160 | 300 | 65 x 145 | 85 x 170 |
| 315 | - | 315 | 240 | 315 | 300 | 250 | 300 | 200 | 300 | 65 x 146 | 85 x 170 |
| 355 | - | 355 | 240 | 355 | 300 | 315 | 300 | 250 | 300 | 75 x 140 | 95 x 170 |
| 355 | - | 400 | 240 | 400 | 240 | 400 | 300 | 315 | 300 | 75 x 140 | 95 x 170 |
| 355 | - | 500 | 240 | 500 | 240 | - | - | - | - | 75 x 140 | 95 x 170 |
| 400 | - | 560 | 240 | 560 | 240 | 450 | 300 | 355 | 300 | 80 x 170 | 110 x 210 |
| 400 | - | 630 | 300 | 630 | 240 | 500 | 350 | 400 | 350 | 70 x 170 | 110 x 210 |
| 400 | - | 710 | 300 | 710 | 240 | 560 | 350 | 450 | 350 | 70 x 170 | 110 x 210 |
| 450 | - | 800 | 300 | 800 | 350 | 630 | 350 | 500 | 350 | 90 x 170 | 120 x 210 |
| 450 | - | 900 | 300 | 900 | 350 | 710 | 350 | 560 | 350 | 90 x 170 | 120 x 210 |
| 450 | - | 1000 | 300 | 1000 | 350 | 800 | 350 | 630 | 350 | 90 x 170 | 120 x 210 |

The allocation of the couplings is based on the type RINGFEDER® TNB with VkR buffer and takes into account a uniform torque at the operating point (minimum operating factor 1.25) with low variation and slight shocks and is valid up to an ambient temperature of +30 °C.

RINGFEDER

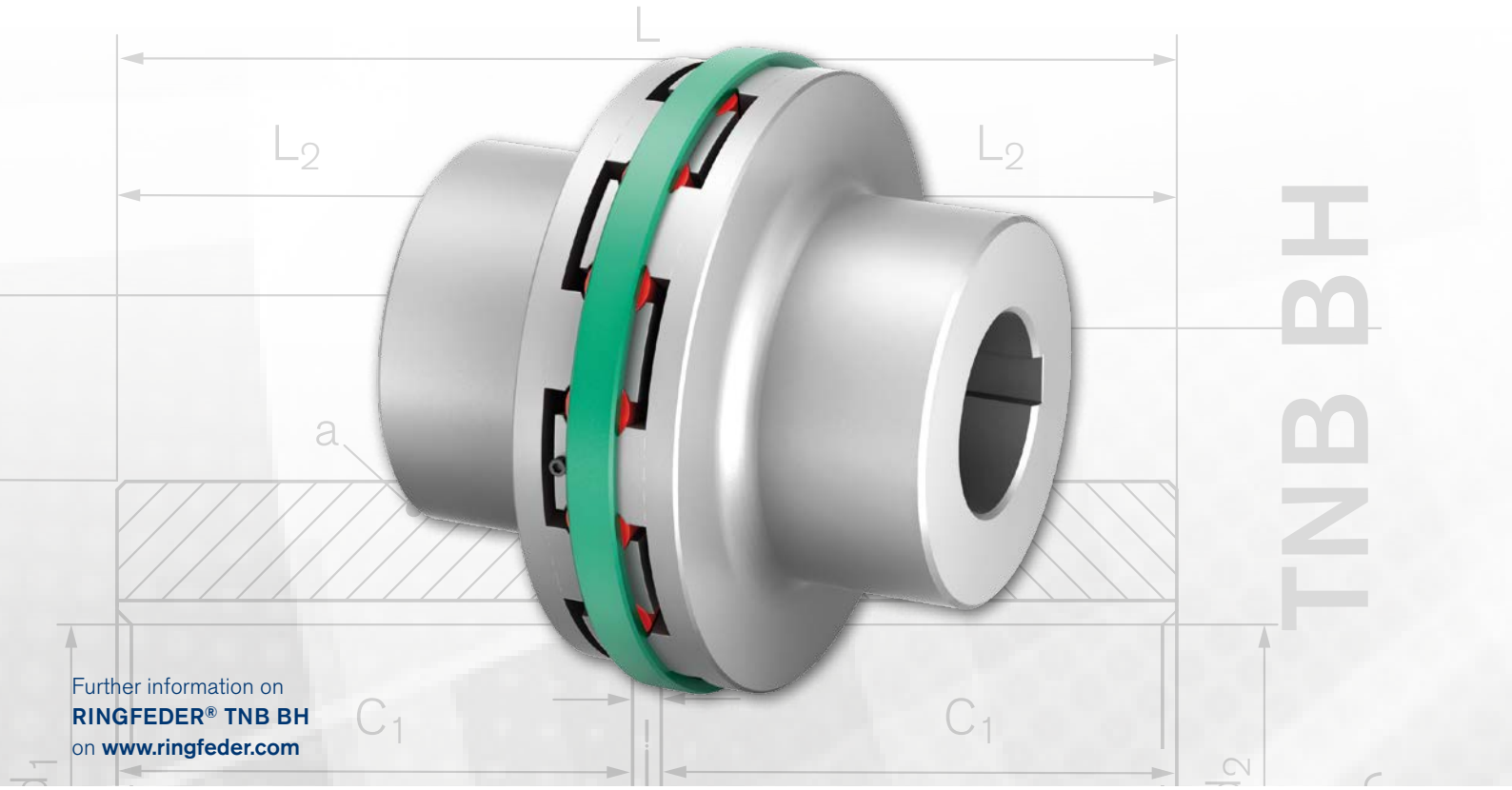


Further information on
**RINGFEDER® TNB BH**
on **www.ringfeder.com**

# Combination of one-part design coupling hubs with VkW buffer for highest torque transmission

The **RINGFEDER® TNB BH** coupling is a torsionally elastic and puncture-proof jaw coupling. It balances out angular, radial and axial shaft offset within determined tolerances. The coupling transmits the torque via pre-compressed and radially freely accessible elastic buffers in synthetic rubber (Perbunan; Pb) or polyurethane (Vulkollan; Vk), in standard VkW. The elastic buffers can damp impacts and torsional vibrations and are oil resistant. The coupling can be used in any direction of rotation and installation position.

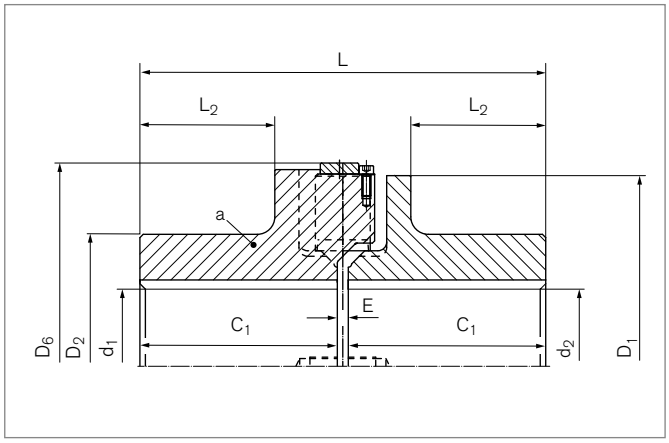


## Characteristics

- Radially accessible individual buffers reduce assembly and maintenance work
- Torsionally elastic and puncture-proof, balances out angular, radial and axial shaft offset
- Optimisation of the vibration damping through different buffer hardness levels, usable from -30 °C to +100 °C.
- Maximum torque transmission through single-part coupling hub and VkW buffer
- Fitted with extraction and transportation bores
- Nominal torques $T_{KN}$ = 260000 Nm

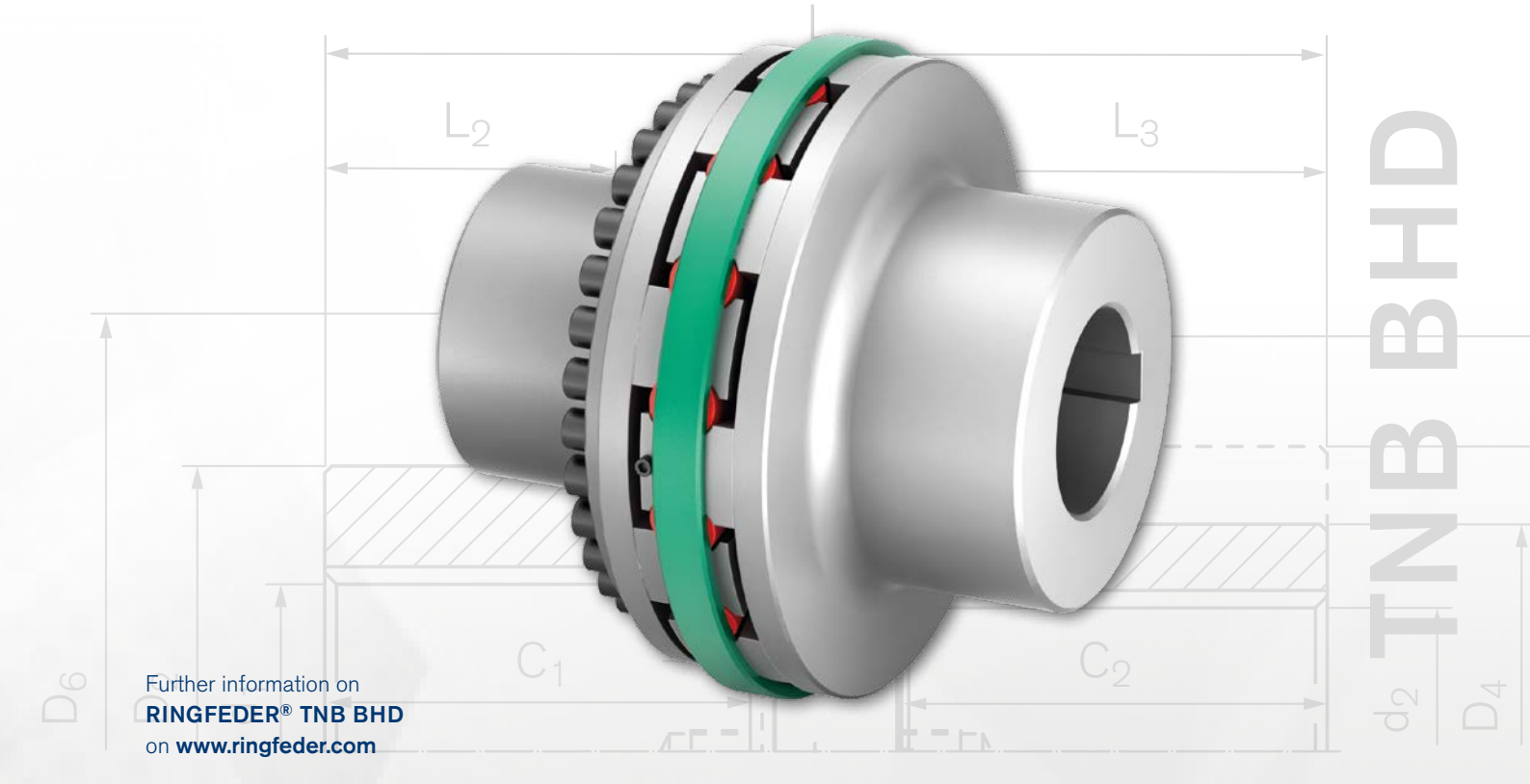


Further information on
**RINGFEDER® TNB BHD**
on **www.ringfeder.com**

# Combination of an one-part design and a multi-part design coupling hub and VkR buffer

The **RINGFEDER® TNB BHD** coupling is a torsionally elastic and puncture-proof jaw coupling. It balances out angular, radial and axial shaft offset within determined tolerances. The coupling transmits the torque via pre-compressed and radially freely accessible elastic buffers in synthetic rubber (Perbunan; Pb) or polyurethane (Vulkollan; Vk), in standard VkR. The elastic buffers can damp impacts and torsional vibrations and are oil resistant. The coupling can be used in any direction of rotation and installation position. One of the coupling halves is divided into flange hub and jaw ring. When the jaw ring is pulled back the drive line is separated, allowing simple checking of the rotational direction of the drive. This additional interface substantially simplifies the assembly of the drive line.

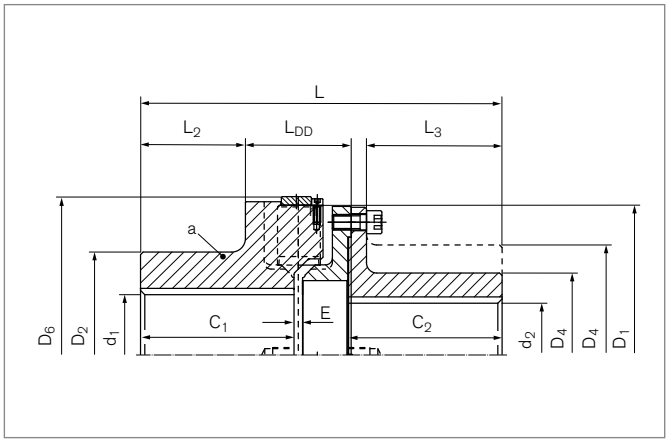


## Characteristics

- Radially accessible individual buffers reduce assembly and maintenance work
- Simplified assembly and rotational direction check through separation of jaw ring and flange hub
- Torsionally elastic and puncture-proof, balances out angular, radial and axial shaft offset
- Optimisation of the vibration damping through different buffer hardness levels, usable from -30 °C to +100 °C.
- Fitted with extraction and transportation bores
- Nominal torques $T_{KN}$ = 180000 Nm

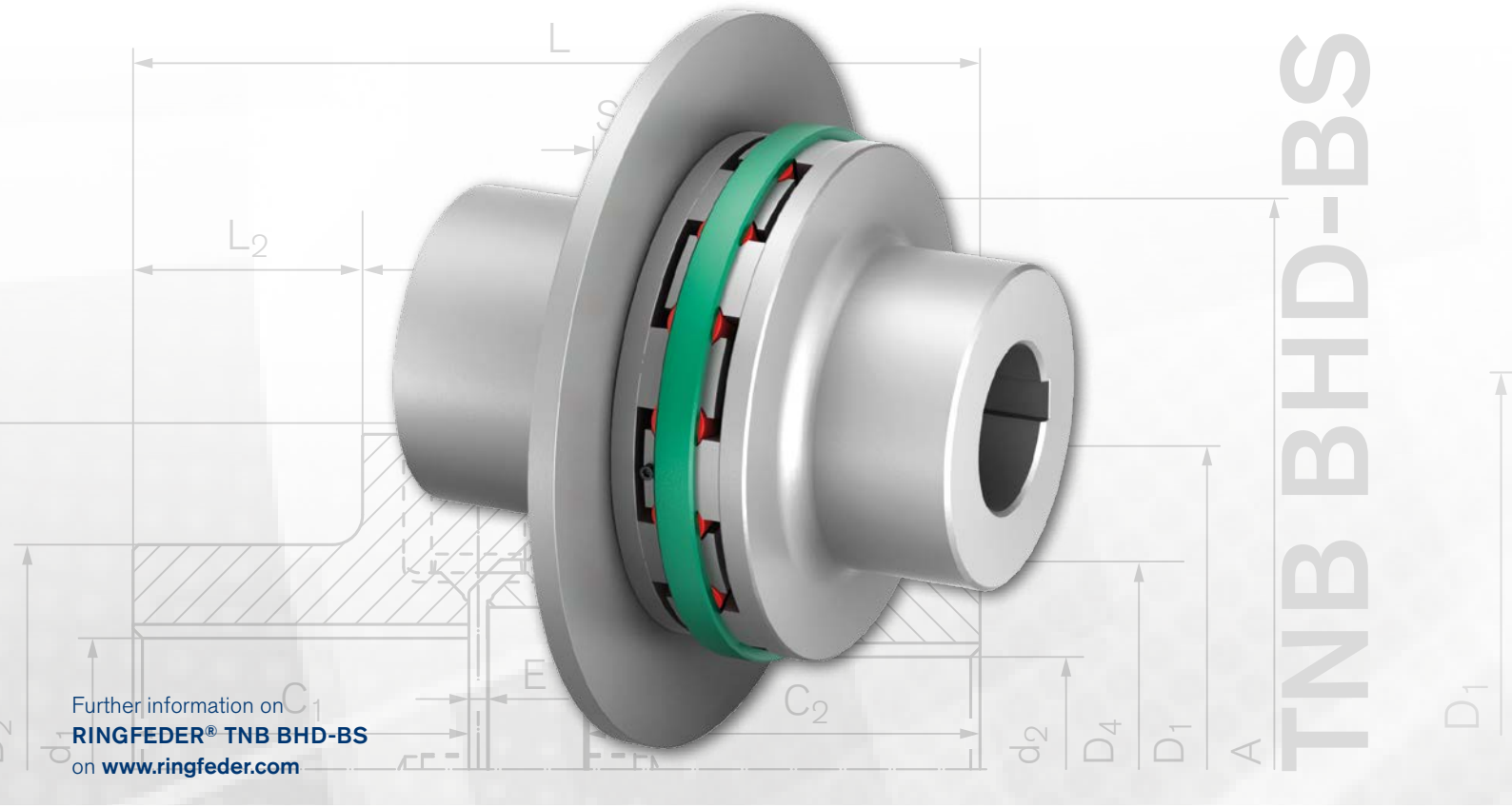


Further information on
**RINGFEDER® TNB BHD-BS**
on **www.ringfeder.com**

# Combination of an one-part design and a multi-part design coupling hub with brake disc and VkR buffer.

The **RINGFEDER® TNB BHD-BS** coupling is a torsionally elastic and puncture-proof jaw coupling with a straight brake disc. It balances out angular, radial and axial shaft offset within determined tolerances. The coupling transmits the torque via pre-compressed and radially freely accessible elastic buffers in synthetic rubber (Perbunan; Pb) or polyurethane (Vulkollan; Vk), in standard VkR. The elastic buffers can damp impacts and torsional vibrations and are oil resistant. The coupling can be used in any direction of rotation and installation position. One of the coupling halves is divided into flange hub and jaw ring. When the jaw ring is pulled back the drive line is separated, allowing simple checking of the rotational direction of the drive. This additional interface substantially simplifies the assembly of the drive line.

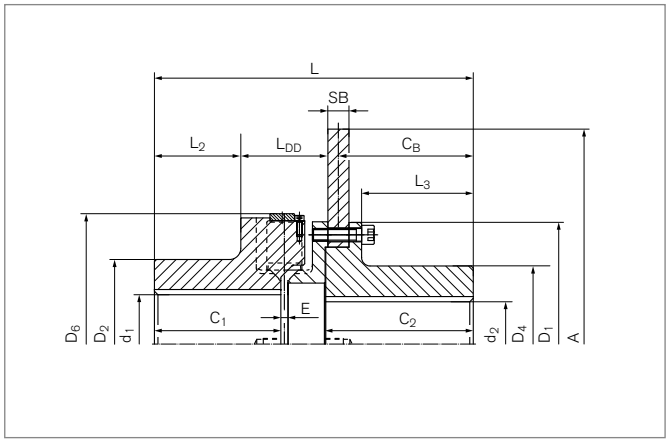


## Characteristics

- Radially accessible individual buffers reduce assembly and maintenance work
- Simplified assembly and rotational direction check through separation of jaw ring and flange hub
- Torsionally elastic and puncture-proof, balances out angular, radial and axial shaft offset
- Optimisation of the vibration damping through different buffer hardness levels, usable from -30 °C to +100 °C.
- Fitted with extraction and transportation bores
- Nominal torques $T_{KN}$ = 180000 Nm

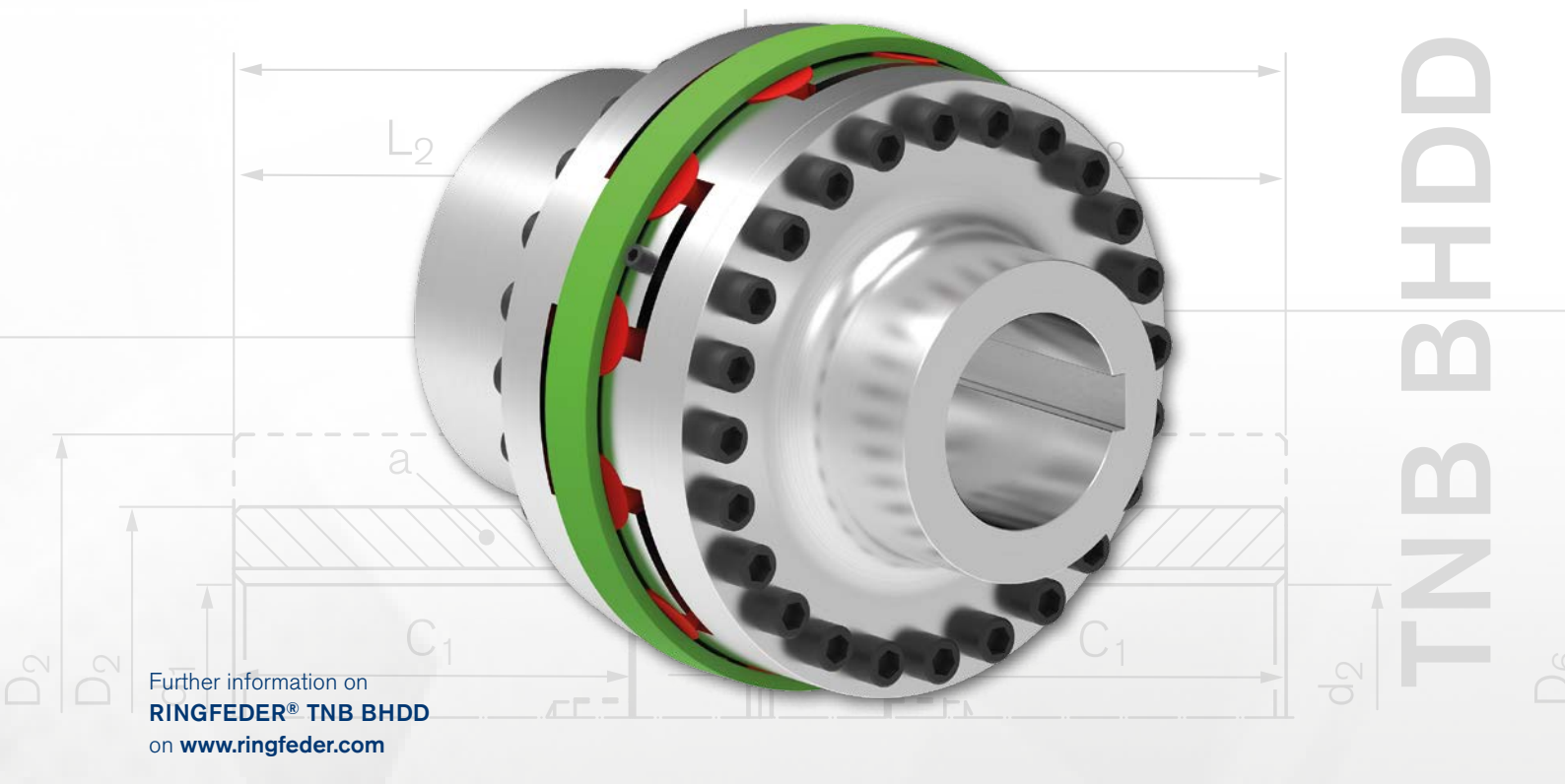


Further information on
**RINGFEDER® TNB BHDD**
on **www.ringfeder.com**

# Combination of multi-part design coupling hubs with radially removable central section and VkR buffer

The **RINGFEDER® TNB BHDD** coupling is a torsionally elastic and puncture-proof jaw coupling with removable central section. It balances out angular, radial and axial shaft offset within determined tolerances. The coupling transmits the torque via pre-compressed and radially freely accessible elastic individual buffers in synthetic rubber (Perbunan; Pb) or polyurethane (Vulkollan; Vk), in standard VkR. The elastic buffers can damp impacts and torsional vibrations and are oil resistant. The coupling can be used in any direction of rotation and installation position. Both coupling halves are divided into flange hub and jaw ring. When the central section is removed the drive line is separated, allowing simple checking of the rotational direction of the drive. This additional free space substantially simplifies the assembly of the drive line.

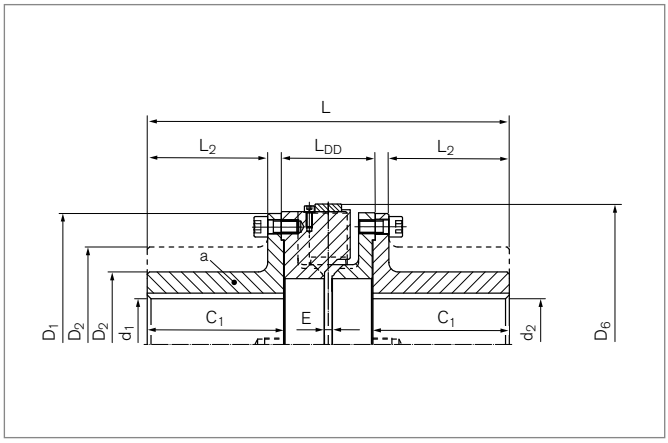


## Characteristics

- Radially accessible individual buffers reduce assembly and maintenance work
- Simplified assembly and rotational direction check through separation of jaw ring and flange hub
- Increased assembly space by removing the jaw rings
- Torsionally elastic and puncture-proof, balances out angular, radial and axial shaft offset
- Optimisation of the vibration damping through different buffer hardness levels, usable from -30 °C to +100 °C.
- Fitted with extraction and transportation bores
- Nominal torques $T_{KN}$ = 180000 Nm

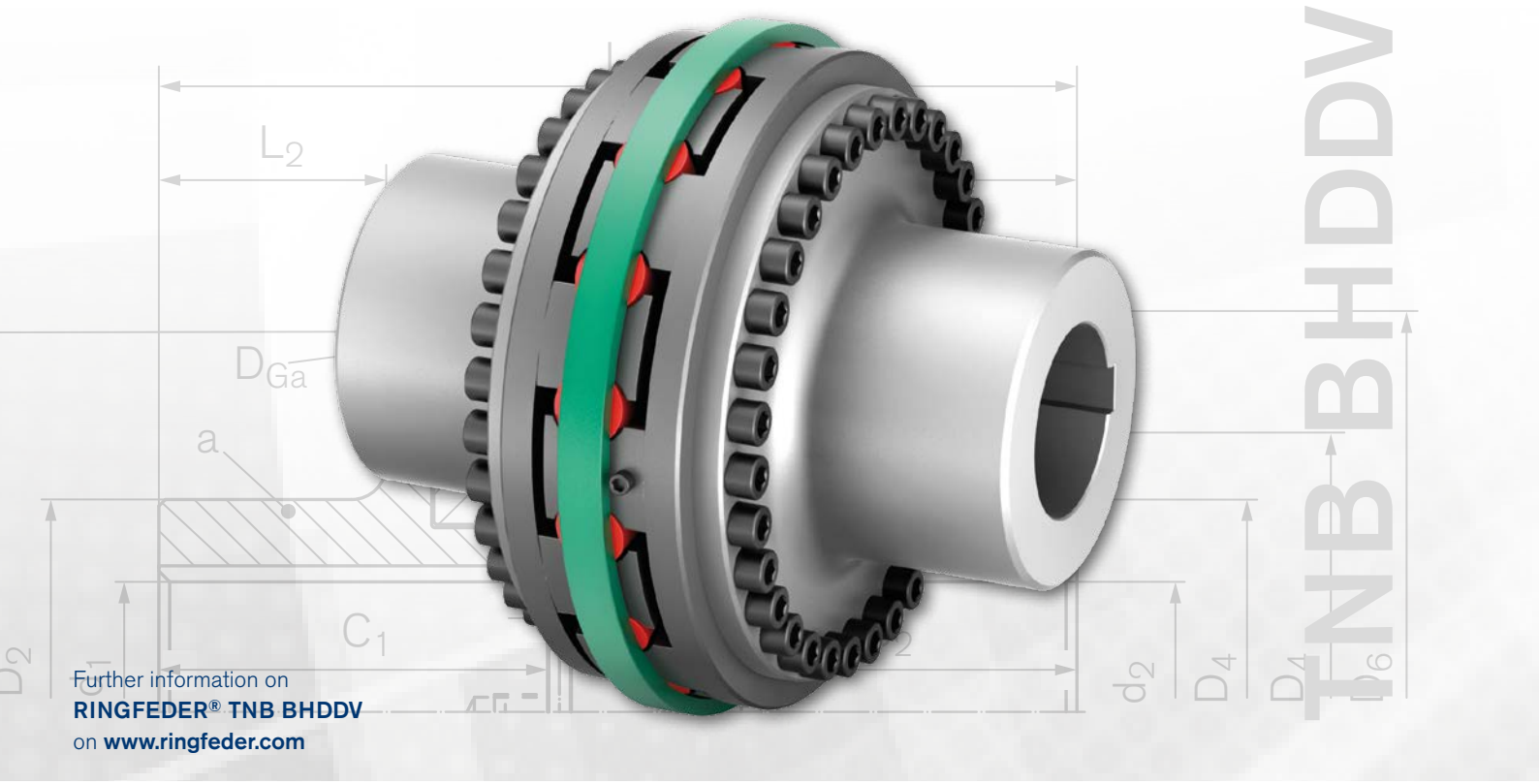


Further information on
**RINGFEDER® TNB BHDDV**
on **www.ringfeder.com**

# Combination of multi-part design coupling hubs for short shaft distances with VkR buffer

The **RINGFEDER® TNB BHDDV** coupling is a torsionally elastic and puncture-proof jaw coupling. It balances out angular, radial and axial shaft offset within determined tolerances. The coupling transmits the torque via pre-compressed and radially freely accessible elastic individual buffers in synthetic rubber (Perbunan; Pb) or polyurethane (Vulkollan; Vk), in standard ZZZ. The elastic buffers can damp impacts and torsional vibrations and are oil resistant. The coupling can be used in any direction of rotation and installation position. When the jaw ring is pulled back this allows simple checking of the rotational direction of the drive. This additional interface substantially simplifies the assembly of the drive line.

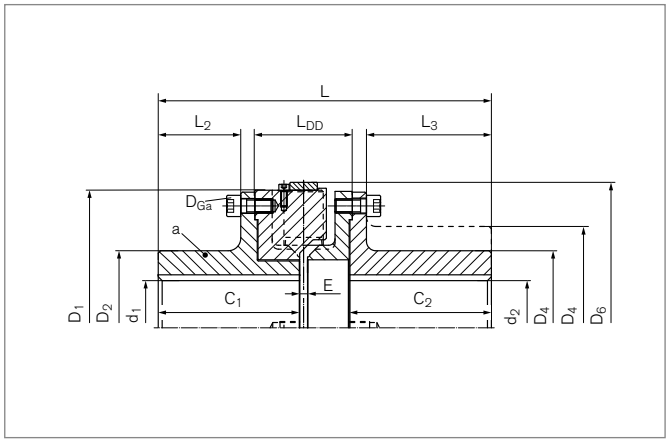


## Characteristics

- Radially accessible individual buffers reduce assembly and maintenance work
- Simplified assembly and rotational direction check through separation of jaw ring and flange hub
- Torsionally elastic and puncture-proof, balances out angular, radial and axial shaft offset
- Optimisation of the vibration damping through different buffer hardness levels, usable from -30 °C to +100 °C.
- Fitted with extraction and transportation bores
- Nominal torques $T_{KN}$ = 180000 Nm

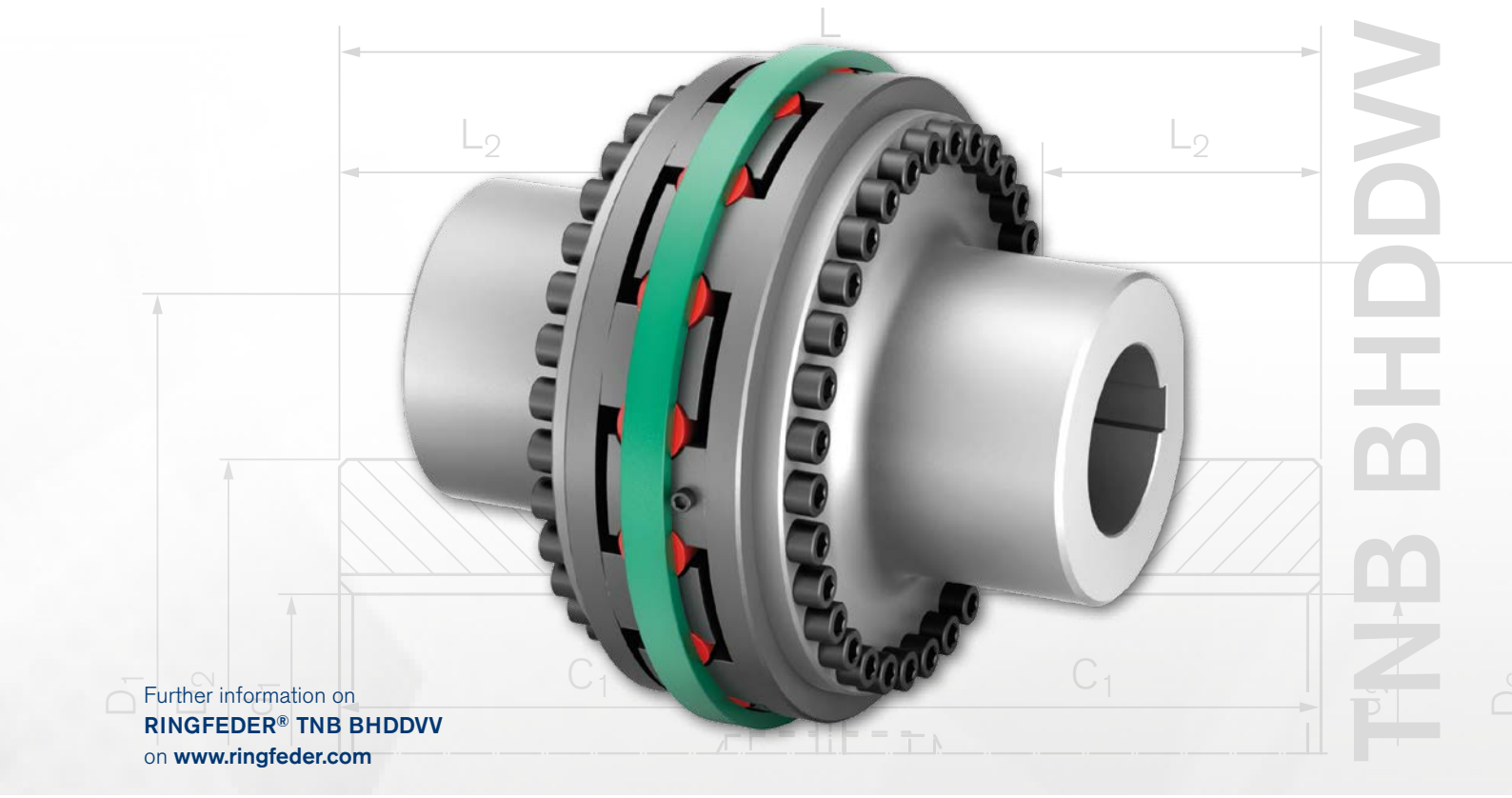


Further information on
**RINGFEDER® TNB BHDDVV**
on **www.ringfeder.com**

# Symmetrical setup of multi-part design coupling hubs with very short shaft distances with VkR buffers

The **RINGFEDER® TNB BHDDVV** coupling is a torsionally elastic and puncture-proof jaw coupling. It balances out angular, radial and axial shaft offset within determined tolerances. The coupling transmits the torque via pre-compressed and radially freely accessible elastic individual buffers in synthetic rubber (Perbunan; Pb) or polyurethane (Vulkollan; Vk), in standard VkR. The elastic buffers can damp impacts and torsional vibrations and are oil resistant. The coupling can be used in any direction of rotation and installation position. When one jaw ring is pulled back this allows checking of the rotational direction. Material and length of the hubs can be adapted to customer requirements.

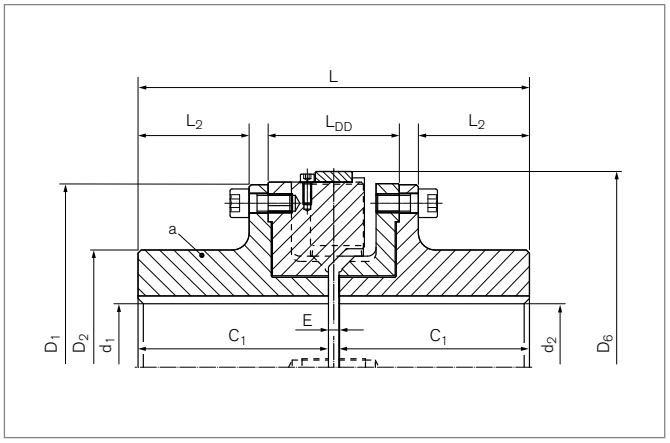


## Characteristics

- Radially accessible individual buffers reduce assembly and maintenance work
- Torsionally elastic and puncture-proof, balances out angular, radial and axial shaft offset
- Optimisation of the vibration damping through different buffer hardness levels, usable from -30 °C to +100 °C.
- Hub material and design can be displayed as required
- Fitted with extraction and transportation bores
- Nominal torques $T_{KN}$ = 180000 Nm

RINGFEDER

EN | Tech Paper | 11.2024

# Elastomer Jaw Couplings RINGFEDER®

## GWE, TNM, TNS, TNB

### Tables & Values

The equations and recommendations from the chapter 'Dimensioning of coupling' must be taken into account in order to determine coupling size.

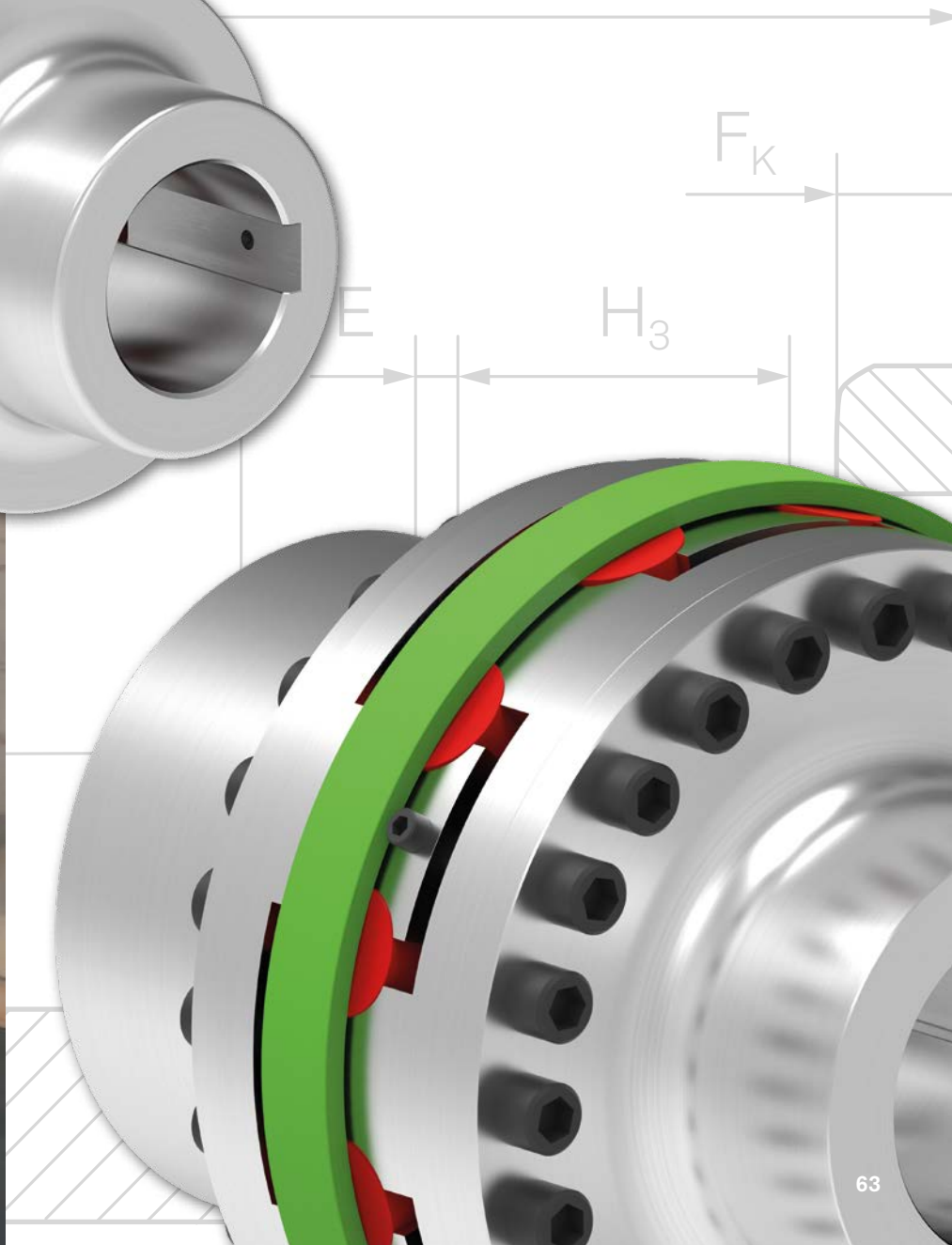

# Elastomer Jaw Couplings

# RINGFEDER® GWE 5102

## Miniature coupling with set screw hubs

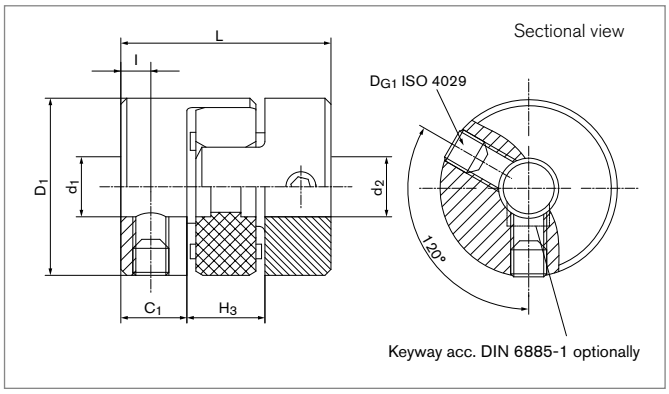


| Size | $d_1;d_2$ min-max Without keyway | $d_{1k};d_{2k}$ min-max With keyway | $C_1$ | $D_1$ | $H_3$ | l | L |
|---|---|---|---|---|---|---|---|
| | mm | mm | mm | mm | mm | mm | mm |
| 5 | 2 - 5 | --- - --- | 5 | 10 | 5 | 2,5 | 15 |
| 7 | 3 - 8 | 6 - 8 | 7 | 14 | 8 | 3,5 | 22 |
| 9 | 3 - 12 | 6 - 10 | 10 | 20 | 10 | 5 | 30 |
| 12 | 4 - 12 | 6 - 12 | 11 | 25 | 12 | 5 | 34 |
| 14 | 4 - 16 | 6 - 16 | 11 | 30 | 13 | 5 | 35 |
| 19 | 6 - 24 | 6 - 24 | 25 | 40 | 16 | 10 | 66 |
| 24 | 8 - 35 | 8 - 35 | 30 | 55 | 18 | 10 | 78 |
| 28 | --- - --- | 10 - 38 | 35 | 65 | 20 | 15 | 90 |
| 38 | --- - --- | 12 - 48 | 45 | 80 | 24 | 15 | 114 |

Transmission of the couplings transmissible torque T can not longer be guaranteed for certain with borings < $d_{min}$. Types with borings < $d_{min}$, however, can be supplied.

Moment of inertia and weight (mass) are calculated with reference to the largest bore size.

| Size | T | $H_{es}$ | $n_{max}$ | J | Gw | $D_{G1}$ | $T_{A1}$ |
|---|---|---|---|---|---|---|---|
| | Nm | | 1/min | $10^{-3}kgm^2$ | kg | mm | Nm |
| 5 | 0,5 | 92 SH A | 47500 | 0,000034 | 0,005 | 1 x M3 | 1,3 |
| 7 | 1,2 | 92 SH A | 34000 | 0,000196 | 0,009 | 1 x M3 | 1,3 |
| 9 | 3 | 92 SH A | 24000 | 0,00108 | 0,017 | 2 x M4 | 3 |
| 12 | 5 | 92 SH A | 19000 | 0,00284 | 0,03 | 2 x M4 | 5 |
| 14 | 7,5 | 92 SH A | 16000 | 0,0057 | 0,041 | 2 x M6 | 6 |
| 19 | 10 | 92 SH A | 12000 | 0,036 | 0,138 | 2 x M6 | 6 |
| 24 | 35 | 92 SH A | 8500 | 0,162 | 0,282 | 2 x M6 | 6 |
| 28 | 95 | 92 SH A | 7300 | 0,322 | 0,454 | 2 x M6 | 6 |
| 38 | 190 | 92 SH A | 5900 | 0,954 | 0,876 | 2 x M6 | 6 |

To continue see next page

## Elastomer Jaw Couplings RINGFEDER® GWE 5102

### Transmissible torque T [Nm] of the Shaft-Hub-Connection

| Size | Ø3 | Ø4 | Ø5 | Ø6 | Ø7 | Ø8 | Ø9 | Ø10 | Ø12 | Ø14 | Ø16 | Ø18 | Ø20 | Ø22 | Ø24 | Ø28 |
|---|---|---|---|---|---|---|---|---|---|---|---|---|---|---|---|---|
| | | | | | | | | | | | | | | | | |
| 5 | 0,5 | 0,5 | 0,5 | --- | --- | --- | --- | --- | --- | --- | --- | --- | --- | --- | --- | --- |
| 7 | 1,2 | 1,2 | 1,2 | 1,2 | 1,2 | 1,2 | --- | --- | --- | --- | --- | --- | --- | --- | --- | --- |
| 9 | 3 | 3 | 3 | 3 | 3 | 3 | 3 | 3 | 3 | --- | --- | --- | --- | --- | --- | --- |
| 12 | --- | 5 | 5 | 5 | 5 | 5 | 5 | 5 | 5 | --- | --- | --- | --- | --- | --- | --- |
| 14 | --- | 7,5 | 7,5 | 7,5 | 7,5 | 7,5 | 7,5 | 7,5 | 7,5 | 7,5 | 7,5 | --- | --- | --- | --- | --- |
| 19 | --- | --- | --- | 10 | 10 | 10 | 10 | 10 | 10 | 10 | 10 | 10 | 10 | 10 | 10 | --- |
| 24 | --- | --- | --- | --- | --- | 20 | 22 | 24 | 29 | 34 | 35 | 35 | 35 | 35 | 35 | 35 |
| 28 | --- | --- | --- | --- | --- | --- | --- | 95 | 95 | 95 | 95 | 95 | 95 | 95 | 95 | 95 |
| 38 | --- | --- | --- | --- | --- | --- | --- | --- | 190 | 190 | 190 | 190 | 190 | 190 | 190 | 190 |

## Explanations

**$d_1;d_{2min}$** = Min. bore diameter $d_1/d_2$

**$d_1;d_{2max}$** = Max. bore diameter $d_1/d_2$

**$d_{1k};d_{2kmin}$** = Min. bore diameter $d_1/d_2$ With keyway acc. to DIN 6885-1

**$d_{1k};d_{2kmax}$** = Max. bore diameter $d_1/d_2$ With keyway acc. to DIN 6885-1

**$C_1$** = Guided length in hub bore

**$D_1$** = Outer diameter

**$H_3$** = Length of damping module

**l** = Distance between center screw hole and hub end

**L** = Total length

**T** = Transmissible torque at given $T_A$

**$H_{es}$** = Hardness of the elastomeric spider

**$n_{max}$** = Max. rotation speed

**J** = Total moment of inertia

**Gw** = Weight

**$D_{G1}$** = Thread

**$T_{A1}$** = Tightened torque of clamping screw $D_{G1}$

## Ordering example

| Series Size | Bore diameter $d_1$ | Bore diameter $d_2$ | Spider hardness (optional) [1] | Spider bore $d_{bz}$ (optional) [1] | Further details |
|---|---|---|---|---|---|
| **GWE 5102-24** | **12** | **27** | **92 SH A** | **24** | * |

[1] If a different spider hardness is selected, the detailed technical data for the sprockets must be observed. See chapter „Elastomer Jaw Couplings RINGFEDER® GWE Technical description“ in Product Paper & Tech Paper „RINGFEDER® Elastomer Jaw Couplings“

* Keyway

Further information on
**RINGFEDER® GWE 5102**
on **www.ringfeder.com**

**Disclaimer of liability**
All technical details and notes are non-binding and cannot be used as a basis for legal claims. The user is obligated to determine whether the represented products meet his requirements. We reserve the right carry out modifications at any time in the interests of technical progress.

# Elastomer Jaw Couplings

# RINGFEDER® GWE 5103.1

## Miniature coupling with extended clamping hubs and single slit

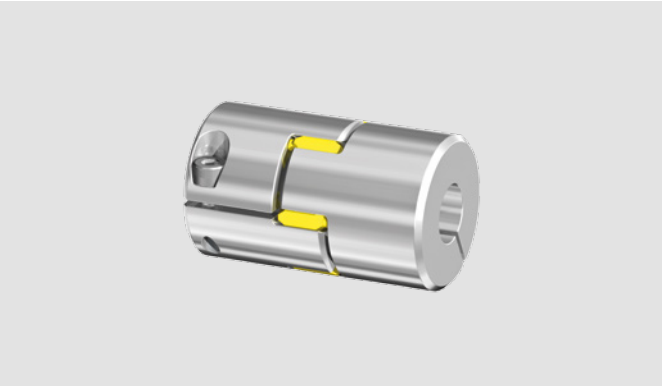

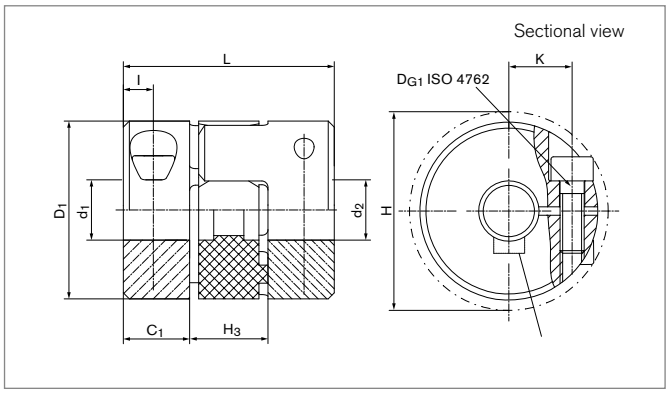


| Size | $d_1;d_2$ min-max | $d_{1k};d_{2k}$ min-max | $C_1$ | $D_1$ | H | $H_3$ | I | K | L |
|---|---|---|---|---|---|---|---|---|---|
| | mm | mm | mm | mm | mm | mm | mm | mm | mm |
| 5 | 2 - 4 | --- - --- | 5 | 10 | 11,5 | 5 | 2,5 | 3,2 | 15 |
| 7 | 3 - 7 | 6 - 7 | 7 | 14 | 16,5 | 8 | 3,5 | 5 | 22 |
| 9 | 3 - 11 | 6 - 11 | 10 | 20 | 23,5 | 10 | 5 | 7,3 | 30 |

Transmission of the couplings transmissible torque T can not longer be guaranteed for certain with borings < $d_{min}$. Types with borings < $d_{min}$, however, can be supplied.

Moment of inertia and weight (mass) are calculated with reference to the largest bore size.

| Size | T | $H_{es}$ | $n_{max}$ | J | Gw | $D_{G1}$ | $T_{A1}$ |
|---|---|---|---|---|---|---|---|
| | Nm | | 1/min | $10^{-3}kgm^2$ | kg | mm | Nm |
| 5 | 0,5 | 92 SH A | 38000 | 0,000034 | 0,005 | 1 x M1,6 | 0,25 |
| 7 | 1,2 | 92 SH A | 27000 | 0,000196 | 0,009 | 1 x M2 | 0,35 |
| 9 | 3 | 92 SH A | 19000 | 0,00108 | 0,015 | 1 x M2,5 | 0,75 |

To continue see next page

# Elastomer Jaw Couplings RINGFEDER® GWE 5103.1

### Transmissible torque T [Nm]

| Transmissible torque | | | | | | | | | | |
|---|---|---|---|---|---|---|---|---|---|---|
| Size | Ø2 | Ø3 | Ø4 | Ø5 | Ø6 | Ø7 | Ø8 | Ø9 | Ø10 | Ø11 |
| | Nm | | | | | | | | | |
| 5 | 0,5 | 0,5 | 0,5 | --- | --- | --- | --- | --- | --- | --- |
| 7 | --- | 0,8 | 1,1 | 1,2 | 1,2 | 1,2 | --- | --- | --- | --- |
| 9 | --- | 1,5 | 2 | 2,5 | 2,9 | 3 | 3 | 3 | 3 | 3 |

## Explanations

**$d_1;d_{2min}$** = Min. bore diameter $d_1/d_2$

**$d_1;d_{2max}$** = Max. bore diameter $d_1/d_2$

**$d_{1k};d_{2kmin}$** = Min. bore diameter $d_1/d_2$ With keyway acc. to DIN 6885-1

**$d_{1k};d_{2kmax}$** = Max. bore diameter $d_1/d_2$ With keyway acc. to DIN 6885-1

**$C_1$** = Guided length in hub bore

**$D_1$** = Outer diameter

**H** = Clearance diameter

**$H_3$** = Length of damping module

**l** = Distance between center screw hole and hub end

**K** = Distance shaft axis - clamping screw axis

**L** = Total length

**T** = Transmissible torque at given $T_A$

**$H_{es}$** = Hardness of the elastomeric spider

**$n_{max}$** = Max. rotation speed

**J** = Total moment of inertia

**Gw** = Weight

**$D_{G1}$** = Thread

**$T_{A1}$** = Tightened torque of clamping screw $D_{G1}$

## Ordering example

| Series Size | Bore diameter $d_1$ | Bore diameter $d_2$ | Spider hardness (optional) [1] | Spider bore $d_{bz}$ (optional) [1] | Further details |
|---|---|---|---|---|---|
| **GWE 5103.1-9** | **10** | **11** | **80 SH A** | **6,5** | * |

[1] If a different spider hardness is selected, the detailed technical data for the sprockets must be observed. See chapter „Elastomer Jaw Couplings RINGFEDER® GWE Technical description“ in Product Paper & Tech Paper „RINGFEDER® Elastomer Jaw Couplings“

* Keyway

Further information on
**RINGFEDER® GWE 5103.1**
on **www.ringfeder.com**

**Disclaimer of liability**
All technical details and notes are non-binding and cannot be used as a basis for legal claims. The user is obligated to determine whether the represented products meet his requirements. We reserve the right carry out modifications at any time in the interests of technical progress.

# Elastomer Jaw Couplings

# RINGFEDER® GWE 5104

## Servo-Insert coupling with clamping hubs and dual slits

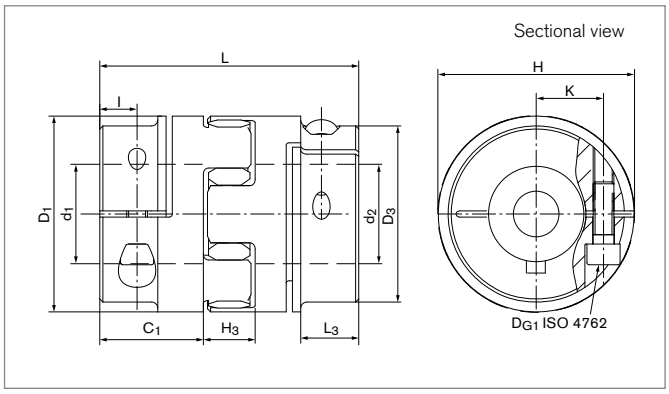


| Size | $d_1;d_2$ min-max | $d_{1k};d_{2k}$ min-max | $C_1$ | $D_1$ | $D_3$ | H | $H_3$ | l | K | L | $L_3$ |
|---|---|---|---|---|---|---|---|---|---|---|---|
| | mm | mm | mm | mm | mm | mm | mm | mm | mm | mm | mm |
| 14 | 5 - 16 | 5 - 16 | 11 | 30 | 30 | 32,2 | 13 | 5 | 11 | 35 | --- |
| 19 | 6 - 20 | 6 - 20 | 25 | 40 | 40 | 46 | 16 | 12 | 14,5 | 66 | --- |
| 24 | 10 - 32 | 10 - 32 | 30 | 55 | 55 | 57 | 18 | 10,5 | 20 | 78 | --- |
| 28 | 10 - 38 | 10 - 38 | 35 | 65 | 65 | 71 | 20 | 11,5 | 24,5 | 90 | --- |
| 38 | 12 - 48 | 12 - 48 | 45 | 80 | 80 | 83 | 24 | 15,5 | 30 | 114 | --- |
| 42 | 14 - 54 | 14 - 54 | 50 | 95 | 85 | 95 | 26 | 18 | 32,5 | 126 | 28 |
| 48 | 15 - 60 | 15 - 60 | 56 | 105 | 95 | 106 | 28 | 21 | 37 | 140 | 32 |
| 55 | 35 - 74 | 35 - 74 | 65 | 120 | 120 | 120 | 30 | 26 | 45 | 160 | |
| 65 | 35 - 80 | 35 - 80 | 75 | 135 | 135 | 135 | 35 | 28 | 50 | 185 | --- |
| 75 | 30 - 95 | 30 - 95 | 85 | 160 | 160 | 160 | 40 | 36 | 60 | 210 | --- |

Transmission of the couplings transmissible torque T can not longer be guaranteed for certain with borings < $d_{min}$. Types with borings < $d_{min}$, however, can be supplied.

Moment of inertia and weight (mass) are calculated with reference to the largest bore size.

| Size | T | $H_{es}$ | $n_{max}$ | J | Gw | $D_{G1}$ | $T_{A1}$ |
|---|---|---|---|---|---|---|---|
| | Nm | | 1/min | $10^{-3}kgm^2$ | kg | mm | Nm |
| 14 | 12,5 | 98 SH A | 13000 | 0,006 | 0,042 | 1 x M3 | 2 |
| 19 | 17 | 98 SH A | 10000 | 0,036 | 0,158 | 1 x M6 | 11 |
| 24 | 60 | 98 SH A | 7000 | 0,15 | 0,304 | 1 x M6 | 15 |
| 28 | 160 | 98 SH A | 6000 | 0,33 | 0,505 | 1 x M8 | 32 |
| 38 | 325 | 98 SH A | 5000 | 0,96 | 0,934 | 1 x M8 | 38 |
| 42 | 450 | 98 SH A | 4000 | 4,92 | 3,8 | 1 x M10 | 84 |
| 48 | 525 | 98 SH A | 3600 | 8,26 | 4,9 | 1 x M12 | 145 |
| 55 | 685 | 98 SH A | 3150 | 19,15 | 10,2 | 1 x M12 | 145 |
| 65 | 940 | 98 SH A | 2800 | 30,72 | 13,7 | 1 x M12 | 145 |
| 75 | 1920 | 98 SH A | 2350 | 66,68 | 21,34 | 1 x M16 | 295 |

To continue see next page

# Elastomer Jaw Couplings RINGFEDER® GWE 5104

### Transmissible torque T [Nm]

| Size | Ø5 | Ø6 | Ø8 | Ø10 | Ø12 | Ø14 | Ø16 | Ø20 | Ø25 | Ø30 | Ø35 | Ø40 | Ø45 | Ø50 | Ø55 | Ø60 | Ø65 | Ø70 | Ø80 | Ø90 | Ø95 |
|---|---|---|---|---|---|---|---|---|---|---|---|---|---|---|---|---|---|---|---|---|---|
| | Nm | | | | | | | | | | | | | | | | | | | | |
| 14 | 4,8 | 6,0 | 7,7 | 9,4 | 11 | 12,5 | 12,5 | --- | --- | --- | --- | --- | --- | --- | --- | --- | --- | --- | --- | --- | --- |
| 19 | --- | 16 | 17 | 17 | 17 | 17 | 17 | 17 | --- | --- | --- | --- | --- | --- | --- | --- | --- | --- | --- | --- | --- |
| 24 | --- | --- | --- | 37 | 43 | 50 | 56 | 60 | 60 | 60 | --- | --- | --- | --- | --- | --- | --- | --- | --- | --- | --- |
| 28 | --- | --- | --- | 61 | 72 | 83 | 94 | 114 | 138 | 160 | 160 | --- | --- | --- | --- | --- | --- | --- | --- | --- | --- |
| 38 | --- | --- | --- | --- | 87 | 100 | 113 | 138 | 168 | 197 | 225 | 251 | 277 | --- | --- | --- | --- | --- | --- | --- | --- |
| 42 | --- | --- | --- | --- | --- | 174 | 197 | 242 | 296 | 348 | 398 | 450 | 450 | --- | --- | --- | --- | --- | --- | --- | --- |
| 48 | --- | --- | --- | --- | --- | --- | 276 | 343 | 424 | 502 | 525 | 525 | 525 | 525 | 525 | --- | --- | --- | --- | --- | --- |
| 55 | --- | --- | --- | --- | --- | --- | --- | --- | --- | --- | 630 | 685 | 685 | 685 | 685 | 685 | 685 | 685 | --- | --- | --- |
| 65 | --- | --- | --- | --- | --- | --- | --- | --- | --- | --- | 634 | 714 | 791 | 866 | 940 | 940 | 940 | 940 | 940 | --- | --- |
| 75 | --- | --- | --- | --- | --- | --- | --- | --- | --- | --- | 998 | 1125 | 1250 | 1370 | 1489 | 1604 | 1718 | 1830 | 1920 | 1920 | 1920 |

## Explanations

**$d_1;d_{2min}$** = Min. bore diameter $d_1/d_2$

**$d_1;d_{2max}$** = Max. bore diameter $d_1/d_2$

**$d_{1k};d_{2kmin}$** = Min. bore diameter $d_1/d_2$ with keyway acc. to DIN 6885-1

**$d_{1k};d_{2kmax}$** = Max. bore diameter $d_1/d_2$ with keyway acc. to DIN 6885-1

**$C_1$** = Guided length in hub bore

**$D_1$** = Outer diameter

**$D_3$** = Outer diameter hub

**H** = Clearance diameter

**$H_3$** = Length of damping module

**l** = Distance between center screw hole and hub end

**K** = Distance shaft axis - clamping screw axis

**L** = Total length

**$L_3$** = Length

**T** = Transmissible torque at given $T_A$

**$H_{es}$** = Hardness of the elastomeric spider

**$n_{max}$** = Max. rotation speed

**J** = Total moment of inertia

**Gw** = Weight

**$D_{G1}$** = Thread

**$T_{A1}$** = Tightened torque of clamping screw $D_{G1}$

## Ordering example

| Series Size | Bore diameter $d_1$ | Bore diameter $d_2$ | Spider hardness (optional) [1] | Spider bore $d_{bz}$ (optional) [1] | Further details |
|---|---|---|---|---|---|
| **GWE 5104-42** | **40** | **41** | **64 SH D** | **42** | * |

[1] If a different spider hardness is selected, the detailed technical data for the sprockets must be observed. See chapter „Elastomer Jaw Couplings RINGFEDER® GWE Technical description“ in Product Paper & Tech Paper „RINGFEDER® Elastomer Jaw Couplings“

* Keyway

**Technical Information**

- Hubs up to size 48 made of aluminum, from size 55 made of steel

Further information on
**RINGFEDER® GWE 5104**
on **www.ringfeder.com**

**Disclaimer of liability**
All technical details and notes are non-binding and cannot be used as a basis for legal claims. The user is obligated to determine whether the represented products meet his requirements. We reserve the right carry out modifications at any time in the interests of technical progress.

# Elastomer Jaw Couplings

# RINGFEDER® GWE 5106

## Servo-Insert coupling with clamping hubs in split hub design

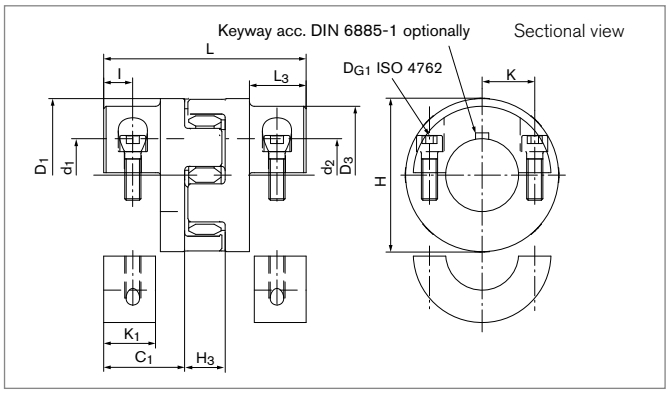


| Size | $d_1;d_2$ min-max | $d_{1k};d_{2k}$ min-max | $C_1$ | $D_1$ | $D_3$ | H | $H_3$ | l | K | $K_1$ | L | $L_3$ |
|---|---|---|---|---|---|---|---|---|---|---|---|---|
| | mm | mm | mm | mm | mm | mm | mm | mm | mm | mm | mm | mm |
| 14 | 5 - 16 | 5 - 16 | 11 | 30 | --- | 32,5 | 13 | 5 | 11 | 8 | 35 | --- |
| 19 | 6 - 20 | 6 - 20 | 25 | 40 | --- | 46 | 16 | 7 | 14,5 | 12 | 66 | --- |
| 24 | 10 - 32 | 10 - 32 | 30 | 55 | --- | 57 | 18 | 10,5 | 20 | 19 | 78 | --- |
| 28 | 10 - 38 | 10 - 38 | 35 | 65 | --- | 71 | 20 | 11,5 | 24,5 | 21,5 | 90 | --- |
| 38 | 12 - 48 | 12 - 48 | 45 | 80 | --- | 83 | 24 | 15,5 | 30 | 31 | 114 | --- |
| 42 | 14 - 54 | 14 - 54 | 50 | 95 | 85 | 95 | 26 | 18 | 32,5 | 32 | 126 | 28 |
| 48 | 15 - 60 | 15 - 60 | 56 | 105 | 95 | 106 | 28 | 21 | 36 | 38 | 140 | 32 |
| 55 | 35 - 74 | 35 - 74 | 65 | 120 | --- | 120 | 30 | 26 | 45 | 46,5 | 160 | --- |
| 65 | 35 - 80 | 35 - 80 | 75 | 135 | --- | 135 | 35 | 28 | 50 | 52 | 185 | --- |
| 75 | 30 - 95 | 30 - 95 | 85 | 160 | --- | 160 | 40 | 36 | 60 | 65,5 | 210 | --- |

Transmission of the couplings transmissible torque T can not longer be guaranteed for certain with borings < $d_{min}$. Types with borings < $d_{min}$, however, can be supplied.

Moment of inertia and weight (mass) are calculated with reference to the largest bore size.

| Size | T | $H_{es}$ | $n_{max}$ | J | Gw | $D_{G1}$ | $T_{A1}$ |
|---|---|---|---|---|---|---|---|
| | Nm | | 1/min | $10^{-3}kgm^2$ | kg | mm | Nm |
| 14 | 12,5 | 98 SH A | 13000 | 0,006 | 0,042 | 2 x M3 | 2 |
| 19 | 17 | 98 SH A | 10000 | 0,036 | 0,158 | 2 x M6 | 11 |
| 24 | 60 | 98 SH A | 7000 | 0,15 | 0,304 | 2 x M6 | 15 |
| 28 | 160 | 98 SH A | 6000 | 0,33 | 0,505 | 2 x M8 | 32 |
| 38 | 325 | 98 SH A | 5000 | 0,96 | 0,934 | 2 x M8 | 38 |
| 42 | 450 | 98 SH A | 4000 | 4,92 | 3,8 | 2 x M10 | 84 |
| 48 | 525 | 98 SH A | 3600 | 8,26 | 4,9 | 2 x M12 | 145 |
| 55 | 685 | 98 SH A | 3150 | 19,15 | 10,2 | 2 x M12 | 145 |
| 65 | 940 | 98 SH A | 2800 | 30,72 | 13,7 | 2 x M12 | 145 |
| 75 | 1920 | 98 SH A | 2350 | 66,68 | 21,34 | 2 x M16 | 295 |

To continue see next page

# Elastomer Jaw Couplings RINGFEDER® GWE 5106

### Transmissible torque T [Nm]

| Size | Ø5 | Ø6 | Ø8 | Ø10 | Ø12 | Ø14 | Ø16 | Ø20 | Ø25 | Ø30 | Ø35 | Ø40 | Ø45 | Ø50 | Ø55 | Ø60 | Ø65 | Ø70 | Ø80 | Ø90 | Ø95 |
|---|---|---|---|---|---|---|---|---|---|---|---|---|---|---|---|---|---|---|---|---|---|
| | Nm | | | | | | | | | | | | | | | | | | | | |
| 14 | 3,7 | 4,4 | 5,9 | 7,4 | 8,8 | 10,3 | 11,8 | --- | --- | --- | --- | --- | --- | --- | --- | --- | --- | --- | --- | --- | --- |
| 19 | --- | 12,6 | 17 | 17 | 17 | 17 | 17 | 17 | --- | --- | --- | --- | --- | --- | --- | --- | --- | --- | --- | --- | --- |
| 24 | --- | --- | --- | 29 | 34 | 40 | 46 | 57 | 60 | 60 | --- | --- | --- | --- | --- | --- | --- | --- | --- | --- | --- |
| 28 | --- | --- | --- | 46 | 55 | 65 | 74 | 92 | 116 | 139 | 162 | --- | --- | --- | --- | --- | --- | --- | --- | --- | --- |
| 38 | --- | --- | --- | --- | 66 | 77 | 88 | 110 | 137 | 165 | 192 | 219 | 247 | --- | --- | --- | --- | --- | --- | --- | --- |
| 42 | --- | --- | --- | --- | --- | 139 | 159 | 198 | 248 | 298 | 347 | 397 | 446 | --- | --- | --- | --- | --- | --- | --- | --- |
| 48 | --- | --- | --- | --- | --- | --- | 233 | 292 | 364 | 437 | 510 | 525 | 525 | 525 | 525 | --- | --- | --- | --- | --- | --- |
| 55 | --- | --- | --- | --- | --- | --- | --- | --- | --- | --- | 510 | 583 | 656 | 685 | 685 | 685 | 685 | 685 | --- | --- | --- |
| 65 | --- | --- | --- | --- | --- | --- | --- | --- | --- | --- | 510 | 583 | 656 | 728 | 801 | 874 | 940 | 940 | 940 | --- | --- |
| 75 | --- | --- | --- | --- | --- | --- | --- | --- | --- | --- | 783 | 895 | 1007 | 1119 | 1231 | 1343 | 1455 | 1567 | 1790 | 1920 | 1920 |

## Explanations

**$d_1;d_{2min}$** = Min. bore diameter $d_1/d_2$

**$d_1;d_{2max}$** = Max. bore diameter $d_1/d_2$

**$d_{1k};d_{2kmin}$** = Min. bore diameter $d_1/d_2$ with keyway acc. to DIN 6885-1

**$d_{1k};d_{2kmax}$** = Max. bore diameter $d_1/d_2$ with keyway acc. to DIN 6885-1

**$C_1$** = Guided length in hub bore

**$D_1$** = Outer diameter

**H** = Clearance diameter

**$H_3$** = Length of damping module

**l** = Distance between center screw hole and hub end

**K** = Distance shaft axis - clamping screw axis

**$K_1$** = Clamping length

**L** = Total length

**$L_3$** = Length

**T** = Transmissible torque at given $T_A$

**$H_{es}$** = Hardness of the elastomeric spider

**$n_{max}$** = Max. rotation speed

**J** = Total moment of inertia

**Gw** = Weight

**$D_{G1}$** = Thread

**$T_{A1}$** = Tightened torque of clamping screw $D_{G1}$

## Ordering example

| Series Size | Bore diameter $d_1$ | Bore diameter $d_2$ | Spider hardness (optional) [1] | Spider bore $d_{bz}$ (optional) [1] | Further details |
|---|---|---|---|---|---|
| **GWE 5106-42** | **40** | **41** | **92 SH A** | **42** | * |

[1] If a different spider hardness is selected, the detailed technical data for the sprockets must be observed.
See chapter „Elastomer Jaw Couplings RINGFEDER® GWE Technical description“ in Product Paper & Tech Paper „RINGFEDER® Elastomer Jaw Couplings“

* Keyway

**Technical Information**

- Hubs up to size 48 made of aluminum, from size 55 made of steel

Further information on
**RINGFEDER® GWE 5106**
on **www.ringfeder.com**

**Disclaimer of liability**
All technical details and notes are non-binding and cannot be used as a basis for legal claims. The user is obligated to determine whether the represented products meet his requirements. We reserve the right carry out modifications at any time in the interests of technical progress.

# Elastomer Jaw Couplings
# RINGFEDER® GWE 5112
## Servo-Insert coupling with outer cone

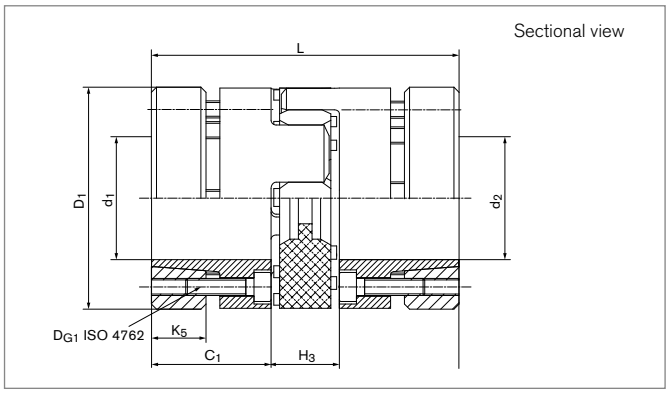


| Size | $d_1$;$d_2$ min-max | $C_1$ | $D_1$ | $H_3$ | $K_5$ | L |
|---|---|---|---|---|---|---|
| | mm | mm | mm | mm | mm | mm |
| 14 | 6 - 14 | 18,5 | 32 | 13 | 8 | 50 |
| 19 | 8 - 20 | 25 | 40 | 16 | 10 | 66 |
| 24 | 11 - 25 | 30 | 55 | 18 | 13 | 78 |
| 28 | 15 - 36 | 35 | 65 | 20 | 16 | 90 |
| 38 | 20 - 41 | 45 | 80 | 24 | 22 | 114 |
| 42 | 25 - 50 | 50 | 95 | 26 | 25 | 126 |
| 48 | 28 - 55 | 56 | 105 | 28 | 28 | 140 |

Transmission of the couplings transmissible torque T can not longer be guaranteed for certain with borings < $d_{min}$. Types with borings < $d_{min}$, however, can be supplied.

Moment of inertia and weight (mass) are calculated with reference to the largest bore size.

| Size | T | $H_{es}$ | $n_{max}$ | J | Gw | $D_{G1}$ | $T_{A1}$ |
|---|---|---|---|---|---|---|---|
| | Nm | | 1/min | $10^{-3}kgm^2$ | kg | mm | Nm |
| 14 | 12,5 | 98 SH A | 25400 | 0,014 | 0,042 | 4 x M3 | 1,8 |
| 19 | 17 | 98 SH A | 19000 | 0,063 | 0,158 | 6 x M4 | 3 |
| 24 | 60 | 98 SH A | 13800 | 0,26 | 0,304 | 4 x M5 | 6 |
| 28 | 160 | 98 SH A | 11700 | 0,63 | 0,505 | 8 x M5 | 6 |
| 38 | 325 | 98 SH A | 9550 | 1,96 | 0,934 | 8 x M6 | 10 |
| 42 | 450 | 98 SH A | 8050 | 6,43 | 3,8 | 4 x M8 | 35 |
| 48 | 525 | 98 SH A | 7200 | 10,54 | 4,9 | 4 x M10 | 69 |

To continue see next page

# Elastomer Jaw Couplings RINGFEDER® GWE 5112

### Transmissible torque T [Nm]

| Size | Ø6 | Ø10 | Ø11 | Ø13 | Ø14 | Ø15 | Ø17 | Ø19 | Ø20 | Ø24 | Ø25 | Ø27 | Ø30 | Ø32 | Ø36 | Ø38 | Ø42 | Ø44 | Ø48 | Ø50 | Ø55 |
|---|---|---|---|---|---|---|---|---|---|---|---|---|---|---|---|---|---|---|---|---|---|
| | Nm | | | | | | | | | | | | | | | | | | | | |
| 14 | 3,6 | 9 | 12,5 | 12,5 | 12,5 | --- | --- | --- | --- | --- | --- | --- | --- | --- | --- | --- | --- | --- | --- | --- | --- |
| 19 | --- | 17 | 17 | 17 | 17 | 17 | 17 | 17 | 17 | --- | --- | --- | --- | --- | --- | --- | --- | --- | --- | --- | --- |
| 24 | --- | --- | 22 | 37 | 46 | 56 | 60 | 60 | 60 | 60 | 60 | --- | --- | --- | --- | --- | --- | --- | --- | --- | --- |
| 28 | --- | --- | --- | --- | --- | 56 | 68 | 114 | 134 | 160 | 160 | 160 | 160 | 160 | 160 | --- | --- | --- | --- | --- | --- |
| 38 | --- | --- | --- | --- | --- | --- | --- | --- | 134 | 230 | 261 | 325 | 325 | 325 | 325 | 325 | --- | --- | --- | --- | --- |
| 42 | --- | --- | --- | --- | --- | --- | --- | --- | --- | --- | 260 | 329 | 450 | 450 | 450 | 450 | 450 | 450 | 450 | 450 | --- |
| 48 | --- | --- | --- | --- | --- | --- | --- | --- | --- | --- | --- | 326 | 450 | 525 | 525 | 525 | 525 | 525 | 525 | 525 | 525 |

## Explanations

**$d_1;d_{2min}$** = Min. bore diameter $d_1/d_2$

**$d_1;d_{2max}$** = Max. bore diameter $d_1/d_2$

**$d_{1k};d_{2kmin}$** = Min. bore diameter $d_1/d_2$ with keyway acc. to DIN 6885-1

**$d_{1k};d_{2kmax}$** = Max. bore diameter $d_1/d_2$ with keyway acc. to DIN 6885-1

**$C_1$** = Guided length in hub bore

**$D_1$** = Outer diameter

**$H_3$** = Length of damping module

**$K_5$** = Width of clamping ring

**L** = Total length

**T** = Transmissible torque at given $T_A$

**$H_{es}$** = Hardness of the elastomeric spider

**$n_{max}$** = Max. rotation speed

**J** = Total moment of inertia

**Gw** = Weight

**$D_{G1}$** = Thread

**$T_{A1}$** = Tightened torque of clamping screw $D_{G1}$

## Ordering example

| Series Size | Bore diameter $d_1$ | Bore diameter $d_2$ | Spider hardness (optional) [1] | Spider bore $d_{bz}$ (optional) [1] |
|---|---|---|---|---|
| **GWE 5112-42** | **32** | **41** | **64 SH D** | **42** |

[1] If a different spider hardness is selected, the detailed technical data for the sprockets must be observed. See chapter „Elastomer Jaw Couplings RINGFEDER® GWE Technical description“ in Product Paper & Tech Paper „RINGFEDER® Elastomer Jaw Couplings“

**Technical Information**

- Hubs up to size 38 made of aluminum, from size 42 made of steel

Further information on
**RINGFEDER® GWE 5112**
on **www.ringfeder.com**

**Disclaimer of liability**
All technical details and notes are non-binding and cannot be used as a basis for legal claims. The user is obligated to determine whether the represented products meet his requirements. We reserve the right carry out modifications at any time in the interests of technical progress.

# Elastomer Jaw Couplings

# RINGFEDER® GWE 5113

## Servo-Insert coupling with clamping hubs, short length and single slit

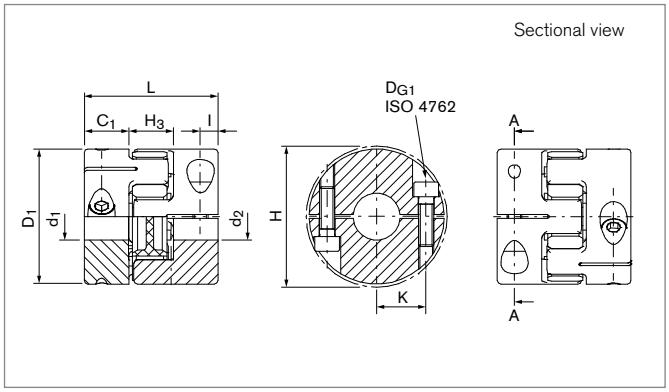


| Size | $d_1;d_2$ min-max Without keyway | $d_{1k};d_{2k}$ min-max With keyway | $C_1$ | $D_1$ | H | $H_3$ | l | K | L |
|---|---|---|---|---|---|---|---|---|---|
| | mm | mm | mm | mm | mm | mm | mm | mm | mm |
| 12 | 4 - 12 | 6 - 12 | 11 | 24,5 | 26 | 12 | 5 | 8,1 | 34 |
| 14 | 5 - 15 | 6 - 15 | 9,5 | 29,5 | 33 | 13 | 5 | 10,5 | 32 |
| 19 | 8 - 20 | 8 - 20 | 17 | 39,5 | 45 | 16 | 8 | 14 | 50 |
| 24 | 10 - 32 | 10 - 32 | 18 | 54,5 | 57 | 18 | 7 | 20 | 54 |
| 28 | 14 - 35 | 14 - 35 | 21 | 64,5 | 68 | 20 | 9 | 23,8 | 62 |
| 38 | 15 - 45 | 15 - 45 | 26,5 | 79,5 | 86 | 23 | 13 | 29,5 | 76 |
| 42 | 20 - 56 | 20 - 56 | 38 | 94,5 | 95 | 26 | 13,5 | 35 | 102 |

Larger bore diameters ($d_1$, $d_2$) than specified in the table above can be realized in specific case of need. Please consult our experts in this matter. Transmission of the couplings' transmissible torque T can not longer be guaranteed for certain with borings < $d_{min}$. Types with borings < $d_{min}$, however, can be supplied. Moment of inertia and weight (mass) are calculated with reference to the largest bore size.

| Size | T | $n_{max}$ | J | $H_{es}$ | $D_{G1}$ | $T_{A1}$ | Gw |
|---|---|---|---|---|---|---|---|
| | Nm | 1/min | $10^{-3}kgm^2$ | | mm | Nm | kg |
| 12 | 9 | 15000 | 0,00296 | 98 SH A | 2 x M3 | 2,1 | 0,033 |
| 14 | 12,5 | 13000 | 0,006 | 98 SH A | 2 x M4 | 5 | 0,05 |
| 19 | 17 | 10000 | 0,029 | 98 SH A | 2 x M6 | 14 | 0,14 |
| 24 | 60 | 7000 | 0,104 | 98 SH A | 2 x M6 | 15 | 0,21 |
| 28 | 160 | 6000 | 0,250 | 98 SH A | 2 x M8 | 35 | 0,377 |
| 38 | 325 | 5000 | 0,713 | 98 SH A | 2 x M10 | 49 | 0,694 |
| 42 | 450 | 4000 | 1,793 | 98 SH A | 2 x M10 | 69 | 1,21 |

To continue see next page

## Elastomer Jaw Couplings RINGFEDER® GWE 5113

### Transmissible torque T [Nm] of the Shaft-Hub-Connection

| Size | Ø3 | Ø4 | Ø5 | Ø6 | Ø8 | Ø10 | Ø12 | Ø14 | Ø15 | Ø18 | Ø20 | Ø25 | Ø26 | Ø28 | Ø30 | Ø35 | Ø40 | Ø45 | Ø50 | Ø55 | Ø56 |
|---|---|---|---|---|---|---|---|---|---|---|---|---|---|---|---|---|---|---|---|---|---|
| | Nm | | | | | | | | | | | | | | | | | | | | |
| 12 | --- | 3,5 | 4,3 | 5,1 | 6,8 | 8,4 | 9 | --- | --- | --- | --- | --- | --- | --- | --- | --- | --- | --- | --- | --- | --- |
| 14 | --- | --- | 8,4 | 10,2 | 12,5 | 12,5 | 12,5 | 12,5 | 12,5 | --- | --- | --- | --- | --- | --- | --- | --- | --- | --- | --- | --- |
| 19 | --- | --- | --- | --- | 17 | 17 | 17 | 17 | 17 | 17 | 17 | --- | --- | --- | --- | --- | --- | --- | --- | --- | --- |
| 24 | --- | --- | --- | --- | --- | 35 | 42 | 48 | 52 | 60 | 60 | 60 | 60 | 60 | 60 | --- | --- | --- | --- | --- | --- |
| 28 | --- | --- | --- | --- | --- | --- | --- | 96 | 102 | 121 | 133 | 160 | 160 | 160 | 160 | 160 | --- | --- | --- | --- | --- |
| 38 | --- | --- | --- | --- | --- | --- | --- | --- | 143 | 172 | 191 | 238 | 248 | 267 | 286 | 325 | 325 | 325 | --- | --- | --- |
| 42 | --- | --- | --- | --- | --- | --- | --- | --- | --- | --- | 221 | 277 | 288 | 310 | 332 | 387 | 443 | 450 | 450 | 450 | 450 |

## Explanations

**$d_1$;$d_{2min}$** = Min. bore diameter $d_1/d_2$

**$d_1$;$d_{2max}$** = Max. bore diameter $d_1/d_2$

**$d_{1k}$;$d_{2kmin}$** = Min. bore diameter $d_1/d_2$ With keyway acc. to DIN 6885-1

**$d_{1k}$;$d_{2kmax}$** = Max. bore diameter $d_1/d_2$ With keyway acc. to DIN 6885-1

**$C_1$** = Guided length in hub bore

**$D_1$** = Outer diameter

**H** = Clearance diameter

**$H_3$** = Length of damping module

**l** = Distance between center screw hole and hub end

**K** = Distance shaft axis - clamping screw axis

**L** = Total length

**T** = Transmissible torque at given $T_A$

**$n_{max}$** = Max. rotation speed

**J** = Total moment of inertia

**$H_{es}$** = Hardness of the elastomeric spider

**$D_{G1}$** = Thread

**$T_{A1}$** = Tightened torque of clamping screw $D_{G1}$

**Gw** = Weight

## Ordering example

| Series Size | Bore diameter $d_1$ | Bore diameter $d_2$ | Spider hardness (optional) [1] | Spider bore $d_{bz}$ (optional) [1] | Further details |
|---|---|---|---|---|---|
| **GWE 5113-42** | **20** | **42** | **98 SH A** | **42** | * |

[1] If a different spider hardness is selected, the detailed technical data for the sprockets must be observed. See chapter „Elastomer Jaw Couplings RINGFEDER® GWE Technical description“ in Product Paper & Tech Paper „RINGFEDER® Elastomer Jaw Couplings“

* Keyway or stainless steel

Further information on
**RINGFEDER® GWE 5113**
on **www.ringfeder.com**

**Disclaimer of liability**
All technical details and notes are non-binding and cannot be used as a basis for legal claims. The user is obligated to determine whether the represented products meet his requirements. We reserve the right carry out modifications at any time in the interests of technical progress.

# Elastomer Jaw Couplings

# RINGFEDER® GWE 5117

## Servo-Insert coupling with clamping hubs and expanding clamps

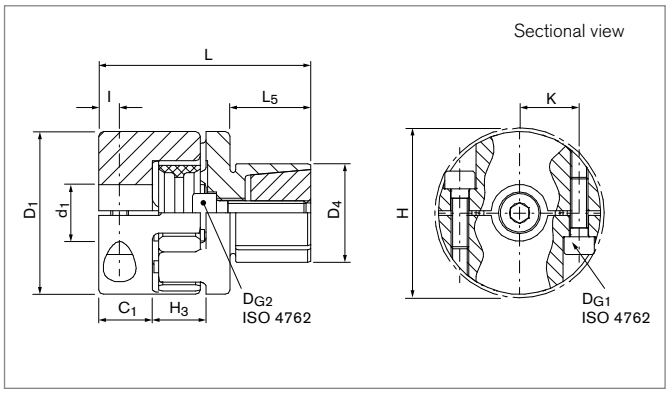


| Size | $d_1$ min-max | $d_{1k}$ min-max | $C_1$ | $D_1$ | $D_4$ min-max | H | $H_3$ | l | K | L | $L_5$ |
|---|---|---|---|---|---|---|---|---|---|---|---|
| | mm | mm | mm | mm | mm | mm | mm | mm | mm | mm | mm |
| 12 | 4 - 12 | 6 - 12 | 11 | 24,5 | 10 - 15 | 26 | 12 | 5 | 8,1 | 42 | 12 |
| 14 | 5 - 15 | 6 - 15 | 9,5 | 29,5 | 13 - 25 | 33 | 13 | 5 | 10,5 | 47,5 | 20 |
| 19 | 8 - 20 | 8 - 20 | 17 | 39,5 | 14 - 30 | 45 | 16 | 8 | 14 | 65,5 | 25 |
| 24 | 10 - 32 | 10 - 32 | 18 | 54,5 | 23 - 36 | 57 | 18 | 7 | 20 | 71 | 27 |
| 28 | 14 - 35 | 14 - 35 | 21 | 64,5 | 26 - 42 | 68 | 19 | 9 | 23,8 | 82 | 32 |

Transmission of the couplings transmissible torque T can not longer be guaranteed for certain with borings < $d_{min}$. Types with borings < $d_{min}$, however, can be supplied.

Moment of inertia and weight (mass) are calculated with reference to the largest bore size.

| Size | T | $H_{es}$ | $n_{max}$ | J | Gw | $D_{G1}$ | $T_{A1}$ | $D_{G2}$ | $T_{A2}$ |
|---|---|---|---|---|---|---|---|---|---|
| | Nm | | 1/min | $10^{-3}$ kgm² | kg | mm | Nm | mm | Nm |
| 12 | 9 | 98 SH A | 15000 | 0,0043 | 0,06 | 2 x M3 | 2,1 | 1 x M4 | 4 |
| 14 | 12,5 | 98 SH A | 13000 | 0,008 | 0,09 | 2 x M4 | 5 | 1 x M5 | 9 |
| 19 | 17 | 98 SH A | 10000 | 0,036 | 0,18 | 2 x M6 | 14 | 1 x M6 | 12 |
| 24 | 60 | 98 SH A | 7000 | 0,138 | 0,38 | 2 x M6 | 15 | 1 x M8 | 32 |
| 28 | 160 | 98 SH A | 6000 | 0,318 | 0,67 | 2 x M8 | 35 | 1 x M10 | 60 |

To continue see next page

## Elastomer Jaw Couplings RINGFEDER® GWE 5117

### Transmissible torque T [Nm]

| Size | Ø4 | Ø5 | Ø6 | Ø8 | Ø10 | Ø12 | Ø14 | Ø15 | Ø18 | Ø20 | Ø25 | Ø26 | Ø28 | Ø30 | Ø35 |
|---|---|---|---|---|---|---|---|---|---|---|---|---|---|---|---|
| | | | | | | | | | | | | | | | |
| 12 | 3,5 | 4,3 | 5,1 | 6,8 | 8,4 | 9 | --- | --- | --- | --- | --- | --- | --- | --- | --- |
| 14 | --- | 8,4 | 10,2 | 12,5 | 12,5 | 12,5 | 12,5 | 12,5 | --- | --- | --- | --- | --- | --- | --- |
| 19 | --- | --- | --- | 17 | 17 | 17 | 17 | 17 | 17 | 17 | --- | --- | --- | --- | --- |
| 24 | --- | --- | --- | --- | 35 | 42 | 48 | 52 | 60 | 60 | 60 | 60 | 60 | 60 | --- |
| 28 | --- | --- | --- | --- | --- | --- | 96 | 102 | 121 | 133 | 160 | 160 | 160 | 160 | 160 |

## Explanations

**$d_{1min}$** = Min. bore diameter $d_1$

**$d_{1max}$** = Max. bore diameter $d_1$

**$d_{1kmin}$** = Min. bore diameter $d_1$ with keyway acc. to DIN 6885-1

**$d_{1kmax}$** = Max. bore diameter $d_1$ with keyway acc. to DIN 6885-1

**$C_1$** = Guided length in hub bore

**$D_1$** = Outer diameter

**$D_{4\ min}$** = Min. outer diameter of the cone hub

**$D_{4\ max}$** = Max. outer diameter of the cone hub

**H** = Clearance diameter

**$H_3$** = Length of damping module

**l** = Distance between center screw hole and hub end

**K** = Distance shaft axis - clamping screw axis

**L** = Total length

**$L_5$** = Expending mandrel length

**T** = Transmissible torque at given $T_A$

**$H_{es}$** = Hardness of the elastomeric spider

**$n_{max}$** = Max. rotation speed

**J** = Total moment of inertia

**Gw** = Weight

**$D_{G1}$** = Thread

**$T_{A1}$** = Tightened torque of clamping screw $D_{G1}$

**$D_{G2}$** = Thread

**$T_{A2}$** = Tightened torque of clamping screw $D_{G2}$

## Ordering example

| Series Size | Bore diameter $d_1$ | Outer diameter of the cone hub $D_4$ | Spider hardness (optional) [1] | Spider bore $d_{bz}$ (optional) [1] | Further details |
|---|---|---|---|---|---|
| **GWE 5117-24** | **25** | **30** | **92 SH A** | **24** | * |

[1] If a different spider hardness is selected, the detailed technical data for the sprockets must be observed. See chapter „Elastomer Jaw Couplings RINGFEDER® GWE Technical description“ in Product Paper & Tech Paper „RINGFEDER® Elastomer Jaw Couplings“

* Keyway

Further information on
**RINGFEDER® GWE 5117**
on **www.ringfeder.com**

**Disclaimer of liability**
All technical details and notes are non-binding and cannot be used as a basis for legal claims. The user is obligated to determine whether the represented products meet his requirements. We reserve the right carry out modifications at any time in the interests of technical progress.

# Elastomer Jaw Couplings

# RINGFEDER® GWE Z5104.1

## Servo-Insert coupling with clamping hubs for large shaft spacings

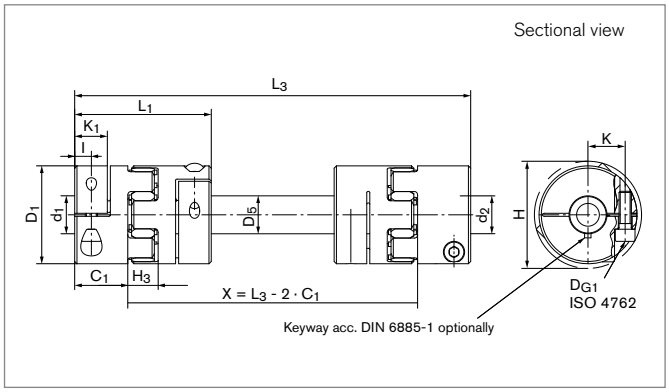


| Size | $d_1;d_2$ min-max | $d_{1k};d_{2k}$ min-max | $C_1$ | $D_1$ | $D_5$ | H | $H_3$ | l | K | $K_1$ | $L_1$ | $L_3$ min-max |
|---|---|---|---|---|---|---|---|---|---|---|---|---|
| | mm | mm | mm | mm | mm | mm | mm | mm | mm | mm | mm | mm |
| 14 | 5 - 16 | 5 - 16 | 11 | 30 | 16 | 31,6 | 13 | 5 | 11 | 11 | 35 | 80 - 2000 |
| 19 | 6 - 20 | 6 - 20 | 25 | 40 | 20 | 46 | 16 | 12 | 14,5 | 25 | 66 | 135 - 2000 |
| 24 | 10 - 32 | 10 - 32 | 30 | 55 | 25 | 57 | 18 | 10,5 | 20 | 19 | 78 | 160 - 2000 |
| 28 | 10 - 38 | 10 - 38 | 35 | 65 | 30 | 71 | 20 | 11,5 | 24,5 | 21,5 | 90 | 185 - 2000 |
| 38 | 12 - 48 | 12 - 48 | 45 | 80 | 40 | 83 | 24 | 15,5 | 30 | 31 | 114 | 230 - 2000 |
| 42 | 14 - 54 | 14 - 54 | 50 | 95 | 40 | 95 | 26 | 18 | 32,5 | 32 | 126 | 255 - 2000 |
| 48 | 15 - 60 | 15 - 60 | 56 | 105 | 50 | 104,5 | 28 | 21 | 36 | 38 | 140 | 290 - 2000 |

Transmission of the couplings transmissible torque T can not longer be guaranteed for certain with borings < $d_{min}$. Types with borings < $d_{min}$, however, can be supplied.

| Size | T | $C_m$ | $H_{es}$ | $D_{G1}$ | $T_{A1}$ |
|---|---|---|---|---|---|
| | Nm | Nm/rad | | mm | Nm |
| 14 | 12,5 | 510 | 98 SH A | 1 x M3 | 2 |
| 19 | 17 | 966 | 98 SH A | 1 x M6 | 11 |
| 24 | 60 | 2635 | 98 SH A | 1 x M6 | 15 |
| 28 | 160 | 5549 | 98 SH A | 1 x M8 | 32 |
| 38 | 325 | 15470 | 98 SH A | 1 x M8 | 38 |
| 42 | 450 | 15470 | 98 SH A | 1 x M10 | 84 |
| 48 | 525 | 43514 | 98 SH A | 1 x M12 | 145 |

To continue see next page

## Elastomer Jaw Couplings RINGFEDER® GWE Z5104.1

### Transmissible torque T [Nm]

| Size | Ø5 | Ø6 | Ø8 | Ø9 | Ø10 | Ø12 | Ø14 | Ø15 | Ø16 | Ø18 | Ø20 | Ø22 | Ø24 | Ø25 | Ø30 | Ø35 | Ø40 | Ø45 | Ø50 | Ø55 | Ø58 |
|---|---|---|---|---|---|---|---|---|---|---|---|---|---|---|---|---|---|---|---|---|---|
| | Nm | | | | | | | | | | | | | | | | | | | | |
| 14 | 4,8 | 6,0 | 7,7 | 8,6 | 9,4 | 11 | 12,5 | 12,5 | 12,5 | --- | --- | --- | --- | --- | --- | --- | --- | --- | --- | --- | --- |
| 19 | --- | 16 | 17 | 17 | 17 | 17 | 17 | 17 | 17 | 17 | 17 | --- | --- | --- | --- | --- | --- | --- | --- | --- | --- |
| 24 | --- | --- | --- | --- | 37 | 43 | 50 | 53 | 56 | 60 | 60 | 60 | 60 | 60 | 60 | --- | --- | --- | --- | --- | --- |
| 28 | --- | --- | --- | --- | 61 | 72 | 83 | 88 | 94 | 104 | 114 | 124 | 134 | 138 | 160 | 160 | --- | --- | --- | --- | --- |
| 38 | --- | --- | --- | --- | --- | 87 | 100 | 107 | 113 | 126 | 138 | 151 | 163 | 168 | 197 | 225 | 251 | 277 | --- | --- | --- |
| 42 | --- | --- | --- | --- | --- | --- | 174 | 186 | 197 | 220 | 242 | 264 | 285 | 296 | 348 | 398 | 450 | 450 | --- | --- | --- |
| 48 | --- | --- | --- | --- | --- | --- | --- | --- | 276 | 309 | 343 | 376 | 408 | 424 | 502 | 525 | 525 | 525 | 525 | 525 | 525 |

**Critical bending speed for line shafts** (operating speed = critical bending speed / 1,4)

**GWE Z5104.1**

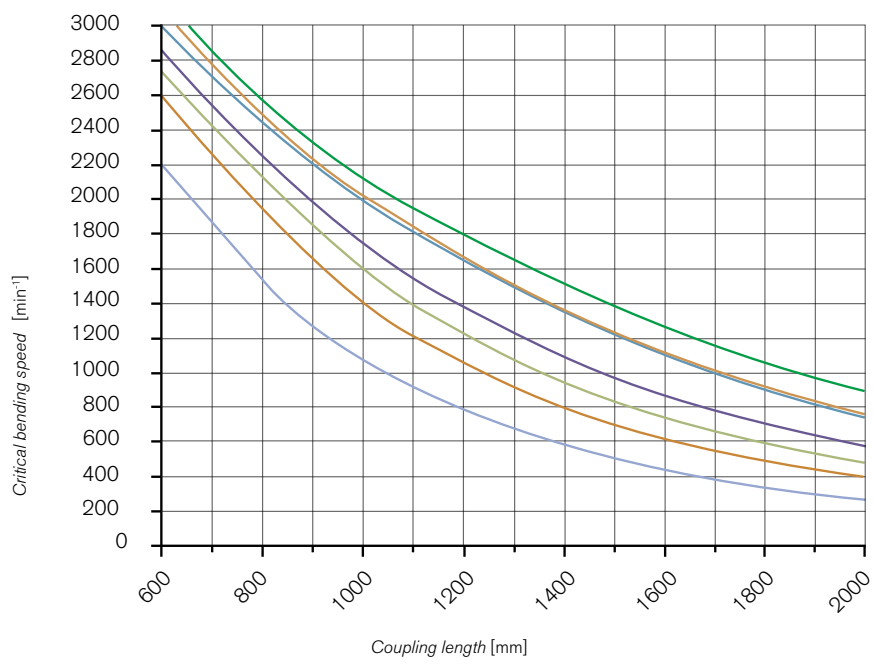


**Legend**

- *Size* 48
- *Size* 42
- *Size* 38
- *Size* 28
- *Size* 24
- *Size* 19
- *Size* 14

To continue see next page

# Elastomer Jaw Couplings RINGFEDER® GWE Z5104.1

## Explanations

| | | | | | |
|---|---|---|---|---|---|
| $d_1;d_{2min}$ | = Min. bore diameter $d_1/d_2$ | H | = Clearance diameter | $L_{3max}$ | = Max. length of line shaft |
| $d_1;d_{2max}$ | = Max. bore diameter $d_1/d_2$ | $H_3$ | = Length of damping module | T | = Transmissible torque at given $T_A$ |
| $d_{1k};d_{2kmin}$ | = Min. bore diameter $d_1/d_2$ with keyway acc. to DIN 6885-1 | l | = Distance between center screw hole and hub end | $C_m$ | = Torsional stiffness of extension tube per meter |
| $d_{1k};d_{2kmax}$ | = Max. bore diameter $d_1/d_2$ with keyway acc. to DIN 6885-1 | K | = Distance shaft axis - clamping screw axis | $H_{es}$ | = Hardness of the elastomeric spider |
| $C_1$ | = Guided length in hub bore | $K_1$ | = Clamping length | $D_{G1}$ | = Thread |
| $D_1$ | = Outer diameter | $L_1$ | = Length of coupling | $T_{A1}$ | = Tightened torque of clamping screw $D_{G1}$ |
| $D_5$ | = Tube diameter | $L_{3min}$ | = Min. length of line shaft | | |

## Ordering example

| Series Size | Bore diameter $d_1$ | Bore diameter $d_2$ | Length of Line Shaft $L_3$ | Spider hardness (optional) [1] | Spider bore $d_{bz}$ (optional) [1] | Further details |
|---|---|---|---|---|---|---|
| **GWE Z5104.1-14** | **8** | **10** | **1000** | **64 SH D** | **8,5** | * |

[1] If a different spider hardness is selected, the detailed technical data for the sprockets must be observed. See chapter „Elastomer Jaw Couplings RINGFEDER® GWE Technical description“ in Product Paper & Tech Paper „RINGFEDER® Elastomer Jaw Couplings“

* Keyway

Further information on
**RINGFEDER® GWE Z5104.1**
on **www.ringfeder.com**

**Disclaimer of liability**
All technical details and notes are non-binding and cannot be used as a basis for legal claims. The user is obligated to determine whether the represented products meet his requirements. We reserve the right carry out modifications at any time in the interests of technical progress.

# Elastomer Jaw Couplings

# RINGFEDER® GWE Z5106.1

## Servo-Insert coupling with clamping hubs in split hub design for large shaft spacings

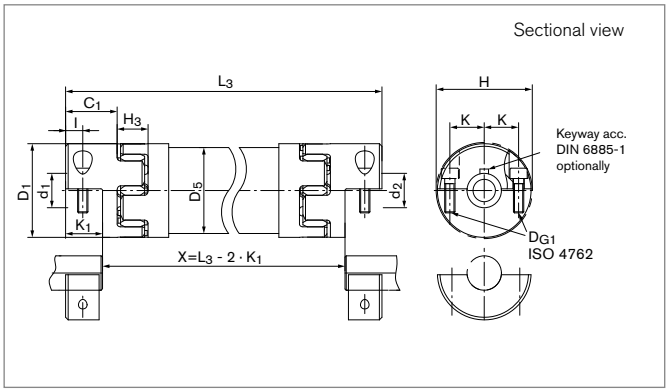


| Size | $d_1$;$d_2$ min-max | $d_{1k}$;$d_{2k}$ min-max | $C_1$ | $D_1$ | $D_5$ | H | $H_3$ | l | K | $K_1$ | $L_3$ min-max |
|---|---|---|---|---|---|---|---|---|---|---|---|
| | mm | mm | mm | mm | mm | mm | mm | mm | mm | mm | mm |
| 14 | 5 - 16 | 5 - 16 | 11,0 | 30 | 30 | 32,0 | 13 | 5,0 | 11,0 | 9,0 | 85 - 3000 |
| 19 | 6 - 20 | 6 - 20 | 25,5 | 40 | 40 | 46,0 | 16 | 8,0 | 14,5 | 19,0 | 146 - 3000 |
| 24 | 10 - 32 | 10 - 32 | 30,0 | 55 | 50 | 57,0 | 18 | 10,5 | 20,0 | 21,0 | 180 - 3000 |
| 28 | 10 - 38 | 10 - 38 | 35,0 | 65 | 60 | 71,0 | 20 | 11,0 | 24,5 | 23,5 | 216 - 3000 |
| 38 | 12 - 48 | 12 - 48 | 45,0 | 80 | 80 | 83,0 | 24 | 15,5 | 30,0 | 33,0 | 266 - 3000 |
| 42 | 14 - 54 | 14 - 54 | 50,0 | 95 | 90 | 95,0 | 26 | 18,0 | 32,5 | 35,0 | 280 - 3000 |
| 48 | 15 - 60 | 15 - 60 | 57,5 | 105 | 100 | 104,5 | 28 | 21,0 | 37,0 | 41,0 | 296 - 3000 |

| Size | T | $C_m$ | $H_{es}$ | $D_{G1}$ | $T_{A1}$ |
|---|---|---|---|---|---|
| | Nm | Nm/rad | | mm | Nm |
| 14 | 12,5 | 1526 | 98 SH A | 2 x M3 | 2 |
| 19 | 17 | 3244 | 98 SH A | 2 x M6 | 11 |
| 24 | 60 | 6631 | 98 SH A | 2 x M6 | 15 |
| 28 | 160 | 11815 | 98 SH A | 2 x M8 | 32 |
| 38 | 325 | 44929 | 98 SH A | 2 x M8 | 38 |
| 42 | 450 | 75797 | 98 SH A | 2 x M10 | 84 |
| 48 | 525 | 91158 | 98 SH A | 2 x M12 | 145 |

To continue see next page

## Elastomer Jaw Couplings RINGFEDER® GWE Z5106.1

**Transmissible torque T [Nm]**

| Size | Ø5 | Ø6 | Ø8 | Ø9 | Ø10 | Ø12 | Ø14 | Ø15 | Ø16 | Ø18 | Ø20 | Ø22 | Ø24 | Ø25 | Ø30 | Ø35 | Ø40 | Ø44 | Ø48 | Ø50 | Ø58 |
|---|---|---|---|---|---|---|---|---|---|---|---|---|---|---|---|---|---|---|---|---|---|
| | Nm | | | | | | | | | | | | | | | | | | | | |
| 14 | 3,7 | 4,4 | 5,9 | 6,6 | 7,4 | 8,8 | 10,3 | 11,1 | 11,8 | --- | --- | --- | --- | --- | --- | --- | --- | --- | --- | --- | --- |
| 19 | --- | 12,6 | 17 | 17 | 17 | 17 | 17 | 17 | 17 | 17 | 17 | --- | --- | --- | --- | --- | --- | --- | --- | --- | --- |
| 24 | --- | --- | --- | --- | 29 | 34 | 40 | 43 | 46 | 51 | 57 | 60 | 60 | 60 | 60 | --- | --- | --- | --- | --- | --- |
| 28 | --- | --- | --- | --- | --- | 55 | 65 | 69 | 74 | 83 | 92 | 102 | 111 | 116 | 139 | 162 | --- | --- | --- | --- | --- |
| 38 | --- | --- | --- | --- | --- | 66 | 77 | 82 | 88 | 99 | 110 | 121 | 132 | 137 | 165 | 192 | 219 | 247 | --- | --- | --- |
| 42 | --- | --- | --- | --- | --- | --- | 139 | 149 | 159 | 179 | 198 | 218 | 238 | 248 | 298 | 347 | 397 | 446 | --- | --- | --- |
| 48 | --- | --- | --- | --- | --- | --- | --- | --- | 233 | 262 | 292 | 321 | 350 | 364 | 437 | 510 | 525 | 525 | 525 | 525 | 525 |

**Critical bending speed for line shafts** (operating speed = critical bending speed / 1,4)

**GWE Z5106.1**

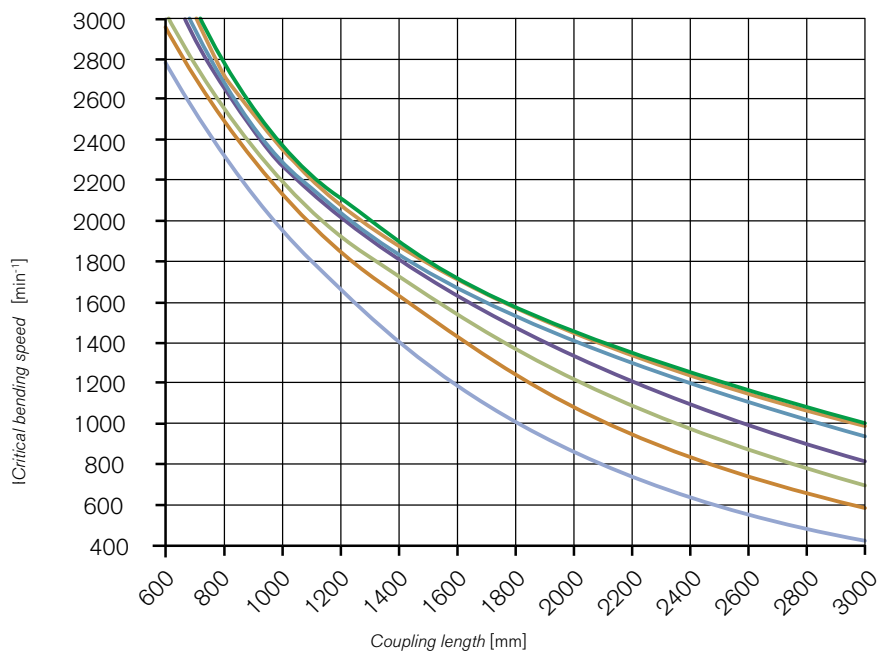


**Legend**

- *Size* 48
- *Size* 42
- *Size* 38
- *Size* 28
- *Size* 24
- *Size* 19
- *Size* 14

To continue see next page

# Elastomer Jaw Couplings RINGFEDER® GWE Z5106.1

## Explanations

| | | | | | |
|---|---|---|---|---|---|
| $d_1;d_{2min}$ | = Min. bore diameter $d_1/d_2$ | H | = Clearance diameter | T | = Transmissible torque at given $T_A$ |
| $d_1;d_{2max}$ | = Max. bore diameter $d_1/d_2$ | $H_3$ | = Length of damping module | $C_m$ | = Torsional stiffness of extension tube per meter |
| $d_{1k};d_{2kmin}$ | = Min. bore diameter $d_1/d_2$ with keyway acc. to DIN 6885-1 | l | = Distance between center screw hole and hub end | $H_{es}$ | = Hardness of the elastomeric spider |
| $d_{1k};d_{2kmax}$ | = Max. bore diameter $d_1/d_2$ with keyway acc. to DIN 6885-1 | K | = Distance shaft axis - clamping screw axis | $D_{G1}$ | = Thread |
| $C_1$ | = Guided length in hub bore | $K_1$ | = Clamping length | $T_{A1}$ | = Tightened torque of clamping screw $D_{G1}$ |
| $D_1$ | = Outer diameter | $L_{3min}$ | = Min. length of line shaft | | |
| $D_5$ | = Tube diameter | $L_{3max}$ | = Max. length of line shaft | | |

## Ordering example

| Series Size | Bore diameter $d_1$ | Bore diameter $d_2$ | Length of Line Shaft $L_3$ | Spider hardness (optional) [1] | Spider bore $d_{bz}$ (optional) [1] | Further details |
|---|---|---|---|---|---|---|
| GWE Z5106.1-14 | 8 | 10 | 1000 | 64 SH D | 8,5 | * |

[1] If a different spider hardness is selected, the detailed technical data for the sprockets must be observed. See chapter „Elastomer Jaw Couplings RINGFEDER® GWE Technical description“ in Product Paper & Tech Paper „RINGFEDER® Elastomer Jaw Couplings“

* Keyway

Further information on
**RINGFEDER® GWE Z5106.1**
on **www.ringfeder.com**

**Disclaimer of liability**
All technical details and notes are non-binding and cannot be used as a basis for legal claims. The user is obligated to determine whether the represented products meet his requirements. We reserve the right carry out modifications at any time in the interests of technical progress.

# Elastomer Jaw Couplings

# RINGFEDER® TNM E

## One-part design with 2 identical coupling hubs

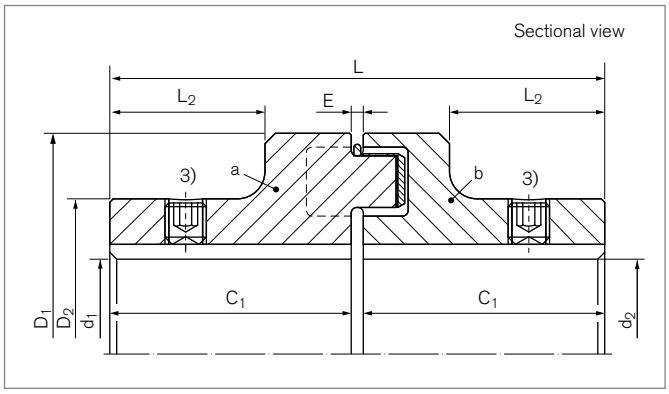


| Identifier | Size | $T_{KNPb72}$ 2) | $T_{KNPb82}$ 2) | $n_{max}$ | $d_{1kmax}$ | $d_{2kmax}$ | $D_1$ | $D_2$ |
|---|---|---|---|---|---|---|---|---|
| | | Nm | Nm | 1/min | mm | mm | mm | mm |
| WN0105 | 50 | 13 | 20 | 12500 | 19 | 19 | 50 | 33 |
| WN0106 | 67 | 22 | 35 | 10000 | 28 | 28 | 67 | 46 |
| WN0108 | 82 | 48 | 75 | 8000 | 32 | 32 | 82 | 53 |
| WN0109 | 97 | 96 | 150 | 7000 | 42 | 42 | 97 | 69 |
| WN0111 | 112 | 150 | 230 | 6000 | 48 | 48 | 112 | 79 |
| WN0112 | 128 | 250 | 380 | 5000 | 55 | 55 | 128 | 90 |
| WN0114 | 148 | 390 | 600 | 4500 | 65 | 65 | 148 | 107 |
| WN0116 | 168 | 630 | 980 | 4000 | 75 | 75 | 168 | 124 |
| WN0119 | 194 | 1050 | 1650 | 3500 | 85 | 85 | 194 | 140 |
| WN0121 | 214 | 1500 | 2400 | 3000 | 95 | 95 | 214 | 157 |
| WN0124 | 240 | 2400 | 3700 | 2750 | 110 | 110 | 240 | 179 |
| WN0126 | 265 | 3700 | 5800 | 2500 | 120 | 120 | 265 | 198 |
| WN0129 | 295 | 4900 | 7550 | 2250 | 130 | 130 | 295 | 214 |
| WN0133 | 330 | 6400 | 9900 | 2000 | 150 | 150 | 330 | 248 |
| WN0137 | 370 | 8900 | 14000 | 1750 | 170 | 170 | 370 | 278 |
| WN0141 | 415 | 13200 | 20500 | 1500 | 190 | 190 | 415 | 315 |
| WN0148 | 480 | 18000 | 28000 | 1400 | 210 | 210 | 480 | 315 |
| WN0157 | 575 | 27000 | 41000 | 1200 | 230 | 230 | 575 | 350 |

To continue see next page

## Elastomer Jaw Couplings RINGFEDER® TNM E

| Identifier | Size | $C_1$ | L | $L_2$ | E | $F_E$ | Gwa[1)] | $Gw_{ub}$ |
|---|---|---|---|---|---|---|---|---|
| | | mm | mm | mm | mm | mm | kg | kg |
| WN0105 | 50 | 25 | 52 | 13 | 2 | +/- 0,5 | 0,2 | 0,4 |
| WN0106 | 67 | 30 | 62,5 | 15 | 2,5 | +/- 0,5 | 0,5 | 1,0 |
| WN0108 | 82 | 40 | 83 | 24 | 3 | +/- 1,0 | 0,9 | 1,8 |
| WN0109 | 97 | 50 | 103 | 30 | 3 | +/- 1,0 | 1,7 | 3,4 |
| WN0111 | 112 | 60 | 123,5 | 38 | 3,5 | +/- 1,0 | 2,6 | 5,3 |
| WN0112 | 128 | 70 | 143,5 | 45 | 3,5 | +/- 1,0 | 4,1 | 8,2 |
| WN0114 | 148 | 80 | 163,5 | 52 | 3,5 | +/- 1,0 | 6,3 | 12,7 |
| WN0116 | 168 | 90 | 183,5 | 56 | 3,5 | +/- 1,5 | 9,6 | 19,3 |
| WN0119 | 194 | 100 | 203,5 | 62 | 3,5 | +/- 1,5 | 13,8 | 27,9 |
| WN0121 | 214 | 110 | 224 | 68 | 4 | +/- 2,0 | 19,1 | 38,2 |
| WN0124 | 240 | 120 | 244 | 75 | 4 | +/- 2,0 | 26,7 | 53,4 |
| WN0126 | 265 | 140 | 285,5 | 90 | 5,5 | +/- 2,5 | 37,5 | 75,0 |
| WN0129 | 295 | 150 | 308 | 98 | 8 | +/- 2,5 | 47,9 | 95,7 |
| WN0133 | 330 | 160 | 328 | 104 | 8 | +/- 2,5 | 66,5 | 132,9 |
| WN0137 | 370 | 180 | 368 | 118 | 8 | +/- 2,5 | 93,9 | 187,7 |
| WN0141 | 415 | 200 | 408 | 135 | 8 | +/- 2,5 | 129,7 | 259,3 |
| WN0148 | 480 | 220 | 448 | 150 | 8 | +/- 2,5 | 164,4 | 328,7 |
| WN0157 | 575 | 240 | 488 | 170 | 8 | +/- 2,5 | 233,5 | 467,0 |

1) Weight inclusive the half share of the intermediate ring
2) Attention on peak load – see chapter „RINGFEDER® TNM Basic information“ in Product Paper & Tech Paper „RINGFEDER® Elastomer Jaw Couplings“
3) Set screw on demand

## Explanation

$T_{KNPb72}$ = Coupling nominal torque by using the elastic element Pb72

$T_{KNPb82}$ = Coupling nominal torque by using the elastic element Pb82

$n_{max}$ = Max. rotation speed

$d_{1kmax}$ = Max. bore diameter $d_1$ with keyway acc. to DIN 6885-1

$d_{2kmax}$ = Max. bore diameter $d_2$ with keyway acc. to DIN 6885-1

$D_1$ = Outer diameter

$D_2$ = Outer diameter hub

$C_1$ = Guided length in hub bore

L = Total length

$L_2$ = Length on the hub

E = Gap width between left and right component

$F_E$ = Tolerance of the gap width E

Gwa = Weight of subassembly a

$Gw_{ub}$ = Weight, unbored

## Ordering example

| Identifier | Size | $d_{1k}$ | $d_{2k}$ | Buffer identifier (optional) 4) | Further details |
|---|---|---|---|---|---|
| **WN0157** | **575** | **200** | **220** | **Pb82** | * |

4) Details on elastomer materials see chapter „Introduction“ and „RINGFEDER® TNM Basic information“ in Product Paper & Tech Paper „RINGFEDER® Elastomer Jaw Couplings“
*) Without any other specification, we deliver as a standard: with set screws and keyway acc. to DIN 6885-1, keyway side fit P9, bore tolerance H7

Further information on
**RINGFEDER® TNM E**
on **www.ringfeder.com**

**Disclaimer of liability**
All technical details and notes are non-binding and cannot be used as a basis for legal claims. The user is obligated to determine whether the represented products meet his requirements. We reserve the right carry out modifications at any time in the interests of technical progress.

RINGFEDER POWER TRANSMISSION

# Elastomer Jaw Couplings

# RINGFEDER® TNM G

## Multi-part design, to change the intermediate ring without axial movement of the driven parts

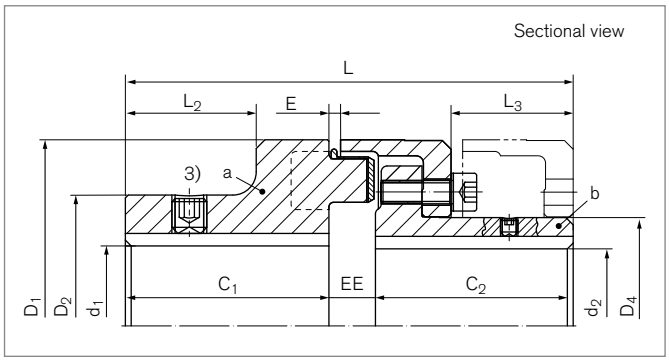


| Identifier | Size | $T_{KNPb72}$ 2) | $T_{KNPb82}$ 2) | $n_{max}$ | $d_{1kmax}$ | $d_{2kmax}$ | $D_1$ | $D_2$ | $D_4$ | $C_1$ |
|---|---|---|---|---|---|---|---|---|---|---|
| | | Nm | Nm | 1/min | mm | mm | mm | mm | mm | mm |
| WN0208 | 82 | 48 | 75 | 8000 | 32 | 32 | 82 | 53 | 44,5 | 40 |
| WN0209 | 97 | 96 | 150 | 7000 | 42 | 39 | 97 | 69 | 54,5 | 50 |
| WN0211 | 112 | 150 | 230 | 6000 | 48 | 46 | 112 | 79 | 64,5 | 60 |
| WN0212 | 128 | 250 | 380 | 5000 | 55 | 53 | 128 | 90 | 74,5 | 70 |
| WN0214 | 148 | 390 | 600 | 4500 | 65 | 65 | 148 | 107 | 92,5 | 80 |
| WN0216 | 168 | 630 | 980 | 4000 | 75 | 75 | 168 | 124 | 104,5 | 90 |
| WN0219 | 194 | 1050 | 1650 | 3500 | 85 | 85 | 194 | 140 | 121,5 | 100 |
| WN0221 | 214 | 1500 | 2400 | 3000 | 95 | 95 | 214 | 157 | 135,5 | 110 |
| WN0224 | 240 | 2400 | 3700 | 2750 | 110 | 100 | 240 | 179 | 146 | 120 |
| WN0226 | 265 | 3700 | 5800 | 2500 | 120 | 115 | 265 | 198 | 164 | 140 |
| WN0229 | 295 | 4900 | 7550 | 2250 | 130 | 130 | 295 | 214 | 181 | 150 |
| WN0233 | 330 | 6400 | 9900 | 2000 | 150 | 135 | 330 | 248 | 208 | 160 |
| WN0237 | 370 | 8900 | 14000 | 1750 | 170 | 160 | 370 | 278 | 241 | 180 |
| WN0241 | 415 | 13200 | 20500 | 1500 | 190 | 180 | 415 | 315 | 275 | 200 |
| WN0248 | 480 | 18000 | 28000 | 1400 | 210 | 200 | 480 | 315 | 289 | 220 |
| WN0257 | 575 | 27000 | 41000 | 1200 | 230 | 260 | 575 | 350 | 368 | 240 |

To continue see next page

## Elastomer Jaw Couplings RINGFEDER® TNM G

| Identifier | Size | $C_2$ | L | $L_2$ | $L_3$ | E | $F_E$ | EE | Gwa[1)] | $Gw_{ub}$ |
|---|---|---|---|---|---|---|---|---|---|---|
| | | mm | mm | mm | mm | mm | mm | mm | kg | kg |
| WN0208 | 82 | 40 | 92 | 24 | 20 | 3 | +/- 1,0 | 12 | 0,9 | 2,0 |
| WN0209 | 97 | 49 | 113 | 30 | 30,5 | 3 | +/- 1,0 | 14 | 1,7 | 3,4 |
| WN0211 | 112 | 58 | 133 | 38 | 32,5 | 3,5 | +/- 1,0 | 15 | 2,6 | 5,5 |
| WN0212 | 128 | 68 | 154 | 45 | 42 | 3,5 | +/- 1,0 | 16 | 4,1 | 8,3 |
| WN0214 | 148 | 78 | 176 | 52 | 47 | 3,5 | +/- 1,0 | 18 | 6,3 | 13,1 |
| WN0216 | 168 | 87 | 198 | 56 | 52,5 | 3,5 | +/- 1,5 | 21 | 9,6 | 19,4 |
| WN0219 | 194 | 97 | 221 | 62 | 60 | 3,5 | +/- 1,5 | 24 | 13,8 | 28,6 |
| WN0221 | 214 | 107 | 243 | 68 | 66,5 | 4 | +/- 2,0 | 26 | 19,1 | 38,8 |
| WN0224 | 240 | 117 | 267 | 75 | 75,5 | 4 | +/- 2,0 | 30 | 26,7 | 52,4 |
| WN0226 | 265 | 137 | 310 | 90 | 88 | 5,5 | +/- 2,5 | 33 | 37,5 | 75,3 |
| WN0229 | 295 | 147 | 334 | 98 | 96 | 8 | +/- 2,5 | 37 | 47,9 | 97,3 |
| WN0233 | 330 | 156 | 356 | 104 | 101,5 | 8 | +/- 2,5 | 40 | 66,5 | 130,0 |
| WN0237 | 370 | 176 | 399 | 118 | 117 | 8 | +/- 2,5 | 43 | 93,9 | 183,6 |
| WN0241 | 415 | 196 | 441 | 135 | 131 | 8 | +/- 2,5 | 45 | 129,7 | 258,2 |
| WN0248 | 480 | 220 | 485 | 150 | 149 | 8 | +/- 2,5 | 45 | 164,4 | 346,5 |
| WN0257 | 575 | 240 | 525 | 170 | 168 | 8 | +/- 2,5 | 45 | 233,5 | 528,8 |

1) Weight inclusive the half share of the intermediate ring
2) Attention on peak load – see chapter „RINGFEDER® TNM Basic information“ in Product Paper & Tech Paper „RINGFEDER® Elastomer Jaw Couplings“
3) Set screw on demand

## Explanation

$T_{KNPb72}$ = Coupling nominal torque by using the elastic element Pb72

$T_{KNPb82}$ = Coupling nominal torque by using the elastic element Pb82

$n_{max}$ = Max. rotation speed

$d_{1kmax}$ = Max. bore diameter $d_1$ with keyway acc. to DIN 6885-1

$d_{2kmax}$ = Max. bore diameter $d_2$ with keyway acc. to DIN 6885-1

$D_1$ = Outer diameter

$D_2$ = Outer diameter hub

$D_4$ = Outer diameter hub

$C_1$ = Guided length in hub bore

$C_2$ = Guided length in hub bore

L = Total length

$L_2$ = Length on the hub

$L_3$ = Length

E = Gap width between left and right component

$F_E$ = Tolerance of the gap width E

EE = Distance of the hubs

Gwa = Weight of subassembly a

$Gw_{ub}$ = Weight, unbored

## Ordering example

| Identifier | Size | $d_{1k}$ | $d_{2k}$ | Buffer identifier (optional) 4) | Further details |
|---|---|---|---|---|---|
| **WN0224** | **240** | **90** | **70** | **Pb82** | * |

4) Details on elastomer materials see chapter „Introduction“ and „RINGFEDER® TNM Basic information“ in Product Paper & Tech Paper „RINGFEDER® Elastomer Jaw Couplings“
*) Without any other specification, we deliver as a standard: with set screws and keyway acc. to DIN 6885-1, keyway side fit P9, bore tolerance H7

Further information on
**RINGFEDER® TNM G**
on **www.ringfeder.com**

**Disclaimer of liability**
All technical details and notes are non-binding and cannot be used as a basis for legal claims. The user is obligated to determine whether the represented products meet his requirements. We reserve the right carry out modifications at any time in the interests of technical progress.

RINGFEDER POWER TRANSMISSION

# Elastomer Jaw Couplings

# RINGFEDER® TNM ETW

## One part design with brake disc

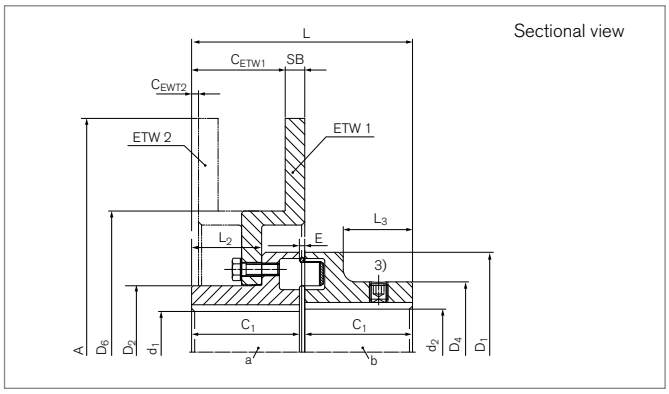


| Identifier | Size | A | SB | $T_{KNPb72}$ 2) | $T_{KNPb82}$ 2) | $T_{BR}$ 4) | $n_{max}$ | $d_{1kmax}$ | $d_{2kmax}$ | $D_1$ | $D_2$ | $D_4$ | $D_6$ | $C_1$ |
|---|---|---|---|---|---|---|---|---|---|---|---|---|---|---|
| | | mm | mm | Nm | Nm | Nm | 1/min | mm | mm | mm | mm | mm | mm | mm |
| WN0311-250 | 112 | 250 | 12,7 | 150 | 230 | 450 | 4580 | 42 | 48 | 112 | 68 | 79 | 128 | 60 |
| WN0311-300 | 112 | 300 | 12,7 | 150 | 230 | 450 | 3820 | 42 | 48 | 112 | 68 | 79 | 181 | 60 |
| WN0312-300 | 128 | 300 | 12,7 | 250 | 380 | 550 | 3820 | 52 | 55 | 128 | 85 | 90 | 181 | 70 |
| WN0314-300 | 148 | 300 | 12,7 | 390 | 600 | 1000 | 3820 | 58 | 65 | 148 | 94 | 107 | 181 | 80 |
| WN0316-356 | 168 | 356 | 12,7 | 630 | 980 | 1600 | 3225 | 72 | 75 | 168 | 118 | 124 | 210 | 90 |
| WN0316-406 | 168 | 406 | 12,7 | 630 | 980 | 1600 | 2825 | 72 | 75 | 168 | 118 | 124 | 260 | 90 |
| WN0319-406 | 194 | 406 | 12,7 | 1050 | 1650 | 2750 | 2825 | 85 | 85 | 194 | 138 | 140 | 260 | 100 |
| WN0319-457 | 194 | 457 | 12,7 | 1050 | 1650 | 2750 | 2510 | 85 | 85 | 194 | 138 | 140 | 311 | 100 |
| WN0321-406 | 214 | 406 | 12,7 | 1500 | 2400 | 3350 | 2825 | 92 | 95 | 214 | 153 | 157 | 260 | 110 |
| WN0321-514 | 214 | 514 | 12,7 | 1500 | 2400 | 3350 | 2510 | 92 | 95 | 214 | 153 | 157 | 311 | 110 |
| WN0324-457 | 240 | 457 | 12,7 | 2400 | 3700 | 4200 | 2510 | 102 | 110 | 240 | 168 | 179 | 311 | 120 |
| WN0324-514 | 240 | 514 | 12,7 | 2400 | 3700 | 4200 | 2230 | 102 | 110 | 240 | 168 | 179 | 368 | 120 |
| WN0326-457 | 265 | 457 | 12,7 | 3700 | 5800 | 8700 | 2510 | 120 | 120 | 265 | 195 | 198 | 311 | 140 |
| WN0326-514 | 265 | 514 | 12,7 | 3700 | 5800 | 8700 | 2230 | 120 | 120 | 265 | 195 | 198 | 368 | 140 |
| WN0329-514 | 295 | 514 | 12,7 | 4900 | 7550 | 9800 | 2230 | 130 | 130 | 295 | 214 | 214 | 368 | 150 |
| WN0329-610 | 295 | 610 | 12,7 | 4900 | 7550 | 9800 | 1880 | 130 | 130 | 295 | 214 | 214 | 464 | 150 |
| WN0333-514 | 330 | 514 | 12,7 | 6400 | 9900 | 10600 | 2230 | 150 | 150 | 330 | 248 | 248 | 368 | 160 |
| WN0333-610 | 330 | 610 | 12,7 | 6400 | 9900 | 10600 | 1880 | 150 | 150 | 330 | 248 | 248 | 464 | 160 |
| WN0337-610 | 370 | 610 | 12,7 | 8900 | 14000 | 13500 | 1880 | 170 | 170 | 370 | 278 | 278 | 464 | 180 |
| WN0337-711 | 370 | 711 | 12,7 | 8900 | 14000 | 13500 | 1615 | 170 | 170 | 370 | 278 | 278 | 565 | 180 |
| WN0341-610 | 415 | 610 | 12,7 | 13200 | 20500 | 16000 | 1880 | 185 | 190 | 415 | 308 | 315 | 464 | 200 |
| WN0341-711 | 415 | 711 | 12,7 | 13200 | 20500 | 16000 | 1615 | 185 | 190 | 415 | 308 | 315 | 565 | 200 |
| WN0341-812 | 415 | 812 | 12,7 | 13200 | 20500 | 16000 | 1410 | 185 | 190 | 415 | 308 | 315 | 660 | 200 |
| WN0341-915 | 415 | 915 | 12,7 | 13200 | 20500 | 16000 | 1255 | 185 | 190 | 415 | 308 | 315 | 760 | 200 |

To continue see next page

## Elastomer Jaw Couplings RINGFEDER® TNM ETW

| Identifier | Size | $C_{ETW1}$ [1] | $C_{ETW2}$ [1] | L | $L_2$ | $L_3$ | E | $F_E$ | $Gw_{BS}$ | $Gw_{ub}$ |
|---|---|---|---|---|---|---|---|---|---|---|
| | | mm | mm | mm | mm | mm | mm | mm | kg | kg |
| WN0311-250 | 112 | 55,8 | 2,5 | 123,5 | 38,5 | 38 | 3,5 | +/- 1,0 | 6,1 | 8,8 |
| WN0311-300 | 112 | 53,8 | -2,5 | 123,5 | 38,5 | 38 | 3,5 | +/- 1,0 | 9,1 | 11,7 |
| WN0312-300 | 128 | 60,8 | 4,5 | 143,5 | 45,5 | 45 | 3,5 | +/- 1,0 | 10,5 | 14,6 |
| WN0314-300 | 148 | 67,8 | 11,5 | 163,5 | 52,5 | 52 | 3,5 | +/- 1,0 | 12,1 | 18,4 |
| WN0316-356 | 168 | 81,8 | 2,5 | 183,5 | 56,5 | 56 | 3,5 | +/- 1,5 | 18,4 | 28,0 |
| WN0316-406 | 168 | 84,8 | 2,5 | 183,5 | 56,5 | 56 | 3,5 | +/- 1,5 | 21,3 | 31,0 |
| WN0319-406 | 194 | 90,8 | 8,5 | 203,5 | 62,5 | 62 | 3,5 | +/- 1,5 | 25,2 | 39,1 |
| WN0319-457 | 194 | 87,8 | 8,5 | 203,5 | 62,5 | 62 | 3,5 | +/- 1,5 | 30,1 | 44,0 |
| WN0321-406 | 214 | 96,8 | 14,5 | 224 | 68,5 | 68 | 4 | +/- 2,0 | 29,7 | 48,8 |
| WN0321-514 | 214 | 93,8 | 14,5 | 224,0 | 68,5 | 68 | 4 | +/- 2,0 | 34,5 | 53,6 |
| WN0324-457 | 240 | 100,8 | 21,5 | 244 | 75,5 | 75 | 4 | +/- 2,0 | 40,4 | 67,0 |
| WN0324-514 | 240 | 100,8 | 21,5 | 244 | 75,5 | 75 | 4 | +/- 2,0 | 45,4 | 72,0 |
| WN0326-457 | 265 | 115,8 | 36,5 | 285,5 | 90,5 | 90 | 5,5 | +/- 2,5 | 51,9 | 89,4 |
| WN0326-514 | 265 | 115,8 | 36,5 | 285,5 | 90,5 | 90 | 5,5 | +/- 2,5 | 56,7 | 94,2 |
| WN0329-514 | 295 | 123,8 | 44,5 | 308 | 98,5 | 98 | 8 | +/- 2,5 | 65,7 | 113,5 |
| WN0329-610 | 295 | 123,8 | 44,5 | 308 | 98,5 | 98 | 8 | +/- 2,5 | 76,7 | 124,5 |
| WN0333-514 | 330 | 129,8 | 50,5 | 328,0 | 104,5 | 104 | 8 | +/- 2,5 | 82,8 | 149,3 |
| WN0333-610 | 330 | 129,8 | 50,5 | 328 | 104,5 | 104 | 8 | +/- 2,5 | 93,8 | 160,3 |
| WN0337-610 | 370 | 143,8 | 64,5 | 368 | 118,5 | 118 | 8 | +/- 2,5 | 118,8 | 212,7 |
| WN0337-711 | 370 | 140,8 | 64,5 | 368 | 118,5 | 118 | 8 | +/- 2,5 | 134,1 | 227,9 |
| WN0341-610 | 415 | 160,8 | 81,5 | 408 | 135,5 | 135 | 8 | +/- 2,5 | 149,8 | 279,5 |
| WN0341-711 | 415 | 157,8 | 81,5 | 408 | 135,5 | 135 | 8 | +/- 2,5 | 164,7 | 294,3 |
| WN0341-812 | 415 | 151,8 | 81,5 | 408 | 135,5 | 135 | 8 | +/- 2,5 | 196,8 | 326,4 |
| WN0341-915 | 415 | 151,8 | 81,5 | 408 | 135,5 | 135 | 8 | +/- 2,5 | 227,2 | 356,8 |

[1] Assembly of brake disc optionally, standard combination ETW1, otherwise ETW2
[2] Attention on peak load – see chapter „RINGFEDER® TNM Basic information“ in Product Paper & Tech Paper „RINGFEDER® Elastomer Jaw Couplings“
[3] Set screw on demand
[4] Choose brake disc assembly in a way, that brake torque does not affect intermediate ring

To continue see next page

# Elastomer Jaw Couplings RINGFEDER® TNM ETW

## Explanation

**A** = Max. outer diameter
**SB** = Disc width
**$T_{KNPb72}$** = Coupling nominal torque by using the elastic element Pb72
**$T_{KNPb82}$** = Coupling nominal torque by using the elastic element Pb82
**$T_{BR}$** = Brake torque
**$n_{max}$** = Max. rotation speed
**$d_{1kmax}$** = Max. bore diameter $d_1$ with keyway acc. to DIN 6885-1
**$d_{2kmax}$** = Max. bore diameter $d_2$ with keyway acc. to DIN 6885-1
**$D_1$** = Outer diameter
**$D_2$** = Outer diameter hub
**$D_4$** = Outer diameter hub
**$D_6$** = Diameter
**$C_1$** = Guided length in hub bore
**$C_{ETW1}$** = Distance when using brake disc assembly ETW1
**$C_{ETW2}$** = Distance, when using brake disc assembly ETW2
**L** = Total length
**$L_2$** = Length on the hub
**$L_3$** = Length
**E** = Gap width between left and right component
**$F_E$** = Tolerance of the gap width E
**$Gw_{BS}$** = Weight of part with brake disc, unbored
**$Gw_{ub}$** = Weight, unbored

## Ordering example

| Identifier | Size | $d_{1k}$ | $d_{2k}$ | Buffer identifier (optional) [5] | Further details |
|---|---|---|---|---|---|
| WN0319-406 | 194 | 80 | 62 | Pb82 | * |

[5] Details on elastomer materials see chapter „Introduction“ and „RINGFEDER® TNM Basic information“ in Product Paper & Tech Paper „RINGFEDER® Elastomer Jaw Couplings“
*) Without any other specification, we deliver as a standard: with set screws and keyway acc. to DIN 6885-1, keyway side fit P9, bore tolerance H7

Further information on
**RINGFEDER® TNM ETW**
on **www.ringfeder.com**

**Disclaimer of liability**
All technical details and notes are non-binding and cannot be used as a basis for legal claims. The user is obligated to determine whether the represented products meet his requirements. We reserve the right carry out modifications at any time in the interests of technical progress.

# Elastomer Jaw Couplings

# RINGFEDER® TNM GTW

## Multi-part design, to change the intermediate ring without axial movement of the driven parts with brake disc

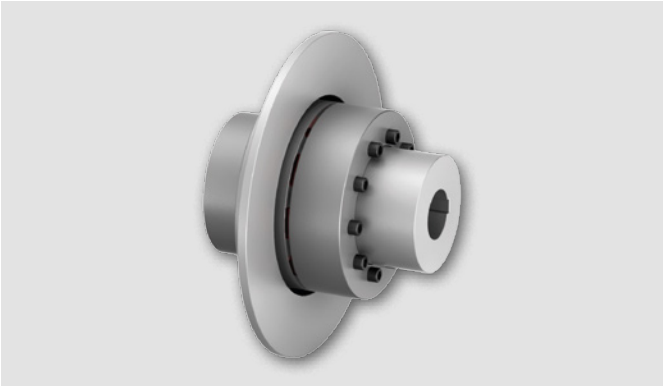

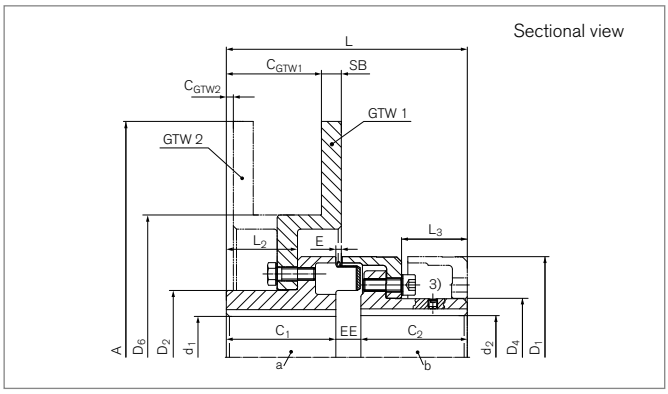


| Identifier | Size | A | SB | $T_{KNPb72}$ 2) | $T_{KNPb82}$ 2) | $T_{BR}$ 4) | $n_{max}$ | $d_{1kmax}$ | $d_{2kmax}$ | $D_1$ | $D_2$ | $D_4$ | $D_6$ | $C_1$ | $C_2$ |
|---|---|---|---|---|---|---|---|---|---|---|---|---|---|---|---|
| | | mm | mm | Nm | Nm | Nm | 1/min | mm | mm | mm | mm | mm | mm | mm | mm |
| WN0411-250 | 112 | 250 | 12,7 | 150 | 230 | 450 | 4580 | 42 | 46 | 112 | 68 | 64,5 | 128 | 60 | 58 |
| WN0411-300 | 112 | 300 | 12,7 | 150 | 230 | 450 | 3820 | 42 | 46 | 112 | 68 | 64,5 | 181 | 60 | 58 |
| WN0412-300 | 128 | 300 | 12,7 | 250 | 380 | 550 | 3820 | 52 | 53 | 128 | 85 | 74,5 | 181 | 70 | 68 |
| WN0414-300 | 148 | 300 | 12,7 | 390 | 600 | 1000 | 3820 | 58 | 65 | 148 | 94 | 92,5 | 181 | 80 | 78 |
| WN0416-356 | 168 | 356 | 12,7 | 630 | 980 | 1600 | 3225 | 72 | 75 | 168 | 118 | 104,5 | 210 | 90 | 87 |
| WN0416-406 | 168 | 406 | 12,7 | 630 | 980 | 1600 | 2825 | 72 | 75 | 168 | 118 | 104,5 | 260 | 90 | 87 |
| WN0419-406 | 194 | 406 | 12,7 | 1050 | 1650 | 2750 | 2825 | 85 | 85 | 194 | 138 | 121,5 | 260 | 100 | 97 |
| WN0419-457 | 194 | 457 | 12,7 | 1050 | 1650 | 2750 | 2510 | 85 | 85 | 194 | 138 | 121,5 | 311 | 100 | 97 |
| WN0421-406 | 214 | 406 | 12,7 | 1500 | 2400 | 3350 | 2825 | 92 | 95 | 214 | 153 | 135,5 | 260 | 110 | 107 |
| WN0421-514 | 214 | 514 | 12,7 | 1500 | 2400 | 3350 | 2510 | 92 | 95 | 214 | 153 | 135,5 | 311 | 110 | 107 |
| WN0424-457 | 240 | 457 | 12,7 | 2400 | 3700 | 4200 | 2510 | 102 | 100 | 240 | 168 | 146 | 311 | 120 | 117 |
| WN0424-514 | 240 | 514 | 12,7 | 2400 | 3700 | 4200 | 2230 | 102 | 100 | 240 | 168 | 146 | 368 | 120 | 117 |
| WN0426-457 | 265 | 457 | 12,7 | 3700 | 5800 | 8700 | 2510 | 120 | 115 | 265 | 195 | 164 | 311 | 140 | 137 |
| WN0426-514 | 265 | 514 | 12,7 | 3700 | 5800 | 8700 | 2230 | 120 | 115 | 265 | 195 | 164 | 368 | 140 | 137 |
| WN0429-514 | 295 | 514 | 12,7 | 4900 | 7550 | 9800 | 2230 | 130 | 130 | 295 | 214 | 181 | 368 | 150 | 147 |
| WN0429-610 | 295 | 610 | 12,7 | 4900 | 7550 | 9800 | 1880 | 130 | 130 | 295 | 214 | 181 | 464 | 150 | 147 |
| WN0433-514 | 330 | 514 | 12,7 | 6400 | 9900 | 10600 | 2230 | 150 | 135 | 330 | 248 | 208 | 368 | 160 | 156 |
| WN0433-610 | 330 | 610 | 12,7 | 6400 | 9900 | 10600 | 1880 | 150 | 135 | 330 | 248 | 208 | 464 | 160 | 156 |
| WN0437-610 | 370 | 610 | 12,7 | 8900 | 14000 | 13500 | 1880 | 170 | 160 | 370 | 278 | 241 | 464 | 180 | 176 |
| WN0437-711 | 370 | 711 | 12,7 | 8900 | 14000 | 13500 | 1615 | 170 | 160 | 370 | 278 | 241 | 565 | 180 | 176 |
| WN0441-610 | 415 | 610 | 12,7 | 13200 | 20500 | 16000 | 1880 | 185 | 180 | 415 | 308 | 275 | 464 | 200 | 196 |
| WN0441-711 | 415 | 711 | 12,7 | 13200 | 20500 | 16000 | 1615 | 185 | 180 | 415 | 308 | 275 | 565 | 200 | 196 |
| WN0441-812 | 415 | 812 | 12,7 | 13200 | 20500 | 16000 | 1410 | 185 | 180 | 415 | 308 | 275 | 660 | 200 | 196 |
| WN0441-915 | 415 | 915 | 12,7 | 13200 | 20500 | 16000 | 1255 | 185 | 180 | 415 | 308 | 275 | 760 | 200 | 196 |

To continue see next page

## Elastomer Jaw Couplings RINGFEDER® TNM GTW

| Identifier | Size | $C_{GTW1}$ [1] | $C_{GTW2}$ [1] | L | $L_2$ | $L_3$ | E | $F_E$ | EE | $Gw_{BS}$ | $Gw_{ub}$ |
|---|---|---|---|---|---|---|---|---|---|---|---|
| | | mm | mm | mm | mm | mm | mm | mm | mm | kg | kg |
| WN0411-250 | 112 | 55,8 | 2,5 | 133 | 38,5 | 32,5 | 3,5 | +/- 1,0 | 15 | 6,1 | 8,8 |
| WN0411-300 | 112 | 53,8 | -2,5 | 133 | 38,5 | 32,5 | 3,5 | +/- 1,0 | 15 | 9,1 | 11,7 |
| WN0412-300 | 128 | 60,8 | 4,5 | 154 | 45,5 | 42 | 3,5 | +/- 1,0 | 16 | 10,5 | 14,6 |
| WN0414-300 | 148 | 67,8 | 11,5 | 176 | 52,5 | 47 | 3,5 | +/- 1,0 | 18 | 12,1 | 18,4 |
| WN0416-356 | 168 | 81,8 | 2,5 | 198 | 56,5 | 52,5 | 3,5 | +/- 1,5 | 21 | 18,4 | 28,0 |
| WN0416-406 | 168 | 84,8 | 2,5 | 198 | 56,5 | 52,5 | 3,5 | +/- 1,5 | 21 | 21,3 | 31,0 |
| WN0419-406 | 194 | 90,8 | 8,5 | 221 | 62,5 | 60 | 3,5 | +/- 1,5 | 24 | 25,2 | 39,1 |
| WN0419-457 | 194 | 87,8 | 8,5 | 221 | 62,5 | 60 | 3,5 | +/- 1,5 | 24 | 30,1 | 44,0 |
| WN0421-406 | 214 | 96,8 | 14,5 | 243 | 68,5 | 66,5 | 4 | +/- 2,0 | 26 | 29,7 | 48,8 |
| WN0421-514 | 214 | 93,8 | 14,5 | 243 | 68,5 | 66,5 | 4 | +/- 2,0 | 26 | 34,5 | 53,6 |
| WN0424-457 | 240 | 100,8 | 21,5 | 267 | 75,5 | 75,5 | 4 | +/- 2,0 | 30 | 40,4 | 67,0 |
| WN0424-514 | 240 | 100,8 | 21,5 | 267 | 75,5 | 75,5 | 4 | +/- 2,0 | 30 | 45,4 | 72,0 |
| WN0426-457 | 265 | 115,8 | 36,5 | 310 | 90,5 | 88 | 5,5 | +/- 2,5 | 33 | 51,9 | 89,4 |
| WN0426-514 | 265 | 115,8 | 36,5 | 310 | 90,5 | 88 | 5,5 | +/- 2,5 | 33 | 56,7 | 94,2 |
| WN0429-514 | 295 | 123,8 | 44,5 | 334 | 98,5 | 96 | 8 | +/- 2,5 | 37 | 65,7 | 113,5 |
| WN0429-610 | 295 | 123,8 | 44,5 | 334 | 98,5 | 96 | 8 | +/- 2,5 | 37 | 76,7 | 124,5 |
| WN0433-514 | 330 | 129,8 | 50,5 | 356 | 104,5 | 101,5 | 8 | +/- 2,5 | 40 | 82,8 | 149,3 |
| WN0433-610 | 330 | 129,8 | 50,5 | 356 | 104,5 | 101,5 | 8 | +/- 2,5 | 40 | 93,8 | 160,3 |
| WN0437-610 | 370 | 143,8 | 64,5 | 399 | 118,5 | 117 | 8 | +/- 2,5 | 43 | 118,8 | 212,7 |
| WN0437-711 | 370 | 140,8 | 64,5 | 399 | 118,5 | 117 | 8 | +/- 2,5 | 43 | 134,1 | 227,9 |
| WN0441-610 | 415 | 160,8 | 81,5 | 441 | 135,5 | 131 | 8 | +/- 2,5 | 45 | 149,8 | 279,5 |
| WN0441-711 | 415 | 157,8 | 81,5 | 441 | 135,5 | 131 | 8 | +/- 2,5 | 45 | 164,7 | 294,3 |
| WN0441-812 | 415 | 151,8 | 81,5 | 441 | 135,5 | 131 | 8 | +/- 2,5 | 45 | 196,8 | 326,4 |
| WN0441-915 | 415 | 151,8 | 81,5 | 441 | 135,5 | 131 | 8 | +/- 2,5 | 45 | 227,2 | 356,8 |

[1] Assembly of brake disc optionally, standard combination GTW1, otherwise GTW2

To continue see next page

[2] Attention on peak load – see chapter „RINGFEDER® TNM Basic information“ in Product Paper & Tech Paper „RINGFEDER® Elastomer Jaw Couplings“

[3] Set screw on demand

[4] Choose brake disc assembly in a way, that brake torque does not affect intermediate ring

# Elastomer Jaw Couplings RINGFEDER® TNM GTW

## Explanation

**A** = Max. outer diameter
**SB** = Disc width
**$T_{KNPb72}$** = Coupling nominal torque by using the elastic element Pb72
**$T_{KNPb82}$** = Coupling nominal torque by using the elastic element Pb82
**$T_{BR}$** = Brake torque
**$n_{max}$** = Max. rotation speed
**$d_{1kmax}$** = Max. bore diameter $d_1$ with keyway acc. to DIN 6885-1
**$d_{2kmax}$** = Max. bore diameter $d_2$ with keyway acc. to DIN 6885-1
**$D_1$** = Outer diameter
**$D_2$** = Outer diameter hub
**$D_4$** = Outer diameter hub
**$D_6$** = Diameter
**$C_1$** = Guided length in hub bore
**$C_2$** = Guided length in hub bore
**$C_{GTW1}$** = Distance, when using brake disc assembly GTW1
**$C_{GTW2}$** = Distance, when using brake disc assembly GTW2
**L** = Total length
**$L_2$** = Length on the hub
**$L_3$** = Length
**E** = Gap width between left and right component
**$F_E$** = Tolerance of the gap width E
**EE** = Distance of the hubs
**$Gw_{BS}$** = Weight of part with brake disc, unbored
**$Gw_{ub}$** = Weight, unbored

## Ordering example

| Identifier | Size | $d_{1k}$ | $d_{2k}$ | Buffer identifier (optional) [5] | Further details |
|---|---|---|---|---|---|
| WN0419-406 | 194 | 80 | 62 | Pb82 | * |

[5] Details on elastomer materials see chapter „Introduction“ and „RINGFEDER® TNM Basic information“ in Product Paper & Tech Paper „RINGFEDER® Elastomer Jaw Couplings“
*) Without any other specification, we deliver as a standard: with set screws and keyway acc. to DIN 6885-1, keyway side fit P9, bore tolerance H7

Further information on
**RINGFEDER® TNM GTW**
on **www.ringfeder.com**

**Disclaimer of liability**
All technical details and notes are non-binding and cannot be used as a basis for legal claims. The user is obligated to determine whether the represented products meet his requirements. We reserve the right carry out modifications at any time in the interests of technical progress.

# Elastomer Jaw Couplings

# RINGFEDER® TNM EBT

## One part design with brake drum acc. to DIN 15431

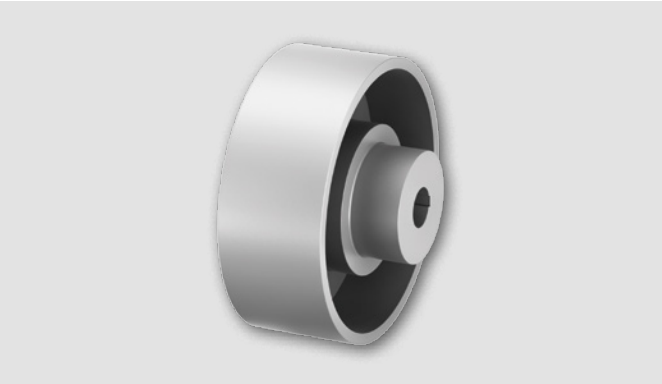

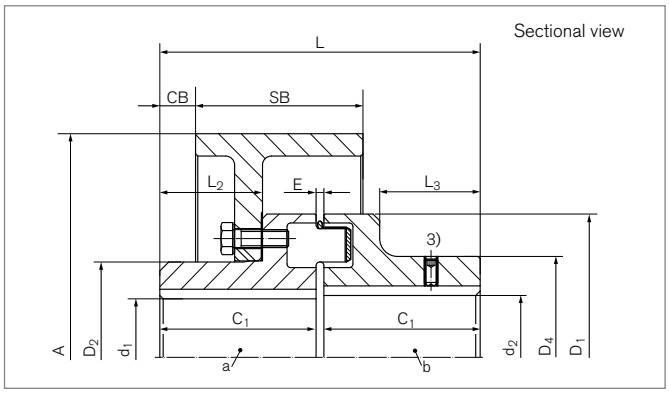


| Identifier | Size | A | SB | $T_{KNPb72}$ 2) | $T_{KNPb82}$ 2) | $T_{BR}$ 4) | $n_{max}$ | $d_{1kmax}$ | $d_{2kmax}$ | $D_1$ | $D_2$ | $D_4$ | $C_1$ |
|---|---|---|---|---|---|---|---|---|---|---|---|---|---|
| | | mm | mm | Nm | Nm | Nm | 1/min | mm | mm | mm | mm | mm | mm |
| WN0511-200 | 112 | 200 | 75 | 150 | 230 | 450 | 4200 | 42 | 48 | 112 | 68 | 79 | 60 |
| WN0512-200 | 128 | 200 | 75 | 250 | 380 | 550 | 4200 | 52 | 55 | 128 | 85 | 90 | 70 |
| WN0514-250 | 148 | 250 | 95 | 390 | 600 | 1000 | 3400 | 58 | 65 | 148 | 94 | 107 | 80 |
| WN0516-250 | 168 | 250 | 95 | 630 | 980 | 1600 | 3400 | 72 | 75 | 168 | 118 | 124 | 90 |
| WN0516-315 | 168 | 315 | 118 | 630 | 980 | 1600 | 2700 | 72 | 75 | 168 | 118 | 124 | 90 |
| WN0519-315 | 194 | 315 | 118 | 1050 | 1650 | 2750 | 2700 | 85 | 85 | 194 | 138 | 140 | 100 |
| WN0521-315 | 214 | 315 | 118 | 1500 | 2400 | 3350 | 2700 | 92 | 95 | 214 | 153 | 157 | 110 |
| WN0521-400 | 214 | 400 | 150 | 1500 | 2400 | 3350 | 2100 | 90 | 95 | 214 | 153 | 157 | 110 |
| WN0524-400 | 240 | 400 | 150 | 2400 | 3700 | 4200 | 2100 | 102 | 110 | 240 | 168 | 179 | 120 |
| WN0524-500 | 240 | 500 | 190 | 2400 | 3700 | 4200 | 1700 | 102 | 110 | 240 | 168 | 179 | 120 |
| WN0526-500 | 265 | 500 | 190 | 3700 | 5800 | 8700 | 1700 | 120 | 120 | 265 | 198 | 198 | 140 |
| WN0529-500 | 295 | 500 | 190 | 4900 | 7550 | 9800 | 1700 | 130 | 130 | 295 | 214 | 214 | 150 |
| WN0529-630 | 295 | 630 | 236 | 4900 | 7550 | 9800 | 1360 | 130 | 130 | 295 | 214 | 214 | 150 |
| WN0533-630 | 330 | 630 | 236 | 6400 | 9900 | 10600 | 1360 | 150 | 150 | 330 | 248 | 248 | 160 |
| WN0533-710 | 330 | 710 | 265 | 6400 | 9900 | 10600 | 1200 | 150 | 150 | 330 | 248 | 248 | 160 |
| WN0537-710 | 370 | 710 | 265 | 8900 | 14000 | 13500 | 1200 | 170 | 170 | 370 | 278 | 278 | 180 |
| WN0541-710 | 415 | 710 | 265 | 13200 | 20500 | 16000 | 1200 | 185 | 190 | 415 | 308 | 315 | 200 |

To continue see next page

## Elastomer Jaw Couplings RINGFEDER® TNM EBT

| Identifier | Size | $C_B$ | L | $L_2$ | $L_3$ | E | $F_E$ | $Gw_{BS}$ [1] | $Gw_{ub}$ |
|---|---|---|---|---|---|---|---|---|---|
| | | mm | mm | mm | mm | mm | mm | kg | kg |
| WN0511-200 | 112 | 11 | 123,5 | 38,5 | 38 | 3,5 | +/- 1,0 | 7,3 | 9,9 |
| WN0512-200 | 128 | 16 | 143,5 | 45,5 | 45 | 3,5 | +/- 1,0 | 8,9 | 13,0 |
| WN0514-250 | 148 | 16 | 163,5 | 52,5 | 52 | 3,5 | +/- 1,0 | 14,8 | 21,1 |
| WN0516-250 | 168 | 19 | 183,5 | 56,5 | 56 | 3,5 | +/- 1,5 | 18,1 | 27,7 |
| WN0516-315 | 168 | 8 | 183,5 | 56,5 | 56 | 3,5 | +/- 1,5 | 27,2 | 36,9 |
| WN0519-315 | 194 | 16,5 | 203,5 | 62,5 | 62 | 3,5 | +/- 1,5 | 30,8 | 44,7 |
| WN0521-315 | 214 | 19 | 224 | 68,5 | 68 | 4 | +/- 2,0 | 36,0 | 55,0 |
| WN0521-400 | 214 | 12,5 | 224 | 68,5 | 68 | 4 | +/- 2,0 | 51,7 | 70,8 |
| WN0524-400 | 240 | 18 | 244 | 75,5 | 75 | 4 | +/- 2,0 | 57,7 | 84,4 |
| WN0524-500 | 240 | 9 | 244 | 75,5 | 75 | 4 | +/- 2,0 | 84,5 | 111,4 |
| WN0526-500 | 265 | 22 | 285,5 | 90,5 | 90 | 5,5 | +/- 2,5 | 96,6 | 134,1 |
| WN0529-500 | 295 | 30 | 308 | 98,5 | 98 | 8 | +/- 2,5 | 106,0 | 153,9 |
| WN0529-630 | 295 | 5 | 308 | 98,5 | 98 | 8 | +/- 2,5 | 159,7 | 207,5 |
| WN0533-630 | 330 | 11 | 328 | 104,5 | 104 | 8 | +/- 2,5 | 176,7 | 243,1 |
| WN0533-710 | 330 | 0 | 328 | 104,5 | 104 | 8 | +/- 2,5 | 214,9 | 281,3 |
| WN0537-710 | 370 | 15 | 368 | 118,5 | 118 | 8 | +/- 2,5 | 242,3 | 366,2 |
| WN0541-710 | 415 | 25 | 408 | 135,5 | 135 | 8 | +/- 2,5 | 285,8 | 415,4 |

1) Weight inclusive the half share of the intermediate ring
2) Attention on peak load – see chapter „RINGFEDER® TNM Basic information“ in Product Paper & Tech Paper „RINGFEDER® Elastomer Jaw Couplings“
3) Set screw on demand
4) Choose brake drum assembly in a way, that brake torque does not affect intermediate ring

## Explanation

**A** = Max. outer diameter
**SB** = Disc width
**$T_{KNPb72}$** = Coupling nominal torque by using the elastic element Pb72
**$T_{KNPb82}$** = Coupling nominal torque by using the elastic element Pb82
**$T_{BR}$** = Brake torque
**$n_{max}$** = Max. rotation speed

**$d_{1kmax}$** = Max. bore diameter $d_1$ with keyway acc. to DIN 6885-1
**$d_{2kmax}$** = Max. bore diameter $d_2$ with keyway acc. to DIN 6885-1
**$D_1$** = Outer diameter
**$D_2$** = Outer diameter hub
**$D_4$** = Outer diameter hub
**$C_1$** = Guided length in hub bore
**$C_B$** = Brake disc distance

**L** = Total length
**$L_2$** = Length on the hub
**$L_3$** = Length
**E** = Gap width between left and right component
**$F_E$** = Tolerance of the gap width E
**$Gw_{BS}$** = Weight of part with brake disc, unbored
**$Gw_{ub}$** = Weight, unbored

## Ordering example

| Identifier | Size | $d_{1k}$ | $d_{2k}$ | Buffer identifier (optional) [5] | Further details |
|---|---|---|---|---|---|
| **WN0519-315** | **194** | **80** | **62** | **Pb82** | * |

5) Details on elastomer materials see chapter „Introduction“ and „RINGFEDER® TNM Basic information“ in Product Paper & Tech Paper „RINGFEDER® Elastomer Jaw Couplings“
*) Without any other specification, we deliver as a standard: with set screws and keyway acc. to DIN 6885-1, keyway side fit P9, bore tolerance H7

Further information on
**RINGFEDER® TNM EBT**
on **www.ringfeder.com**

**Disclaimer of liability**
All technical details and notes are non-binding and cannot be used as a basis for legal claims. The user is obligated to determine whether the represented products meet his requirements. We reserve the right carry out modifications at any time in the interests of technical progress.

# Elastomer Jaw Couplings

# RINGFEDER® TNM GBT

## Multi-part design, to change the intermediate ring without axial movement of the driven parts with brake drum acc. to DIN 15431

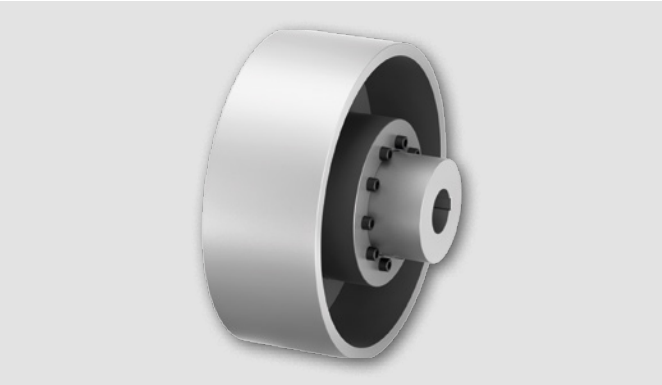

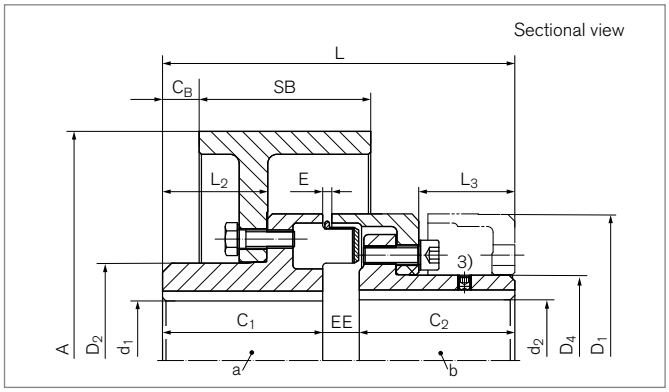


| Identifier | Size | A | SB | $T_{KNPb72}$ 2) | $T_{KNPb82}$ 2) | $T_{BR}$ 4) | $n_{max}$ | $d_{1kmax}$ | $d_{2kmax}$ | $D_1$ | $D_2$ | $D_4$ | $C_1$ | $C_2$ |
|---|---|---|---|---|---|---|---|---|---|---|---|---|---|---|
| | | mm | mm | Nm | Nm | Nm | 1/min | mm | mm | mm | mm | mm | mm | mm |
| WN0611-200 | 112 | 200 | 75 | 150 | 230 | 450 | 4200 | 42 | 46 | 112 | 68 | 64,5 | 60 | 58 |
| WN0612-200 | 128 | 200 | 75 | 250 | 380 | 550 | 4200 | 52 | 53 | 128 | 85 | 74,5 | 70 | 68 |
| WN0614-250 | 148 | 250 | 95 | 390 | 600 | 1000 | 3400 | 58 | 65 | 148 | 94 | 92,5 | 80 | 78 |
| WN0616-250 | 168 | 250 | 95 | 630 | 980 | 1600 | 3400 | 72 | 75 | 168 | 118 | 104,5 | 90 | 87 |
| WN0616-315 | 168 | 315 | 118 | 630 | 980 | 1600 | 2700 | 72 | 75 | 168 | 118 | 104,5 | 90 | 87 |
| WN0619-315 | 194 | 315 | 118 | 1050 | 1650 | 2750 | 2700 | 85 | 85 | 194 | 138 | 121,5 | 100 | 97 |
| WN0621-315 | 214 | 315 | 118 | 1500 | 2400 | 3350 | 2700 | 92 | 95 | 214 | 153 | 135,5 | 110 | 107 |
| WN0621-400 | 214 | 400 | 150 | 1500 | 2400 | 3350 | 2100 | 92 | 95 | 214 | 153 | 135,5 | 110 | 107 |
| WN0624-400 | 240 | 400 | 150 | 2400 | 3700 | 4200 | 2100 | 102 | 100 | 240 | 168 | 146 | 120 | 117 |
| WN0624-500 | 240 | 500 | 190 | 2400 | 3700 | 4200 | 1700 | 102 | 100 | 240 | 168 | 146 | 120 | 117 |
| WN0626-500 | 265 | 500 | 190 | 3700 | 5800 | 8700 | 1700 | 120 | 115 | 265 | 198 | 164 | 140 | 137 |
| WN0629-500 | 295 | 500 | 190 | 4900 | 7550 | 9800 | 1700 | 130 | 130 | 295 | 214 | 181 | 150 | 147 |
| WN0629-630 | 295 | 630 | 236 | 4900 | 7550 | 9800 | 1360 | 130 | 130 | 295 | 214 | 181 | 150 | 147 |
| WN0633-630 | 330 | 630 | 236 | 6400 | 9900 | 10600 | 1360 | 150 | 135 | 330 | 248 | 208 | 160 | 156 |
| WN0633-710 | 330 | 710 | 265 | 6400 | 9900 | 10600 | 1200 | 150 | 135 | 330 | 248 | 208 | 160 | 156 |
| WN0637-710 | 370 | 710 | 265 | 8900 | 14000 | 13500 | 1200 | 170 | 160 | 370 | 278 | 241 | 180 | 176 |
| WN0641-710 | 415 | 710 | 265 | 13200 | 20500 | 16000 | 1200 | 185 | 180 | 415 | 308 | 275 | 200 | 196 |

To continue see next page

## Elastomer Jaw Couplings RINGFEDER® TNM GBT

| Identifier | Size | $C_B$ | L | $L_2$ | $L_3$ | E | $F_E$ | EE | $Gw_{BS}$ [1] | $Gw_{ub}$ |
|---|---|---|---|---|---|---|---|---|---|---|
| | | mm | mm | mm | mm | mm | mm | mm | kg | kg |
| WN0611-200 | 112 | 11 | 133 | 38,5 | 32,5 | 3,5 | +/- 1,0 | 15 | 7,3 | 10,2 |
| WN0612-200 | 128 | 16 | 154 | 45,5 | 42 | 3,5 | +/- 1,0 | 16 | 8,9 | 13,0 |
| WN0614-250 | 148 | 16 | 176 | 52,5 | 47 | 3,5 | +/- 1,0 | 18 | 14,8 | 21,5 |
| WN0616-250 | 168 | 19 | 198 | 56,5 | 52,5 | 3,5 | +/- 1,5 | 21 | 18,1 | 17,8 |
| WN0616-315 | 168 | 8 | 198 | 56,5 | 52,5 | 3,5 | +/- 1,5 | 21 | 27,2 | 37,0 |
| WN0619-315 | 194 | 16,5 | 221 | 62,5 | 60 | 3,5 | +/- 1,5 | 24 | 30,8 | 45,4 |
| WN0621-315 | 214 | 19 | 243 | 68,5 | 66,5 | 4 | +/- 2,0 | 26 | 36,0 | 55,6 |
| WN0621-400 | 214 | 12,5 | 243 | 68,5 | 66,5 | 4 | +/- 2,0 | 26 | 51,7 | 71,4 |
| WN0624-400 | 240 | 18 | 267 | 75,5 | 75,5 | 4 | +/- 2,0 | 30 | 57,7 | 83,5 |
| WN0624-500 | 240 | 9 | 267 | 75,5 | 75,5 | 4 | +/- 2,0 | 30 | 84,5 | 110,5 |
| WN0626-500 | 265 | 22 | 310 | 90,5 | 89 | 5,5 | +/- 2,5 | 33 | 96,6 | 134,4 |
| WN0629-500 | 295 | 30 | 334 | 98,5 | 96 | 8 | +/- 2,5 | 37 | 106,0 | 155,5 |
| WN0629-630 | 295 | 5 | 334 | 98,5 | 96 | 8 | +/- 2,5 | 37 | 159,7 | 209,1 |
| WN0633-630 | 330 | 11 | 356 | 104,5 | 101,5 | 8 | +/- 2,5 | 40 | 176,7 | 240,2 |
| WN0633-710 | 330 | 0 | 356 | 104,5 | 101,5 | 8 | +/- 2,5 | 40 | 214,9 | 278,3 |
| WN0637-710 | 370 | 15 | 399 | 118,5 | 117 | 8 | +/- 2,5 | 43 | 242,3 | 332,0 |
| WN0641-710 | 415 | 25 | 441 | 135,5 | 131 | 8 | +/- 2,5 | 45 | 285,8 | 414,3 |

1) Weight inclusive the half share of the intermediate ring
2) Attention on peak load – see chapter „RINGFEDER® TNM Basic information“ in Product Paper & Tech Paper „RINGFEDER® Elastomer Jaw Couplings“
3) Set screw on demand
4) Choose brake drum assembly in a way, that brake torque does not affect intermediate ring

## Explanation

**A** = Max. outer diameter
**SB** = Disc width
**$T_{KNPb72}$** = Coupling nominal torque by using the elastic element Pb72
**$T_{KNPb82}$** = Coupling nominal torque by using the elastic element Pb82
**$T_{BR}$** = Brake torque
**$n_{max}$** = Max. rotation speed
**$d_{1kmax}$** = Max. bore diameter $d_1$ with keyway acc. to DIN 6885-1
**$d_{2kmax}$** = Max. bore diameter $d_2$ with keyway acc. to DIN 6885-1
**$D_1$** = Outer diameter
**$D_2$** = Outer diameter hub
**$D_4$** = Outer diameter hub
**$C_1$** = Guided length in hub bore
**$C_2$** = Guided length in hub bore
**$C_B$** = Brake disc distance
**L** = Total length
**$L_2$** = Length on the hub
**$L_3$** = Length
**E** = Gap width between left and right component
**$F_E$** = Tolerance of the gap width E
**EE** = Distance of the hubs
**$Gw_{BS}$** = Weight of part with brake disc, unbored
**$Gw_{ub}$** = Weight, unbored

## Ordering example

| Identifier | Size | $d_{1k}$ | $d_{2k}$ | Buffer identifier (optional) [5] | Further details |
|---|---|---|---|---|---|
| **WN0619-315** | **194** | **80** | **62** | **Pb82** | * |

5) Details on elastomer materials see chapter „Introduction“ and „RINGFEDER® TNM Basic information“ in Product Paper & Tech Paper „RINGFEDER® Elastomer Jaw Couplings“
*) Without any other specification, we deliver as a standard: with set screws and keyway acc. to DIN 6885-1, keyway side fit P9, bore tolerance H7

Further information on
**RINGFEDER® TNM GBT**
on **www.ringfeder.com**

**Disclaimer of liability**
All technical details and notes are non-binding and cannot be used as a basis for legal claims. The user is obligated to determine whether the represented products meet his requirements. We reserve the right carry out modifications at any time in the interests of technical progress.

# Elastomer Jaw Couplings

# RINGFEDER® TNM H

## Multi-part design, to remove the intermediate spacer. Disassembly of the pump impeller without axial movement of the driven parts

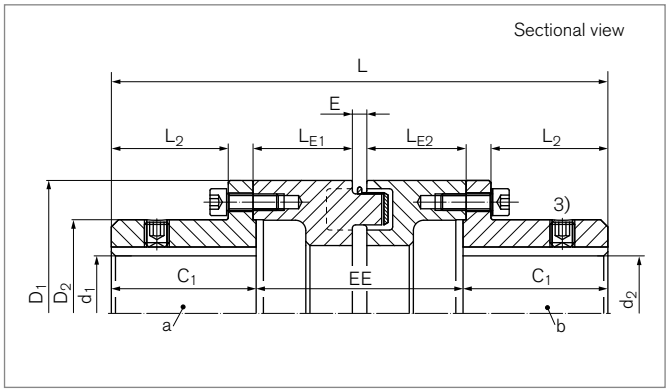


| Identifier | Size | $T_{KNPb72}$ 2) | $T_{KNPb82}$ 2) | $n_{max}$ | $d_{1kmax}$ | $d_{2kmax}$ | $D_1$ | $D_2$ | $C_1$ |
|---|---|---|---|---|---|---|---|---|---|
| | | Nm | Nm | 1/min | mm | mm | mm | mm | mm |
| WN0706-100 | 67 | 22 | 35 | 10000 | 30 | 30 | 67 | 45 | 30 |
| WN0706-120 | 67 | 22 | 35 | 10000 | 30 | 30 | 67 | 45 | 30 |
| WN0706-140 | 67 | 22 | 35 | 10000 | 30 | 30 | 67 | 45 | 30 |
| WN0708-100 | 82 | 48 | 75 | 8000 | 35 | 35 | 82 | 53 | 40 |
| WN0708-120 | 82 | 48 | 75 | 8000 | 35 | 35 | 82 | 53 | 40 |
| WN0708-140 | 82 | 48 | 75 | 8000 | 35 | 35 | 82 | 53 | 40 |
| WN0709-100 | 97 | 96 | 150 | 7000 | 45 | 45 | 97 | 66 | 50 |
| WN0709-120 | 97 | 96 | 150 | 7000 | 45 | 45 | 97 | 66 | 50 |
| WN0709-140 | 97 | 96 | 150 | 7000 | 45 | 45 | 97 | 66 | 50 |
| WN0711-100 | 112 | 150 | 230 | 6000 | 50 | 50 | 112 | 79 | 60 |
| WN0711-120 | 112 | 150 | 230 | 6000 | 50 | 50 | 112 | 79 | 60 |
| WN0711-140 | 112 | 150 | 230 | 6000 | 50 | 50 | 112 | 79 | 60 |
| WN0712-100 | 128 | 250 | 380 | 5000 | 60 | 60 | 128 | 90 | 70 |
| WN0712-120 | 128 | 250 | 380 | 5000 | 60 | 60 | 128 | 90 | 70 |
| WN0712-140 | 128 | 250 | 380 | 5000 | 60 | 60 | 128 | 90 | 70 |
| WN0712-180 | 128 | 250 | 380 | 5000 | 60 | 60 | 128 | 90 | 70 |
| WN0714-100 | 148 | 390 | 600 | 4500 | 65 | 65 | 148 | 107 | 80 |
| WN0714-140 | 148 | 390 | 600 | 4500 | 65 | 65 | 148 | 107 | 80 |
| WN0714-180 | 148 | 390 | 600 | 4500 | 65 | 65 | 148 | 107 | 80 |
| WN0716-100 | 168 | 630 | 980 | 4000 | 75 | 75 | 168 | 124 | 90 |
| WN0716-140 | 168 | 630 | 980 | 4000 | 75 | 75 | 168 | 124 | 90 |
| WN0716-180 | 168 | 630 | 980 | 4000 | 75 | 75 | 168 | 124 | 90 |
| WN0719-100 | 194 | 1050 | 1650 | 3500 | 85 | 85 | 194 | 140 | 100 |
| WN0719-140 | 194 | 1050 | 1650 | 3500 | 85 | 85 | 194 | 140 | 100 |
| WN0719-180 | 194 | 1050 | 1650 | 3500 | 85 | 85 | 194 | 140 | 100 |
| WN0719-250 | 194 | 1050 | 1650 | 3500 | 85 | 85 | 194 | 140 | 100 |
| WN0721-100 | 214 | 1500 | 2400 | 3000 | 95 | 95 | 214 | 157 | 110 |

To continue see next page

## Elastomer Jaw Couplings RINGFEDER® TNM H

| Identifier | Size | $T_{KNPb72}$ 2) | $T_{KNPb82}$ 2) | $n_{max}$ | $d_{1kmax}$ | $d_{2kmax}$ | $D_1$ | $D_2$ | $C_1$ |
|---|---|---|---|---|---|---|---|---|---|
| | | Nm | Nm | 1/min | mm | mm | mm | mm | mm |
| WN0721-140 | 214 | 1500 | 2400 | 3000 | 95 | 95 | 214 | 157 | 110 |
| WN0721-180 | 214 | 1500 | 2400 | 3000 | 95 | 95 | 214 | 157 | 110 |
| WN0721-250 | 214 | 1500 | 2400 | 3000 | 95 | 95 | 214 | 157 | 110 |
| WN0724-100 | 240 | 2400 | 3700 | 2750 | 110 | 110 | 240 | 179 | 120 |
| WN0724-140 | 240 | 2400 | 3700 | 2750 | 110 | 110 | 240 | 179 | 120 |
| WN0724-180 | 240 | 2400 | 3700 | 2750 | 110 | 110 | 240 | 179 | 120 |
| WN0724-250 | 240 | 2400 | 3700 | 2750 | 110 | 110 | 240 | 179 | 120 |
| WN0726-100 | 265 | 3700 | 5800 | 2500 | 120 | 120 | 265 | 198 | 140 |
| WN0726-140 | 265 | 3700 | 5800 | 2500 | 120 | 120 | 265 | 198 | 140 |
| WN0726-180 | 265 | 3700 | 5800 | 2500 | 120 | 120 | 265 | 198 | 140 |
| WN0726-250 | 265 | 3700 | 5800 | 2500 | 120 | 120 | 265 | 198 | 140 |
| WN0729-140 | 295 | 4900 | 7550 | 2250 | 130 | 130 | 295 | 214 | 150 |
| WN0729-180 | 295 | 4900 | 7550 | 2250 | 130 | 130 | 295 | 214 | 150 |
| WN0729-250 | 295 | 4900 | 7550 | 2250 | 130 | 130 | 295 | 214 | 150 |
| WN0733-140 | 330 | 6400 | 9900 | 2000 | 150 | 150 | 330 | 248 | 160 |
| WN0733-180 | 330 | 6400 | 9900 | 2000 | 150 | 150 | 330 | 248 | 160 |
| WN0733-250 | 330 | 6400 | 9900 | 2000 | 150 | 150 | 330 | 248 | 160 |

| Identifier | Size | L | $L_2$ | $L_{E1}$ | $L_{E2}$ | E | $F_E$ | EE | $Gw_{ZW}$ | $Gw_{ub}$ |
|---|---|---|---|---|---|---|---|---|---|---|
| | | mm | mm | mm | mm | mm | mm | mm | kg | kg |
| WN0706-100 | 67 | 160 | 20 | 48,5 | 48,5 | 5 | +/- 0,5 | 100 | 1,4 | 2,5 |
| WN0706-120 | 67 | 180 | 20 | 48,5 | 68,5 | 5 | +/- 0,5 | 120 | 1,7 | 2,8 |
| WN0706-140 | 67 | 200 | 20 | 68,5 | 68,5 | 5 | +/- 0,5 | 140 | 2,0 | 3,1 |
| WN0708-100 | 82 | 180 | 28 | 48,5 | 48,5 | 5 | +/- 1,0 | 100 | 2,0 | 4,0 |
| WN0708-120 | 82 | 200 | 28 | 48,5 | 68,5 | 5 | +/- 1,0 | 120 | 2,4 | 4,0 |
| WN0708-140 | 82 | 220 | 28 | 68,5 | 68,5 | 5 | +/- 1,0 | 140 | 2,8 | 4,9 |
| WN0709-100 | 97 | 200 | 37 | 48,5 | 48,5 | 5 | +/- 1,0 | 100 | 2,8 | 6,4 |
| WN0709-120 | 97 | 220 | 37 | 48,5 | 68,5 | 5 | +/- 1,0 | 120 | 3,5 | 7,0 |
| WN0709-140 | 97 | 240 | 37 | 68,5 | 68,5 | 5 | +/- 1,0 | 140 | 4,1 | 7,7 |
| WN0711-100 | 112 | 220 | 46,5 | 48 | 48 | 7 | +/- 1,0 | 100 | 3,8 | 9,5 |
| WN0711-120 | 112 | 240 | 46,5 | 48 | 68 | 7 | +/- 1,0 | 120 | 4,6 | 10,3 |
| WN0711-140 | 112 | 260 | 46,5 | 68 | 68 | 7 | +/- 1,0 | 140 | 5,4 | 11,1 |
| WN0712-100 | 128 | 240 | 56,5 | 48 | 48 | 7 | +/- 1,0 | 100 | 4,8 | 13,2 |
| WN0712-120 | 128 | 260 | 56,5 | 48 | 68 | 7 | +/- 1,0 | 120 | 5,8 | 14,2 |
| WN0712-140 | 128 | 280 | 56,5 | 68 | 68 | 7 | +/- 1,0 | 140 | 6,7 | 15,1 |
| WN0712-180 | 128 | 320 | 56,5 | 88 | 88 | 7 | +/- 1,0 | 180 | 8,6 | 17,0 |
| WN0714-100 | 148 | 260 | 64,5 | 48 | 48 | 7 | +/- 1,0 | 100 | 6,0 | 18,4 |
| WN0714-140 | 148 | 300 | 64,5 | 48 | 88 | 7 | +/- 1,0 | 140 | 8,4 | 20,8 |
| WN0714-180 | 148 | 340 | 64,5 | 88 | 88 | 7 | +/- 1,0 | 180 | 10,8 | 23,3 |
| WN0716-100 | 168 | 280 | 73,5 | 48 | 48 | 7 | +/- 1,5 | 100 | 7,6 | 26,0 |
| WN0716-140 | 168 | 320 | 73,5 | 48 | 88 | 7 | +/- 1,5 | 140 | 10,5 | 28,9 |
| WN0716-180 | 168 | 360 | 73,5 | 88 | 88 | 7 | +/- 1,5 | 180 | 13,3 | 31,8 |
| WN0719-100 | 194 | 300 | 82,5 | 48 | 48 | 7 | +/- 1,5 | 100 | 9,4 | 35,7 |
| WN0719-140 | 194 | 340 | 82,5 | 48 | 88 | 7 | +/- 1,5 | 140 | 12,9 | 39,1 |
| WN0719-180 | 194 | 380 | 82,5 | 88 | 88 | 7 | +/- 1,5 | 180 | 16,3 | 42,6 |
| WN0719-250 | 194 | 450 | 82,5 | 123 | 123 | 7 | +/- 1,5 | 250 | 22,4 | 48,7 |
| WN0721-100 | 214 | 320 | 90,5 | 48 | 48 | 7 | +/- 1,5 | 100 | 11,5 | 47,6 |
| WN0721-140 | 214 | 360 | 90,5 | 48 | 88 | 7 | +/- 1,5 | 140 | 15,7 | 51,8 |
| WN0721-180 | 214 | 400 | 90,5 | 88 | 88 | 7 | +/- 1,5 | 180 | 19,9 | 56,0 |
| WN0721-250 | 214 | 470 | 90,5 | 123 | 123 | 7 | +/- 1,5 | 250 | 27,2 | 63,3 |

To continue see next page

## Elastomer Jaw Couplings RINGFEDER® TNM H

| Identifier | Size | L | $L_2$ | $L_{E1}$ | $L_{E2}$ | E | $F_E$ | EE | $Gw_{ZW}$ | $Gw_{ub}$ |
|---|---|---|---|---|---|---|---|---|---|---|
| | | mm | mm | mm | mm | mm | mm | mm | kg | kg |
| WN0724-100 | 240 | 340 | 98 | 48 | 48 | 8 | +/- 1,5 | 100 | 15,8 | 66,5 |
| WN0724-140 | 240 | 380 | 98 | 48 | 88 | 8 | +/- 1,5 | 140 | 19,9 | 70,6 |
| WN0724-180 | 240 | 420 | 98 | 88 | 88 | 8 | +/- 1,5 | 180 | 24,0 | 74,7 |
| WN0724-250 | 240 | 490 | 98 | 123 | 123 | 8 | +/- 1,5 | 250 | 31,8 | 82,5 |
| WN0726-100 | 265 | 380 | 117 | 48 | 48 | 8 | +/- 1,5 | 100 | 19,6 | 91,1 |
| WN0726-140 | 265 | 420 | 117 | 48 | 88 | 8 | +/- 1,5 | 140 | 23,6 | 95,1 |
| WN0726-180 | 265 | 460 | 117 | 88 | 88 | 8 | +/- 1,5 | 180 | 27,6 | 99,1 |
| WN0726-250 | 265 | 530 | 117 | 123 | 123 | 8 | +/- 1,5 | 250 | 38,0 | 109,5 |
| WN0729-140 | 295 | 440 | 122 | 67 | 67 | 10 | +/- 2,5 | 140 | 31,2 | 123,5 |
| WN0729-180 | 295 | 480 | 122 | 87 | 87 | 10 | +/- 2,5 | 180 | 37,9 | 130,2 |
| WN0729-250 | 295 | 550 | 122 | 122 | 122 | 10 | +/- 2,5 | 250 | 47,9 | 140,2 |
| WN0733-140 | 330 | 460 | 128 | 67 | 67 | 10 | +/- 2,5 | 140 | 40,9 | 171,7 |
| WN0733-180 | 330 | 500 | 128 | 87 | 87 | 10 | +/- 2,5 | 180 | 49,7 | 180,5 |
| WN0733-250 | 330 | 570 | 128 | 122 | 122 | 10 | +/- 2,5 | 250 | 64,5 | 195,3 |

1) Mass information for unbored coupling parts
2) Attention on peak load – see chapter „RINGFEDER® TNM Basic information“ in Product Paper & Tech Paper „RINGFEDER® Elastomer Jaw Couplings“
3) Set screw on demand

## Explanation

**$T_{KNPb72}$** = Coupling nominal torque by using the elastic element Pb72

**$T_{KNPb82}$** = Coupling nominal torque by using the elastic element Pb82

**$n_{max}$** = Max. rotation speed

**$d_{1kmax}$** = Max. bore diameter $d_1$ with keyway acc. to DIN 6885-1

**$d_{2kmax}$** = Max. bore diameter $d_2$ with keyway acc. to DIN 6885-1

**$D_1$** = Outer diameter

**$D_2$** = Outer diameter hub

**$C_1$** = Guided length in hub bore

**L** = Total length

**$L_2$** = Length on the hub

**$L_{E1}$** = Spacer Length

**$L_{E2}$** = Spacer Length

**E** = Gap width between left and right component

**$F_E$** = Tolerance of the gap width E

**EE** = Distance of the hubs

**$Gw_{ZW}$** = Spacer weight

**$Gw_{ub}$** = Weight, unbored

## Ordering example

| Identifier | Size | $d_{1k}$ | $d_{2k}$ | Buffer identifier (optional) 4) | Further details |
|---|---|---|---|---|---|
| **WN0714-180** | **148** | **65** | **50** | **Pb82** | * |

4) Details on elastomer materials see chapter „Introduction“ and „RINGFEDER® TNM Basic information“ in Product Paper & Tech Paper „RINGFEDER® Elastomer Jaw Couplings“
*) Without any other specification, we deliver as a standard: with set screws and keyway acc. to DIN 6885-1, keyway side fit P9, bore tolerance H7

Further information on
**RINGFEDER® TNM H**
on **www.ringfeder.com**

**Disclaimer of liability**
All technical details and notes are non-binding and cannot be used as a basis for legal claims. The user is obligated to determine whether the represented products meet his requirements. We reserve the right carry out modifications at any time in the interests of technical progress.

# Elastomer Jaw Couplings

# RINGFEDER® TNM LE

## One part design with flange, externally centred

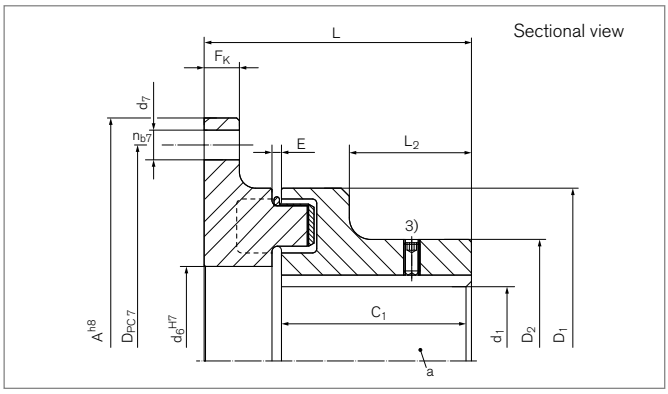


| Identifier | Size | A[4)] | $T_{KNPb72}$[2)] | $T_{KNPb82}$[2)] | $n_{max}$ | $d_{1kmax}$ | $D_1$ | $D_2$ | $C_1$ |
|---|---|---|---|---|---|---|---|---|---|
| | | mm | Nm | Nm | 1/min | mm | mm | mm | mm |
| WN0806-106 | 67 | 106 | 22 | 35 | 10000 | 28 | 67 | 46 | 30 |
| WN0808-120 | 82 | 120 | 48 | 75 | 8000 | 32 | 82 | 53 | 40 |
| WN0809-144 | 97 | 144 | 96 | 150 | 7000 | 45 | 97 | 69 | 50 |
| WN0811-158 | 112 | 158 | 150 | 230 | 6000 | 48 | 112 | 79 | 60 |
| WN0812-180 | 128 | 180 | 250 | 380 | 5000 | 55 | 128 | 90 | 70 |
| WN0814-200 | 148 | 200 | 390 | 600 | 4500 | 65 | 148 | 107 | 80 |
| WN0816-220 | 168 | 220 | 630 | 980 | 4000 | 75 | 168 | 124 | 90 |
| WN0819-248 | 194 | 248 | 1050 | 1650 | 3500 | 85 | 194 | 140 | 100 |
| WN0821-274 | 214 | 274 | 1500 | 2400 | 3000 | 95 | 214 | 157 | 110 |
| WN0824-314 | 240 | 314 | 2400 | 3700 | 2750 | 110 | 240 | 179 | 120 |
| WN0826-344 | 265 | 344 | 3700 | 5800 | 2500 | 120 | 265 | 198 | 140 |
| WN0829-380 | 295 | 380 | 4900 | 7550 | 2250 | 130 | 295 | 214 | 150 |
| WN0833-430 | 330 | 430 | 6400 | 9900 | 2000 | 150 | 330 | 248 | 160 |
| WN0837-480 | 370 | 480 | 8900 | 14000 | 1750 | 170 | 370 | 278 | 180 |
| WN0841-575 | 415 | 575 | 13200 | 20500 | 1500 | 190 | 415 | 315 | 200 |
| WN0848-615 | 480 | 615 | 18000 | 28000 | 1400 | 210 | 480 | 315 | 220 |
| WN0857-692 | 575 | 692 | 27000 | 41000 | 1200 | 230 | 575 | 350 | 240 |

To continue see next page

## Elastomer Jaw Couplings RINGFEDER® TNM LE

| Identifier | Size | $F_K$ | $d_6$ | $D_{PC7}$ | $n_{b7}$ | $d_7$ | L | $L_2$ | E | $F_E$ | $Gw_{FL}$ [1] | $Gw_{ub}$ |
|---|---|---|---|---|---|---|---|---|---|---|---|---|
| | | mm | mm | mm | | mm | mm | mm | mm | mm | kg | kg |
| WN0806-106 | 67 | 8 | 30 | 94 | 6 | 6,6 | 47,5 | 15 | 2,5 | +/- 0,5 | 0,5 | 1,0 |
| WN0808-120 | 82 | 8 | 40 | 108 | 6 | 6,6 | 59 | 24 | 3 | +/- 1,0 | 0,7 | 2,6 |
| WN0809-144 | 97 | 10 | 50 | 128 | 6 | 9 | 73 | 30 | 3 | +/- 1,0 | 1,2 | 2,9 |
| WN0811-158 | 112 | 10 | 60 | 142 | 6 | 9 | 85,5 | 38 | 3,5 | +/- 1,0 | 1,6 | 4,2 |
| WN0812-180 | 128 | 13 | 70 | 160 | 6 | 11 | 98,5 | 45 | 3,5 | +/- 1,0 | 2,5 | 6,6 |
| WN0814-200 | 148 | 13 | 90 | 180 | 7 | 11 | 111,5 | 52 | 3,5 | +/- 1,0 | 3,1 | 9,4 |
| WN0816-220 | 168 | 13 | 100 | 200 | 8 | 11 | 127,5 | 56 | 3,5 | +/- 1,5 | 4,3 | 13,9 |
| WN0819-248 | 194 | 16 | 115 | 224 | 8 | 14 | 141,5 | 62 | 3,5 | +/- 1,5 | 6,3 | 20,3 |
| WN0821-274 | 214 | 16 | 130 | 250 | 8 | 14 | 156 | 68 | 4 | +/- 2,0 | 8,2 | 27,9 |
| WN0824-314 | 240 | 20 | 145 | 282 | 8 | 18 | 169 | 75 | 4 | +/- 2,0 | 11,8 | 38,5 |
| WN0826-344 | 265 | 20 | 160 | 312 | 8 | 18 | 195,5 | 90 | 5,5 | +/- 2,5 | 15,6 | 53,1 |
| WN0829-380 | 295 | 22 | 170 | 348 | 9 | 18 | 210 | 98 | 8 | +/- 2,5 | 20,7 | 68,6 |
| WN0833-430 | 330 | 25 | 200 | 390 | 9 | 22 | 224 | 104 | 8 | +/- 2,5 | 28,1 | 94,6 |
| WN0837-480 | 370 | 25 | 235 | 440 | 10 | 22 | 250 | 118 | 8 | +/- 2,5 | 36,2 | 130,1 |
| WN0841-575 | 415 | 30 | 270 | 528 | 10 | 26 | 273 | 135 | 8 | +/- 2,5 | 55,4 | 185,1 |
| WN0848-615 | 480 | 30 | 320 | 568 | 10 | 26 | 293 | 150 | 8 | +/- 2,5 | 62,4 | 226,8 |
| WN0857-692 | 575 | 30 | 400 | 645 | 10 | 26 | 313 | 170 | 8 | +/- 2,5 | 74,7 | 308,2 |

[1] Weight inclusive the half share of the intermediate ring
[2] Attention on peak load – see chapter „RINGFEDER® TNM Basic information“ in Product Paper & Tech Paper „RINGFEDER® Elastomer Jaw Couplings“
[3] Set screw on demand
[4] Other flange dimensions on request

RINGFEDER® TNM with SAE flange on request

## Explanation

**A** = Max. outer diameter
**$T_{KNPb72}$** = Coupling nominal torque by using the elastic element Pb72
**$T_{KNPb82}$** = Coupling nominal torque by using the elastic element Pb82
**$n_{max}$** = Max. rotation speed
**$d_{1kmax}$** = Max. bore diameter $d_1$ with keyway acc. to DIN 6885-1
**$D_1$** = Outer diameter
**$D_2$** = Outer diameter hub
**$C_1$** = Guided length in hub bore
**$F_K$** = Flange thickness
**$d_6$** = Inner diameter
**$D_{PC7}$** = Pitch circle diameter of bore holes $d_7$
**$n_{b7}$** = Quantity of bore $d_7$
**$d_7$** = Bore diameter
**L** = Total length
**$L_2$** = Length on the hub
**E** = Gap width between left and right component
**$F_E$** = Tolerance of the gap width E
**$Gw_{FL}$** = Weight flange side
**$Gw_{ub}$** = Weight, unbored

## Ordering example

| Identifier | Size | $d_{1k}$ | Buffer identifier (optional) [5] | Further details |
|---|---|---|---|---|
| **WN0819-248** | **148** | **80** | **Pb82** | * |

[5] Details on elastomer materials see chapter „Introduction“ and „RINGFEDER® TNM Basic information“ in Product Paper & Tech Paper „RINGFEDER® Elastomer Jaw Couplings“
*) Without any other specification, we deliver as a standard: with set screws and keyway acc. to DIN 6885-1, keyway side fit P9, bore tolerance H7

Further information on
**RINGFEDER® TNM LE**
on **www.ringfeder.com**

**Disclaimer of liability**
All technical details and notes are non-binding and cannot be used as a basis for legal claims. The user is obligated to determine whether the represented products meet his requirements. We reserve the right carry out modifications at any time in the interests of technical progress.

RINGFEDER POWER TRANSMISSION

# Elastomer Jaw Couplings

# RINGFEDER® TNM LG

## Multi-part design, to change the intermediate ring without axial movement of the driven parts with flange, externally centred

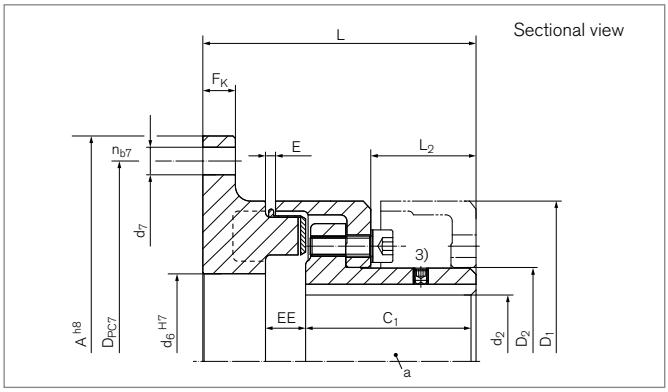


| Identifier | Size | A[4)] | $T_{KNPb72}$[2)] | $T_{KNPb82}$[2)] | $n_{max}$ | $d_{1kmax}$ | $D_1$ | $D_2$ | $C_1$ |
|---|---|---|---|---|---|---|---|---|---|
| | | mm | Nm | Nm | 1/min | mm | mm | mm | mm |
| WN0908-120 | 82 | 120 | 48 | 75 | 8000 | 32 | 82 | 44,5 | 40 |
| WN0909-144 | 97 | 144 | 96 | 150 | 7000 | 39 | 97 | 54,5 | 49 |
| WN0911-158 | 112 | 158 | 150 | 230 | 6000 | 46 | 112 | 64,5 | 58 |
| WN0912-180 | 128 | 180 | 250 | 380 | 5000 | 53 | 128 | 74,5 | 68 |
| WN0914-200 | 148 | 200 | 390 | 600 | 4500 | 65 | 148 | 92,5 | 78 |
| WN0916-220 | 168 | 220 | 630 | 980 | 4000 | 75 | 168 | 104,5 | 87 |
| WN0919-248 | 194 | 248 | 1050 | 1650 | 3500 | 85 | 194 | 121,5 | 97 |
| WN0921-274 | 214 | 274 | 1500 | 2400 | 3000 | 95 | 214 | 135,5 | 107 |
| WN0924-314 | 240 | 314 | 2400 | 3700 | 2750 | 100 | 240 | 146 | 117 |
| WN0926-344 | 265 | 344 | 3700 | 5800 | 2500 | 115 | 265 | 164 | 137 |
| WN0929-380 | 295 | 380 | 4900 | 7550 | 2250 | 130 | 295 | 181 | 147 |
| WN0933-430 | 330 | 430 | 6400 | 9900 | 2000 | 135 | 330 | 208 | 156 |
| WN0937-480 | 370 | 480 | 8900 | 14000 | 1750 | 160 | 370 | 241 | 176 |
| WN0941-575 | 415 | 575 | 13200 | 20500 | 1500 | 180 | 415 | 275 | 196 |
| WN0948-615 | 480 | 615 | 18000 | 28000 | 1400 | 200 | 480 | 289 | 220 |
| WN0957-692 | 575 | 692 | 27000 | 41000 | 1200 | 260 | 575 | 368 | 240 |

To continue see next page

## Elastomer Jaw Couplings RINGFEDER® TNM LG

| Identifier | Size | $F_K$ | $d_6$ | $D_{PC7}$ | $n_{b7}$ | $d_7$ | L | $L_2$ | E | $F_E$ | $Gw_{FL}$ [1] | $Gw_{ub}$ |
|---|---|---|---|---|---|---|---|---|---|---|---|---|
| | | mm | mm | mm | | mm | mm | mm | mm | mm | kg | kg |
| WN0908-120 | 82 | 8 | 40 | 108 | 6 | 6,6 | 68 | 20 | 3 | +/- 1,0 | 0,7 | 1,8 |
| WN0909-144 | 97 | 10 | 50 | 128 | 6 | 9 | 83 | 30,5 | 3 | +/- 1,0 | 1,2 | 2,9 |
| WN0911-158 | 112 | 10 | 60 | 142 | 6 | 9 | 95 | 32,5 | 3,5 | +/- 1,0 | 1,6 | 4,4 |
| WN0912-180 | 128 | 13 | 70 | 160 | 6 | 11 | 109 | 42 | 3,5 | +/- 1,0 | 2,5 | 6,7 |
| WN0914-200 | 148 | 13 | 90 | 180 | 7 | 11 | 124 | 47 | 3,5 | +/- 1,0 | 3,1 | 9,8 |
| WN0916-220 | 168 | 13 | 100 | 200 | 8 | 11 | 142 | 52,5 | 3,5 | +/- 1,5 | 4,3 | 14,0 |
| WN0919-248 | 194 | 16 | 115 | 224 | 8 | 14 | 159 | 60 | 3,5 | +/- 1,5 | 6,3 | 21,0 |
| WN0921-274 | 214 | 16 | 130 | 250 | 8 | 14 | 175 | 66,5 | 4 | +/- 2,0 | 8,2 | 27,9 |
| WN0924-314 | 240 | 20 | 145 | 282 | 8 | 18 | 192 | 75,5 | 4 | +/- 2,0 | 11,8 | 37,6 |
| WN0926-344 | 265 | 20 | 160 | 312 | 8 | 18 | 220 | 88 | 5,5 | +/- 2,5 | 15,6 | 53,4 |
| WN0929-380 | 295 | 22 | 170 | 348 | 9 | 18 | 236 | 96 | 8 | +/- 2,5 | 20,7 | 70,2 |
| WN0933-430 | 330 | 25 | 200 | 390 | 9 | 22 | 252 | 101,5 | 8 | +/- 2,5 | 28,1 | 91,7 |
| WN0937-480 | 370 | 25 | 235 | 440 | 10 | 22 | 281 | 117 | 8 | +/- 2,5 | 36,2 | 126,0 |
| WN0941-575 | 415 | 30 | 270 | 528 | 10 | 26 | 306 | 131 | 8 | +/- 2,5 | 55,4 | 183,9 |
| WN0948-615 | 480 | 30 | 320 | 568 | 10 | 26 | 330 | 149 | 8 | +/- 2,5 | 62,4 | 244,7 |
| WN0957-692 | 575 | 30 | 400 | 645 | 10 | 26 | 350 | 168 | 8 | +/- 2,5 | 74,7 | 370,1 |

[1] Weight inclusive the half share of the intermediate ring
[2] Attention on peak load – see chapter „RINGFEDER® TNM Basic information“ in Product Paper & Tech Paper „RINGFEDER® Elastomer Jaw Couplings“
[3] Set screw on demand
[4] Other flange dimensions on request

RINGFEDER® TNM with SAE flange on request

## Explanation

**A** = Max. outer diameter
**$T_{KNPb72}$** = Coupling nominal torque by using the elastic element Pb72
**$T_{KNPb82}$** = Coupling nominal torque by using the elastic element Pb82
**$n_{max}$** = Max. rotation speed
**$d_{1kmax}$** = Max. bore diameter $d_1$ with keyway acc. to DIN 6885-1
**$D_1$** = Outer diameter
**$D_2$** = Outer diameter hub
**$C_1$** = Guided length in hub bore
**$F_K$** = Flange thickness
**$d_6$** = Inner diameter
**$D_{PC7}$** = Pitch circle diameter of bore holes $d_7$
**$n_{b7}$** = Quantity of bore $d_7$
**$d_7$** = Bore diameter
**L** = Total length
**$L_2$** = Length on the hub
**E** = Gap width between left and right component
**$F_E$** = Tolerance of the gap width E
**EE** = Distance of the hubs
**$Gw_{FL}$** = Weight flange side
**$Gw_{ub}$** = Weight, unbored

## Ordering example

| Identifier | Size | $d_{1k}$ | Buffer identifier (optional) [5] | Further details |
|---|---|---|---|---|
| **WN0919-248** | **194** | **80** | **Pb82** | * |

[5] Details on elastomer materials see chapter „Introduction“ and „RINGFEDER® TNM Basic information“ in Product Paper & Tech Paper „RINGFEDER® Elastomer Jaw Couplings“
*) Without any other specification, we deliver as a standard: with set screws and keyway acc. to DIN 6885-1, keyway side fit P9, bore tolerance H7

Further information on
**RINGFEDER® TNM LG**
on **www.ringfeder.com**

**Disclaimer of liability**
All technical details and notes are non-binding and cannot be used as a basis for legal claims. The user is obligated to determine whether the represented products meet his requirements. We reserve the right carry out modifications at any time in the interests of technical progress.

# Elastomer Jaw Couplings

# RINGFEDER® TNM GHBS

## With brake disc in steel, multi-part design, to change the intermediate ring and the brake disc without axial movement of the driven parts

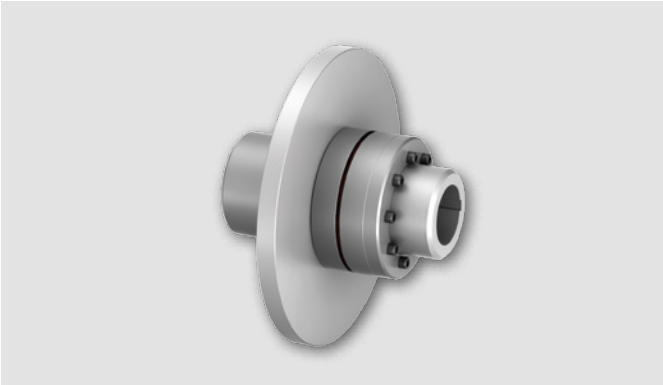

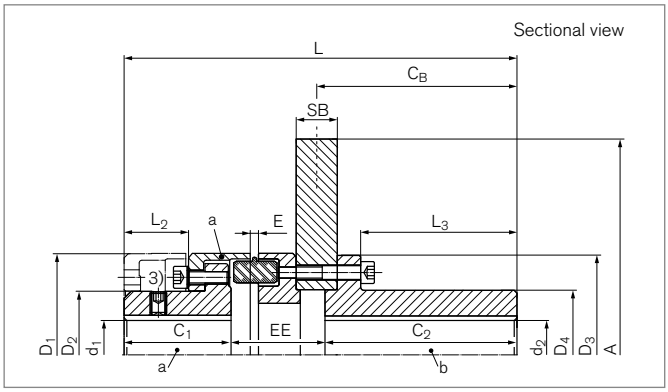


| Identifier | Size | A | SB | $T_{KNPb72}$ 2) | $T_{KNPb82}$ 2) | $T_{BR}$ 4) | $n_{max}$ | $d_{1kmax}$ | $d_{2kmax}$ | $D_1$ | $D_2$ | $D_3$ | $D_4$ | $C_1$ | $C_2$ |
|---|---|---|---|---|---|---|---|---|---|---|---|---|---|---|---|
| | | mm | mm | Nm | Nm | Nm | 1/min | mm | mm | mm | mm | mm | mm | mm | mm |
| WN1514-315 | 148 | 315 | 30 | 390 | 600 | 1000 | 4500 | 65 | 65 | 148 | 92,5 | 145 | 94 | 78 | 140 |
| WN1516-355 | 168 | 355 | 30 | 630 | 980 | 1600 | 4000 | 75 | 80 | 168 | 104,5 | 168 | 115 | 87 | 140 |
| WN1516-400 | 168 | 400 | 30 | 630 | 980 | 1600 | 4000 | 75 | 80 | 168 | 104,5 | 168 | 115 | 87 | 140 |
| WN1516-450 | 168 | 450 | 30 | 630 | 980 | 1600 | 3750 | 75 | 80 | 168 | 104,5 | 168 | 115 | 87 | 140 |
| WN1519-400 | 194 | 400 | 30 | 1050 | 1650 | 2750 | 3500 | 85 | 95 | 194 | 121,5 | 194 | 135 | 97 | 140 |
| WN1519-560 | 194 | 560 | 30 | 1050 | 1650 | 2750 | 3000 | 85 | 95 | 194 | 121,5 | 194 | 135 | 97 | 140 |
| WN1524-450 | 240 | 450 | 30 | 2400 | 3700 | 4200 | 2750 | 100 | 115 | 240 | 146 | 225 | 165 | 117 | 140 |
| WN1524-560 | 240 | 560 | 30 | 2400 | 3700 | 4200 | 2750 | 100 | 115 | 240 | 146 | 225 | 165 | 117 | 140 |
| WN1524-630 | 240 | 630 | 30 | 2400 | 3700 | 4200 | 2750 | 100 | 115 | 240 | 146 | 225 | 165 | 117 | 140 |
| WN1526-500 | 265 | 500 | 30 | 3700 | 5800 | 8700 | 2500 | 115 | 135 | 265 | 164 | 265 | 195 | 137 | 140 |
| WN1526-560 | 265 | 560 | 30 | 3700 | 5800 | 8700 | 2500 | 115 | 135 | 265 | 164 | 265 | 195 | 137 | 140 |
| WN1526-710 | 265 | 710 | 30 | 3700 | 5800 | 8700 | 2400 | 115 | 135 | 265 | 164 | 265 | 195 | 137 | 140 |
| WN1529-630 | 295 | 630 | 30 | 4900 | 7550 | 9800 | 2250 | 130 | 153 | 295 | 181 | 295 | 215 | 147 | 140 |
| WN1529-710 | 295 | 710 | 30 | 4900 | 7550 | 9800 | 2250 | 130 | 153 | 295 | 181 | 295 | 215 | 147 | 140 |

To continue see next page

## Elastomer Jaw Couplings RINGFEDER® TNM GHBS

| Identifier | Size | $C_B$ | L | $L_2$ | $L_3$ | E | $F_E$ | EE | Gwa[1)] | $Gw_{ub}$ |
|---|---|---|---|---|---|---|---|---|---|---|
| | | mm | mm | mm | mm | mm | mm | mm | kg | kg |
| WN1514-315 | 148 | 146 | 286,5 | 47 | 119 | 6 | +/- 1,0 | 68,5 | 6,7 | 34 |
| WN1516-355 | 168 | 146 | 304,5 | 52,5 | 116 | 6 | +/- 1,5 | 77,5 | 9,7 | 46 |
| WN1516-400 | 168 | 146 | 304,5 | 52,5 | 116 | 6 | +/- 1,5 | 77,5 | 9,7 | 52 |
| WN1516-450 | 168 | 146 | 304,5 | 52,5 | 116 | 6 | +/- 1,5 | 77,5 | 9,7 | 60 |
| WN1519-400 | 194 | 146 | 321,5 | 60 | 112 | 6 | +/- 1,5 | 84,5 | 14,6 | 63 |
| WN1519-560 | 194 | 146 | 321,5 | 60 | 112 | 6 | +/- 1,5 | 84,5 | 14,6 | 91 |
| WN1524-450 | 240 | 146 | 354 | 75,5 | 109,5 | 6,5 | +/- 2,0 | 97 | 25,7 | 92 |
| WN1524-560 | 240 | 146 | 354 | 75,5 | 109,5 | 6,5 | +/- 2,0 | 97 | 25,7 | 113 |
| WN1524-630 | 240 | 146 | 354 | 75,5 | 109,5 | 6,5 | +/- 2,0 | 97 | 25,7 | 128 |
| WN1526-500 | 265 | 146 | 381,5 | 88 | 107 | 7 | +/- 2,0 | 104,5 | 37,8 | 125 |
| WN1526-560 | 265 | 146 | 381,5 | 88 | 107 | 7 | +/- 2,0 | 104,5 | 37,8 | 137 |
| WN1526-710 | 265 | 146 | 381,5 | 88 | 107 | 7 | +/- 2,0 | 104,5 | 37,8 | 172 |
| WN1529-630 | 295 | 146 | 396,5 | 96 | 106 | 8 | +/- 2,0 | 109,5 | 49,3 | 175 |
| WN1529-710 | 295 | 146 | 396,5 | 96 | 106 | 8 | +/- 2,0 | 109,5 | 49,3 | 194 |

1) Weight inclusive the half share of the intermediate ring
2) Attention on peak load – see chapter „RINGFEDER® TNM Basic information“ in Product Paper & Tech Paper „RINGFEDER® Elastomer Jaw Couplings“
3) Set screw on demand
4) Choose brake disc assembly in a way, that brake torque does not affect intermediate ring

## Explanation

**A** = Max. outer diameter
**SB** = Disc width
**$T_{KNPb72}$** = Coupling nominal torque by using the elastic element Pb72
**$T_{KNPb82}$** = Coupling nominal torque by using the elastic element Pb82
**$T_{BR}$** = Brake torque
**$n_{max}$** = Max. rotation speed
**$d_{1kmax}$** = Max. bore diameter $d_1$ with keyway acc. to DIN 6885-1
**$d_{2kmax}$** = Max. bore diameter $d_2$ with keyway acc. to DIN 6885-1
**$D_1$** = Outer diameter
**$D_2$** = Outer diameter hub
**$D_3$** = Outer diameter hub
**$D_4$** = Outer diameter hub
**$C_1$** = Guided length in hub bore
**$C_2$** = Guided length in hub bore
**$C_B$** = Brake disc distance
**L** = Total length
**$L_2$** = Length on the hub
**$L_3$** = Length
**E** = Gap width between left and right component
**$F_E$** = Tolerance of the gap width E
**EE** = Distance of the hubs
**Gwa** = Weight of subassembly a
**$Gw_{ub}$** = Weight, unbored

## Ordering example

| Identifier | Size | $d_{1k}$ | $d_{2k}$ | Buffer identifier (optional) 5) | Further details |
|---|---|---|---|---|---|
| **WN1519-560** | **194** | **80** | **62** | **Pb82** | * |

5) Details on elastomer materials see chapter „Introduction“ and „RINGFEDER® TNM Basic information“ in Product Paper & Tech Paper „RINGFEDER® Elastomer Jaw Couplings“
*) Without any other specification, we deliver as a standard: with set screws and keyway acc. to DIN 6885-1, keyway side fit P9, bore tolerance H7

Further information on
**RINGFEDER® TNM GHBS**
on **www.ringfeder.com**

**Disclaimer of liability**
All technical details and notes are non-binding and cannot be used as a basis for legal claims. The user is obligated to determine whether the represented products meet his requirements. We reserve the right carry out modifications at any time in the interests of technical progress.

# Elastomer Jaw Couplings
# RINGFEDER® TNS S-St
## Coupling with standard hubs

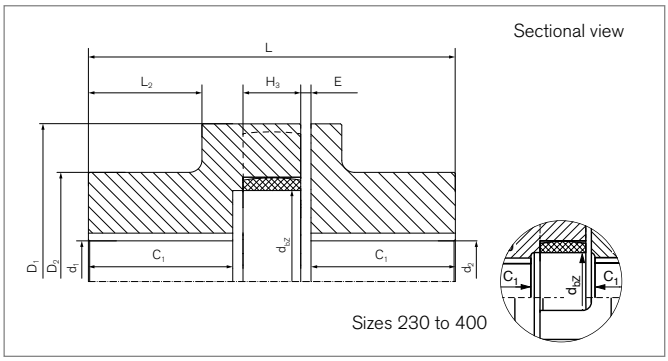


| Identifier | Size | $T_{KN}$ | $T_{Kmax}$ | $n_{max}$ | $d_{1kmax}$ | $d_{2kmax}$ | $D_1$ | $D_2$ | $C_1$ |
|---|---|---|---|---|---|---|---|---|---|
| | | Nm | Nm | 1/min | mm | mm | mm | mm | mm |
| WS0105 | 50 | 15 | 40 | 15000 | 25 | 25 | 50 | 41 | 30 |
| WS0107 | 70 | 55 | 160 | 11000 | 38 | 38 | 70 | 55 | 38,5 |
| WS0108 | 85 | 75 | 225 | 9000 | 40 | 40 | 85 | 60 | 43,5 |
| WS0110 | 100 | 130 | 390 | 7250 | 48 | 48 | 105 | 75 | 49,5 |
| WS0112 | 125 | 250 | 750 | 6000 | 55 | 55 | 126 | 85 | 56,5 |
| WS0114 | 145 | 400 | 1200 | 5250 | 65 | 65 | 145 | 95 | 61 |
| WS0117 | 170 | 630 | 1900 | 4500 | 85 | 85 | 170 | 120 | 75 |
| WS0120 | 200 | 1100 | 3300 | 3750 | 95 | 95 | 200 | 135 | 99 |
| WS0123 | 230 | 1700 | 5150 | 3250 | 105 | 105 | 230 | 150 | 110 |
| WS0126 | 260 | 2650 | 7950 | 3000 | 125 | 125 | 260 | 180 | 112,5 |
| WS0130 | 300 | 3900 | 11700 | 2500 | 140 | 140 | 300 | 200 | 131,5 |
| WS0136 | 360 | 6500 | 19500 | 2150 | 150 | 150 | 360 | 210 | 172 |
| WS0140 | 400 | 8900 | 26700 | 1900 | 160 | 160 | 400 | 225 | 163,5 |

| Identifier | Size | L | $L_2$ | E | $F_E$ | $H_3$ | $d_{be}$ | $Gw_{ub}$ |
|---|---|---|---|---|---|---|---|---|
| | | mm | mm | mm | mm | mm | mm | kg |
| WS0105 | 50 | 75 | 23,5 | 1,5 | + 1,0 | 12 | 19 | 0,8 |
| WS0107 | 70 | 100 | 31,5 | 2,5 | + 1,5 | 18 | 26 | 1,8 |
| WS0108 | 85 | 110 | 35 | 2,5 | + 2,0 | 18 | 38 | 2,7 |
| WS0110 | 100 | 125 | 37,5 | 3 | + 2,0 | 20 | 42 | 4,9 |
| WS0112 | 125 | 145 | 44 | 3,5 | + 2,5 | 25 | 54 | 7,5 |
| WS0114 | 145 | 160 | 47,5 | 4 | + 2,5 | 30 | 66 | 10,6 |
| WS0117 | 170 | 190 | 60,5 | 5 | + 3,0 | 30 | 90 | 18,0 |
| WS0120 | 200 | 245 | 79,5 | 6 | + 3,0 | 35 | 100 | 31,0 |
| WS0123 | 230 | 270 | 88,5 | 7 | + 3,5 | 35 | 115 | 43,5 |
| WS0126 | 260 | 285 | 88,5 | 7 | + 4,0 | 45 | 150 | 63,0 |
| WS0130 | 300 | 330 | 107,5 | 7 | + 4,0 | 50 | 162 | 91,5 |
| WS0136 | 360 | 417 | 140 | 8 | + 4,0 | 55 | 215 | 146,2 |
| WS0140 | 400 | 400 | 137 | 7,5 | + 4,0 | 55 | 250 | 160,4 |

For further information see chapter „Introduction“ as well as chapter „Elastomer Jaw Couplings RINGFEDER® TNS Basic information“ in the Product Paper & Tech Paper „RINGFEDER® Elastomer Jaw Couplings“

To continue see next page

# Elastomer Jaw Couplings RINGFEDER® TNS S-St

## Explanation

| | | | | | |
|---|---|---|---|---|---|
| $T_{KN}$ | = Nom. Transmissible torque | $D_1$ | = Outer diameter | $H_3$ | = Length of damping module |
| $T_{Kmax}$ | = Max. transmissible torque of the coupling | $D_2$ | = Outer diameter hub | $d_{be}$ | = Inner diameter elastic intermediate ring |
| $n_{max}$ | = Max. rotation speed | $C_1$ | = Guided length in hub bore | $Gw_{ub}$ | = Weight, unbored |
| $d_{1kmax}$ | = Max. bore diameter $d_1$ with keyway acc. to DIN 6885-1 | $L$ | = Total length | | |
| $d_{2kmax}$ | = Max. bore diameter $d_2$ with keyway acc. to DIN 6885-1 | $L_2$ | = Length on the hub | | |
| | | $E$ | = Gap width between left and right component | | |
| | | $F_E$ | = Tolerance of the gap width E | | |

## Ordering example

| Identifier | Size | $d_{1k}$ | $d_{2k}$ | Further details |
|---|---|---|---|---|
| WS0117 | 170 | 85 | 85 | * |

*) Without any other specification, we deliver as a standard: with set screws and keyway acc. to DIN 6885-1, keyway side fit P9, bore tolerance H7

Further information on
**RINGFEDER® TNS S-St**
on **www.ringfeder.com**

**Disclaimer of liability**
All technical details and notes are non-binding and cannot be used as a basis for legal claims. The user is obligated to determine whether the represented products meet his requirements. We reserve the right carry out modifications at any time in the interests of technical progress.

# Elastomer Jaw Couplings
# RINGFEDER® TNS S-LSt
## Coupling with extended hubs

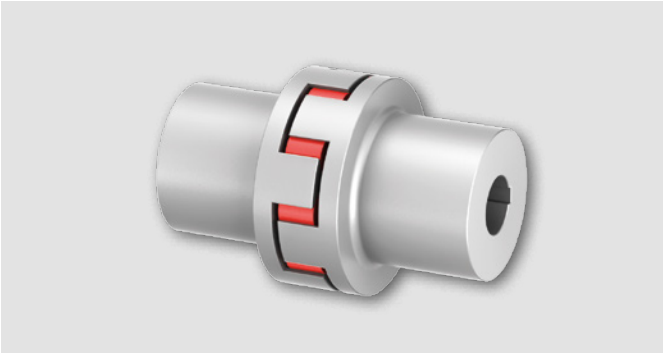

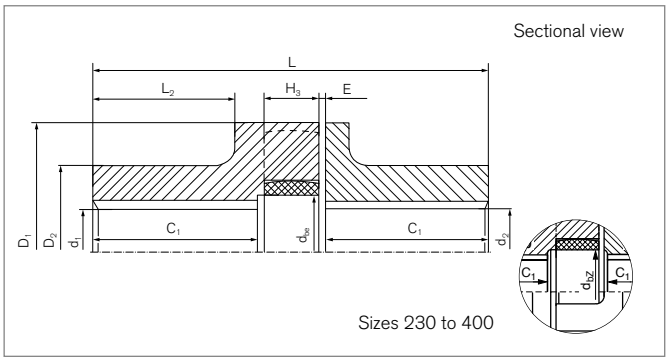


| Identifier | Size | $T_{KN}$ | $T_{Kmax}$ | $n_{max}$ | $d_{1kmax}$ | $d_{2kmax}$ | $D_1$ | $D_2$ | $C_1$ |
|---|---|---|---|---|---|---|---|---|---|
| | | Nm | Nm | 1/min | mm | mm | mm | mm | mm |
| WS0105-L | 50 | 15 | 40 | 15000 | 25 | 25 | 50 | 42 | 40,5 |
| WS0108-L | 85 | 75 | 225 | 9000 | 40 | 40 | 85 | 60 | 80,5 |
| WS0110-L | 100 | 130 | 390 | 7250 | 42 | 42 | 105 | 65 | 80,5 |
| WS0112-L | 125 | 250 | 750 | 6000 | 55 | 55 | 126 | 85 | 110,5 |
| WS0114-L | 145 | 400 | 1200 | 5250 | 65 | 65 | 145 | 95 | 110,5 |
| WS0117-L | 170 | 630 | 1900 | 4500 | 85 | 85 | 170 | 120 | 140,5 |
| WS0120-L | 200 | 1100 | 3300 | 3750 | 95 | 95 | 200 | 135 | 140 |
| WS0123-L | 230 | 1700 | 5150 | 3250 | 105 | 105 | 230 | 150 | 170 |
| WS0126-L | 260 | 2650 | 7950 | 3000 | 125 | 125 | 260 | 180 | 170 |
| WS0140-L | 400 | 8900 | 26700 | 1900 | 160 | 160 | 400 | 225 | 183,5 |

| Identifier | Size | L | $L_2$ | E | $F_E$ | $H_3$ | $d_{be}$ | $Gw_{ub}$ |
|---|---|---|---|---|---|---|---|---|
| | | mm | mm | mm | mm | mm | mm | kg |
| WS0105-L | 50 | 96 | 34 | 1,5 | + 1,0 | 12 | 19 | 1,0 |
| WS0108-L | 85 | 184 | 72 | 2,5 | + 2,0 | 18 | 38 | 4,3 |
| WS0110-L | 100 | 187 | 68,5 | 3 | + 2,0 | 20 | 42 | 5,8 |
| WS0112-L | 125 | 253 | 98 | 3,5 | + 2,5 | 25 | 54 | 12,3 |
| WS0114-L | 145 | 259 | 97 | 4 | + 2,5 | 30 | 66 | 16,1 |
| WS0117-L | 170 | 321 | 126 | 5 | + 3,0 | 30 | 90 | 29,6 |
| WS0120-L | 200 | 328 | 124 | 6 | + 3,0 | 35 | 100 | 39,6 |
| WS0123-L | 230 | 390 | 151 | 7 | + 3,5 | 35 | 115 | 59,0 |
| WS0126-L | 260 | 400 | 146 | 7 | + 4,0 | 45 | 150 | 85,3 |
| WS0140-L | 400 | 440 | 157 | 7,5 | + 4,0 | 55 | 250 | 173,0 |

For further information see chapter „Introduction“ as well as chapter „Elastomer Jaw Couplings RINGFEDER® TNS Basic information“ in the Product Paper & Tech Paper „RINGFEDER® Elastomer Jaw Couplings“

To continue see next page

# Elastomer Jaw Couplings RINGFEDER® TNS S-LSt

## Explanation

| | | | | | |
|---|---|---|---|---|---|
| $T_{KN}$ | = Nom. Transmissible torque | $D_1$ | = Outer diameter | $F_E$ | = Tolerance of the gap width E |
| $T_{Kmax}$ | = Max. transmissible torque of the coupling | $D_2$ | = Outer diameter hub | $H_3$ | = Length of damping module |
| $n_{max}$ | = Max. rotation speed | $C_1$ | = Guided length in hub bore | $d_{be}$ | = Inner diameter elastic intermediate ring |
| $d_{1kmax}$ | = Max. bore diameter $d_1$ with keyway acc. to DIN 6885-1 | L | = Total length | $Gw_{ub}$ | = Weight, unbored |
| $d_{2kmax}$ | = Max. bore diameter $d_2$ with keyway acc. to DIN 6885-1 | $L_2$ | = Length on the hub | | |
| | | E | = Gap width between left and right component | | |

## Ordering example

| Identifier | Size | $d_{1k}$ | $d_{2k}$ | Further details |
|---|---|---|---|---|
| WS0117-L | 170 | 85 | 85 | * |

*) Without any other specification, we deliver as a standard: with set screws and keyway acc. to DIN 6885-1, keyway side fit P9, bore tolerance H7

Further information on
**RINGFEDER® TNS S-LSt**
on **www.ringfeder.com**

**Disclaimer of liability**
All technical details and notes are non-binding and cannot be used as a basis for legal claims. The user is obligated to determine whether the represented products meet his requirements. We reserve the right carry out modifications at any time in the interests of technical progress.

# Elastomer Jaw Couplings
# RINGFEDER® TNS S-BT
## Coupling with standard hub and brake drum

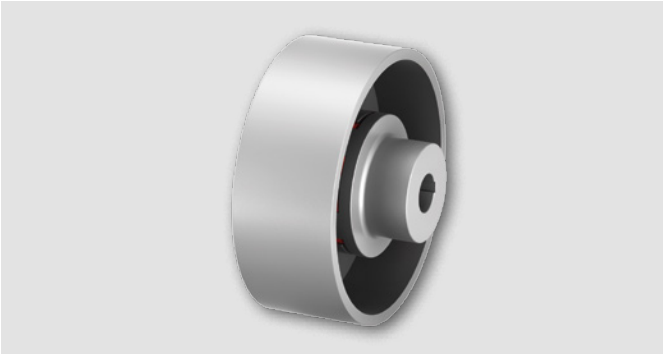

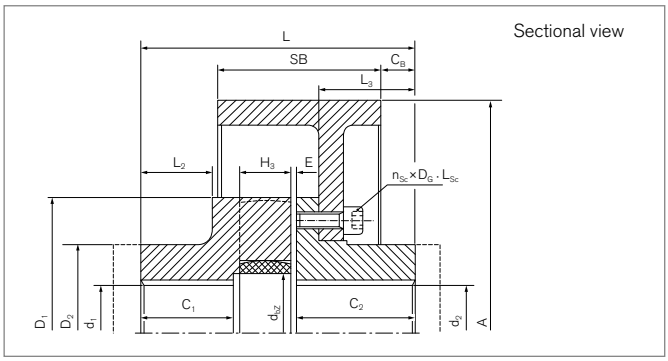


| Identifier | Size | A | SB | $T_{KN}$ | $T_{Kmax}$ | $T_{BR}$ | $n_{max}$ | $d_{1kmax}$ | $d_{2kmax}$ | $D_1$ | $D_2$ | $C_1$ | $C_2$ | $C_B$ |
|---|---|---|---|---|---|---|---|---|---|---|---|---|---|---|
| | | mm | mm | Nm | Nm | Nm | 1/min | mm | mm | mm | mm | mm | mm | mm |
| WS0510-200 | 100 | 200 | 75 | 130 | 390 | 260 | 4200 | 48 | 42 | 105 | 75 | 49,5 | 49,5 | 14 |
| WS0512-200 | 125 | 200 | 75 | 250 | 750 | 310 | 4200 | 55 | 55 | 126 | 85 | 56,5 | 56,5 | 20 |
| WS0514-200 | 145 | 200 | 75 | 400 | 1200 | 730 | 4200 | 65 | 65 | 145 | 95 | 61 | 61 | 21 |
| WS0514-250 | 145 | 250 | 95 | 400 | 1200 | 730 | 3400 | 65 | 65 | 145 | 95 | 61 | 61 | 13 |
| WS0517-250 | 170 | 250 | 95 | 630 | 1900 | 1200 | 3400 | 85 | 85 | 170 | 120 | 75 | 75 | 27 |
| WS0517-315 | 170 | 315 | 118 | 630 | 1900 | 1350 | 2700 | 85 | 85 | 170 | 120 | 75 | 75 | 13 |
| WS0520-315 | 200 | 315 | 118 | 1100 | 3300 | 2450 | 2700 | 95 | 95 | 200 | 135 | 99 | 99 | 38 |
| WS0520-400 | 200 | 400 | 150 | 1100 | 3300 | 2650 | 2100 | 95 | 95 | 200 | 135 | 99 | 99 | 26 |
| WS0523-400 | 230 | 400 | 150 | 1700 | 5150 | 3800 | 2100 | 105 | 105 | 230 | 150 | 110 | 110 | 36 |
| WS0523-500 | 230 | 500 | 190 | 1700 | 5150 | 3800 | 1700 | 105 | 105 | 230 | 150 | 110 | 110 | 25 |
| WS0526-500 | 260 | 500 | 190 | 2650 | 7950 | 9000 | 1700 | 125 | 125 | 260 | 180 | 112,5 | 112,5 | 25 |
| WS0530-630 | 300 | 630 | 236 | 3900 | 11700 | 10500 | 1360 | 140 | 140 | 300 | 200 | 131,5 | 131,5 | 20 |
| WS0530-710 | 300 | 710 | 265 | 3900 | 11700 | 11000 | 1200 | 140 | 140 | 300 | 200 | 131,5 | 131,5 | 0 |
| WS0536-630 | 360 | 630 | 236 | 6500 | 19500 | 26000 | 1360 | 150 | 150 | 360 | 210 | 172 | 172 | 51 |
| WS0536-710 | 360 | 710 | 265 | 6500 | 19500 | 26000 | 1200 | 150 | 150 | 360 | 210 | 172 | 172 | 34 |
| WS0540-710 | 400 | 710 | 265 | 8900 | 26700 | 35000 | 1200 | 160 | 160 | 400 | 225 | 163,5 | 163,5 | 30 |

For further information see chapter „Introduction“ as well as chapter „Elastomer Jaw Couplings RINGFEDER® TNS Basic information“ in the Product Paper & Tech Paper „RINGFEDER® Elastomer Jaw Couplings“

To continue see next page

## Elastomer Jaw Couplings RINGFEDER® TNS S-BT

| Identifier | Size | $C_B$ | L | $L_2$ | $L_3$ | E | $F_E$ | $H_3$ | $d_{be}$ | Screws ISO 4762 - 8.8 $n_{Sc}$ | $D_G$ | $L_{Sc}$ | $T_A$ [1)] | $Gw_{ub}$ |
|---|---|---|---|---|---|---|---|---|---|---|---|---|---|---|
| | | mm | mm | mm | mm | mm | mm | mm | mm | | mm | mm | Nm | kg |
| WS0510-200 | 100 | 14 | 125 | 37,5 | 39,5 | 3 | + 2,0 | 20 | 42 | 6 | 8 | 20 | 25 | 9,4 |
| WS0512-200 | 125 | 20 | 145 | 44 | 45,5 | 3.5 | + 2,5 | 25 | 54 | 6 | 8 | 20 | 25 | 12,0 |
| WS0514-200 | 145 | 21 | 160 | 47,5 | 48,5 | 4 | + 2,5 | 30 | 66 | 6 | 10 | 25 | 49 | 15,2 |
| WS0514-250 | 145 | 13 | 160 | 47,5 | 48,5 | 4 | + 2,5 | 30 | 66 | 6 | 10 | 25 | 49 | 19,8 |
| WS0517-250 | 170 | 27 | 190 | 60,5 | 62 | 5 | + 3,0 | 30 | 90 | 8 | 10 | 25 | 49 | 26,7 |
| WS0517-315 | 170 | 13 | 190 | 60,5 | 62 | 5 | + 3,0 | 30 | 90 | 8 | 10 | 30 | 49 | 36,1 |
| WS0520-315 | 200 | 38 | 245 | 79,5 | 84 | 6 | + 3,0 | 35 | 100 | 8 | 12 | 30 | 85 | 48,0 |
| WS0520-400 | 200 | 26 | 245 | 79,5 | 84 | 6 | + 3,0 | 35 | 100 | 8 | 12 | 35 | 85 | 64,6 |
| WS0523-400 | 230 | 36 | 270 | 88,5 | 93 | 7 | + 3,5 | 35 | 115 | 10 | 12 | 35 | 85 | 75,8 |
| WS0523-500 | 230 | 25 | 270 | 88,5 | 93 | 7 | + 3,5 | 35 | 115 | 10 | 12 | 35 | 85 | 103,1 |
| WS0526-500 | 260 | 25 | 285 | 88,5 | 91 | 7 | + 4,0 | 45 | 150 | 10 | 16 | 40 | 210 | 121,6 |
| WS0530-630 | 300 | 20 | 330 | 107,5 | 110,5 | 7 | + 4,0 | 50 | 162 | 10 | 16 | 45 | 210 | 199,4 |
| WS0530-710 | 300 | 0 | 330 | 107,5 | 110,5 | 7 | + 4,0 | 50 | 162 | 10 | 16 | 50 | 210 | 255,9 |
| WS0536-630 | 360 | 51 | 417 | 140 | 144 | 8 | + 4,0 | 55 | 215 | 12 | 20 | 50 | 425 | 261,0 |
| WS0536-710 | 360 | 34 | 417 | 140 | 144 | 8 | + 4,0 | 55 | 215 | 12 | 20 | 55 | 425 | 304,5 |
| WS0540-710 | 400 | 30 | 400 | 137 | 141 | 7.5 | + 4,0 | 55 | 250 | 14 | 20 | 50 | 425 | 317,6 |

## Explanation

**A** = Max. outer diameter
**SB** = Disc width
**$T_{KN}$** = Nom. Transmissible torque
**$T_{Kmax}$** = Max. transmissible torque of the coupling
**$T_{BR}$** = Brake torque
**$n_{max}$** = Max. rotation speed
**$d_{1kmax}$** = Max. bore diameter $d_1$ with keyway acc. to DIN 6885-1
**$d_{2kmax}$** = Max. bore diameter $d_2$ with keyway acc. to DIN 6885-1
**$D_1$** = Outer diameter
**$D_2$** = Outer diameter hub
**$C_1$** = Guided length in hub bore
**$C_1$** = Guided length in hub bore
**$C_B$** = Brake disc distance
**L** = Total length
**$L_2$** = Length on the hub
**$L_3$** = Length
**E** = Gap width between left and right component
**$F_E$** = Tolerance of the gap width E
**$H_3$** = Length of damping module
**$d_{be}$** = Inner diameter elastic intermediate ring
**$n_{Sc}$** = Quantity of screws
**$D_G$** = Thread
**$L_{Sc}$** = Screw length
**$F_{Sc}$** = Screw strength class
**$T_A$** = Max tightened torque of the clamping screws
**$Gw_{ub}$** = Weight, unbored

## Ordering example

| Identifier | Size | $d_{1k}$ | $d_{2k}$ | Further details |
|---|---|---|---|---|
| **WS0523-400** | **230** | **105** | **105** | * |

*) Without any other specification, we deliver as a standard: with set screws and keyway acc. to DIN 6885-1, keyway side fit P9, bore tolerance H7

Further information on
**RINGFEDER® TNS S-BT**
on **www.ringfeder.com**

**Disclaimer of liability**
All technical details and notes are non-binding and cannot be used as a basis for legal claims. The user is obligated to determine whether the represented products meet his requirements. We reserve the right carry out modifications at any time in the interests of technical progress.

RINGFEDER POWER TRANSMISSION

# Elastomer Jaw Couplings

# RINGFEDER® TNS SDD-5

## Coupling with detachable claw rings

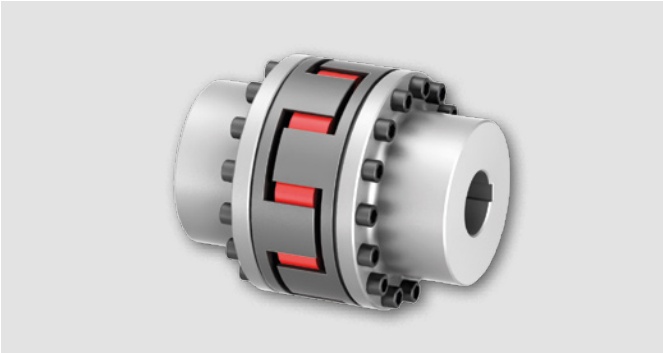

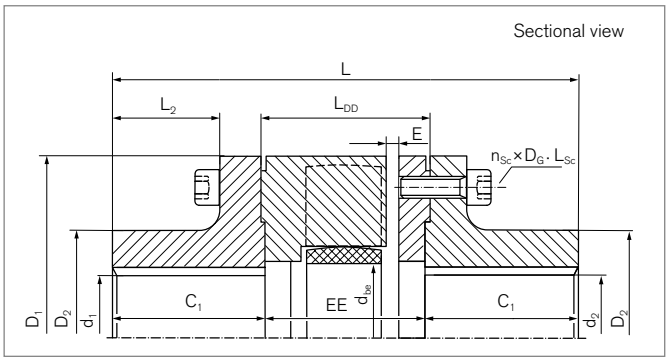


| Identifier | Size | $T_{KN}$ | $T_{Kmax}$ | $n_{max}$ | $d_{1kmax}$ | $d_{2kmax}$ | $D_1$ | $D_2$ | $C_1$ | L | $L_2$ |
|---|---|---|---|---|---|---|---|---|---|---|---|
| | | Nm | Nm | 1/min | mm | mm | mm | mm | mm | mm | mm |
| WS0710 | 100 | 130 | 390 | 7250 | 45 | 45 | 105 | 65 | 49 | 150 | 37,5 |
| WS0712 | 125 | 250 | 750 | 6000 | 55 | 55 | 126 | 80 | 56 | 170 | 42,5 |
| WS0714 | 145 | 400 | 1200 | 5250 | 65 | 65 | 145 | 92 | 60,5 | 189 | 44 |
| WS0717 | 170 | 630 | 1900 | 4500 | 75 | 75 | 170 | 110 | 74,5 | 217 | 58 |
| WS0720 | 200 | 1100 | 3300 | 3750 | 95 | 95 | 200 | 135 | 98,5 | 274 | 82 |
| WS0723 | 230 | 1700 | 5150 | 3250 | 110 | 110 | 230 | 160 | 110 | 301 | 90 |
| WS0726 | 260 | 2650 | 7950 | 3000 | 125 | 125 | 260 | 180 | 112,5 | 321 | 88 |
| WS0730 | 300 | 3900 | 11700 | 2500 | 140 | 140 | 300 | 200 | 131,5 | 376 | 105 |
| WS0736 | 360 | 6500 | 19500 | 2150 | 160 | 160 | 360 | 225 | 172 | 469 | 142,5 |
| WS0740 | 400 | 8900 | 26700 | 1900 | 160 | 160 | 400 | 225 | 172 | 469 | 142,5 |

| Identifier | Size | $L_{DD}$ | E | $F_E$ | EE | $d_{be}$ | Screws ISO 4762 - 8.8 | | | | $Gw_{ub}$ |
|---|---|---|---|---|---|---|---|---|---|---|---|
| | | | | | | | $n_{Sc}$ | $D_G$ | $L_{Sc}$ | $T_A$ | |
| | | mm | mm | mm | mm | mm | | mm | mm | Nm | kg |
| WS0710 | 100 | 55 | 5 | + 2,0 | 52 | 42 | 9 | 8 | 20 | 25 | 5,3 |
| WS0712 | 125 | 61 | 5 | + 2,5 | 58 | 54 | 9 | 10 | 25 | 49 | 8,8 |
| WS0714 | 145 | 71 | 5 | + 2,5 | 68 | 66 | 9 | 12 | 30 | 85 | 13,3 |
| WS0717 | 170 | 71 | 5 | + 3,0 | 68 | 90 | 12 | 12 | 30 | 85 | 19,9 |
| WS0720 | 200 | 81 | 6 | + 3,0 | 77 | 100 | 12 | 14 | 30 | 135 | 35,3 |
| WS0723 | 230 | 86 | 7 | + 3,5 | 81 | 115 | 15 | 14 | 35 | 135 | 52,5 |
| WS0726 | 260 | 101 | 8 | + 4,0 | 96 | 150 | 15 | 16 | 40 | 210 | 71,5 |
| WS0730 | 300 | 118 | 8 | + 4,0 | 113 | 162 | 15 | 20 | 50 | 425 | 109,0 |
| WS0736 | 360 | 130 | 8 | + 4,0 | 125 | 215 | 12 | 24 | 55 | 730 | 179,8 |
| WS0740 | 400 | 130 | 8 | + 4,0 | 125 | 250 | 14 | 24 | 55 | 730 | 197,7 |

For further information see chapter „Introduction“ as well as chapter „Elastomer Jaw Couplings RINGFEDER® TNS Basic information“ in the Product Paper & Tech Paper „RINGFEDER® Elastomer Jaw Couplings“

To continue see next page

# Elastomer Jaw Couplings RINGFEDER® TNS SDD-5

## Explanation

| | | | | | |
|---|---|---|---|---|---|
| $T_{KN}$ | = Nom. Transmissible torque | $D_2$ | = Outer diameter hub | $d_{be}$ | = Inner diameter elastic intermediate ring |
| $T_{Kmax}$ | = Max. transmissible torque of the coupling | $C_1$ | = Guided length in hub bore | $n_{Sc}$ | = Quantity of screws |
| $n_{max}$ | = Max. rotation speed | L | = Total length | $D_G$ | = Thread |
| $d_{1kmax}$ | = Max. bore diameter $d_1$ with keyway acc. to DIN 6885-1 | $L_2$ | = Length on the hub | $L_{Sc}$ | = Screw length |
| $d_{2kmax}$ | = Max. bore diameter $d_2$ with keyway acc. to DIN 6885-1 | $L_{DD}$ | = Distance dimension | $F_{Sc}$ | = Screw strength class |
| $D_1$ | = Outer diameter | E | = Gap width between left and right component | $T_A$ | = Max tightened torque of the clamping screws |
| | | $F_E$ | = Tolerance of the gap width E | $Gw_{ub}$ | = Weight, unbored |
| | | EE | = Distance of the hubs | | |

## Ordering example

| Identifier | Size | $d_{1k}$ | $d_{2k}$ | Further details |
|---|---|---|---|---|
| WS0723 | 230 | 110 | 110 | * |

*) Without any other specification, we deliver as a standard: with set screws and keyway acc. to DIN 6885-1, keyway side fit P9, bore tolerance H7

Further information on
**RINGFEDER® TNS SDD-5**
on **www.ringfeder.com**

**Disclaimer of liability**
All technical details and notes are non-binding and cannot be used as a basis for legal claims. The user is obligated to determine whether the represented products meet his requirements. We reserve the right carry out modifications at any time in the interests of technical progress.

# Elastomer Jaw Couplings

# RINGFEDER® TNS SDDL-5

## Coupling with detachable claw rings and long flange hubs

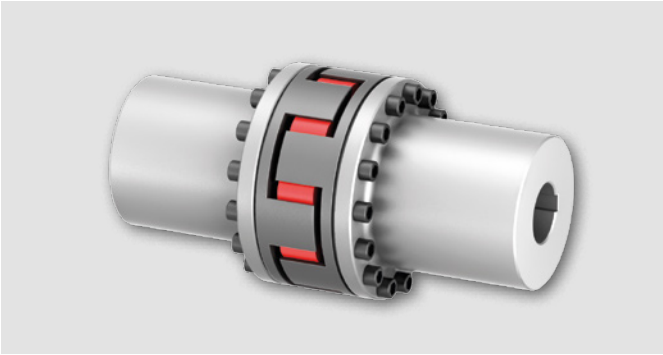

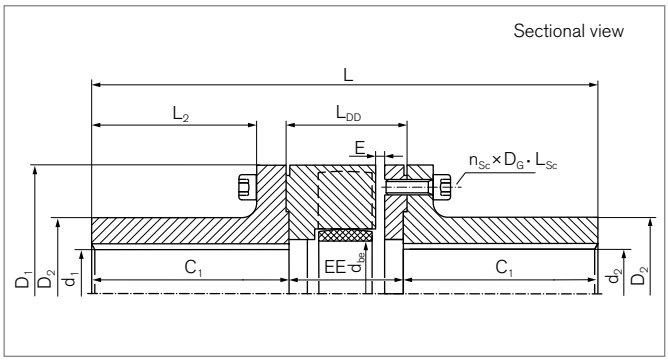


| Identifier | Size | $T_{KN}$ | $T_{Kmax}$ | $n_{max}$ | $d_{1kmax}$ | $d_{2kmax}$ | $D_1$ | $D_2$ | $C_1$ | L | $L_2$ |
|---|---|---|---|---|---|---|---|---|---|---|---|
| | | Nm | Nm | 1/min | mm | mm | mm | mm | mm | mm | mm |
| WS0710-L | 100 | 130 | 390 | 7250 | 45 | 45 | 105 | 65 | 110 | 272 | 98,5 |
| WS0712-L | 125 | 250 | 750 | 6000 | 55 | 55 | 126 | 80 | 110 | 278 | 96,5 |
| WS0714-L | 145 | 400 | 1200 | 5250 | 65 | 65 | 145 | 92 | 110 | 288 | 93,5 |
| WS0717-L | 170 | 630 | 1900 | 4500 | 75 | 75 | 170 | 110 | 140 | 348 | 123,5 |
| WS0720-L | 200 | 1100 | 3300 | 3750 | 95 | 95 | 200 | 135 | 170 | 417 | 153,5 |
| WS0723-L | 230 | 1700 | 5150 | 3250 | 110 | 110 | 230 | 160 | 170 | 421 | 150 |
| WS0726-L | 260 | 2650 | 7950 | 3000 | 125 | 125 | 260 | 180 | 210 | 516 | 185,5 |
| WS0730-L | 300 | 3900 | 11700 | 2500 | 140 | 140 | 300 | 200 | 210 | 533 | 183,5 |
| WS0736-L | 360 | 6500 | 19500 | 2150 | 160 | 160 | 360 | 225 | 250 | 625 | 220,5 |
| WS0740-L | 400 | 8900 | 26700 | 1900 | 160 | 160 | 400 | 225 | 250 | 625 | 220,5 |

| Identifier | Size | $L_{DD}$ | E | $F_E$ | EE | $d_{be}$ | Screws ISO 4762 - 8.8 | | | | $Gw_{ub}$ |
|---|---|---|---|---|---|---|---|---|---|---|---|
| | | | | | | | $n_{Sc}$ | $D_G$ | $L_{Sc}$ | $T_A$ | |
| | | mm | mm | mm | mm | mm | | mm | mm | Nm | kg |
| WS0710-L | 100 | 55 | 5 | + 2,0 | 52 | 42 | 9 | 8 | 20 | 25 | 8,5 |
| WS0712-L | 125 | 61 | 5 | + 2,5 | 58 | 54 | 9 | 10 | 25 | 49 | 13,1 |
| WS0714-L | 145 | 71 | 5 | + 2,5 | 68 | 66 | 9 | 12 | 30 | 85 | 18,5 |
| WS0717-L | 170 | 71 | 5 | + 3,0 | 68 | 90 | 12 | 12 | 30 | 85 | 29,7 |
| WS0720-L | 200 | 81 | 6 | + 3,0 | 77 | 100 | 12 | 14 | 30 | 135 | 51,3 |
| WS0723-L | 230 | 86 | 7 | + 3,5 | 81 | 115 | 15 | 14 | 35 | 135 | 71,4 |
| WS0726-L | 260 | 101 | 8 | + 4,0 | 96 | 150 | 15 | 16 | 40 | 210 | 110,5 |
| WS0730-L | 300 | 118 | 8 | + 4,0 | 113 | 162 | 15 | 20 | 50 | 425 | 147,8 |
| WS0736-L | 360 | 130 | 8 | + 4,0 | 125 | 215 | 12 | 24 | 55 | 730 | 228,5 |
| WS0740-L | 400 | 130 | 8 | + 4,0 | 125 | 250 | 14 | 24 | 55 | 730 | 246,3 |

For further information see chapter „Introduction“ as well as chapter „Elastomer Jaw Couplings RINGFEDER® TNS Basic information“ in the Product Paper & Tech Paper „RINGFEDER® Elastomer Jaw Couplings“

To continue see next page

# Elastomer Jaw Couplings RINGFEDER® TNS SDDL-5

## Explanation

| | | | | | |
|---|---|---|---|---|---|
| $T_{KN}$ | = Nom. Transmissible torque | $D_2$ | = Outer diameter hub | $d_{be}$ | = Inner diameter elastic intermediate ring |
| $T_{Kmax}$ | = Max. transmissible torque of the coupling | $C_1$ | = Guided length in hub bore | $n_{Sc}$ | = Quantity of screws |
| $n_{max}$ | = Max. rotation speed | L | = Total length | $D_G$ | = Thread |
| $d_{1kmax}$ | = Max. bore diameter $d_1$ with keyway acc. to DIN 6885-1 | $L_2$ | = Length on the hub | $L_{Sc}$ | = Screw length |
| $d_{2kmax}$ | = Max. bore diameter $d_2$ with keyway acc. to DIN 6885-1 | $L_{DD}$ | = Distance dimension | $F_{Sc}$ | = Screw strength class |
| $D_1$ | = Outer diameter | E | = Gap width between left and right component | $T_A$ | = Max tightened torque of the clamping screws |
| | | $F_E$ | = Tolerance of the gap width E | $Gw_{ub}$ | = Weight, unbored |
| | | EE | = Distance of the hubs | | |

## Ordering example

| Identifier | Size | $d_{1k}$ | $d_{2k}$ | Further details |
|---|---|---|---|---|
| WS0726-L | 260 | 125 | 125 | * |

*) Without any other specification, we deliver as a standard: with set screws and keyway acc. to DIN 6885-1, keyway side fit P9, bore tolerance H7

Further information on
**RINGFEDER® TNS SDDL-5**
on **www.ringfeder.com**

**Disclaimer of liability**
All technical details and notes are non-binding and cannot be used as a basis for legal claims. The user is obligated to determine whether the represented products meet his requirements. We reserve the right carry out modifications at any time in the interests of technical progress.

# Elastomer Jaw Couplings

# RINGFEDER® TNS SDDL-5-BS

## Coupling with detachable claw rings, long hubs and brake disc

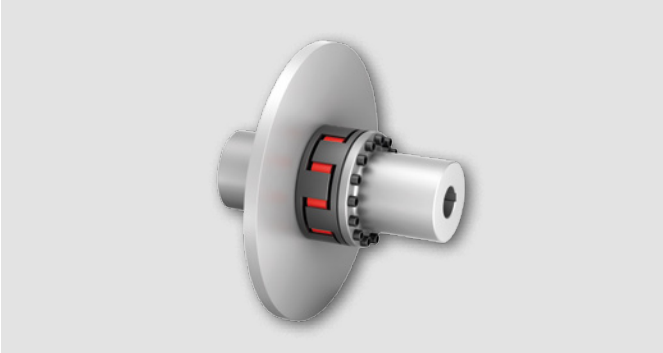

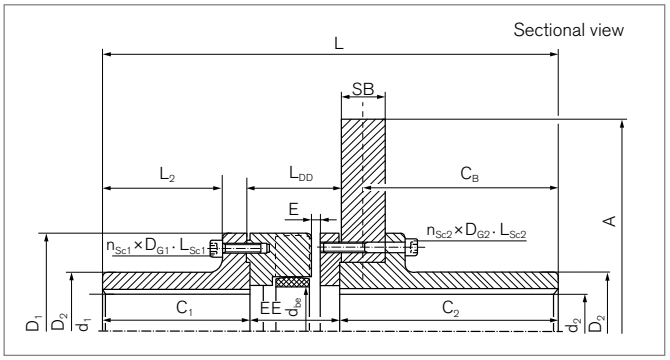


| Identifier | Size | A | SB | $T_{KN\ Vk60D}$ | $T_{Kmax\ Vk60D}$ | $n_{max}$ | $d_{1kmax}$ | $d_{2kmax}$ | $D_1$ | $D_2$ | $C_1$ | $C_2$ | $C_B$ | L | $L_2$ |
|---|---|---|---|---|---|---|---|---|---|---|---|---|---|---|---|
| | | mm | mm | Nm | Nm | 1/min | mm | mm | mm | mm | mm | mm | mm | mm | mm |
| WS5114-0355-30 | 145 | 355 | 30 | 600 | 1800 | 4800 | 65 | 65 | 145 | 92 | 110 | 166,5 | 150 | 344,5 | 93,5 |
| WS5114-0400-30 | | 400 | 30 | | | 4300 | | 65 | | | | | 150 | 344,5 | |
| WS5117-0400-30 | 170 | 400 | 30 | 950 | 2850 | 4300 | 75 | 75 | 170 | 110 | 140 | 166,5 | 150 | 374,5 | 123,5 |
| WS5117-0450-30 | | 450 | 30 | | | 3750 | | 75 | | | | | 150 | 374,5 | |
| WS5117-0500-30 | | 500 | 30 | | | 3400 | | 75 | | | | | 150 | 374,5 | |
| WS5120-0450-30 | 200 | 450 | 30 | 1650 | 4950 | 3750 | 95 | 95 | 200 | 135 | 170 | 207 | 190 | 454 | 153,5 |
| WS5120-0500-30 | | 500 | 30 | | | 3400 | | 95 | | | | | 190 | 454 | |
| WS5120-0560-30 | | 560 | 30 | | | 3000 | | 95 | | | | | 190 | 454 | |
| WS5123-0500-30 | 230 | 500 | 30 | 2580 | 7740 | 3250 | 110 | 110 | 230 | 160 | 170 | 207,5 | 190 | 458,5 | 150 |
| WS5123-0560-30 | | 560 | 30 | | | 3000 | | 110 | | | | | 190 | 458,5 | |
| WS5123-0630-30 | | 630 | 30 | | | 2700 | | 110 | | | | | 190 | 458,5 | |
| WS5123-0710-30 | | 710 | 30 | | | 2400 | | 110 | | | | | 190 | 458,5 | |
| WS5126-0630-30 | 260 | 630 | 30 | 3980 | 11940 | 2700 | 125 | 125 | 260 | 180 | 210 | 212,5 | 195 | 518,5 | 185,5 |
| WS5126-0710-30 | | 710 | 30 | | | 2400 | | 125 | | | | | 195 | 518,5 | |
| WS5130-0710-30 | 300 | 710 | 30 | 5850 | 17550 | 2400 | 140 | 140 | 300 | 200 | 210 | 212,5 | 195 | 535,5 | 183,5 |
| WS5130-0800-30 | | 800 | 30 | | | 2150 | | 140 | | | | | 195 | 535,5 | |
| WS5130-0800-40 | | 800 | 40 | | | 2150 | | 140 | | | | | 190 | 535,5 | |
| WS5136-0800-30 | 360 | 800 | 30 | 9700 | 29100 | 2150 | 160 | 160 | 360 | 225 | 250 | 252,5 | 235 | 627,5 | 220,5 |
| WS5136-0800-40 | | 800 | 40 | | | 2150 | | 160 | | | | | 230 | 627,5 | |
| WS5136-1000-40 | | 1000 | 40 | | | 1700 | | 160 | | | | | 230 | 627,5 | |
| WS5140-0800-30 | 400 | 800 | 30 | 13350 | 40050 | 1900 | 160 | 160 | 400 | 225 | 250 | 252,5 | 235 | 627,5 | 220,5 |
| WS5140-0800-40 | | 800 | 40 | | | 1900 | | 160 | | | | | 230 | 627,5 | |
| WS5140-1000-40 | | 1000 | 40 | | | 1700 | | 160 | | | | | 230 | 627,5 | |

For further information see chapter „Introduction“ as well as chapter „Elastomer Jaw Couplings RINGFEDER® TNS Basic information“ in the Product Paper & Tech Paper „RINGFEDER® Elastomer Jaw Couplings“

To continue see next page

## Elastomer Jaw Couplings RINGFEDER® TNS SDDL-5-BS

| Identifier | Size | $L_{DD}$ | E | $F_E$ | EE | $d_{be}$ | Screws ISO 4762 - 8.8 | | | | | | | | $Gw_{ub}$ |
|---|---|---|---|---|---|---|---|---|---|---|---|---|---|---|---|
| | | | | | | | $n_{Sc1}$ | $D_{G1}$ | $L_{Sc1}$ | $T_{A1}$ | $n_{Sc2}$ | $D_{G2}$ | $L_{Sc2}$ | $T_{A2}$ | |
| | | mm | mm | mm | mm | mm | | mm | mm | Nm | | mm | mm | Nm | kg |
| WS5114-0355-30 | 145 | 71 | 5 | + 2,5 | 68 | 66 | 9 | M12 | 30 | 85 | 9 | M12 | 60 | 85 | 43,0 |
| WS5114-0400-30 | | | | | 68 | | | | | | 9 | M12 | 60 | 85 | 49,3 |
| WS5117-0400-30 | 170 | 71 | 5 | + 3,0 | 68 | 90 | 12 | M12 | 30 | 85 | 12 | M12 | 70 | 85 | 59,9 |
| WS5117-0450-30 | | | | | 68 | | | | | | 12 | M12 | 70 | 85 | 67,7 |
| WS5117-0500-30 | | | | | 68 | | | | | | 12 | M12 | 70 | 85 | 76,5 |
| WS5120-0450-30 | 200 | 81 | 6 | + 3,0 | 77 | 100 | 12 | M14 | 30 | 135 | 12 | M14 | 60 | 135 | 59,9 |
| WS5120-0500-30 | | | | | 77 | | | | | | 12 | M14 | 60 | 135 | 98,1 |
| WS5120-0560-30 | | | | | 77 | | | | | | 12 | M14 | 60 | 135 | 109,9 |
| WS5123-0500-30 | 230 | 86 | 7 | + 3,5 | 81 | 115 | 15 | M14 | 35 | 135 | 15 | M14 | 65 | 135 | 118,6 |
| WS5123-0560-30 | | | | | 81 | | | | | | 15 | M14 | 65 | 135 | 130,3 |
| WS5123-0630-30 | | | | | 81 | | | | | | 15 | M14 | 65 | 135 | 145,8 |
| WS5123-0710-30 | | | | | 81 | | | | | | 15 | M14 | 65 | 135 | 165,6 |
| WS5126-0630-30 | 260 | 101 | 8 | + 4,0 | 96 | 150 | 15 | M16 | 40 | 210 | 15 | M16 | 70 | 210 | 178,1 |
| WS5126-0710-30 | | | | | 96 | | | | | | 15 | M16 | 70 | 210 | 198,0 |
| WS5130-0710-30 | 300 | 118 | 8 | + 4,0 | 113 | 162 | 15 | M20 | 50 | 425 | 15 | M20 | 80 | 425 | 233,7 |
| WS5130-0800-30 | | | | | 113 | | | | | | 15 | M20 | 80 | 425 | 258,8 |
| WS5130-0800-40 | | | | | 113 | | | | | | 15 | M20 | 90 | 425 | 295,7 |
| WS5136-0800-30 | 360 | 130 | 8 | + 4,0 | 125 | 215 | 12 | M24 | 55 | 730 | 12 | M24 | 85 | 730 | 337,7 |
| WS5136-0800-40 | | | | | 125 | | | | | | 12 | M24 | 95 | 730 | 374,0 |
| WS5136-1000-40 | | | | | 125 | | | | | | 12 | M24 | 95 | 730 | 462,7 |
| WS5140-0800-30 | 400 | 130 | 8 | + 4,0 | 125 | 250 | 14 | M24 | 55 | 730 | 14 | M24 | 85 | 730 | 355,5 |
| WS5140-0800-40 | | | | | 125 | | | | | | 14 | M24 | 95 | 730 | 391,8 |
| WS5140-1000-40 | | | | | 125 | | | | | | 14 | M24 | 95 | 730 | 480,5 |

To continue see next page

# Elastomer Jaw Couplings RINGFEDER® TNS SDDL-5-BS

## Explanation

| | | | | | |
|---|---|---|---|---|---|
| **A** | = Max. outer diameter | **$D_2$** | = Outer diameter hub | **$d_{be}$** | = Inner diameter elastic intermediate ring |
| **SB** | = Disc width | **$C_1$** | = Guided length in hub bore | **$n_{Sc1}$** | = Quantity of screws $D_{G1}$ |
| **$T_{KN\ Vk60D}$** | = Nom. coupling torque when using the flexible element VK60D | **$C_2$** | = Guided length in hub bore | **$D_{G1}$** | = Thread |
| **$T_{Kmax\ Vk60D}$** | = Max. transmittable torque of the coupling when using the flexible element VK60D | **$C_B$** | = Brake disc distance | **$L_{Sc1}$** | = Length of screw $D_{G1}$ |
| **$n_{max}$** | = Max. rotation speed | **L** | = Total length | **$T_{A1}$** | = Tightened torque of clamping screw $D_{G1}$ |
| **$d_{1kmax}$** | = Max. bore diameter $d_1$ with keyway acc. to DIN 6885-1 | **$L_2$** | = Length on the hub | **$n_{Sc2}$** | = Quantity of screws $D_{G2}$ |
| **$d_{2kmax}$** | = Max. bore diameter $d_2$ with keyway acc. to DIN 6885-1 | **$L_{DD}$** | = Distance dimension | **$D_{G2}$** | = Thread |
| **$D_1$** | = Outer diameter | **E** | = Gap width between left and right component | **$L_{Sc2}$** | = Length of screw $D_{G2}$ |
| | | **$F_E$** | = Tolerance of the gap width E | **$T_{A2}$** | = Tightened torque of clamping screw $D_{G2}$ |
| | | **EE** | = Distance of the hubs | **$F_{Sc}$** | = Screw strength class |
| | | | | **$Gw_{ub}$** | = Weight, unbored |

## Ordering example

| Identifier | Size | $d_{1k}$ | $d_{2k}$ | Further details |
|---|---|---|---|---|
| WS5120-0450-30 | 200 | 95 | 95 | * |

*) Without any other specification, we deliver as a standard: with set screws and keyway acc. to DIN 6885-1, keyway side fit P9, bore tolerance H7

Further information on
**RINGFEDER® TNS SDDL-5-BS**
on **www.ringfeder.com**

**Disclaimer of liability**
All technical details and notes are non-binding and cannot be used as a basis for legal claims. The user is obligated to determine whether the represented products meet his requirements. We reserve the right carry out modifications at any time in the interests of technical progress.

# Elastomer Jaw Couplings
# RINGFEDER® TNS SX
## Coupling with standard hub and claw flange

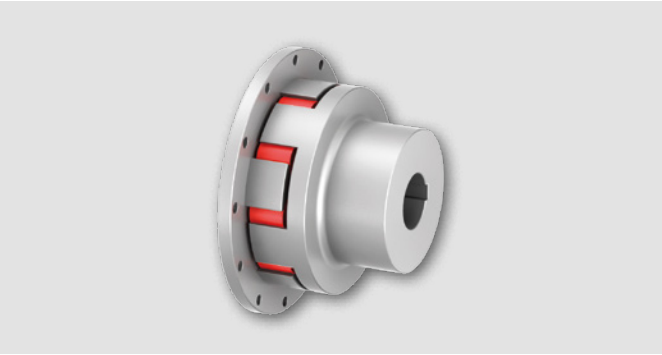

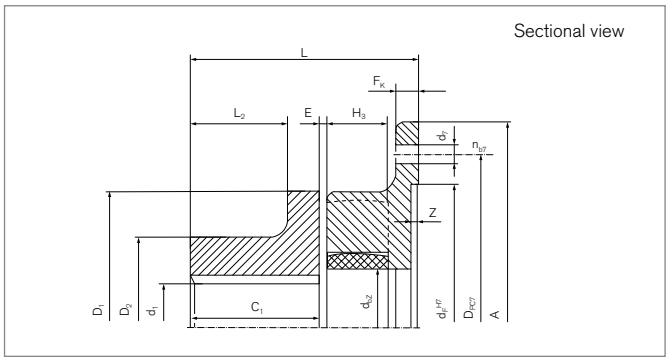


| Identifier | Size | $T_{KN}$ | $T_{Kmax}$ | $n_{max}$ | $d_{1kmax}$ | A | $D_1$ | $D_2$ | $C_1$ | $F_K$ |
|---|---|---|---|---|---|---|---|---|---|---|
| | | Nm | Nm | 1/min | mm | mm | mm | mm | mm | mm |
| WS1010 | 100 | 70 | 210 | 7250 | 48 | 145 | 105 | 75 | 49,5 | 10 |
| WS1012 | 125 | 128 | 385 | 6000 | 55 | 170 | 126 | 85 | 56,5 | 10 |
| WS1014 | 145 | 220 | 660 | 5250 | 65 | 194 | 145 | 95 | 61 | 12 |
| WS1017 | 170 | 340 | 1020 | 4500 | 85 | 220 | 170 | 120 | 75 | 14 |
| WS1020 | 200 | 590 | 1770 | 3750 | 95 | 250 | 200 | 135 | 99 | 14 |
| WS1023 | 230 | 900 | 2700 | 3250 | 105 | 290 | 230 | 150 | 110 | 14 |
| WS1026 | 260 | 1400 | 4200 | 3000 | 125 | 335 | 260 | 180 | 112,5 | 18 |
| WS1030 | 300 | 2090 | 6270 | 2500 | 140 | 385 | 300 | 200 | 131,5 | 24 |
| WS1036-0650 | 360 | 3450 | 10350 | 2150 | 150 | 455 | 360 | 210 | 172 | 28 |
| WS1036-0750 | | 3450 | | | | 514 | | | | 30 |
| WS1040 | 400 | 4750 | 14250 | 1900 | 160 | 514 | 400 | 225 | 163,5 | 30 |
| WS1040-0866 | | 4750 | | | | 595 | | | | 30 |
| WS1040-L | 400-L | 4750 | 14250 | 1900 | 160 | 514 | 400 | 225 | 183,5 | 30 |
| WS1040-L-0866 | | 4750 | | | | 595 | | | | 30 |

For further information see chapter „Introduction“ as well as chapter „Elastomer Jaw Couplings RINGFEDER® TNS Basic information“ in the Product Paper & Tech Paper „RINGFEDER® Elastomer Jaw Couplings“

To continue see next page

## Elastomer Jaw Couplings RINGFEDER® TNS SX

| Identifier | Size | Z | $d_F$ | $D_{PC7}$ | $n_{b7}$ | $d_7$ | L | $L_2$ | E | $H_3$ | $d_{be}$ | $Gw_{ub}$ |
|---|---|---|---|---|---|---|---|---|---|---|---|---|
| | | mm | mm | mm | | mm | mm | mm | mm | mm | mm | kg |
| WS1010 | 100 | 2 | 100 | 128 | 6 | 9 | 84,5 | 37,5 | 3 | 20 | 42 | 2,9 |
| WS1012 | 125 | 2 | 130 | 148 | 6 | 9 | 97 | 44 | 3,5 | 25 | 54 | 4,5 |
| WS1014 | 145 | 4 | 150 | 172 | 6 | 9 | 109 | 47,5 | 4 | 30 | 66 | 6,4 |
| WS1017 | 170 | 4 | 170 | 195 | 6 | 13,5 | 126,5 | 60,5 | 5 | 30 | 90 | 10,4 |
| WS1020 | 200 | 4 | 195 | 228 | 8 | 13,5 | 156,5 | 79,5 | 6 | 35 | 100 | 17,5 |
| WS1023 | 230 | 4 | 220 | 265 | 8 | 13,5 | 171 | 88,5 | 7 | 35 | 115 | 24,4 |
| WS1026 | 260 | 4 | 265 | 310 | 12 | 13,5 | 188 | 88,5 | 7 | 45 | 150 | 35,9 |
| WS1030 | 300 | 4 | 315 | 360 | 16 | 13,5 | 218,5 | 107,5 | 7 | 50 | 162 | 53,2 |
| WS1036-0650 | 360 | 5 | 360 | 420 | 16 | 17,5 | 271,5 | 140 | 8 | 55 | 215 | 84,4 |
| WS1036-0750 | | 5 | 420 | 480 | 20 | 17,5 | 273,5 | | | | | 84,4 |
| WS1040 | 400 | 5 | 420 | 480 | 20 | 17,5 | 265 | 137 | 7,5 | 55 | 250 | 94,6 |
| WS1040-0866 | | 6 | 485 | 555 | 12 | 22 | 265 | | | | | 99,2 |
| WS1040-L | 400-L | 5 | 420 | 480 | 20 | 17,5 | 285 | 157 | 7,5 | 55 | 250 | 100,9 |
| WS1040-L-0866 | | 6 | 485 | 555 | 12 | 22 | 285 | | | | | 105,5 |

## Explanation

$T_{KN}$ = Nom. Transmissible torque

$T_{Kmax}$ = Max. transmissible torque of the coupling

$n_{max}$ = Max. rotation speed

$d_{1kmax}$ = Max. bore diameter $d_1$ with keyway acc. to DIN 6885-1

A = Max. outer diameter

$D_1$ = Outer diameter

$D_2$ = Outer diameter hub

$C_1$ = Guided length in hub bore

$F_K$ = Flange thickness

Z = Depth of center value

$d_F$ = Center diameter

$D_{PC7}$ = Pitch circle diameter of bore holes $d_7$

$n_{b7}$ = Quantity of bore $d_7$

$d_7$ = Bore diameter

L = Total length

$L_2$ = Length on the hub

E = Gap width between left and right component

$H_3$ = Length of damping module

$d_{be}$ = Inner diameter elastic intermediate ring

$Gw_{ub}$ = Weight, unbored

## Ordering example

| Identifier | Size | $d_{1k}$ | Further details |
|---|---|---|---|
| **WS1036-0750** | **360** | **150** | * |

*) Without any other specification, we deliver as a standard: with set screws and keyway acc. to DIN 6885-1, keyway side fit P9, bore tolerance H7

Further information on
**RINGFEDER® TNS SX**
on **www.ringfeder.com**

**Disclaimer of liability**
All technical details and notes are non-binding and cannot be used as a basis for legal claims. The user is obligated to determine whether the represented products meet his requirements. We reserve the right carry out modifications at any time in the interests of technical progress.

RINGFEDER POWER TRANSMISSION

# Elastomer Jaw Couplings
# RINGFEDER® TNS SV
## Coupling with inner hub and claw flange

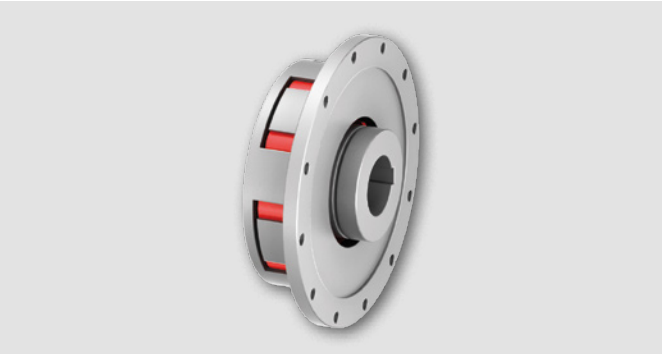

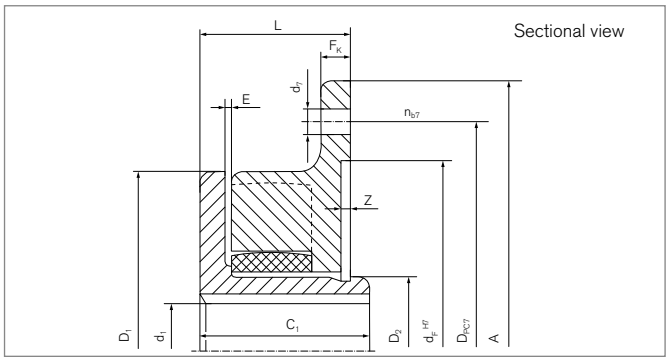


| Identifier | Size | $T_{KN}$ | $T_{Kmax}$ | $n_{max}$ | $d_{1kmax}$ | A | $D_1$ | $D_2$ | $C_1$ | $F_K$ |
|---|---|---|---|---|---|---|---|---|---|---|
| | | Nm | Nm | 1/min | mm | mm | mm | mm | mm | mm |
| WS1410 | 100 | 70 | 210 | 7250 | 27 | 145 | 105 | 38 | 50 | 10 |
| WS1412 | 125 | 128 | 385 | 6000 | 34 | 170 | 126 | 48 | 57 | 10 |
| WS1414 | 145 | 220 | 660 | 5250 | 42 | 194 | 145 | 60 | 65 | 12 |
| WS1417 | 170 | 340 | 1020 | 4500 | 58 | 220 | 170 | 82 | 75 | 14 |
| WS1420 | 200 | 590 | 1770 | 3750 | 65 | 250 | 200 | 95 | 85 | 14 |
| WS1423 | 230 | 900 | 2700 | 3250 | 70 | 290 | 230 | 102 | 90 | 14 |
| WS1426 | 260 | 1400 | 4200 | 3000 | 90 | 335 | 260 | 130 | 110 | 18 |
| WS1430 | 300 | 2090 | 6270 | 2500 | 105 | 385 | 300 | 147 | 130 | 24 |
| WS1436-0650 | 360 | 3450 | 10350 | 2150 | 140 | 455 | 360 | 210 | 175 | 28 |
| WS1436-0750 | | 3450 | | | | 514 | | | | 30 |
| WS1440 | 400 | 4750 | 14250 | 1900 | 160 | 514 | 400 | 230 | 180 | 30 |
| WS1440-0866 | | 4750 | | | | 595 | | | | 30 |

For further information see chapter „Introduction“ as well as chapter „Elastomer Jaw Couplings RINGFEDER® TNS Basic information“ in the Product Paper & Tech Paper „RINGFEDER® Elastomer Jaw Couplings“

To continue see next page

## Elastomer Jaw Couplings RINGFEDER® TNS SV

| Identifier | Size | Z | $d_F$ | $D_{PC7}$ | $n_{b7}$ | $d_7$ | L | E | $d_{be}$ | $Gw_{ub}$ |
|---|---|---|---|---|---|---|---|---|---|---|
| | | mm | mm | mm | | mm | mm | mm | mm | kg |
| WS1410 | 100 | 2 | 100 | 128 | 6 | 9 | 42 | 2 | 42 | 1,7 |
| WS1412 | 125 | 2 | 130 | 148 | 6 | 9 | 47 | 2 | 54 | 2,8 |
| WS1414 | 145 | 4 | 150 | 172 | 6 | 9 | 55 | 2 | 66 | 4,3 |
| WS1417 | 170 | 4 | 170 | 195 | 6 | 13,5 | 60 | 2,5 | 90 | 6,8 |
| WS1420 | 200 | 4 | 195 | 228 | 8 | 13,5 | 65 | 2,5 | 100 | 10,4 |
| WS1423 | 230 | 4 | 220 | 265 | 8 | 13,5 | 70 | 4,5 | 115 | 13,4 |
| WS1426 | 260 | 4 | 265 | 310 | 12 | 13,5 | 85,5 | 4,5 | 150 | 22,8 |
| WS1430 | 300 | 4 | 315 | 360 | 16 | 13,5 | 100 | 4,5 | 162 | 36,2 |
| WS1436-0650 | 360 | 5 | 360 | 420 | 16 | 17,5 | 123 | 7,5 | 215 | 71,4 |
| WS1436-0750 | | 5 | 420 | 480 | 20 | 17,5 | 125 | | 215 | 75,4 |
| WS1440 | 400 | 5 | 420 | 480 | 20 | 17,5 | 125 | 7,5 | 250 | 94,9 |
| WS1440-0866 | | 6 | 485 | 555 | 12 | 22 | 125 | | 250 | 99,5 |

## Explanation

- $T_{KN}$ = Nom. Transmissible torque
- $T_{Kmax}$ = Max. transmissible torque of the coupling
- $n_{max}$ = Max. rotation speed
- $d_{1kmax}$ = Max. bore diameter $d_1$ with keyway acc. to DIN 6885-1
- A = Max. outer diameter
- $D_1$ = Outer diameter
- $D_2$ = Outer diameter hub
- $C_1$ = Guided length in hub bore
- $F_K$ = Guided length in hub bore
- Z = Depth of center value
- $d_F$ = Center diameter
- $D_{PC7}$ = Pitch circle diameter of bore holes $d_7$
- $n_{b7}$ = Quantity of bore $d_7$
- $d_7$ = Bore diameter
- L = Total length
- E = Gap width between left and right component
- $d_{be}$ = Inner diameter elastic intermediate ring
- $Gw_{ub}$ = Weight, unbored

## Ordering example

| Identifier | Size | $d_{1k}$ | Further details |
|---|---|---|---|
| **WS1436-0750** | **360** | **140** | * |

*) Without any other specification, we deliver as a standard: with set screws and keyway acc. to DIN 6885-1, keyway side fit P9, bore tolerance H7

Further information on
**RINGFEDER® TNS SV**
on **www.ringfeder.com**

**Disclaimer of liability**
All technical details and notes are non-binding and cannot be used as a basis for legal claims. The user is obligated to determine whether the represented products meet his requirements. We reserve the right carry out modifications at any time in the interests of technical progress.

# Elastomer Jaw Couplings
# RINGFEDER® TNB BH

## Combination of one-part design coupling hubs with VkW buffer for highest torque transmission

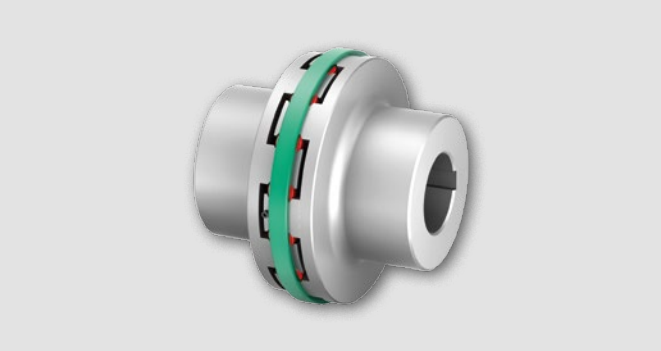

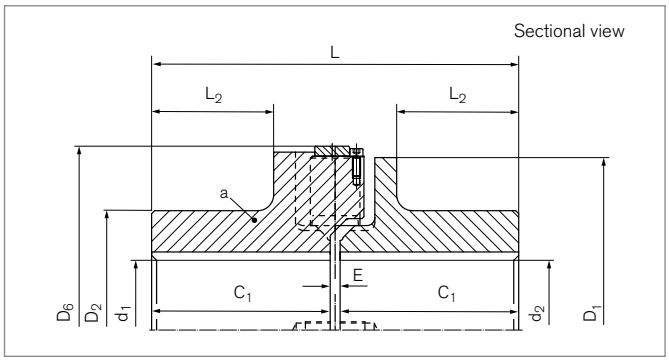


| Identifier | Size | $T_{KN}$ 2) | $n_{max}$ | $d_{1kmax}$ | $d_{2kmax}$ | $D_1$ | $D_2$ | $D_6$ |
|---|---|---|---|---|---|---|---|---|
| | | Nm | 1/min | mm | mm | mm | mm | mm |
| WB0130 | 300 | 8600 | 3300 | 135 | 135 | 300 | 210 | 320 |
| WB0135 | 350 | 15000 | 2800 | 160 | 160 | 350 | 240 | 370 |
| WB0140 | 400 | 23000 | 2450 | 180 | 180 | 400 | 270 | 420 |
| WB0145 | 450 | 31000 | 2200 | 200 | 200 | 450 | 300 | 470 |
| WB0150 | 500 | 41200 | 2000 | 220 | 220 | 500 | 330 | 530 |
| WB0155 | 550 | 66000 | 1800 | 240 | 240 | 550 | 350 | 580 |
| WB0160 | 600 | 80000 | 1650 | 250 | 250 | 600 | 375 | 630 |
| WB0165 | 650 | 94000 | 1500 | 260 | 260 | 650 | 400 | 680 |
| WB0170 | 700 | 130000 | 1400 | 300 | 300 | 700 | 450 | 740 |
| WB0180 | 800 | 180000 | 1200 | 330 | 330 | 800 | 490 | 840 |
| WB0190 | 900 | 260000 | 1100 | 360 | 360 | 900 | 540 | 940 |

| Identifier | Size | $C_1$ | L | $L_2$ | E | Gwa 1) | $Gw_{ub}$ |
|---|---|---|---|---|---|---|---|
| | | mm | mm | mm | mm | kg | kg |
| WB0130 | 300 | 160 | 330 | 103 | 10 | 51 | 101 |
| WB0135 | 350 | 180 | 370 | 123 | 10 | 74 | 145 |
| WB0140 | 400 | 198 | 406 | 134 | 10 | 107 | 210 |
| WB0145 | 450 | 218 | 446 | 154 | 10 | 141 | 275 |
| WB0150 | 500 | 236,5 | 487 | 163,5 | 14 | 188 | 371 |
| WB0155 | 550 | 256,5 | 527 | 183,5 | 14 | 234 | 456 |
| WB0160 | 600 | 258 | 530 | 180 | 14 | 286 | 565 |
| WB0165 | 650 | 286,5 | 587 | 202,5 | 14 | 359 | 705 |
| WB0170 | 700 | 327 | 668 | 234 | 14 | 496 | 985 |
| WB0180 | 800 | 357 | 728 | 264 | 14 | 653 | 1285 |
| WB0190 | 900 | 407 | 828 | 307 | 14 | 908 | 1790 |

1) Mass information for unbored coupling parts
2) Attention on peak load. See chapter „Elastomer Jaw Couplings RINGFEDER® TNB Basic information“ in Product Paper & Tech Paper „RINGFEDER® Elastomer Jaw Couplings“

To continue see next page

# Elastomer Jaw Couplings RINGFEDER® TNB BH

## Explanation

| | | | | | |
|---|---|---|---|---|---|
| $T_{KN}$ | = Nom. Transmissible torque | $D_1$ | = Outer diameter | E | = Gap width between left and right component |
| $n_{max}$ | = Max. rotation speed | $D_2$ | = Outer diameter hub | Gwa | = Weight of subassembly a |
| $d_{1kmax}$ | = Max. bore diameter $d_1$ with keyway acc. to DIN 6885-1 | $D_6$ | = Diameter | $Gw_{ub}$ | = Weight, unbored |
| $d_{2kmax}$ | = Max. bore diameter $d_2$ with keyway acc. to DIN 6885-1 | $C_1$ | = Guided length in hub bore | | |
| | | L | = Total length | | |
| | | $L_2$ | = Length on the hub | | |

## Ordering example

| Identifier | Size | $d_{1k}$ | $d_{2k}$ | Buffer identifier (optional) [3] | Further details |
|---|---|---|---|---|---|
| WB0155 | 550 | 200 | 180 | Pb82 | * |

[3] If a different buffer shore hardness is selected, the values from the corresponding table must be taken into account. See chapter „Elastomer Jaw Couplings RINGFEDER® TNB Basic information“ in Product Paper & Tech Paper „RINGFEDER® Elastomer Jaw Couplings“

*) Without any other specification, we deliver as a standard: with set screws and keyway acc. to DIN 6885-1, keyway side fit P9, bore tolerance H7

Further information on
**RINGFEDER® TNB BH**
on **www.ringfeder.com**

**Disclaimer of liability**
All technical details and notes are non-binding and cannot be used as a basis for legal claims. The user is obligated to determine whether the represented products meet his requirements. We reserve the right carry out modifications at any time in the interests of technical progress.

# Elastomer Jaw Couplings
# RINGFEDER® TNB BHD

## Combination of an one-part design and a multi-part design coupling hub and VkR buffer

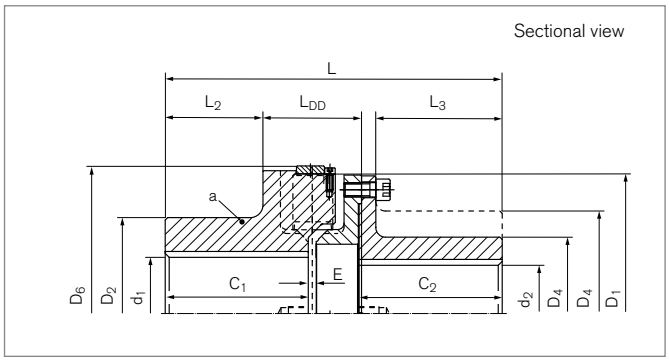


| Identifier | Size | $T_{KN}$ 2) | $n_{max}$ | $d_{1kmax}$ | $d_{2kmax}$ | $D_1$ | $D_2$ | $D_4$ | $D_6$ |
|---|---|---|---|---|---|---|---|---|---|
| | | Nm | 1/min | mm | mm | mm | mm | mm | mm |
| WB0230-A | 300 | 6000 | 3300 | 135 | 110 | 300 | 210 | 170 | 320 |
| WB0230-B | 300 | 6000 | 3300 | 135 | 135 | 300 | 210 | 200 | 320 |
| WB0235-A | 350 | 10500 | 2800 | 160 | 120 | 350 | 240 | 180 | 370 |
| WB0235-B | 350 | 10500 | 2800 | 160 | 170 | 350 | 240 | 250 | 370 |
| WB0240-A | 400 | 16000 | 2450 | 180 | 140 | 400 | 270 | 210 | 420 |
| WB0240-B | 400 | 16000 | 2450 | 180 | 190 | 400 | 270 | 280 | 420 |
| WB0245-A | 450 | 21000 | 2200 | 200 | 170 | 450 | 300 | 250 | 470 |
| WB0245-B | 450 | 21000 | 2200 | 200 | 205 | 450 | 300 | 300 | 470 |
| WB0250-A | 500 | 28500 | 2000 | 220 | 180 | 500 | 330 | 270 | 530 |
| WB0250-B | 500 | 28500 | 2000 | 220 | 225 | 500 | 330 | 330 | 530 |
| WB0255-A | 550 | 45000 | 1800 | 240 | 200 | 550 | 350 | 280 | 580 |
| WB0255-B | 550 | 45000 | 1800 | 240 | 240 | 550 | 350 | 350 | 580 |
| WB0260-A | 600 | 55000 | 1650 | 250 | 235 | 600 | 375 | 330 | 630 |
| WB0260-B | 600 | 55000 | 1650 | 250 | 265 | 600 | 375 | 385 | 630 |
| WB0265-A | 650 | 65000 | 1500 | 260 | 250 | 650 | 400 | 350 | 680 |
| WB0265-B | 650 | 65000 | 1500 | 260 | 265 | 650 | 400 | 385 | 680 |
| WB0270-A | 700 | 90000 | 1400 | 300 | 260 | 700 | 450 | 370 | 740 |
| WB0270-B | 700 | 90000 | 1400 | 300 | 310 | 700 | 450 | 450 | 740 |
| WB0280-A | 800 | 120000 | 1200 | 330 | 320 | 800 | 490 | 450 | 840 |
| WB0280-B | 800 | 120000 | 1200 | 330 | 340 | 800 | 490 | 490 | 840 |
| WB0290-A | 900 | 180000 | 1100 | 360 | 340 | 900 | 540 | 480 | 940 |
| WB0290-B | 900 | 180000 | 1100 | 360 | 400 | 900 | 540 | 590 | 940 |

To continue see next page

## Elastomer Jaw Couplings RINGFEDER® TNB BHD

| Identifier | Size | $C_1$ | $C_2$ | L | $L_2$ | $L_3$ | $L_{DD}$ | E | Gwa[1)] | $Gw_{ub}$ |
|---|---|---|---|---|---|---|---|---|---|---|
| | | mm | mm | mm | mm | mm | mm | mm | kg | kg |
| WB0230-A | 300 | 160 | 160 | 384 | 103 | 139 | 124 | 10 | 51 | 104 |
| WB0230-B | 300 | 160 | 186 | 410 | 103 | 165 | 124 | 10 | 51 | 120 |
| WB0235-A | 350 | 180 | 180 | 424 | 123 | 159 | 124 | 10 | 74 | 142 |
| WB0235-B | 350 | 180 | 231 | 475 | 123 | 210 | 124 | 10 | 74 | 191 |
| WB0240-A | 400 | 198 | 190 | 459 | 134 | 167 | 138 | 10 | 107 | 206 |
| WB0240-B | 400 | 198 | 239 | 508 | 134 | 216 | 138 | 10 | 107 | 265 |
| WB0245-A | 450 | 218 | 200 | 489 | 154 | 177 | 138 | 10 | 141 | 271 |
| WB0245-B | 450 | 218 | 239 | 528 | 154 | 216 | 138 | 10 | 141 | 322 |
| WB0250-A | 500 | 236,5 | 228 | 547,5 | 163,5 | 199 | 160 | 14 | 188 | 373 |
| WB0250-B | 500 | 236,5 | 279 | 598,5 | 163,5 | 250 | 160 | 14 | 188 | 451 |
| WB0255-A | 550 | 256,5 | 228 | 567,5 | 183,5 | 199 | 160 | 14 | 234 | 442 |
| WB0255-B | 550 | 256,5 | 279 | 618,5 | 183,5 | 250 | 160 | 14 | 234 | 534 |
| WB0260-A | 600 | 258 | 258 | 604 | 180 | 229 | 170 | 14 | 286 | 578 |
| WB0260-B | 600 | 258 | 299 | 645 | 180 | 270 | 170 | 14 | 286 | 672 |
| WB0265-A | 650 | 286,5 | 258 | 637,5 | 202,5 | 225 | 182 | 14 | 357 | 695 |
| WB0265-B | 650 | 286,5 | 299 | 678,5 | 202,5 | 266 | 182 | 14 | 357 | 767 |
| WB0270-A | 700 | 327 | 298 | 727 | 234 | 263 | 200 | 14 | 494 | 941 |
| WB0270-B | 700 | 327 | 345 | 774 | 234 | 310 | 200 | 14 | 494 | 1105 |
| WB0280-A | 800 | 357 | 338 | 797 | 264 | 303 | 200 | 14 | 652 | 1316 |
| WB0280-B | 800 | 357 | 365 | 824 | 264 | 330 | 200 | 14 | 652 | 1426 |
| WB0290-A | 900 | 407 | 338 | 853 | 307 | 297 | 214 | 14 | 906 | 1695 |
| WB0290-B | 900 | 407 | 399 | 914 | 307 | 358 | 214 | 14 | 906 | 2042 |

1) Mass information for unbored coupling parts
2) Attention on peak load. See chapter „Elastomer Jaw Couplings RINGFEDER® TNB Basic information“ in Product Paper & Tech Paper „RINGFEDER® Elastomer Jaw Couplings“

To continue see next page

# Elastomer Jaw Couplings RINGFEDER® TNB BHD

## Explanation

| | | | | | |
|---|---|---|---|---|---|
| $T_{KN}$ | = Nom. Transmissible torque | $D_2$ | = Outer diameter | $L_3$ | = Length |
| $n_{max}$ | = Max. rotation speed | $D_4$ | = Outer diameter | $L_{DD}$ | = Distance dimension |
| $d_{1kmax}$ | = Max. bore diameter $d_1$ with keyway acc. to DIN 6885-1 | $D_6$ | = Diameter | E | = Gap width between left and right component |
| $d_{2kmax}$ | = Max. bore diameter $d_2$ with keyway acc. to DIN 6885-1 | $C_1$ | = Guided length in hub bore | Gwa | = Weight of subassembly a |
| $D_1$ | = Outer diameter | $C_2$ | = Guided length in hub bore | $Gw_{ub}$ | = Weight, unbored |
| | | L | = Total length | | |
| | | $L_2$ | = Length on the hub | | |

## Ordering example

| Identifier | Size | $d_{1k}$ | $d_{2k}$ | Buffer identifier (optional) [3] | Further details |
|---|---|---|---|---|---|
| WB0240-B | 400 | 180 | 170 | Pb82 | * |

[3] If a different buffer shore hardness is selected, the values from the corresponding table must be taken into account. See chapter „Elastomer Jaw Couplings RINGFEDER® TNB Basic information“ in Product Paper & Tech Paper „RINGFEDER® Elastomer Jaw Couplings“

*) Without any other specification, we deliver as a standard: with set screws and keyway acc. to DIN 6885-1, keyway side fit P9, bore tolerance H7

Further information on
**RINGFEDER® TNB BHD**
on **www.ringfeder.com**

**Disclaimer of liability**
All technical details and notes are non-binding and cannot be used as a basis for legal claims. The user is obligated to determine whether the represented products meet his requirements. We reserve the right carry out modifications at any time in the interests of technical progress.

# Elastomer Jaw Couplings

# RINGFEDER® TNB BHD-BS

## Combination of an one-part design and a multi-part design coupling hub with brake disc and VkR buffer.

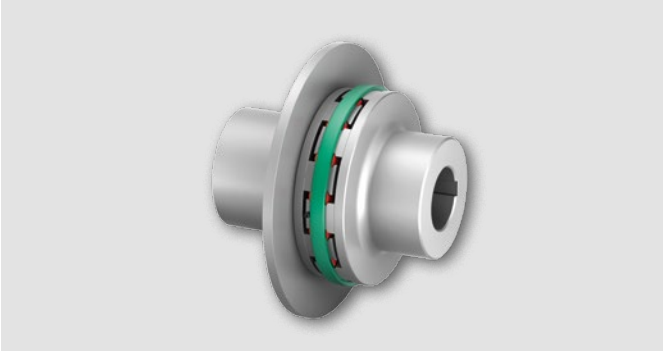

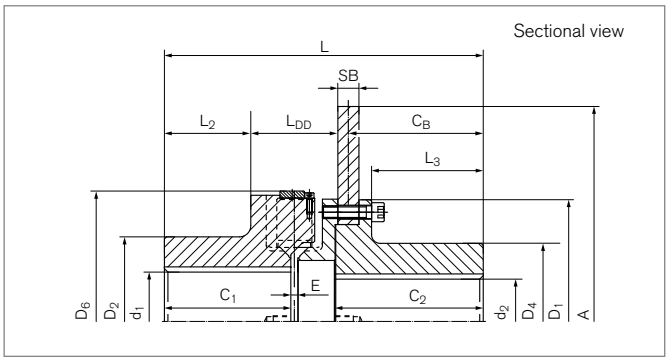


| Identifier | Size | A | SB | $T_{KN}$ 2) | $T_{BR}$ | $n_{max}$ | $d_{1kmax}$ | $d_{2kmax}$ | $D_1$ | $D_2$ | $D_4$ | $D_6$ |
|---|---|---|---|---|---|---|---|---|---|---|---|---|
| | | mm | mm | Nm | Nm | 1/min | mm | mm | mm | mm | mm | mm |
| WB0730-0630 | 300 | 630 | 30 | 6000 | 18000 | 2700 | 135 | 135 | 300 | 210 | 200 | 320 |
| WB0735-0710 | 350 | 710 | 30 | 10500 | 31500 | 2400 | 160 | 170 | 350 | 240 | 250 | 370 |
| WB0740-0800 | 400 | 800 | 30 | 16000 | 48000 | 2150 | 180 | 190 | 400 | 270 | 280 | 420 |
| WB0745-0800 | 450 | 800 | 30 | 21000 | 63000 | 2150 | 200 | 205 | 450 | 300 | 300 | 470 |
| WB0750-0900 | 500 | 900 | 30 | 28500 | 85500 | 1900 | 220 | 225 | 500 | 330 | 330 | 530 |
| WB0755-0900 | 550 | 900 | 30 | 45000 | 135000 | 1800 | 240 | 240 | 550 | 350 | 350 | 580 |
| WB0760-1000 | 600 | 1000 | 30 | 55000 | 165000 | 1650 | 250 | 265 | 600 | 375 | 385 | 630 |
| WB0765-1000 | 650 | 1000 | 30 | 65000 | 195000 | 1500 | 260 | 265 | 650 | 400 | 385 | 680 |
| WB0770-1200 | 700 | 1200 | 30 | 90000 | 270000 | 1400 | 300 | 310 | 700 | 450 | 450 | 740 |
| WB0780-1400 | 800 | 1400 | 30 | 120000 | 375000 | 1200 | 330 | 340 | 800 | 490 | 490 | 840 |
| WB0790-1500 | 900 | 1500 | 30 | 180000 | 540000 | 1100 | 360 | 400 | 900 | 540 | 590 | 940 |

| Identifier | Size | $C_1$ | $C_2$ | $C_B$ | L | $L_2$ | $L_3$ | $L_{DD}$ | E | $Gw_{BS}$ 1) | $Gw_{ub}$ |
|---|---|---|---|---|---|---|---|---|---|---|---|
| | | mm | mm | mm | mm | mm | mm | mm | mm | kg | kg |
| WB0730-0630 | 300 | 160 | 216 | 198 | 440 | 103 | 165 | 124 | 10 | 142 | 193 |
| WB0735-0710 | 350 | 180 | 261 | 243 | 505 | 123 | 210 | 124 | 10 | 210 | 284 |
| WB0740-0800 | 400 | 198 | 269 | 251 | 538 | 134 | 216 | 138 | 10 | 276 | 383 |
| WB0745-0800 | 450 | 218 | 269 | 251 | 558 | 154 | 216 | 138 | 10 | 299 | 440 |
| WB0750-0900 | 500 | 236,5 | 309 | 290 | 628,5 | 163 | 250 | 160 | 14 | 413 | 601 |
| WB0755-0900 | 550 | 256,5 | 309 | 290 | 648,5 | 183,5 | 250 | 160 | 14 | 450 | 684 |
| WB0760-1000 | 600 | 258 | 329 | 310 | 675 | 180 | 270 | 170 | 14 | 571 | 857 |
| WB0765-1000 | 650 | 286,5 | 329 | 309 | 708,5 | 202,5 | 266 | 182 | 14 | 594 | 951 |
| WB0770-1200 | 700 | 327 | 375 | 355 | 804 | 234 | 310 | 200 | 14 | 876 | 1370 |
| WB0780-1400 | 800 | 357 | 395 | 375 | 854 | 264 | 330 | 200 | 14 | 1136 | 1788 |
| WB0790-1500 | 900 | 407 | 429 | 408 | 944 | 307 | 358 | 214 | 14 | 1552 | 2458 |

1) Mass information for unbored coupling parts

2) Attention on peak load. See chapter „Elastomer Jaw Couplings RINGFEDER® TNB Basic information“ in Product Paper & Tech Paper „RINGFEDER® Elastomer Jaw Couplings“

To continue see next page

# Elastomer Jaw Couplings RINGFEDER® TNB BHD-BS

## Explanation

| | | | | | |
|---|---|---|---|---|---|
| **A** | = Max. outer diameter | **$D_1$** | = Outer diameter | **$L_2$** | = Length on the hub |
| **SB** | = Disc width | **$D_2$** | = Outer diameter hub | **$L_3$** | = Length |
| **$T_{KN}$** | = Nom. Transmissible torque | **$D_4$** | = Outer diameter hub | **$L_{DD}$** | = Distance dimension |
| **$T_{BR}$** | = Brake torque | **$D_6$** | = Diameter | **E** | = Gap width between left and right component |
| **$n_{max}$** | = Max. rotation speed | **$C_1$** | = Guided length in hub bore | **$Gw_{BS}$** | = Weight of part with brake disc, unbored |
| **$d_{1kmax}$** | = Max. bore diameter $d_1$ with keyway acc. to DIN 6885-1 | **$C_2$** | = Guided length in hub bore | **$Gw_{ub}$** | = Weight, unbored |
| | | **$C_B$** | = Brake disc distance | | |
| **$d_{2kmax}$** | = Max. bore diameter $d_2$ with keyway acc. to DIN 6885-1 | **L** | = Total length | | |

## Ordering example

| Identifier | Size | $d_{1k}$ | $d_{2k}$ | Buffer identifier (optional) [3] | Further details |
|---|---|---|---|---|---|
| **WB0755-0900** | **550** | **240** | **200** | **Pb82** | * |

[3] If a different buffer shore hardness is selected, the values from the corresponding table must be taken into account. See chapter „Elastomer Jaw Couplings RINGFEDER® TNB Basic information“ in Product Paper & Tech Paper „RINGFEDER® Elastomer Jaw Couplings“

*) Without any other specification, we deliver as a standard: with set screws and keyway acc. to DIN 6885-1, keyway side fit P9, bore tolerance H7

Further information on
**RINGFEDER® TNB BHD-BS**
on **www.ringfeder.com**

**Disclaimer of liability**
All technical details and notes are non-binding and cannot be used as a basis for legal claims. The user is obligated to determine whether the represented products meet his requirements. We reserve the right carry out modifications at any time in the interests of technical progress.

# Elastomer Jaw Couplings

# RINGFEDER® TNB BHDD

## Combination of multi-part design coupling hubs with radially removable central section and VkR buffer

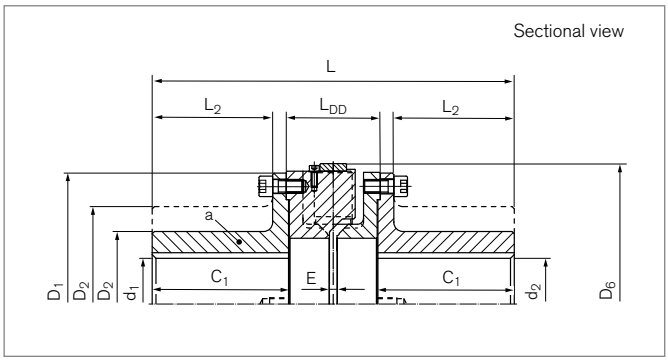


| Identifier | Size | $T_{KN}$ 2) | $n_{max}$ | $d_{1kmax}$ | $d_{2kmax}$ | $D_1$ | $D_2$ | $D_6$ |
|---|---|---|---|---|---|---|---|---|
| | | Nm | 1/min | mm | mm | mm | mm | mm |
| WB0624-A | 240 | 2500 | 4100 | 85 | 85 | 240 | 140 | 260 |
| WB0624-B | 240 | 2500 | 4100 | 100 | 100 | 240 | 150 | 260 |
| WB0630-A | 300 | 6000 | 3300 | 110 | 110 | 300 | 170 | 320 |
| WB0630-B | 300 | 6000 | 3300 | 135 | 135 | 300 | 200 | 320 |
| WB0635-A | 350 | 10500 | 2800 | 120 | 120 | 350 | 180 | 370 |
| WB0635-B | 350 | 10500 | 2800 | 170 | 170 | 350 | 250 | 370 |
| WB0640-A | 400 | 16000 | 2450 | 140 | 140 | 400 | 210 | 420 |
| WB0640-B | 400 | 16000 | 2450 | 190 | 190 | 400 | 280 | 420 |
| WB0645-A | 450 | 21000 | 2200 | 170 | 170 | 450 | 250 | 470 |
| WB0645-B | 450 | 21000 | 2200 | 205 | 205 | 450 | 300 | 470 |
| WB0650-A | 500 | 28500 | 2000 | 180 | 180 | 500 | 270 | 530 |
| WB0650-B | 500 | 28500 | 2000 | 225 | 225 | 500 | 330 | 530 |
| WB0655-A | 550 | 45000 | 1800 | 200 | 200 | 550 | 280 | 580 |
| WB0655-B | 550 | 45000 | 1800 | 240 | 240 | 550 | 350 | 580 |
| WB0660-A | 600 | 55000 | 1650 | 235 | 235 | 600 | 330 | 630 |
| WB0660-B | 600 | 55000 | 1650 | 265 | 265 | 600 | 385 | 630 |
| WB0665-A | 650 | 65000 | 1500 | 250 | 250 | 650 | 350 | 680 |
| WB0665-B | 650 | 65000 | 1500 | 265 | 265 | 650 | 385 | 680 |
| WB0670-A | 700 | 90000 | 1400 | 260 | 260 | 700 | 370 | 740 |
| WB0670-B | 700 | 90000 | 1400 | 310 | 310 | 700 | 450 | 740 |
| WB0680-A | 800 | 120000 | 1200 | 320 | 320 | 800 | 450 | 840 |
| WB0680-B | 800 | 120000 | 1200 | 340 | 340 | 800 | 490 | 840 |
| WB0690-A | 900 | 180000 | 1100 | 340 | 340 | 900 | 480 | 940 |
| WB0690-B | 900 | 180000 | 1100 | 400 | 400 | 900 | 590 | 940 |

To continue see next page

## Elastomer Jaw Couplings RINGFEDER® TNB BHDD

| Identifier | Size | $C_1$ | L | $L_2$ | $L_{DD}$ | E | Gwa[1)] | $Gw_{ub}$ |
|---|---|---|---|---|---|---|---|---|
| | | mm | mm | mm | mm | mm | kg | kg |
| WB0624-A | 240 | 130 | 360 | 113 | 104 | 10 | 30 | 58 |
| WB0624-B | 240 | 150 | 400 | 133 | 104 | 10 | 35 | 68 |
| WB0630-A | 300 | 160 | 438 | 139 | 124 | 10 | 56 | 109 |
| WB0630-B | 300 | 186 | 490 | 165 | 124 | 10 | 71 | 140 |
| WB0635-A | 350 | 180 | 478 | 159 | 124 | 10 | 72 | 139 |
| WB0635-B | 350 | 231 | 580 | 210 | 124 | 10 | 121 | 238 |
| WB0640-A | 400 | 190 | 512 | 167 | 138 | 10 | 104 | 203 |
| WB0640-B | 400 | 239 | 610 | 216 | 138 | 10 | 163 | 321 |
| WB0645-A | 450 | 200 | 532 | 177 | 138 | 10 | 136 | 266 |
| WB0645-B | 450 | 239 | 610 | 216 | 138 | 10 | 187 | 386 |
| WB0650-A | 500 | 228 | 608 | 199 | 160 | 14 | 195 | 380 |
| WB0650-B | 500 | 279 | 710 | 250 | 160 | 14 | 273 | 536 |
| WB0655-A | 550 | 228 | 608 | 199 | 160 | 14 | 219 | 427 |
| WB0655-B | 550 | 279 | 710 | 250 | 160 | 14 | 312 | 613 |
| WB0660-A | 600 | 258 | 678 | 229 | 170 | 14 | 303 | 595 |
| WB0660-B | 600 | 299 | 760 | 270 | 170 | 14 | 396 | 782 |
| WB0665-A | 650 | 258 | 688 | 225 | 182 | 14 | 350 | 688 |
| WB0665-B | 650 | 299 | 770 | 266 | 182 | 14 | 422 | 832 |
| WB0670-A | 700 | 298 | 786 | 263 | 200 | 14 | 467 | 914 |
| WB0670-B | 700 | 345 | 880 | 310 | 200 | 14 | 631 | 1241 |
| WB0680-A | 800 | 338 | 866 | 303 | 200 | 14 | 686 | 1350 |
| WB0680-B | 800 | 365 | 920 | 330 | 200 | 14 | 796 | 1570 |
| WB0690-A | 900 | 338 | 878 | 297 | 214 | 14 | 811 | 1601 |
| WB0690-B | 900 | 399 | 1000 | 358 | 214 | 14 | 1158 | 2295 |

1) Mass information for unbored coupling parts
2) Attention on peak load. See chapter „Elastomer Jaw Couplings RINGFEDER® TNB Basic information“ in Product Paper & Tech Paper „RINGFEDER® Elastomer Jaw Couplings“

To continue see next page

# Elastomer Jaw Couplings RINGFEDER® TNB BHDD

## Explanation

| | | | | | |
|---|---|---|---|---|---|
| $T_{KN}$ | = Nom. Transmissible torque | $D_1$ | = Outer diameter | $L_{DD}$ | = Distance dimension |
| $n_{max}$ | = Max. rotation speed | $D_2$ | = Outer diameter hub | E | = Gap width between left and right component |
| $d_{1kmax}$ | = Max. bore diameter $d_1$ with keyway acc. to DIN 6885-1 | $D_6$ | = Diameter | Gwa | = Weight of subassembly a |
| $d_{2kmax}$ | = Max. bore diameter $d_2$ with keyway acc. to DIN 6885-1 | $C_1$ | = Guided length in hub bore | $Gw_{ub}$ | = Weight, unbored |
| | | L | = Total length | | |
| | | $L_2$ | = Length on the hub | | |

## Ordering example

| Identifier | Size | $d_{1k}$ | $d_{2k}$ | Buffer identifier (optional) [3] | Further details |
|---|---|---|---|---|---|
| **WB0640-A** | **400** | **140** | **120** | **Pb82** | * |

[3] If a different buffer shore hardness is selected, the values from the corresponding table must be taken into account. See chapter „Elastomer Jaw Couplings RINGFEDER® TNB Basic information“ in Product Paper & Tech Paper „RINGFEDER® Elastomer Jaw Couplings“

*) Without any other specification, we deliver as a standard: with set screws and keyway acc. to DIN 6885-1, keyway side fit P9, bore tolerance H7

Further information on
**RINGFEDER® TNB BHDD**
on **www.ringfeder.com**

**Disclaimer of liability**
All technical details and notes are non-binding and cannot be used as a basis for legal claims. The user is obligated to determine whether the represented products meet his requirements. We reserve the right carry out modifications at any time in the interests of technical progress.

# Elastomer Jaw Couplings

# RINGFEDER® TNB BHDDV

## Combination of multi-part design coupling hubs for short shaft distances with VkR buffer

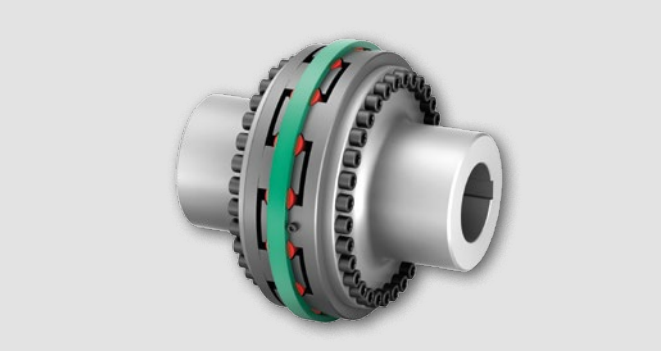

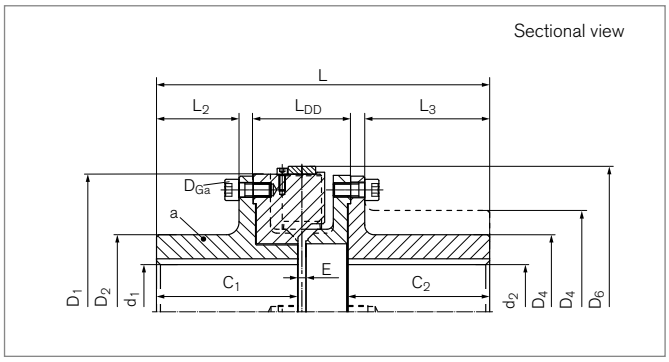


| Identifier | Size | $T_{KN}$ 2) | $n_{max}$ | $d_{1kmax}$ | $d_{2kmax}$ | $D_1$ | $D_2$ | $D_4$ | $D_6$ |
|---|---|---|---|---|---|---|---|---|---|
| | | Nm | 1/min | mm | mm | mm | mm | mm | mm |
| WB2024-A | 240 | 2500 | 4100 | 85 | 85 | 240 | 140 | 140 | 260 |
| WB2024-B | 240 | 2500 | 4100 | 85 | 100 | 240 | 140 | 150 | 260 |
| WB2030-A | 300 | 6000 | 3300 | 110 | 110 | 300 | 170 | 170 | 320 |
| WB2030-B | 300 | 6000 | 3300 | 110 | 135 | 300 | 170 | 200 | 320 |
| WB2035-A | 350 | 10500 | 2800 | 120 | 120 | 350 | 180 | 180 | 370 |
| WB2035-B | 350 | 10500 | 2800 | 120 | 170 | 350 | 180 | 250 | 370 |
| WB2040-A | 400 | 16000 | 2450 | 140 | 140 | 400 | 210 | 210 | 420 |
| WB2040-B | 400 | 16000 | 2450 | 140 | 190 | 400 | 210 | 280 | 420 |
| WB2045-A | 450 | 21000 | 2200 | 170 | 170 | 450 | 250 | 250 | 470 |
| WB2045-B | 450 | 21000 | 2200 | 170 | 205 | 450 | 250 | 300 | 470 |
| WB2050-A | 500 | 28500 | 2000 | 180 | 180 | 500 | 270 | 270 | 530 |
| WB2050-B | 500 | 28500 | 2000 | 180 | 225 | 500 | 270 | 330 | 530 |
| WB2055-A | 550 | 45000 | 1800 | 200 | 200 | 550 | 280 | 280 | 580 |
| WB2055-B | 550 | 45000 | 1800 | 200 | 240 | 550 | 280 | 350 | 580 |
| WB2060-A | 600 | 55000 | 1650 | 235 | 235 | 600 | 330 | 330 | 630 |
| WB2060-B | 600 | 55000 | 1650 | 235 | 265 | 600 | 330 | 385 | 630 |
| WB2065-A | 650 | 65000 | 1500 | 250 | 250 | 650 | 350 | 350 | 680 |
| WB2065-B | 650 | 65000 | 1500 | 250 | 265 | 650 | 350 | 385 | 680 |
| WB2070-A | 700 | 90000 | 1400 | 260 | 260 | 700 | 370 | 370 | 740 |
| WB2070-B | 700 | 90000 | 1400 | 260 | 310 | 700 | 370 | 450 | 740 |
| WB2080-A | 800 | 120000 | 1200 | 320 | 320 | 800 | 450 | 450 | 840 |
| WB2080-B | 800 | 120000 | 1200 | 320 | 340 | 800 | 450 | 490 | 840 |
| WB2090-A | 900 | 180000 | 1100 | 340 | 340 | 900 | 480 | 480 | 940 |
| WB2090-B | 900 | 180000 | 1100 | 340 | 400 | 900 | 480 | 590 | 940 |

To continue see next page

## Elastomer Jaw Couplings RINGFEDER® TNB BHDDV

| Identifier | Size | $C_1$ | $C_2$ | L | $L_2$ | $L_3$ | $L_{DD}$ | E | Gwa[1] | $Gw_{ub}$ |
|---|---|---|---|---|---|---|---|---|---|---|
| | | mm | mm | mm | mm | mm | mm | mm | kg | kg |
| WB2024-A | 240 | 130 | 130 | 315 | 68 | 113 | 104 | 10 | 28 | 56 |
| WB2024-B | 240 | 130 | 150 | 335 | 68 | 133 | 104 | 10 | 28 | 61 |
| WB2030-A | 300 | 160 | 160 | 384 | 85 | 139 | 124 | 10 | 52 | 105 |
| WB2030-B | 300 | 160 | 186 | 410 | 85 | 165 | 124 | 10 | 52 | 121 |
| WB2035-A | 350 | 180 | 180 | 424 | 105 | 159 | 124 | 10 | 71 | 138 |
| WB2035-B | 350 | 180 | 231 | 475 | 105 | 210 | 124 | 10 | 71 | 187 |
| WB2040-A | 400 | 190 | 190 | 451 | 106 | 167 | 138 | 10 | 103 | 202 |
| WB2040-B | 400 | 190 | 239 | 500 | 106 | 216 | 138 | 10 | 103 | 161 |
| WB2045-A | 450 | 200 | 200 | 471 | 116 | 177 | 138 | 10 | 134 | 264 |
| WB2045-B | 450 | 200 | 239 | 510 | 116 | 216 | 138 | 10 | 134 | 315 |
| WB2050-A | 500 | 228 | 228 | 539 | 130 | 199 | 160 | 14 | 191 | 377 |
| WB2050-B | 500 | 228 | 279 | 590 | 130 | 250 | 160 | 14 | 191 | 454 |
| WB2055-A | 550 | 228 | 228 | 539 | 130 | 199 | 160 | 14 | 220 | 428 |
| WB2055-B | 550 | 228 | 279 | 590 | 130 | 250 | 160 | 14 | 220 | 521 |
| WB2060-A | 600 | 258 | 258 | 604 | 155 | 229 | 170 | 14 | 303 | 595 |
| WB2060-B | 600 | 258 | 299 | 645 | 155 | 270 | 170 | 14 | 303 | 688 |
| WB2065-A | 650 | 258 | 258 | 609 | 146 | 225 | 182 | 14 | 350 | 688 |
| WB2065-B | 650 | 258 | 299 | 650 | 146 | 266 | 182 | 14 | 350 | 760 |
| WB2070-A | 700 | 298 | 298 | 698 | 175 | 263 | 200 | 14 | 465 | 912 |
| WB2070-B | 700 | 298 | 345 | 745 | 175 | 310 | 200 | 14 | 465 | 1076 |
| WB2080-A | 800 | 338 | 338 | 778 | 215 | 303 | 200 | 14 | 686 | 1350 |
| WB2080-B | 800 | 338 | 365 | 805 | 215 | 330 | 200 | 14 | 686 | 1460 |
| WB2090-A | 900 | 338 | 338 | 784 | 203 | 297 | 214 | 14 | 812 | 1601 |
| WB2090-B | 900 | 338 | 399 | 845 | 203 | 358 | 214 | 14 | 812 | 1948 |

[1] Mass information for unbored coupling parts
[2] Attention on peak load. See chapter „Elastomer Jaw Couplings RINGFEDER® TNB Basic information“ in Product Paper & Tech Paper „RINGFEDER® Elastomer Jaw Couplings“

To continue see next page

# Elastomer Jaw Couplings RINGFEDER® TNB BHDDV

## Explanation

| | | | | | |
|---|---|---|---|---|---|
| $n_{max}$ | = Max. rotation speed | $D_4$ | = Outer diameter hub | $L_{DD}$ | = Distance dimension |
| $T_{KN}$ | = Nom. Transmissible torque | $D_6$ | = Diameter | E | = Gap width between left and right component |
| $d_{1kmax}$ | = Max. bore diameter $d_1$ with keyway acc. to DIN 6885-1 | $C_1$ | = Guided length in hub bore | Gwa | = Weight of subassembly a |
| $d_{2kmax}$ | = Max. bore diameter $d_2$ with keyway acc. to DIN 6885-1 | $C_2$ | = Guided length in hub bore | $Gw_{ub}$ | = Weight, unbored |
| $D_1$ | = Outer diameter | L | = Total length | | |
| $D_2$ | = Outer diameter hub | $L_2$ | = Length on the hub | | |
| | | $L_3$ | = Length | | |

## Ordering example

| Identifier | Size | $d_{1k}$ | $d_{2k}$ | Buffer identifier (optional) [3] | Further details |
|---|---|---|---|---|---|
| WB2035-B | 350 | 120 | 150 | Pb82 | * |

[3] If a different buffer shore hardness is selected, the values from the corresponding table must be taken into account. See chapter „Elastomer Jaw Couplings RINGFEDER® TNB Basic information“ in Product Paper & Tech Paper „RINGFEDER® Elastomer Jaw Couplings“

*) Without any other specification, we deliver as a standard: with set screws and keyway acc. to DIN 6885-1, keyway side fit P9, bore tolerance H7

Further information on
**RINGFEDER® TNB BHDDV**
on **www.ringfeder.com**

**Disclaimer of liability**
All technical details and notes are non-binding and cannot be used as a basis for legal claims. The user is obligated to determine whether the represented products meet his requirements. We reserve the right carry out modifications at any time in the interests of technical progress.

# Elastomer Jaw Couplings

# RINGFEDER® TNB BHDDVV

## Symmetrical setup of multi-part design coupling hubs with very short shaft distances with VkR buffers

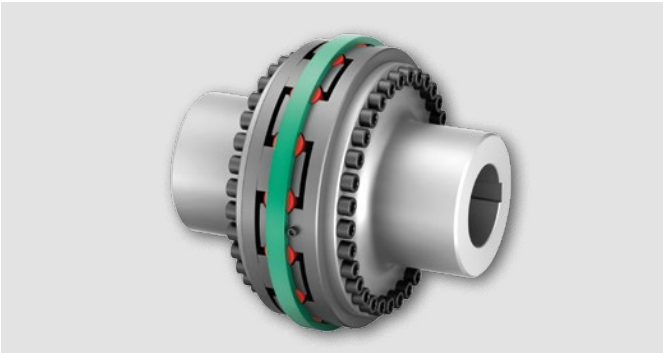

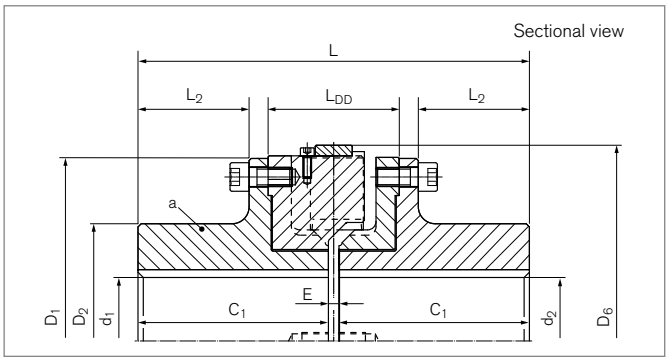


| Identifier | Size | $T_{KN}$ 2) | $n_{max}$ | $d_{1kmax}$ | $d_{2kmax}$ | $D_1$ | $D_2$ | $D_6$ |
|---|---|---|---|---|---|---|---|---|
| | | Nm | 1/min | mm | mm | mm | mm | mm |
| WB1624 | 240 | 2500 | 4100 | 85 | 85 | 240 | 140 | 260 |
| WB1630 | 300 | 6000 | 3300 | 110 | 110 | 300 | 170 | 320 |
| WB1635 | 350 | 10500 | 2800 | 120 | 120 | 350 | 180 | 370 |
| WB1640 | 400 | 16000 | 2450 | 140 | 140 | 400 | 210 | 420 |
| WB1645 | 450 | 21000 | 2200 | 170 | 170 | 450 | 250 | 470 |
| WB1650 | 500 | 28500 | 2000 | 180 | 180 | 500 | 270 | 530 |
| WB1655 | 550 | 45000 | 1800 | 200 | 200 | 550 | 280 | 580 |
| WB1660 | 600 | 55000 | 1650 | 235 | 235 | 600 | 330 | 630 |
| WB1665 | 650 | 65000 | 1500 | 250 | 250 | 650 | 350 | 680 |
| WB1670 | 700 | 90000 | 1400 | 260 | 260 | 700 | 370 | 740 |
| WB1680 | 800 | 120000 | 1200 | 320 | 320 | 800 | 450 | 840 |
| WB1690 | 900 | 180000 | 1100 | 340 | 340 | 900 | 480 | 940 |

| Identifier | Size | L | $L_2$ | $L_{DD}$ | E | Gwa 1) | $Gw_{ub}$ |
|---|---|---|---|---|---|---|---|
| | | mm | mm | mm | mm | kg | kg |
| WB1624 | 240 | 270 | 68 | 104 | 10 | 28 | 54 |
| WB1630 | 300 | 330 | 85 | 124 | 10 | 52 | 102 |
| WB1635 | 350 | 370 | 105 | 124 | 10 | 71 | 137 |
| WB1640 | 400 | 390 | 106 | 138 | 10 | 103 | 200 |
| WB1645 | 450 | 410 | 116 | 138 | 10 | 134 | 263 |
| WB1650 | 500 | 470 | 130 | 160 | 14 | 191 | 373 |
| WB1655 | 550 | 470 | 130 | 160 | 14 | 220 | 429 |
| WB1660 | 600 | 530 | 155 | 170 | 14 | 303 | 595 |
| WB1665 | 650 | 530 | 146 | 182 | 14 | 350 | 688 |
| WB1670 | 700 | 610 | 175 | 200 | 14 | 465 | 910 |
| WB1680 | 800 | 690 | 215 | 200 | 14 | 686 | 1350 |
| WB1690 | 900 | 690 | 203 | 214 | 14 | 812 | 1602 |

1) Mass information for unbored coupling parts
2) Attention on peak load. See chapter „Elastomer Jaw Couplings RINGFEDER® TNB Basic information“ in Product Paper & Tech Paper „RINGFEDER® Elastomer Jaw Couplings“

To continue see next page

# Elastomer Jaw Couplings RINGFEDER® TNB BHDDVV

## Explanation

| | | | | | |
|---|---|---|---|---|---|
| $T_{KN}$ | = Nom. Transmissible torque | $D_2$ | = Outer diameter hub | E | = Gap width between left and right component |
| $n_{max}$ | = Max. rotation speed | $D_6$ | = Diameter | Gwa | = Weight of subassembly a |
| $d_{1kmax}$ | = Max. bore diameter $d_1$ with keyway acc. to DIN 6885-1 | $C_1$ | = Guided length in hub bore | $Gw_{ub}$ | = Weight, unbored |
| $d_{2kmax}$ | = Max. bore diameter $d_2$ with keyway acc. to DIN 6885-1 | L | = Total length | | |
| $D_1$ | = Outer diameter | $L_2$ | = Length on the hub | | |
| | | $L_{DD}$ | = Distance dimension | | |

## Ordering example

| Identifier | Size | $d_{1k}$ | $d_{2k}$ | Buffer identifier (optional) [3] | Further details |
|---|---|---|---|---|---|
| WB1635 | 350 | 110 | 120 | Pb82 | * |

[3] If a different buffer shore hardness is selected, the values from the corresponding table must be taken into account. See chapter „Elastomer Jaw Couplings RINGFEDER® TNB Basic information“ in Product Paper & Tech Paper „RINGFEDER® Elastomer Jaw Couplings“

*) Without any other specification, we deliver as a standard: with set screws and keyway acc. to DIN 6885-1, keyway side fit P9, bore tolerance H7

Further information on
**RINGFEDER® TNB BHDDVV**
on **www.ringfeder.com**

**Disclaimer of liability**
All technical details and notes are non-binding and cannot be used as a basis for legal claims. The user is obligated to determine whether the represented products meet his requirements. We reserve the right carry out modifications at any time in the interests of technical progress.

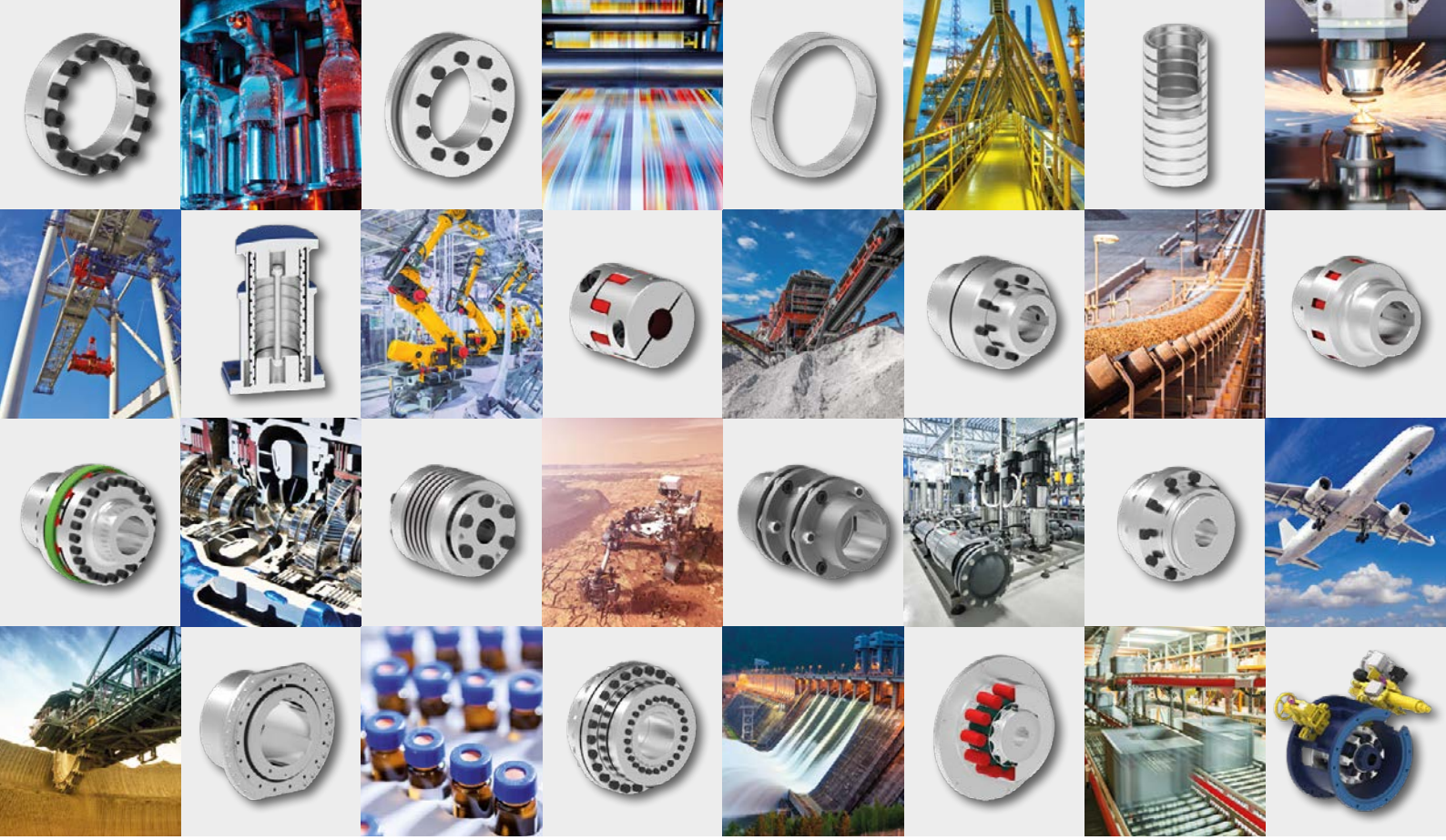


**RINGFEDER POWER TRANSMISSION GMBH**
Werner-Heisenberg-Straße 18, 64823 Groß-Umstadt, Germany · Phone: +49 6078 9385-0 · Fax: +49 6078 9385-100
E-Mail: sales.international@ringfeder.com

**RINGFEDER POWER TRANSMISSION SP. Z O. O.**
Ul. Szyby Rycerskie 6, 41-909 Bytom, Poland · Phone: +48 32 301 53 00 · Fax: +48 32 722 44 44 · E-Mail: sales.poland@ringfeder.com

**RINGFEDER POWER TRANSMISSION USA CORP.**
291 Boston Turnpike, Bolton, CT 06043, USA · Toll Free: +1 888 746-4333 · Phone: +1 201 666-3320 · Fax: +1 860 646-2645
E-Mail: sales.usa@ringfeder.com

**CARLYLE JOHNSON MACHINE COMPANY, LLC.**
291 Boston Turnpike, Bolton, CT 06043, USA · Phone: +1 860 643-1531 · Fax: +1 860 646-2645 · E-Mail: info@cjmco.com

**HENFEL INDÚSTRIA METALÚRGICA LTDA.**
Av. Maj. Hilário Tavares Pinheiro 3447, Pq. Ind. Carlos Tonanni, CEP 14871-300, Jaboticabal, SP, Brazil · Phone: +55 (16) 3209-3422
E-Mail: vendas@henfel.com.br

**RINGFEDER POWER TRANSMISSION INDIA PVT. LTD.**
Falcon Heights, 4th Floor, Plot No. 30, Industrial Estate, Perungudi, Chennai, 600 096, India · Phone: +91 44 2679-1411
E-Mail: sales.india@ringfeder.com

**KUNSHAN RINGFEDER POWER TRANSMISSION CO. LTD.**
No. 406 Jiande Road, Zhangpu 215321, Kunshan, Jiangsu Province, China · Phone: +86 512 5745-3960 · Fax: +86 512 5745-3961
E-Mail: sales.china@ringfeder.com


Partner for Performance

**www.ringfeder.com**

RINGFEDER
POWER TRANSMISSION