CKD

Pneumatic Valves

Pilot operated type | Direct acting type | Explosion-proof
Manual selector type | Related products

Vol. 9

Ver. 2

Catalog No. CB-023SA-9

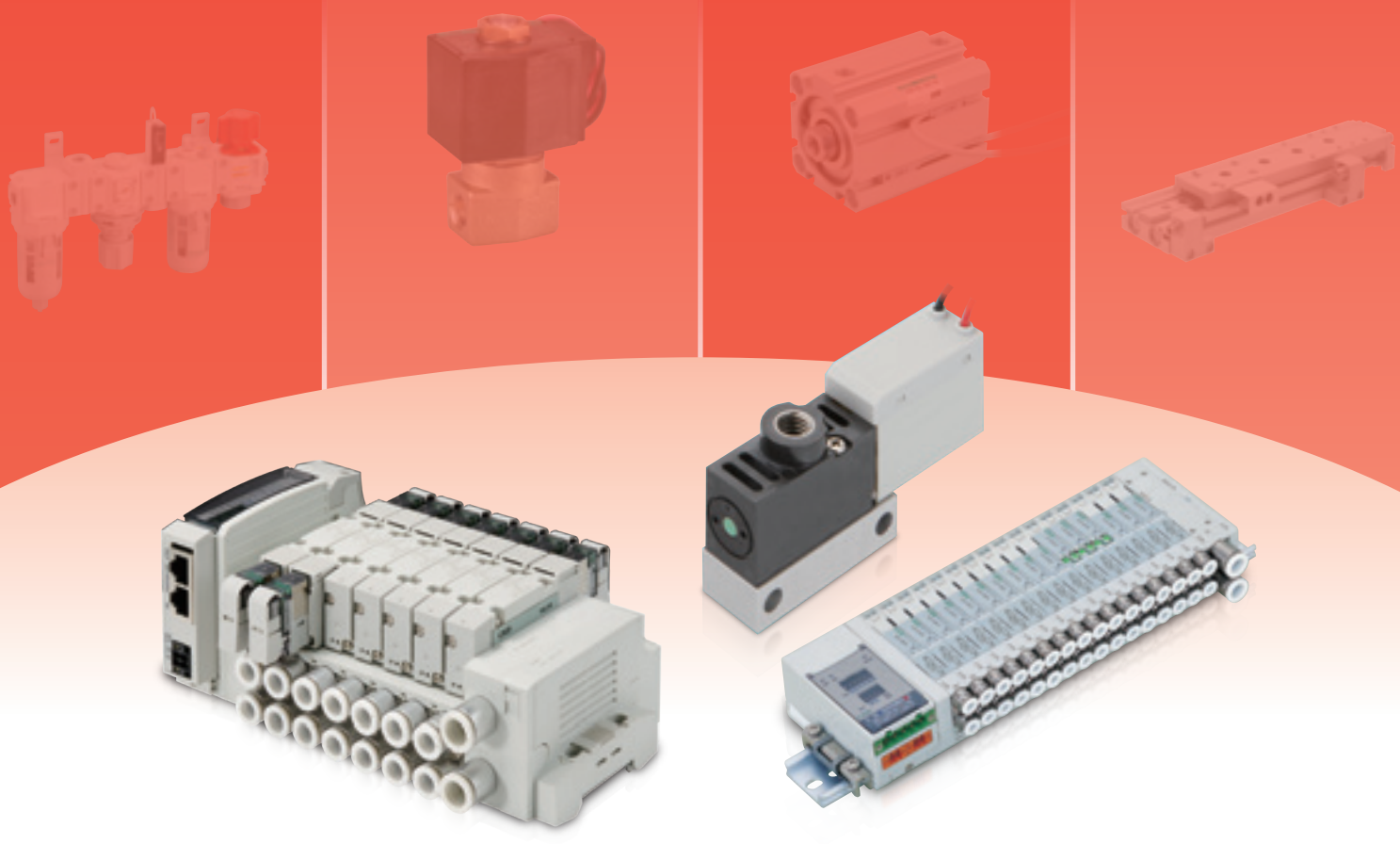

Guide to CKD Components General Catalog

CKD offers a wide variety of products
to meet your various needs.
Select the ideal product
according to your application.

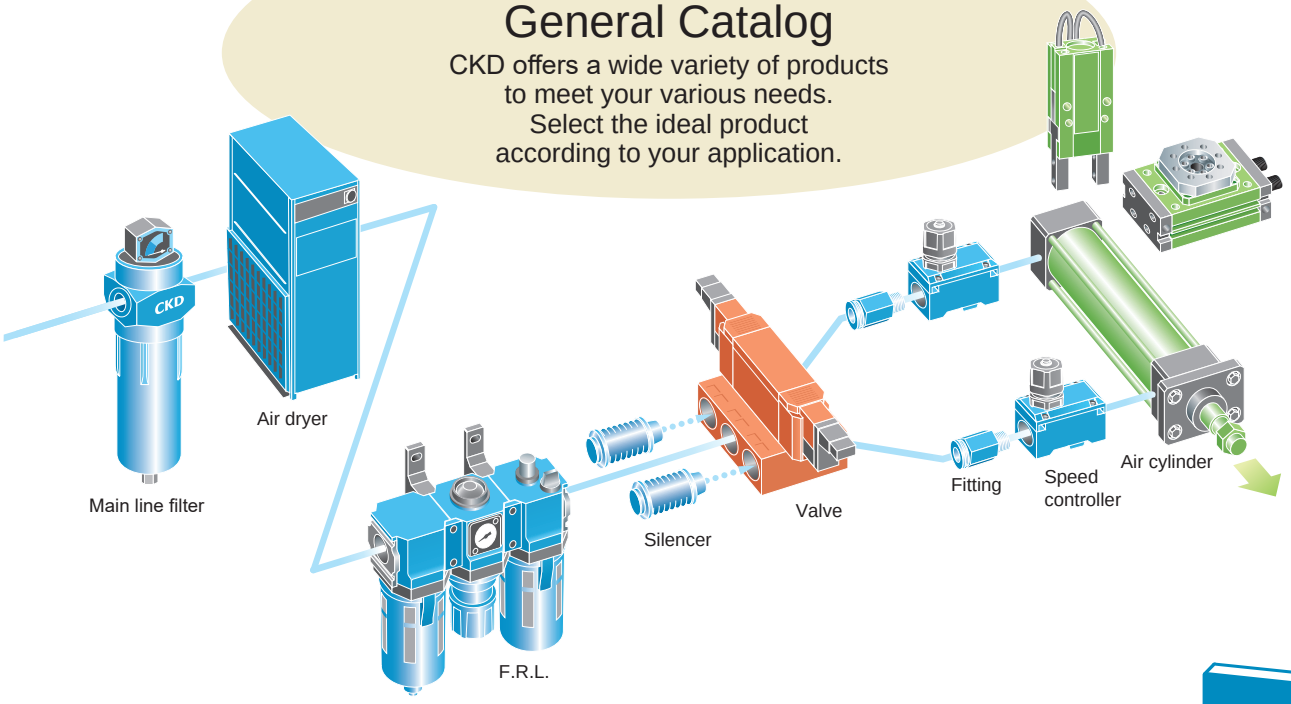

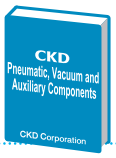

Pneumatic, Vacuum and Auxiliary Components

F.R.L. units
- Modular design (F.R.L.)
- Drain separator
- Anti-bacterial / bacteria-removing filter
- Compact regulator / Filter regulator
- Large bore size filter / Regulator
- Precision regulator
- Mechanical pressure switch
- Residual pressure exhaust valve
- Adapter/joiner
- Pressure gauge
- Vacuum filter / Regulator
- Clean filter / Regulator
- Electro pneumatic regulator



Pneumatic auxiliary components
- Speed controller
- Silencer
- Auxiliary valve
- Fitting/tube
- Air blow nozzle



Air unit components
- Clean air unit
- Air unit

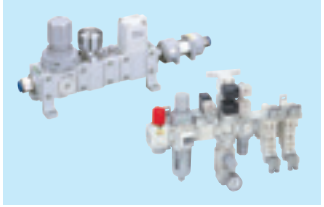

Precision components
- Glass float module
- Precise suction plate
- Magnetic spring buffer

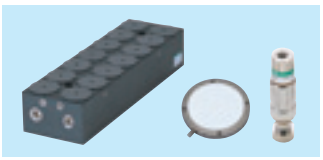

Pressure sensors
- Electronic pressure switch
- Contact/close contact check/ cutting tool breakage detection switch
- Air sensor
- Pressure switch for coolant

Sensor/controller components
- Gas flow sensor
- Gas flow controllers
- Water flow rate sensor



Total air systems
- Total air system (detector/circuit device)
- γ system (PLC components/ signal control components)

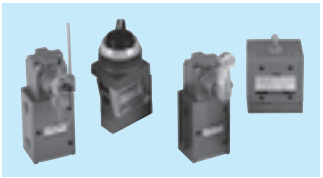

Gas generator
- Nitrogen gas extraction unit
- Oxygen concentration monitor



Main line units
- Air dryer
- High polymer membrane Air dryer unit
- Main line filter
- Drain discharger



● Catalogs for chemical liquids for semiconductors and valves for process gases are also available.

Pneumatic Cylinders I and II

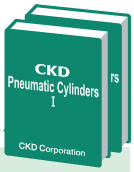

Pneumatic Cylinders I

- Standard
- With valve
- Space saving structure
- Rodless type
- Related products
  - Shock absorber
  - Free joint
  - Simplified floating joint
  - Speed controller
- Cylinder switches

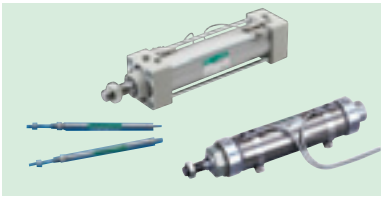
Standard


Space saving structure

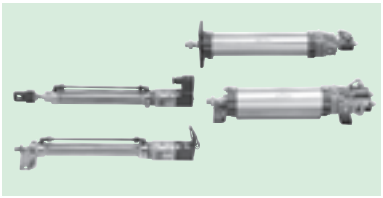
With valve

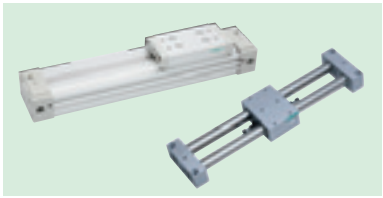
Rodless

Pneumatic Cylinders II

- Combined functions
- Braking and position locking
- High speed
- Special type
- Oscillation/rotation drive
- Modular unit
- Length measuring function
- Hands/chucks
- Related products
  - Shock absorber
  - Free joint
  - Simplified floating joint
  - Speed controller
- Cylinder switches

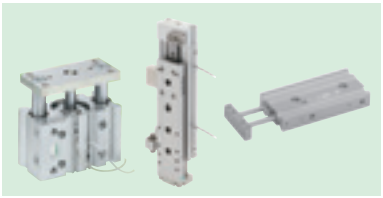
Combined functions

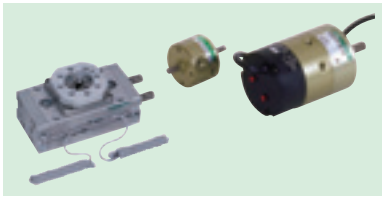
Oscillation/rotation drive

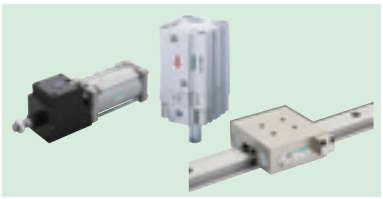
With brake/position locking


Hand/chuck

Pneumatic Valves

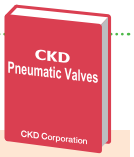

- Pilot operated
- Direct acting
- Explosion-proof
- Manual selector
- Related products

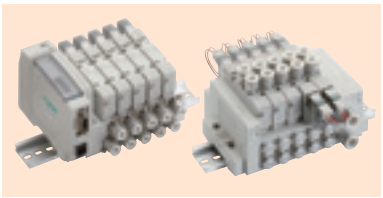
3, 4, 5-port pilot operated valve

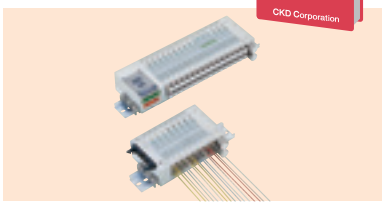
Reduced wiring valve

General Purpose Valves

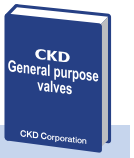

- 2, 3-port solenoid valves for various fluid control
  - Direct acting 2, 3-port solenoid valve
  - Pilot operated 2-port solenoid valve
  - Air driven 2, 3-port valve
  - Motorized ball valve
  - Components for Life Science
  - Related products for water
  - Gas combustion system
  - Automatic watering control device
  - Products for outdoor use
  - Special fluid control valve

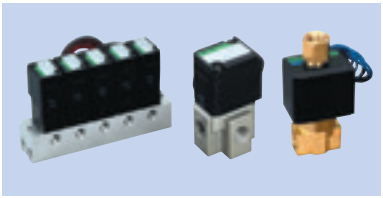
2, 3-port direct acting solenoid valve


2-port air operated valve

Index Units (Index Drive)



- Roller gear cam units
- Parallel cam units
- Pick and place units
- Direct drive actuators
- Drivers/controllers/dedicated terminals



Search
Selection
Precautions

3, 4, 5-port valve
4GA/B
M4GA/B
MN4GA/B
4GA/B (master)
4GB With sensor
4GD/E
M4GD/E
MN4GD/E
4GA4/B4
MN3E/MN4E
W4GA/B2
W4GB4
MN3S0/MN4S0
4SA/B0
4KA/B
4KA/B (master)
4F
4F (master)
PV5G/GMF
PV5/GMF
PV5S-0 (master)

2, 3-port valve
3Q
MV3QR
3MA/B0
3PA/B
P/M/B
NP/NAP/NVP

Explosion-proof
4G*0EJ
4F*0EX
4F*0E

Manual
HMV/HSV
2QV/3QV

Related products
SKH
Silencer
Total air systems (Total Air)
Total air systems (Gamma)

Ending

I N D E X

User's Guide Intro Page 3

1 Search by product name/model No.
Product name Intro Page 1
Model No. index in alphabetic order Ending Page 48

2 Search by product series Intro Page 5
Select from external appearance and product description of each series.
Master valve Intro Page 11
Serial transmission system Intro Page 12
Recommended alternative products Intro Page 13
New products Intro Page 14

Guide for CKD Electronic Catalog Intro Page 15

3 Search by flow characteristics C Intro Page 17

4 Search by specifications and variation Intro Page 29

System selection Intro Page 39
"Select by cylinder bore size and operating speed" or
"Select by load value and operating time".

⚠ Safety precautions Intro Page 59
* For cautions for individual products, read the cautions for the corresponding series.

Flow characteristics display method	Intro Page 58
Systems	Ending Page 1
Ozone proof components	Ending Page 5
International System of Units (SI units)	Ending Page 18
JIS symbol list	Ending Page 19
● CE Marking	Ending Page 30
● CKD RoHS Compliance	Ending Page 32
ISO9001/ISO14001 Certification	Ending Page 34
Index (alphabetic order)	Ending Page 48

Catalogs and CAD data
(2D/3D-CAD) can be downloaded
from the CKD website.
https://www.ckd.co.jp/kiki/en/

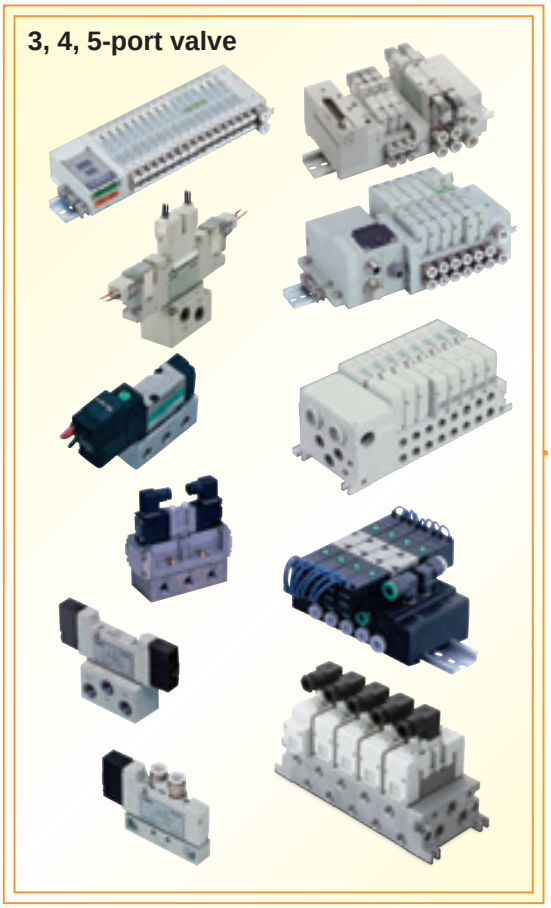

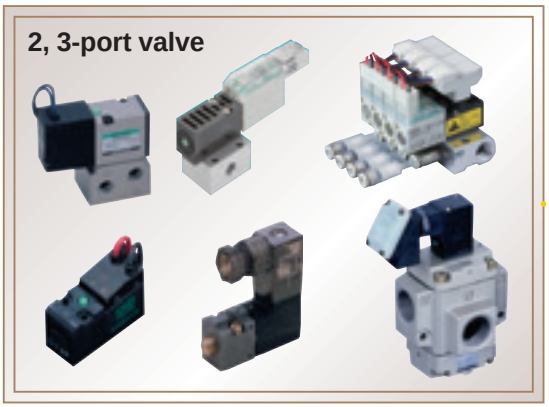

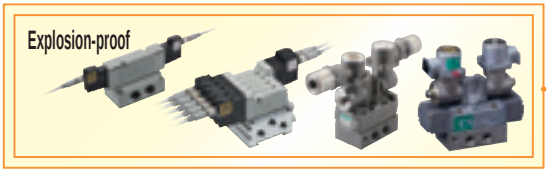

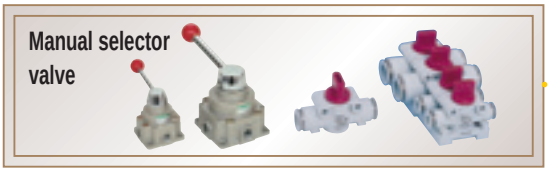



Product group	Product name	Page
3, 4, 5-port valve	Pilot operated 3, 5-port valve $4G^{A}_{D}/4G^{B}_{E}/MN4G^{A}_{D}/MN4G^{B}_{E}$	1
	Small pilot operated 3, 4-port valve MN3E0/MN4E0	863
	3, 5-port pilot operated valve (plug-in block manifold) W4GB2/MW4GA2/MW4GB2/MW4GZ2	965
	Pilot operated 5-port valve (plug-in manifold) W4GB4/W4GZ4/MW4GB4/MW4GZ4	1111
	Pilot operated 3, 4-port valve (pneumatic valve) MN3SO/MN4S0	1191
	Pilot operated 5-port valve (small pneumatic valve) 4SA0/4SB0	1231
	Pilot operated 3, 4, 5-port valve (pneumatic valve) 4KA/4KB	1257
	Pilot operated 5-port valve (pneumatic valve) 4F	1365
	Pilot operated 5-port valve (ISO valve) PV5G/PV5/GMF/PV5S-0	1465
2, 3-port valve	Direct acting 3-port valve 3QE/3QB/3QRA/3QRB	1539
	3QR negative pressure switching unit MV3QRA/MV3QRB	1573
	Direct acting 3-port valve (small pneumatic valve) 3MA0/3MB0	1591
	Direct acting 3-port valve (pneumatic valve) 3PA/3PB	1607
	Pilot operated 2, 3, 5-port valve (miniature pneumatic valve) P/M/B	1633
	Large flow rate 3-port valve NP/NAP/NVP	1673
Explosion-proof	Pilot operated explosion-proof 3, 5-port valve 4G**0EJ	1697
	Pilot operated explosion-proof 5-port valve 4F**0EX	1779
	Pilot operated explosion-proof 5-port valve (pneumatic valve) 4F**0E	1807
Manual selector valve	Manual selector valve HMV/HSV	1837
	Quick valve 2QV/3QV	1845
Related products	Shock absorbing valve SKH	1855
	Silencer	1875
	Total air systems	1899

3, 4, 5-port valve
- 4GA/B
- M4GA/B
- MN4GA/B
- 4GA/B (master)
- 4GB With sensor
- 4GD/E
- M4GD/E
- MN4GD/E
- 4GA4/B4
- MN3E/MN4E
- W4GA/B2
- W4GB4
- MN3S0/MN4S0
- 4SA/B0
- 4KA/B
- 4KA/B (master)
- 4F
- 4F (master)
- PV5G/GMF
- PV5/GMF
- PV5S-0 (master)

2, 3-port valve
- 3Q
- MV3QR
- 3MA/B0
- 3PA/B
- P/M/B
- NP/NAP/NVP

Explosion-proof
- 4G*0EJ
- 4F*0EX
- 4F*0E

Manual
- HMV/HSV
- 2QV/3QV

Related products
- SKH
- Silencer
- Total air systems (Total Air)
- Total air systems (Gamma)

Ending

User's Guide (How to browse/use the catalog)

Quickly search for and select a desired product using methods **1** to **4**.

1 Search by product name/model No.

If the product name/model No. are already determined, the desired series page can be found.

From INDEX

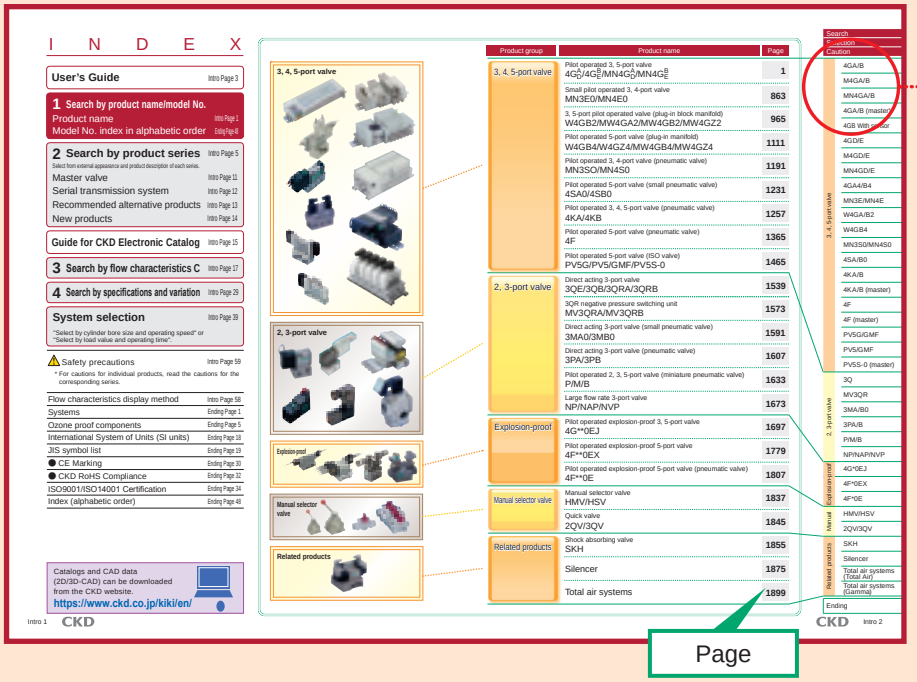

From page side indices

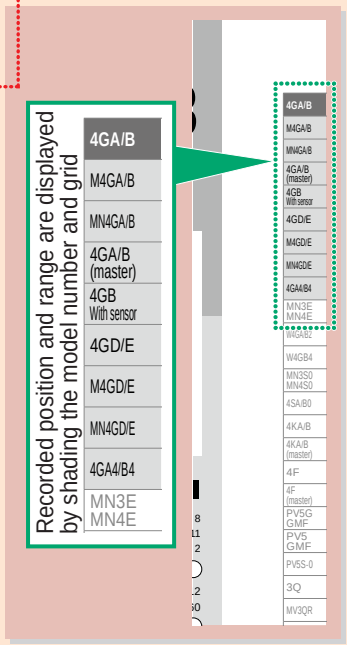

3 Search by flow characteristics C

Intro Pages 17 to 28

If flow characteristics C have been decided, the desired series page can be found.

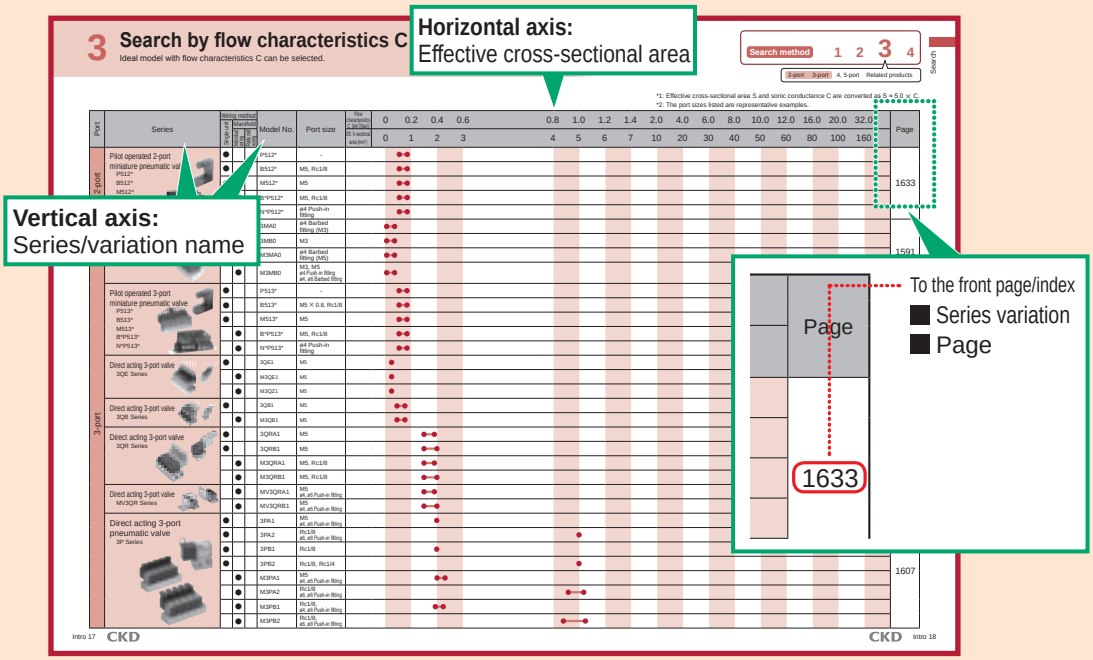

Ending Page 48 to 74

2 Search by product series Intro Pages 5 to 12

If the product's series name is already determined, the desired series page can be found.

In alphabetical order

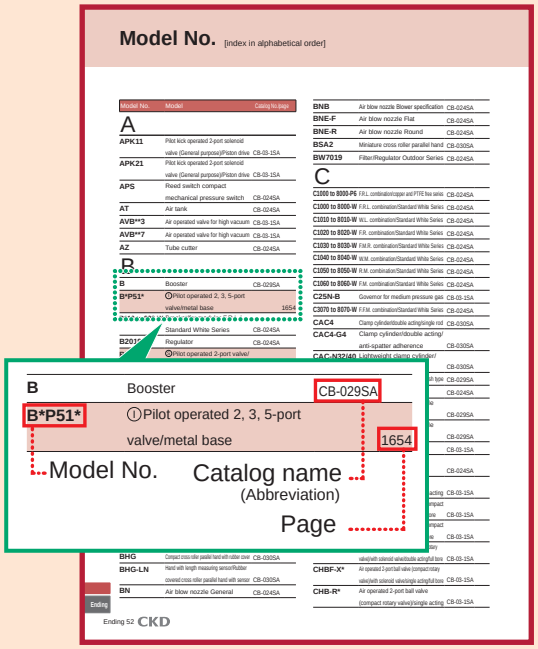

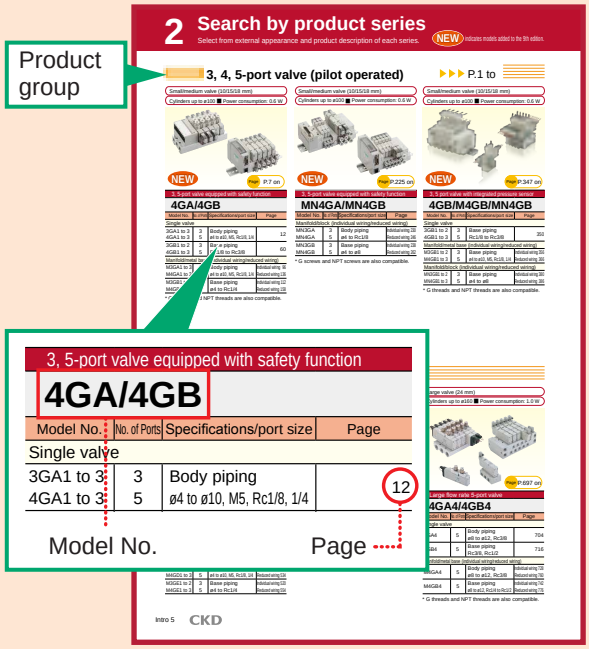

4 Search by specifications and variation Intro Page 29 to 38

If the variation format is already determined, the desired product can be found.

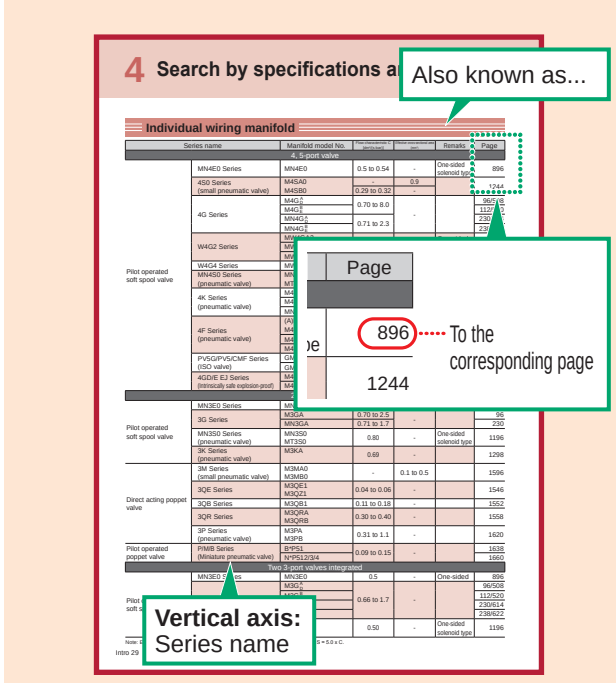

Icons (marks)

For easier use of the catalog, each item is marked and compatible items are indicated in the text.

Mark	Meaning	Details
CAD	CAD data is available for items with CAD marks in dimensions.	Intro Page 15
CE	European Standards compliant products.	Ending Page 30
RoHS	RoHS-compliant products.	Ending Page 32

2 Search by product series

Select from external appearance and product description of each series.

NEW indicates models added to the 9th edition.

3, 4, 5-port valve (pilot operated)

P.1 to

Small/medium valve (10/15/18 mm)
Cylinders up to ø100 ■ Power consumption: 0.6 W

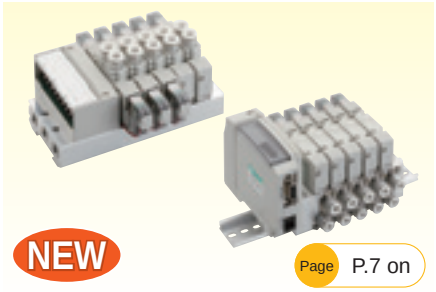

NEW

Page P.7 on

3, 5-port valve equipped with safety function

4GA/4GB

Model No.	No. of Ports	Specifications/port size	Page
Discrete valve			
3GA1 to 3 4GA1 to 3	3 5	Body piping ø4 to ø10, M5, Rc1/8, 1/4	12
3GB1 to 2 4GB1 to 3	3 5	Base piping Rc1/8 to Rc3/8	60
Manifold/metal base (individual wiring/reduced wiring)			
M3GA1 to 3 M4GA1 to 3	3 5	Body piping ø4 to ø10, M5, Rc1/8, 1/4	Individual wiring 96 Reduced wiring 136
M3GB1 to 2 M4GB1 to 3	3 5	Base piping ø4 to Rc1/4	Individual wiring 112 Reduced wiring 158

* G threads and NPT threads are also compatible.

Small/medium valve (10/15/18 mm)
Cylinders up to ø100 ■ Power consumption: 0.6 W

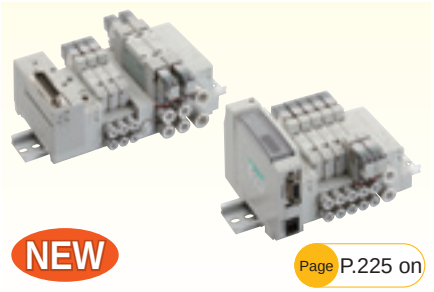

NEW

Page P.225 on

3, 5-port valve equipped with safety function

MN4GA/MN4GB

Model No.	No. of Ports	Specifications/port size	Page
Manifold/block (individual wiring/reduced wiring)			
MN3GA MN4GA	3 5	Body piping ø4 to Rc1/8	Individual wiring 230 Reduced wiring 246
MN3GB MN4GB	3 5	Base piping ø4 to ø8	Individual wiring 238 Reduced wiring 262

* G screws and NPT screws are also compatible.

Small/medium valve (10/15/18 mm)
Cylinders up to ø100 ■ Power consumption: 0.6 W

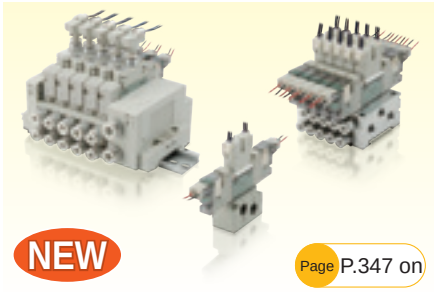

NEW

Page P.347 on

3, 5 port valve with integrated pressure sensor

4GB/M4GB/MN4GB

Model No.	No. of Ports	Specifications/port size	Page
Discrete valve			
3GB1 to 2 4GB1 to 3	3 5	Base piping Rc1/8 to Rc3/8	350
Manifold/metal base (individual wiring/reduced wiring)			
M3GB1 to 2 M4GB1 to 3	3 5	Base piping ø4 to ø10, M5, Rc1/8, 1/4	Individual wiring 356 Reduced wiring 366
Manifold/block (individual wiring/reduced wiring)			
MN3GB1 to 2 MN4GB1 to 3	3 5	Base piping ø4 to ø8	Individual wiring 380 Reduced wiring 386

* G threads and NPT threads are also compatible.

Small/medium valve (10/15/18 mm)
Cylinders up to ø100 ■ Power consumption: 0.6 W

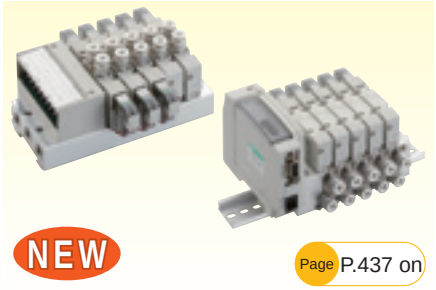

NEW

Page P.437 on

3, 5-port valve equipped with safety function

4GD/4GE

Model No.	No. of Ports	Specifications/port size	Page
Discrete valve			
3GD1 to 3 4GD1 to 3	3 5	Body piping ø4 to ø10, M5, Rc1/8, 1/4	442
3GE1 to 2 4GE1 to 3	3 5	Base piping Rc1/8 to Rc3/8	482
Manifold/metal base (individual wiring/reduced wiring)			
M3GD1 to 3 M4GD1 to 3	3 5	Body piping ø4 to ø10, M5, Rc1/8, 1/4	Individual wiring 508 Reduced wiring 534
M3GE1 to 2 M4GE1 to 3	3 5	Base piping ø4 to Rc1/4	Individual wiring 520 Reduced wiring 554

Small/medium valve (10/15/18 mm)
Cylinders up to ø100 ■ Power consumption: 0.6 W

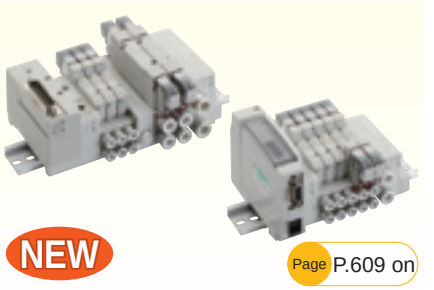

NEW

Page P.609 on

3, 5-port valve equipped with safety function

MN4GD/MN4GE

Model No.	No. of Ports	Specifications/port size	Page
Manifold/block (individual wiring/reduced wiring)			
MN3GD MN4GD	3 5	Body piping ø4 to Rc1/8	Individual wiring 614 Reduced wiring 630
MN3GE MN4GE	3 5	Base piping ø4 to ø8	Individual wiring 622 Reduced wiring 646

Large valve (24 mm)
Cylinders up to ø160 ■ Power consumption: 1.0 W

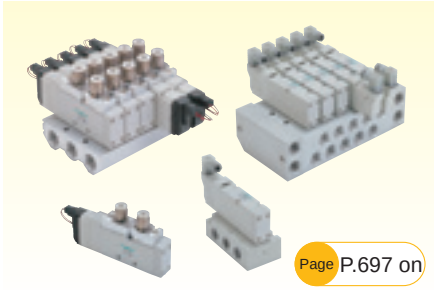

Page P.697 on

Large flow rate 5-port valve

4GA4/4GB4

Model No.	No. of Ports	Specifications/port size	Page
Discrete valve			
4GA4	5	Body piping ø8 to ø12, Rc3/8	704
4GB4	5	Base piping Rc3/8, Rc1/2	716
Manifold/metal base (individual wiring/reduced wiring)			
M4GA4	5	Body piping ø8 to ø12, Rc3/8	Individual wiring 728 Reduced wiring 760
M4GB4	5	Base piping ø8 to ø12, Rc1/4 to Rc1/2	Individual wiring 742 Reduced wiring 776

* G threads and NPT threads are also compatible.

Small valve (7.0/10 mm)

Cylinders up to ø32 ■ Power consumption: 0.4 W and up

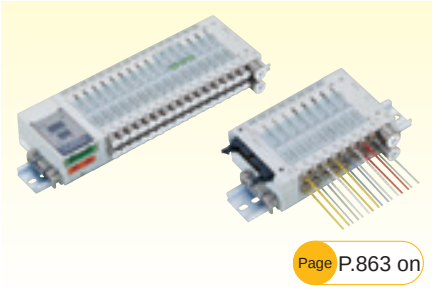

Page P.863 on

3, 4-port valve with valve height of 40 mm or less

MN3E/MN4E

Model No.	No. of Ports	Specifications/port size	Page
Block manifold (reduced wiring)			
MN3E00 MN4E00	3 4	M3 to ø4	872
Block manifold (individual wiring/reduced wiring)			
MN3E0 MN4E0	3 4	M5 to ø6	896

Medium valve (manifold pitch 16 mm)

Cylinders up to ø80 ■ Power consumption: 0.6 W

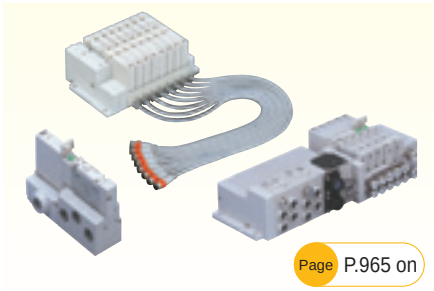

Page P.965 on

IP65 compatible plug-in block manifold 3, 5-port valve

W4G2

Model No.	No. of Ports	Specifications/port size	Page
Discrete valve			
W4GB2	5	Base piping Rc1/4	972
Individual wiring manifold			
MW3GA2-R1 MW4GA2-R1	3 5	Body piping Rc1/8, ø4 to ø8	976
MW4GB2-R1	5	Base side piping ø4 to ø8	980
MW4GZ2-R1	5	Base bottom piping ø4 to ø8	980
Reduced wiring manifold			
MW3GA2-T* MW4GA2-T*	3 5	Body piping Rc1/8, ø4 to ø8	988
MW4GB2-T*	5	Base side piping ø4 to ø8	1010
MW4GZ2-T*	5	Base bottom piping ø4 to ø8	1010

Large valve (manifold pitch 25 mm)

Cylinders up to ø125 ■ Power consumption: 1.2 W

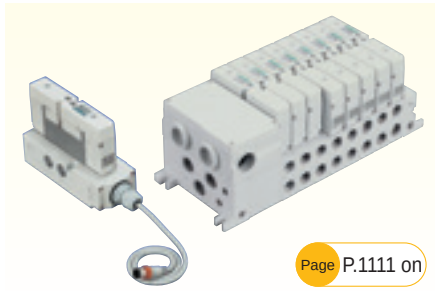

Page P.1111 on

IP65 equivalent plug-in manifold 5-port valve

W4G4

Model No.	Specifications/port size	Page
Discrete valve		
W4GB4	Base piping Rc1/4, Rc3/8	1118
W4GZ4	Base piping Rc1/4, Rc3/8	1118
Individual wiring manifold		
MW4GB4-R1	Base side piping ø8 to ø12, Rc1/4 , Rc3/8	1124
MW4GZ4-R1	Base bottom piping Rc1/4, Rc3/8	1124
Reduced wiring manifold		
MW4GB4-T*	Base side piping ø8 to ø12, Rc1/4, Rc3/8	1128
MW4GZ4-T*	Base bottom piping Rc1/4, Rc3/8	1128

* G screws and NPT screws are also compatible.

One-sided solenoid/reduced wiring valve

Cylinders up to ø40 ■ Power consumption: 0.6 W

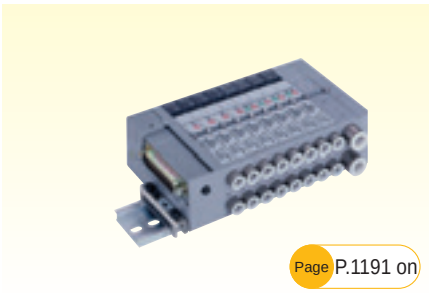

Page P.1191 on

Block manifold 3, 4-port valve

MN3S0/MN4S0 (pneumatic Valve)

Model No.	No. of Ports	Specifications/port size	Page
Block manifold (individual wiring/reduced wiring)			
MN3S0 MN4S0	3 4	DIN rail M5 to ø6	1196
MT3S0 MT4S0	3 4	Direct mounting M5 to ø6	

Small (valve width 10 mm)

Cylinders up to ø25 ■ Power consumption: 0.6 W

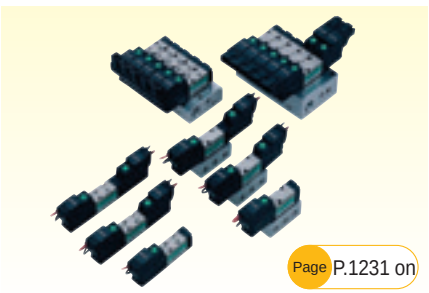

Page P.1231 on

Miniature/space saving 5-port valve

4SA0/4SB0 (small pneumatic valve)

Model No.	Specifications/port size	Page
Discrete valve		
4SA0	Body piping M3, ø4	1236
4SB0	Sub-plate piping M5	
Manifold (individual wiring/reduced wiring)		
M4SA0	Body piping M3, ø4	Individual wiring 1244
M4SB0	Sub-plate piping M5, ø4 to ø6	Individual wiring 1244 Reduced wiring 1248

2 Search by product series

Select from external appearance and product description of each series.

NEW indicates models added to the 9th edition.

3, 4, 5-port valve (pilot operated)

P.1 to

Small/medium/large valve (valve width 15/18/23/29 mm)
Cylinders up to ø160 ■ Power consumption 1.8 W

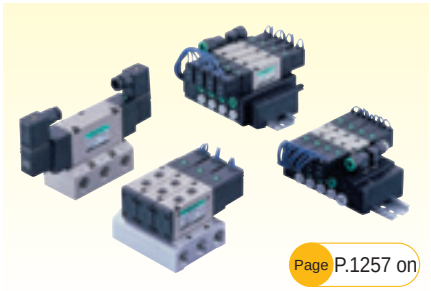

Page P.1257 on

Compact 3, 4, 5-port valve

4KA/4KB (pneumatic valve)

Model No.	No. of Ports	Specifications/port size	Page
Discrete valve			
3KA1 4KA	3 5	Body piping M5 to ø12	1264
4KB	5	Sub-plate piping Rc1/8 to Rc1/2	1282
Individual wiring manifold/metal base			
M3KA1 M4KA	3 5	Body piping M5 to ø12	1298
M4KB	4 5	Sub-plate piping M5 to ø12	1310
Individual wiring manifold/block			
MN4KB	5	Sub-block piping ø4 to ø10	1330

Small/medium/large valve
Cylinders up to ø250 ■ Power consumption: 1.8 to 6 W

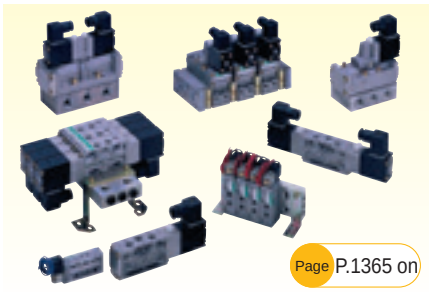

Page P.1365 on

8 series lined-up / 5-port valve

4F (pneumatic valve)

Model No.	Specifications/port size	Page
Discrete valve		
4F0 to 3	Body piping M5, Rp1/8 to Rp3/8	1372
4F4 to 7	Sub-plate piping Rc1/4 to Rc1	1386
Individual wiring manifold		
M4F0 to 3	Body piping M5, Rp1/8 to Rp3/8	1410
M4F4 to 7	Sub-plate piping Rc1/4 to Rc3/4	1438

* A4F0 . . . Model No. for the 4F0 single type.

ISO Standards compliant valve
Cylinders up to ø160 ■ Power consumption: 1.0, 1.2 W

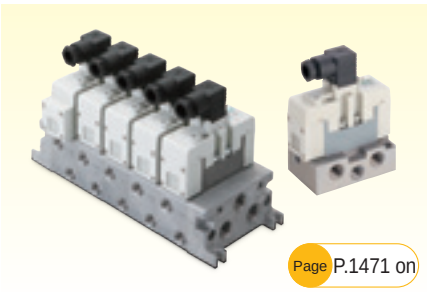

Page P.1471 on

Valve width 38 to 50 mm / 5-port valve

PV5G/GMF (DIN terminal box)

Model No.	Specifications/port size	Page
Discrete valve (sub-plate piping)		
PV5G-6	ISO size 1 Rc1/4, Rc3/8	1472
PV5G-8	ISO size 2 Rc3/8 to Rc3/4	1478
Individual wiring manifold		
GMF1	ISO size 1 Rc1/4, Rc3/8	1484
GMF2	ISO size 2 Rc3/8, Rc1/2	1488
Mix manifold		
GMFZ	ISO sizes 1/2 Mix manifold	1492

ISO Standards compliant valve
Cylinders up to ø160 ■ Power consumption: 1.2 W

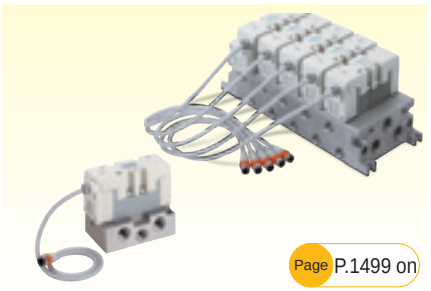

Page P.1499 on

Valve width 38 to 50 mm / 5-port valve

PV5/GMF (I/O connector)

Model No.	Specifications/port size	Page
Discrete valve (sub-plate piping)		
PV5-6R	ISO size 1 Rc1/4, Rc3/8	1500
PV5-8R	ISO size 2 Rc3/8 to Rc3/4	1506
Individual wiring manifold		
GMF1	ISO size 1 Rc1/4, Rc3/8	1512
GMF2	ISO size 2 Rc3/8, Rc1/2	1516
Mix manifold		
GMFZ	ISO sizes 1/2 Mix manifold	1520

ISO compliant master valve
Cylinders up to ø160

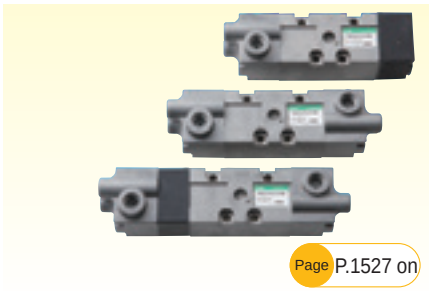

Page P.1527 on

Valve width 38 to 50 mm / 5-port valve

PV5S-0 (ISO compliant master valve)

Model No.	Specifications/port size	Page
PV5S-6-0	Rc1/4, Rc3/8	1528
PV5S-8-0	Rc3/8, Rc1/2, Rc3/4	

3-port valve (direct acting) P.1539 on

Small valve (valve width 10mm)
Cylinders up to ø25 ■ Power consumption: 2.0 to 2.4 W

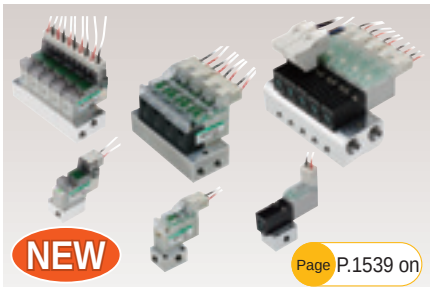

Page P.1539 on

Poppet type 3-port valve

3Q

Model No.	Specifications/port size	Page
■ 3QE		
Discrete valve		
3QE1	Sub-plate piping M5	1546
Individual wiring manifold		
M3QE1	Sub-plate side piping M5	1546
M3QZ1	Sub-plate rear piping M5	
■ 3QB		
Discrete valve		
3QB1	Sub-plate piping M5	1552
Individual wiring manifold		
M3QB1	Sub-plate piping M5	1552
■ 3QRA/3QRB		
Discrete valve		
3QRA1	Body piping M5	1558
3QRB1	Sub-plate piping M5	
Individual wiring manifold		
M3QRA1	Body piping M5 to Rc1/8	1558
M3QRB1	Sub-plate piping M5 to Rc1/8	

Small valve (valve width 10mm)
Cylinders up to ø25 ■ Power consumption: 2.0 to 2.4 W

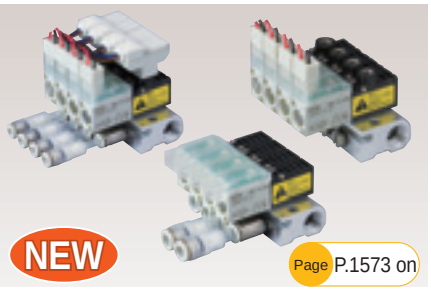

Page P.1573 on

Poppet type 3-port valve

MV3QRA/MV3QRB

Model No.	Specifications/port size	Page
MV3QRA1	Body piping M5Nø6	1576
MV3QRB1	Sub-plate piping M5Nø6	

Small valve (valve width 10mm)
Cylinders up to ø16 ■ Power consumption: 0.6 W



Page P.1591 on

Poppet type 3-port valve

3MA0/3MB0 (small pneumatic valve)

Model No.	Specifications/port size	Page
Discrete valve		
3MA0	Body piping ø4	1594
3MB0	Sub-plate piping M3	
Individual wiring manifold		
M3MA0	Body piping ø4	1596
M3MB0	Sub-plate piping ø4, ø6, M3, M5	

2, 3-port valve (pilot operated) P.1633 on

Small valve (valve width 15/22 mm)
Cylinders up to ø40 ■ Power consumption: 1.8 W

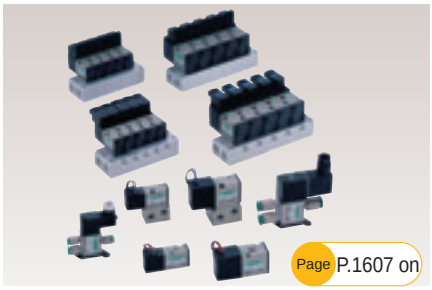

Page P.1607 on

Pressure balance poppet valve

3PA/3PB (pneumatic valve)

Model No.	Specifications/port size	Page
Discrete valve		
3PA	Body piping M5 to Rc1/8	1612
3PB	Sub-plate piping Rc1/8 to Rc1/4	
Individual wiring manifold		
M3PA	Body piping M5 to Rc1/4	1620
M3PB	Sub-plate piping Rc1/8 to Rc1/4	

Small valve (valve width 15 mm)
Port size M5, Rc1/8, ø4 ■ Power consumption 1.8 W

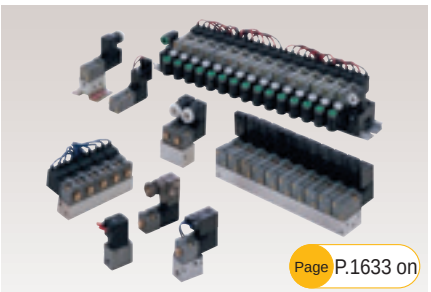

Page P.1633 on

Poppet type 2, 3, 5-port valve

P/M/B (miniature pneumatic valve)

Model No.	Specifications/port size	Page
W2P513	Two 3-port valves integrated M5	1638
P512* P513* P5142	No sub-base	
M512* M513*	Sub-base M5	
B512* B513* B5142	Sub-base M5	
Individual wiring manifold		
B*P51**	Sub-base M5, Rc1/8	1654
Block manifold		
N*P51**	Sub-block ø4	1660

Large flow rate
Port size Rc3/8 to Rc2 ■ Power consumption 4 to 8 W / DC



Page P.1673 on

3-port pneumatic/low-vacuum valve

NP/NAP/NVP

Model No.	Specifications/port size	Page
NP13/14	Internal pilot solenoid valve Rc3/8 to Rc2	1676
NAP11	Internal pilot air operated Rc3/8 to Rc2	1682
NVP11	External pilot solenoid valve Rc3/8 to Rc2	1686

2 Search by product series

Select from external appearance and product description of each series.

NEW indicates models added to the 9th edition.

Explosion-proof P.1697 on

Small/medium/large valve (10/15/18/24 mm)
Cylinders up to ø160 ■ Power consumption: 0.6 W

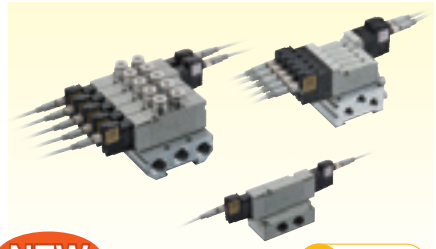

NEW Page P.1697 on

Intrinsically safe explosion-proof performance Ex ib II C T4 Gb

4GD/4GE*0EJ

Model No.	No. of ports	Specifications/port size	Page
Discrete valve			
3GD1 to 2*0EJ 4GD1 to 4*0EJ	3 5	Body piping ø1.8 to ø12, M5, Rc1/8 to Rc3/8	1700
3GE1 to 2*0EJ 4GE1 to 4*0EJ	3 5	Base piping Rc1/8 to Rc1/2	1720
Individual wiring manifold			
M3GD1 to 2*0EJ M4GD1 to 4*0EJ	3 5	Body piping ø1.8 to ø12, M5, Rc1/8 to Rc3/8	1740
MN3GE1 to 2*0EJ MN4GE1 to 3*0EJ	3 5	Base piping ø1.8 to ø12, M5, Rc1/8 to Rc1/2	1748

Pilot operated 5-port valve
Cylinders up to ø250 ■ Power consumption: 4 to 4.5 W

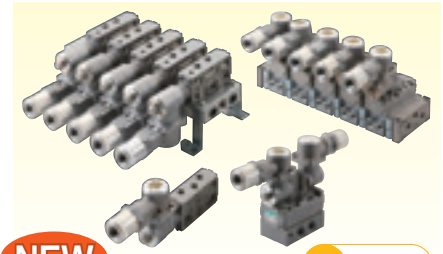

NEW Page P.1779 on

Pressure and explosion-proof performance Exd II BT4

4F**0EX (pneumatic valve)

Model No.	Specifications/port size	Page
Discrete valve		
4F3*0EX	Body piping Rp1/4 to Rp3/8	1782
4F 4 to 7 *0EX	Sub-plate piping Rc1/4 to Rc1	1782
Manifold		
M4F3*0EX	Body piping Rp1/4 to Rp3/8	1794
M4F 4 to 7 *0EX	Sub-plate piping Rc1/4 to Rc3/4	1794

Pilot operated 5-port valve
Cylinders up to ø250 ■ Power consumption: 4 to 4.5 W

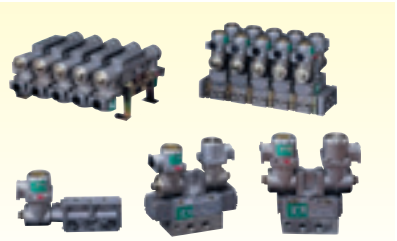

Page P.1807 on

Pressure and explosion proof enclosure d2G4 type

4F**0E (pneumatic valve)

Model No.	Specifications/port size	Page
Discrete valve		
4F3*0E	Body piping Rp1/4 to Rp3/8	1810
4F 4 to 7 *0E	Sub-plate piping Rc1/4 to Rc1	1810
Manifold		
M4F3*0E	Body piping Rp1/4 to Rp3/8	1824
M4F 4 to 7 *0E	Sub-plate piping Rc1/4 to Rc3/4	1824

Explosion-proof 2, 3-port valve General Purpose Valves

Direct acting poppet type 2, 3-port valve
■ Power consumption: 6.7 to 17 W (60 Hz)

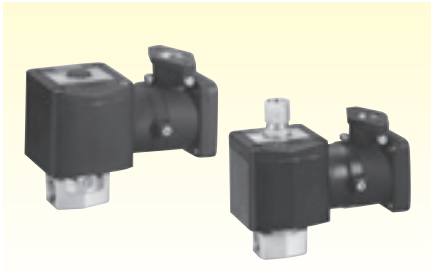

Pressure and explosion proof enclosure d2G4/d2G2 type

AB/AG (general purpose valve)

Model No.	Port size	Page
2-port valve		
AB4*E4	Rc1/4, Rc3/8	General Purpose Valves
AB41E2	Rc1/4, Rc3/8	
AB41E4-Z	Rc1/4, Rc3/8	
3-port valve		
AG4*E4	Rc1/4, Rc3/8	General Purpose Valves
AG4*E4-Z	Rc1/4, Rc3/8	

Pilot operated poppet type 2-port valve
■ Power consumption: 6.7 to 17 W (60 Hz)

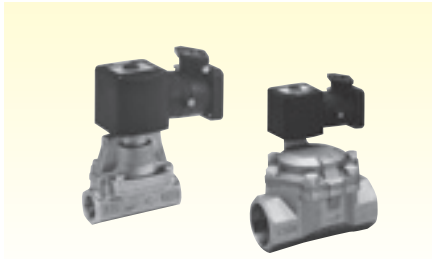

Pressure and explosion proof enclosure d2G4/d2G2 type

AD/AP (general purpose valve)

Model No.	Port size	Page
AP**E4	Rc 1/2 to 50 flange	General Purpose Valves
AD**E4	Rc 1/2 to 50 flange	
ADK**E4	Rc1/2 to Rc1	
AP**E2	Rc 1/2 to 50 flange	

Poppet type 2-port valve
■ Power consumption: 7 W (60 Hz)



Pressure and explosion proof enclosure d2G4 type for air blow

PDVE4 (pulse-jet valve)

Model No.	Port size	Page
PDVE4	Rc3/4 to Rc2	General Purpose Valves

2, 3-port valve (air blow type) ▶▶▶ General Purpose Valves

Compact poppet valve

■ Power consumption: 3 to 11.5 W/DC

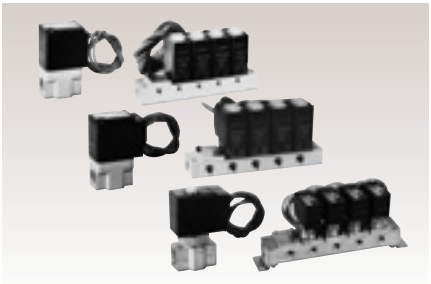

Direct acting 2-port valve by target fluid

FA/FG/FV (special purpose valve)

Model No.	Working fluid/port size	Page
Discrete valve		
FAB	For compressed air M5 to Rc1/2	General Purpose Valves
FGB	For dry air Rc1/8 to 1/2	
FVB	For medium vacuum Rc1/8 to 1/2	
Manifold		
GFAB	For compressed air M5 to Rc3/8	General Purpose Valves
GFGB	For dry air M5 to Rc3/8	
GFVB	For medium vacuum M5 to Rc3/8	

Compact poppet valve

■ Power consumption: 3 to 11.5 W/DC

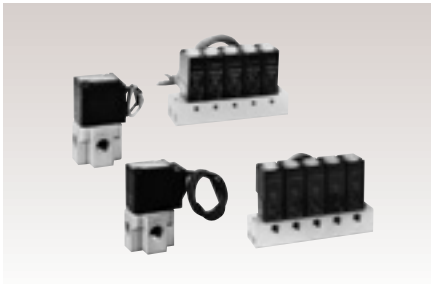

Direct acting 3-port valve by target fluid

FA/FG (special purpose valve)

Model No.	Working fluid/port size	Page
Discrete valve		
FAG	For compressed air M5 to Rc3/8	General Purpose Valves
FGG	For dry air Rc1/8 to 3/8	
Manifold		
GFAG	For compressed air M5 to Rc1/4	General Purpose Valves
GFGG	For dry air Rc1/8 to 1/4	

Compact poppet valve

■ Power consumption: 3.8 to 11 W (60 Hz)

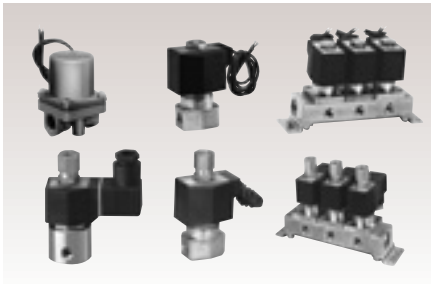

General purpose direct acting 2, 3-port valve

AB/AG (general purpose valve)

Model No.	Port size	Page
Discrete valve/2-port valve		
AB	Rc1/8 to Rc1/2	
Manifold/2-port valve		
GAB	Rc1/4	General Purpose Valves
Discrete valve/large bore size 2-port valve		
AB71	Rc1/2 to Rc1	
Discrete valve/3-port valve		
AG	Rc1/8 to Rc3/8	
Manifold/3-port valve		
GAG	Rc1/8 to Rc3/8	

Large poppet type

■ Power consumption: 3.8 to 48W (60 Hz)

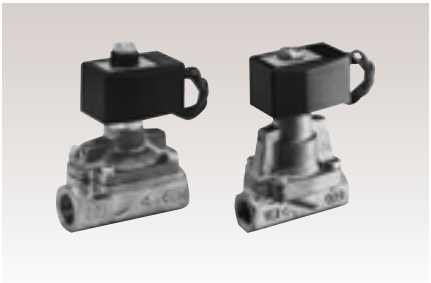

General purpose pilot operated 2-port valve

AD/AP (general purpose valve)

Model No.	Port size	Page
Piston drive		
AP11/12	8A to 25 A	
AP21/22	Rc1 1/4 to 50 flange	
Diaphragm drive		
AD11/12	8 A to 25 A	General Purpose Valves
AD21/22	Rc1 1/4 to 50 flange	
Pilot kick piston drive		
APK11/21	Rc 1/4 to 50 flange	
Pilot kick diaphragm drive		
ADK11/12/21	Rc 1/4 to 50 flange	

Miniature poppet valve

■ Power consumption 0.6 W (DC)



2-port valve for air blow

EXA

Model No.	Port size	Page
Pilot operated		
EXA	ø6 to ø12	General Purpose Valves

Medium poppet type

■ Power consumption: 3.4 to 10W (60 Hz)

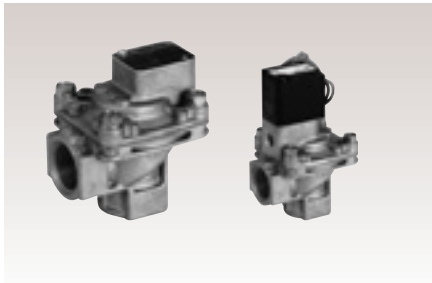

Pilot operated 2-port valve for large flow rate air blow

PD/PDV (pulse-jet valve)

Model No.	Port size	Page
Air operated valve		
PD3	Rc3/4 to Rc3	
PD2	Rc2	
Solenoid valve		
PDV3	Rc3/4 to Rc3	General Purpose Valves
PDV2	Rc2	
Multiple-series solenoid valve for PD3 operation (direct acting)		
PJVB	Rc1/8, Rc1/4	
Controller for pulsejet valve		
OMC2	Output step No.: 6, 10	

2 Search by product series

Select from external appearance and product description of each series.

NEW indicates models added to the 9th edition.

Master valve

3, 5-port valve
Cylinders of ø20 to ø100

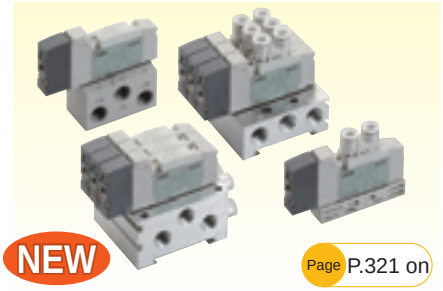

NEW

Page P.321 on

4G

Model No.	Specifications/port size	Page
Discrete valve		
3GA 4GA	Body piping ø4 to Rc1/4	324
4GB	Base piping Rc1/8 to Rc3/8	334
Manifold		
M3GA M4GA	Body piping ø4 to Rc1/4	324
M4GB	Base piping ø4 to Rc1/4	334

3, 5-port valve
Cylinders of ø20 to ø160

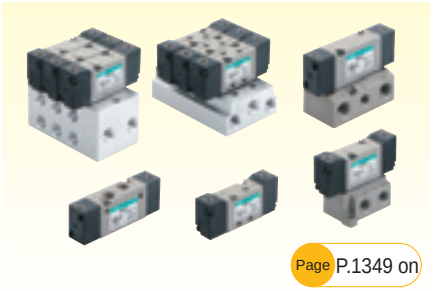

Page P.1349 on

4K (pneumatic valve)

Model No.	Specifications/port size	Page
Discrete valve		
3KA1 4KA	Body piping M5 to ø12	1350
4KB	Sub-plate piping Rc1/8 to Rc1/2	1356
Manifold		
M3KA1 M4KA	Body piping M5 to ø12	1350
M4KB	Sub-plate piping M5 to ø12	1356

5-port valve
Cylinders of ø10 to ø250

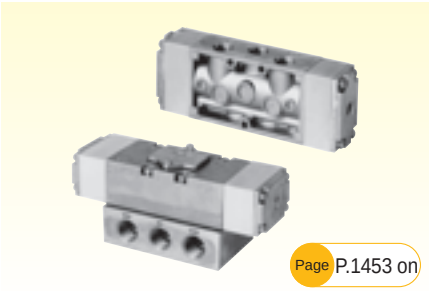

Page P.1453 on

4F (pneumatic valve)

Model No.	Specifications/port size	Page
Discrete valve		
4F0 to 3	Body piping	1454
4F4 to 7	Sub-plate piping	
Manifold		
(A)M4F0 to 3	Body piping	1454
M4F4 to 7	Sub-plate piping	

Manual selector valve

Manual override switching 4-port valve
Cylinders of ø20 to ø160

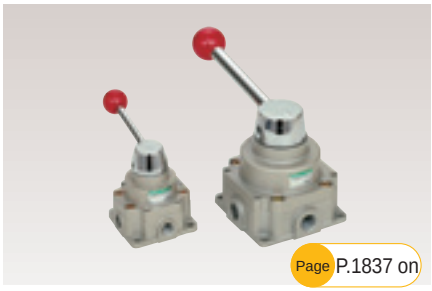

Page P.1837 on

Slide valve, manual switching valve

HMV/HSV

Model No.	Port size	Page
HMV	Miniature Rc1/4	1840
HSV	Standard Rc1/4 to 3/4	1840

Related products

With push-in fitting

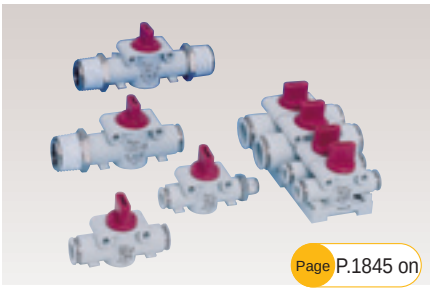

Page P.1845 on

Quick valve

2QV/3QV

Model No.	Port size	Page
2QV	2-way valve	1846
3QV	3-way valve	

ø25 to ø125 cylinder



Page P.1855 on

Shock absorbing valve

SKH

Model No.	Specifications	Page
SKH	Variable speed unit	1858
SKH	Deceleration unit	
SKH	Single-side deceleration unit	

Related products



Page P.1875 on

Silencer

Series	Piping bore size	Page
Metering valve with silencer		
SMW2	R1/8, 1/4	1878
FMS	M5	1880
SMW	R3/8, 1/2	
Small bore size		
SL	M5	1882
Resin body		
SLW	R1/8, 1/4, 3/8, 1/2	1882
SLW-*A-H	R1/4, 3/8, 1/2	1884
Large flow rate/small bore size/resin body		
SLW-*L	R1/4, 3/8	1885
High noise reduction/compact		
SLW-*S	R1/8, 1/4	1886
	R3/4	1887
Push-in		
SLW-H	R1/4, 3/8, 1/2	1888
Miniature		
SLM	M3, M5	1889
Aluminum body		
SL	R1/4 to 2	1890
Outdoor Series NEW		
SL-W	Rc1/4, 3/8, 1/2	1892
Exhaust cleaner		
FA*31	Rc3/8 to 2	1896

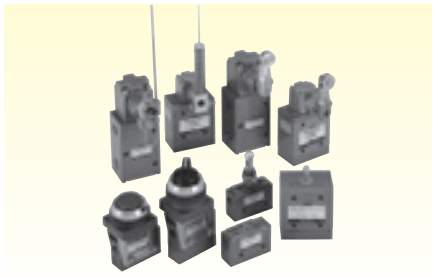

Total air systems
[Total air systems]

Model No.	Specifications/port size	Page
Detector (mechanical valve)		1901
MS	Small Rc1/8, ø4	
MM	Medium Rc1/1/8, ø4	
MAVL	Large Rc1/4	
Circuit device (logic valve)		
ø4		

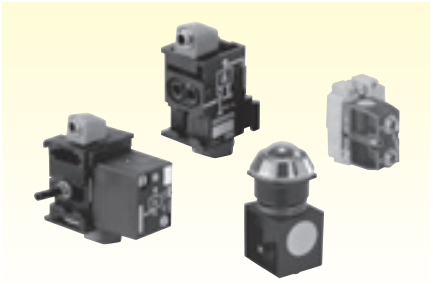

Total air systems
[Gamma system]

	Page
PLC components	1943
Signal control components	

Serial transmission system

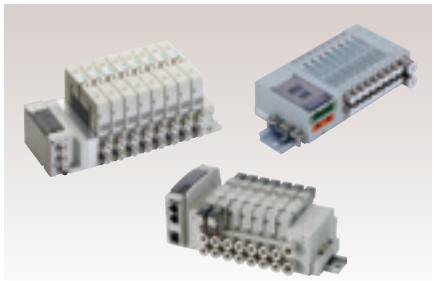

Model No.	Specifications	Page
OPP2	Degree of protection (IP64)	Intro Page 31
OPP3	Flat cable compatible device unit	
OPP4	Thin shape	
OPP5	Degree of protection (IP65) I/O block compatible	
OPP6	Miniature 32 point compatible	
NEW OPP7	Thin 32 point compatible	
NEW OPP8	Thin 32 point compatible (IP65)	

Recommended alternative products

Production of the series below has been discontinued.
Select recommended alternative products instead.

Discontinued	Recommended alternative product
■ 3, 5-port pilot operated valve (small pneumatic valve) **4SA1/4SB1** Series	■ Pilot operated 3, 5-port valve **4G R** Series
■ Direct acting 3, 5-port valve **FS/FD** Series	■ Pilot operated 5-port valve **4F** Series
■ Pilot operated 5-port valve (ISO valve) **CMF** Series	■ Pilot operated 5-port valve (ISO valve) **GMF** Series
■ Pilot operated 3, 5-port valve **4G** Series	■ Pilot operated 3, 5-port valve **4G R** Series
■ Pilot operated 4, 5-port valve **4TB** Series	■ Pilot operated 3, 5-port valve (plug-in manifold) **W4G** Series
■ Pilot operated 5-port valve **4L2** Series	■ Pilot operated 3, 5-port valve (plug-in manifold) **W4G** Series

New products

The new series below are now available.

■ Poppet 3-port valve

3QE/3QB Series

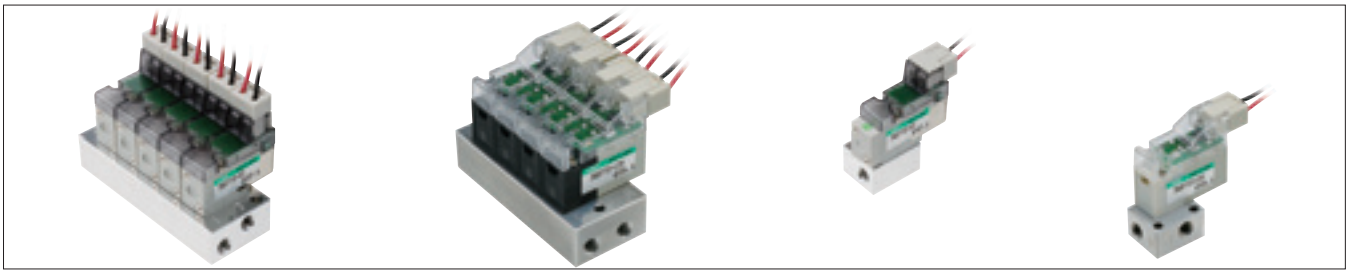

■ Intrinsically safe explosion-proof pilot operated 3, 5-port valve

4GD/4GE Series

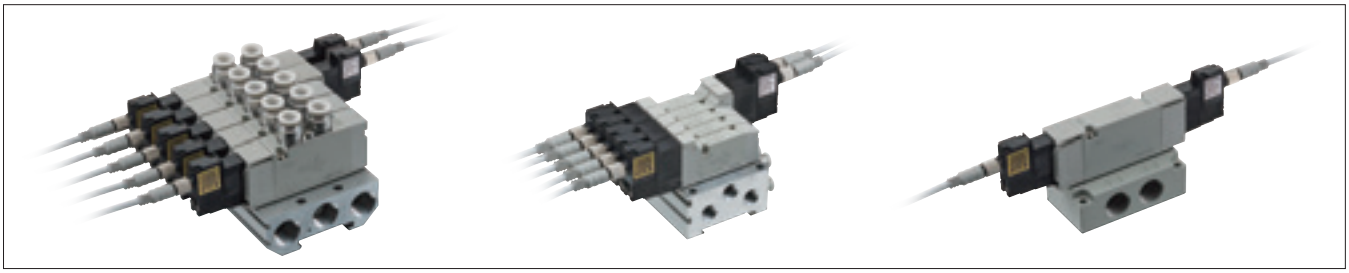

■ Pilot operated 3, 5-port valve

4GA/B/4GD/ER Series

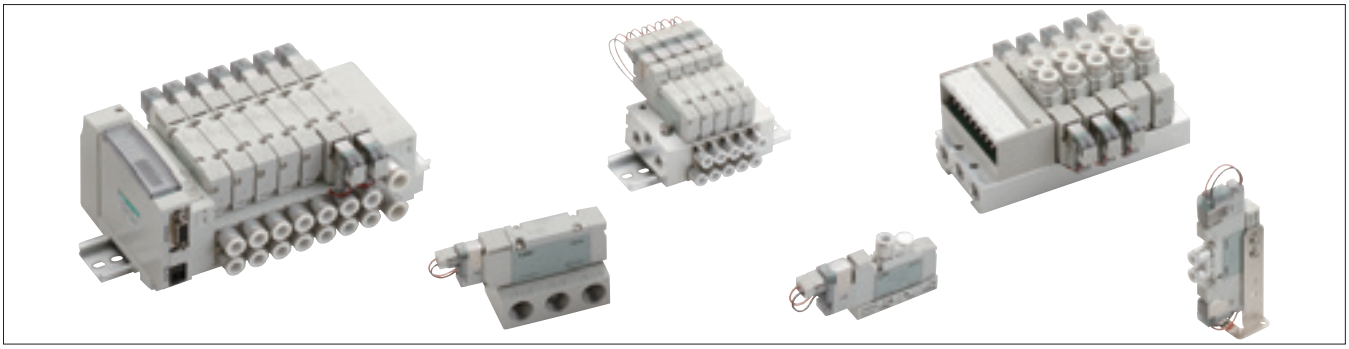

■ 3QR negative pressure switching unit

MV3QRA1/MV3QRB1 Series

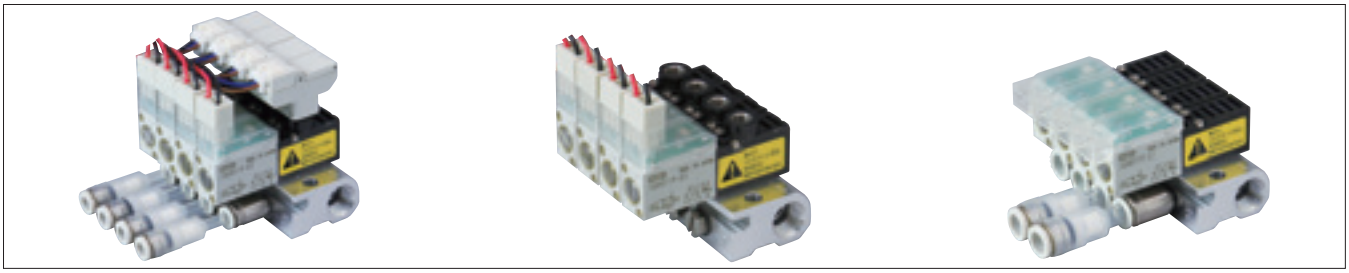

■ Pilot operated explosion-proof 5-port valve

4F0EX** Series

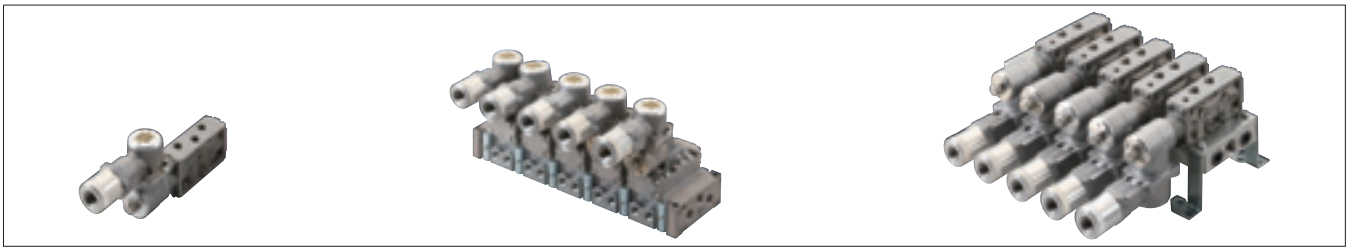

Guide to CKD's CAD data

How to use CKD's CAD data

CKD's CAD data is provided as follows for your use in CAD design.

2D CAD data



Types of compatible CAD
- DXF
- Dedicated CAD types

3D CAD data

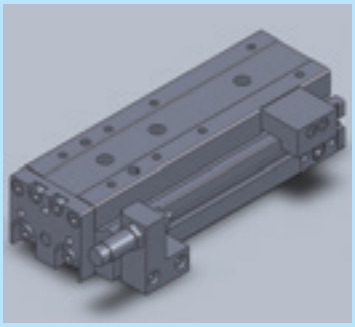

Types of compatible CAD
- DXF
- IGES
- SAT
- Parasolid
- Dedicated CAD types

Homepage

Catalog PDFs and CAD data of CKD products are available for download.

https://www.ckd.co.jp/en/

For PDF and DXF data of the general catalogs

CKD Website Component Products > Materials: Download digital catalogs/catalog PDFs

For PDF and DXF data of new products

CKD Website Component Products > Search for a product from the product list

For 2D/3D CAD data

CKD Website Component Products > Materials: Download 2D CAD data/3D CAD data

Guide to the model selection system

How to use the model selection system

The CKD system supports selection of the following items. For your use during model selection and design.

Available on our website

This system is used to select products according to your application and working conditions.



*Downloading Software may not be possible due to your security settings. If that is the case, contact CKD.

Selection results are linked with catalog PDFs and CAD data!

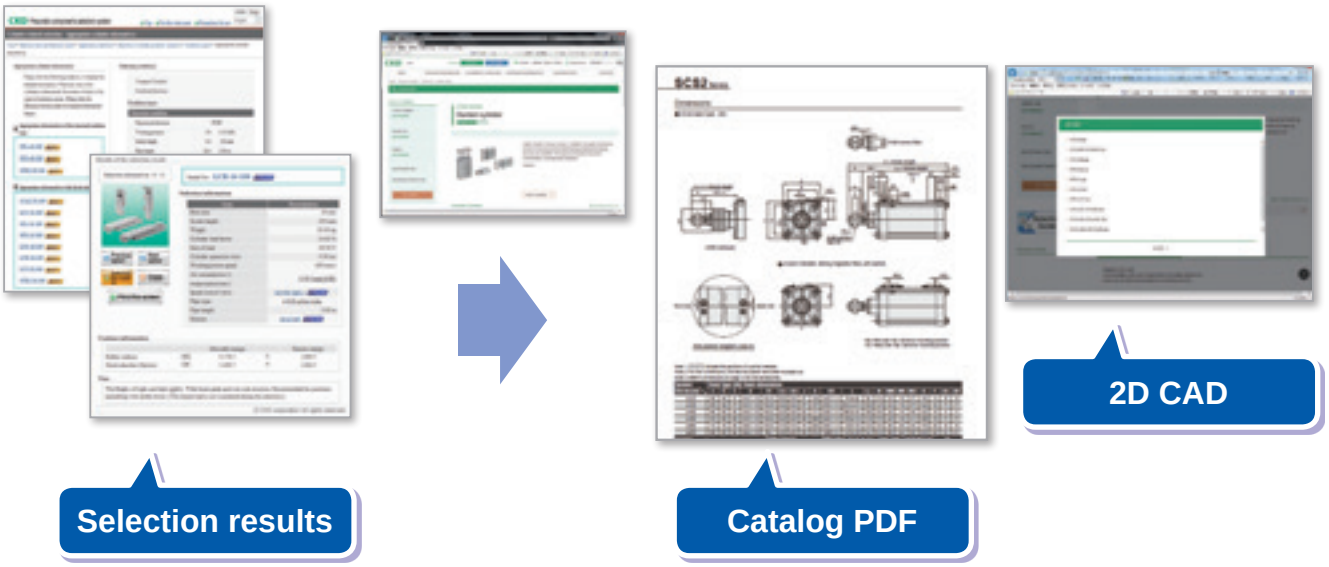

Registration not required - available at any time!

A variety of services such as CKD product catalogs, PDFs, CAD data, and model selection are available. Feel free to try them.

https://www.ckd.co.jp/en/

3 Search by flow characteristics C

Ideal model with flow characteristics C can be selected.

Port	Series	Wiring method: Single unit	Wiring method: Manifold: Individual wiring	Wiring method: Manifold: Reduced wiring	Model No.	Port size	Flow characteristics C [dm³/(bar)] / Eff. X-sectional area (mm²)
							0 / 0
							0.2 / 1
							0.4 / 2
							0.6 / 3
2-port	Pilot operated 2-port miniature pneumatic valve P512* B512* M512* B*P512* N*P512*	●			P512*	-	
		●			B512*	M5, Rc1/8	
		●			M512*	M5	
			●		B*P512*	M5, Rc1/8	
			●		N*P512*	ø4 Push-in fitting	
3-port	Direct acting 3-port small pneumatic valve 3M Series	●			3MA0	ø4 Barbed fitting (M3)	
		●			3MB0	M3	
			●		M3MA0	ø4 Barbed fitting (M5)	
			●		M3MB0	M3, M5 ø4 Push-in fitting ø4, ø6 Barbed fitting	
	Pilot operated 3-port miniature pneumatic valve P513* B513* M513* B*P513* N*P513*	●			P513*	-	
		●			B513*	M5x0.8, Rc1/8	
		●			M513*	M5	
			●		B*P513*	M5, Rc1/8	
			●		N*P513*	ø4 Push-in fitting	
	Direct acting 3-port valve 3QE Series	●			3QE1	M5	
			●		M3QE1	M5	
			●		M3QZ1	M5	
	Direct acting 3-port valve 3QB Series	●			3QB1	M5	
			●		M3QB1	M5	
	Direct acting 3-port valve 3QR Series	●			3QRA1	M5	
		●			3QRB1	M5	
			●		M3QRA1	M5, Rc1/8	
			●		M3QRB1	M5, Rc1/8	
	Direct acting 3-port valve MV3QR Series		●		MV3QRA1	M5 ø4, ø6 Push-in fitting	
			●		MV3QRB1	M5 ø4, ø6 Push-in fitting	
	Direct acting 3-port pneumatic valve 3P Series	●			3PA1	M5 ø4, ø6 Push-in fitting	
		●			3PA2	Rc1/8 ø6, ø8 Push-in fitting	
		●			3PB1	Rc1/8	
		●			3PB2	Rc1/8, Rc1/4	
			●		M3PA1	M5 ø4, ø6 Push-in fitting	
			●		M3PA2	Rc1/8 ø6, ø8 Push-in fitting	
			●		M3PB1	Rc1/8, ø4, ø6 Push-in fitting	
			●		M3PB2	Rc1/8, ø6, ø8 Push-in fitting	

*1: Effective cross-sectional area S and sonic conductance C are converted as S ≈ 5.0 x C.
*2: The port sizes listed are representative examples.

0.8	1.0	1.2	1.4	2.0	4.0	6.0	8.0	10.0	12.0	16.0	20.0	32.0	Page
4	5	6	7	10	20	30	40	50	60	80	100	160	
													1633
													1591
													1633
													1546
													1552
													1558
													1576
	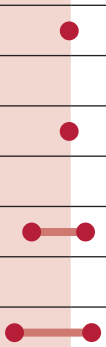												1607

3 Search by flow characteristics C

Ideal model with flow characteristics C can be selected.

Port	Series	Wiring method: Single unit	Wiring method: Manifold: Individual wiring	Wiring method: Manifold: Reduced wiring	Model No.	Port size	Flow characteristics C [dm³/(bar)] 0 0.2 0.4 0.6 / Eff. X-sectional area (mm²) 0 1 2 3
3-port	Pilot operated 3-port valve MN3E Series			●	MN3E00	M3 ø1.8, ø3, ø4	
			●	●	MN3E0	M5 ø1.8, ø4, ø6 Push-in fitting	
			●	●	Two 3-port valves integrated MN3E0	M5 ø1.8, ø4, ø6 Push-in fitting	
	Pilot operated 3-port pneumatic valve 4K Series	●			3KA1	M5 ø4, ø6 Push-in fitting	
			●		M3KA1	M5 ø4, ø6 Push-in fitting	
	Pilot operated 3-port pneumatic valve MN4S0 Series		●	●	MN3S0 MT3S0	M5 ø4, ø6 Push-in fitting	
			●	●	Two 3-port valves integrated MN3SO MT3SO	M5 ø4, ø6 Push-in fitting	
	Pilot operated 3-port valve 4G Series	●			3G$^{A}_{D}$1	M5 ø1.8, ø4, ø6 Push-in fitting	
		●			3G$^{A}_{D}$2	Rc1/8,1/8NPT,G1/8 ø4, ø6, ø8 Push-in fitting	
		●			3G$^{A}_{D}$3	Rc1/4, 1/4NPT, G1/4 ø6, ø8, ø10 Push-in fitting	
			●	●	M3G$^{A}_{D}$1	M5 ø1.8, ø4, ø6 Push-in fitting	
			●	●	M3G$^{A}_{D}$2	Rc1/8, 1/8NPT, G1/8 ø4, ø6, ø8 Push-in fitting	
			●	●	M3G$^{A}_{D}$3	Rc1/4, 1/4NPT, G1/4 ø6, ø8, ø10 Push-in fitting	
			●	●	MN3G$^{A}_{D}$1	M5 ø1.8, ø4, ø6 Push-in fitting	
			●	●	MN3G$^{A}_{D}$2	Rc1/8, 1/8NPT, G1/8 ø4, ø6, ø8 Push-in fitting	
	Pilot operated 3-port valve W4G2 Series			●	MW3GA2	Rc1/8 ø4, ø6, ø8 Push-in fitting	
	Intrinsically safe explosion-proof pilot operated 3-port valve 3GD/E EJ Series	●			3GD1	M5 ø1.8, ø4, ø6 Push-in fitting	
		●			3GD2	Rc1/8 ø4, ø6, ø8 Push-in fitting	
			●		M3GD1	M5 ø1.8, ø4, ø6 Push-in fitting	
			●		M3GD2	Rc1/8 ø4, ø6, ø8 Push-in fitting	
		●			3GE1	Rc1/8	
		●			3GE2	Rc1/4	
			●		M3GE1	M5 ø1.8, ø4, ø6 Push-in fitting	
			●		M3GE2	Rc1/8 ø4, ø6, ø8 Push-in fitting	
	Large flow rate 3-port valve NP Series	●			NP13 NP14 NAP11 NVP11	Rc3/8 to Rc2	

*1: Effective cross-sectional area S and sonic conductance C are converted as S ≈ 5.0 x C.
*2: The port sizes listed are representative examples.

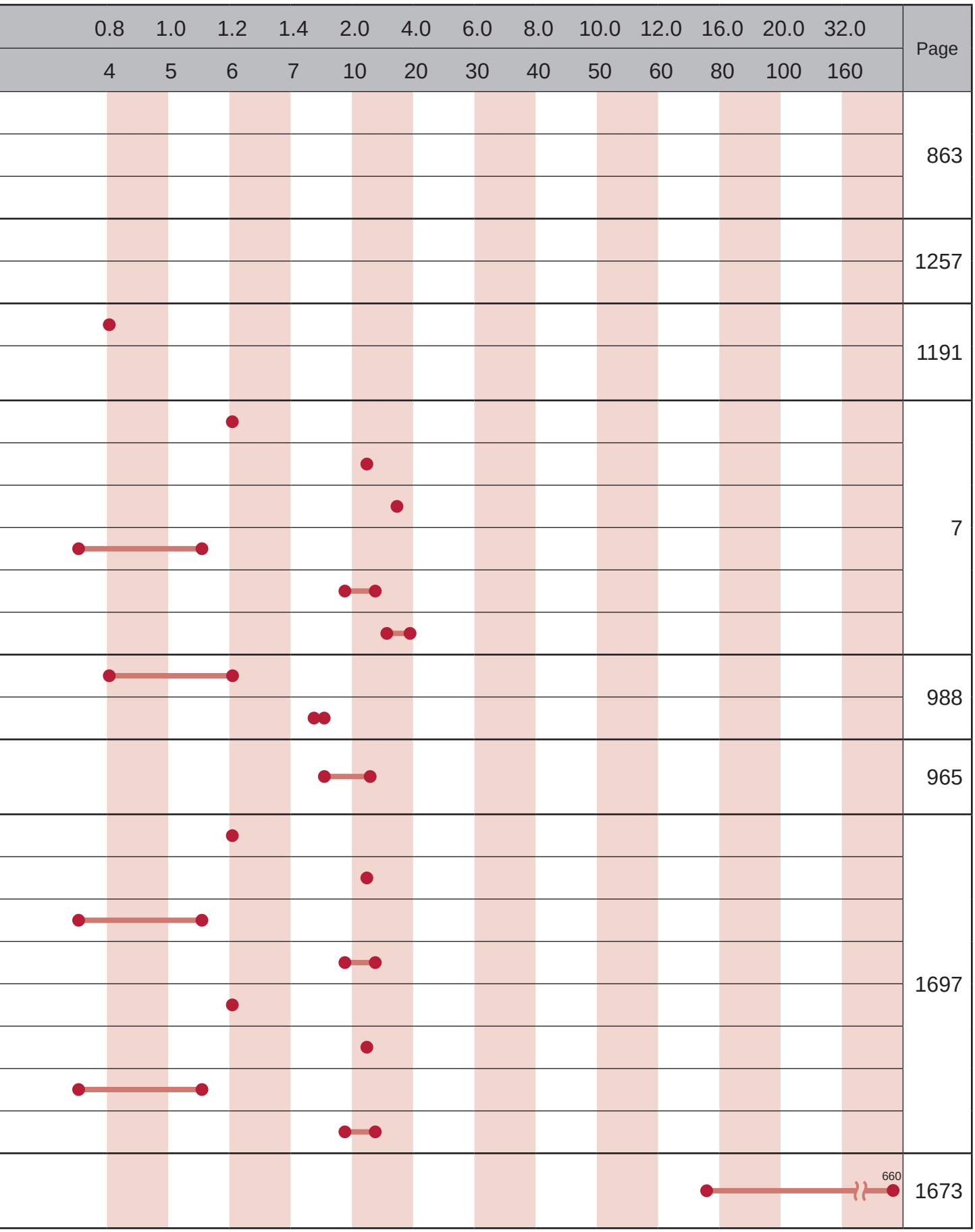

3 Search by flow characteristics C

Ideal model with flow characteristics C can be selected.

Port	Series	Wiring method: Single unit	Wiring method: Manifold: Individual wiring	Wiring method: Manifold: Reduced wiring	Model No.	Port size
4, 5-port valve	Pilot operated 5-port miniature pneumatic valve P514* B514* W2P513* B*P514* N*P514*	●			W2P513*	M5
		●			P5142	_
		●			B5142	M5
			●		B*P5142	M5 Rc1/8
			●		N*P5142	ø4 Push-in fitting
	Pilot operated 5-port small pneumatic valve 4S0 Series	●			4SA0	M3
						ø4 Barbed fitting
		●			4SB0	M5
			●		M4SA0	M3
						ø4 Barbed fitting
			●	●	M4SB0	M5 ø4 Push-in fitting ø4, ø6 Barbed fitting
	Pilot operated 4-port valve MN4E Series			●	MN4E00	M3 ø1.8, ø3, ø4
			●	●	MN4E0	M5 ø1.8, ø4, ø6 Push-in fitting
	Pilot operated 4-port pneumatic valve MN4S0 Series		●	●	MN4S0	M5 ø4, ø6 Push-in fitting
			●	●	MT4S0	
	Pilot operated 5-port valve 4G Series	●			$4G^{A}_{D}1$	M5 ø1.8, ø4, ø6 Push-in fitting
		●			$4G^{A}_{D}2$	Rc1/8, 1/8NPT, G1/8 ø4, ø6, ø8 Push-in fitting
		●			$4G^{A}_{D}3$	Rc1/4, 1/4NPT, G1/4 ø6, ø8, ø10 Push-in fitting
		●			$4G^{A}_{D}4$	Rc3/8, 3/8NPT, G3/8 ø8, ø10, ø12 Push-in fitting
			●	●	$M4G^{A}_{D}1$	M5 ø1.8, ø4, ø6 Push-in fitting
			●	●	$M4G^{A}_{D}2$	Rc1/8, 1/8NPT, G1/8 ø4, ø6, ø8 Push-in fitting
			●	●	$M4G^{A}_{D}3$	Rc1/4, 1/4NPT, G1/4 ø6, ø8, ø10 Push-in fitting
			●	●	M4GA4	Rc3/8, 3/8NPT, G3/8 ø8, ø10, ø12 Push-in fitting
		●			$4G^{B}_{E}1$	Rc1/8, 1/8NPT, G1/8
		●			$4G^{B}_{E}2$	Rc1/4, 1/4NPT, G1/4
		●			$4G^{B}_{E}3$	Rc1/4, 1/4NPT, G1/4 Rc3/8, 3/8NPT, G3/8
			●	●	4GB4	Rc3/8, 3/8NPT, G3/8 Rc1/2, 1/2NPT, G1/2
			●	●	$M4G^{B}_{E}1$	M5 ø1.8, ø4, ø6 Push-in fitting
			●	●	$M4G^{B}_{E}2$	Rc1/8, 1/8NPT, G1/8 ø4, ø6, ø8 Push-in fitting
			●	●	$M4G^{B}_{E}3$	Rc1/4, 1/4NPT, G1/4 ø6, ø8, ø10 Push-in fitting
			●	●	M4GB4	1/4(RC, NPT, G), 3/8(RC, NPT, G), 1/2(RC, NPT, G) ø8, ø10, ø12 push-in fitting

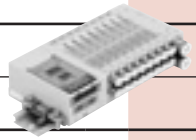

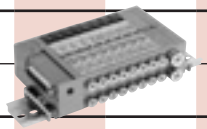

Flow characteristics C [dm³/(bar)]: 0 | 0.2 | 0.4 | 0.6

Eff. X-sectional area (mm²): 0 | 1 | 2 | 3

*1: Effective cross-sectional area S and sonic conductance C are converted as S ≈ 5.0 x C.
*2: The port sizes listed are representative examples.

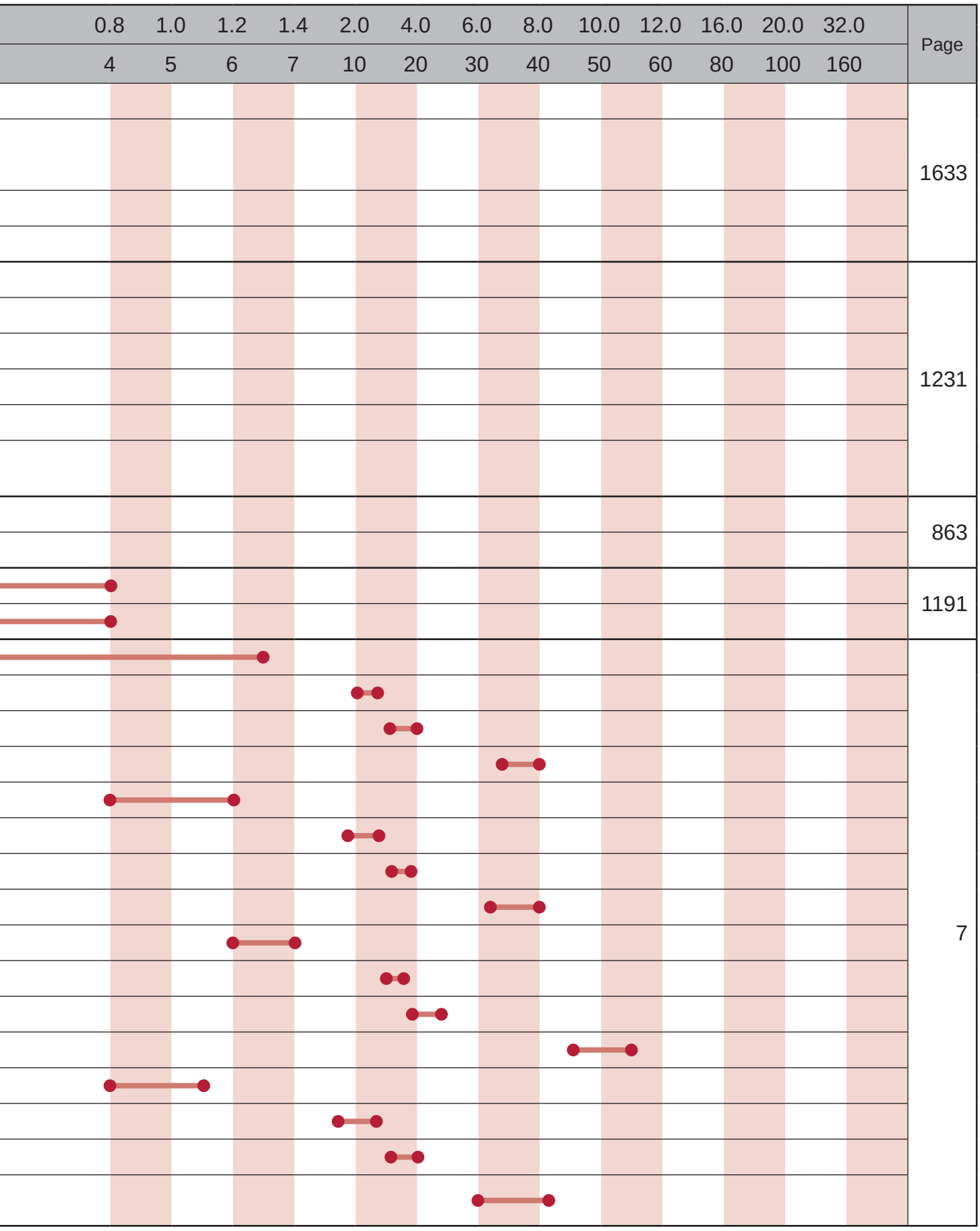

3 Search by flow characteristics C

Ideal model with flow characteristics C can be selected.

Port	Series	Wiring method: Single unit	Wiring method: Manifold: Individual wiring	Wiring method: Manifold: Reduced wiring	Model No.	Port size	Flow characteristics C [dm³/(bar)] 0 0.2 0.4 0.6 / Eff. X-sectional area (mm²) 0 1 2 3
4, 5-port valve	Pilot operated 5-port valve 4G Series 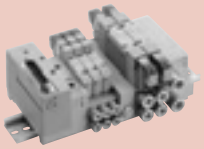		●	●	MN4G$^{A}_{D}$1	M5 ø4, ø6 Push-in fitting	
			●	●	MN4G$^{A}_{D}$2	Rc1/8, 1/8NPT, G1/8 ø4, ø6, ø8 Push-in fitting	
			●	●	MN4G$^{B}_{E}$1	ø4, ø6 Push-in fitting	
			●	●	MN4G$^{B}_{E}$2	ø4, ø6, ø8 Push-in fitting	
	Pilot operated 5-port valve W4G2 Series 	●			W4GB2	Rc1/4	
			●	●	MW4GA2	Rc1/8 ø4, ø6, ø8 Push-in fitting	
			●	●	MW4GB2	ø4, ø6, ø8 Push-in fitting	
			●	●	MW4GZ2	ø4, ø6, ø8 Push-in fitting	
	Pilot operated 5-port valve W4G4 Series 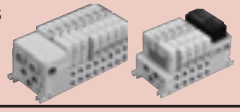	●			W4GB4	Rc1/4, Rc3/8 *3	
		●			W4GZ4	Rc1/4, Rc3/8 *3	
			●	●	MW4GB4	Rc1/4, Rc3/8 ø8, ø10, ø12 push-in *3	
	Pilot operated 5-port pneumatic valve 4K Series 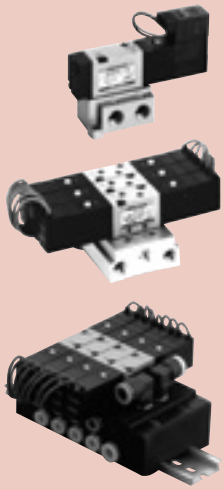	●			4KA1	M5 ø4, ø6 Push-in fitting	
		●			4KA2	Rc1/8 ø6, ø8 Push-in fitting	
		●			4KA3	Rc1/4 ø8, ø10 Push-in fitting	
		●			4KA4	Rc3/8 ø10, ø12 Push-in fitting	
			●		M4KA1	M5 ø4, ø6 Push-in fitting	
			●		M4KA2	Rc1/8 ø6, ø8 Push-in fitting	
			●		M4KA3	Rc1/4 ø8, ø10 Push-in fitting	
			●		M4KA4	Rc3/8 ø10, ø12 Push-in fitting	
		●			4KB1	Rc1/8	
		●			4KB2	Rc1/8, Rc1/4	
		●			4KB3	Rc1/4, Rc3/8	
		●			4KB4	Rc3/8, Rc1/2	
			●		M4KB1	M5, Rc1/8 ø6 Push-in fitting	
			●		M4KB2	Rc1/8, Rc1/4 ø6, ø8 Push-in fitting	
			●		M4KB3	Rc1/4, Rc3/8 ø8, ø10 Push-in fitting	
			●		M4KB4	Rc3/8, Rc1/2 ø10, ø12 Push-in fitting	
			●		MN4KB1	ø4, ø6, ø8 Push-in fitting	
			●		MN4KB2	ø6, ø8, ø10 Push-in fitting	

*1: Effective cross-sectional area S and sonic conductance C are converted as S ≈ 5.0 x C.
*2: The port sizes listed are representative examples.
*3: G threads and NPT threads are also compatible.

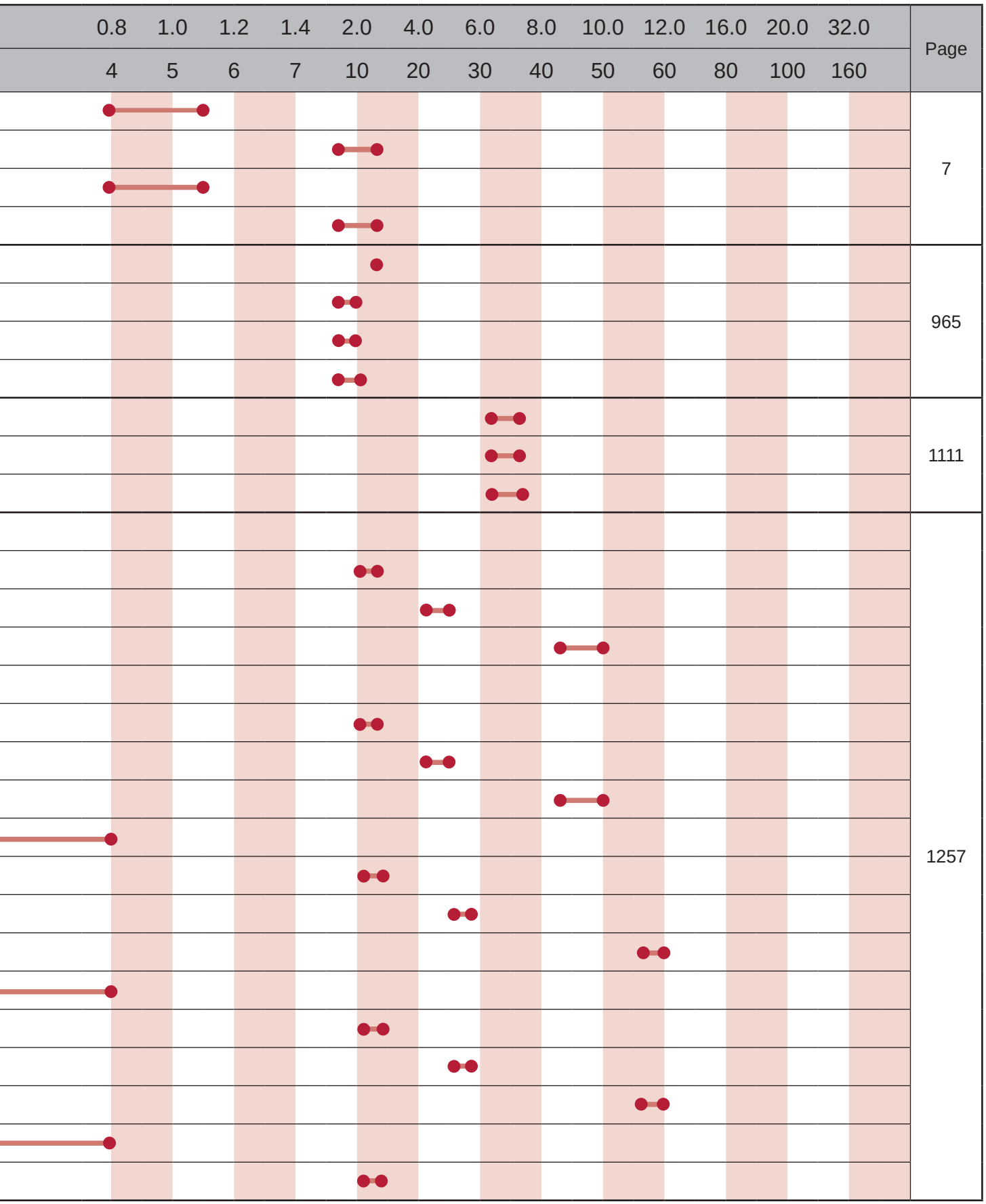

3 Search by flow characteristics C

Ideal model with flow characteristics C can be selected.

Port	Series	Wiring method: Single unit	Wiring method: Manifold: Individual wiring	Wiring method: Manifold: Reduced wiring	Model No.	Port size	Flow characteristics C [dm³/(bar)] 0 0.2 0.4 0.6 / Eff. X-sectional area (mm²) 0 1 2 3
4, 5-port valve	Pilot operated 5-port pneumatic valve 4F Series 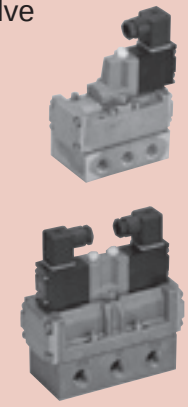	●			4F0	M5, Rp1/8	
		●			4F1	Rp1/8, Rp1/4	
		●			4F2	Rp1/4	
		●			4F3	Rp1/4, Rp3/8	
		●			4F4	Rc1/4, Rc3/8	
		●			4F5	Rc3/8, Rc1/2	
		●			4F6	Rc1/2, Rc3/4	
		●			4F7	Rc3/4, Rc1	
			●		M4F0	M5, Rp1/8	
			●		M4F1	Rp1/8, Rp1/4	
			●		M4F2	Rp1/4	
			●		M4F3	Rp1/4	
						Rp3/8	
			●		M4F4	Rc1/4	
			●		M4F5	Rc3/8	
			●		M4F6	Rc1/2	
			●		M4F7	Rc3/4	
	Pilot operated 5-port ISO valve PV5G/ PV5/ GMF Series 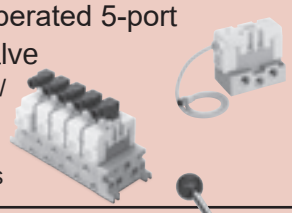	●			PV5G-6, PV5-6	Rc1/4, Rc3/8	
		●			PV5G-8, PV5-8	Rc3/8 to Rc3/4	
			●		GMF1	Rc1/4, Rc3/8	
			●		GMF2	Rc3/8, Rc1/2	
	Manual override switching 4-port valve HMV/HSV Series 	●			HMV	Rc1/4	
		●			HSV	Rc1/4 to Rc3/4	
Related products	Shock absorbing valve SKH Series 	●			SKH3$\frac{2}{5}$0	Rc3/8 / Rc1/2	
		●			SKH4$\frac{2}{5}$0	Rc3/8 / Rc1/2	
		●			SKH5$\frac{2}{5}$0	Rc3/8 / Rc1/2	
		●			SKH3$\frac{2}{5}$8	Rc1/4 / Rc3/8 / Rc1/2	
		●			SKH4$\frac{2}{5}$8	Rc1/4 / Rc3/8 / Rc1/2	
		●			SKH318	Rc1/4 / Rc3/8 / Rc1/2	
		●			SKH418	Rc1/4 / Rc3/8 / Rc1/2	

*1: Effective cross-sectional area S and sonic conductance C are converted as S ≈ 5.0 x C.
*2: The port sizes listed are representative examples.

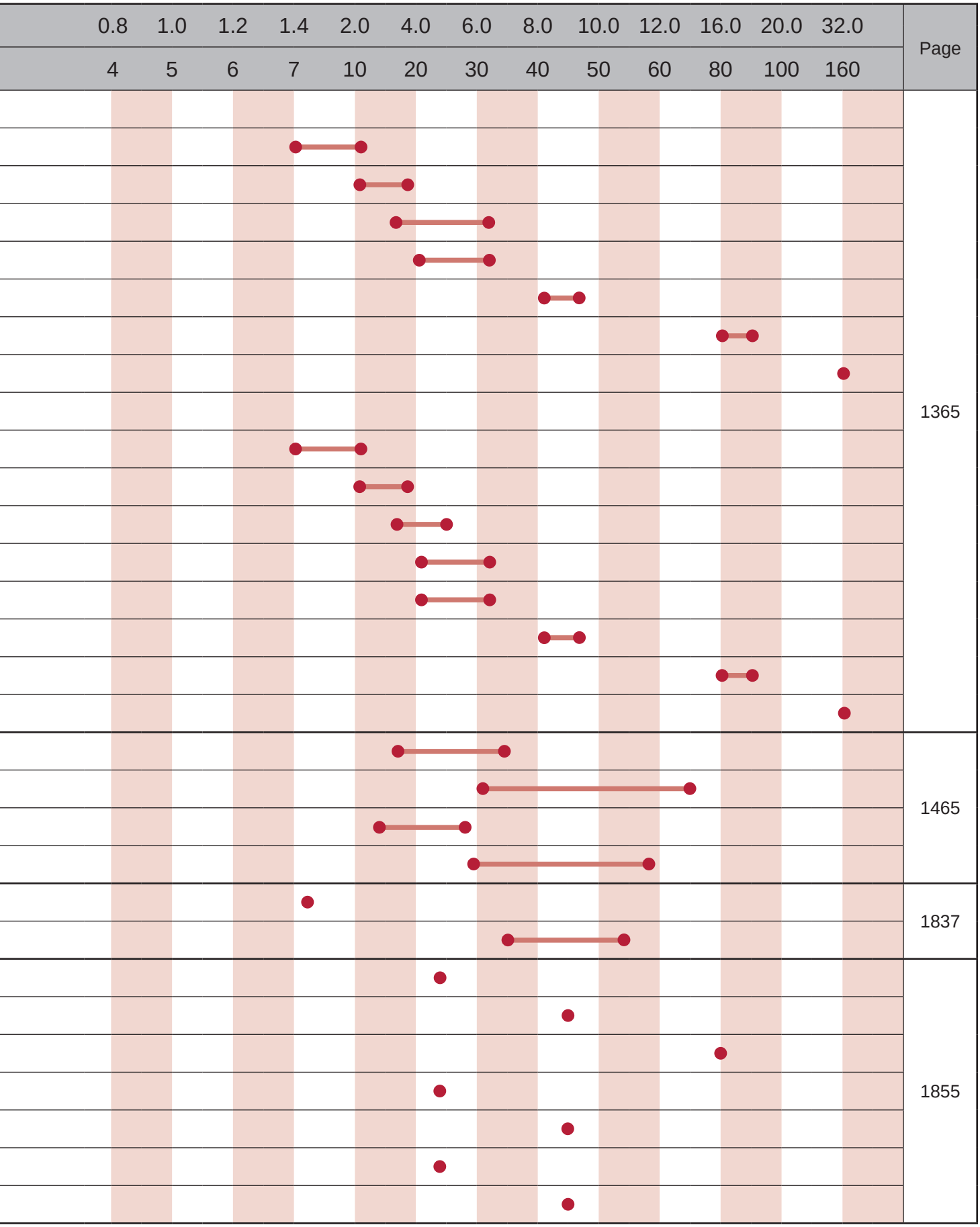

3 Search by flow characteristics C

Ideal model with flow characteristics C can be selected.

Port	Series	Wiring method: Single unit	Wiring method: Manifold: Individual wiring	Wiring method: Manifold: Reduced wiring	Model No.	Port size	Flow characteristics C [dm³/(bar)] / Effective cross-sectional area (mm²)
							0 / 0	0.2 / 1	0.4 / 2	0.6 / 3
4, 5-port	Intrinsically safe explosion-proof pilot operated 5-port valve 4GD/E EJ Series	●			4GD1	M5 ø1.8, ø4, ø6 push-in fitting	
		●			4GD2	Rc1/8 ø4, ø6, ø8 push-in fitting	
		●			4GD3	Rc1/4 ø6, ø8, ø10 push-in fitting	
		●			4GD4	Rc3/8 ø8, ø10, ø12 push-in fitting	
			●		M4GD1	M5 ø1.8, ø4, ø6 push-in fitting	
			●		M4GD2	Rc1/8 ø4, ø6, ø8 push-in fitting	
			●		M4GD3	Rc1/4 ø6, ø8, ø10 push-in fitting	
			●		M4GD4	Rc3/8 ø8, ø10, ø12 push-in fitting	
		●			4GE1	Rc1/8	
		●			4GE2	Rc1/4	
		●			4GE3	Rc1/4, Rc3/8	
		●			4GE4	Rc3/8, Rc1/2	
			●		M4GE1	M5 ø1.8, ø4, ø6 push-in fitting	
			●		M4GE2	Rc1/8 ø4, ø6, ø8 push-in fitting	
			●		M4GE3	Rc1/4 ø6, ø8, ø10 push-in fitting	
			●		M4GE4	Rc1/4, Rc3/8, Rc1/2 ø8, ø10, ø12 push-in fitting	
	Pressure and explosion-proof 5-port pneumatic valve 4F**0EX Series	●			4F3*0EX	Rp1/4, Rp3/8	
		●			4F4*0EX	Rc1/4, Rc2/8	
		●			4F5*0EX	Rc3/8, Rc1/2	
		●			4F6*0EX	Rc1/2, Rc3/4	
		●			4F7*0EX	Rc3/4, Rc1	
			●		M4F3*0EX	Rp1/4, Rp3/8	
			●		M4F4*0EX	Rc1/4	
			●		M4F5*0EX	Rc3/8	
			●		M4F6*0EX	Rc1/2	
			●		M4F7*0EX	Rc3/4	
	Pressure and explosion-proof 5-port pneumatic valve 4F**0E Series	●			4F3*0E	Rp1/4, Rp3/8	
		●			4F4*0E	Rc1/4, Rc2/8	
		●			4F5*0E	Rc3/8, Rc1/2	
		●			4F6*0E	Rc1/2, Rc3/4	
		●			4F7*0E	Rc3/4, Rc1	
			●		M4F3*0E	Rp1/4, Rp3/8	
			●		M4F4*0E	Rc1/4	
			●		M4F5*0E	Rc3/8	
			●		M4F6*0E	Rc1/2	
			●		M4F7*0E	Rc3/4	

*1: Effective cross-sectional area S and sonic conductance C are converted as S ≈ 5.0 x C.
*2: The port sizes listed are representative examples.

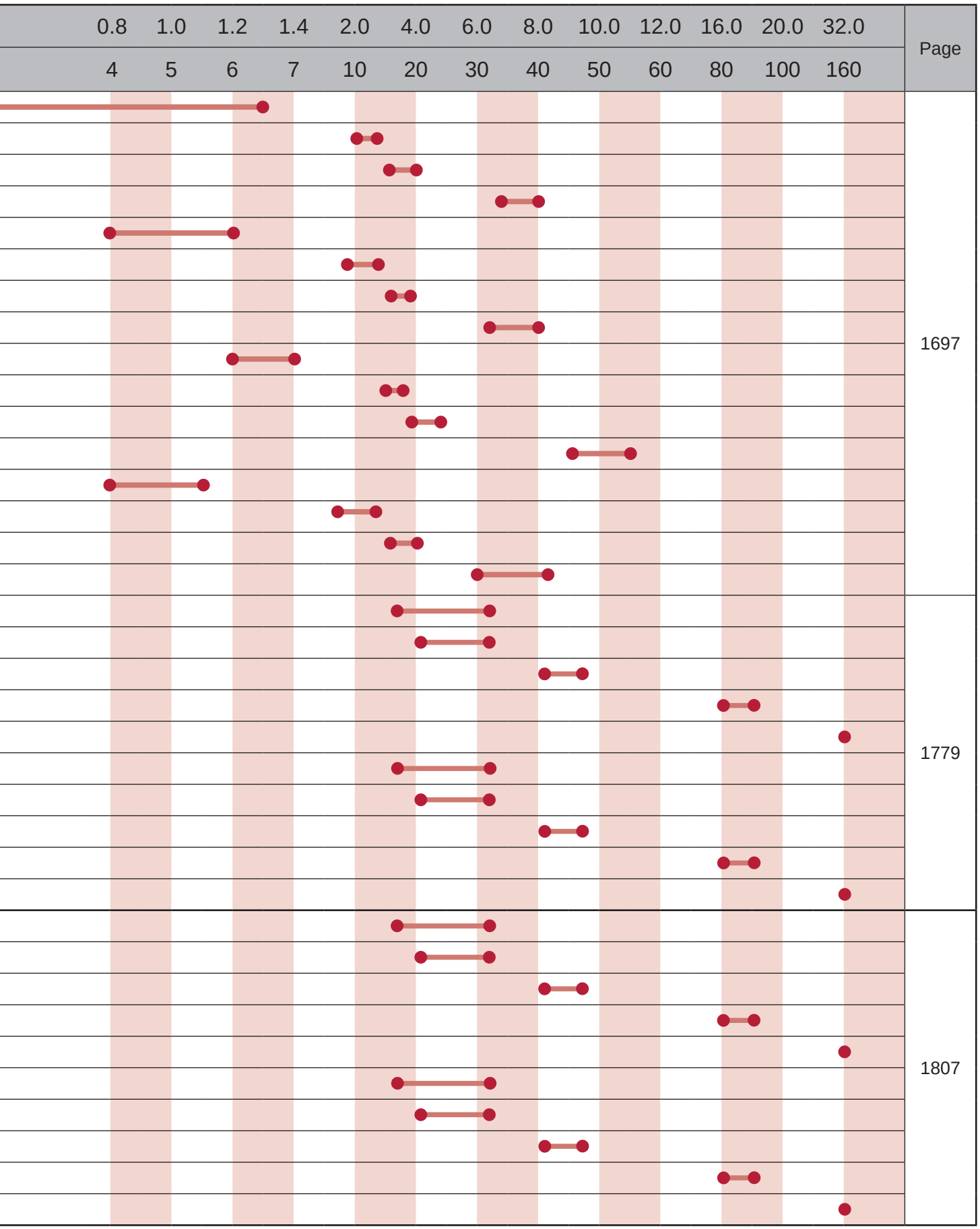

4 Search by specifications and variation

Individual wiring manifold

Series name		Manifold model No.	Flow characteristic C [dm³/(s·bar)]	Effective cross-sectional area (mm²)	Remarks	Page
4, 5-port valve						
Pilot operated soft spool valve	MN4E0 Series	MN4E0	0.5 to 0.54	-	One-sided solenoid type	896
	4S0 Series (small pneumatic valve)	M4SA0	-	0.9		1244
		M4SB0	0.29 to 0.32	-		
	4G Series	M4G$^{A}_{D}$	0.70 to 8.0	-		96/508
		M4G$^{B}_{E}$				112/520
		MN4G$^{A}_{D}$	0.71 to 2.3			230/614
		MN4G$^{B}_{E}$				238/622
	W4G2 Series	MW4GA2	1.7 to 2.3	-	One-sided solenoid/ plug-in type	976
		MW4GB2				980
		MW4GZ2				980
	W4G4 Series	MW4GB4	6.4 to 7.4	-	Plug-in type	1118
	MN4S0 Series (pneumatic valve)	MN4S0 MT4S0	0.57 to 0.80	-	One-sided solenoid type	1196
	4K Series (pneumatic valve)	M4KA	0.60 to 11	-		1298
		M4KB				1310
		MN4KB				1330
	4F Series (pneumatic valve)	(A)M4F0 M4F1 to M4F3	0.6 to 18	160 (4F7)		1410
		M4F4 to 7				1438
		M4F**E			Explosion-proof	1824
	PV5G/PV5/CMF Series (ISO valve)	GMF1	2.8 to 11.6	-		1484
		GMF2				1488
	4GD/E EJ Series (Intrinsically safe explosion-proof)	M4GD	0.70 to 8.4	-		1697
		M4GE	1.1 to 13.9			
2, 3-port valve						
Pilot operated soft spool valve	MN3E0 Series	MN3E0	0.54	-	One-sided	896
	3G Series	M3GA	0.70 to 2.5	-		96
		MN3GA	0.71 to 1.7			230
	MN3S0 Series (pneumatic valve)	MN3S0 MT3S0	0.80	-	One-sided solenoid type	1196
	3K Series (pneumatic valve)	M3KA	0.69	-		1298
Direct acting poppet valve	3M Series (small pneumatic valve)	M3MA0 M3MB0	-	0.1 to 0.5		1596
	3QE Series	M3QE1 M3QZ1	0.04 to 0.06	-		1546
	3QB Series	M3QB1	0.11 to 0.18	-		1552
	3QR Series	M3QRA M3QRB	0.30 to 0.40	-		1558
	3P Series (pneumatic valve)	M3PA M3PB	0.31 to 1.1	-		1620
Pilot operated poppet valve	P/M/B Series (Miniature pneumatic valve)	B*P51	0.09 to 0.15	-		1638
		N*P512/3/4				1660
Two 3-port valves integrated						
Pilot operated soft spool valve	MN3E0 Series	MN3E0	0.5	-	One-sided	896
	3G Series	M3G$^{A}_{D}$	0.66 to 1.7	-		96/508
		M3G$^{B}_{E}$				112/520
		MN3G$^{A}_{D}$				230/614
		MN3G$^{B}_{E}$				238/622
	MN3S0 Series (pneumatic valve)	MN3S0 MT3S0	0.50	-	One-sided solenoid type	1196

Note: Effective cross-sectional area S and sonic conductance C are converted as S ≈ 5.0 x C.

Reduced wiring manifolds

Series name		Manifold model No.	Flow characteristic C [dm³/(s·bar)]	Remarks	Page
4, 5-port valve					
Pilot operated soft spool valve	MN4E Series	MN4E00	0.32	One-sided solenoid type	872
		MN4E0	0.50 to 0.54		896
	4S0 Series (small pneumatic valve)	M4SB0	0.29 to 0.32		1248
	4G Series	M4G $^{A}_{D}$	0.70 to 8.0		136/534
		M4G $^{B}_{E}$			158/554
		MN4G $^{A}_{D}$	0.71 to 2.3		246/630
		MN4G $^{B}_{E}$			262/646
	W4G2 Series	MW4GA2	1.7 to 2.3	One-sided solenoid/ plug-in type	988
		MW4GB2			1010
		MW4GZ2			1010
	W4G4 Series	MW4GB4	6.4 to 7.4	Plug-in type	1128
	MN4S0 Series (pneumatic valve)	MN4S0 MT4S0	0.57 to 0.80	One-sided solenoid type	1196
3-port valve					
Pilot operated soft spool valve	MN3E Series	MN3E00	0.32	One-sided solenoid type	872
		MN3E0	0.54		896
	3G Series	M3G $^{A}_{D}$	0.70 to 2.5		136/534
		MN3G $^{A}_{D}$	0.71 to 1.7		246/630
	W3G2 Series	MW3GA2	1.7	One-sided solenoid type	988
	MN3S0 Series (pneumatic valve)	MN3S0 MT3S0	0.80	One-sided solenoid type	1196
Two 3-port valves integrated					
Pilot operated soft spool valve	MN3E Series	MN3E00	0.32	One-sided solenoid type	872
		MN3E0	0.50		896
	3G Series	M3G $^{A}_{D}$	0.66 to 1.7		136/534
		M3G $^{B}_{E}$			158/554
		MN3G $^{A}_{D}$			246/630
		MN3G $^{B}_{E}$			262/646
	MN3S0 Series (pneumatic valve)	MN3S0 MT3S0	0.50	One-sided solenoid type	1196

Note: Effective cross-sectional area S and sonic conductance C are converted as S ≈ 5.0 x C.

4 Search by specifications and variation

Reduced wiring device unit

PLC manufacturer	Communication protocol	Wiring block model No.	Device unit series	Incorporated valve
CC-Link Partner Association Mitsubishi Electric	CC-Link (ver1.10)	T6G1	OPP3 Series	MN4S0, MN4E, MN4G, M4G
		T7G1	OPP4 Series	MN4G
		T8G1/2/7	OPP5 Series	MW4G2
		T7G1/2	OPP6 Series	MN4E
		T8G1/2	OPP7 Series	M4G,MN4G
		T8GP1/2		
	CC-Link IEF Basic	T8EB1/2	OPP7 Series	M4G, MN4G
		T8EBP1/2		
ODVA OMRON Corporation	DeviceNet	T7D1	OPP4 Series	MN4G
		T8D1/2/7	OPP5 Series	MW4G2
		T7D1/2	OPP6 Series	MN4E
		T8D1/2	OPP7 Series	MN4G
		T7D1/2/7	OPP8 Series	MW4G
Japan Profibus Association SIEMENS Corporation	PROFIBUS-DP	T8P1/2	OPP7 Series	M4G, MN4G
		T8PP1/2		
	PROFINET	T8EP1/2 T8EPP1/2	OPP7 Series	M4G, MN4G
OMRON Corporation Beckhoff Automation	EtherCAT	T7EC1/2	OPP6 Series	MN4E
		T7ECT1/2		
		T8EC1/2	OPP7 Series	M4G, MN4G
		T8ECP1/2		
		T7EC1/2	OPP8 Series	MW4G
		T7ECP1/2		
ODVA TAG JAPAN	EtherNet/IP	T8EN1/2	OPP7 Series	M4G, MN4G
		T8ENP1/2		
SUNX	S-LINK V	T7N1/2	OPP6 Series	MN4E
Ontec	SAVENET	T7L1	OPP4 Series	MN4G

● For compatibility with other networks, contact CKD for details.

*1 When ordering a reduced wiring manifold, the wiring block model No. is indicated as follows.

(Example)MN4GA210- (Port size) - T7D1 (Option) - (Station No.) - (Voltage)

- Port size: M: Manifold, MN: Block manifold
- T7D1: Wiring block model No.

*2 The shape of the device unit is as follows.

OPP2	Degree of protection(IP65)

OPP3	Flat cable compatible device unit
OPP4	Thin shape

OPP5	Degree of protection(IP65), connector wiring
OPP6	Miniature 32 point compatible

Reduced wiring device unit (serial transmission)

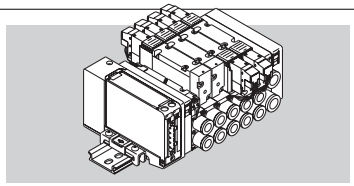

Serial transmission (OPP4)

- Thin device unit
- Easily connected/detached with the slot-in system.

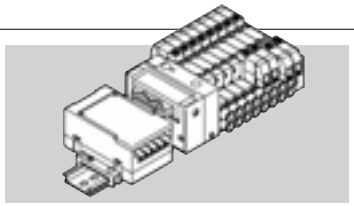

Serial transmission (OPP3)

- The valve and device unit can be easily connected with connectors.
- Low-profile device unit with height kept low. (At assembly)

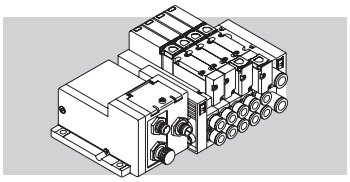

Serial transmission (OPP5)

- Dust-proof/jet-proof protective structure (IP65).
- Power supply wires and communication wires can be easily connected with connectors.

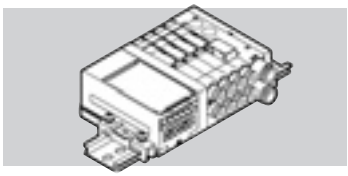

Serial transmission (OPP6)

- Compact close contact type
- Low-profile device unit with height kept the lowest in the series, compatible with up to 32 points.

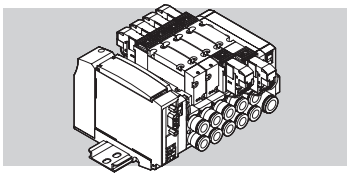

Serial transmission (OPP7)

- Thin device unit
- Easily connected/detached with the slot-in system.

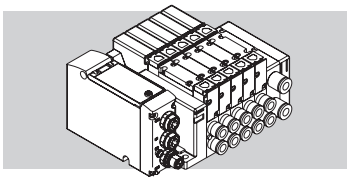

Serial transmission (OPP8)

- High speed EtherCAT communication supported
- A protective structure equivalent to IP65 rating has been prepared.

4 Search by specifications and variation

Reduced wiring block

Wiring method	Wiring block model No.	Incorporated valve model No.	Remarks	Incorporated valve Page
D sub-connector	T30/R (24-pin)	MN4E	*1) MW4G2 is not compatible with T50 and T52. *2) MN4SO is not compatible with T51 and T52.	863
Flat cable connector	T50/R (with power supply terminal 16 points)	MN4G, M4G		1
	T51/R (18-pin)	MW4G2 (*1)		965
	T52/R (8-pin)	MN4SO (*2)		1191
Multi-connector	T20 (16-pin)	MW4G2		965
Common terminal	T10/R (M3 screw system) T11/R (clamping system)	MN4G, M4G	*2) MW4G2 and MW4G4 are not compatible with T11.	1
		MW4G2 (*2)		965
		MW4G4 (*2)		1111
		MN4SO		1191
Intermediate wiring block	TM1A (10-pin) TM1C (5-pin) TM52 (8-pin)	MN4E	TM**: RITS connector TM52: Flat cable connector	863

Reduced wiring block

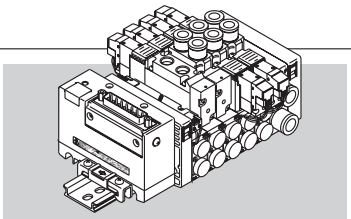

D sub-connector (T3*)

- Quick connections using cables with connectors
- Processing of relay terminal block and common wiring is not required

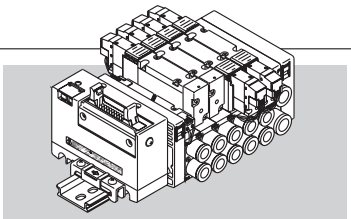

Flat cable connector (T5*)

- Quick connections using cables with connectors
- Processing of relay terminal block and common wiring is not required
- An amplification circuit embedded is also available

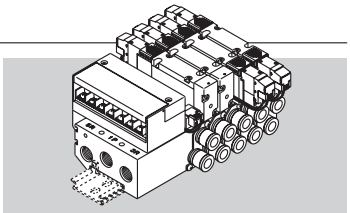

Common terminal block (T1*)

- Valve wiring only requires signal wires and a single common wire
- A relay terminal block is not required

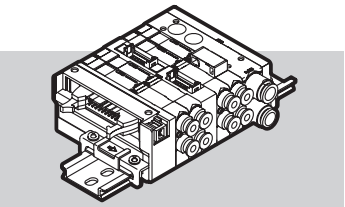

Intermediate wiring block (TM*)

- Reduced wiring connection to the center of the manifold is possible.
- 10P flat cable connector and 6P RITS connectors are available.
- No more trouble with insufficient control points.

Copper and PTFE free

Copper-based materials are not used.

Series name		Variation model No.	Flow characteristics C [dm³/(s·bar)]	Effective cross-sectional area (mm²)	Remarks	Page
4, 5-port valve						
Pilot operated poppet valve	P/M/B Series (Miniature pneumatic valve)	W2P513*-*-P6	0.12 to 0.15	-		1633
		P5142-*-P6	0.09			
		B5142-*-P6	0.09			
		B*P5142-*-P6	0.09			
		N*P5142-*-P6	0.09			
Pilot operated soft spool valve	4K Series (pneumatic valve)	4KA*-*-P6	0.60 to 11	-		1257
		4KB*-*-P6	063 to 13			
		M4KA*-*-P6	0.69 to 11			
		M4KB*-*-P6	0.60 to 9.4			
		MN4KB*-*-P6	0.60 to 3.1			
	4F Series (pneumatic valve)	4F*-*-P6	1.5 to 18	160(4F7)	(M)4F0 is not supported.	1365
		M4F*-*-P6				
Shock absorbing valve	SKH Series	SKH*-*-P6	4.1 to 16.3	-		1855
2, 3-port valve						
Pilot operated soft spool valve	3K Series (pneumatic valve)	3KA1*-*-P6	0.65	-		1257
		M3KA1*-*-P6	0.69			
Pilot operated poppet valve	P/M/B Series (Miniature pneumatic valve)	P512/3*-*-P6	0.1	-		1633
		M512/3*-*-P6	0.1			
		B512/3*-*-P6	0.1			
		B*P512/3*-*-P6	0.11 to 0.15			
		N*P512/3-*-P6	0.11 to 0.15			

*1: Effective cross-sectional area S and sonic conductance C are converted as S ≈ 5.0 x C.

*2: Other series are compatible as well. Contact CKD separately.

4 Search by specifications and variation

Main rubber parts used are ozone proof items

Ozone-proof specification product

Series name		Variation model No.	Flow characteristics C [dm³/(s·bar)]	Effective cross-sectional area (mm²)	Remarks	Page
4, 5-port valve						
Pilot operated soft spool valve	MN4E0 Series	MN4E0*-*-A-*	0.50 to 0.54	-	One-sided solenoid	863
	4S0 Series (small pneumatic valve)	4SA0*-*-P11	-	0.90		1231
		4SB0*-*-P11	0.29 to 0.33	-		
		M4SA0*-*-P11	-	0.90		
		M4SB0*-*-P11	0.29 to 0.32	-		
	4G Series	4G$^{A}_{D}$*-*-A-*	0.70 to 8.0	-		1
		4G$^{B}_{E}$*-*-A-*	1.1 to 11			
		M4G$^{A}_{D}$*-*-A-*	0.70 to 8.0			
		M4G$^{B}_{E}$*-*-A-*	0.70 to 8.3			
		MN4G$^{A}_{D}$*-*-A-*	0.71 to 2.3			
		MN4G$^{B}_{E}$*-*-A-*	0.71 to 2.2			
	W4G2 Series	W4GB2*-*-A-*	2.1 to 2.5	-	One-sided solenoid	965
		MW4GA2*-*-A-*	1.7 to 2.3			
		MW4GB2*-*-A-*	1.7 to 2.3			
		MW4GZ2*-*-A-*	1.7 to 2.3			
	W4G4 Series	W4GB4*-*-A-*	6.4 to 7.3	-		1111
		W4GZ4*-*-A-*				
		MW4GB4*-*-A-*	6.4 to 7.4			
	MN4S0 Series (pneumatic valve)	MN4S0*-*-P11 MT4S0*-*-P11	0.57 to 0.80	-	One-sided solenoid	1191
	4K Series (pneumatic valve)	4KA*-*-P11	0.60 to 11	-		1257
		4KB*-*-P11	0.63 to 13			
		M4KA*-*-P11	0.69 to 11			
		M4KB*-*-P11	0.60 to 9.4			
		MN4KB*-*-P11	0.60 to 3.1			

● Ozone-proof components are available as a custom order. (However, the MN4E0 series, 4G series, W4G2 series, and W4G4 series are available as options.)
Note: Effective cross-sectional area S and sonic conductance C are converted as S ≈ 5.0 x C.

Main rubber parts used are ozone proof items

Ozone-proof specification product

Series name		Variation model No.	Flow characteristics C [dm³/(s·bar)]	Effective cross-sectional area (mm²)	Remarks	Page
3-port valve						
Pilot operated soft spool valve	MN3E0 Series	MN3E0*-*-A-*	0.54		One-sided solenoid	863
	3G Series	3G$^{A}_{D}$*-*-A-*	0.70 to 3.9	-		1
		M3G$^{A}_{D}$*-*-A-*	0.66 to 3.3			
		MN3G$^{A}_{D}$*-*-A-*	0.68 to 2.3			
	W3G2 Series	MW3GA2*-*-A-*	1.7 to 2.3	-	One-sided solenoid	965
	MN3S0 Series (pneumatic valve)	MN3S0-*-*-P11	0.80	-	One-sided solenoid	1191
		MT3S0-*-*-P11				
	3K Series (pneumatic valve)	3KA*-*-P11	0.65	-		1257
		M3KA*-*-P11	0.69			
Direct acting poppet valve	3M Series (small pneumatic valve)	3MA0*-*-P11	-	0.1 to 0.15		1591
		3MB0*-*-P11				
		M3MA0*-*-P11				
		M3MB0*-*-P11				
	3P Series (pneumatic valve)	3PA*-*-P11	0.34 to 1.1	-		1607
		3PB*-*-P11	0.33 to 1.0			
		M3PA*-*-P11	0.37 to 1.1			
		M3PB*-*-P11	0.32 to 0.93			
Two 3-port valves integrated						
Pilot operated soft spool valve	MN3E0 Series	MN3E0*-*-A-*	0.50	-	One-sided solenoid	863
	3G Series	3G$^{A}_{D}$*-*-A-*	0.66 to 1.8	-		1
		3G$^{B}_{E}$*-*-A-*	0.92 to 1.7			
		M3G$^{A}_{D}$*-*-A-*	0.66 to 1.7			
		M3G$^{B}_{E}$*-*-A-*	0.67 to 1.6			
		MN3G$^{A}_{D}$*-*-A-*	0.68 to 1.6			
		MN3G$^{B}_{E}$*-*-A-*	0.66 to 1.6			

● Ozone-proof components are available as a custom order. (However, the MN4E0 series, 4G series, and W4G2 series are available as options.)

Note: Effective cross-sectional area S and sonic conductance C are converted as S ≈ 5.0 x C.

4 Search by specifications and variation

Specifications for rechargeable battery

Pneumatic components exclusively for materials which can be used in the rechargeable battery manufacturing process.

Series name		Variation model No.	Flow characteristics C [dm³/(s·bar)]	Remarks	Page
4, 5-port valve					
Pilot operated soft spool valve	4G Series	4G$^{A}_{D}$*-*-P4	0.66 to 4.0		CC-1226A
		4G$^{B}_{E}$*-*-P4	1.0 to 4.2		
		M4G$^{A}_{D}$*-*-P4	0.66 to 3.3		
		M4G$^{B}_{E}$*-*-P4	0.67 to 3.3		
		MN4G$^{A}_{D}$*-*-P4	0.68 to 2.3		
		MN4G$^{B}_{E}$*-*-P4	0.66 to 2.2		
	W4G2 Series	W4GB2*-*-P40	2.1 to 2.5	One-sided solenoid plug-in	CC-1226A
		MW4GA2*-*-P40	1.7 to 2.3		
		MW4GB2*-*-P40	1.7 to 2.3		
		MW4GZ2*-*-P40	1.7 to 2.3		
	W4G4 Series	W4GB4*-*-P40	6.4 to 7.7	Plug-in	CC-1226A
		MW4GB4*-*-P40	6.4 to 8.3		
		MW4GZ4*-*-P40	6.4 to 8.3		
3-port valve					
Pilot operated soft spool valve	3G Series	3G$^{A}_{D}$*-*-P4	0.70 to 3.9		CC-1226A
		M3G$^{A}_{D}$*-*-P4	0.66 to 3.3		
		MN3G$^{A}_{D}$*-*-P4	0.68 to 2.3		
	W3G2 Series	MW3GAZ*-*-P40	1.7	One-sided solenoid	
Two 3-port valves integrated					
Pilot operated soft spool valve	3G Series	3G$^{A}_{D}$*-*-P4	0.66 to 2.2		CC-1226A
		3G$^{B}_{E}$*-*-P4	1.0 to 2.1		
		M3G$^{A}_{D}$*-*-P4	0.66 to 1.7		
		M3G$^{B}_{E}$*-*-P4	0.67 to 1.6		
		MN3G$^{A}_{D}$*-*-P4	0.68 to 1.6		
		MN3G$^{B}_{E}$*-*-P4	0.66 to 1.6		

*1: Effective cross-sectional area S and sonic conductance C are converted as S ≈ 5.0 × C.

2: Refer to Catalog No. CC-947 “Components for rechargeable battery production P4 Series”.

Clean-room specifications

Anti-dust generation pneumatic components usable in clean rooms.

Series name		Variation model No.	Flow characteristics C [dm³/(s·bar)]	Remarks	Page
4, 5-port valve					
Pilot operated soft spool valve	MN4E Series	MN4E*-*-P70	0.30 to 0.54	One-sided solenoid	863
	4G Series	4G$^{A}_{D}$*-*-P7*	0.66 to 4.0		1
		M4G$^{A}_{D}$*-*-P7*	0.66 to 3.3		
		4G$^{B}_{E}$*-*-P7*	1.0 to 4.2		
		M4G$^{B}_{E}$*-*-P7*	0.67 to 3.3		
3-port valve					
Pilot operated soft spool valve	MN3E Series	MN3E*-*-P70	0.30 to 0.54	One-sided solenoid	863
	3G Series	3G$^{A}_{D}$*-*-P7*	0.70 to 3.9		1
		M3G$^{A}_{D}$*-*-P7*	0.66 to 3.3		
Two 3-port valves integrated					
Pilot operated soft spool valve	MN3E Series	MN3E*-*-P70	0.30 to ,0.50	One-sided solenoid	863
	3G Series	3G$^{A}_{D}$*-*-P7*	0.66 to 2.2		1
		3G$^{B}_{E}$*-*-P7*	1.0 to 2.1		
		M3G$^{A}_{D}$*-*-P7*	0.66 to 1.7		
		M3G$^{B}_{E}$*-*-P7*	0.67 to 1.6		
		MN3G$^{A}_{D}$*-*-P7*	0.68 to 1.6		
		MN3G$^{B}_{E}$*-*-P7*	0.66 to 1.6		

*1: Effective cross-sectional area S and sonic conductance C are converted as S ≈ 5.0 × C.

*2: Refer to Catalog No. CB-033SA “Pneumatic components for clean room specifications.”

Coolant proof product

Pneumatic components using valve materials with excellent oil resistance and water resistance.

Series name		Variation model No.	Flow characteristics C [dm³/(s·bar)]	Remarks	Page
4, 5-port valve					
Pilot operated soft spool valve	4G Series	4G $^{A}_{D}$*-*-A-*	0.70 to 8.0		1
		4G $^{B}_{E}$*-*-A-*	1.1 to 11		
		M4G $^{A}_{D}$*-*-A-*	0.70 to 8.0		
		M4G $^{B}_{E}$*-*-A-*	0.70 to 8.3		
		MN4G $^{A}_{D}$*-*-A-*	0.71 to 2.3		
		MN4G $^{B}_{E}$*-*-A-*	0.71 to 2.2		
	W4G2 Series	W4GB2*-*-A-*	2.1 to 2.5	One-sided solenoid/ Plug-in	965
		MW4GA2*-*-A-*	1.7 to 2.3		
		MW4GB2*-*-A-*	1.7 to 2.3		
		MW4GZ2*-*-A-*	1.7 to 2.3		
	W4G4 Series	W4GB4*-*-A-*	6.4 to 7.3	Plug-in	1111
		MW4GB4*-*-A-*	6.4 to 7.4		
	4K Series (pneumatic valve)	4KA*-*-A	0.60 to 11		
		4KB*-*-A	0.63 to 13		
	PV5G/PV5 Series (ISO valve)	PV5G-*-*-*-A-*	2.8 to 6.9		1465
		PV5-*-*-A-*-TC			
3-port valve					
Pilot operated soft spool valve	3G Series	3G $^{A}_{D}$*-*-A-*	0.70 to 3.9		1
		M3G $^{A}_{D}$*-*-A-*	0.66 to 3.3		
		MN3G $^{A}_{D}$*-*-A-*	0.68 to 2.3		
	W3G2 Series	MW3GA2*-*-A-*	1.7	One-sided solenoid	965
	3K Series (pneumatic valve)	3KA1*-*-A	0.65		
Two 3-port valves integrated					
Pilot operated soft spool valve	3G Series	3G $^{A}_{D}$*-*-A-*	0.66 to 1.8		1
		3G $^{B}_{E}$*-*-A-*	0.92 to 1.7		
		M3G $^{A}_{D}$*-*-A-*	0.66 to 1.7		
		M3G $^{B}_{E}$*-*-A-*	0.67 to 1.6		
		MN3G $^{A}_{D}$*-*-A-*	0.68 to 1.6		
		MN3G $^{B}_{E}$*-*-A-*	0.66 to 1.6		

*1: Effective cross-sectional area S and sonic conductance C are converted as S ≈ 5.0 × C.

Manual selector valve

Series name	Model No.	Flow characteristic C[dm³/(s·bar)]	Eff. X-sectional area (mm²)	Remarks	Page
4-port valve					
Miniature	HMV	1.5 to 1.6	-		1837
Standard	HSV	7.2 to 10.3	-		
3-port valve					
Compact mechanical valve	MS	-	1.6 to 2.5	Detector total air system	1901
Medium mechanical valve	MM	-	1.6 to 2.5		
Large mechanical valve	MAVL	-	31		
Quick valve	3QV	-	-	ø4 to ø12	1845
2-port valve					
Quick valve	2QV	-	-	ø4 to ø12	1845

System selection

Even beginners can easily make a model selection.

How to make a system selection

An overview of the selection is available
with the following two conditions.

1 When selecting peripheral pneumatic components, having determined cylinder bore size and operation speed

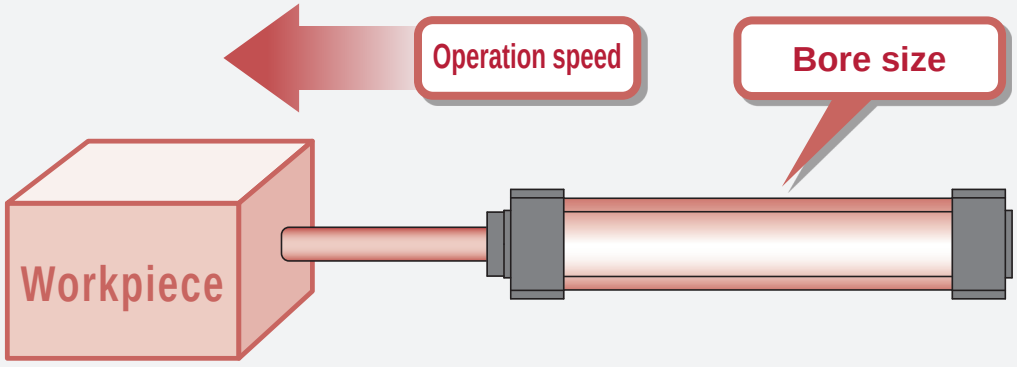

» To Intro Page **40**

2 When selecting peripheral pneumatic components, having determined bore size from cylinder load and operating time

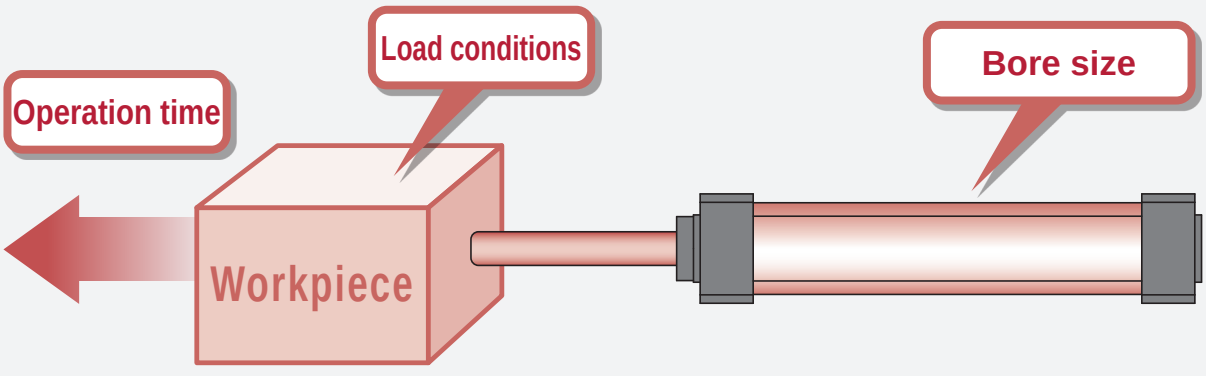

» To Intro Page **51**

1 Selecting from cylinder bore size and operation speed

STEP 1

[Confirming conditions]
Check cylinder tube bore size and cylinder operation speed

Select the theoretical reference speed

From Table 1

Whether the cylinder bore size and cylinder being used are driven with relative high or low speed is determined as a condition.

Using Table 1 as a reference, select the theoretical reference speed of the cylinder.

(1) Bore size ø□
(2) Operation speed Low speed/medium speed/ high speed/ultra-high speed

STEP 2

Select appropriate fluid control components from bore size and theoretical reference speed, and select [required flow rate]

From to Table 2

Refer to Table 2 and select appropriate fluid control components (valve, speed controller, silencer, piping) and [required flow rate] for corresponding cylinder bore size and theoretical reference speed.

STEP 3

Select the clean air system components

From to Table 3

Refer to Table 3, and select a component with a [max. flow rate] higher than the [Required flow rate] value.
When controlling multiple cylinders with a set of clean air system components, select the clean air system component having a [max. flow rate] higher than the [total of required flow rates].

* The relationship of the cylinder bore size and speed for the valve (4G Series/4K Series) is shown in a graph.
"A combination of the valve and the cylinder's standard system" (Example) Intro Pages 49 to 50

(1) The cylinder average speed is obtained from the combination of the valve and piping system. It is expressed as the cylinder's piston speed calculated by dividing the stroke length by the time that the piston rod takes from start to end of movement with the cylinder rod installed facing upward. When the load factor is 50%, the average speed should be approximately the cylinder's piston speed multiplied by 0.5. (Refer to Intro Page 53 for the relation of load factor and theoretical reference speed.)
(2) The cylinder theoretical reference speed is the value of when one cylinder moves independently.
(3) The valve's effective cross-sectional area used in the calculation for Table 2 is the 2-position value.
(4) This selection guide is for reference. With the CKD sizing program, confirm conditions to be actually used.

System selection

STEP1 Conditions confirmation/theoretical reference speed selection

As a condition, it is predetermined whether bore size and cylinder are to be operated at a relatively high speed or at a relatively low speed.

Table 1

Degree of cylinder speed	Low speed	Medium speed	High speed	Ultra high speed
Theoretical reference speed (mm/s)	250	500	750	1,000

STEP2 Fluid control components selection

Select appropriate fluid control components (valve, speed controller, silencer, piping) and [required flow rate] for bore size and theoretical reference speed selected from Table 1.

Table 2

Bore size (mm)	Theoretical reference speed (mm/s) Note)	Required flow rate (ℓ/min) (ANR)	Required composite effective cross-sectional area (mm^2)	Valve
				Single solenoid
ø6	500	5	0.1	MN4E010 4SA010/4SB010
ø10	500	14	0.2	MN4E010 4SA010/4SB010
ø16	500	36	0.5	MN4E010 4SA010/4SB010
ø20	250	29	0.5	4KA110/4KB110 4GA110R/4GB110R
	500	56	0.9	4KA110/4KB110
	750	84	1.4	4GA110R/4GB110R
	1,000	112	1.8	
ø25	250	44	0.8	4KA110/4KB110
	500	88	1.4	4GA110R/4GB110R
	750	132	2.1	4KB110/4GB110R
	1,000	175	2.8	4KB210/4GB210R
ø32	250	73	1.3	4KA110/4KB110 4GA110R/4GB110R
	500	143	2.9	4KA210/4KB210
	750	215	3.5	4GA210R/4GB210R
	1,000	286	4.6	

Note) The above table indicates theoretical reference speed at cylinder bore size.
Refer to the individual specifications of each model for the working piston speed range.

*1: Refer to Intro Page 57 for piping specifications.

Suitable control components				
		Pneumatic auxiliary components		Piping *1
	Double solenoid	Speed controller	Silencer	Piping (between valve and cylinder)
	MN4E020 4SA020/4SB020	SC3W-M5-4	SLM-M5,SLM-M3	ø4 x ø2.5 nylon tube
	MN4E020 4SA020/4SB020	SC3W-M5-4	SLM-M5,SLM-M3	ø4 x ø2.5 nylon tube
	MN4E020 4SA020/4SB020	SC3W-M5-4	SLM-M5,SLM-M3	ø4 x ø2.5 nylon tube
	4KA120/4KB120 4GA120R/4GB120R	SC3W-6-6 SCL2-06-H66	SLM-M5,SLW-6A	ø6 x ø4 nylon tube
	4KA120/4KB120 4GA120R/4GB120R	SC3W-6-6 SCL2-06-H66	SLM-M5,SLW-6A	ø6 x ø4 nylon tube
	4KA120/4KB120 4GA120R/4GB120R	SC3W-6-6 SCL2-06-H66	SLM-M5,SLW-6A	ø6 x ø4 nylon tube
	4KB120/4GB120R	SC1-6	SLW-6A,SL-M5	ø8 x ø5.7 nylon tube
	4KB220/4GB220R	SCL2-08-H88	SLW-6S,SLW-6A	ø8 x ø5.7 nylon tube
	4KA120/4KB120 4GA120R/4GB120R	SC3W-6-6 SCL2-06-H66	SLM-M5,SLW-6A	ø6 x ø4 nylon tube
	4KA220/4KB220 4GA220R/4GB220R	SC1-6 SCL2-08-H88	SLW-6S,SLW-6A	ø8 x ø5.7 nylon tube

System selection

Bore size (mm)	Theoretical reference speed (mm/s) Note)	Required flow rate (ℓ/min) (ANR)	Required composite effective cross-sectional area (mm^2)	Valve Single solenoid
ø40	250	110	1.7	
	500	230	3.3	4KA210/4KB210 4GA210R/4GB210R
	750	340	5.0	
	1,000	450	6.6	
ø50	250	180	2.6	4KA210/4KB210 4GA210R/4GB210R
	500	350	5.2	
	750	530	7.7	4GA310R/4GB310R
	1,000	710	10.4	4GA310R/4GB310R 4F310/4F410
ø63	250	280	4.1	4KA210/4KB210 4GA310R/4GB310R
	500	560	8.2	4GA310R/4GB310R
	750	840	12.3	4KA310/4KB310 4F310/4F410
	1,000	1,100	16.4	4F510
ø80	250	450	6.6	4KB210/4F210-08
	500	910	13.2	4F410-10/4F310-10 4KB310-10
	750	1,400	19.8	4KB410-15
	1,000	1,800	26.4	4F510-15
ø100	250	710	10.3	4GA410-10/4GB410-10 4F410-10/4F310-10 4KB310-10
	500	1,400	20.6	4GB410-15
	750	2,100	30.9	4KB410-15/4F510-15
	1,000	2,800	41.2	4F610-20

Note) The above table indicates theoretical reference speed at cylinder bore size.
Refer to the individual specifications of each model for the working piston speed range.

*1: Refer to Intro Page 57 for piping specifications.

Suitable control components				
		Pneumatic auxiliary components		Piping *1
	Double solenoid	Speed controller	Silencer	Piping (between valve and cylinder)
		SC3W-6-6 SCL2-06-H66	SLM-M5,SLW-6A	ø6 x ø4 nylon tube
	4KA220/4KB220 4GA220R/4GB220R	SC1-6 SCL2-08-H88	SLW-6S,SLW-6A	ø8 x ø5.7 nylon tube
		SC1-8	SLW-8A,SLW-6A	ø10 x ø7.2 nylon tube
		SC1-8	SLW-8A,SLW-8S	ø10 x ø7.2 nylon tube
	4KA220/4KB220 4GA220R/4GB220R	SC1-6 SCL2-08-H88	SLW-6A,SLW-6S	ø8 x ø5.7 nylon tube
		SC1-8	SLW-8A,SLW-6A	ø10 x ø7.2 nylon tube
	4GA320R/4GB320R	SCL2-10-H1010	SLW-8A,SLW-8S	ø10 x ø7.2 nylon tube
	4GA320R/4GB320R 4F320/4F420	SC1-10	SLW-10A	ø15 x ø11.5 nylon tube or Rc3/8 steel pipe
	4KA220/4KB220 4GA320R/4GB320R	SC1-6 SCL2-08-H88	SLW-6S,SLW-6A	ø8 x ø5.7 nylon tube
	4GA320R/4GB320R	SC1-8 SCL2-10-H1010	SLW-8A,SLW-8S	ø10 x ø7.2 nylon tube
	4KA320/4KB320 4F320/4F420	SC1-10	SLW-10A	ø15 x ø11.5 nylon tube or Rc3/8 steel pipe
	4F520	SC1-15	SLW-15A	Rc1/2 steel pipe
	4KB220/4F220-08	SC1-8 SCL2-10-H1010	SLW-8A,SLW-8S	ø10 x ø7.2 nylon tube
	4F420-10/4F320-10 4KB320-10	SC1-10	SLW-10A	ø15 x ø11.5 nylon tube or Rc3/8 steel pipe
	4KB420-15 4F520-15	SC1-15	SLW-15A	Rc1/2 steel pipe
		SC-20A	SLW-15A	Rc1/2 steel pipe
	4GA420-10/4GB420-10 4F420-10/4F320-10 4KB320-10	SC1-10	SLW-10A	ø15 x ø11.5 nylon tube or Rc3/8 steel pipe
	4GB420-15 4KB420-15/4F520-15	SC1-15	SLW-15A	Rc1/2 steel pipe
		SC-20A	SLW-15A	Rc1/2 steel pipe
	4F620-20	SC-20A	SL-20A,SLW-20S	Rc3/4 steel pipe

System selection

Bore size (mm)	Theoretical reference speed (mm/s) Note)	Required flow rate (ℓ/min) (ANR)	Required composite effective cross-sectional area (mm^2)	Valve
				Single solenoid
ø125	250	1,100	16.1	4GB410-15 4KB410-15/4F510-15
	500	2,200	32.2	
	750	3,300	48.2	4F610-20
	1,000	4,400	64.4	
ø140	250	1,400	20.2	4GB410-15 4KB410-15/4F510-15
	500	2,800	40.4	4F610-20
	750	4,200	60.5	
	1,000	5,500	80.8	4F710-25
ø160	250	1,800	26.3	4GB410-15 4KB410-15/4F510-15
	500	3,600	52.6	4F610-20
	750	5,400	79.0	4F710-20
	1,000	7,200	104.7	-
ø180	250	2,300	33.3	4KB410-15 4F510-15
	500	4,600	66.6	4F710-20
	750	6,900	100.0	4F710-25
	1,000	9,200	132.5	-
ø200	250	2,800	41.2	4F610-20
	500	5,600	82.4	4F710-25
	750	8,400	122.7	-
	1,000	11,200	163.6	-
ø250	250	4,400	64.3	4F710-20
	400	7,000	103.0	4F710-25
	750	13,200	191.7	-
	1,000	17,600	255.6	-

*1: Refer to Intro Page 57 for piping specifications.

Suitable control components				
		Pneumatic auxiliary components		Piping *1
	Double solenoid	Speed controller	Silencer	Piping (between valve and cylinder)
	4GB420-15 4KB420-15/4F520-15	SC1-15	SLW-15A	Rc1/2 steel pipe
		SC-20A	SLW-15A	Rc1/2 steel pipe
	4F620-20	SC-20A	SL-20A,SLW-20S	Rc3/4 steel pipe
		SC-20A	SL-20A	Rc3/4 steel pipe
	4GB420-15 4KB420-15/4F520-15	SC1-15	SLW-15A	Rc1/2 steel pipe
	4F620-20	SC-20A	SL-20A,SLW-20S	Rc3/4 steel pipe
			SL-20A	Rc3/4 steel pipe
	4F720-25	SC-20A	SL-25A	Rc1 steel pipe
	4GB420-15 4KB420-15/4F520-15	SC-20A	SLW-15A	Rc1/2 steel pipe
	4F620-20	SC-20A	SL-20A	Rc3/4 steel pipe
	4F720-20	SC-20A	SL-20A	Rc3/4 steel pipe
	-	-	-	-
	4KB420-15 4F520-15	SC-20A	SLW-15A	Rc1/2 steel pipe
	4F720-20	SC-20A	SL-20A	Rc3/4 steel pipe
	4F720-25	SC-25A	SL-25A	Rc1 steel pipe
	-	-	-	-
	4F620-20	SC-20A	SL-20A,SLW-20S	Rc3/4 steel pipe
	4F720-25	SC-25A	SL-25A	Rc1 steel pipe
	-	-	-	-
	-	-	-	-
	4F720-20	SC-20A	SL-20A	Rc3/4 steel pipe
	4F720-25	SC-25A	SL-25A	Rc1 steel pipe
	-	-	-	-
	-	-	-	-

STEP 3 Clean air system components selection

Select a component with a max. flow rate equal to or higher than the [required flow rate] value in Table 2.
When controlling multiple cylinders with a single set of clean air system components, select the clean air system component with [max. flow rate] higher than [total required flow rates].

Table 3

F.R.L kit			F.R. unit		
Model No.	Port size	Max flow ℓ/min (Atm press conv value)	Model No.	Port size	Max flow ℓ/min (Atm press conv value)
C1000-6-W	Rc1/8	450	W1000-6-W	Rc1/8	800
C1000-8-W	Rc1/4	630	W1000-8-W	Rc1/4	1,150
C2000-8-W	Rc1/4	1,200	W2000-8-W	Rc1/4	1,500
C2000-10-W	Rc3/8	1,700	W2000-10-W	Rc3/8	2,000
C2500-8-W	Rc1/4	1,200	W3000-8-W	Rc1/4	2,150
C2500-10-W	Rc3/8	1,700	W3000-10-W	Rc3/8	2,430
C3000-8-W	Rc1/4	1,280	W4000-8-W	Rc1/4	2,500
C3000-10-W	Rc3/8	1,750	W4000-10-W	Rc3/8	4,350
C4000-8-W	Rc1/4	1,430	W4000-15-W	Rc1/2	4,750
C4000-10-W	Rc3/8	2,400	W8000-20-W	Rc3/4	10,000
C4000-15-W	Rc1/2	3,000	W8000-25-W	Rc1	10,000
C6500-20-W	Rc3/4	4,500	B7019-1C	Rc1/8	500
C6500-25-W	Rc1	5,000	B7019-2C	Rc1/4	900
C8000-20-W	Rc3/4	7,000			
C8000-25-W	Rc1	7,500			
K60570-1C-GB	Rc1/8	200			
K60570-2C-GB	Rc1/4	300			

Explanation of technical terms

[Theoretical reference speed]: indicates degree of cylinder speed, expressed as the following formula.
(This value coincides with speed at no load. When load is applied, speed drops considerably.)

$$VO=1920 \times \frac{S}{A}=2445 \times \frac{S}{D^2} \quad (1)$$

VO: Theoretical reference speed (mm/s)
A: Cylinder sectional area (cm^2)
S: Composite effective cross-sectional area of circuit (exhaust air side) (mm^2)
D: Cylinder bore size (cm)

When expressed as a graph, the theoretical reference speed is the speed within the range where the cylinder moves at a uniform speed

$$VO=\frac{\ell}{t3} \text{ (mm/s)}$$

t1: Time until movement starts
t2: Time of primary delay
t3: Operating time with constant velocity
ℓ: Stroke length

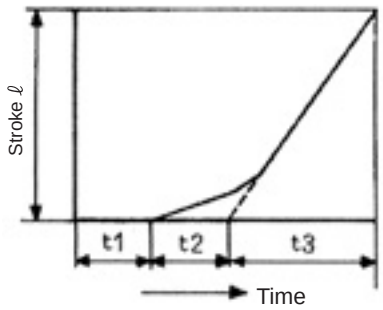

* Note/t1 and t2 differ depending on load. At no load, this can be ignored to no ill effect.

■ F.R.L. kit, unit, regulator
Primary pressure 0.7 MPa, set pressure 0.5 MPa, pressure drop 0.1 MPa

■ Air filter
Primary pressure 0.7 MPa, pressure drop 0.02 MPa

■ Lubricator
Primary pressure 0.5 MPa, pressure drop 0.03 MPa

Air filter (F)			Regulator (R)			Lubricator (L)		
Model No.	Port size	Max flow ℓ/min (Atm press conv)	Model No.	Port size	Max flow ℓ/min (Atm press conv)	Model No.	Port size	Max flow ℓ/min (Atm press conv)
F1000-6-W	Rc1/8	460	R1000-6-W	Rc1/8	770	L1000-6-W	Rc1/8	550
F1000-8-W	Rc1/4	610	R1000-8-W	Rc1/4	1,350	L1000-8-W	Rc1/4	700
F2000-8-W	Rc1/4	1,300	R2000-8-W	Rc1/4	1,750	L3000-8-W	Rc1/4	1,100
F2000-10-W	Rc3/8	1,700	R2000-10-W	Rc3/8	2,500	L3000-10-W	Rc3/8	2,250
F3000-8-W	Rc1/4	1,230	R3000-8-W	Rc1/4	2,000	L4000-8-W	Rc1/4	1,000
F3000-10-W	Rc3/8	1,500	R3000-10-W	Rc3/8	2,600	L4000-10-W	Rc3/8	1,700
F4000-8-W	Rc1/4	1,320	R4000-8-W	Rc1/4	2,500	L4000-15-W	Rc1/2	2,700
F4000-10-W	Rc3/8	2,140	R4000-10-W	Rc3/8	4,400	L8000-20-W	Rc3/4	6,300
F4000-15-W	Rc1/2	3,000	R4000-15-W	Rc1/2	5,000	L8000-25-W	Rc1	10,000
F6000-20-W	Rc3/4	5,600	R6000-20-W	Rc3/4	7,000	A3019-1C	Rc1/8	100
F6000-25-W	Rc1	6,200	R6000-25-W	Rc1	7,700	A3019-2C	Rc1/4	400
F8000-20-W	Rc3/4	6,400	R8000-20-W	Rc3/4	14,000	3003E-6C	Rc3/4	3,500
F8000-25-W	Rc1	6,800	R8000-25-W	Rc1	11,000	3003E-8C	Rc1	4,000
A1019-1C	Rc1/8	550	B2019-1C	Rc1/8	500			
A1019-2C	Rc1/4	700	B2019-2C	Rc1/4	500			
1138-6C-E	Rc3/8	5,500	2215-6C	Rc3/4	14,000			
1138-8C-E	Rc1	7,000	2215-8C	Rc1	14,000			
			2215-10C	Rc1 1/4	14,000			

[Required flow rate]: indicates instantaneous flow rate for operating a cylinder with velocity *vo*, expressed with the following formula. Values in the table are when P = 0.5 MPa. The required flow rate is a value necessary to select clean air system components.

$$Q \approx \frac{Avo(P+0.101)\times 60}{0.101\times 10^4} \quad -(2)$$

Q: Required flow rate (ℓ/min) (ANR)
P: Supply pressure (MPa)

[Required effective sectional area]: indicates composite effective cross-sectional area for the exhaust circuit required for moving the cylinder at speed *vo*.
(Composite effective cross-sectional area of valve, speed controller, silencer or piping)

[Proper standard system]: indicates the most appropriate combination of valve, speed controller, silencer and bore size for operating a cylinder with velocity *vo*. The combination in the table is for a pipe length of 1 m.

System selection

A combination of the valve and the cylinder's standard system (example)

(1) The cylinder average speed is obtained from the combination of the valve and piping system. It is expressed as the cylinder's piston speed calculated by dividing the stroke length by the time that the piston rod takes from start to end of movement with the cylinder rod installed facing upward. When the load factor is 50%, the average speed should be approximately the cylinder's piston speed multiplied by 0.5. (Refer to Intro Page 53 for the relation of load factor and theoretical reference speed.)
(2) The cylinder's average speed is that when one cylinder is operated independently.
(3) The effective cross-sectional area of the solenoid valve used for the calculation below is the 2-position value.
(4) This selection guide is for reference. Check the selection with actual conditions using a sizing program.
(5) Graph for the 4G and 4K Series valve (2-position single, base piping) is shown as an example.

4G Series (With internal exhaust check valve)

(Example) The connection component system No. is ❷ for the 4G1 with a C6 port size.

Series	Base piping						System No.
	Model No.	Solenoid valve port size	Speed controller	Silencer	Piping (1 m)	Composite effective cross-sectional area (mm^2) Pipe length (1 m)	
4G1	M4GB110R	C4	SC3W-6-4	SLW-6S	ø4xø2.5	1.4	❶
	M4GB110R	C6	SC1-6	SLW-6S	ø6xø4	2.8	❷
4G2	M4GB210R	C6	SC1-8	SLW-8S	ø6xø4	4.5	❸
	M4GB210R	C8	SC1-10	SLW-8S	ø8xø5.7	6.7	❹
4G3	M4GB310R	C10	SC1-10	SLW-10L	ø10xø7.2	10.1	❺
	M4GB310R	C10	SC1-15	SLW-10L	ø12xø8.9	11.5	❻

* The system No. is indicated in the following graph.

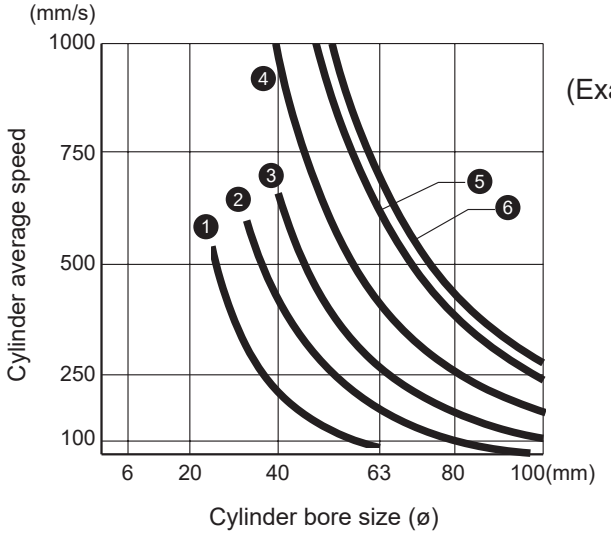

(Example) When using system ❷ with ø40 cylinder diameter, the cylinder's average speed is about 450 mm/s. (Note that this differs with working conditions.)

MN4G Series

(With internal exhaust check valve)

Series	Solenoid valve port size	Speed controller	Piping (1 m)	Common exhaust piping	Composite effective X-sectional area (mm^2)	System No.
MN4G1	C4	SC3W-M5-4	ø4xø2.5	ø6xø4x3 m	0.9	❶
	C4	SC3W-6-4	ø4xø2.5	ø6xø4x3 m	1.4	❷
	C6	SC1-6	ø6xø4	ø8xø5.7x3 m	2.8	❸
MN4G2	C6	SC1-6	ø6xø4	ø8xø5.7x3 m	3.8	❹
	C8	SC1-8	ø8xø5.7	ø10xø7.2x3 m	6.0	❺

* The system No. is indicated in the following graph.
* This graph applies to common exhaust.

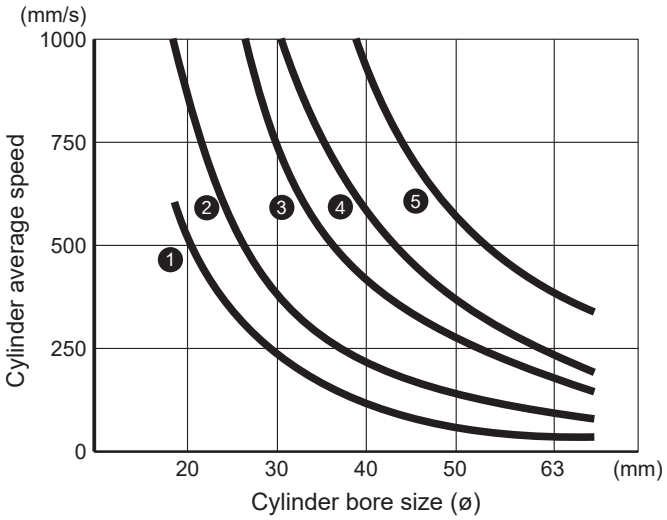

4K Series

Series	Solenoid valve port size	Speed controller	Silencer	Piping (1 m)	Composite effective X-sectional area (mm^2)	System No.
4KB110	C6	SC1-6	SLW-6S	ø6xø4	3.2	❶
4KB210	C8	SC1-8	SLW-8S	ø8xø5.7	7.7	❷
4KB310	C10	SC1-10	SLW-10L	ø10xø7.2	14.1	❸
4KB410	C15	SC1-15	SLW-15A	ø12xø8.9	23.6	❹

* The system No. is indicated in the following graph.

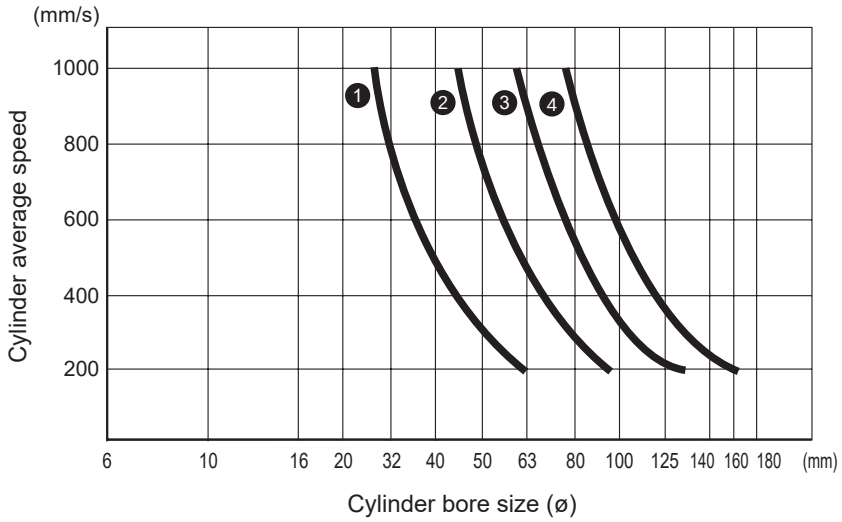

System selection

2 Selecting from the load value and operation time

How to select

When load (N) and cylinder required operation time (S) are already decided, use [System selection 2] to select an appropriate model. Follow the following procedures.

STEP 1

[Confirming conditions]
Load value (N),
Required operation time (S)

↓

STEP 2

Selecting cylinder bore size

From Graph 1

↓

STEP 3

Selecting theoretical reference speed

From Graph 2

↓

STEP 4

Selecting a suitable system

From Graph 3

↓

STEP 5

Selecting suitable components

From Table 1

STEP 1 Confirming conditions

(1) Load	F=□(N)
(2) Required operation time	t =□(s)
(3) Stroke	L=□(mm)
(4) Pressure	P=□(MPa)

M: Weight of body (kg)
μ : Friction coefficient (normally μ≈ 0.3)
F : Load (N)
g : 9.8 m/s²

● Vertical

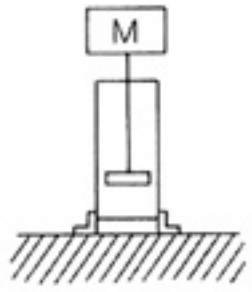

F=Mg

● Horizontal

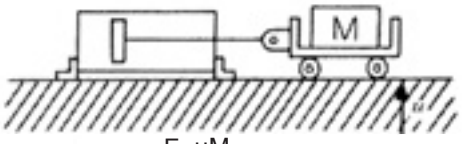

F=μMg

STEP 2 Selecting cylinder bore size

According to the nomogram for cylinder bore size, select the cylinder bore size and read the load factor at the same time. (Normally, for value F of “Step 1 Confirming conditions”, read the cylinder bore size whose load factor is close to 50%)

Cylinder bore size D = ø□

(Example) When F = 800N, P = 0.5 MPa, cylinder bore size is ø63 at Load factor 50% .

Graph 1 Nomogram to find cylinder bore size

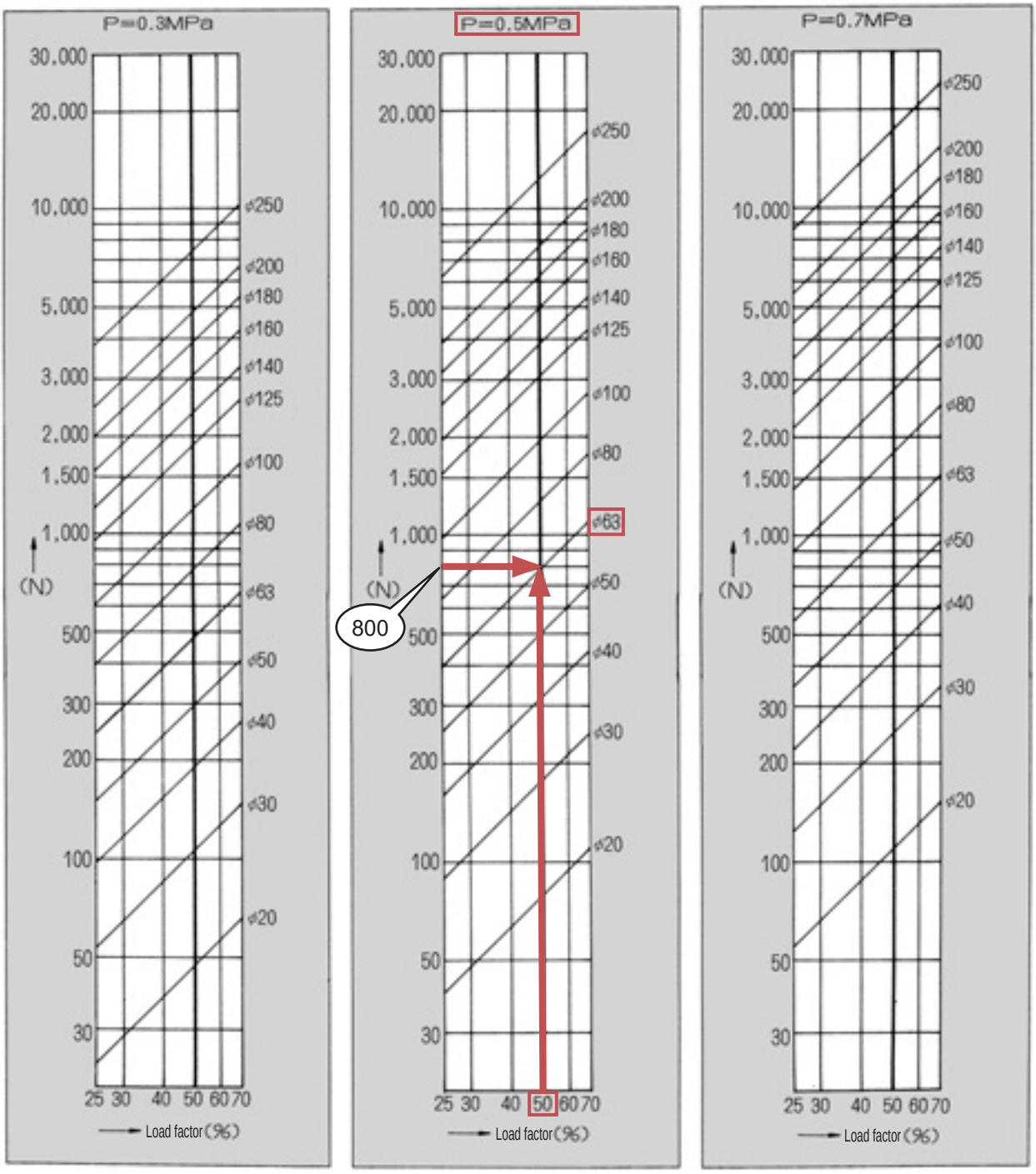

STEP 3 Selecting theoretical reference speed

According to t-*vo* graph, read *vo* value to obtain the required operation time t (sec).

vo=▭

(Example) When Load factor 50% and Stroke length of 200mm cylinder operate with 1.0sec, theoretical reference speed is 450 mm/s.

Graph 2 t-*vo* graph

Load factor 0%

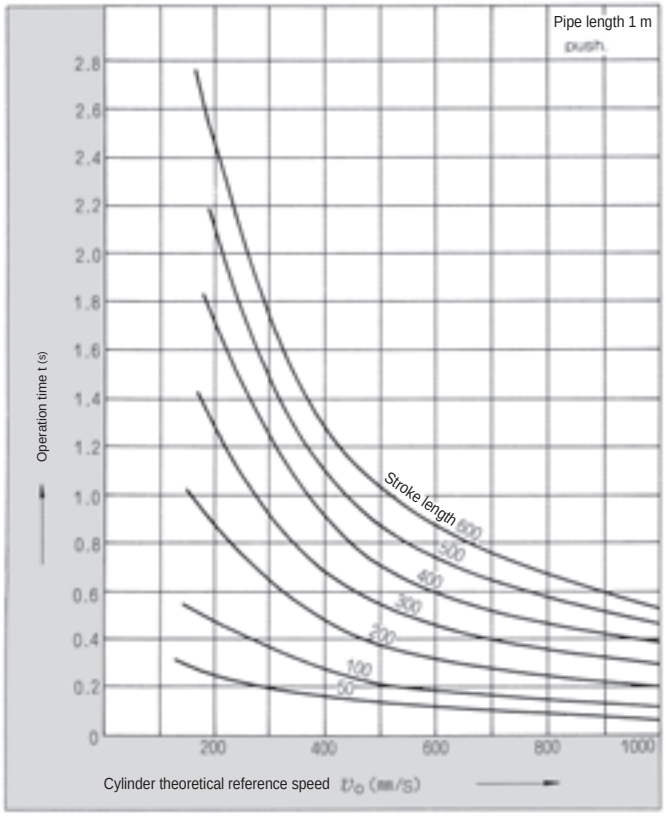

Load factor 25%

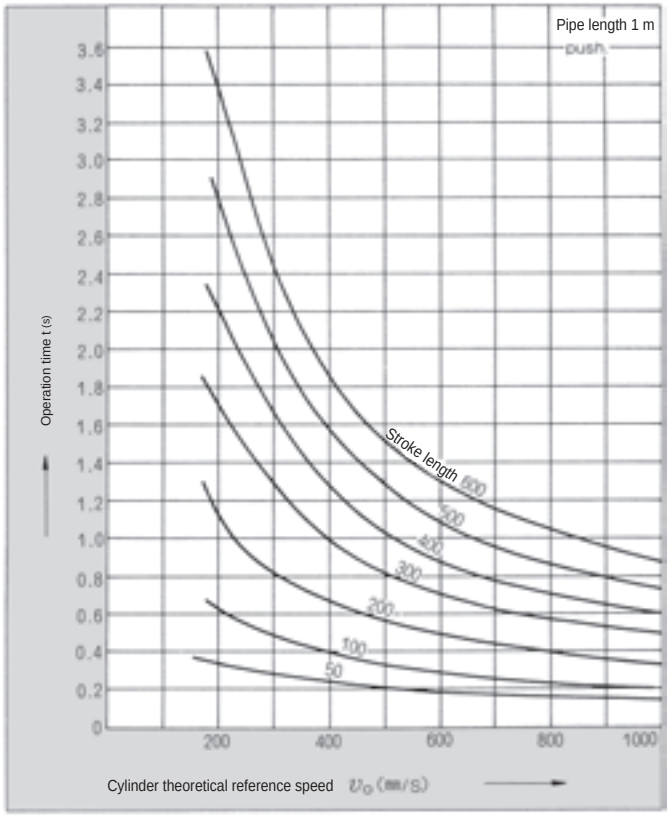

Load factor 50%

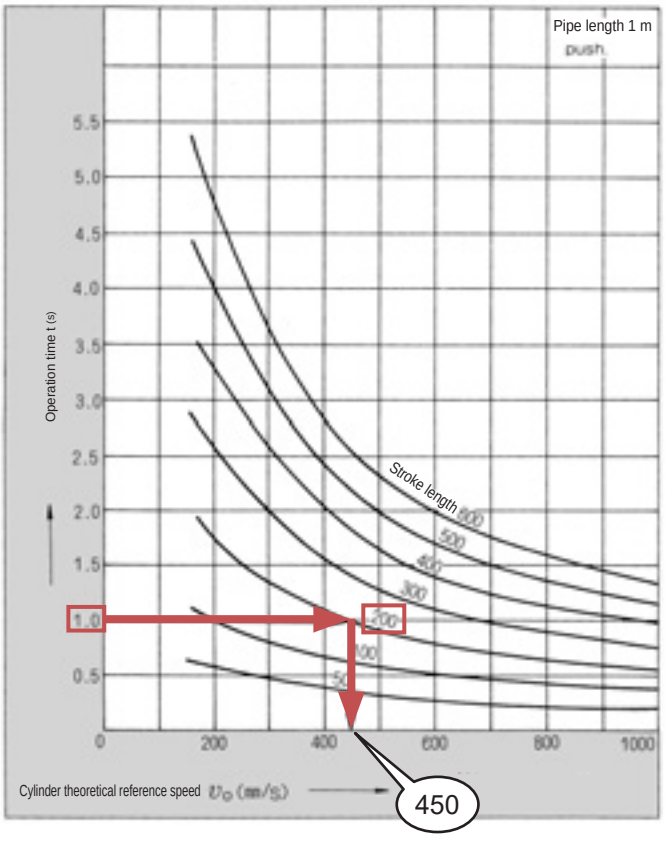

Load factor 70%

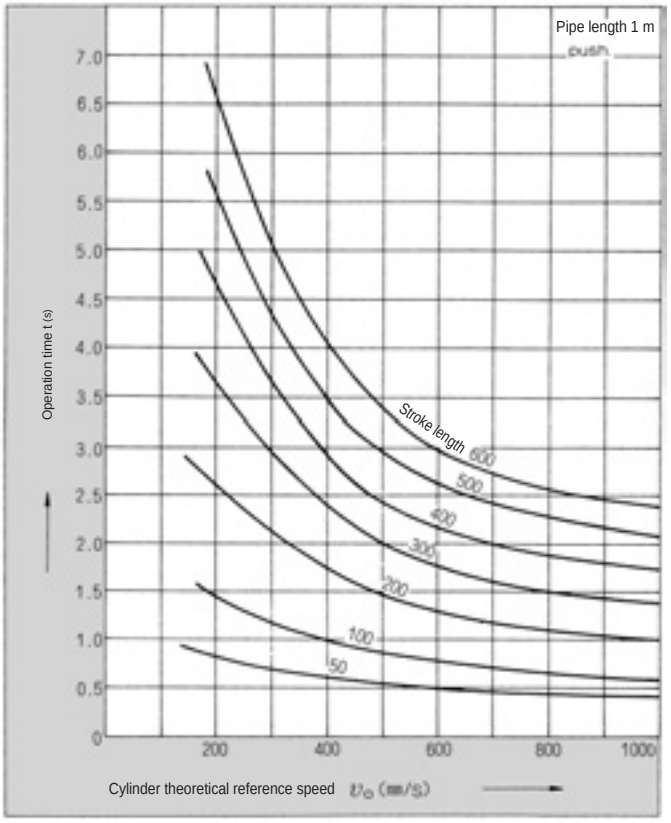

STEP 4 Selecting a suitable system

In the system selection table, find the cross point of *VO* obtained in [STEP 3 Selecting theoretical reference speed] and øD obtained in [STEP 2 Selecting cylinder bore size], and from the cross point, trace a line extended straight up to read the system code.

System code ▭

(Example) In order to operate ø63 cylinder at theoretical reference speed 450 mm/s, C1 system is ideal.

Graph 3 System selection table

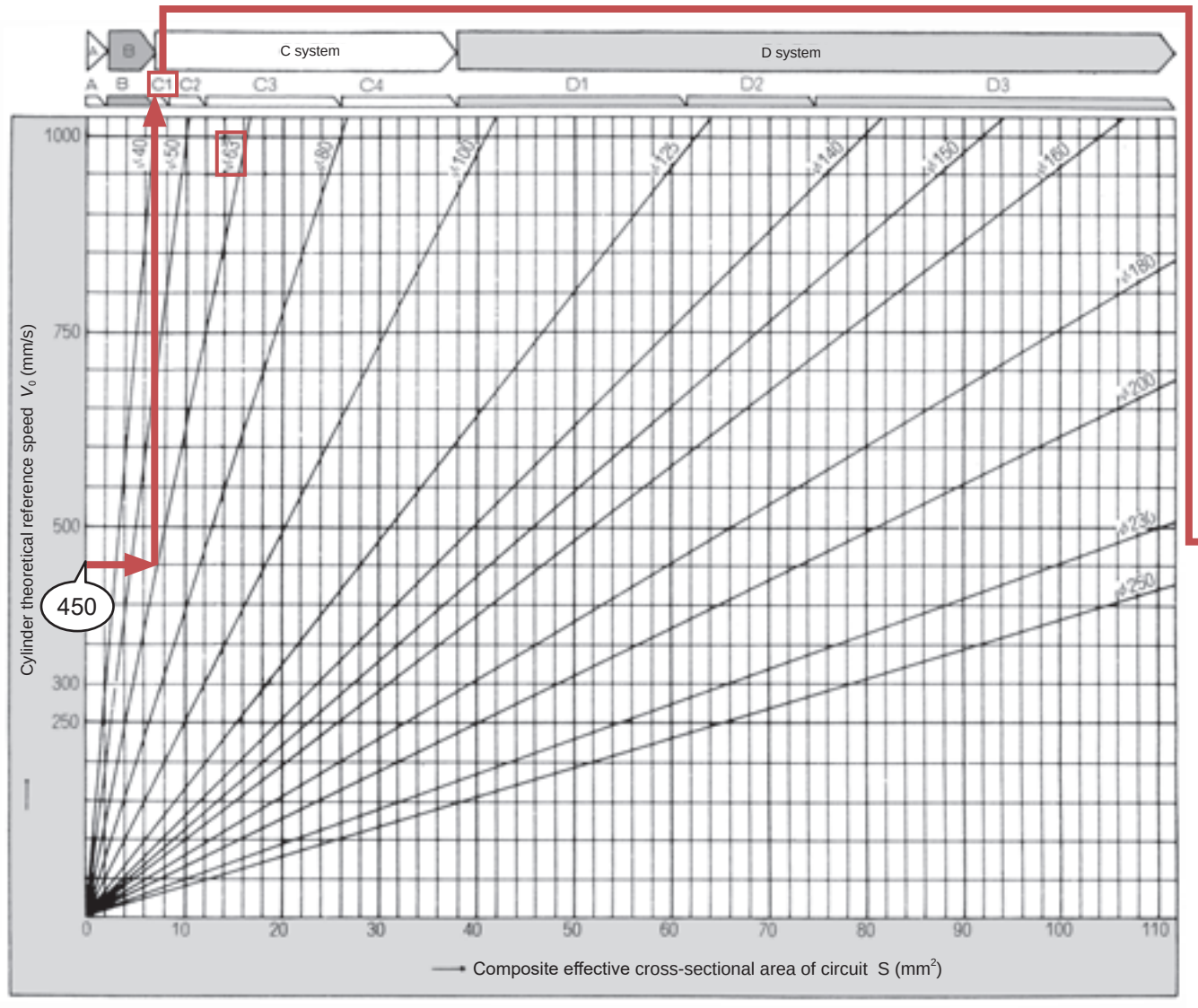

STEP 5 Selecting suitable components

According to the standard system table, confirm the model No. of proper system components with the code found in [STEP 4 Selecting a suitable system].

	(Example) CI system
Valve ☐	Valve: Single 4KB210-08 or 4GB310R-08 Double 4KB220-08 or 4GB320R-08
Speed controller ☐	Speed controller: SCI-8
Silencer ☐	Silencer: SLW-8A
Piping ☐	Piping: ø10 x ø7.2 nylon tube 1 m

Table 1 Standard system table

Standard system No.	Valve		Speed controller	Silencer	Piping	Composite eff X-sect area (mm^2) pipe 1 m
	Single solenoid	Double solenoid				
A	4SB010-M5 4KA110-GS4	4SB020-M5 4KA120-GS4	SC3W-M5-4 (SC-M5)	SLM-M5	ø4×ø2.5 Nylon tube	0.9
B1	4KA110-GS6 4KB110-06	4KA120-GS6 4KB120-06	SC3W-6-6 SCL2-06-H66	SLM-M5 SLW-6A	ø6×ø4 Nylon tube	2.0
B2	4KB110-06 4GB110R-06	4KB120-06	SC1-6 SCL2-08-H88	SL-M5 SLW-6A	ø8×ø5.7 Nylon tube	3.0
B3	4GB210R-06 4KB210-06	4KB220-06	SC1-6 SCL2-08-H88	SLW-6A SLW-6S	ø8×ø5.7 Nylon tube	5.2
B4	4GB210R-08 4KB210-08	4GB220R-08 4KB220-08	SC1-8 SCL2-10-H1010	SLW-6A SLW-8A	ø10×ø7.2 Nylon tube	6.4
C1	4GB210R-08 4KB210-08 4F210-08	4GB220R-08 4KB220-08 4F220-08	SC1-8 SCL2-10-H1010	SLW-8A SLW-8S	ø10×ø7.2 Nylon tube	7.8
C2	4GB310R-10 4F310-10 4KB310-10	4GB320R-10 4F320-10 4KB320-10	SC1-10	SLW-10A	ø10×ø7.2 Nylon tube or Rc3/8 steel pipe	12
C3	4GB410-15 4F510-15 4KB410-15	4GB420-15 4F520-15 4KB420-15	SC1-15	SLW-15A	Rc1/2 steel pipe	27
C4	4GB410-15 4F510-15 4KB410-15	4GB420-15 4F520-15 4KB420-15	SC-20A	SLW-15A	Rc1/2 steel pipe	38
D1	4F610-20	4F620-20	SC-20A	SL-20A	Rc3/4 steel pipe	64
D2	4F710-20	4F720-20	SC-20A	SL-20A	Rc3/4 steel pipe	80
D3	4F710-25	4F720-25	SC-25A	SL-25A	Rc1 steel pipe	112

Effective cross-sectional area for steel pipes and nylon tubes, and recommended max. flow rate for gas pipes

Effective cross-sectional area of steel pipe

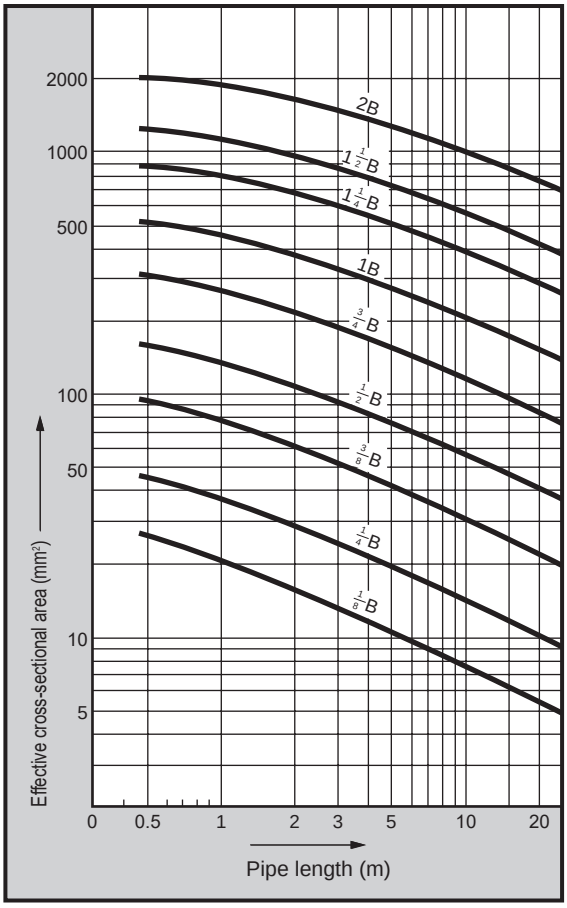

Effective cross-sectional area of nylon tube

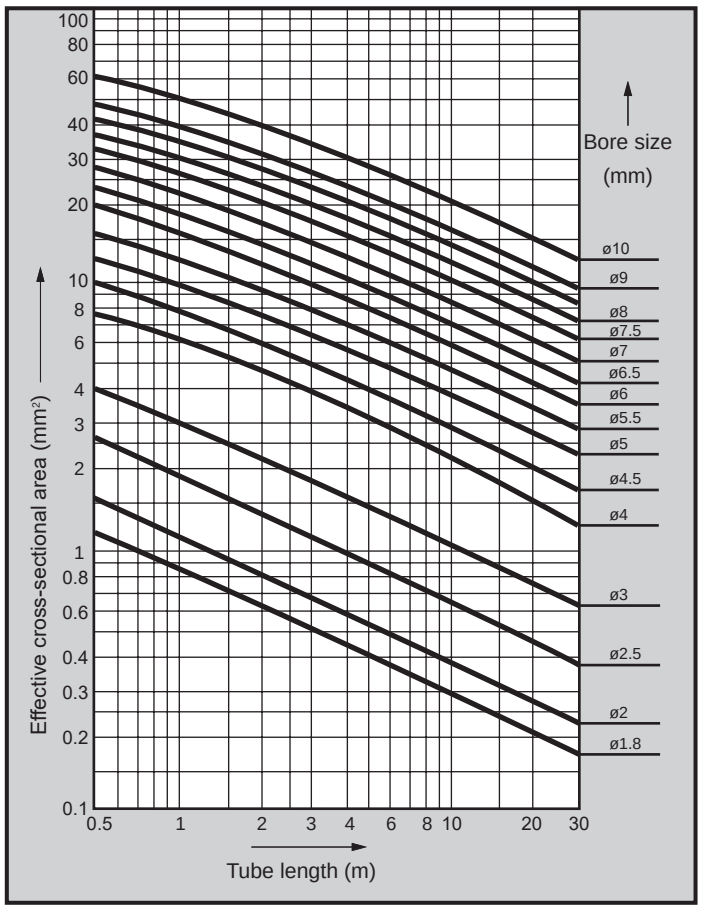

Recommended max. flow rate table of gas tube

Nominal size	1/8B	1/4B	3/8B	1/2B	3/4B	1B	1 1/4B	1 1/2B
Pressure drop MPa (*1)	0.124	0.0707	0.0576	0.0425	0.0276	0.0209	0.0133	0.0105
Inlet pressure MPa	Recommended max. flow rate (ℓ/min)							
0.05	127	244	518	838	1,465	2,460	3,870	5,150
0.1	146	282	598	965	1,690	2,828	4,460	5,950
0.15	163	314	668	1,076	1,885	3,150	4,960	6,630
0.2	179	344	730	1,180	2,060	3,450	5,430	7,280
0.3	206	395	840	1,360	2,375	3,900	6,300	8,400
0.4	230	442	940	1,520	2,660	4,450	7,000	9,360
0.5	252	485	1,030	1,660	2,920	4,875	7,700	10,250
0.6	272	523	1,110	1,800	3,140	5,250	8,300	11,050
0.7	292	558	1,185	1,920	3,350	5,620	8,870	11,800
0.8	308	592	1,260	2,035	3,560	5,970	9,430	12,570
0.9	324	623	1,325	2,140	3,745	6,290	9,900	13,220
1.0	340	654	1,395	2,250	3,930	6,600	10,400	13,880
1.2	370	717	1,510	2,450	4,280	7,150	11,250	15,040
1.4	398	763	1,625	2,624	4,590	7,700	12,100	16,200
1.5	410	790	1,680	2,710	4,740	7,930	12,550	16,780

(*1: Inlet pressure = 0.5 MPa
Gas pipe length: 10 m)

(Remarks)

In the main line where the piping distance tends to increase, it is necessary to consider a pressure drop occurring at the end of the main line when air passes.

The recommended max. flow rate refers to the max. flow rate that can be recommended in the range of allowable pressure drop with respect to piping length, determined from actual use.

This does not mean that a higher flow is not possible, but rather that the pressure will further decrease if the flow exceeds this value.

Flow characteristics display method

1. Flow characteristics display

The catalog specifications indicate the flow rate as follows.

Applicable components	Display	Code	Standards
Pneumatic components	JIS compliant display	C, b	ISO 6358:1989 "Pneumatic fluid Components -Flow characteristics test method"JIS B 8390:2000 (ISO 6358 translation)
	Conventional indication	S	JIS B 8379:1995 "Pneumatic noise reduction device"
		Cv	ANSI(NFPA)T3. 21. 3 R1-2008

2. Explanation

Pneumatic componentsflow characteristics are, Conventionally, effective cross-sectional area S are shown in, JIS revised (JIS B 8390:2000), sonic conductance# C and critical pressure ratio b Now it is displayed by the pair of.

- Sonic conductance C :Value obtained by dividing the passage mass flow of the choked flow Component by the product of the upper limit absolute pressure and standard condition density. (sonic conductance) S≈5.0C (C enables sizing as before.)
- Critical pressure ratio b:Pressure at which choked flow results if smaller than this value (Downstream pressure/Upstream pressure) (critical pressure ratio)
- Effective cross-sectional area S (mm^2):The value of the ideal restricted cross-sectional area without friction or compressed flow, calculated from the pressure changes inside the air tank when the choked flow is released from the components mounted on the air tank.

*Choked flow: Flow in which upstream pressure is higher than downstream pressure, and speeds at Components sections reach acoustic velocity. The fluid's mass flow rate is proportional to the upstream pressure, and is not dependent on downstream pressure.(Choked flow)

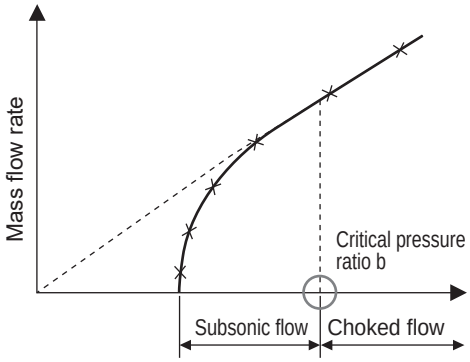

Fig. 1 Mass flow characteristics for upstream pressure

Flow rate formula

Depending on the actual unit, they are shown as follows.

- Choked flow when $\frac{P_2}{P_1} \leq b$

$$Q=600\times C\times P_1 \times \sqrt{\frac{293}{273+T}} \quad \text{.....(1)}$$

- Subsonic flow when $\frac{P_2}{P_1} > b$

$$Q=600\times C\times P_1 \times \sqrt{1-\left[\frac{\frac{P_2}{P_1}-b}{1-b}\right]^2} \times \sqrt{\frac{293}{273+T}} \quad \text{.....(2)}$$

Q : Flow rate in standard condition L/min(ANR)
C : Sonic conductance [$dm^3/(s\cdot bar)$]
b : Critical pressure ratio
S : Effective cross-sectional area mm^2
P_1 : Primary side absolute pressure MPa(abs)
P_2 : Secondary side absolute pressure MPa(abs)
T : Air temperature °C

To calculate effective cross-sectional area S, substitute the value C obtained with C = S/5 above in the above formula.
For subsonic flow, Substitute b=0.5 in the formula.

Safety Precautions

Be sure to read this section before use.

When designing and manufacturing equipment using CKD products, the manufacturer is obligated to ensure that the safety of the mechanism, pneumatic control circuit and/or water control circuit and the system that runs the electrical controls are secured.
It is important to select, use, handle and maintain CKD products appropriately to ensure their safe usage.
Observe warnings and precautions to ensure device safety.
Check that device safety is ensured, and manufacture a safe device.

WARNING

1 This product is designed and manufactured as a general industrial machine part.
It must be handled by an operator having sufficient knowledge and experience.

2 Use this product in accordance with specifications.

This product must be used within its stated specifications. In addition, never modify or additionally machine this product.
This product is intended for use in general industrial machinery equipment or parts. It is not intended for use outdoors (except for products with outdoor specifications) or for use under the following conditions or environments. (Note that this product can be used when CKD is consulted prior to its usage and the customer consents to CKD product specifications. The customer should provide safety measures to avoid danger in the event of problems.)

❶ Use for applications requiring safety, including nuclear energy, railways, aircraft, marine vessels, vehicles, medical devices, devices or applications in contact with beverages or foodstuffs, amusement devices, emergency cutoff circuits, press machines, brake circuits, or safety devices or applications.
❷ Use for applications where life or assets could be significantly affected, and special safety measures are required.

3 Observe organization standards and regulations, etc., related to the safety of the device design and control, etc.

ISO4414,JIS B 8370(Pneumatic fluid power - General rules and safety requirements for systems and their components)
JFPS2008(Principles for pneumatic cylinder selection and use)
Including the High Pressure Gas Safety Act, Industrial Safety and Health Act, other safety rules, organization standards and regulations, etc.

4 Do not handle, pipe, or remove devices before confirming safety.

❶ Inspect and service the machine and devices after confirming safety of the entire system related to this product.
❷ Note that there may be hot or charged sections even after operation is stopped.
❸ When inspecting or servicing the device, turn OFF the energy source (air supply or water supply), and turn OFF power to the facility. Discharge any compressed air from the system, and pay enough attention to possible water leakage and leakage of electricity.
❹ When starting or restarting a machine or device that incorporates pneumatic components, make sure to secure system safety, such as pop-out prevention measures.

5 Observe the warnings and cautions on the following pages to prevent accidents.

■ Precautions are ranked as “DANGER”, “WARNING”, and “CAUTION” in this section.

DANGER:	In the case where the product operation is mishandled and/or when the urgency of a dangerous situation is high, it may lead to fatalities or serious injuries.
WARNING:	A dangerous situation may occur if handling is mistaken, leading to fatal or serious injuries.
CAUTION:	A dangerous situation may occur if handling is mistaken, leading to minor injuries or property damage.

Note that some items indicated with “CAUTION” may lead to serious results depending on the conditions.
All items contain important information and must be observed.

Warranty

1 Warranty period

The product specified herein is warranted for one (1) year from the date of delivery to the location specified by the customer.

2 Warranty coverage

If the product specified herein fails for reasons attributable to CKD within the warranty period specified above, CKD will promptly provide a replacement for the faulty product or a part thereof or repair the faulty product at one of CKD's facilities free of charge.

However, following failures are excluded from this warranty:

1) Failure caused by handling or use of the product under conditions and in environments not conforming to those stated in the catalog, the Specifications, or the Instruction Manual.
2) Failure caused by use of the product exceeding its durability (cycles, distance, time, etc.) or caused by consumable parts.
3) Failure not caused by the product.
4) Failure caused by use not intended for the product.
5) Failure caused by modifications/alterations or repairs not carried out by CKD.
6) Failure caused by reasons unforeseen at the level of technology available at the time of delivery.
7) Failure caused by acts of nature and disasters beyond control of CKD.

The warranty stated herein covers only the delivered product itself. Any loss or damage induced by failure of the delivered product is excluded from this warranty.

Note: For details on the durability and consumable parts, contact your nearest CKD sales office.

3 Compatibility check

The customer is responsible for confirming the compatibility of CKD products with the customer's systems, machines and equipment.

Precautions for export

1 Security Trade Control

The products in this catalog and their related technologies may require approval before export or provision.

For the sake of maintaining world peace and safety, there may be cases in which approval under the Foreign Exchange and Foreign Trade Control Law is required in advance, depending on the country to where the product or related technology is being exported or provided.

The scope of products and related technologies requiring approval are listed in the Export Trade Control Order Appendix Table 1 or Foreign Exchange Order Appendix Table.

The Export Trade Control Order Appendix Table 1 and Foreign Exchange Order Appendix Table contain the following two types of information.

· "List controls" specified for items 1 to 15
· "Catch-all controls" that do not indicate specifications by item, but restriction by application (Section 16)

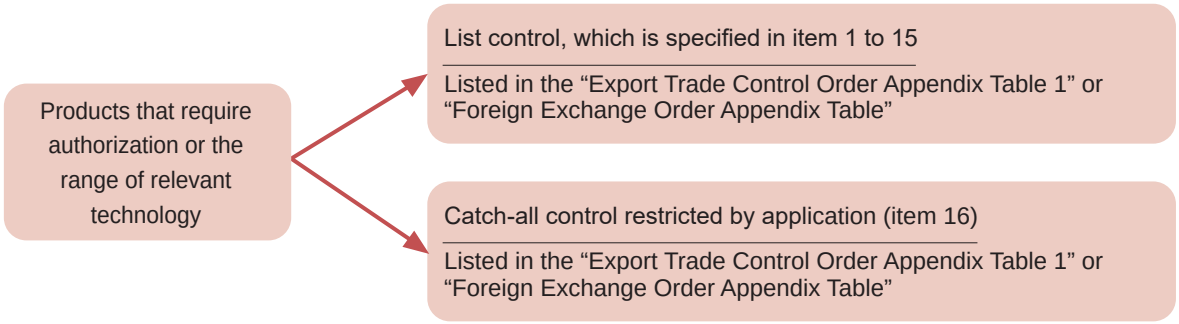

An application for approval is received by the Security Export Licensing Division of the Ministry of Economy, Trade and Industry or local bureaus of the Ministry of Economy, Trade and Industry.

2 Products and related technologies in this catalog

The products and related technologies in this catalog are subject to the catch-all control of the Foreign Exchange and Foreign Trade Control Law.

When exporting or providing the products or related technologies in this catalog, ensure that they are not used for arms or weapons.

3 Contact

Contact your local CKD Sales Office for information on the Security Trade Control of products and related technologies in this catalog.

Design/selection

1. Checking the specifications

WARNING

■ Use the product in the range of conditions specified for the product.

The product in this catalog is designed for use only in a compressed air system. Use with pressure or temperature exceeding the specifications range may result in damage or operation faults. (Refer to specifications) Contact CKD when using fluids other than compressed air.

2. Safety design

WARNING

■ Understand the characteristics of compressed air before designing a pneumatic circuit.

- The same functions as the mechanical, hydraulic, and electrical methods cannot be anticipated if instantaneous stopping and holding are required during an emergency stop.
- Pop-out, air discharge, or leakage due to air compression and expansion may occur.
- The supply and exhaust of the valve must operate simultaneously. When the supply is operated in advance, the actuator switching will be delayed. When the exhaust is operated in advance, the actuator speed will be uncontrollable, causing the popping out phenomenon.

■ Make sure that the switching signals of the 2-position and 3-position double solenoids are never energized at the same time.

■ When using a 3-position all ports closed valve with a custom stroke, the properties of compressed air make it impossible to brake at an accurate position. In addition, as valves and cylinders, etc., are designed to allow small volumes of air leakage, pressure retention applications are not available, as they may cause the stop position to change or cause a pressure drop.

■ Pay attention to the electric circuit during emergency stop and to the cylinder operation during power outages.

- If the 2-position double solenoid is started and then switched, it will hold that status unless a reverse operation electrical signal is input.

■ Install a “pressure switch” and “shut-off valve” on the device’s compressed air supply side.

- The pressure switch will disable operation until the set pressure is reached. The shut-off valve releases compressed air into the pneumatic pressure circuit to prevent accidents caused by operation of pneumatic components under residual pressure.

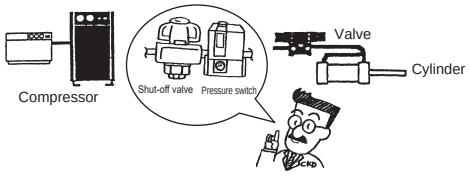

■ Do not constrict the air supply piping.

- A drop in pressure due to simultaneous operation of multiple stations may cause malfunctions.

■ Take measures to prevent physical harm or property damage in the event of failure of this product.

CAUTION

■ Check for leakage current to avoid malfunction caused by leakage current from other fluid control components.

- When using a programmable controller, leakage current may affect the solenoid valve and cause malfunction. Note that the values that are affected by leakage current depend on the solenoid valve.

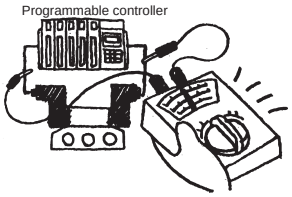

Using 100 VAC	3.0 mA or less (*1)
Using 200 VAC	1.5 mA or less
Using 12 VDC	1.5 mA or less (*2)
Using 24 VDC	1.8 mA or less (*2)

*1: 1.2 mA or less for the 4G Series.
*2: 1.0 mA or less with the MN4S0 series, 4S0 series, and 3M0 series.

■ Observe the following precautions when using nylon tubes or urethane tubes for piping material.

- Use flame-resistant tubes or metal steel pipes in an environment where spattering may occur.
- Use hydraulic hose when piping is for both hydraulic and pneumatic use.
- When using the standard push-in fitting on the spiral tube, fix the base of the tube with a hose clamp. Rotation may occur, causing a reduction in holding force.
- Use a fastening fitting in a high-temperature atmosphere. The push-in fitting cannot be used.

3. Working environment

WARNING

■ Confirm before use that the product will withstand the working environment.

- This product cannot be used in an atmosphere containing corrosive gas, chemical liquids, solvents, water or steam. If water, oil, or metal chips (spatter or cutting chips, etc.) could come in contact with the product, provide appropriate protection.
- Consult with CKD if ozone is generated in the supplied air. (Ozone-proof products are available.)
- Products other than explosion-proof solenoid valves cannot be used in an atmosphere containing explosive gas.

■ Install the product where it will not be exposed to rain, water, direct sunlight, or high temperatures.

(The explosion-proof 4F ** OE series and outdoor 4F-W series are available for outdoor use.)

■ Do not use this product in a corrosive environment.

Use in such an environment could lead to damage or operation failure.

⚠CAUTION

■Use clean air.
- If compressed air contains chemicals, synthetic oils containing organic solvents, salt, or corrosive gas, do not use as it can cause damage and/or operation failure.

4. Durability

⚠WARNING

■Decide on a method of lubricating pneumatic components, and provide correct maintenance.
- Is it a no-lubrication?
- Is it a lubrication?

Specify either of the above for control of lubricant.

■Ultra dry air is not suitable for pneumatic components.
- Ultra dry compressed air will shorten the life of pneumatic components. For use, be sure to use a solenoid valve for DC voltage drive.

■Continuous energizing during use may accelerate degradation of the solenoid valve. Contact CKD when using the solenoid valve under such conditions.
- When using a product with continuous energization, be sure to use items with DC voltage specifications or fluoro rubber specifications.

5. Pneumatic source

⚠CAUTION

■Install a pneumatic filter just before the pneumatic component in the circuit.

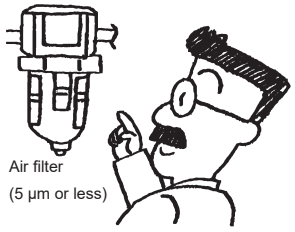

■Do not supply anything other than compressed air.

■Use clean compressed air that does not contain corrosive gases.

■Use dry compressed air that does not cause moisture inside the piping.

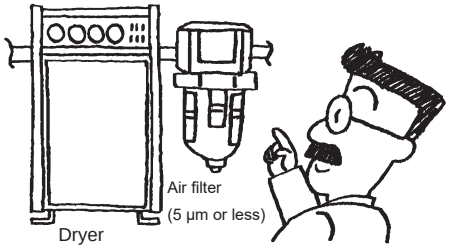

- Moisture will occur if the temperature drops in the pneumatic piping or pneumatic components.
- Operation faults could occur if moisture enters the air flow path of pneumatic components and temporarily blocks passage.
- Moisture could cause rust, making the pneumatic components fail.
- The drain will flush the lubricant oil and cause a lubrication defect.

■Use compressed air that does not contain oil oxides, tar, carbon, etc., from the air compressor.
- If oil oxides, tar, or carbon enter the pneumatic components and solidify, resistance at the sliding section will increase, leading to operation failure.
- If the supplied lubricant mixes with oil oxides, tar, carbon, etc., the sliding section of the pneumatic component could be worn down.

■Use compressed air that does not contain solid foreign matter.
- Any solid foreign matter in the compressed air can enter the pneumatic components and cause wear or locking in the sliding parts.

6. Usage method

⚠WARNING

■ Do not narrow the exhaust port of the manifold valves.

● There may be cases where other cylinders are subject to unintended operation due to back pressure generated from the exhaust of the switching valve. In this case, individually install a manifold two-sided exhaust type or a single exhaust spacer equipped type with the valve causing the situation.

⚠CAUTION

■ Make sure that the instantaneous energizing/ manual override of the double solenoid 2 position valve is 0.1 seconds or more.
However, as the cylinder may malfunction due to secondary side load conditions, it is recommended that energizing/manual override is performed until the cylinder reaches the stroke end position.

■ For manual override of the push type, push the manual override straight.

■ Do not use the product with the air supply port throttled or released to atmospheric pressure.

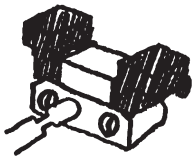

Do not restrict the air supply port!

● With the internal pilot, the supply pressure may drop lower than the specified range and cause malfunctioning. In this case, use the external pilot.

■ Continuous energizing for long periods may accelerate degradation of the solenoid valve. Consult with CKD when energizing this device continuously. Furthermore, use caution under the following working conditions, as with continuous energization:
- When performing continuous energizing for a long period of time or when the energized time in a single day will be longer than the non-energized time

Install with an eye to heat dissipation.

■ With the internal pilot solenoid valve, turn the power ON after applying the supply pressure.
The main valve may stop at an unintended position and prevent proper switching.

7. Securing of space

⚠CAUTION

■ Secure sufficient space around the solenoid valve for installation, removal, wiring, and piping work.

8. Clearly indicated in the instruction manual

⚠CAUTION

■ Indicate the maintenance conditions in the device's instruction manual.

● The product's performance may drop too low to maintain an appropriate safety level depending on usage conditions, working environment and maintenance status. With correct maintenance, the product functions can be used to the fullest.

Mounting, installation and adjustment

1. Installation

⚠ WARNING

■ When mounting a valve, do not use a mounting method that relies on support from the piping.
- Mount and fix the valve body.

■ After mounting, do not clean or paint with water or solvent.
- Otherwise some resin parts may be damaged.
- Paint could plug the pilot exhaust port and result in malfunctions.

■ Do not narrow the exhaust port to a smaller one than the bore size of the piping connection port. (The pilot exhaust port is also included as an exhaust port)
- Either attach a silencer or install a solenoid valve so that the exhaust port is facing downwards.
  A suctioning effect may be generated at the exhaust port due to valving element operations and cause the intake of foreign matter near the exhaust port.
  If the exhaust port is facing upwards, foreign matter may fall into it.
- The actuator will not operate correctly if the exhaust air is not discharged smoothly. With the manifold, the exhaust air may prevent the correct operation of other solenoid valves.

■ Do not block the pilot exhaust port (PR port).
- Pilot pressure will not be discharged and will fail to operate.

■ Remove the valve packaging and dust-proof seal of the piping port just before starting piping.
- Removing the dust-proof seal of the piping port before the piping work starts could allow foreign matter to enter the valve from the piping port and cause failure or misoperation.

■ Check that tubing is not worn or damaged.
- Tubing could collapse, rupture, or become dislocated.

2. Pre-operation confirmation

⚠ CAUTION

■ When supplying compressed air after connecting pipes, do not suddenly apply high pressure.
- The pipe connection could dislocate, causing the pipe tube to fly out, leading to accidents.
- Caution: If compressed air is supplied too slowly, sealing pressure may not be generated depending on the internal sealing mechanism of the solenoid valve and may cause air leakage.

■ As air leakage may occur when compressed air is supplied with the two 3-port valves integrated (differential pressure return) without piping to the output port, be sure to supply the compressed air after piping the output port.

■ Before supplying compressed air after connecting pipes, check that there are no air leaks at any pipe connections.
- Apply a leakage detection agent to pipe connections with a brush and check for air leaks.

3. Adjustment

⚠ WARNING

■ When the manual operation device of the solenoid valve has been operated, always be sure to operate the device after reset to the origin (default position). Be sure to check that the non-locking has automatically returned or that the locking is in a state where the lock is released (OFF state).

[Example]

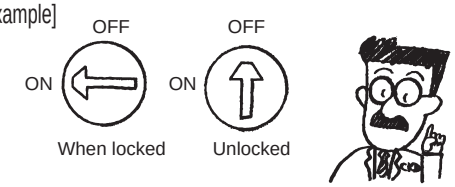

Note: As this varies depending on the model, refer to the pages of each model for operation methods.

- The solenoid valve will operate as soon as the pneumatic source power is turned ON, which is hazardous.
- When the manual override device is used for operation at the operating position, abnormal operation is a risk.

4. Piping

⚠CAUTION

■When connecting pipes, wrap sealing tape in the opposite direction from the threading, from the inside position to within 2 mm from the pipe end.

● If sealing tape protrudes from the pipe threads, it could be cut when screwing the bolts in. This could cause the tape to enter the solenoid valve, causing failures.



■Always flush just before piping pneumatic components.

● Any foreign matter that has entered during piping must be removed so it does not enter the pneumatic components.

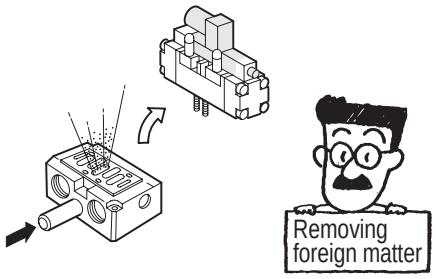

■Use appropriate torque to tighten the pipes when connecting them.

● The purpose is to prevent air leakage and damage to bolts.
First tighten the bolts by hand to ensure that the threads are not damaged, then use a tool.



Port thread	Tightening torque N·m
M3	0.3 to 0.6
M5	1.0 to 1.5
Rc 1/8	3 to 5
Rc 1/4	6 to 8
Rc 3/8	13 to 15
Rc 1/2	16 to 18
Rc 3/4	19 to 40
Rc 1	41 to 70

■When piping to the product
Properly connect pipes by confirming the piping port position with the display, etc., on the product. Incorrect piping may cause irregular operation of the actuator.

■Connect piping so that connections are not dislocated by equipment movement, vibration, or tension.

● Control of actuator speed will be disabled if piping on the exhaust side of the pneumatic circuit is disengaged.
● When using the chuck holding mechanism, the chuck may be released, creating a hazardous state.
● Cut the push-in fitting tube at right angles with a dedicated tool.
● Confirm that the tube has been inserted properly, and make sure that there is no tension during use. The tube could be dislocated or damaged if there is any tension.

■Make sure that there is no torsion, tension or moment load applied to the fitting or the tube.

■Use the designated tube.

● Particularly in the case of super-flexible urethane tubes, attach insert sleeves for use.

■Securely insert the tube to the tube end, and make sure that the tube cannot be pulled off.

■Cut the tube with a dedicated cutter and always at a right angle.

Use/maintenance

1. Maintenance and inspection

WARNING

■ When the manual operation device of the valve has been operated, always be sure to operate the device after reset to the origin (default position). Be sure to check that the non-locking has automatically returned or that the locking is in a state where the lock is released (OFF state).
[Example]

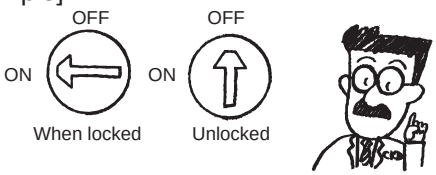

Note: As this varies depending on the model, refer to the pages of each model for operation methods.

- The solenoid valve will operate as soon as the power is turned ON, which is hazardous.
- When the manual override device is used for operation at the operating position, abnormal operation is a risk.

■ Conduct daily inspections and regular inspections to ensure that maintenance control is done correctly.
- If maintenance is not correctly managed, the product's functions could deteriorate markedly and lead to a shortened service life, faults and accidents.

1. Pressure management of supplied compressed air pressure
- Is the set pressure supplied? Does the pressure gauge indicate the set pressure while the equipment is operating?

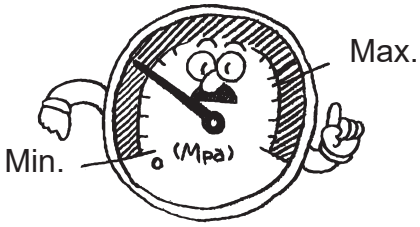

2. Control of pneumatics filter
- Is the drain correctly discharged?
  Is the bowl or element clean enough to use?

3. Control of compressed air leaks from piping connections
- Is the state of the connection, especially at movable sections, normal?

4. Valve operational status control
- Are operations delayed? Is exhaust normal?

5. Control of pneumatic actuator operation
- Is operation smooth? Is the end stop state normal?
  Is coupling with the load normal?

6. Lubricator control
- Is the oil volume adjustment normal?

7. Lubricant control
- Is the lubricant that is being supplied an official item?

2. Removal

WARNING

■ Before conducting maintenance, turn the power OFF, stop the supply of compressed air and make sure that there is no residual pressure.
- Observe the conditions to ensure safety.

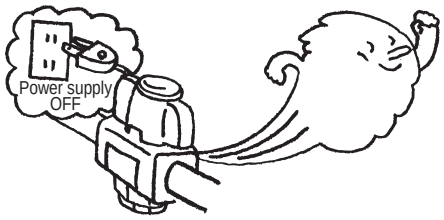

3. Disassembly/assembly

WARNING

■ Read the relevant product's instruction manual thoroughly and fully familiarize yourself with the task before disassembling or assembling the solenoid valve.
- Personnel must be fully familiar with solenoid valve structure and operational principles and safety requirements.
- Pneumatic Pressure Skill Test Class 2 or higher level is required.

4. Pneumatic source

CAUTION

■ The no-lubrication function cannot be maintained once lubrication has been applied to a no-lubrication valve.
Once lubrication has been applied, it will be necessary to continue lubricating the valve.
- Decide on lubrication or no-lubrication for the pneumatic components and ensure that implementation of the corresponding method is properly managed.
- With the lubrication method, lubricants other than class 1 turbine oil ISO VG32 (no additives) cannot be used.

⚠ CAUTION

Install the wiring while sufficiently checking the polarity, voltage, and terminal numbers.

- A voltage drop may occur due to simultaneous energizing or cable length.
  Confirm that the voltage drop for the solenoid is within 10% of the rated voltage.

Serial transmission (T6*, T 7*, For T8*)

- The working voltage is 24 VDC dedicated.
- If operation may be affected by noise, wire the power supply independently for each manifold solenoid valve when possible.
- Keep the power supply cable as short as possible.
- Do not share power with an inverter or a component causing motor noise, etc.
- Do not lay the power wire, signal wire, and other power cables in parallel.
- The device units are dedicated for each manufacturer. There is no compatibility.
- For how to wire the device unit, follow the instructions provided from the PLC manufacturer. The terminal numbers of the device unit are displayed on the attachment side of the device unit.
- For information regarding the PLC, please contact the corresponding PLC manufacturer. Contact CKD for inquiries regarding the UNIWIRE system and SAVE NET.
- When installing a manifold solenoid valve vertically, install the device unit at the top end.
- For the T8* Series, be sure to use a waterproof cap and waterproof plug for connectors that the input/output device unit does not use.

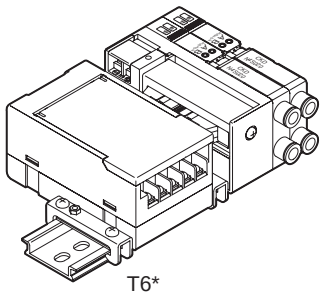

T6*

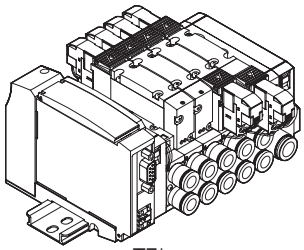

T7*
(4G Series)

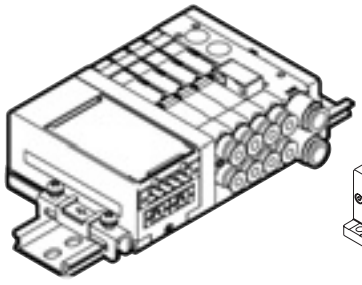

T7*
(MN4E Series)

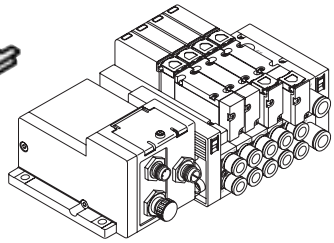

T8*
(W4G2 Series)

(2) Connector (T50, T50A)

- As it is necessary to match the signal arrangement of the PLC output unit with the signal arrangement on the valve side, direct connections with a PLC are currently limited. Connect with reference to the wiring connection examples (MN4E Series: page 949, M4G$^{A}_{B}$/MN4G$^{A}_{B}$ Series: page 835, MN4S0 Series: page 1220). For the cables, use dedicated cables for each PLC manufacturer.
- Working voltage is 24 VDC, 12 VDC dedicated.
- When connecting the T50, T50A type to a general output unit, use the + terminal (20, 10) of the 20P connector as the + side common, and use the NPN transistor output open collector type for the drive circuit. Contact CKD when using the PNP transistor output.
- Do not connect this solenoid valve to the input unit as major Breakdowns could occur in this Component and in peripherals. A malfunction may occur. Connect this solenoid valve to the output unit. Although common connectors are employed with the input units and output units of the relay terminal series of OMRON and Panasonic Electric Works Co., Ltd., the pin arrangement and polarity of the power supply are different. The pin arrangement of the T50 type of this solenoid valve is the same pin arrangement as the above output unit.

⚠ CAUTION

■ Install so that no force is applied to the connector section.The fixing screws may loosen if force is applied to the connector section.

- The connector rotates upwards and sideways.Further fasten the fixing screws after installation of the solenoid valve can fix the connectors.
- Make sure that the tightening torque of the fixing screws is 0.3 to 0.36 N・m.

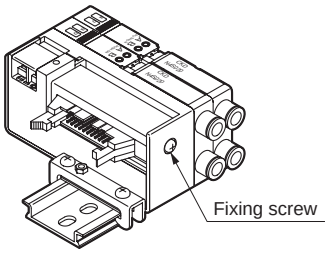

Reduced wiring valve / product-specific cautions (MN4E, M(N)4G$^{A}_{B}$, MW4G2, MW4G4, MN4S0, M(N)4TB Series)

⚠ CAUTION

(3) Connector (T30, T31, T51, T52, T53, TM*)

- These models are dedicated for use with a working voltage of 12 and 24 VDC.
- Use the 4S0 Series with the + common.

⚠ CAUTION

■ Install so that no force is applied to the connector section. The fixing screws may loosen if force is applied to the connector section.

- The connector rotates upwards and sideways. Further fasten the fixing screws after installation of the solenoid valve can fix the connectors.
- Make sure that the tightening torque of the fixing screws is 0.3 to 0.36 N·m.

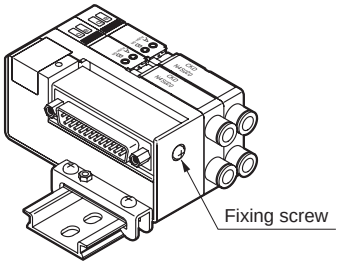

(5) Multi-connector (T20)

- Be sure to disconnect the power supply before inserting/ removing the connectors.
- Plug the connectors in all the way to ensure that the lock is engaged.

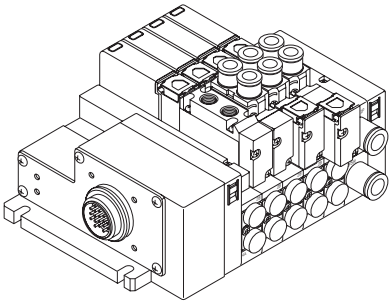

(4) Terminal block (T10, 11)

- Install the terminal block in a location that is out of reach or place a cover on the unit.

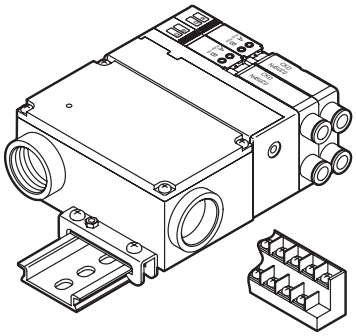

T10 terminal appearance

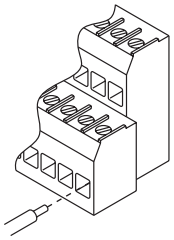

T11 terminal appearance

Electrical connection list (Discrete valve/individual wiring manifold)

* Refer to Intro Pages 30 to 33 for reduced wiring manifolds.

● Selection of electrical connections, manual operating devices, and options ■ : Yes

	Series / Description / Page	Voltage (V) (Power consumption W)	Electrical connections				
2, 3-port valve	**3QB** Series ---------- 1552 **3QR** Series ---------- 1558 *1: Some models differ depending on the specifications.	Standard *1 12 VDC (2.0 W) 24 VDC (1.8 W)	1	2	3	4	5
			6	7	8	9	10
			11	12	13	14	15
			16	17	18	19	20
			21	22	23	24	25
			26	27	28	29	
	3M Series ---------- 1591	Standard 24 VDC (0.6 W) Option 12 VDC (0.6 W) 6 VDC (0.9 W) 5 VDC (0.9 W)	1	2	3	4	5
			6	7	8	9	10
			11	12	13	14	15
			16	17	18	19	20
			21	22	23	24	25
			26	27	28	29	
	Miniature pneumatic valve series **P/M/B51$^{2}_{3}$** ---------- 1633 *1: The A-connector is only supported with manifolds.	Standard 100 VAC (1.8/1.4 W) 200 VAC (1.8/1.4 W) (50/60 Hz) 12 VDC (1.8 W) 24 VDC (1.8 W)	1	2	3	4	5
			6	7	8	9	10
			11	12	13	14	15
			16	17	18	19	20
			21	22	23	24	25
			26	*1	28	29	
	3P Series ---------- 1607 *1: Some models in the 3P series differ in part.	Standard *1 100 VAC (1.8/1.4 W) 200 VAC (1.8/1.4 W) (50/60 Hz) 24 VDC (1.8 W) Option 110 VAC (50/60 Hz) 220 VAC (50/60 Hz) 12 VDC	1	2	3	4	5
			6	7	8	9	10
			11	12	13	14	15
			16	17	18	19	20
			21	22	23	24	25
			26	27	28	29	
	4K Series ----------1257 **(3KA1)**	Standard 100 VAC (1.8/1.4 W) 200 VAC (1.8/1.4 W) (50/60 Hz) 24 VDC (1.8 W) Option 110 VAC (50/60 Hz) 220 VAC (50/60 Hz) 12 VDC	1	2	3	4	5
			6	7	8	9	10
			11	12	13	14	15
			16	17	18	19	20
			21	22	23	24	25
			26	27	28	29	
4, 5-port valve	Miniature pneumatic valve series Discrete valve ---------- 1633 **W2P51*** **P/B5142** Individual wiring manifold **B*5142** **N*5142**	Standard 100 VAC (1.8/1.4 W) 200 VAC (1.8/1.4 W) (50/60 Hz) 12 VDC (1.8 W) 24 VDC (1.8 W)	1	2	3	4	5
			6	7	8	9	10
			11	12	13	14	15
			16	17	18	19	20
			21	22	23	24	25
			26	27	28	29	
	4S0 Series ----------1231	Standard 24 VDC (0.6 W) Option 12 VDC (0.6 W) 6 VDC (0.9 W) 5 VDC (0.9 W)	1	2	3	4	5
			6	7	8	9	10
			11	12	13	14	15
			16	17	18	19	20
			21	22	23	24	25
			26	27	28	29	
	4K Series ---------- 1257	Standard 100 VAC (1.8/1.4 W) 200 VAC (1.8/1.4 W) (50/60 Hz) 24 VDC (1.8 W) Option 110 VAC (50/60 Hz) 220 VAC (50/60 Hz) 12 VDC	1	2	3	4	5
			6	7	8	9	10
			11	12	13	14	15
			16	17	18	19	20
			21	22	23	24	25
			26	27	28	29	
	4F Series ---------- 1365	Standard 100 VAC (1.8/1.4 W) 200 VAC (1.8/1.4 W) (50/60 Hz) 24 VDC (1.8 W) Option 110 VAC (50/60 Hz) 220 VAC (50/60 Hz) 12 VDC (4F0, 4F1 standard)	1	2	3	4	5
			6	7	8	9	10
			11	12	13	14	15
			16	17	18	19	20
			21	22	23	24	25
			26	27	28	29	

1 Grommet lead wire
Circuit diagram ⓐ

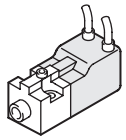

6 Compact terminal box
None (B)
Circuit diagram ⓑ

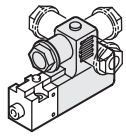

11 DIN terminal box
None
Circuit diagram ⓐ

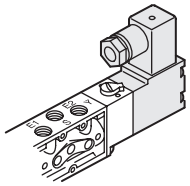

16 Round terminal box with light + Ground (A-15a) equipped
Circuit diagram ⓕ

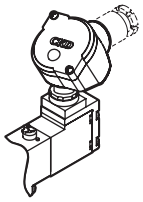

21 C-connector
None (B) (C) (D)
Circuit diagram ⓖ

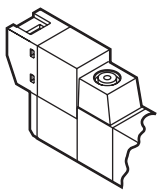

26 D-connector
None (B) (C) (D)
Circuit diagram ⓖ

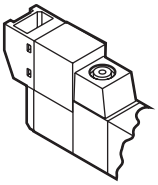

Refer to the next page for circuit diagrams ⓐ to ⓗ.

Electrical connections (wiring method)

(None): Without lead wire (A): With lead wire (B): With indicator lamp
(C): With surge suppressor (D): Without socket

2	3	4	5
Grommet lead wire (C) Circuit diagram ⓑ	Conduit lead wire Circuit diagram ⓐ	Compact terminal box (G1/4) (None) Circuit diagram ⓐ	Compact terminal box (None) (B) Circuit diagram ⓒ
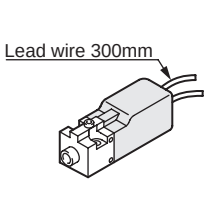	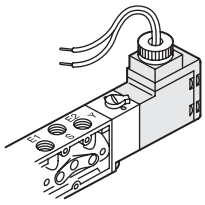	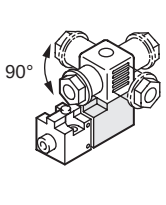	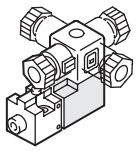

7	8	9	10
Compact terminal box (A) (B) Circuit diagram ⓓ	Terminal box (None) Circuit diagram ⓐ	Terminal box (None) (B) Circuit diagram ⓒ	Terminal box (None) (B) (C) Circuit diagram ⓒ
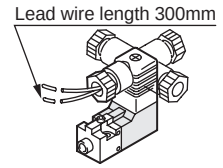	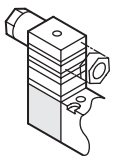	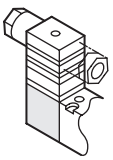	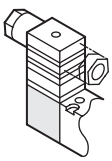

12	13	14	15
DIN terminal box (None) (B) Circuit diagram ⓒ	Round terminal box (G1/2 / G3/4) Circuit diagram ⓔ	Round terminal box (B) Circuit diagram ⓕ	Round terminal box + Ground (A-15a) equipped Circuit diagram ⓔ
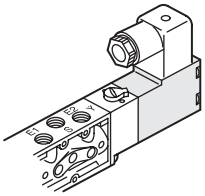	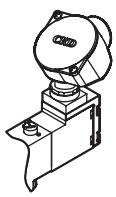	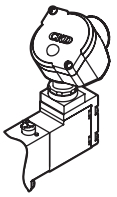	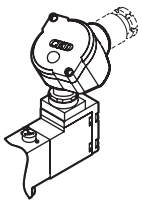

Refer to the next page for circuit diagrams of the electrical connections.

17	18	19	20
C-connector (A) Circuit diagram ⓐ	C-connector (None) Circuit diagram ⓐ	C-connector (A) (B) (C) Circuit diagram ⓖ	C-connector (None) (B) (C) Circuit diagram ⓖ
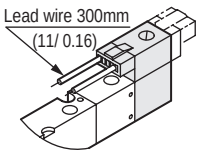	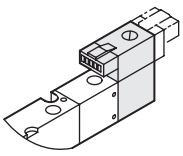	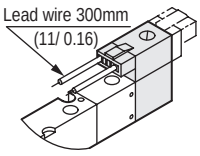	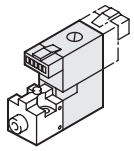

22	23	24	25
D-connector (A) Circuit diagram ⓐ	D-connector (None) Circuit diagram ⓐ	D-connector (A) (B) (C) Circuit diagram ⓖ	D-connector (None) (B) (C) Circuit diagram ⓖ
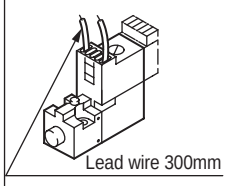	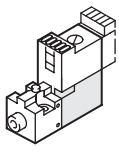	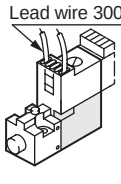	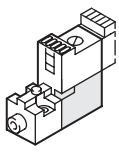

27	28	29
A-connector (A) (B) (C) Circuit diagram ⓖ	A-connector (B) (C) Circuit diagram ⓖ	A-connector (D) (B) (C) Circuit diagram ⓖ
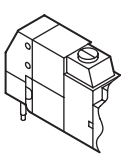	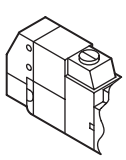	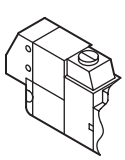

Electrical connection list (Discrete valve/individual wiring manifold)

● Selection of electrical connections, manual operating devices, and options ▭ : Available

	Series	Page	Voltage (V) (Power consumption W)	Electrical connections					
3-port valve	**3QE** Series	1546	100 VAC 24 VDC 12 VDC 3 VDC 5 VDC	31	32	33	34	35	36
				37	38	39	40	41	42
				43	44	45			
3, 5-port valve	**4G1 to 3** Series **MN4G** Series	7 225	100 VAC 200 VAC 24 VDC (0.6 W) 12 VDC (0.6 W)	31	32	33	34	35	36
				37	38	39	40	41	42
				43	44	45			
	4G4 Series	697	100 VAC 110 VAC 24 VDC (1.0 W) 12 VDC (1.0 W)						
	W4G2 Series	965	100 VAC 24 VDC (0.6 W) 12 VDC (0.6 W)	31	32	33	34	35	36
				37	38	39	40	41	42
				43	44	45			
5-port valve	**W4G4** Series	1111	100 VAC 110 VAC 24 VDC (1.2 W) 12 VDC (1.2 W)	31	32	33	34	35	36
				37	38	39	40	41	42
				43	44	45			
	PV5G Series	1471	100 VAC 200 VAC 110 VAC 220 VAC 24 VDC (1.2 W) 12 VDC (1.2 W)	31	32	33	34	35	36
				37	38	39	40	41	42
				43	44	45			
	PV5 Series	1499	24 VDC (1.2 W)	31	32	33	34	35	36
				37	38	39	40	41	42
				43	44	45			
3, 4-port valve	**MN4E0** Series	863	24 VDC (0.6 W) 12 VDC (0.6 W)	46	47				
	MN4S0 Series	1191		48					

31 Grommet lead wire Ⓐ Circuit diagram ⓐ

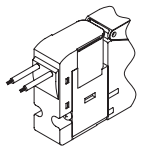

Note) AC voltage is not available.

37 E-connector with socket/terminal Ⓑ Ⓒ Circuit diagram ⓖ

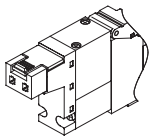

44 DIN terminal box Ⓑ Ⓒ

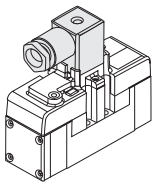

Circuit diagram

a Basic

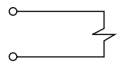

* With the 4G1 to 3 Series

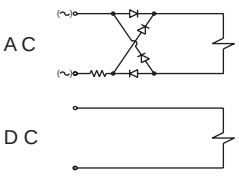

* Grommet lead wire for DC only

b With surge suppressor

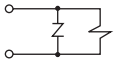

c With indicator lamp

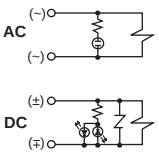

The DC model has a surge suppressor

d Compact terminal box/with lamp

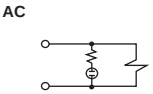

e Round terminal box/basic

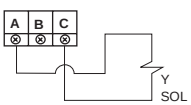

f Round terminal box/with lamp

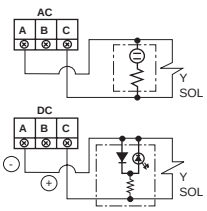

g With surge suppressor and indicator lamp

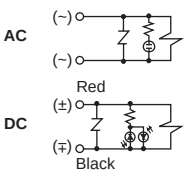

* For 4SO/4S1

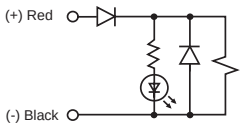

* Note that models with surge suppressor and lamp have polarity.
* Diode is used as a surge suppressor.

g With surge suppressor and indicator lamp, cont.

* For 4G1 to 3 Series

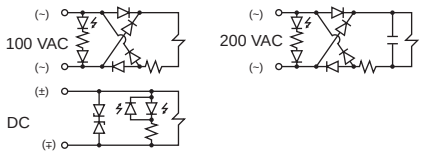

* A-connector for DC only

* For W4G2 Series

(Single)

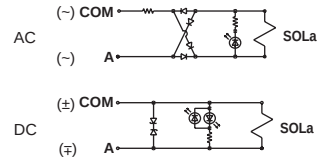

(Double)

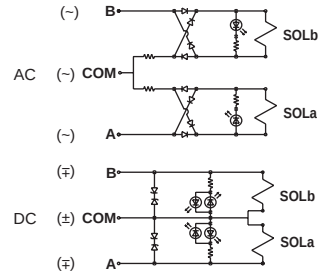

For circuit diagrams of ⓐ, ⓖ, and ⓗ, refer to the circuit diagrams of the following table.

Electrical connections (wiring method)

(None): Without lead wire (A): With lead wire (B): With indicator lamp
(C): With surge suppressor (D): Without socket

32 E-connector (A) Circuit diagram ⓐ

● **Lead wire length**
300 mm
500 mm
1 m
2 m
3 m

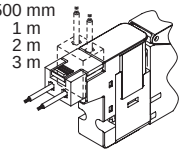

33 E-connector (D) Circuit diagram ⓐ

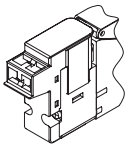

34 E-connector With socket/terminal

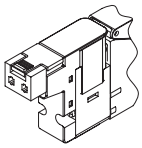

● For AC voltages, the ⓐ dimension is 3.5 mm longer than for DC voltages.

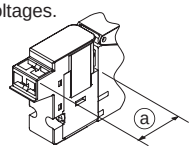

35 E-connector (A)(B)(C) Circuit diagram ⓖ

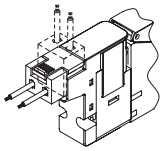

36 E-connector (B)(C)(D) Circuit diagram ⓖ

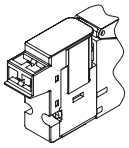

38 A-connector (downward) (D) Circuit diagram ⓖ

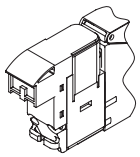

39 DIN terminal box (B)(C) Circuit diagram ⓗ

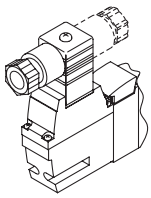

40 EJ type connector with cover (A) Circuit diagram ⓐ

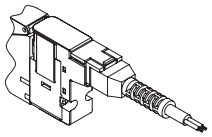

41 EJ type connector with cover (A)(B)(C) Circuit diagram ⓗ

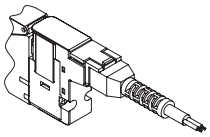

42 Terminal block (B)(C) Circuit diagram ⓖ

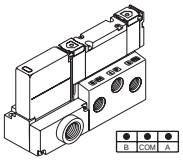

43 I/O connector (A)(B)(C) Circuit diagram ⓖ

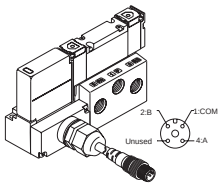

45 I/O connector (A)(B)(C)

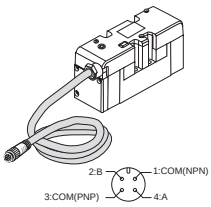

46 Individual wiring D-connector D* (A)(B)(C) Circuit diagram ⓖ

* **MN3E0/MN4E0 only**

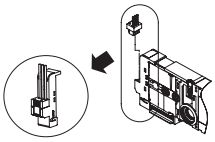

47 Individual wiring D-connector socket None, with socket/terminal D* (A)(B)(C) Circuit diagram ⓖ

* **MN3E0/MN4E0 only**

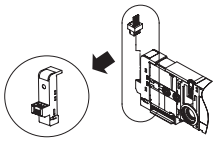

48 Individual wiring connector with lead wire C (A)(B)(C) Circuit diagram ⓖ

● **Lead wire length**
C : 300 mm
C0: 500 mm
C1:1000 mm
C2:2000 mm

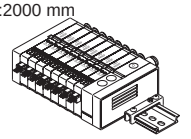

h DIN terminal box with surge suppressor/lamp

* With the MN4E Series
(Single)

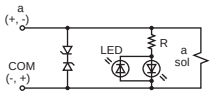

(Double)

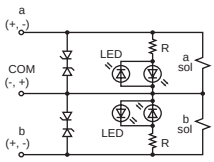

* For MN4S0 Series
(Single)

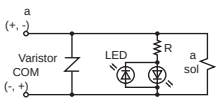

(Double)

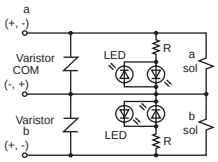

* With the 4G Series

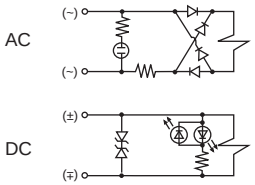

i Optional surge suppressor attached (AC/DC)

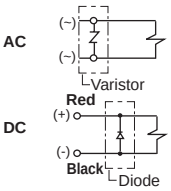

Diode has polarity.

Surge suppressor included
Use a surge suppressor when controlling the unit with semiconductors.
Use a lead wire that is 20/0.18.
With the DC model, only the grommet lead wire is the suppression type in the figure below.

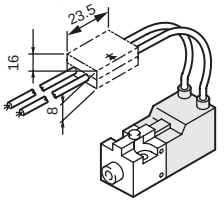

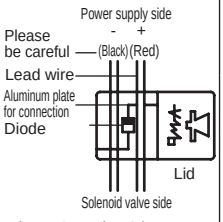

The AC and DC/B types have a varistor.
(There is no polarity.)

j DIN terminal box with surge suppressor/lamp

(Single)

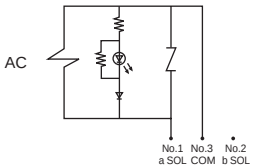

(Double)

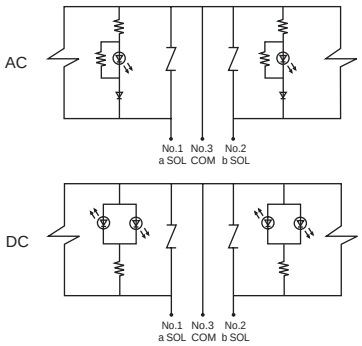

Pilot operated 3, 5-port valve 4G Series

Overview

User-friendly and environment-friendly space saving/high performance pneumatic 5-port valves.
Equipped with safety function for improved reliability/usability.
Suitable for operating cylinders of ø20 to ø160.

Features

Environmental performance

Continuous energizing OK
Reduced power consumption

Safety

The manual operating device is equipped with protection cover as standard
With internal exhaust check valve (4G1 to 3 Series)
The air supply port is equipped with filter as standard and a malfunction prevention mechanism is adopted for the connecting key (MN4G).

Reliable

Service life	Durability of 100 million operations or more (Single solenoid under our specified conditions)
Response time	12 ms ± 2 ms is realized (4G1 Series)
Low wattage	0.1 W (with low exoergic/ energy saving circuit) 0.35 W (standard products)

Easy to use

Wiring connector with common top/side
Reduced wiring connector/rotation
Tool-free manual operating device is adopted
4G1/4G2 mix manifold is available. (MN4G)

	Page
Product introduction	2
⚠ Safety precautions	850
Metal base **4GA1 to 3/4GB1 to 3** Series	7
Block manifold **MN4GA/4GB** Series	225
Master valve **4GA/4GB/M4GA/4GB** Series	321
With pressure sensor **4GB/M4GB/MN4GB** Series	347
Metal base **4GD1 to 3/4GE1 to 3** Series	437
Block manifold **MN4GD/4GE** Series	609
4GA4/4GB4 Series	697
Technical data	815

4G's new era.

The 4G Series is evolving.
With functions added for future use, the series responds to new demands while preserving the existing 4G Series concept.

Power consumption **0.1W** With low exoergic/ energy saving circuit

Power consumption **0.35W** Standard products

4GAB

Environmental performance

Continuous energizing OK
(With low exoergic/energy saving circuit)

4GAB

Uses a new coil actuator.

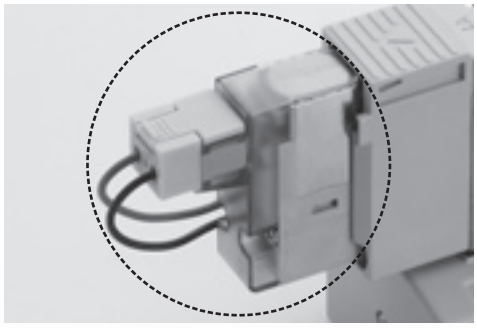

Reduced power consumption

4GAB

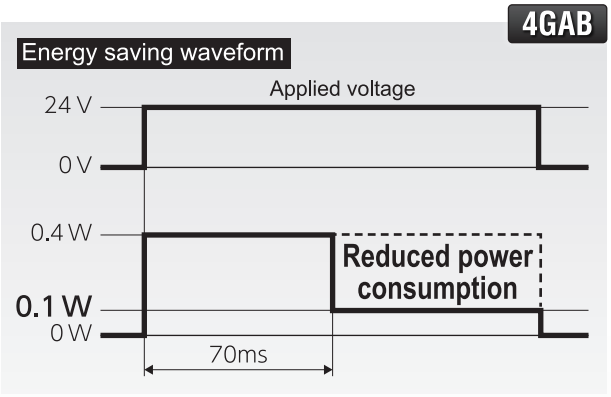

Safety

Prevents manual misoperation

Manual override has a protective cover.



Helps prevent misoperation problems

[Exhaust check valve]

Supports both metal base and resin block manifold (Model No. instructions)

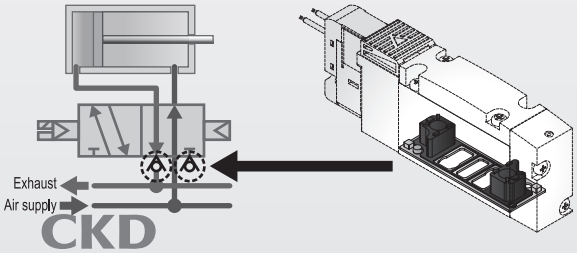

Prevents problems with foreign matter

- Air supply filter equipped as standard (A/B ports equipped as option)

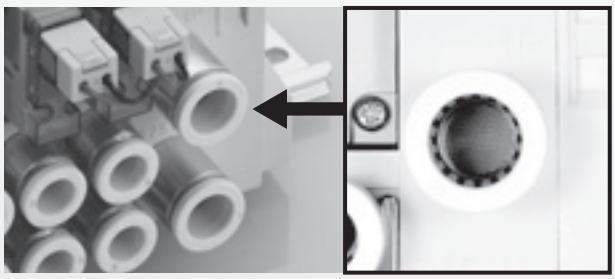

- Internal pilot filter equipped as standard.

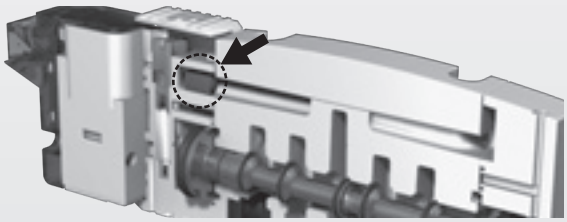

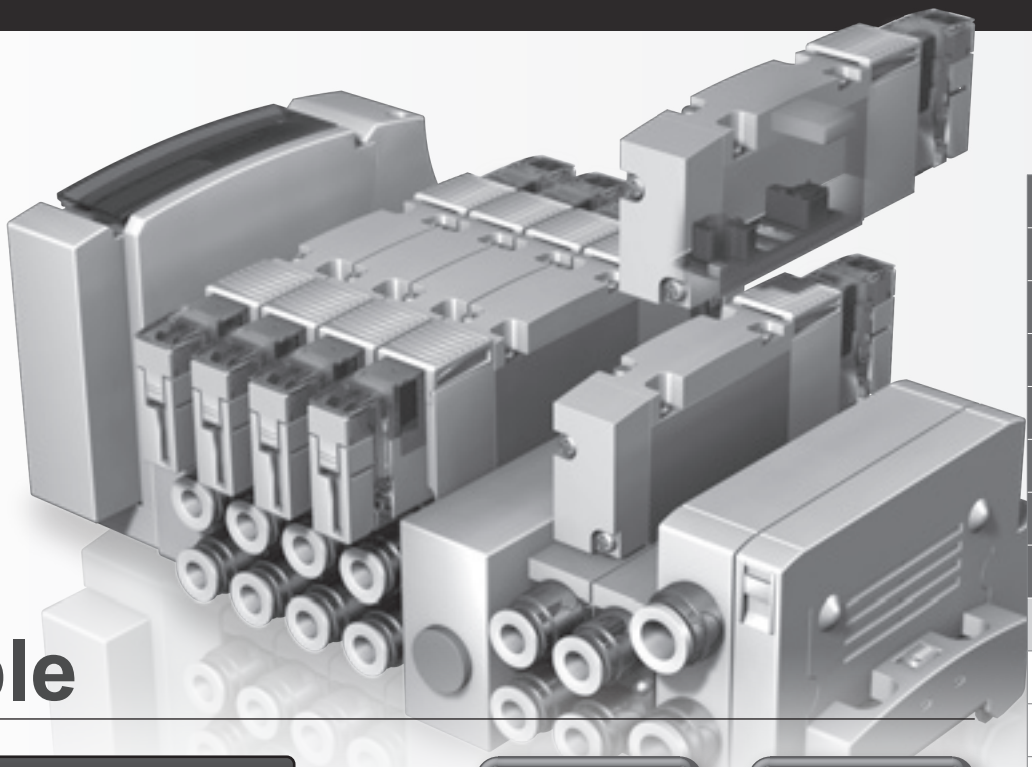

Reliable

Low sliding/long service life realized

Superb main valve sliding mechanism realizes low sliding/long service life. **4GAB**

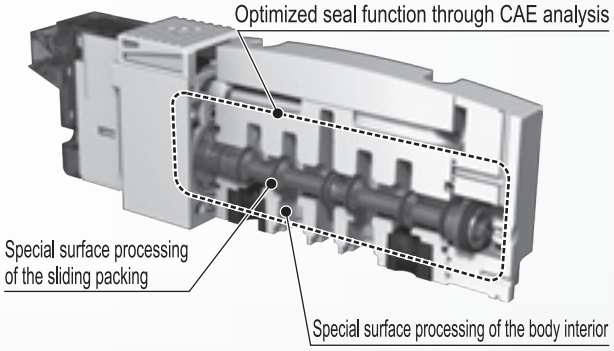

Durability count
More than 100 million operations
Single solenoid, under our regulated conditions
4GAB

Response time
12±2 ms
4G1

Improved responsivity after a shutdown

Smooth start even after time off. **4GAB**
Effective for Monday morning troubles and unexplained stoppages.

Easy to use

Wiring connector upward/lateral common

Easier to select. Also compatible with gauging installation changes.

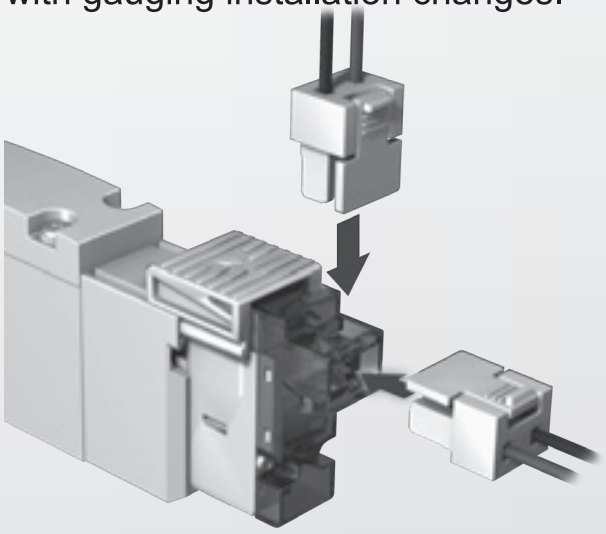

Uses a rotating connector

Orientation can be switched between upward and lateral.

Mixture of 2 sizes

Mix block enables manifold connection.

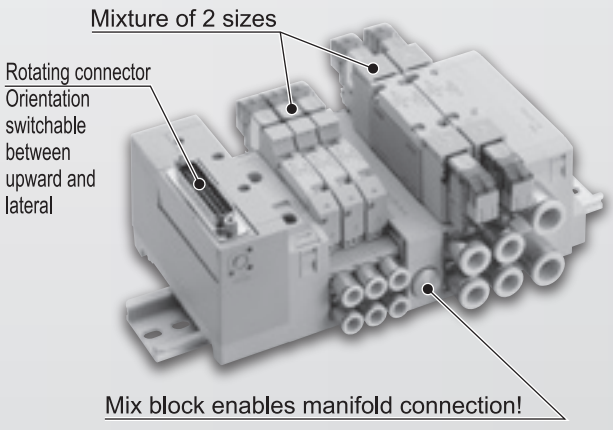

Diverse options

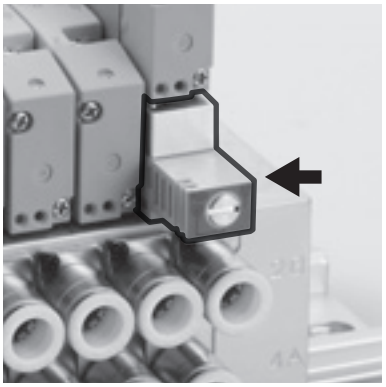

In-stop valve spacer

Valves can be replaced individually without stopping production line operation!

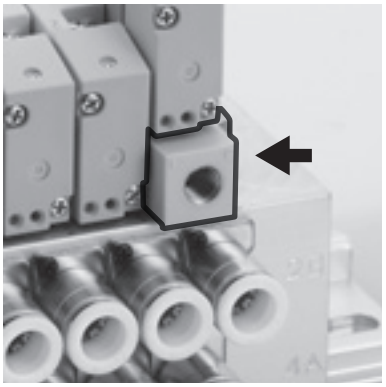

Air supply spacer

Ideal for cylinder thrust adjustment by increasing/decreasing individual valve pressure!

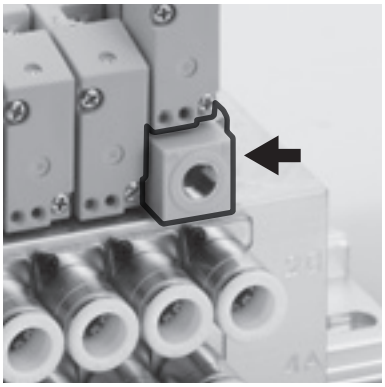

Exhaust spacer

Single acting cylinder malfunction prevention with individual exhaust!

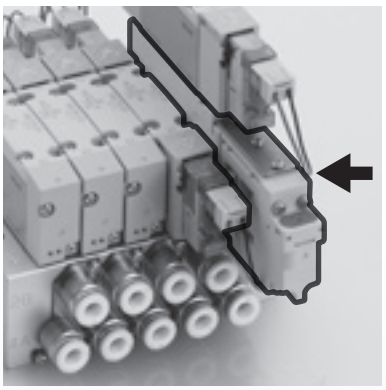

Aggregated pilot check valve spacer

Ideal for cylinder position locking and braking over long periods!





4G1 metal manifold for C8, 4G2 metal manifold for C10

Larger fitting enables increased cylinder operation speed!

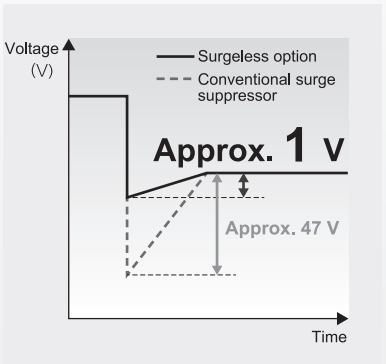

Voltage surgeless option

Coil surge voltage reduced by approx. 1 V to protect output contacts!

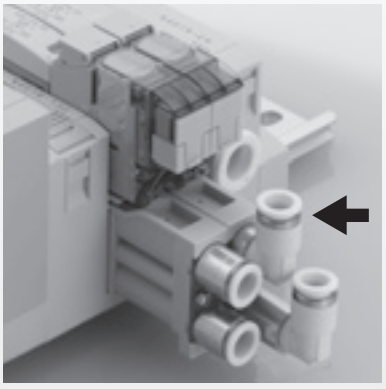

Pipe adaptor option for block manifold

Added piping direction variations increase the flexibility of valve installation!

Variety of options

1-port detection
Ideal for single and double operation detection.



2-port detection
Ideal for operation detection for two 3-port valve integrated types and 3-position types.

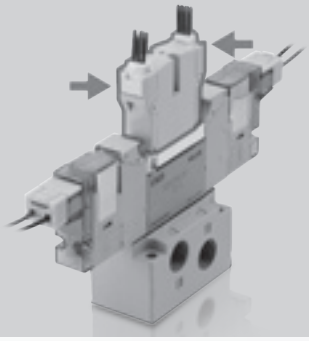

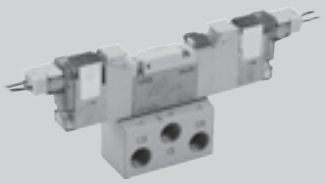



Manually discharge residual pressure

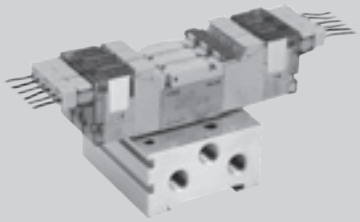



Safety design that prevents the protective cover from closing during operation

With pressure sensor

Direct connection of a pressure sensor to the 4G Series enables monitoring of secondary pressure beyond the valve.

Applications: · Preventative maintenance of cylinders and valves
· Operation confirmation of air-operated valves
· Alternatives to cylinder switches

With residual pressure exhaust

- Residual pressure in port A/B can be manually discharged without reducing source pressure.
- Safety design prevents protective cover from closing during manual operation.
- Residual pressure exhaust valve is not required within piping.

Automation communication protocols supported

EtherCAT, PROFIBUS-DP, ETHERNET/IP and CC-Link have 32 point output as networks in all levels of industry, available with both NPN and PNP current flow connections.

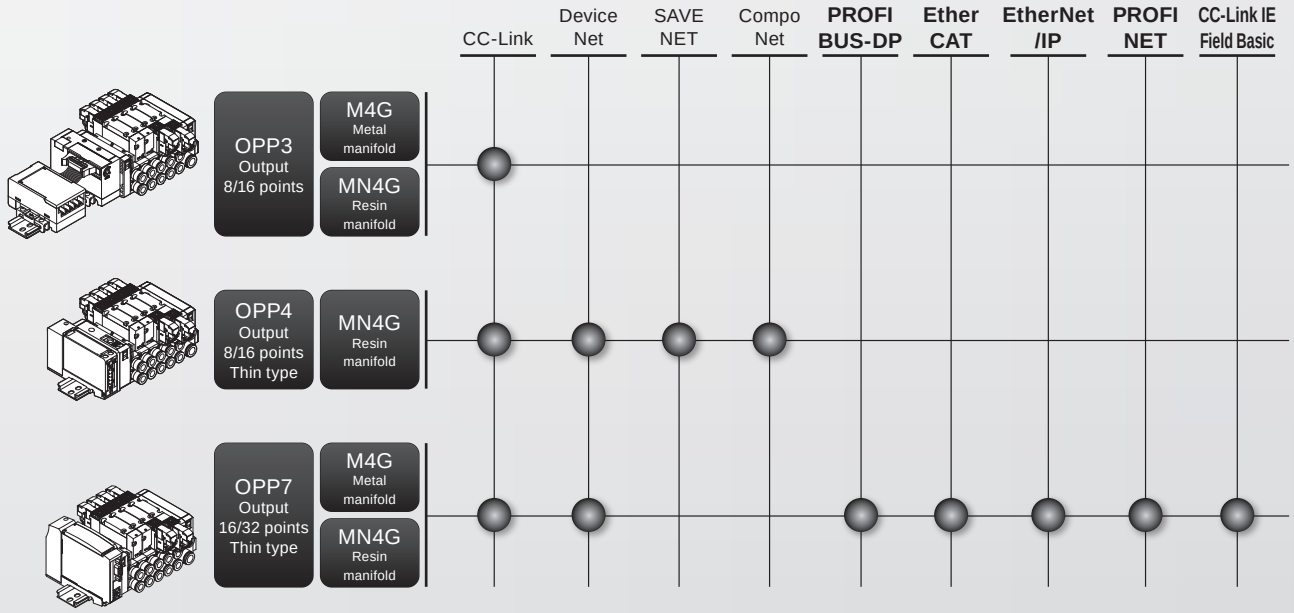

4GA/B, 4GD/E: Comparison of applications/environments

Look for: "Air quality and required options"		High-function 4GA/B R	Standard 4GD/E R
Reliable	Air quality: Ultra dry air/N2	◉	○
	Air quality: Dry air	◉	○
	Air quality: Oil-infiltrated air/low ozone	○	○
	Air quality: Drain air	◉	○
	Easy start-ups after long shutdown	◉	○
	Low vacuum	○	
Safety	Exhaust check function	○	○
	Manual misoperation prevention function	○	○
	Prevents problems with foreign matter	○	○
Easy to use	Piping direction change	○	
	External pilot	○	
	Piping connector upward/lateral common	○	○
	Tools not required for manual override	○	○

◉ Ideal ○ Compatible

4GA1 to 3/4GB1 to 3

Pilot operated 3, 5-port valve

Metal base

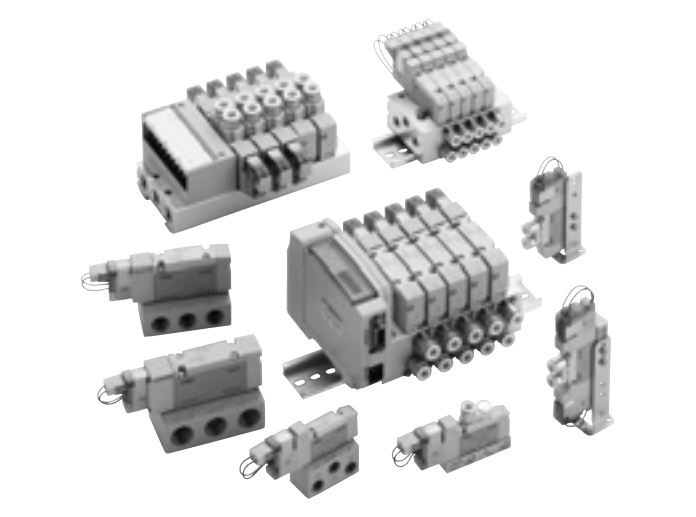

CONTENTS

Series variation 8
Electrical connections list (wire connections/circuit) 11
Product introduction 2

Discrete valve

● Body piping (3GA1 to 3/4GA1 to 3) 12
● Base piping (3GB1 to 2/4GB1 to 3) 60

Individual wiring manifold

● Body piping (M3GA1 to 3/M4GA1 to 3) 96
● Base piping (M3GB1 to 2/M4GB1 to 3) 112

Reduced wiring manifold

● Body piping (M3GA1 to 3-T *(D)/M4GA1 to 3-T *(D))
· Common terminal block/D sub-connector/flat cable connector/ Serial transmission 136
● Base piping (M3GB1 to 2-T*(D)/M4GB1 to 3-T*(D))
· Common terminal block/D sub-connector/flat cable connector/ Serial transmission 158

Related products (in-stop valve spacer/air supply spacer/ exhaust spacer/pilot check valve/silencer/plug/DIN rail) 188
Related parts 199
Manifold specifications sheet 208
Technical data
(1) Pneumatic system selection guide 844
(2) Notes on wiring 815
(3) Exhaust check valve 851
(4) How to expand reduced wiring manifold 836
⚠ Safety precautions 850

Series variation

4GA1 to 3 / 4GB1 to 3 Series

* For the block manifold, refer to page 225.
* Refer to page 321 for master valve.

Series external appearance						Model No.	Position Number of solenoid valves JIS symbol	Valve performance: Flow characteristics (dm^3/(sbar)) (*1)	Valve performance: Cylinder bore size (ø)	Voltage (V)	Switching position: 2-position: Normally closed	Switching position: 2-position: Normally open	Switching position: 2-position: Single	Switching position: 2-position: Double	Switching position: 3-position: All ports closed	Switching position: 3-position: ABR connection	Switching position: 3-position: PAB connection
Single unit	3GA110R-E* 4GA120R-E* 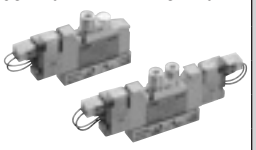	Body piping	3-port			3GA1	● 3-port valve 2-position single NC 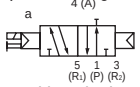	0.66 to 0.70	20 to 40	100 VAC 200 VAC 24 DC 12 DC 3 DC 5 DC (*2)	●	●					
						3GA2		2.2 to 2.7	40 to 80		●	●					
						3GA3		3.9	63 to 100		●	●					
			5-port			4GA1		0.66 to 0.70	20 to 40				●	●	●	●	●
						4GA2		2.4 to 2.7	40 to 80				●	●	●	●	●
						4GA3	2-position single NO 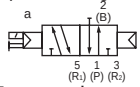	3.2 to 4.0	63 to 100				●	●	●	●	●
	4GB310R-E* 	Base piping	3-port			3GB1		1.0	20 to 40								
						3GB2		2.1	40 to 80								
			5-port			4GB1	● 5-port valve 2 position single 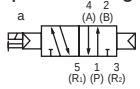	1.1 to 1.3	20 to 40				●	●	●	●	●
						4GB2		2.2 to 2.5	40 to 80				●	●	●	●	●
						4GB3		3.2 to 4.2	63 to 100				●	●	●	●	●
Individual wiring manifold	M4GA280R-E*D 	Body piping	Direct mount DIN rail mount (-D)			M4GA1	2-position double 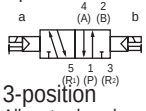	0.66 to 1.0	20 to 40	100 VAC 200 VAC 24 DC 12 DC 3 DC 5 DC (*2)	●	●	●	●	●	●	●
						M4GA2		1.7 to 2.5	40 to 80		●	●	●	●	●	●	●
						M4GA3		2.5 to 3.3	63 to 100		●	●	●	●	●	●	●
	M4GB110R-E*D 	Base piping	Direct mount DIN rail mount (-D)			M4GB1		0.67 to 1.0	20 to 40				●	●	●	●	●
						M4GB2		1.6 to 2.4	40 to 80				●	●	●	●	●
						M4GB3	3-position All ports closed 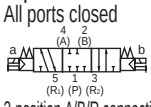	2.6 to 3.3	63 to 100				●	●	●	●	●
Reduced wiring manifolds	M4GA280R-T10 	Body piping	Direct mount	Terminal block (-T1□) Connector (-T30, -T5□)		M4GA1		0.66 to 1.0	20 to 40	24 DC 12 DC	●	●	●	●	●	●	●
						M4GA2		1.7 to 2.5	40 to 80		●	●	●	●	●	●	●
						M4GA3	3-position A/B/R connection 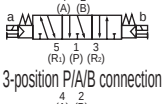	2.5 to 3.3	63 to 100		●	●	●	●	●	●	●
				Serial transmission (-T8□)		M4GA1		0.66 to 1.0	20 to 40	24 DC	●	●	●	●	●	●	●
						M4GA2		1.7 to 2.5	40 to 80		●	●	●	●	●	●	●
						M4GA3	3-position P/A/B connection 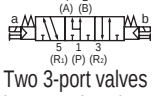	2.5 to 3.3	63 to 100		●	●	●	●	●	●	●
	M4GA180R-T8D 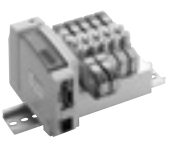		Mount type DIN rail	Terminal block (-T1□D) Connector (-T30D, -T5□D)		M4GA1		0.66 to 1.0	20 to 40	24 DC 12 DC	●	●	●	●	●	●	●
						M4GA2		1.7 to 2.5	40 to 80		●	●	●	●	●	●	●
						M4GA3	● Two 3-port valves integrated NC/NC 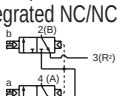	2.5 to 3.3	63 to 100		●	●	●	●	●	●	●
				Serial transmission (-T6G1D) (-T8□D)		M4GA1		0.66 to 1.0	20 to 40	24 DC	●	●	●	●	●	●	●
						M4GA2		1.7 to 2.5	40 to 80		●	●	●	●	●	●	●
						M4GA3	NC/NO 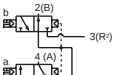	2.5 to 3.3	63 to 100		●	●	●	●	●	●	●
	M4GB210R-T8* 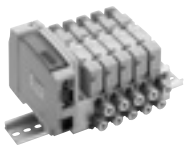	Base piping	Direct mount	Terminal block (-T1□) Connector (-T30, -T5□)		M4GB1		0.67 to 1.0	20 to 40	24 DC 12 DC			●	●	●	●	●
						M4GB2		1.6 to 2.4	40 to 80				●	●	●	●	●
						M4GB3		2.6 to 3.3	63 to 100				●	●	●	●	●
				Serial transmission (-T8□)		M4GB1		0.66 to 1.0	20 to 40	24 DC			●	●	●	●	●
						M4GB2		1.7 to 2.5	40 to 80				●	●	●	●	●
						M4GB3	NO/NC 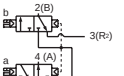	2.5 to 3.3	63 to 100				●	●	●	●	●
			Mount type DIN rail	Terminal block (-T1□D) Connector (-T30D, -T5□D)		M4GB1		0.67 to 1.0	20 to 40	24 DC 12 DC			●	●	●	●	●
						M4GB2		1.6 to 2.4	40 to 80				●	●	●	●	●
						M4GB3	NO/NO 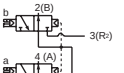	2.6 to 3.3	63 to 100				●	●	●	●	●
				Serial transmission (-T6G1D) (-T8□D)		M4GB1		0.67 to 1.0	20 to 40	24 DC			●	●	●	●	●
						M4GB2		1.6 to 2.4	40 to 80				●	●	●	●	●
						M4GB3		2.6 to 3.3	63 to 100				●	●	●	●	●

CKD

*1: Effective cross-sectional area S and sonic conductance C are converted as S ≈ 5.0 X C.
*2: The grommet lead wire specifications are for DC voltages only.
*3: The two 3-port valves integrated type is compatible with 3GA1, 2 and 3GB1, 2.
*4: P/R piping port is either M5 or Rc thread.
*5: Only compatible with base piping 2-position single model.
*6: P/R piping port is NPT thread.
*7: P/R piping port is G thread.
*8: Specifications for reduced wiring equipped manifolds. Only 12/24 VDC is supported.
*9: "○" indicates made to order.

Switching position		A/B Piping port (*4)																					A/B piping port (*6, *9)									A/B piping port (*7)								Electrical connections										Page
		Barbed fitting	Push-in fitting					Push-in L-fitting (upward) (*5)					Push-in L-fitting (downward)					Female thread				Push-in fitting					Female thread				Push-in fitting				Female thread				Single unit, individual wiring				Reduced wiring					
Two 3-port valves integrated (*3)	Mix	ø 1.8	ø 1.8	ø4	ø6	ø8	ø10	ø 1.8	ø4	ø6	ø8	ø10	ø 1.8	ø4	ø6	ø8	ø10	M 5	Rc 1/8	Rc 1/4	Rc 3 /8	ø 1/8Inching	ø 5/32Inching	ø 1/4Inching	ø 5/16Inching	ø 3 /8Inching	M 5	NPT1/8	NPT1/4	NPT3 /8	ø4	ø6	ø8	ø10	M 5	G 1/8	G 1/4	G 3 /8	Grommet lead (*2)	E-connector	EJ-connector	DIN terminal box	A-connector (*8)	Common terminal block	D-sub-connector	Flat cable with power supply terminal	Serial transmission	Serial transmission	
		CF	C1B	C4	C6	C8	C10	CL1B	CL4	CL6	CL8	CL10	CD1B	CD4	CD6	CD8	CD10	M5	06	08	10	C3N	C4N	C6N	C8N	C10N	M5N	06 N	08 N	10 N	C4G	C6G	C8G	C10G	M5G	06G	08G	10G	Blank	E□	EJ□	B□	A2N	T1□	T3□	T5□	T6G1	T8□	
●		●	●	●	●													●				●	●																●	●	●								
●				●	●	●													●					●	●			●			●	●	●			●			●	●	●	●						12
					●	●	●													●						○	○		○				●	●			●			●	●	●	●					
		●	●	●	●													●				●	●																●	●	●								
				●	●	●														●				●	●			●			●	●	●			●			●	●	●	●						12
					●	●	●													●						○	○		○				●	●			●			●	●	●	●					
●																			●					●				●								●			●	●	●							60
●																				●									●								●			●	●	●	●					
																			●					●				●								●			●	●	●							60
																				●									●								●			●	●	●	●					
																					●									○	○								●	●		●	●	●	●					
●	●	●	●	●	●													●				●	●				●				●	●			●			●	●	●							
●	●			●	●	●													●				●	●	●			●				●	●	●		●			●	●	●	●						96
	●				●	●	●													●					●	●			●								●			●	●	●	●					
●	●	●	●	●	●			●	●	●			●	●	●			●				●	●				●				●	●			●			●	●	●							
●	●			●	●	●				●	●				●	●			●				●	●	●			●				●	●	●		●			●	●	●	●						112
	●				●	●	●				●	●				●	●			●					●	●			●								●			●	●	●	●					
●	●	●	●	●	●													●				●	●				●				●	●			●							●	●	●				
●	●			●	●	●													●				●	●	●			●				●	●	●		●							●	●	●				136
	●				●	●	●													●					●	●			●								●							●	●	●			
●	●	●	●	●	●													●				●	●				●				●	●			●							●					●
●	●			●	●	●													●				●	●	●			●				●	●	●		●							●				136	●
	●				●	●	●													●					●	●			●								●							●					●
●	●	●	●	●	●													●				●	●				●				●	●			●							●	●	●			
●	●			●	●	●													●				●	●	●			●				●	●	●		●							●	●	●				136
	●				●	●	●													●					●	●			●								●							●	●	●			
●	●	●	●	●	●													●				●	●				●				●	●			●										●	●	
●	●			●	●	●													●				●	●	●			●				●	●	●		●										●	●	136
	●				●	●	●													●					●	●			●								●										●	●	
●	●	●	●	●	●			●	●	●			●	●	●			●				●	●				●				●	●			●			●	●	●							
●	●			●	●	●				●	●				●	●			●				●	●	●			●				●	●	●		●							●	●	●				158
	●				●	●	●				●	●				●	●			●					●	●			●								●												
●	●	●	●	●	●													●				●	●				●				●	●			●							●					●
●	●			●	●	●													●				●	●	●			●				●	●	●		●							●				158	●
	●				●	●	●													●					●	●			●								●							●					●
●	●	●	●	●	●			●	●	●			●	●	●			●				●	●				●				●	●			●			●	●	●							
●	●			●	●	●				●	●				●	●			●				●	●	●			●				●	●	●		●							●	●	●				158
	●				●	●	●				●	●				●	●			●					●	●			●								●												
●	●	●	●	●	●													●				●	●				●				●	●			●			●	●	●							●
●	●			●	●	●													●				●	●	●			●				●	●	●		●							●	●	●				158	●
	●				●	●	●													●					●	●			●								●							●					●

Electrical connections

Discrete valve/individual wiring manifold

Blank Grommet lead wire Ⓐ

● **Lead wire length**
300 mm

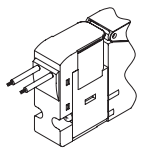

E0 E-connector Ⓐ

● **Lead wire length**
300 mm
500 mm
1000 mm
2000 mm
3000 mm

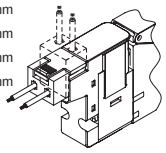

E0N E-connector without socket

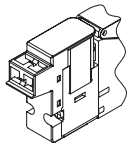

E1 E-connector with socket/terminal

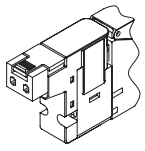

E2 E-connector ⒶⒷⒸ

● **Lead wire length**
300 mm
500 mm
1000 mm
2000 mm
3000 mm

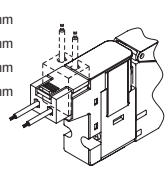

E2N E-connector without socket ⒷⒸ

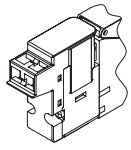

E3 E-connector with socket/terminal ⒷⒸ

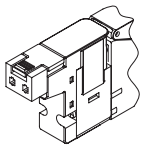

A2N A-connector downward without socket

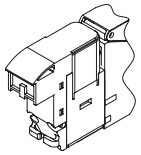

● For AC voltages, the ⓐ dimension is 3.5 mm longer than for DC voltages.

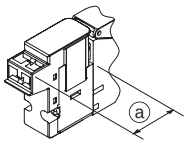

B BN DIN terminal box (BN: Without terminal box)

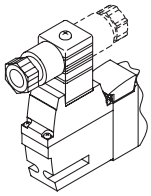

E0*J EJ-connector Ⓐ

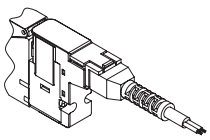

E2*J EJ-connector ⒶⒷⒸ

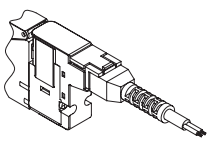

T10 T11 Common terminal block (left side) M3 thread specifications/ push tightening specifications

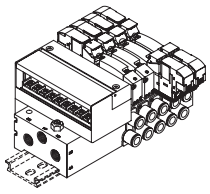

T10R T11R Common terminal block (right side) M3 thread specifications/ push tightening specifications

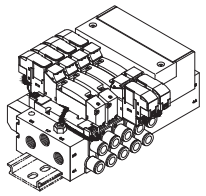

T30 D-sub-connector (left)

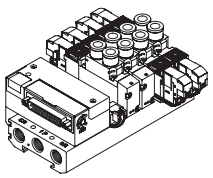

T30R D-sub-connector (right)

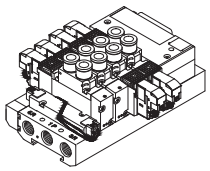

T50 Flat cable with power supply terminal (left side)

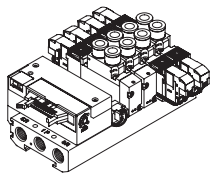

T50R Flat cable with power supply terminal (right side)

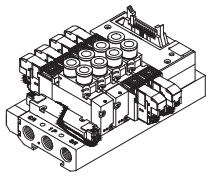

T51 T52 T53 Flat cable Without power supply terminal (left side)

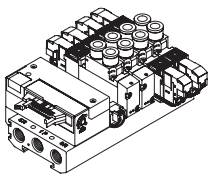

T51R T52R T53R Flat cable Without power supply terminal (right side)

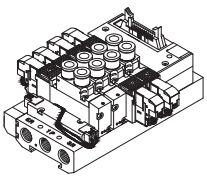

T6G1 Serial transmission

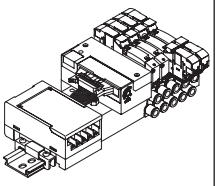

T8*½ Serial transmission (thin)

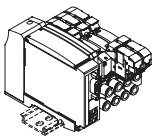

Ⓐ: With lead wire
Ⓑ: With indicator lamp
Ⓒ: With surge suppressor

Manual override

Blank Non-locking/locking common type

(Standard equipment)

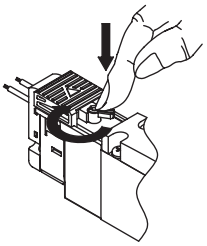

(1) For non-locking, push to turn ON, release to turn OFF

(2) For locking, push and turn 90° clockwise to hold the ON state. Turn counterclockwise to release OFF

M Non-locking

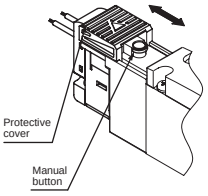

Other options

H With exhaust check valve

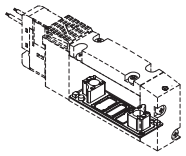

Standard for pilot exhaust

P Mounting plate

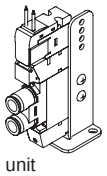

Single unit
(only body piping)

K External pilot

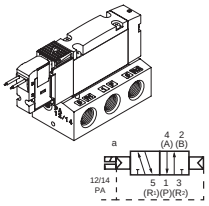

A Ozone/coolant proof product

Select for coolant inflow
and ozone measures.

F A/B port filter integrated

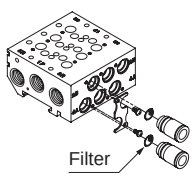

Pilot check valve (separated)

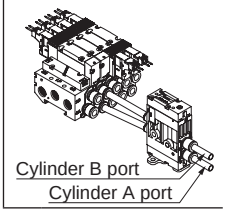

Electric connection circuit diagram

Other options

G1 G2 With pressure sensor

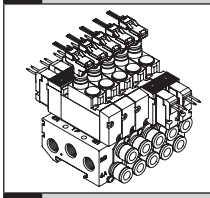

X X1 With residual pressure exhaust

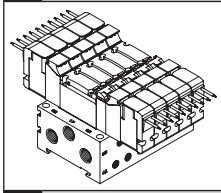

Z1 Z3 Air supply spacer Exhaust spacer

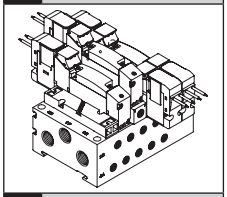

Z2 In-stop valve spacer

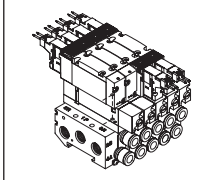

Z6 Spacer pilot check valve

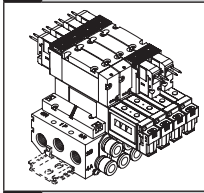

D DIN rail mount

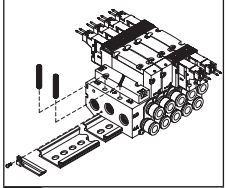

D Double wiring (With single spare wiring)

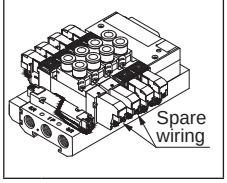

	Electrical connections		Without lead wire	With lead wire	With indicator lamp	With surge suppressor	Without socket	Circuit diagram
	Blank	Grommet lead wire		●				DC
	E0	E-connector		●				DC
	E0*J	EJ-connector		●				DC
	E0N	E-connector					●	100 VAC / 200 VAC
	E1	E-connector	●					100 VAC / 200 VAC
	E2	E-connector		●	●	●		DC
	E2*J	EJ-connector		●	●	●		DC
	E2N	E-connector			●	●	●	100 VAC / 200 VAC
	E3	E-connector	●		●	●		100 VAC / 200 VAC
	A2N	A-connector			●	●	●	DC
	B	DIN terminal box	●		●	●		DC
	BN	DIN terminal box (Without terminal box)	●			●		100 VAC / 200 VAC
Option S	E2	E-connector		●	●	●		DC
Option S	E2*J	EJ-connector		●	●	●		DC
Option S	E2N	E-connector			●	●	●	DC
Option E	E2	E-connector		●	●	●		DC
Option E	E2*J	EJ-connector		●	●	●		DC
Option E	E2N	E-connector			●	●	●	DC

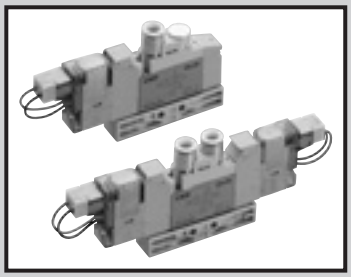

Discrete valve
Body piping

3GA1/2/3, 4GA1/2/3 Series

● Cylinder bore size: ø20 to ø100

JIS symbol

● 3-port valve

2-position single NC

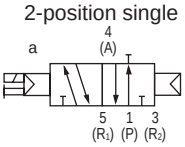

2-position single NO

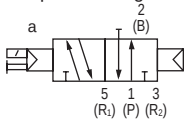

● Two 3-port valves integrated

(A side valve: NC, B side valve: NC)

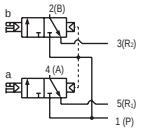

(A side valve:NC, B side valve:NO)

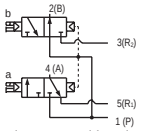

(A side valve: NO, B side valve: NC)

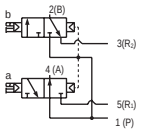

(A side valve: NO, B side valve: NO)

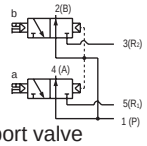

● 5-port valve

2 position single

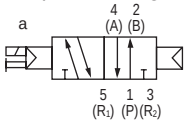

2-position double

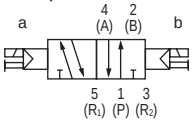

3-position
All ports closed

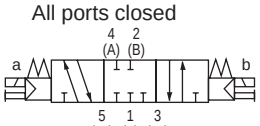

3-position A/B/R connection

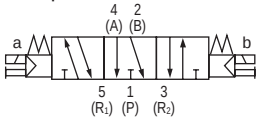

3-position P/A/B connection

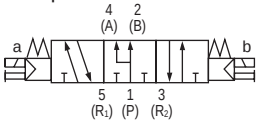

Common specifications

Item	Description
Valve and operation	Pilot operated soft spool valve
Working fluid	Compressed air
Max. working pressure MPa	0.7
Min. working pressure MPa	0.2
Proof pressure MPa	1.05
Ambient temperature °C	-5 to 55 (no freezing)
Fluid temperature °C	5 to 55
Manual override	Non-locking/locking common (standard)
Pilot exhaust method	Main valve/pilot valve common exhaust
Lubrication *1	Not required
Degree of protection*2	Dust-proof
Vibration resistance m/s²	50 or less
Shock resistance m/s²	300 or less
Atmosphere	Cannot be used in corrosive gas environments

*1 Use turbine oil Class 1 ISO VG32 for lubrication. Excessive or intermittent lubrication results in unstable operation.

*2 Avoid dripping water or oil, etc., during use. IP65 (water jet proof) applies for DIN terminal box specifications. However, the specified outer diameter of the cord and tightening torque must be used for fixing in place.

Electrical specifications

Item		Description					
Rated voltage V		24 DC	12 DC	5 DC	3 DC	100 AC	200 AC
Voltage fluctuation range		±10%					
Holding current (A) (*3)	Standard	0.015 (0.017)	0.030 (0.034)	0.072 (0.082)	0.120 (0.136)	0.009 (0.009)	0.006 (0.006)
	With low exoergic/ energy circuit	0.005	0.010	-		-	
Power consumption W (*3)	Standard	0.35 (0.40)		0.35 (0.40)		-	
	With low exoergic/ energy circuit	0.1		-		-	
Apparent power VA (*3)	Standard	-		-		0.93 (0.98)	1.20 (1.40)
Thermal class		B					
Surge suppressor		Option					
Indicator		Lamp (option)					

*3 Values in ( ) apply when lamp is included. In addition, the type with low exoergic/energy circuit is only available with lamp.

Individual specifications

Port size		3GA1/4GA1	3GA2/4GA2	3GA3/4GA3
Rc thread, M5	Port A/B	Barbed fitting ø1.8 Push-in fitting ø1.8, ø4, ø6 M5	Push-in fitting ø4, ø6, ø8 Rc1/8	Push-in fitting ø6, ø8, ø10 Rc1/4
	Port P/R1/R2	M5	Rc1/8	Rc1/4
NPT thread, M5	Port A/B	Push-in fitting ø1/8", ø5/32"	Push-in fitting ø1/4", ø5/16" NPT1/8	Push-in fitting ø5/16", ø3/8" NPT1/4 (*4)
	Port P/R1/R2	M5	NPT1/8	NPT1/4 (*4)
G thread	Port A/B	-	Push-in fitting ø4, ø6, ø8 G1/8	Push-in fitting ø8, ø10 G1/4
	Port P/R1/R2	-	G1/8	G1/4

*4: Available as made to order.

Performance / Characteristics by model

Item			3GA1		3GA2		3GA3		4GA1		4GA2		4GA3	
			ON	OFF	ON	OFF	ON	OFF	ON	OFF	ON	OFF	ON	OFF
Response time ms	Two 3-port valves integrated		9	12	12	29	-	-	-	-	-	-	-	-
	2-position	Single	12	12	19	19	25	28	12	12	19	19	25	28
		Double	-	-	-	-	-	-	9	-	18	-	24	-
	3-position	ABR connection	-	-	-	-	-	-	8	15	17	30	23	45

Values with lamp/surge suppressor are shown. The response times are values with working pressure of 0.5 MPa at 20°C, without lubrication. They depend on the pressure and the lubricant quality.

Weight

Item				3GA1	3GA2	3GA3	4GA1	4GA2	4GA3
Weight g	2-position	Single	Grommet lead wire	48 (41)	104 (74)	142 (100)	48 (41)	109 (79)	151 (109)
			E-connector	50 (43)	106 (76)	144 (102)	50 (43)	111 (81)	153 (111)
			DIN terminal box	-	141 (111)	177 (135)	-	146 (116)	186 (144)
		Double	Grommet lead wire	-	-	-	65 (58)	127 (97)	174 (128)
			E-connector	-	-	-	69 (62)	131 (101)	178 (132)
			DIN terminal box	-	-	-	-	169 (139)	214 (168)
	3-position	All ports closed	Grommet lead wire	-	-	-	67 (60)	139 (109)	183 (141)
			E-connector	-	-	-	71 (64)	143 (113)	187 (145)
			DIN terminal box	-	-	-	-	181 (151)	223 (181)

・Values in ( ) do not include the pipe adaptor. Values for the E-connector include the socket assembly (with 300 mm lead wire). For the EJ-connector, add 16 g/connector to the E-connector weight.
・The weight of the two 3-port valves integrated type is the same as that of 2-position double.

Flow characteristics

Model No.	Solenoid position		P→A/B		A/B→R1/R2	
			C[dm³/(s·bar)]	b	C[dm³/(s·bar)]	b
3GA1 4GA1	Two 3-port valves integrated		0.98	0.45	0.71	0.34
	2-position		1.2	0.47	0.72	0.37
	3-position	All ports closed	1.1	0.39	0.70	0.34
		ABR connection	1.1	0.33	0.72	0.34
		PAB connection	1.3	0.61	0.72	0.36
3GA2 4GA2	Two 3-port valves integrated		1.8	0.29	2.3	0.32
	2-position		2.4	0.33	2.8	0.30
	3-position	All ports closed	2.2	0.28	2.5	0.28
		ABR connection	2.3	0.26	2.8	0.27
		PAB connection	2.5	0.38	2.4	0.30
3GA3 4GA3	2-position		3.4	0.29	4.0	0.24
	3-position	All ports closed	3.1	0.27	3.4	0.28
		ABR connection	3.1	0.33	4.1	0.20
		PAB connection	3.5	0.43	3.4	0.32

*1: Effective cross-sectional area S and sonic conductance C are converted as S ≈ 5.0 × C.

Ozone-proof specifications ・ Coolant proof specifications

Can be selected with “How to order” Item Ⓔ option “A” on page 14.

Clean-room specifications

● Anti-dust generation structure for use in cleanrooms

** - Voltage - **P7***

Specifications for rechargeable battery (Catalog No. CC-1226A)

● For use in the rechargeable battery manufacturing process, materials used for air path and sliding section are limited

** - Voltage - **P4**

CE marking specifications

** - Voltage - **ST**

・Standard 24 VDC below voltage is CE marking-compliant even if “ST” is not indicated in the model No.

3GA1/2/3, 4GA1/2/3 Series

Discrete valve; body piping

How to order

4GA1 1 0 R - C6 - E2 - 1

3GA1 1 0 R - C6 - E2 - 1

Discrete valve for integrated base

4GA1 1 9 R - C6 - E2 H - 3

Discrete 3-port valve for base mounting

3GA1 1 9 R - C6 - E2 H - 3

Ⓑ Solenoid position

Ⓐ Model No.

Ⓒ Port size *3

Ⓓ Electrical connections
Refer to page 11 for the circuit diagram with surge suppressor/lamp.

Ⓔ Option

Ⓕ Voltage

Code	Description		Ⓐ Model No. 3GA1	3GA2	3GA3	4GA1	4GA2	4GA3
Ⓑ Solenoid position								
1	2 position single					●	●	●
2	2-position double					●	●	●
3	3-position all ports closed					●	●	●
4	3-position ABR connection					●	●	●
5	3-position PAB connection					●	●	●
1	2-position single normally closed (*1)		●	●	●			
11	2-position single normally open (*1)		●	●	●			
66	Two 3-port valves integrated (*2)	A side valve: Normally closed B side valve: Normally closed	●	●				
67	Two 3-port valves integrated (*2)	A side valve: Normally closed B side valve: Normally open	●	●				
76	Two 3-port valves integrated (*2)	A side valve: Normally open B side valve: Normally closed	●	●				
77	Two 3-port valves integrated (*2)	A side valve: Normally open B side valve: Normally open	●	●				

Ⓒ Port size								
Port	4(A)/2(B)Port	Port P/R1/R2 (5) = M5, (1/8) = Rc1/8, (1/4) = Rc1/4					
CF	ø1.8 barbed fitting (Compatible tube UP-9102-**)	(1)			(1)		
C18	ø1.8MPush-in fitting (Compatible tube UP-9402-**)	(1)			(1)		
C4	ø4 push-in fitting	(1)	(2)		(1)	(2)	
C6	ø6 push-in fitting	(1)	(2)	(3)	(1)	(2)	(3)
C8	ø8 push-in fitting		(2)	(3)		(2)	(3)
C10	ø10 push-in fitting			(3)			(3)
M5	M5	(1)			(1)		
06	Rc1/8		(2)			(2)	
08	Rc1/4			(3)			(3)
Port	4(A)/2(B)Port	Port P/R1/R2 (5) = M5, (1/8) = 1/8NPT, (1/4) = 1/4NPT					
C3N	ø1/8" push-in fitting	(1)			(1)		
C4N	ø5/32" push-in fitting	(1)			(1)		
C6N	ø1/4" push-in fitting		(5)			(5)	
C8N	ø5/16" push-in fitting (*4)		(5)	(6)		(5)	(6)
C10N	ø3/8" push-in fitting (*4)			(6)			(6)
06 N	NPT1/8		(5)			(5)	
08 N	NPT1/4 (*4)			(6)			(6)
Port	4(A)/2(B)Port	Port P/R1/R2 (1/8) = G1/8 (9)=G1/4					
C4G	ø4 push-in fitting		(8)			(8)	
C6G	ø6 push-in fitting		(8)			(8)	
C8G	ø8 push-in fitting		(8)	(9)		(8)	(9)
C10G	ø10 push-in fitting			(9)			(9)
06G	G1/8		(8)			(8)	
08G	G1/4			(9)			(9)

Ⓓ Electrical connections
Refer to the electrical connection list on next page.

Ⓔ Option							
Blank	Non-locking/Locking common manual override	●	●	●	●	●	●
M	Manual override of non-locking	●	●	●	●	●	●
H	With exhaust check valve (*5)	●	●	●	●	●	●
P	With mounting plate	●	●	●	●	●	●
A	Ozone/coolant proof	●	●	●	●	●	●
S	Surgeless (*6)	●	●	●	●	●	●
E	Low exoergic/energy saving circuit (*6), (*7)	●	●	●	●	●	●
F	Port A/B filter integrated (8)	●	●	●	●	●	●

Ⓕ Voltage							
1	100 VAC (rectifier integrated)	●	●	●	●	●	●
2	200 VAC (rectifier integrated)	●	●	●	●	●	●
3	24 VDC	●	●	●	●	●	●
4	12 VDC	●	●	●	●	●	●
7	3 VDC	○	○	○	○	○	○
8	5 VDC	○	○	○	○	○	○

indicates manufacturing is not possible.
○ indicates made to order.

Precautions for model No. selection

*1 : For the 3GA normally closed, the piping connection 2 (B) and 3 (R2) ports are plugged. For 3GA normally open type, avoid plugging the 5 (R1) port. Otherwise, malfunctions may result.
*2 : Dimensions are the same as the respective 2-position double solenoid.
*3 : Refer to page 98 for the available port sizes of single valves for integrated base
*4 : 4G3 is a custom order product.
***5 : 3-position all ports closed and PAB connection are not provided with the exhaust check valve. Refer to page 851 for details on the exhaust check valve.**
6 : E2 type and E2*J type connectors support 12/24 VDC only. In addition, surgeless "S" and low exoergic/energy-saving circuit "E" cannot be selected together.
*7 : Surgeless specifications.
*8 : A filter is built into the P-port as standard.

[Electrical connections list]

Ⓓ Electrical connections		Ⓐ Model No. 3GA1	3GA2	3GA3	4GA1	4GA2	4GA3
Blank	Grommet lead wire (300 mm) (*9)	●	●	●	●	●	●
B	DIN terminal box (Pg7) With surge suppressor/indicator lamp (*10) (*12)		●	●		●	●
BN	DIN term. box (Pg7) (without terminal box) With surge suppressor(*10)(*12)		●	●		●	●
E-connector (upward/lateral common)							
E0	Lead wire (300 mm) (*11)	●	●	●	●	●	●
E00	Lead wire (500 mm) (*11)	●	●	●	●	●	●
E01	Lead wire (1000 mm) (*11)	●	●	●	●	●	●
E02	Lead wire (2000 mm) (*11)	●	●	●	●	●	●
E03	Lead wire (3000 mm) (*11)	●	●	●	●	●	●
E0N	Without lead wire (without socket)	●	●	●	●	●	●
E1	Without lead wire (socket/terminal attached) (*11)	●	●	●	●	●	●
E2	Lead wire (300 mm), surge suppressor/indicator lamp	●	●	●	●	●	●
E20	Lead wire (500 mm), surge suppressor/indicator lamp	●	●	●	●	●	●
E21	Lead wire (1000 mm), surge suppressor/indicator lamp	●	●	●	●	●	●
E22	Lead wire (2000 mm), surge suppressor/indicator lamp	●	●	●	●	●	●
E23	Lead wire (3000 mm), surge suppressor/indicator lamp	●	●	●	●	●	●
E2N	No lead wire (without socket), surge suppressor/indicator lamp	●	●	●	●	●	●
E3	No lead wire (with socket/terminal), surge suppressor/indicator lamplamp	●	●	●	●	●	●
EJ type connector (Socket with cover, upward/lateral common)							
E01J	Lead wire (1000 mm) (*11)	●	●	●	●	●	●
E02J	Lead wire (2000 mm) (*11)	●	●	●	●	●	●
E03J	Lead wire (3000 mm) (*11)	●	●	●	●	●	●
E21J	Lead wire (1000 mm), surge suppressor, indicator lamp	●	●	●	●	●	●
E22J	Lead wire (2000 mm), surge suppressor, indicator lamp	●	●	●	●	●	●
E23J	Lead wire (3000 mm), surge suppressor, indicator lamp	●	●	●	●	●	●

*9 : Grommet lead wire specifications are compatible with DC voltage only.
*10: AC voltages and 12/24 VDC are supported. In addition, a lamp comes with the terminal box.
*11: AC voltage is with a rectifier circuit.
*12: The terminal box conforms to EN175301-803 Type C (former DIN 43650-C). Refer to pages 856 and 857 for details.

Electrical connections

Blank Grommet lead wire

● **Lead wire length**
300 mm

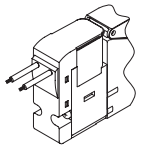

E1 E3 E-connector with socket/terminal

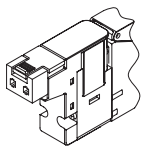

E0 E2 E-connector

● **Lead wire length**
300 mm
500 mm
1000 mm
2000 mm
3000 mm

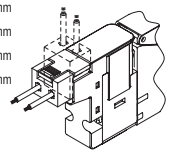

B DIN terminal box

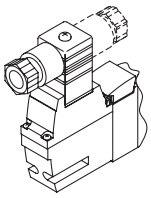

E0N E2N E-connector without socket

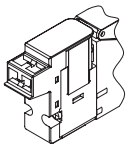

BN DIN terminal box Without terminal box

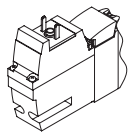

E0*J E2*J EJ-connector

● **Lead wire length**
1m
2m
3m

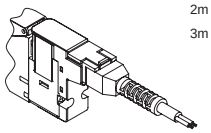

Internal structure and parts list

3GA110R

● 2-position single: Normally closed
Grommet lead wire (blank)

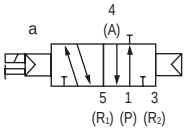

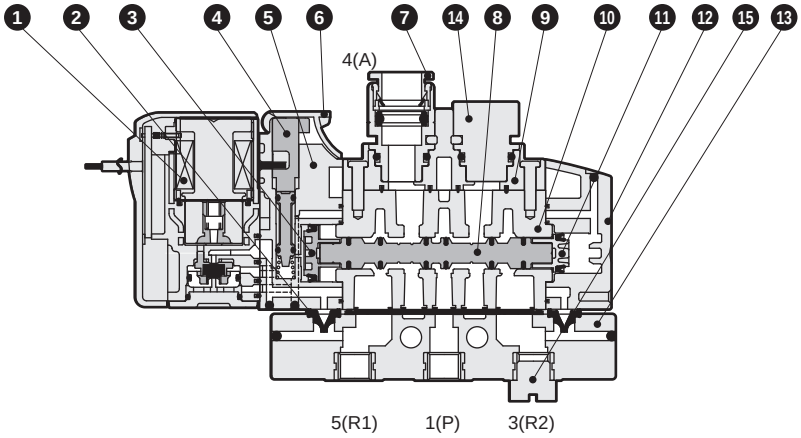

3GA1110R

● 2-position single: Normally open
Grommet lead wire (blank)

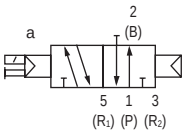

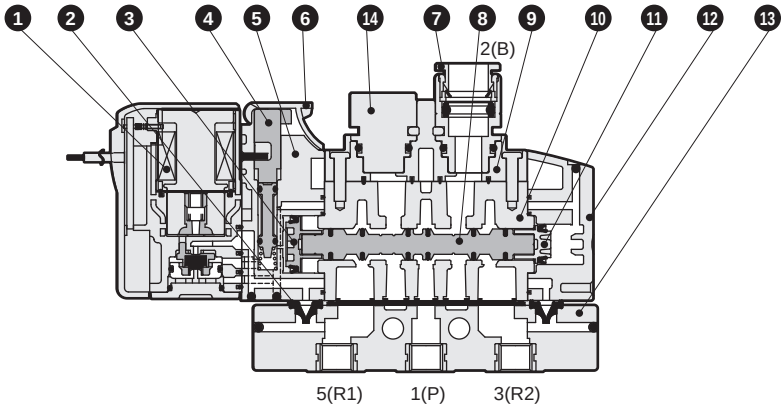

3GA1 $^{66}_{67}_{76}_{77}$ 0R

● Two 3-port valves integrated
Grommet lead wire (blank)

A side valve: Normally closed,
B side valve: Normally closed

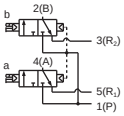

A side valve: Normally open,
B side valve: Normally closed

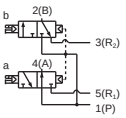

A side valve: Normally closed,
B side valve: Normally open

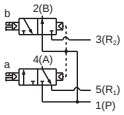

A side valve: Normally open,
B side valve: Normally open

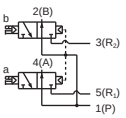

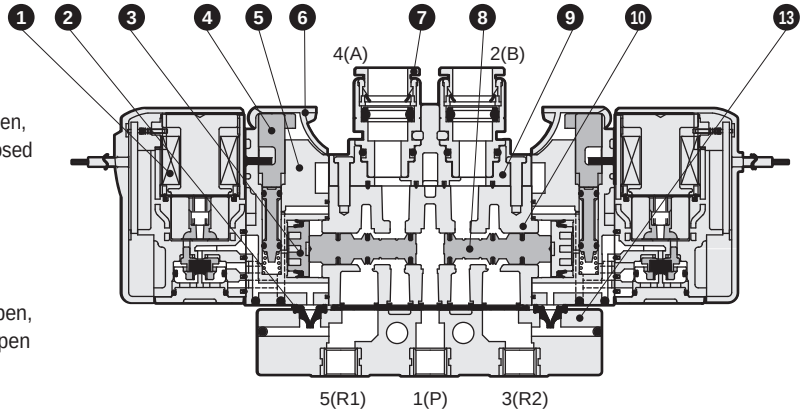

Main parts list

No.	Part name	Material
1	Coil assembly	-
2	Pilot exhaust check valve	Hydrogenated nitrile rubber
3	Piston D assembly	-
4	Manual override	Resin
5	Piston chamber	Resin
6	Manual protection cover	Resin
7	Cartridge push-in fitting or barbed fitting	-
8	Spool assembly	-
9	Fitting adaptor	Resin
10	Body	Aluminum alloy die-casting
11	Piston S assembly	-
12	Cap	Resin
13	Piping adapter	Resin
14	Plug cartridge	Aluminum
15	M5 plug	Copper alloy + nickel plating

Parts list

No.	Part name		Model No.
1	Coil assembly		4GR - electrical connections - □ - COIL - voltage Blank: Standard A: Ozone specifications S: Surgeless E: Low exoergic/ energy saving circuit K: External pilot Blank: Grommet lead wire
7	Cartridge push-in fitting and related parts	ø1.8 barbed	4G1R-JOINT-CF
		ø1.8 axial	4G1R-JOINT-C18
		ø4 straight	4G1R-JOINT-C4
		ø6 straight	4G1R-JOINT-C6
		Plug cartridge	4G1R-JOINT-CPG
		ø1/8" straight	4G1R-JOINT-C3N
		ø5/32" straight	4G1R-JOINT-C4N

Internal structure and parts list

4GA110R

● 2-position single
Grommet lead wire (blank)

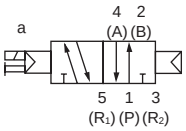

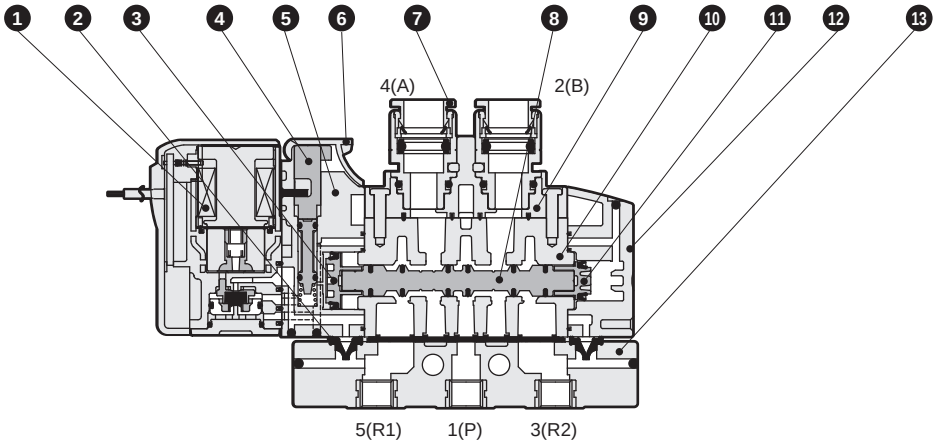

4GA120R

● 2-position double
Grommet lead wire (blank)

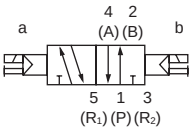

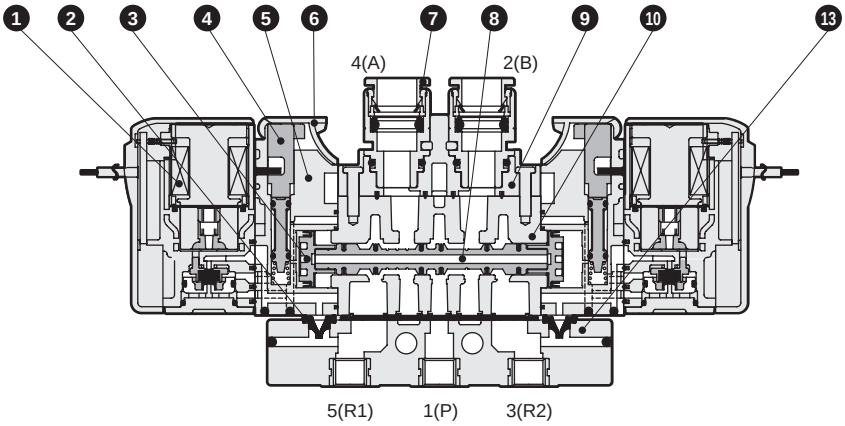

4GA1$^{3}_{4}_{5}$0R

● 3-position
Grommet lead wire (blank)

All ports closed

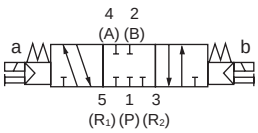

A/B/R connection

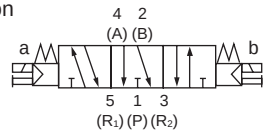

P/A/B connection

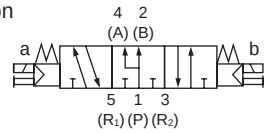

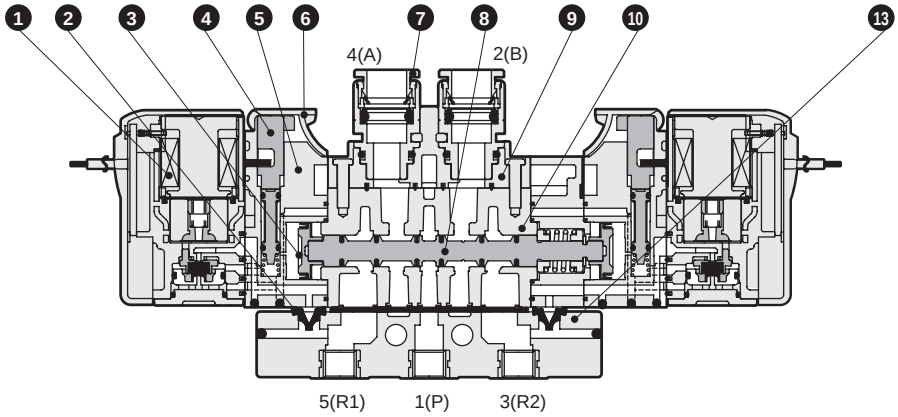

Main parts list

No.	Part name	Material
1	Coil assembly	-
2	Pilot exhaust check valve	Hydrogenated nitrile rubber
3	Piston D assembly	-
4	Manual override	Resin
5	Piston chamber	Resin
6	Manual protection cover	Resin
7	Cartridge push-in fitting or barbed fitting	-
8	Spool assembly	-
9	Fitting adapter	Resin
10	Body	Aluminum alloy die-casting
11	Piston S assembly	-
12	Cap	Resin
13	Piping adapter	Resin

Parts list

No.	Part name		Model No.
1	Coil assembly		4GR - electrical connections - □ - COIL - voltage Blank: Standard A: Ozone specifications S: Surgeless E: Low exergic/ energy saving circuit K: External pilot Blank: Grommet lead wire
7	Cartridge push-in fitting and related parts	ø1.8 barbed	4G1R-JOINT-CF
		ø1.8 axial	4G1R-JOINT-C18
		ø4 straight	4G1R-JOINT-C4
		ø6 straight	4G1R-JOINT-C6
		Plug cartridge	4G1R-JOINT-CPG
		ø1/8” straight	4G1R-JOINT-C3N
		ø5/32” straight	4G1R-JOINT-C4N

Internal structure and parts list

3GA210R/3GA310R

● 2-position single: Normally closed
Grommet lead wire (blank)

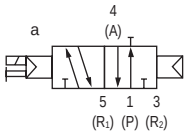

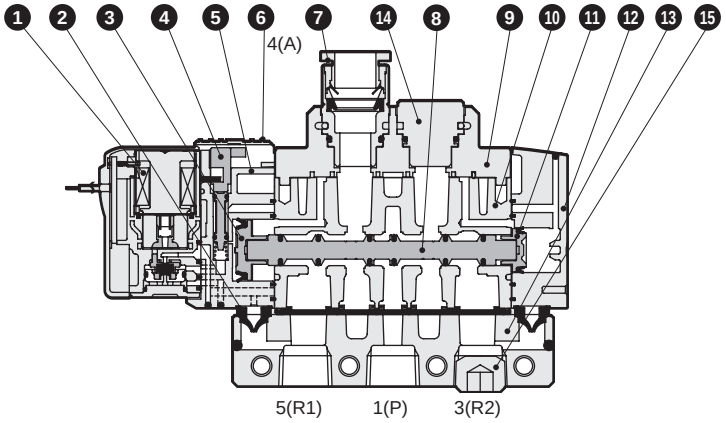

3GA2110R/3GA3110R

● 2-position single: Normally open
Grommet lead wire (blank)

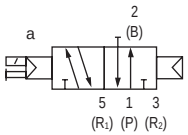

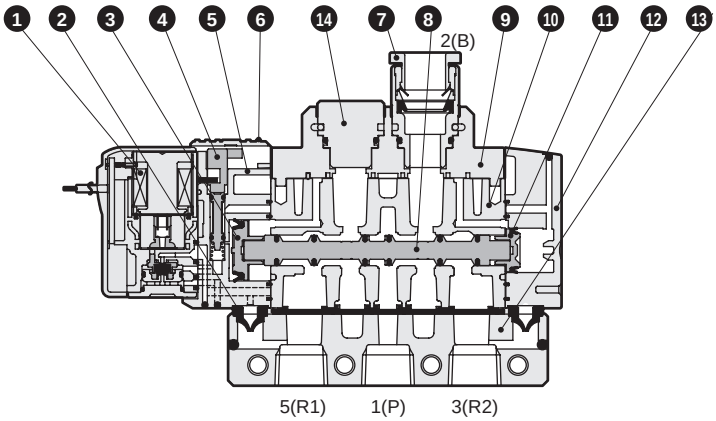

3GA2 66/67/76/77 0R

● Two 3-port valves integrated
Grommet lead wire (blank)

A side valve: Normally closed,
B side valve: Normally closed

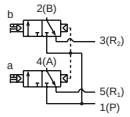

A side valve: Normally open,
B side valve: Normally closed

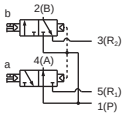

A side valve: Normally closed,
B side valve: Normally open

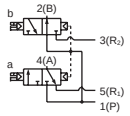

A side valve: Normally open,
B side valve: Normally open

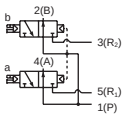

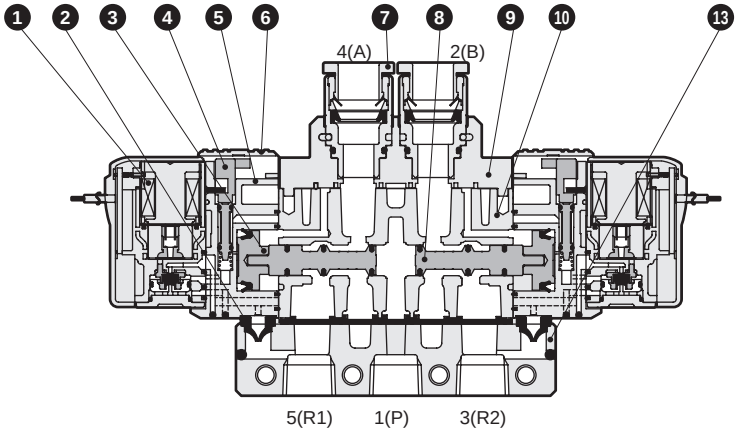

Main parts list

No.	Part name	Material
1	Coil assembly	-
2	Pilot exhaust check valve	Hydrogenated nitrile rubber
3	Piston D assembly	-
4	Manual override	Resin
5	Piston chamber	Resin
6	Manual protection cover	Resin
7	Cartridge push-in fitting	-
8	Spool assembly	-
9	Fitting adapter	Resin
10	Body	Aluminum alloy die-casting
11	Piston S assembly	-
12	Cap	Resin
13	Piping adapter	Aluminum alloy die-casting
14	Plug cartridge	Aluminum
15	Hexagon socket plug	Steel

Parts list

No.	Part name			Model No.
1	Coil assembly			4GR - electrical connections - □ - COIL - voltage Blank: Standard A: Ozone specifications S: Surgeless E: Low exoergic/ energy saving circuit K: External pilot Blank: Grommet lead wire
7	Cartridge push-in fitting and related parts	3G2	ø4 straight	4G2R-JOINT-C4
			ø6 straight	4G2R-JOINT-C6
			ø8 straight	4G2R-JOINT-C8
			Plug cartridge	4G2R-JOINT-CPG
			ø1/4" straight	4G2R-JOINT-C6N
			ø5/16" straight	4G2R-JOINT-C8N
		3G3	ø6 straight	4G3R-JOINT-C6
			ø8 straight	4G3R-JOINT-C8
			ø10 straight	4G3R-JOINT-C10
			Plug cartridge	4G3R-JOINT-CPG
			ø5/16" straight	4G3R-JOINT-C8N
			ø3/8" straight	4G3R-JOINT-C10N

Internal structure and parts list

4GA210R/4GA310R

● 2-position single
Grommet lead wire (blank)

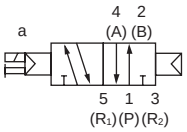

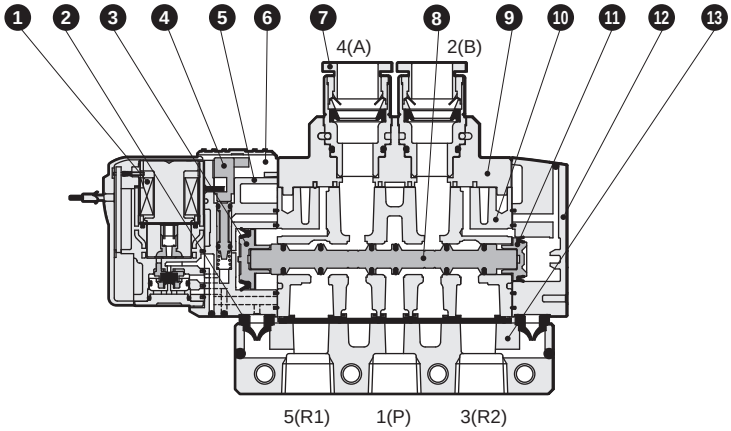

4GA220R/4GA320R

● 2-position double
Grommet lead wire (blank)

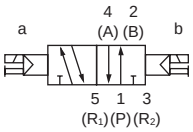

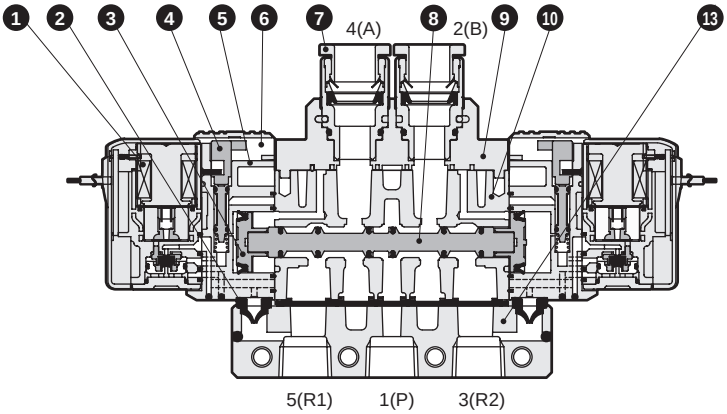

4GA2$^{3}_{4}_{5}$0R/4GA3$^{3}_{4}_{5}$0R

● 3-position
Grommet lead wire (blank)

All ports closed

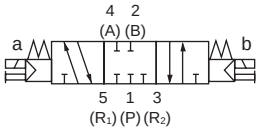

A/B/R connection

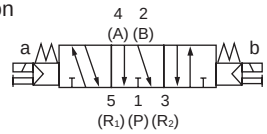

P/A/B connection

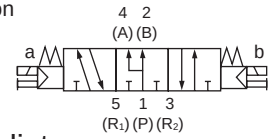

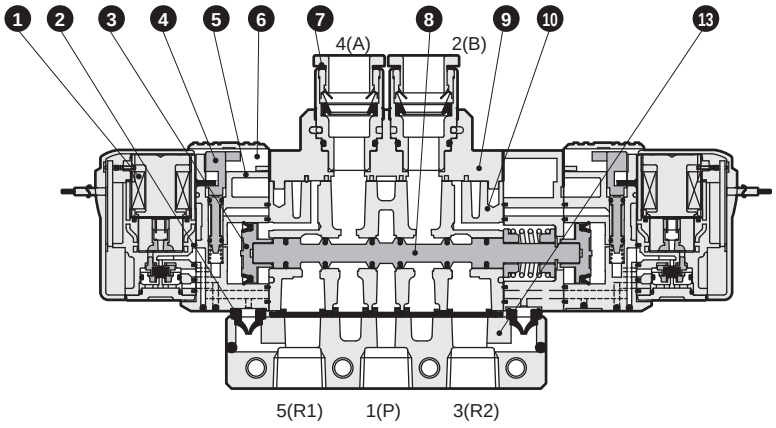

Main parts list

No.	Part name	Material
1	Coil assembly	-
2	Pilot exhaust check valve	Hydrogenated nitrile rubber
3	Piston D assembly	-
4	Manual override	Resin
5	Piston chamber	Resin
6	Manual protection cover	Resin
7	Cartridge push-in fitting	-
8	Spool assembly	-
9	Fitting adapter	Resin
10	Body	Aluminum alloy die-casting
11	Piston S assembly	-
12	Cap	Resin
13	Piping adapter	Aluminum alloy die-casting

Parts list

No.	Part name			Model No.
1	Coil assembly			4GR - electrical connections - □ - COIL - voltage Blank: Standard A: Ozone specifications S: Surgeless E: Low exoergic/energy saving circuit K: External pilot Blank: Grommet lead wire
7	Cartridge push-in fitting and related parts	4G2	ø4 straight	4G2R-JOINT-C4
			ø6 straight	4G2R-JOINT-C6
			ø8 straight	4G2R-JOINT-C8
			Plug cartridge	4G2R-JOINT-CPG
			ø1/4” straight	4G2R-JOINT-C6N
			ø5/16” straight	4G2R-JOINT-C8N
		4G3	ø6 straight	4G3R-JOINT-C6
			ø8 straight	4G3R-JOINT-C8
			ø10 straight	4G3R-JOINT-C10
			Plug cartridge	4G3R-JOINT-CPG
			ø5/16” straight	4G3R-JOINT-C8N
			ø3/8” straight	4G3R-JOINT-C10N

Internal structure and parts list (electrical connections section)

● E-connector E□□

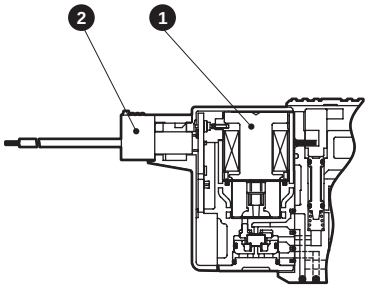

● EJ type connector E□□J

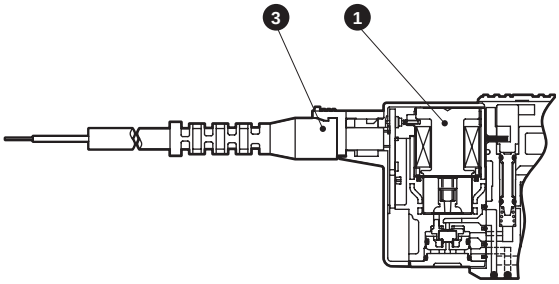

● DIN terminal box B

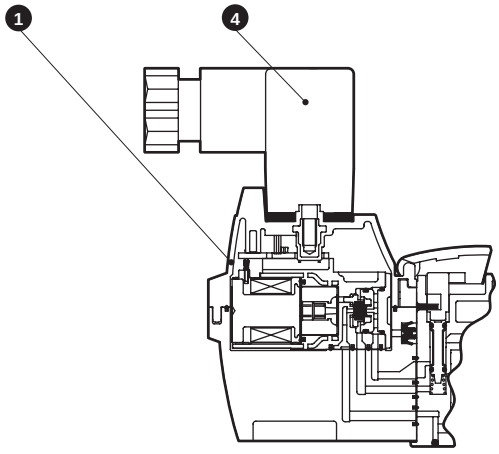

Main parts list

No.	Part name	Material
1	Coil assembly	
2	E-connector socket assembly	-
3	Socket assembly with cover	-
4	DIN terminal box assembly	-

Parts list

No.	Part name	Model No.
1	Coil assembly	4GR - electrical connections - □ - COIL - voltage Blank: Standard A: Ozone specifications S: Surgeless E: Low exergic/energy saving circuit K: External pilot E* : E-connector E*J : Socket with cover B* : DIN terminal box B includes the DIN terminal box BN does not include the DIN terminal box
2	E-connector socket assembly	4GR-SOCKET-ASSY-E**-Voltage
3	Socket assembly with cover	4GR-SOCKET-ASSY-E**J
4	DIN terminal box assembly	4GR-TERMINAL-BOX-Voltage

MEMO

Dimensions CAD

3GA110R * NPT thread and G thread specifications are listed on pages 52 to 59.

● 2-position single: Normally closed grommet lead wire (blank)

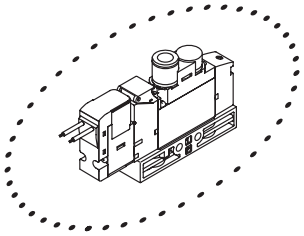

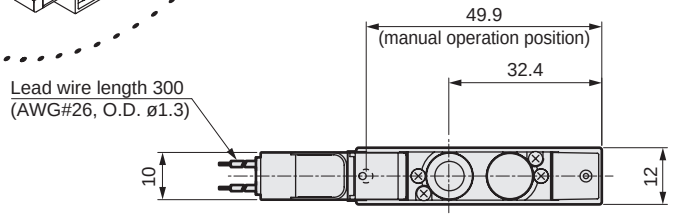

● Mounting plate (P)

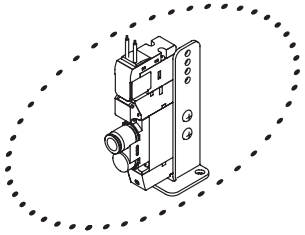

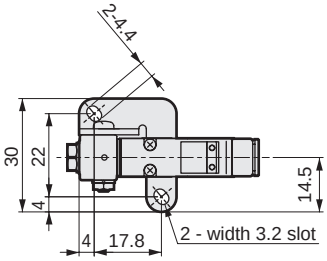

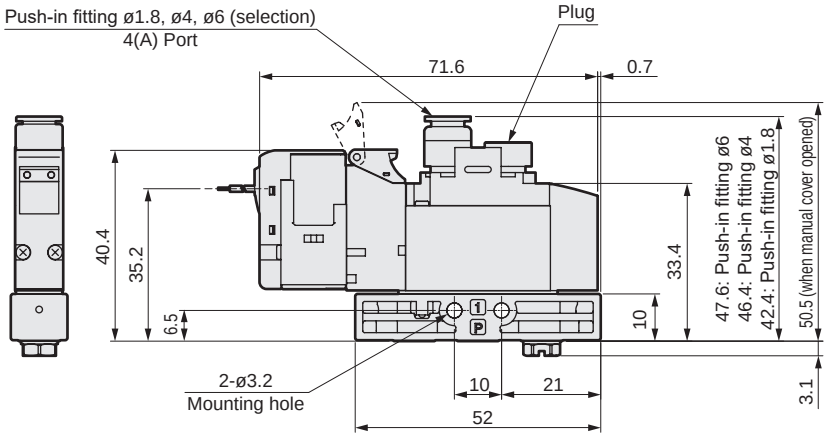

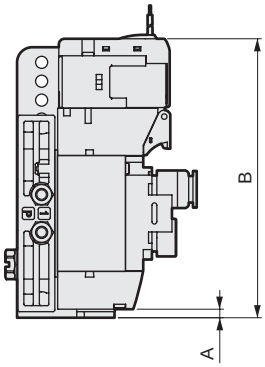

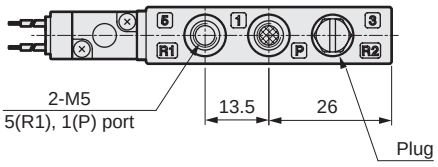

Electrical connections	A	B
Grommet lead wire	2.2	73.8
E, EJ type connector (upward direction), DC voltage		82
E, EJ type connector (upward direction), AC voltage		85.5

● M5 female thread (M5)

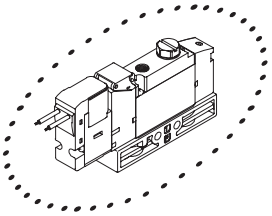

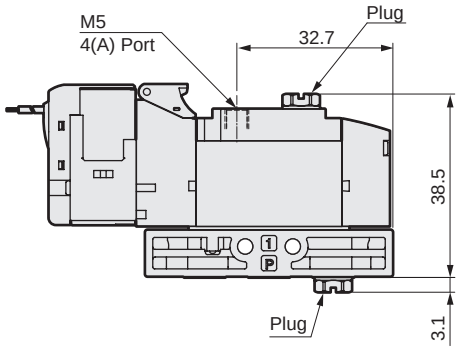

● ø1.8 barbed fitting (CF)

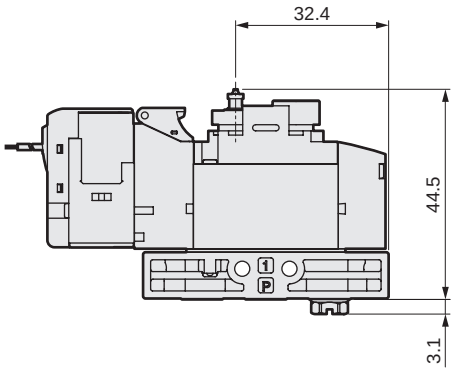

Dimensions

● E-connector (E)

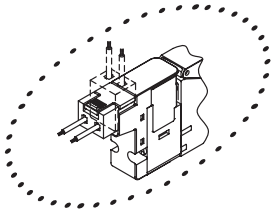

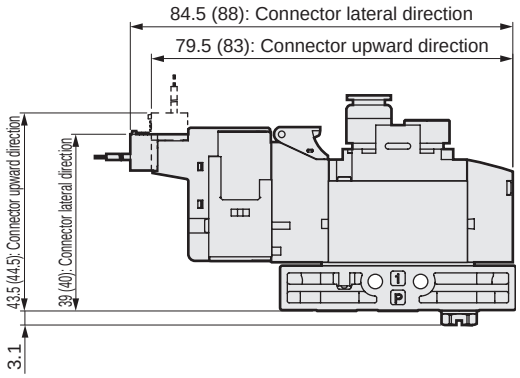

Note: Values in ( ) are for AC voltage.

● EJ type connector (E**J)

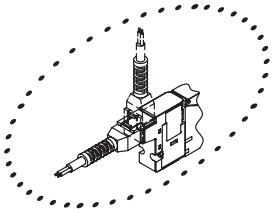

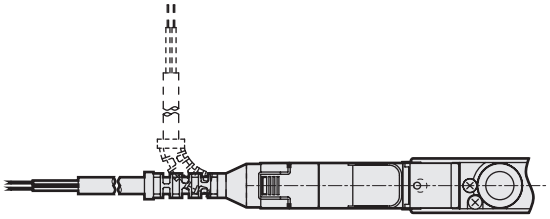

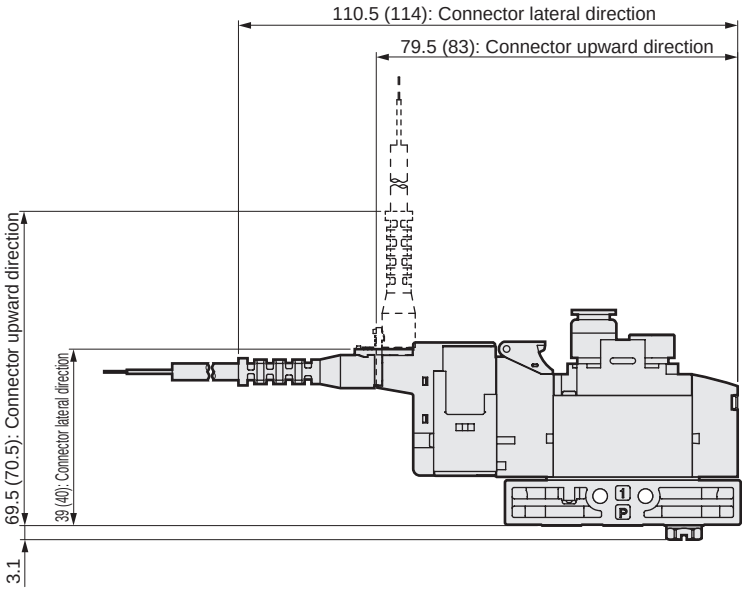

Note: Values in ( ) are for AC voltage.

Dimensions CAD

3GA1110R * NPT thread and G thread specifications are listed on pages 52 to 59.

● 2-position single normally open grommet lead wire (blank)

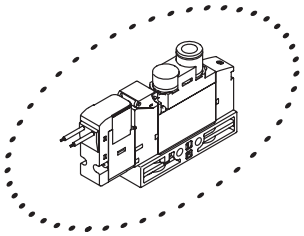

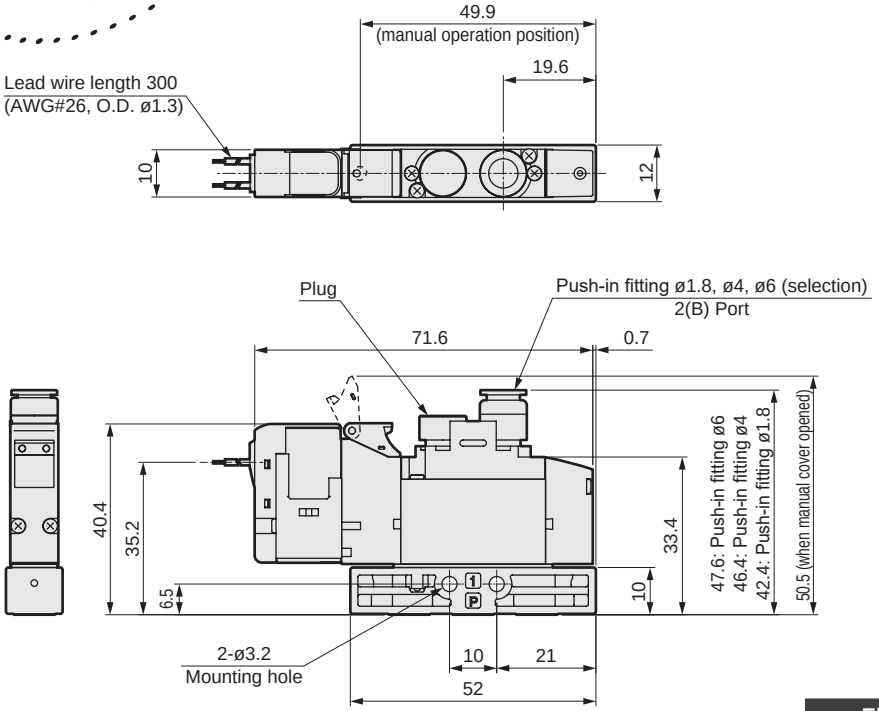

● Mounting plate (P)

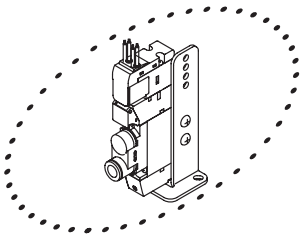

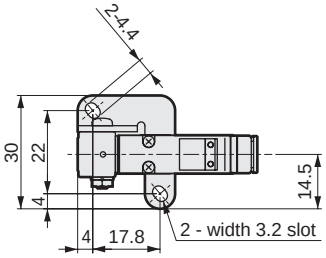

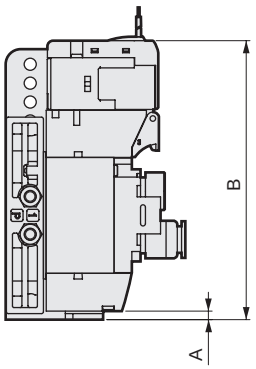

Electrical connections	A	B
Grommet lead wire	2.2	73.8
E, EJ type connector (upward direction), DC voltage		82
E, EJ type connector (upward direction), AC voltage		85.5

● M5 female thread (M5)

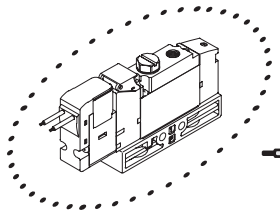

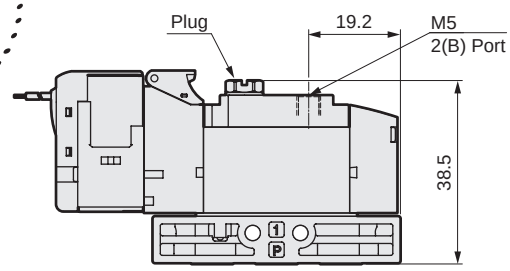

● ø1.8 barbed fitting (CF)

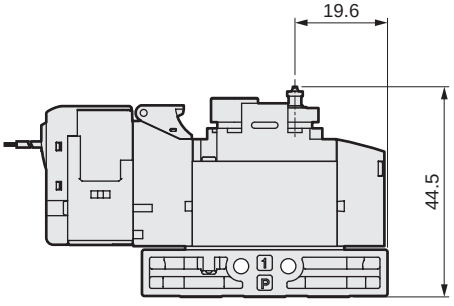

Dimensions

● E-connector (E)

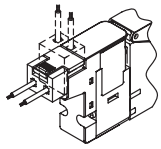

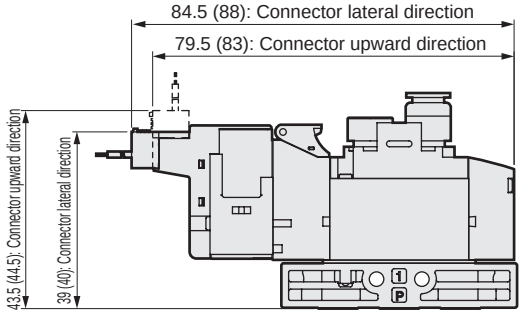

Note: Values in ( ) are for AC voltage.

● EJ type connector (E**J)

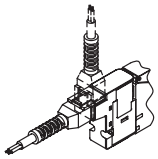

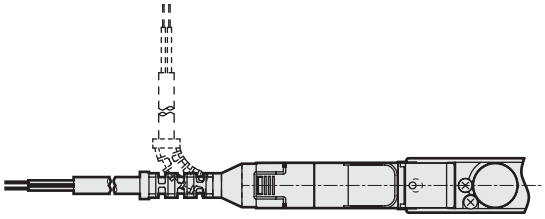

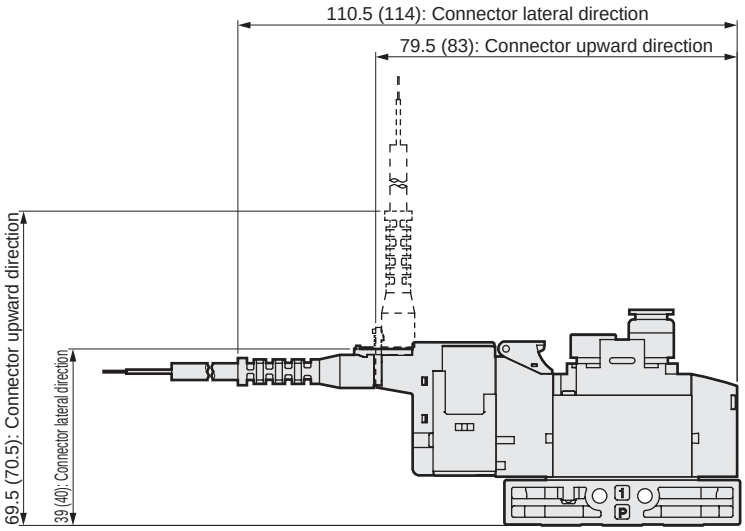

Note: Values in ( ) are for AC voltage.

Dimensions CAD

3GA210R * NPT thread and G thread specifications are listed on pages 52 to 59.

● 2-position single: Normally closed grommet lead wire (blank)

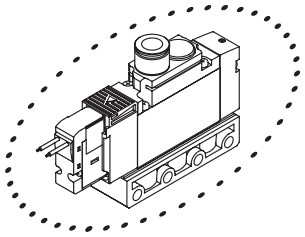

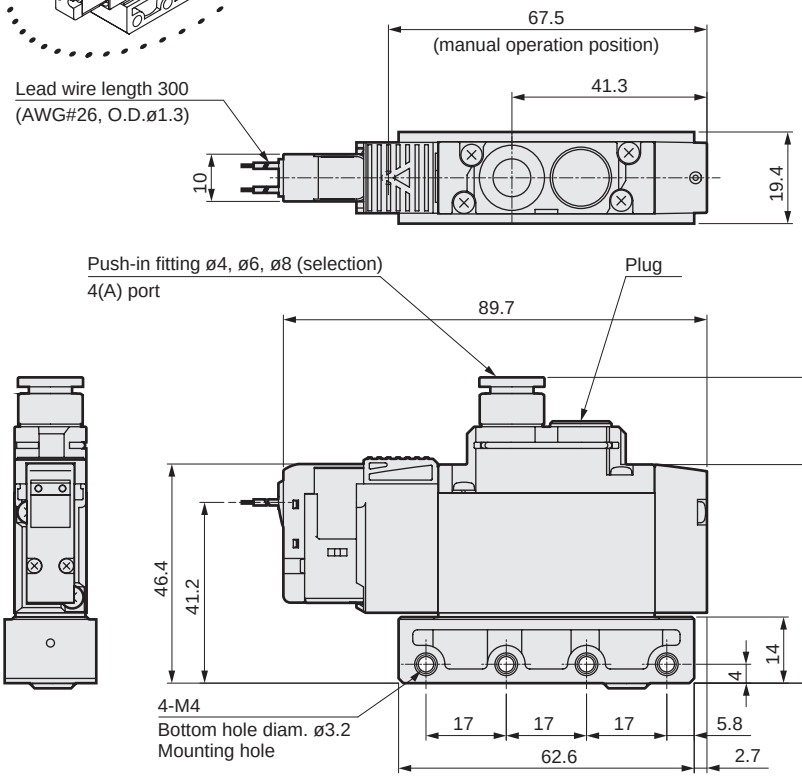

*Refer to page 853 for mounting hole details.

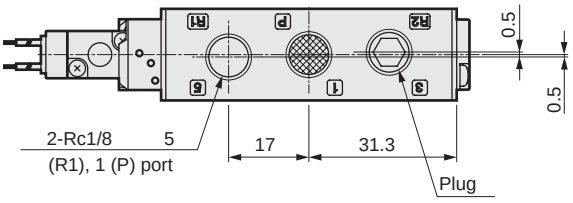

● Mounting plate (P)

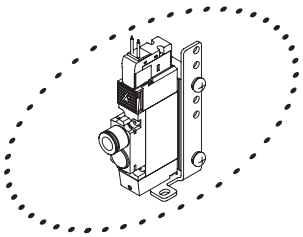

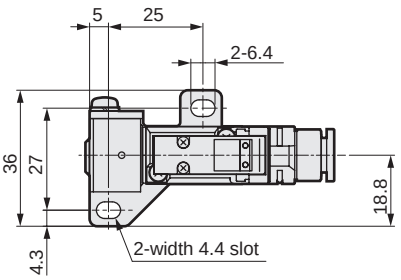

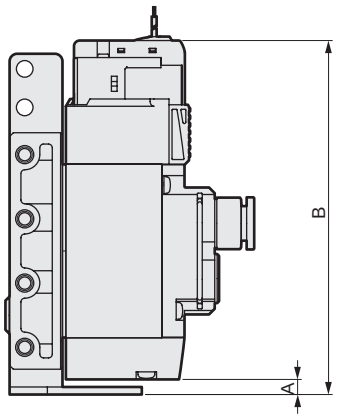

Electrical connections	A	B
Grommet lead wire	4	93.7
E, EJ type connector (upward direction), DC voltage		102
E, EJ type connector (upward direction), AC voltage		105.5
DIN terminal box (inner direction)		112.7

● Rc1/8 female thread (06)

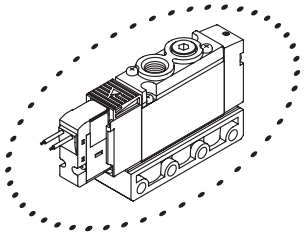

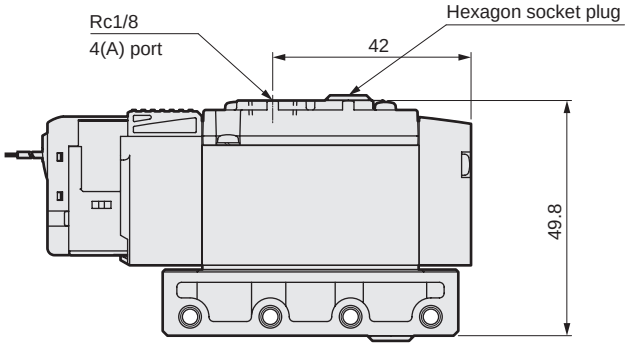

Dimensions

● E-connector (E)

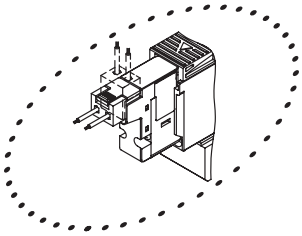

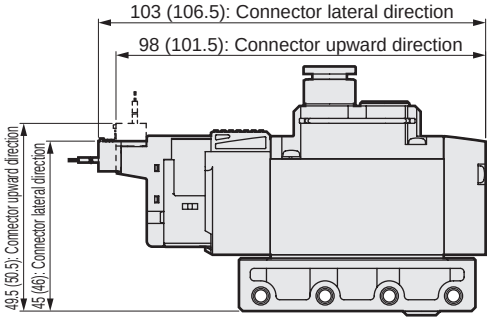

Note: Values in ( ) are for AC voltage.

● EJ type connector (E**J)

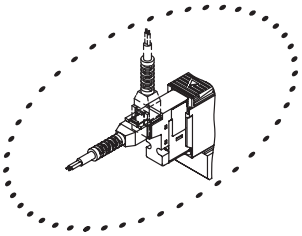

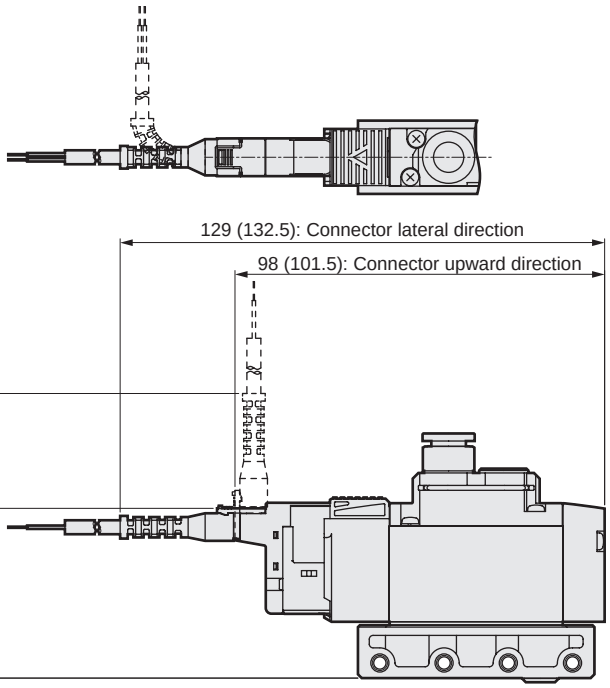

Note: Values in ( ) are for AC voltage.

● DIN terminal box (B)

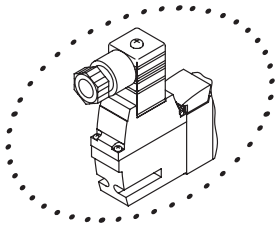

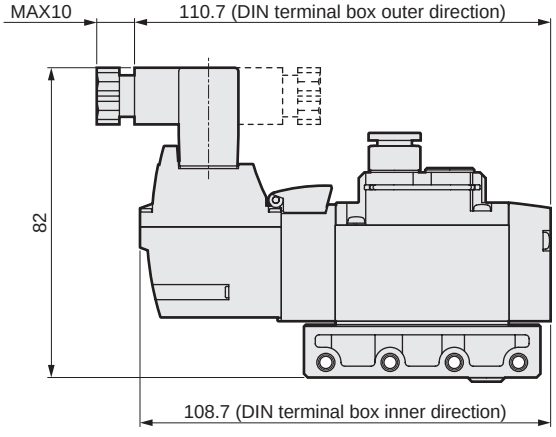

Note: DIN terminal box assembly is shipped facing inward.

Dimensions CAD

3GA2110R * NPT thread and G thread specifications are listed on pages 52 to 59.

● 2-position single: Normally open grommet lead wire (blank)

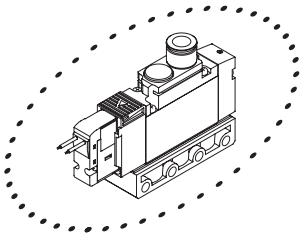

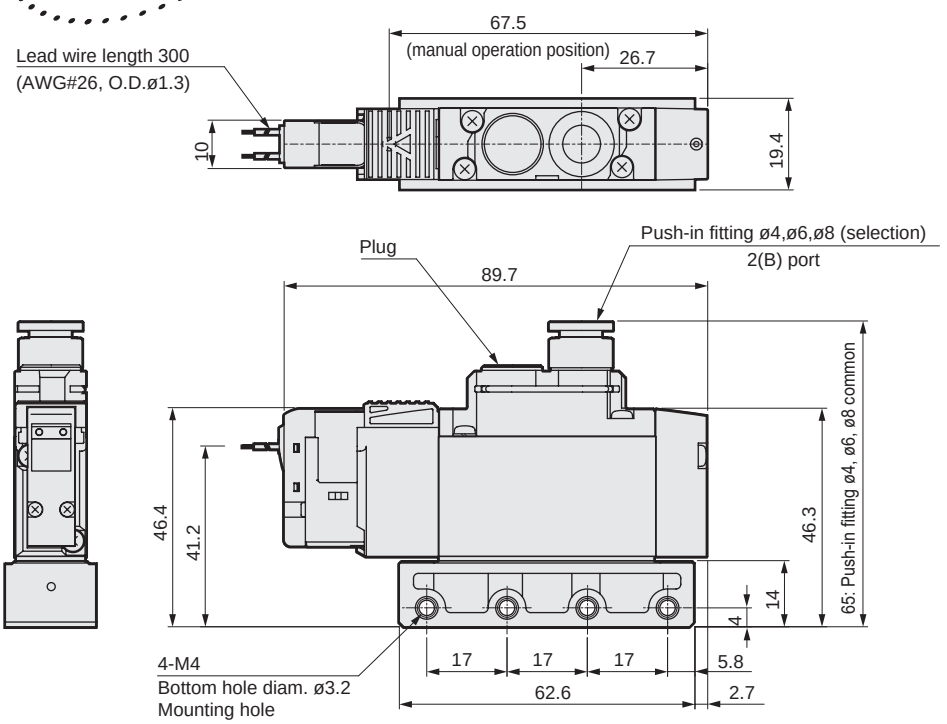

*Refer to page 853 for mounting hole details.

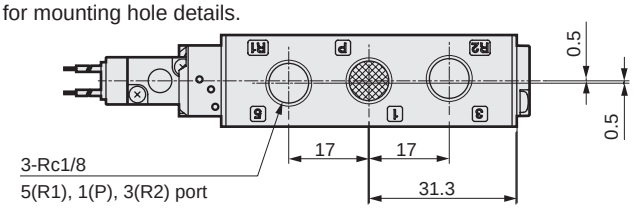

● Mounting plate (P)

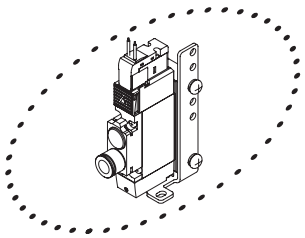

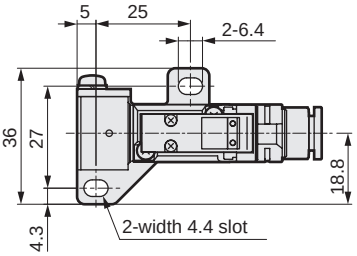

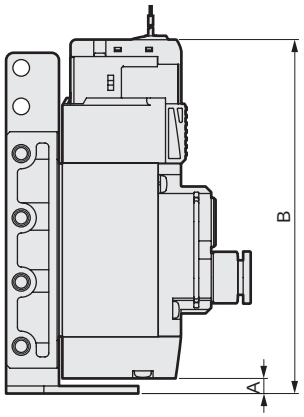

Electrical connections	A	B
Grommet lead wire	4	93.7
E, EJ type connector (upward direction), DC voltage		102
E, EJ type connector (upward direction), AC voltage		105.5
DIN terminal box (inner direction)		112.7

● Rc1/8 female thread (06)

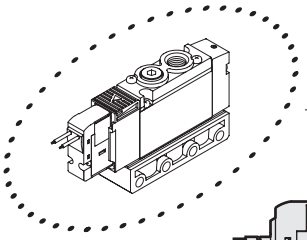

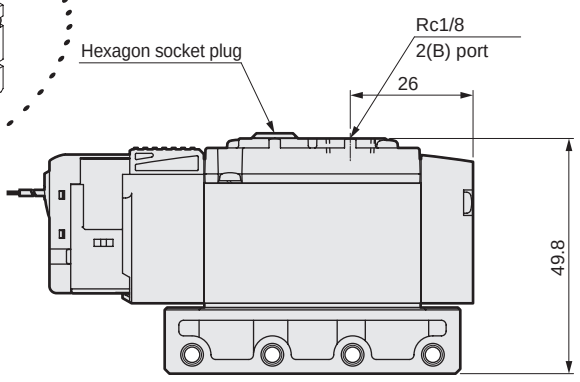

Dimensions

● E-connector (E)

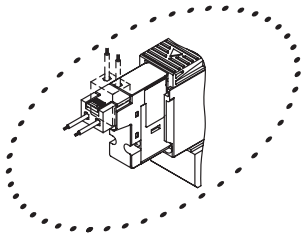

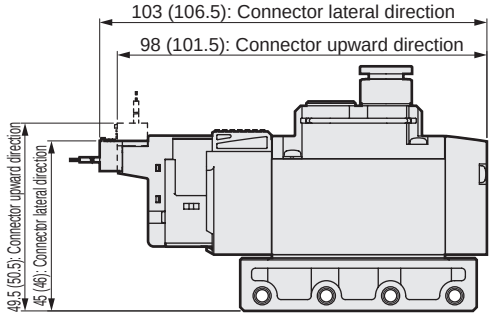

Note: Values in ( ) are for AC voltage.

● EJ type connector (E**J)

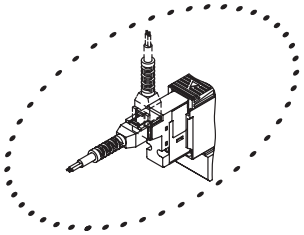

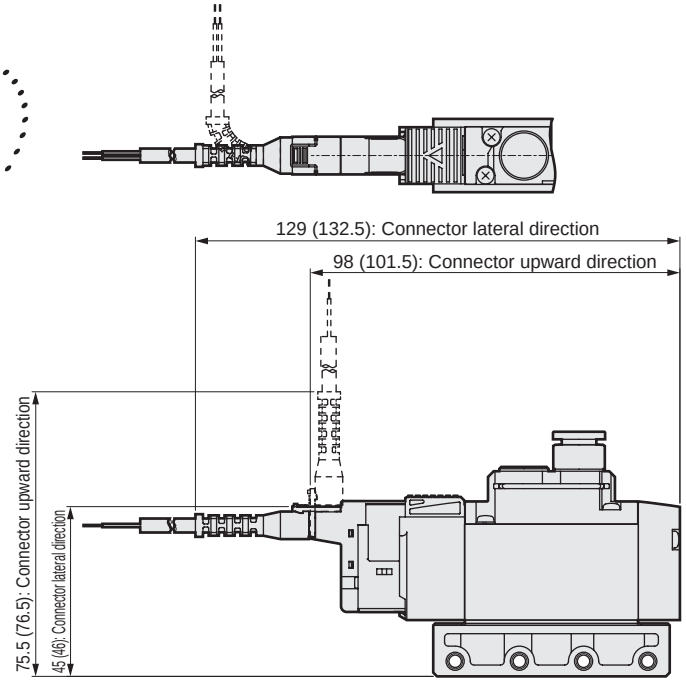

Note: Values in ( ) are for AC voltage.

● DIN terminal box (B)

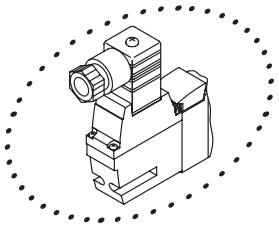

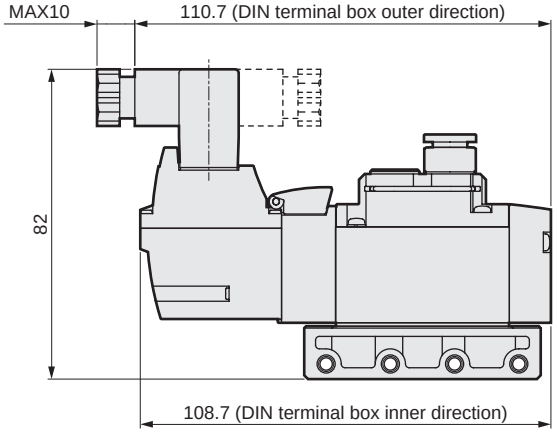

Note: DIN terminal box assembly is shipped facing inward.

Dimensions CAD

3GA310R * NPT thread and G thread specifications are listed on pages 52 to 59.

● 2-position single: Normally closed grommet lead wire (blank)

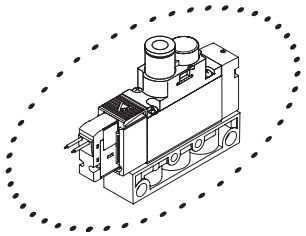

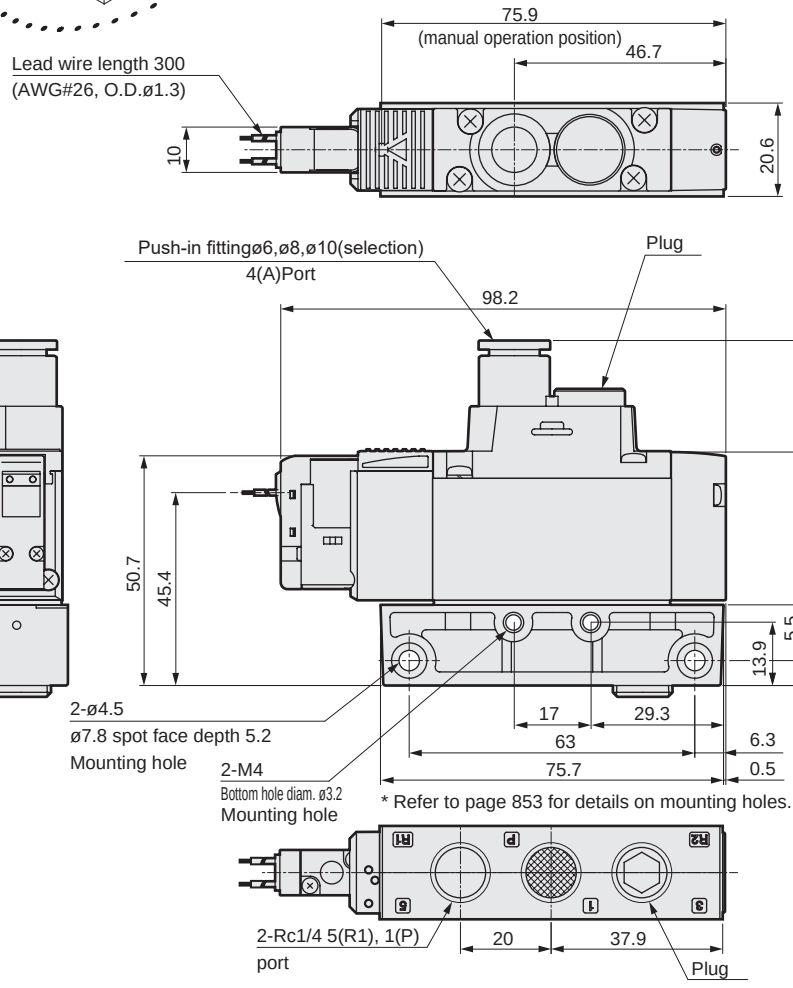

● Mounting plate (P)

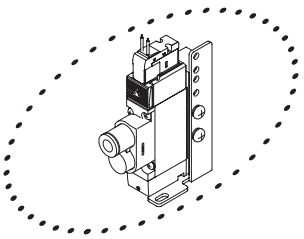

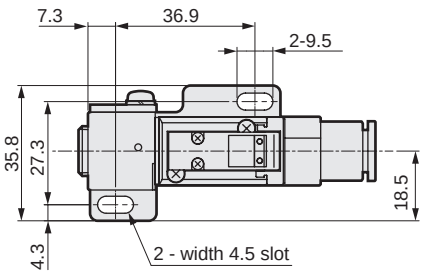

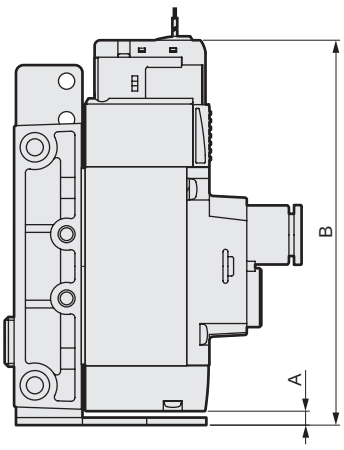

Electrical connections	A	B
Grommet lead wire	3.7	101.8
E, EJ type connector (upward direction), DC voltage		110
E, EJ type connector (upward direction), AC voltage		113.5
DIN terminal box (inner direction)		120.9

● Rc1/4 female thread (08)

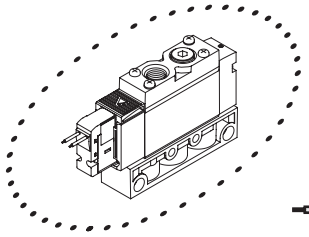

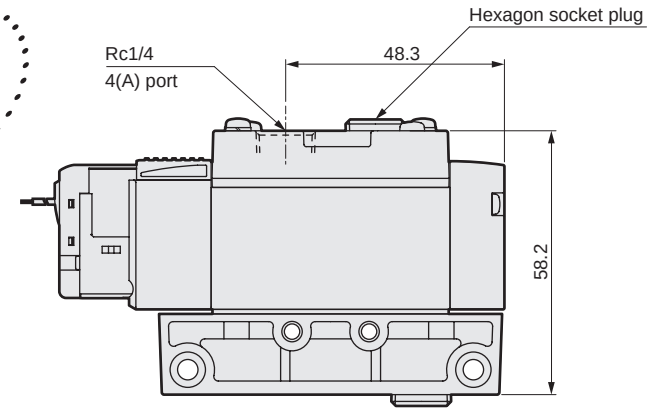

Dimensions

● E-connector (E)

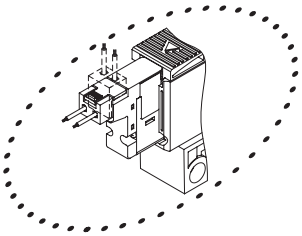

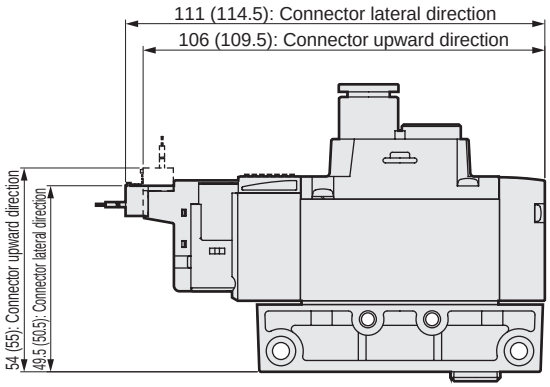

Note: Values in ( ) are for AC voltage.

● EJ type connector (E**J)

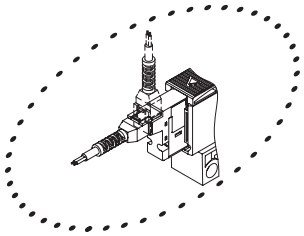

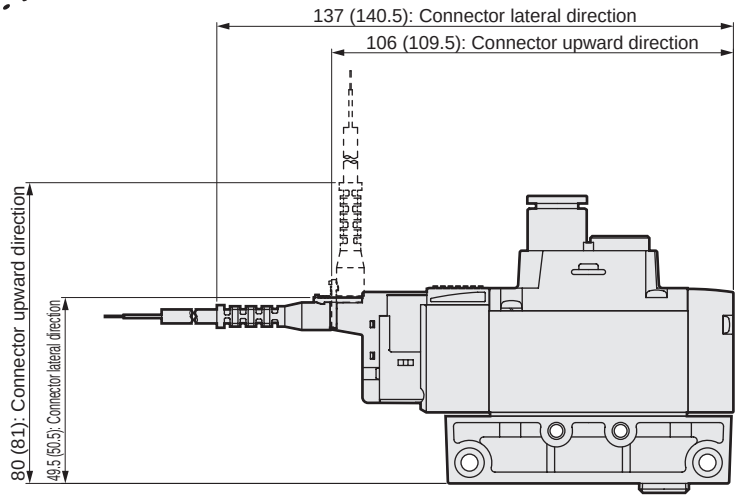

Note: Values in ( ) are for AC voltage.

● DIN terminal box (B)

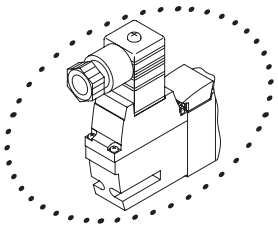

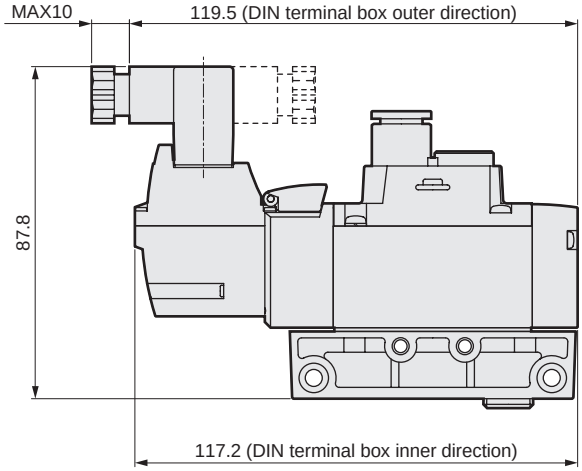

Note: DIN terminal box assembly is shipped facing inward.

Dimensions CAD

3GA3110R * NPT thread and G thread specifications are listed on pages 52 to 59.

● 2-position single: Normally open grommet lead wire (blank)

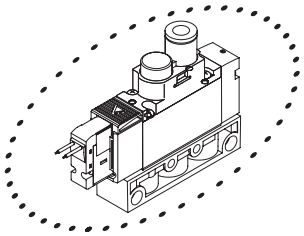

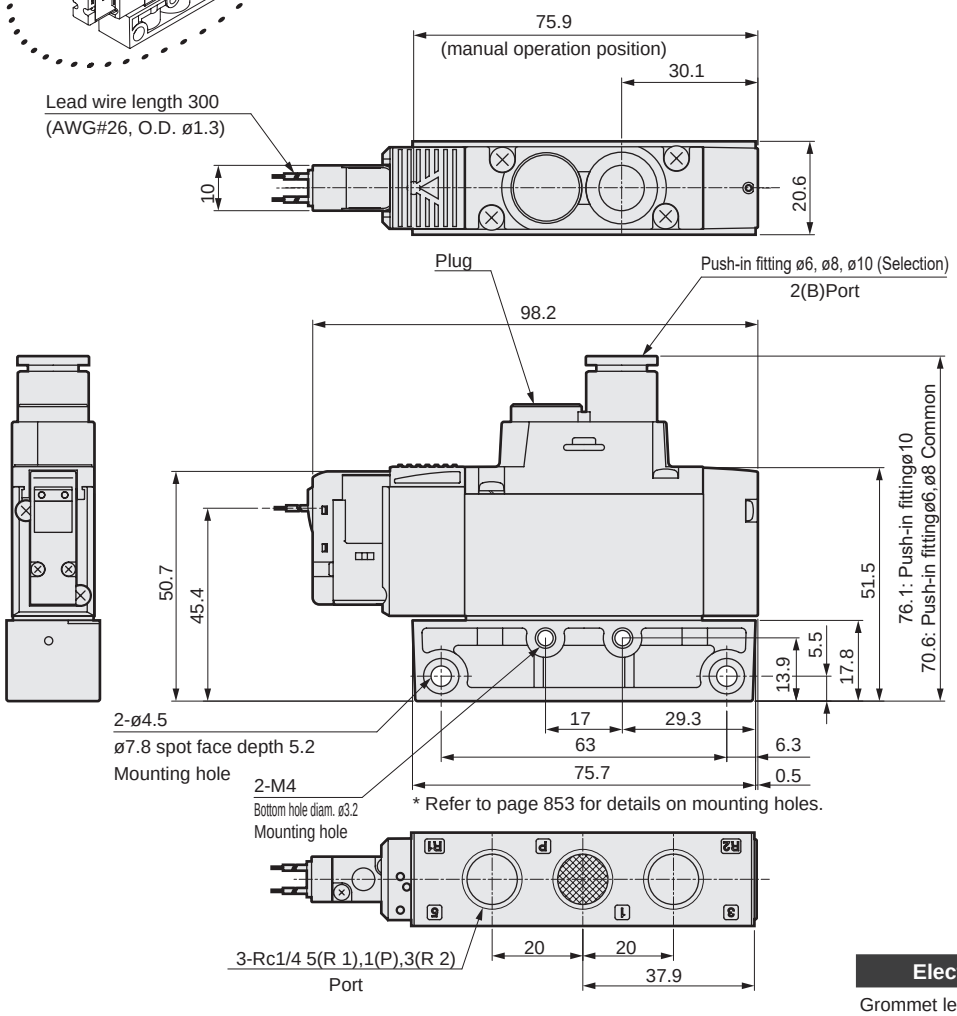

● Mounting plate (P)

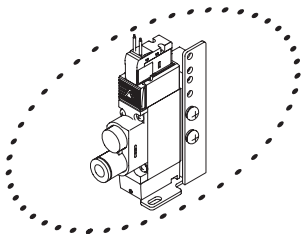

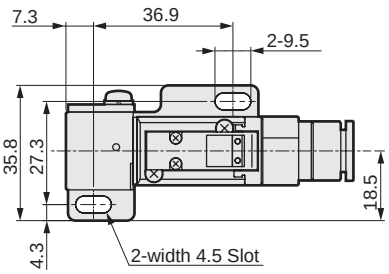

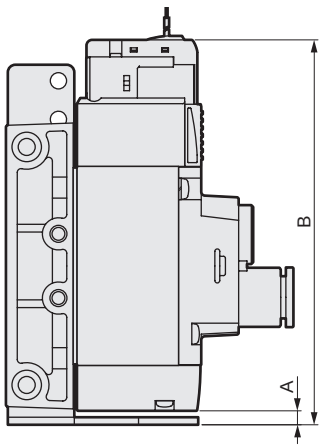

Electrical connections	A	B
Grommet lead wire	3.7	101.8
E, EJ type connector (upward direction), DC voltage		110
E, EJ type connector (upward direction), AC voltage		113.5
DIN terminal box (inner direction)		120.9

● Rc1/4 female thread (08)

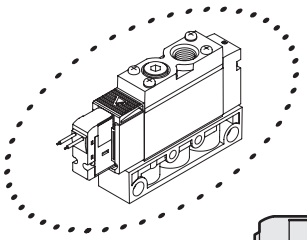

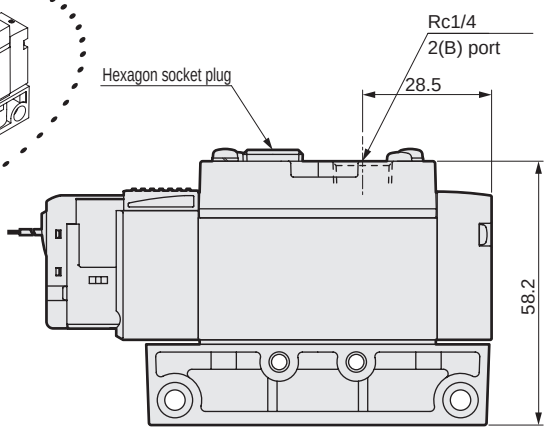

Dimensions

● E-connector (E)

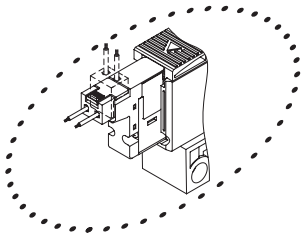

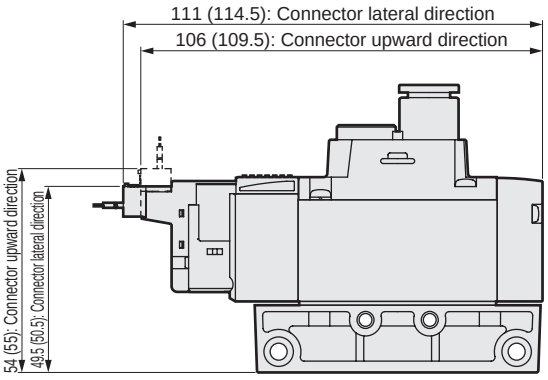

Note: Values in ( ) are for AC voltage.

● EJ type connector (E**J)

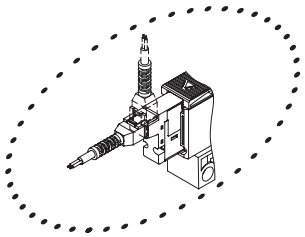

Note: Values in ( ) are for AC voltage.

● DIN terminal box (B)

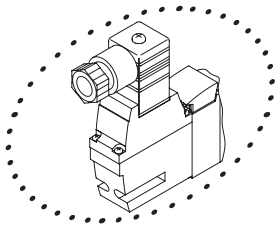

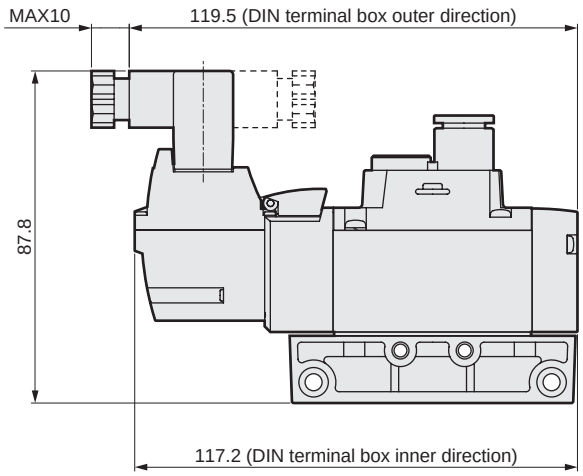

Note: DIN terminal box assembly is shipped facing inward.

Dimension diagram CAD

4GA110R * NPT thread and G thread specifications are listed on pages 52 to 59.

● 2-position single grommet lead wire (blank)

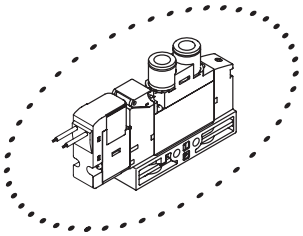

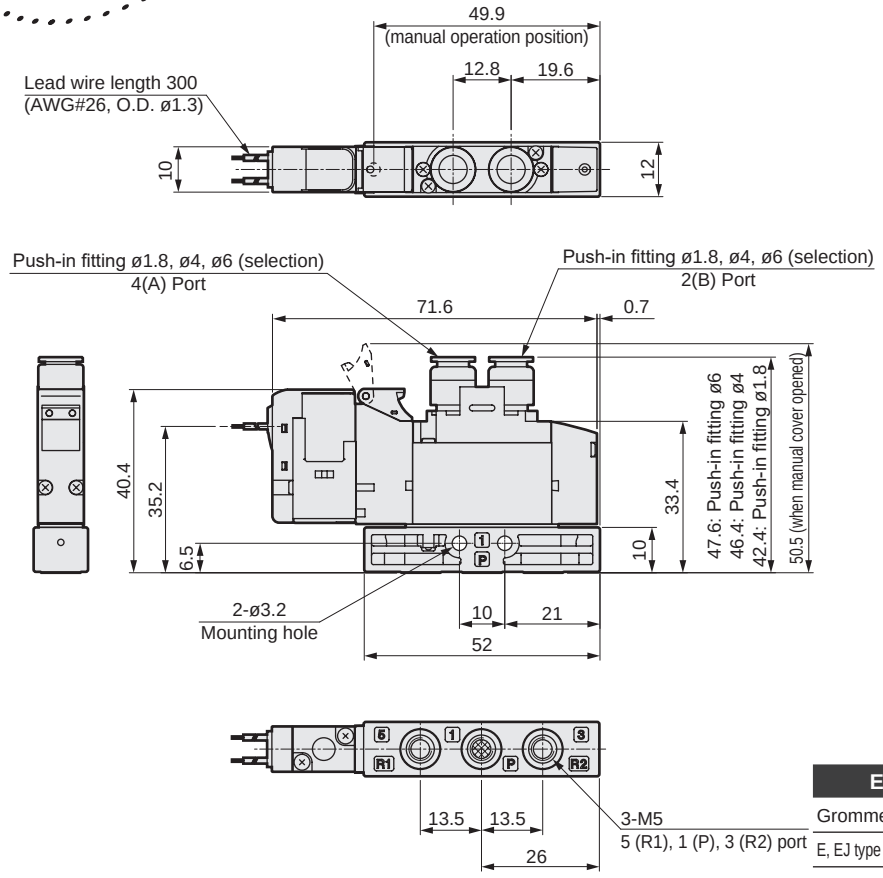

● Mounting plate (P)

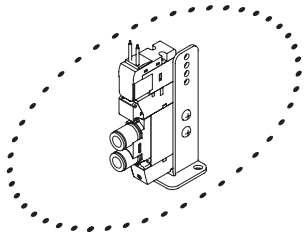

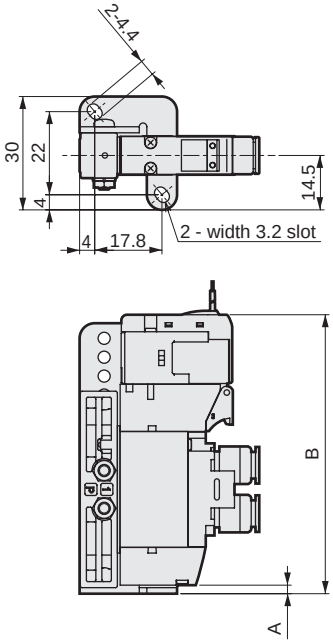

Electrical connections	A	B
Grommet lead wire	2.2	73.8
E, EJ type connector (upward direction), DC voltage		82
E, EJ type connector (upward direction), AC voltage		85.5

● M5 female thread (M5)

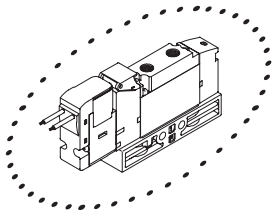

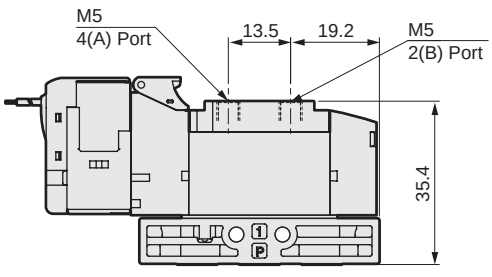

● ø1.8 barbed fitting (CF)

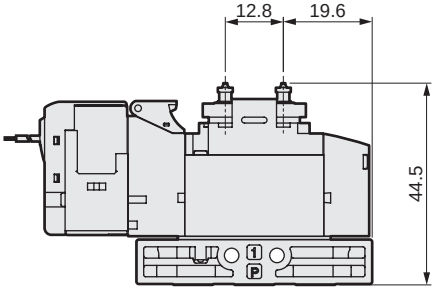

Dimensions

● E-connector (E)

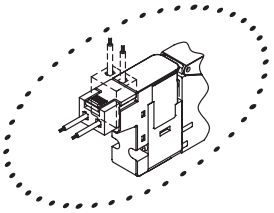

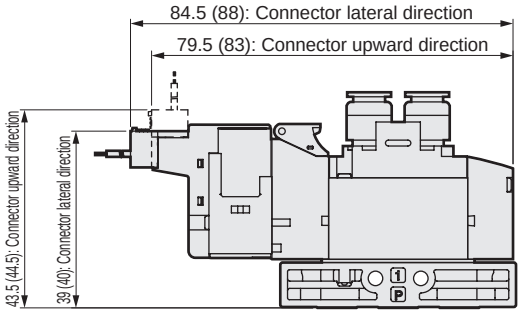

Note: Values in ( ) are for AC voltage.

● EJ type connector (E**J)

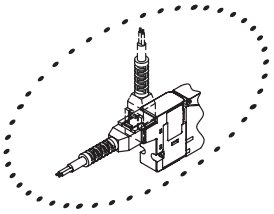

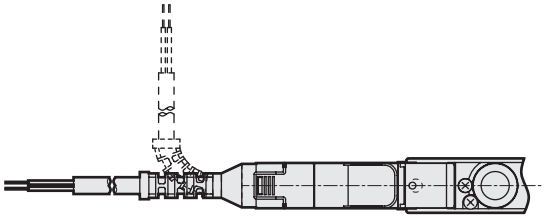

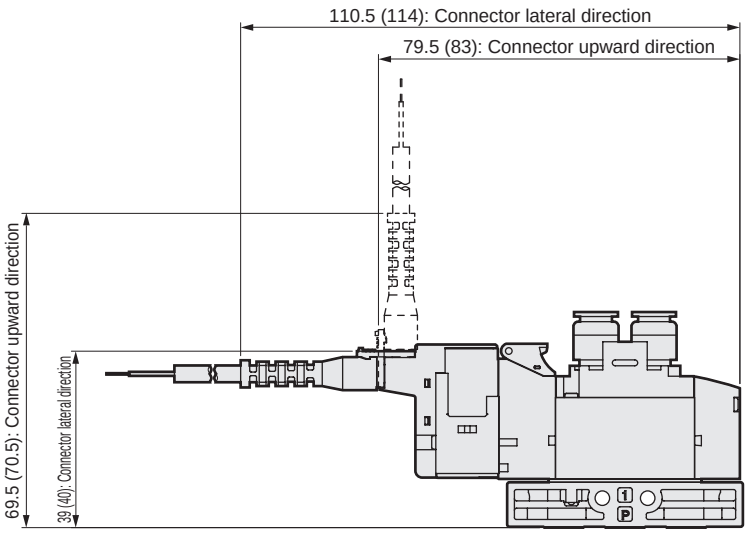

Note: Values in ( ) are for AC voltage.

Dimensions CAD

4GA120R * NPT thread and G thread specifications are listed on pages 52 to 59.

● 2-position double grommet lead wire (blank)

3GA1660R, 3GA1670R, 3GA1760R, 3GA1770R

● Two 3-port valves integrated grommet lead wire (blank)

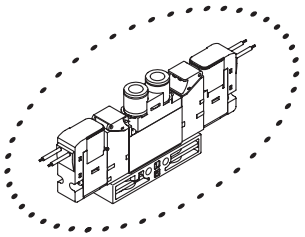

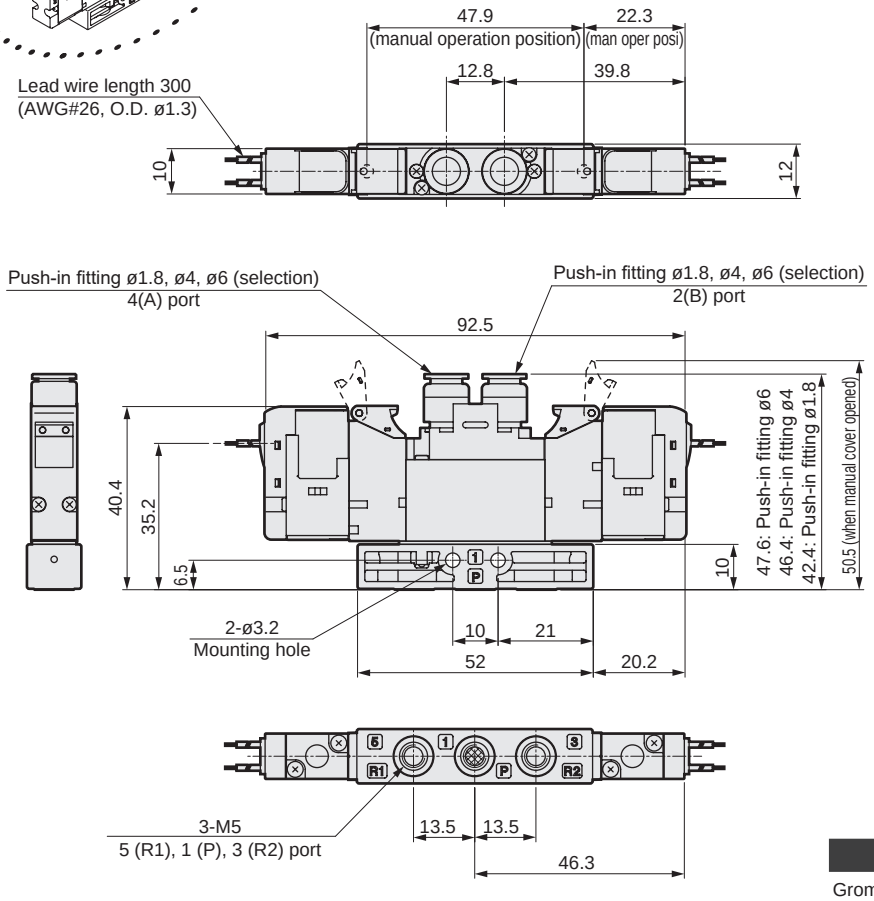

● Mounting plate (P)

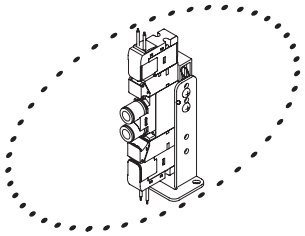

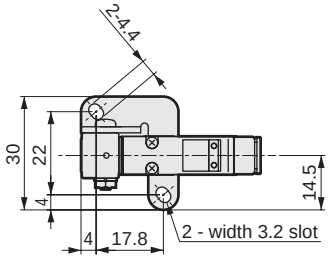

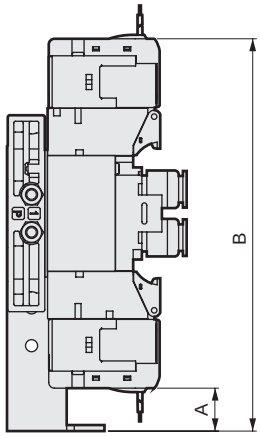

Electrical connections	A	B
Grommet lead wire	11.3	103.8
E, EJ type connector (upward direction), DC voltage	3	112
E, EJ type connector (upward direction), AC voltage	5	124

● M5 female thread (M5)

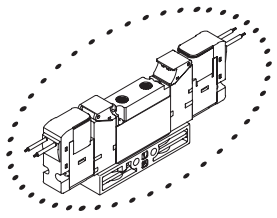

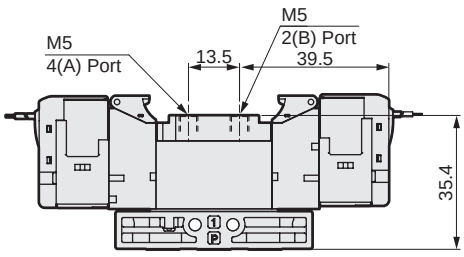

● ø1.8 barbed fitting (CF)

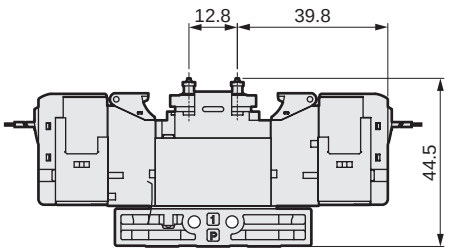

Dimensions

● E-connector (E)

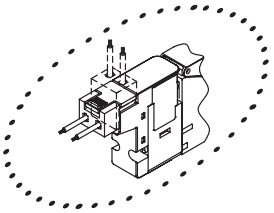

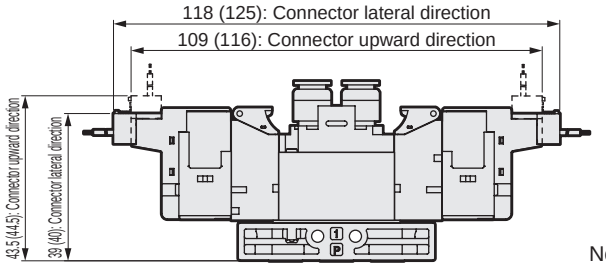

Note: Values in ( ) are for AC voltage.

● EJ type connector (E**J)

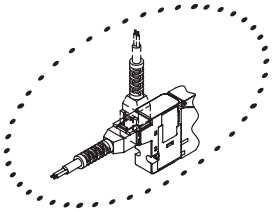

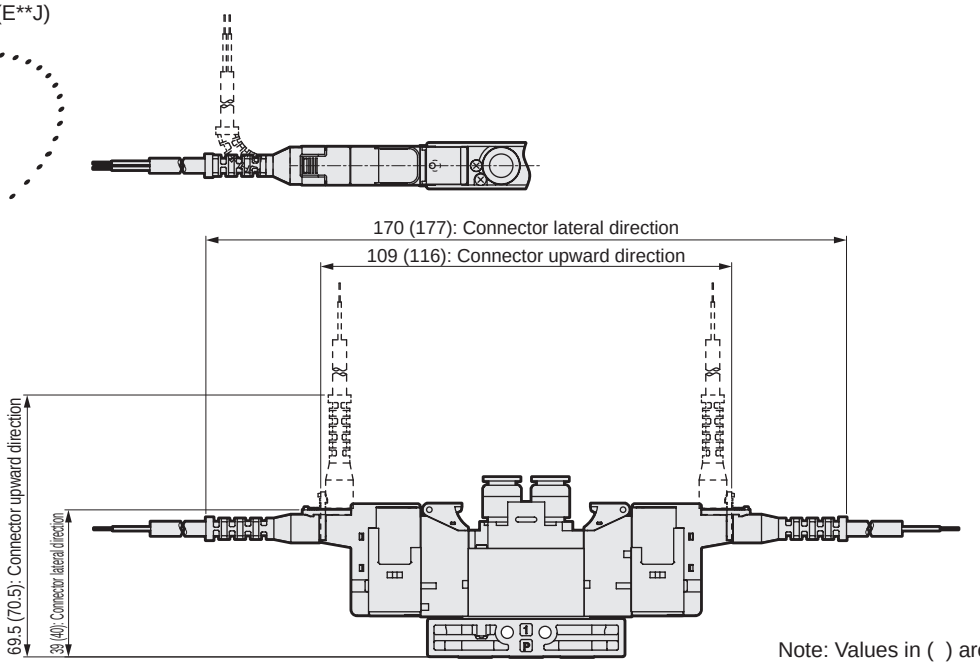

Note: Values in ( ) are for AC voltage.

Dimensions CAD

4GA1 $^{3}_{4}{}_{5}$ 0R * NPT thread and G thread specifications are listed on pages 52 to 59.

● 3-position grommet lead wire (blank)

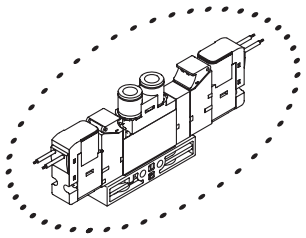

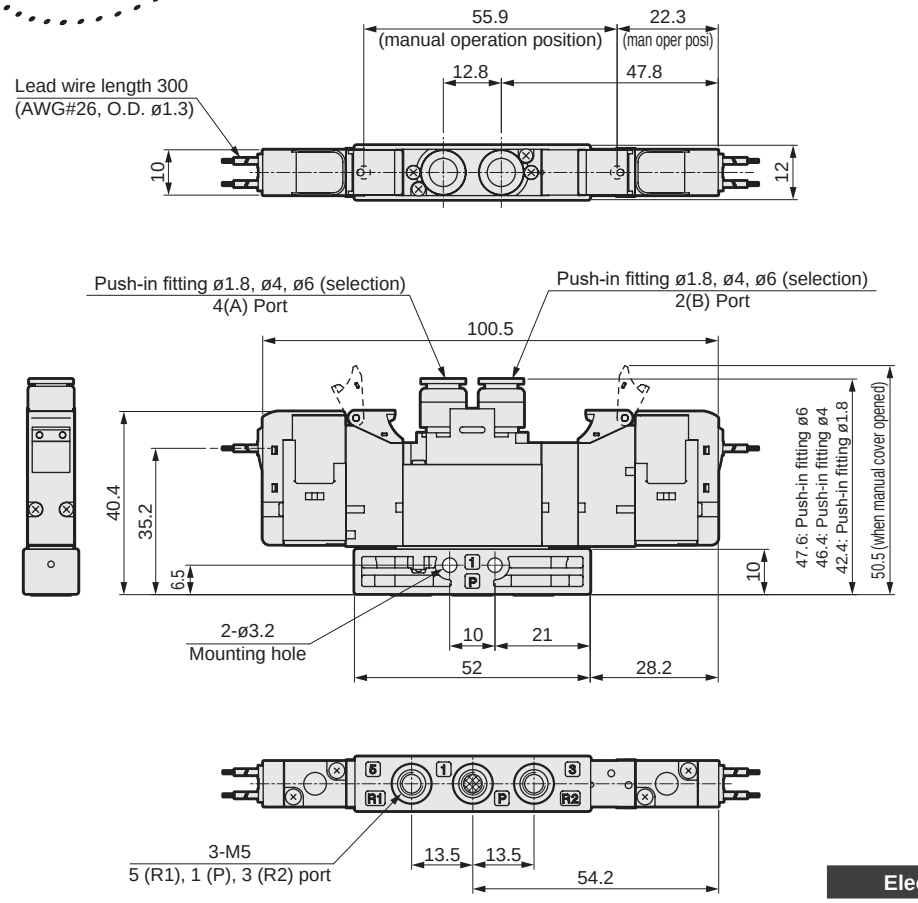

● Mounting plate (P)

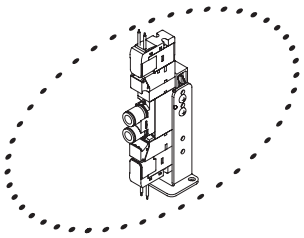

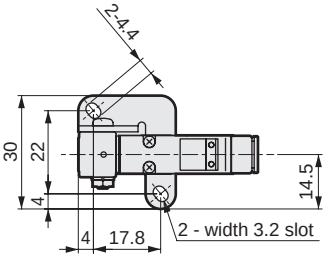

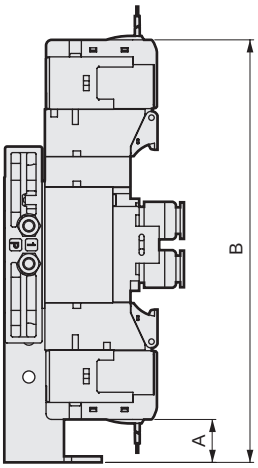

Electrical connections	A	B
Grommet lead wire	11.3	111.8
E, EJ type connector (upward direction), DC voltage	3	120
E, EJ type connector (upward direction), AC voltage	5	132

● M5 female thread (M5)

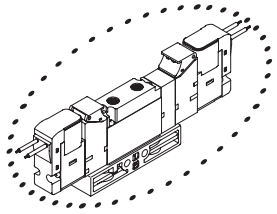

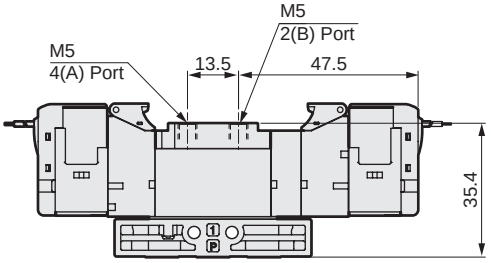

● ø1.8 barbed fitting (CF)

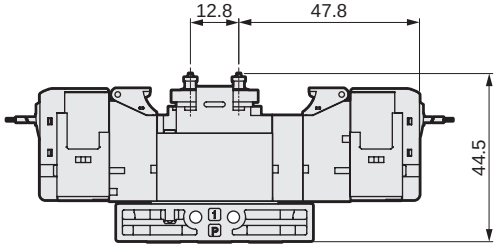

Dimensions

● E-connector (E)

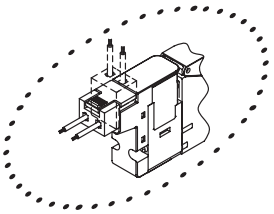

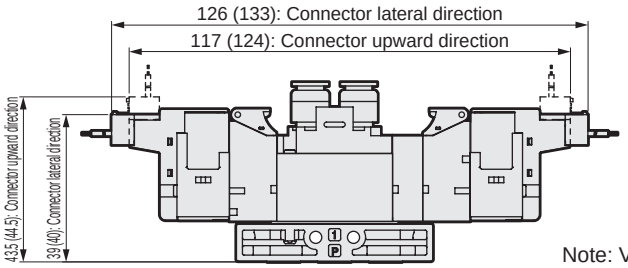

Note: Values in ( ) are for AC voltage.

● EJ type connector (E**J)

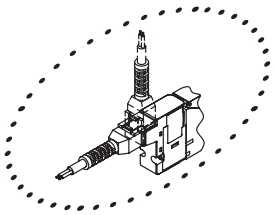

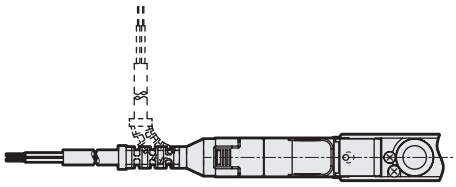

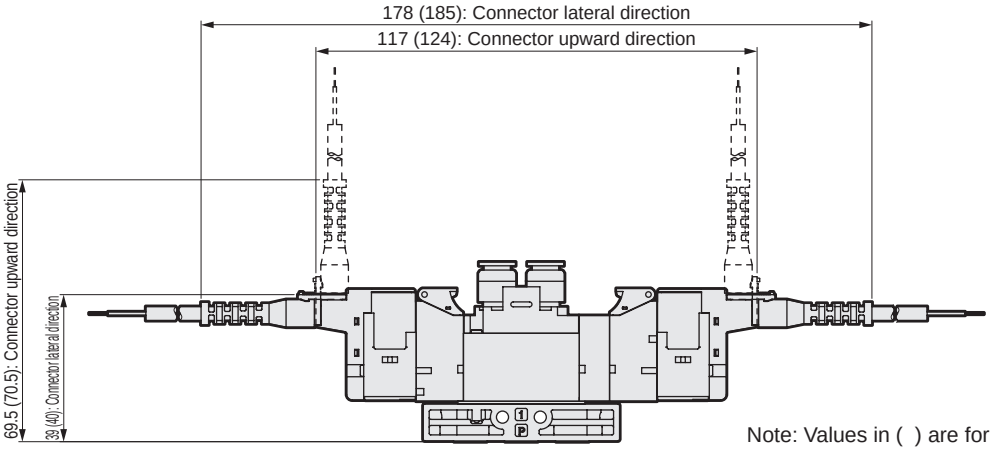

Note: Values in ( ) are for AC voltage.

Dimensions CAD

4GA210R * NPT thread and G thread specifications are listed on pages 52 to 59.

● 2-position single grommet lead wire (blank)

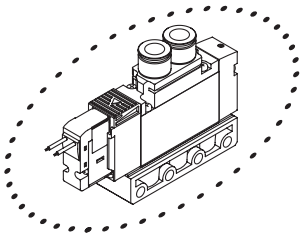

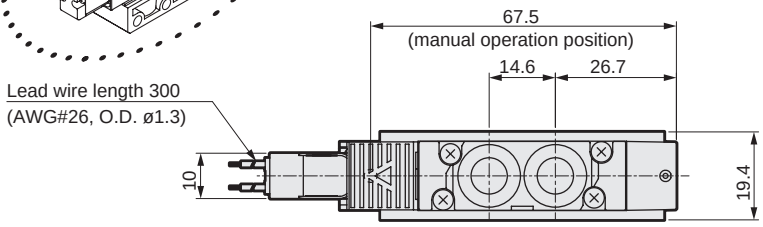

● Mounting plate (P)

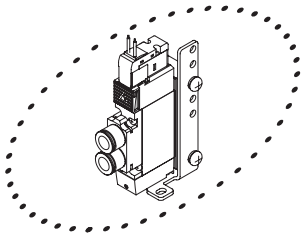

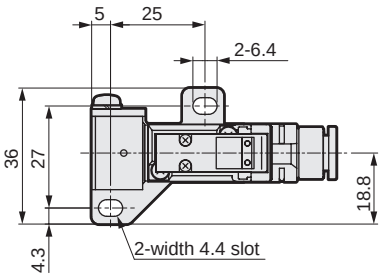

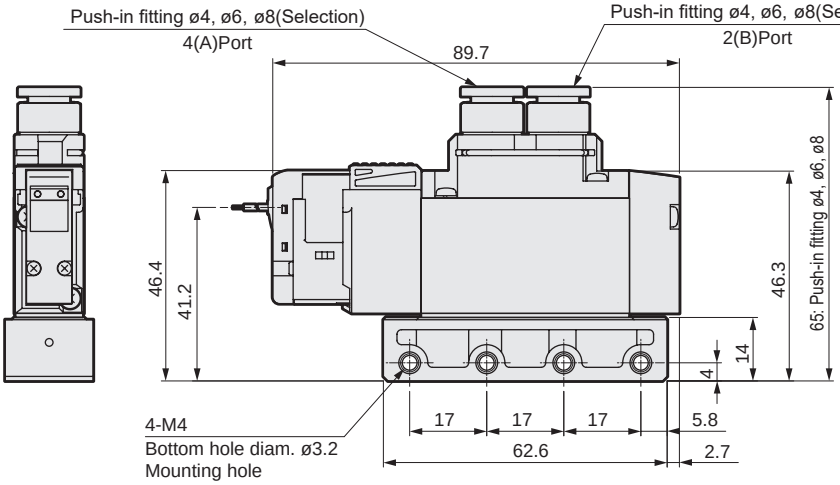

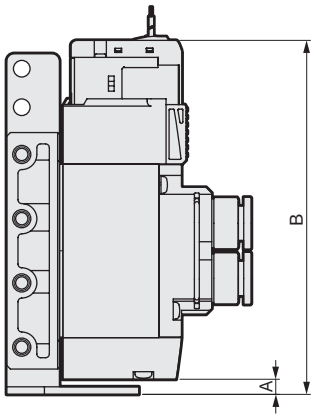

*Refer to page 853 for mounting hole details.

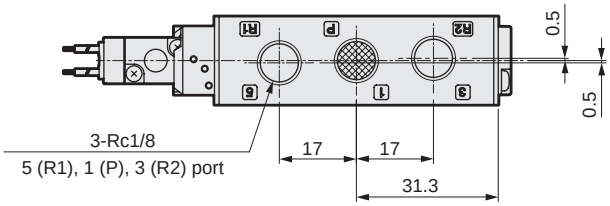

Electrical connections	A	B
Grommet lead wire	4	93.7
E, EJ type connector (upward direction), DC voltage		102
E, EJ type connector (upward direction), AC voltage		105.5
DIN terminal box (inner direction)		112.7

● Rc1/8 female thread (06)

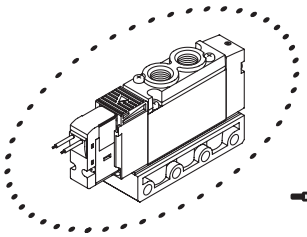

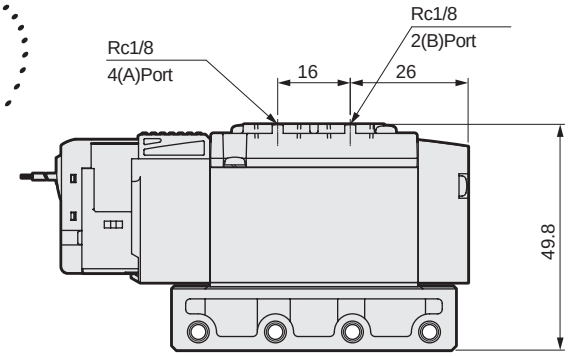

Dimensions

● E-connector (E)

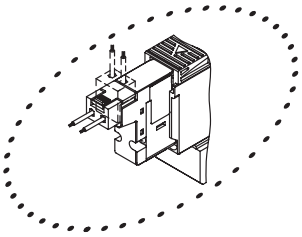

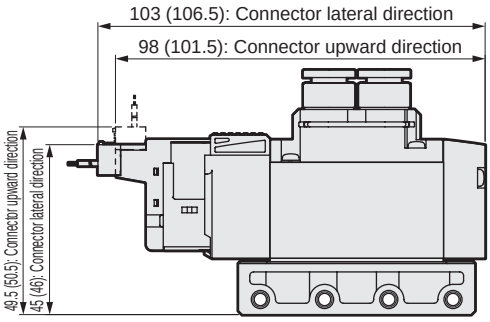

Note: Values in ( ) are for AC voltage.

● EJ type connector (E**J)

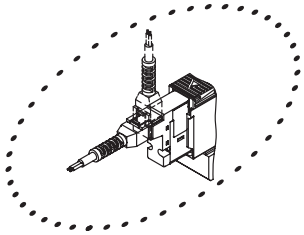

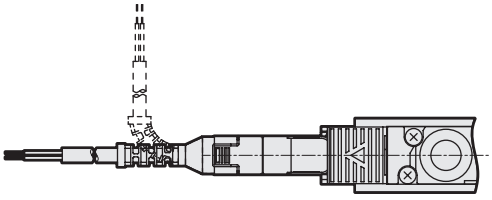

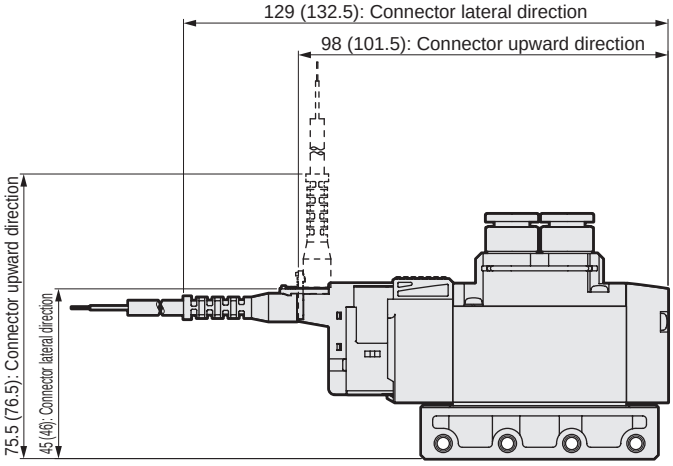

Note: Values in ( ) are for AC voltage.

● DIN terminal box (B)

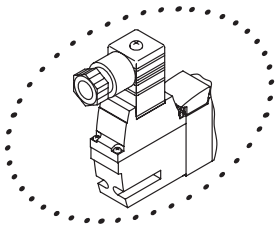

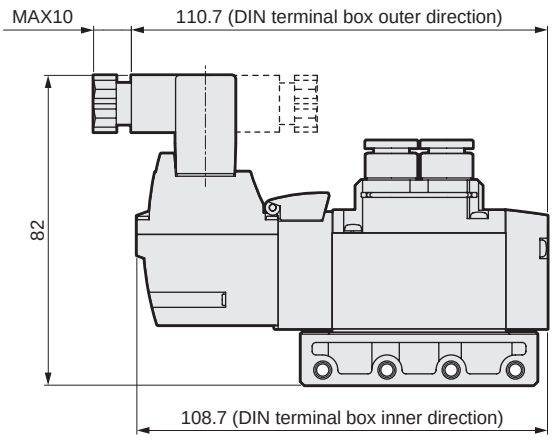

Note: DIN terminal box assembly is shipped facing inward.

Dimensions CAD

4GA220R * NPT thread and G thread specifications are listed on pages 52 to 59.

● 2-position double grommet lead wire (blank)

3GA2660R, 3GA2670R, 3GA2760R, 3GA2770R

● Two 3-port valves integrated grommet lead wire (blank)

● Mounting plate (P)

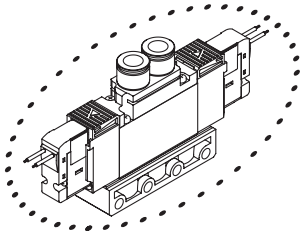

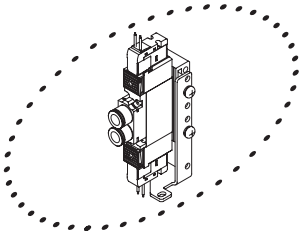

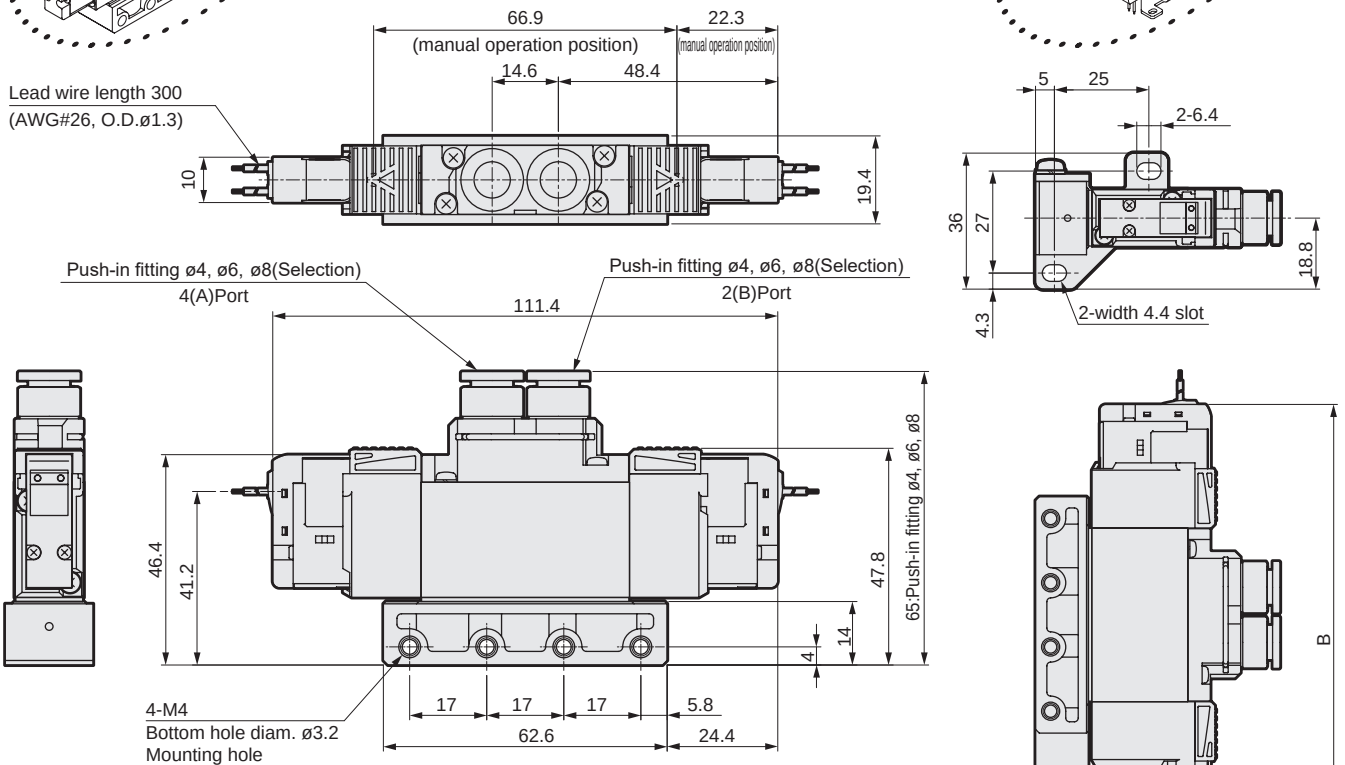

*Refer to page 853 for mounting hole details.

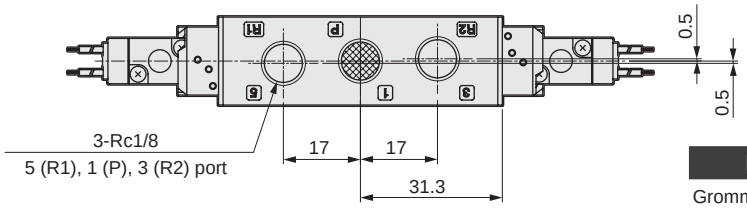

Electrical connections	A	B
Grommet lead wire	11.8	123.2
E, EJ type connector (upward direction), DC voltage	3.5	131.5
E, EJ type connector (upward direction), AC voltage	10.5	148.5
DIN terminal box (inner direction)	3	152.4

● Rc1/8 female thread (06)

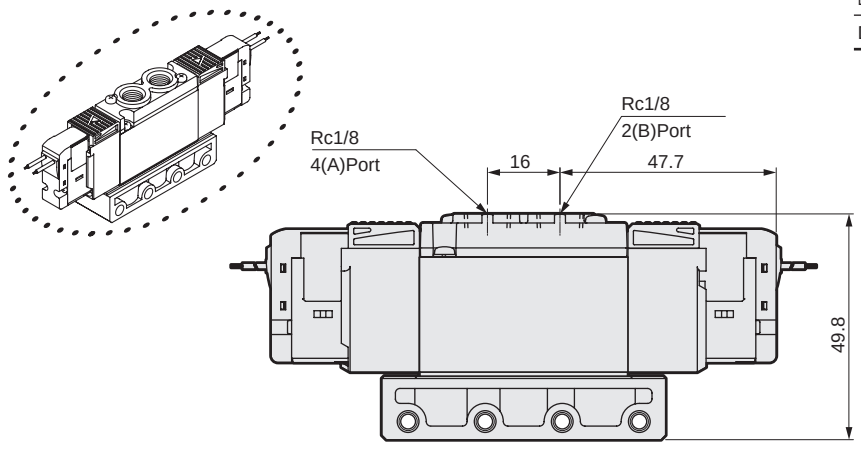

Dimensions

● E-connector (E)

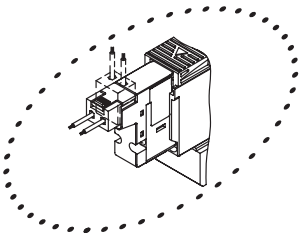

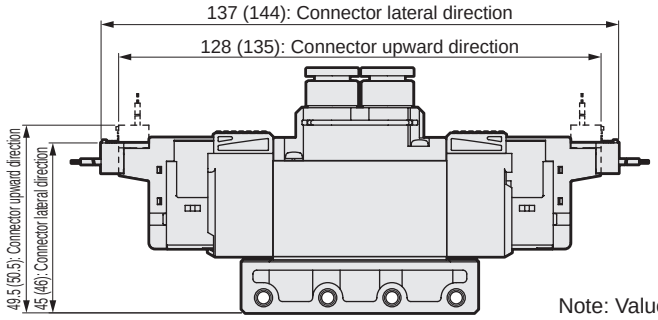

Note: Values in ( ) are for AC voltage.

● EJ type connector (E**J)

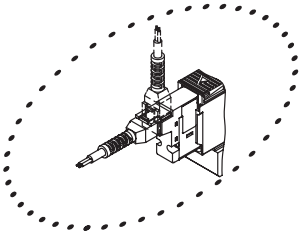

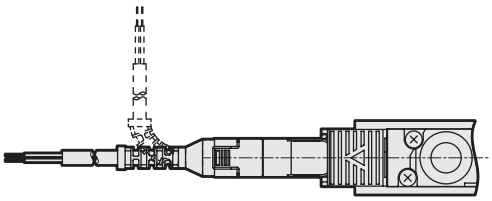

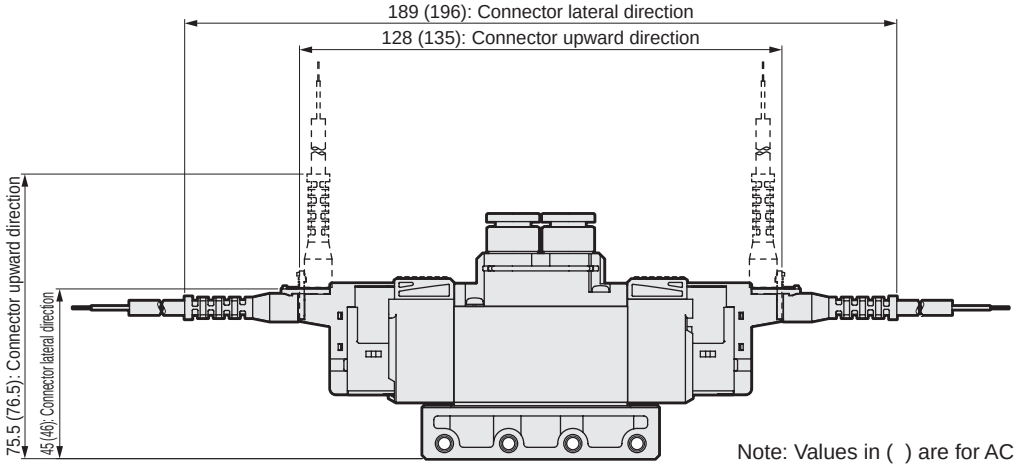

Note: Values in ( ) are for AC voltage.

● DIN terminal box (B)

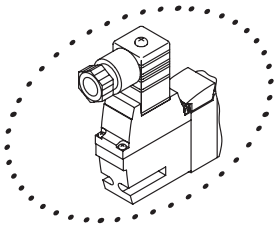

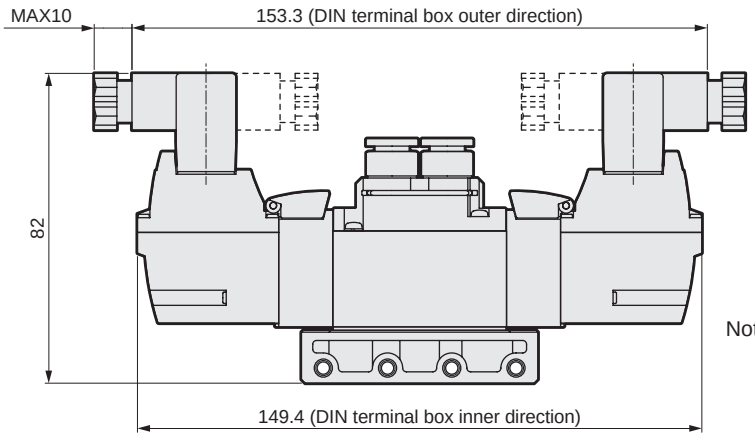

Note: DIN terminal box assembly is shipped facing inward.

Dimensions CAD

4GA2 3/4/5 0R * NPT thread and G thread specifications are listed on pages 52 to 59.

● 3-position grommet lead wire (blank)

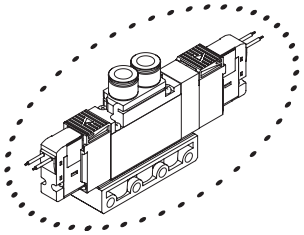

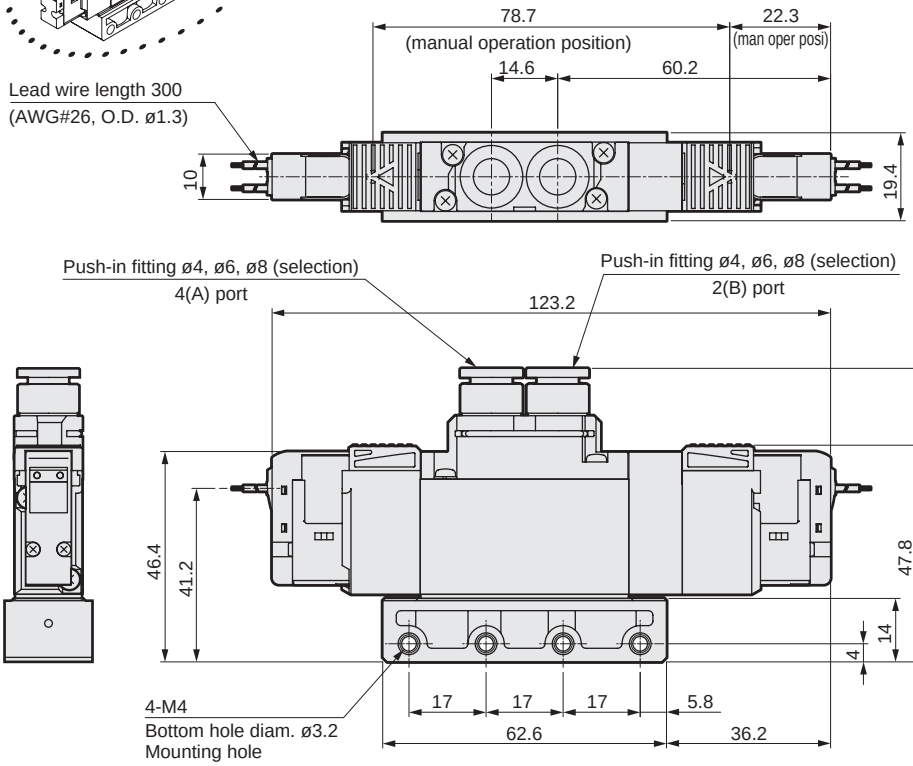

*Refer to page 853 for mounting hole details.

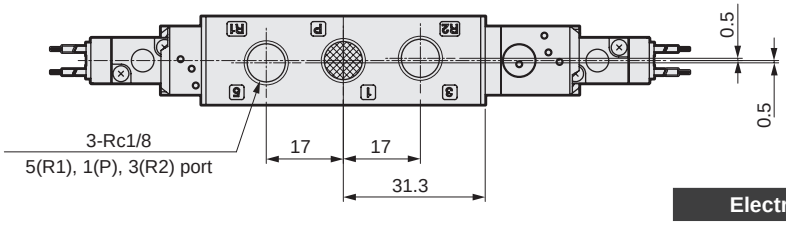

● Mounting plate (P)

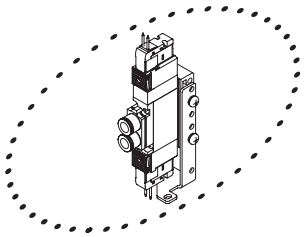

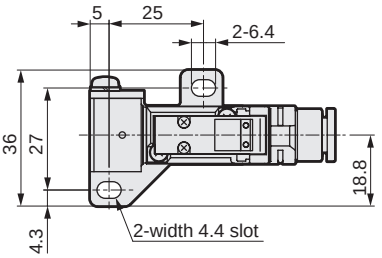

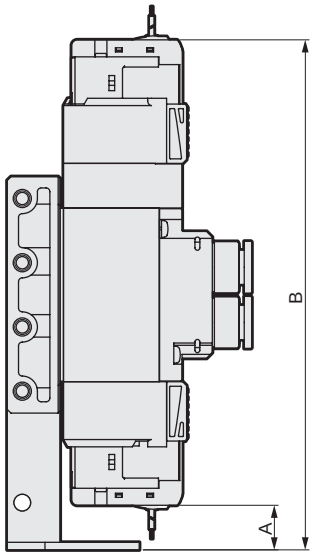

Electrical connections	A	B
Grommet lead wire	11.8	135
E, EJ type connector (upward direction), DC voltage	3.5	143
E, EJ type connector (upward direction), AC voltage	10.5	160.5
DIN terminal box (inner direction)	3	164.2

● Rc1/8 female thread (06)

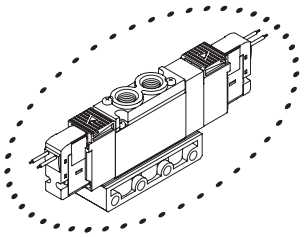

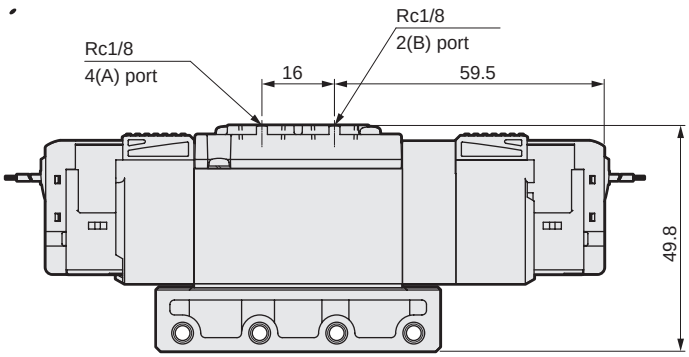

Dimensions

● E-connector (E)

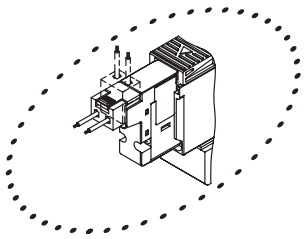

Note: Values in ( ) are for AC voltage.

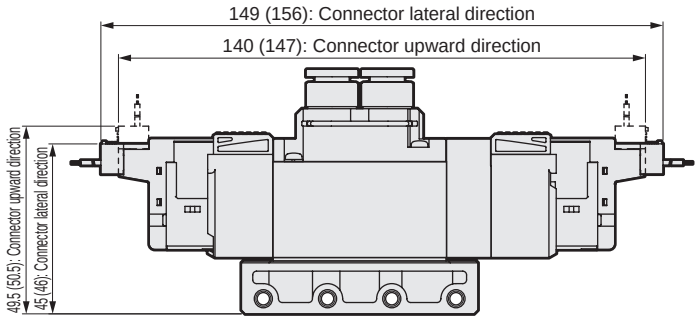

● EJ type connector (E**J)

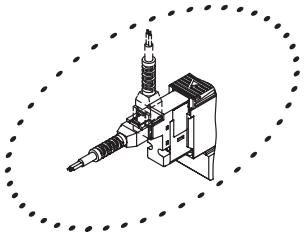

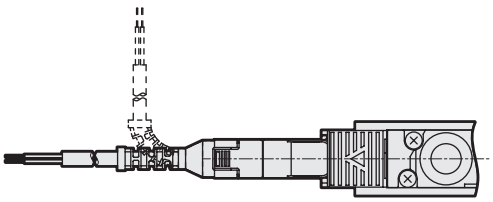

Note: Values in ( ) are for AC voltage.

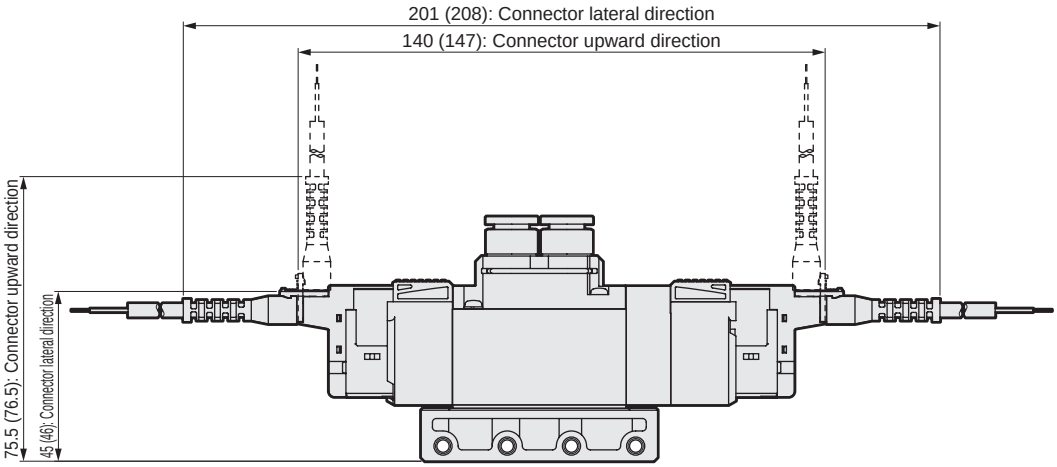

● DIN terminal box (B)

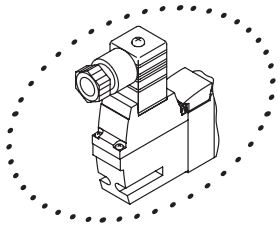

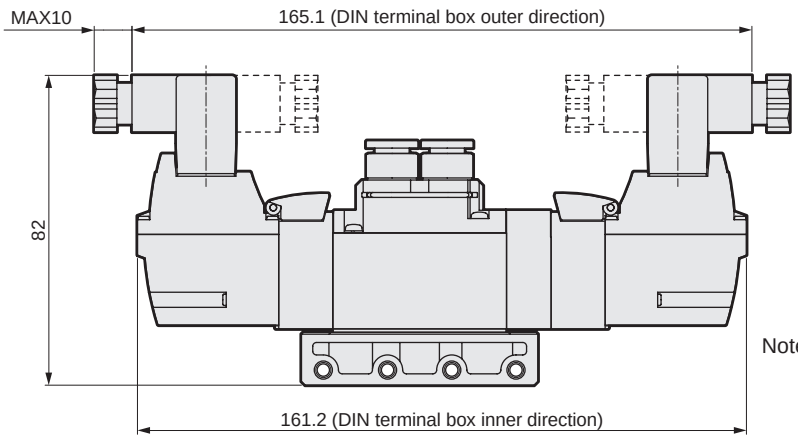

Note: DIN terminal box assembly is shipped facing inward.

Dimensions CAD

4GA310R * NPT thread and G thread specifications are listed on pages 52 to 59.

● 2-position single grommet lead wire (blank)

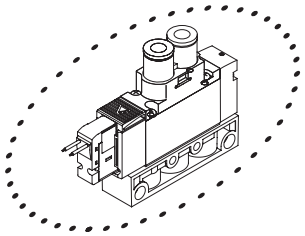

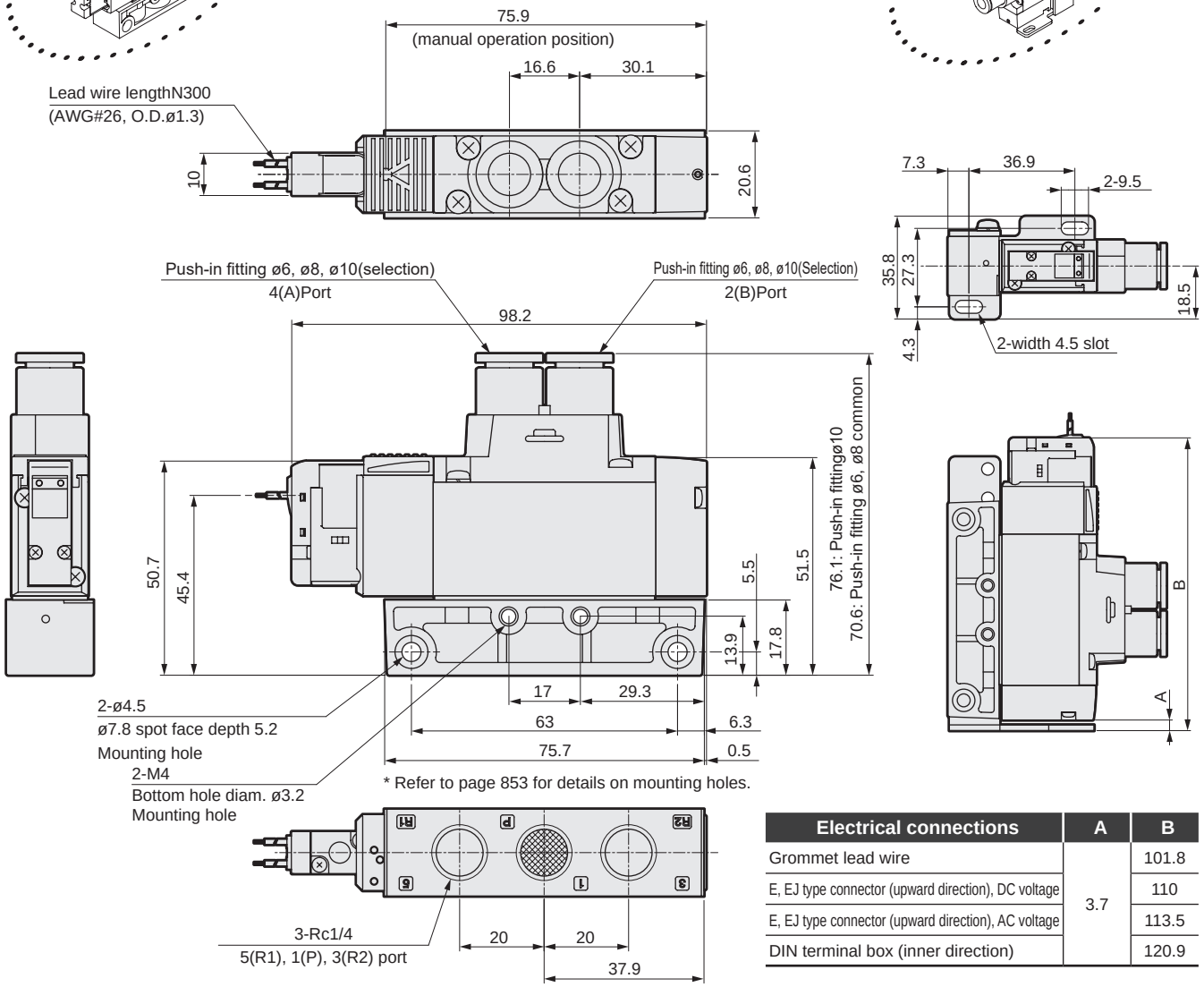

* Refer to page 853 for details on mounting holes.

● Mounting plate (P)

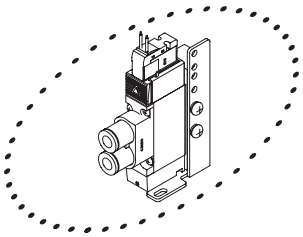

Electrical connections	A	B
Grommet lead wire	3.7	101.8
E, EJ type connector (upward direction), DC voltage		110
E, EJ type connector (upward direction), AC voltage		113.5
DIN terminal box (inner direction)		120.9

● Rc1/4 female thread (08)

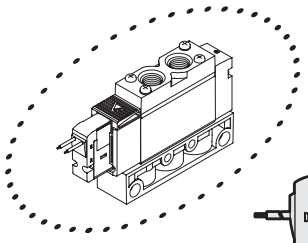

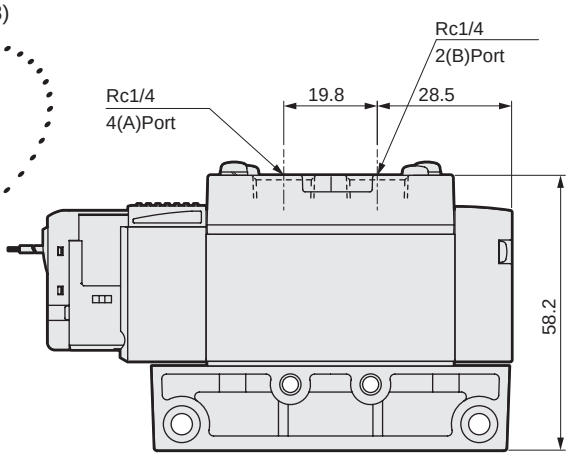

Dimensions

● E-connector (E)

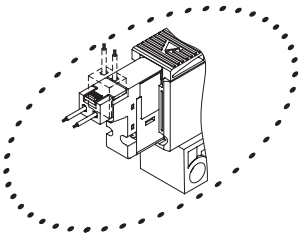

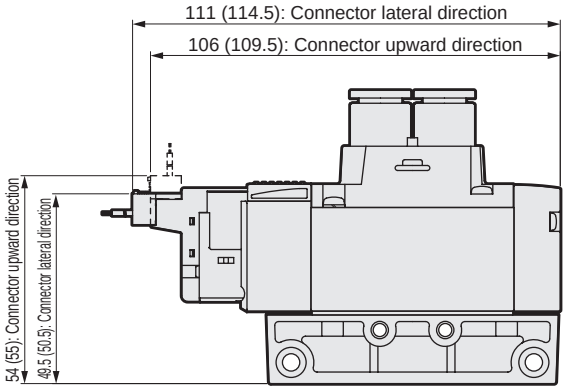

Note: Values in ( ) are for AC voltage.

● EJ type connector (E**J)

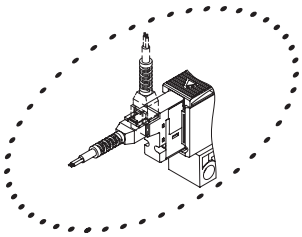

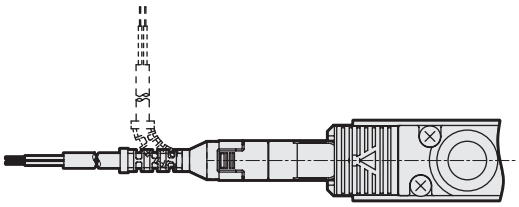

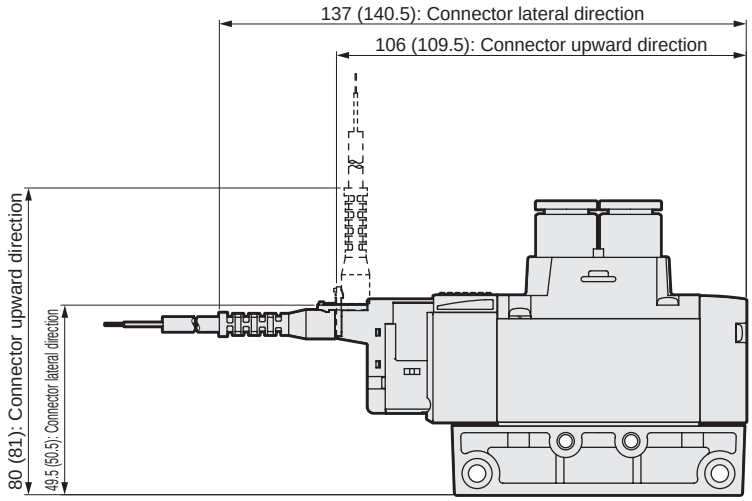

Note: Values in ( ) are for AC voltage.

● DIN terminal box (B)

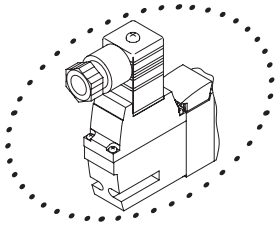

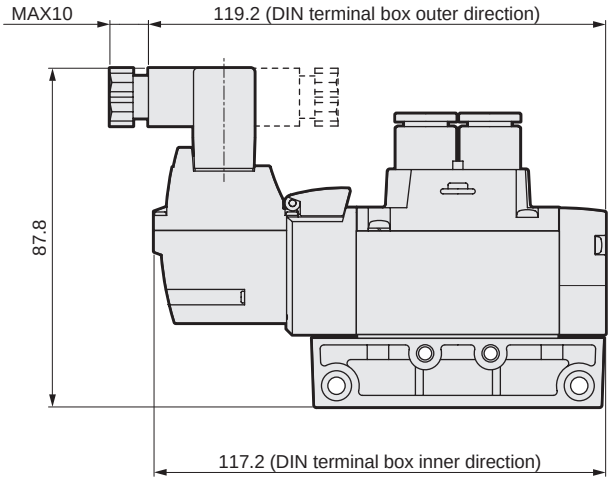

Note: DIN terminal box assembly is shipped facing inward.

Dimensions CAD

4GA320R * NPT thread and G thread specifications are listed on pages 52 to 59.

● 2-position double grommet lead wire (blank)

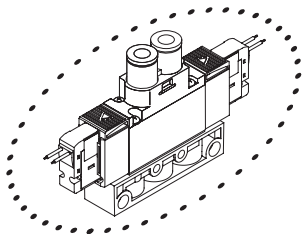

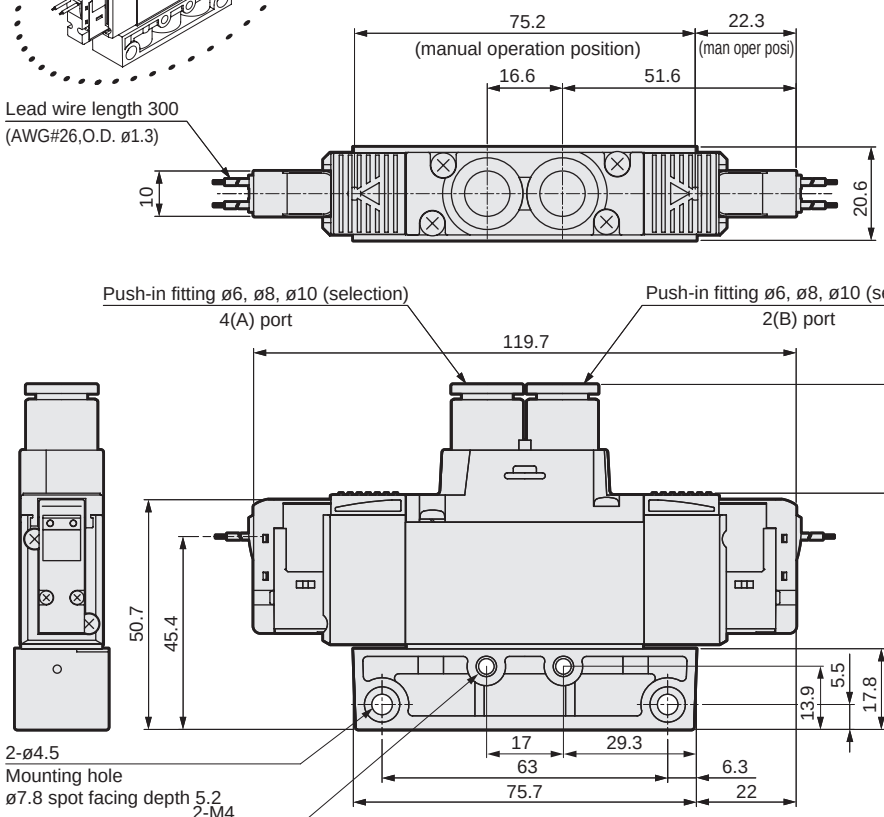

● Mounting plate (P)

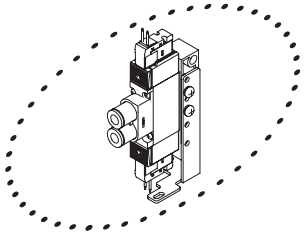

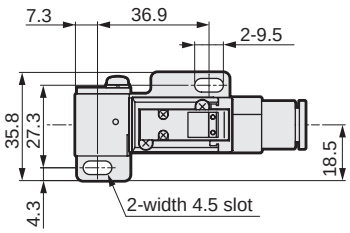

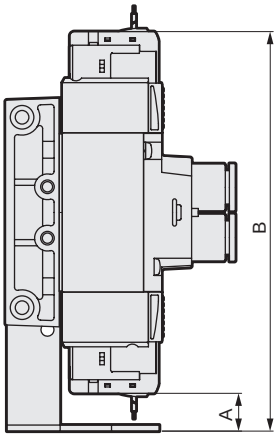

Electrical connections	A	B
Grommet lead wire	12.6	132.2
E, EJ type connector (upward direction), DC voltage	4.5	140.5
E, EJ type connector (upward direction), AC voltage	11	157.5
DIN terminal box (inner direction)	3.7	161.4

● Rc1/4 female thread (08)

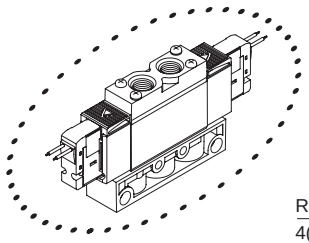

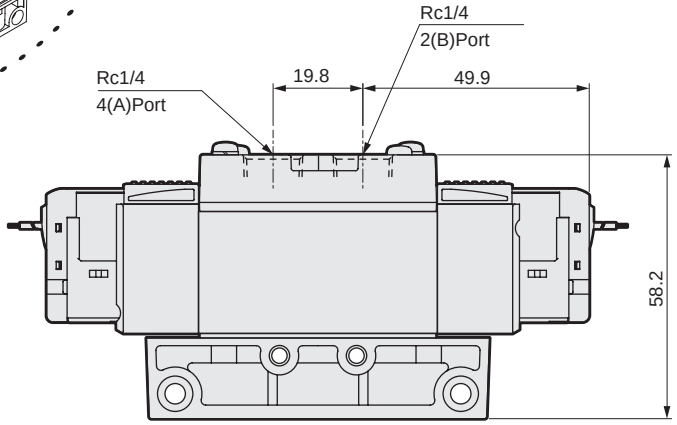

Dimensions

● E-connector (E)

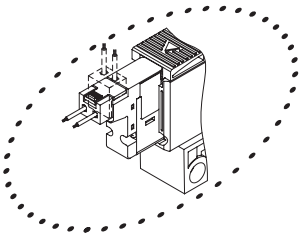

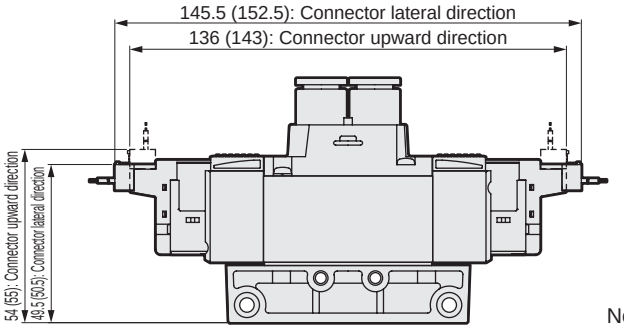

Note: Values in ( ) are for AC voltage.

● EJ type connector (E**J)

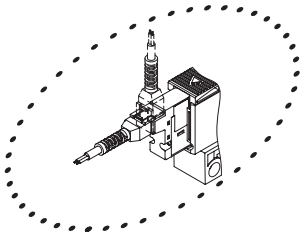

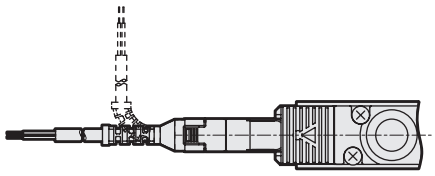

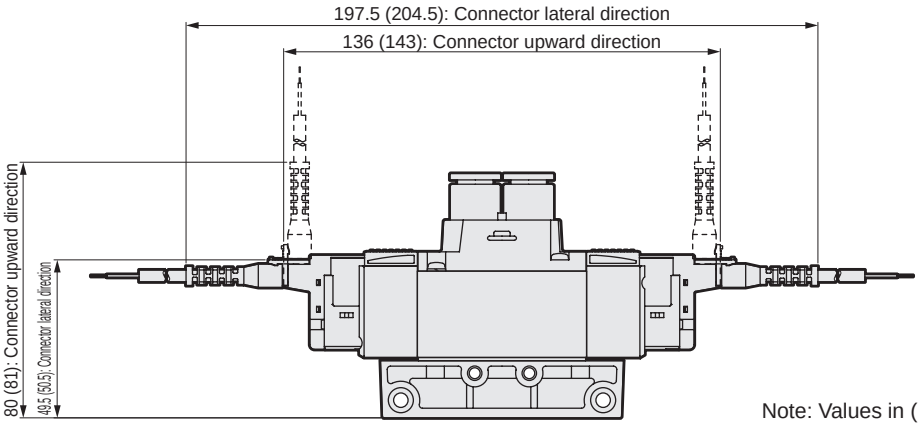

Note: Values in ( ) are for AC voltage.

● DIN terminal box (B)

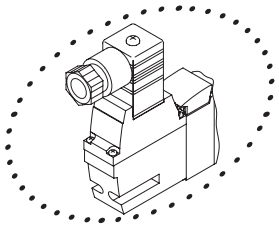

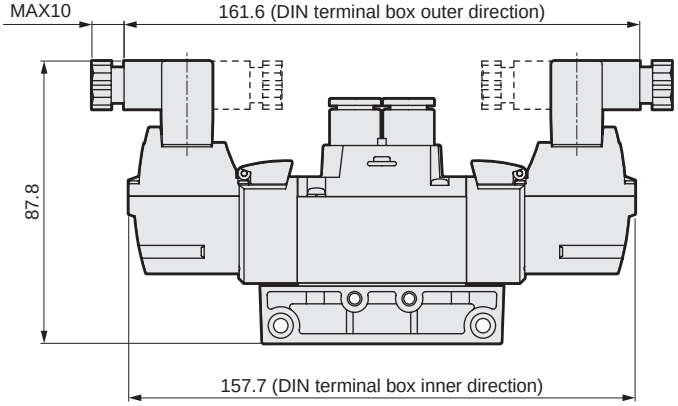

Note: DIN terminal box assembly is shipped facing inward.

Dimensions CAD

4GA3$^{3}_{5}$0R * NPT thread and G thread specifications are listed on pages 52 to 59.

● 3-position grommet lead wire (blank)

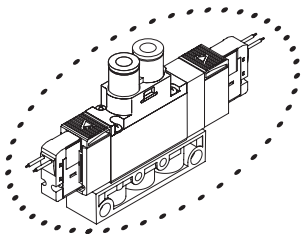

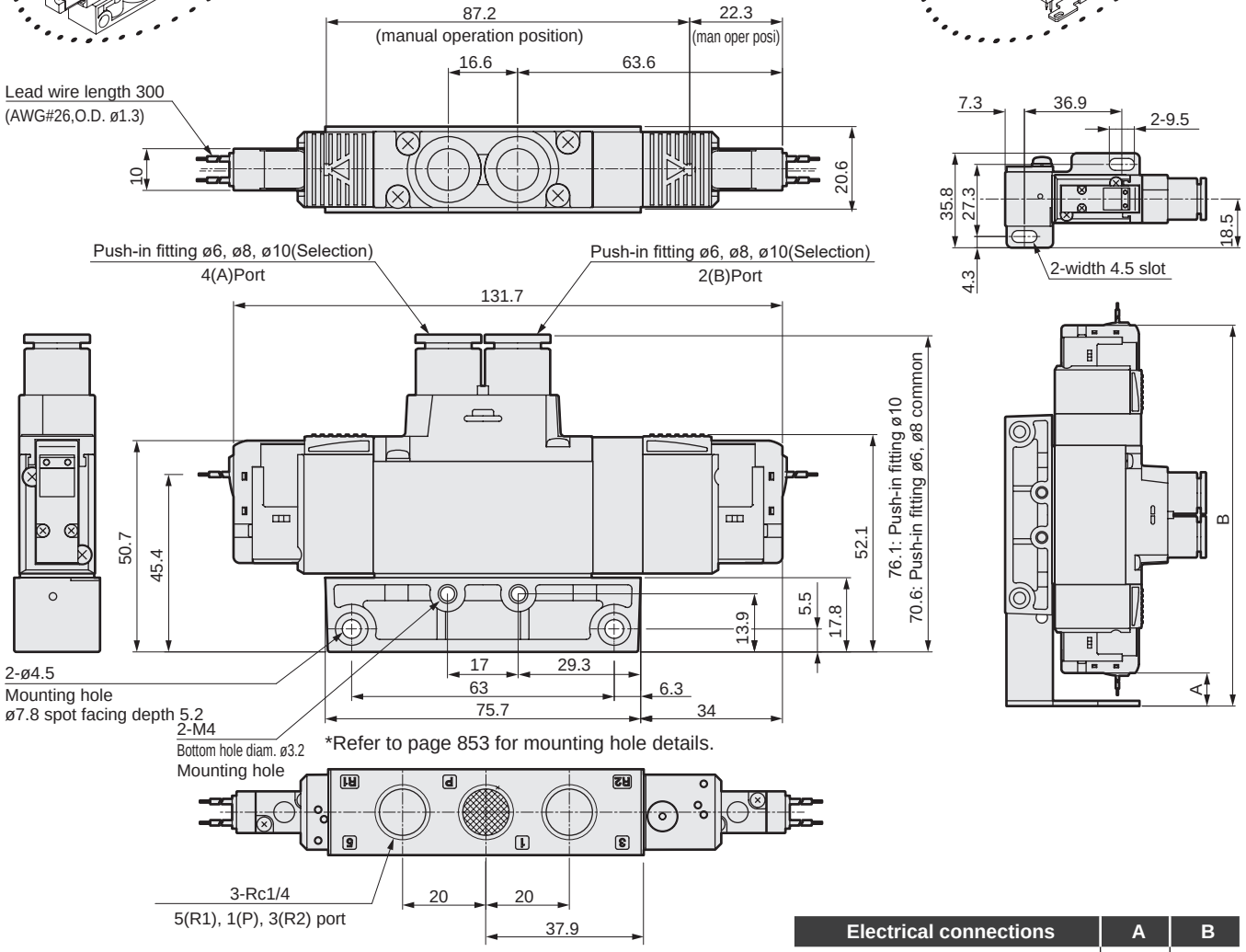

● Mounting plate (P)

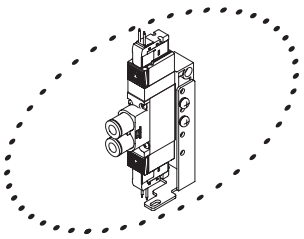

Electrical connections	A	B
Grommet lead wire	12.6	144.3
E, EJ type connector (upward direction), DC voltage	4.5	152.5
E, EJ type connector (upward direction), AC voltage	11	169.5
DIN terminal box (inner direction)	3.7	173.4

● Rc1/4 female thread (08)

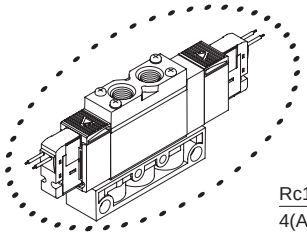

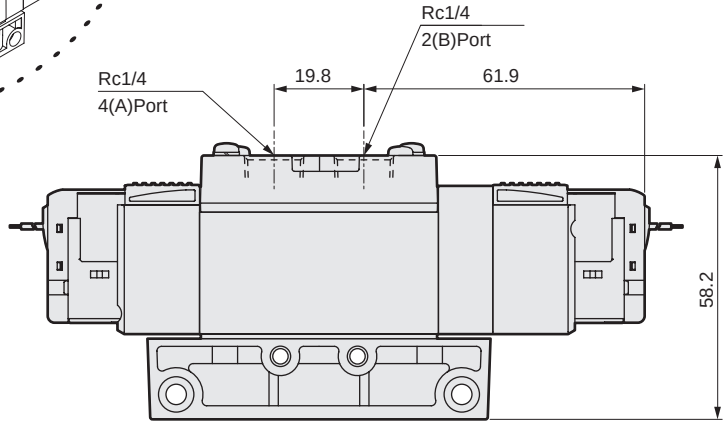

Dimensions

● E-connector (E)

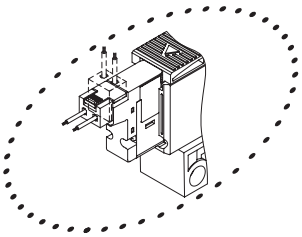

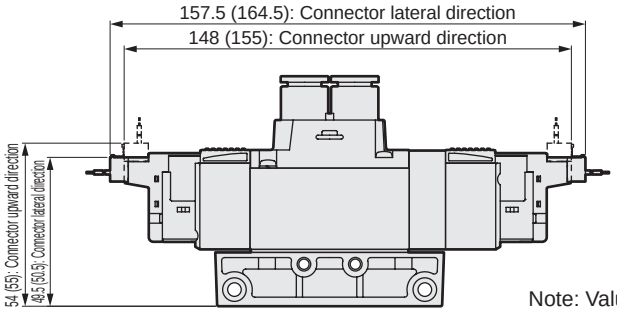

Note: Values in ( ) are for AC voltage.

● EJ type connector (E**J)

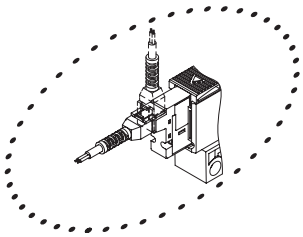

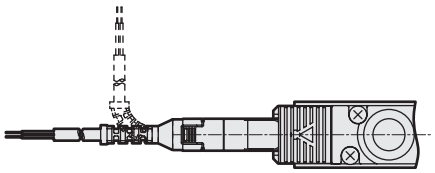

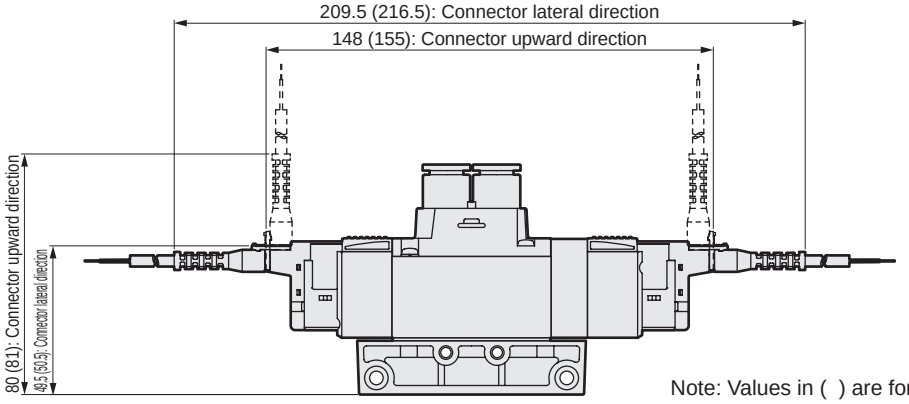

Note: Values in ( ) are for AC voltage.

● DIN terminal box (B)

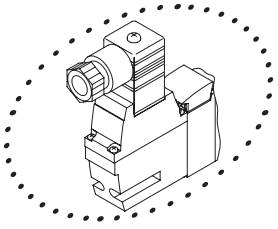

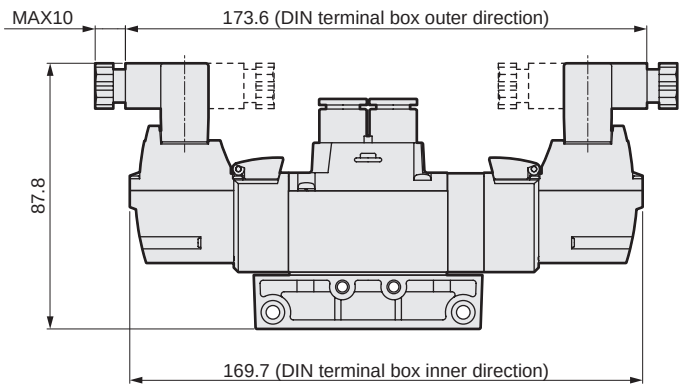

Note: DIN terminal box assembly is shipped facing inward.

Dimensions Port size; NPT thread

3GA1$^{1}_{11}{}^{1}_{66}{}^{1}_{67}{}^{1}_{76}{}^{1}_{77}$0R, 4GA1$^{1}_{2}{}^{1}_{3}{}^{1}_{4}{}^{1}_{5}$OR

● 2-position single grommet lead wire (blank)

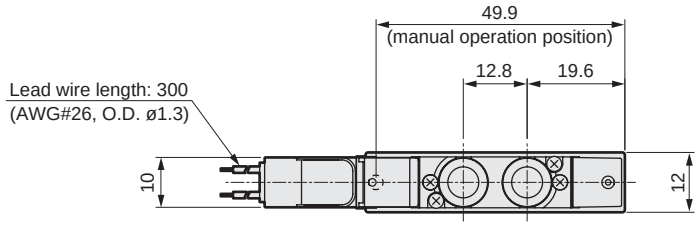

● Mounting plate (P)

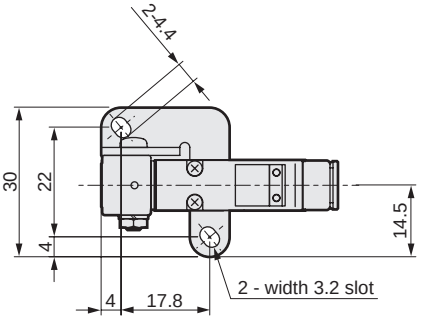

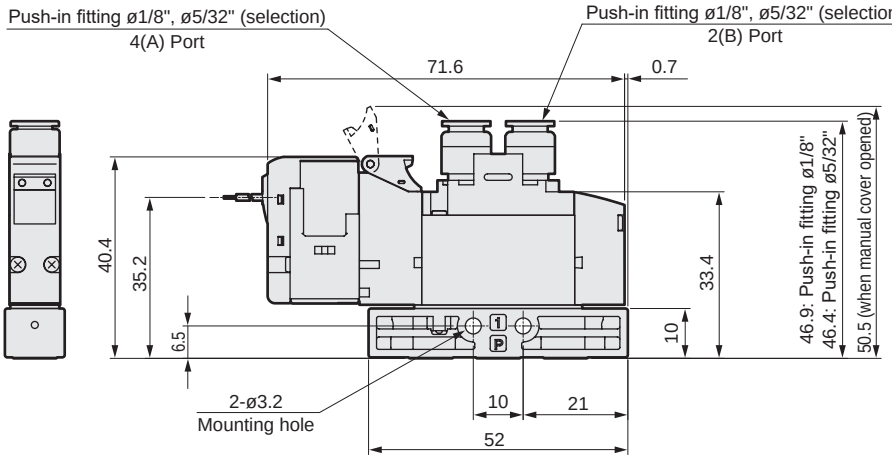

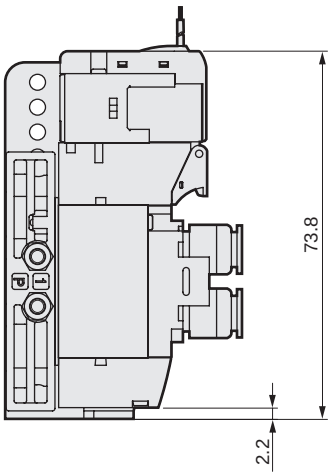

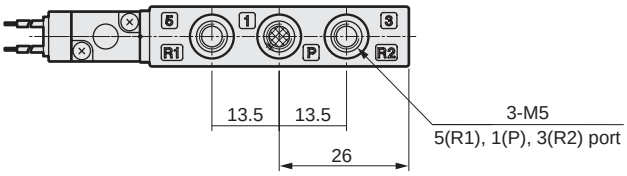

Dimensions Port size; NPT thread

● E-connector (E)

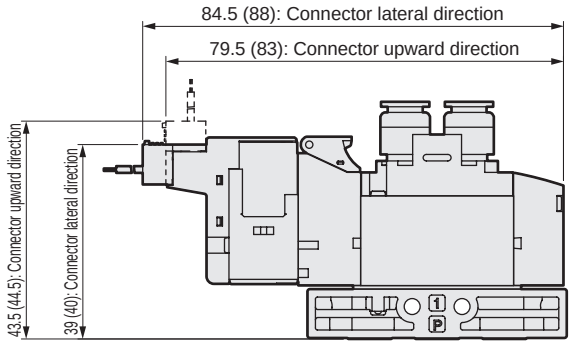

Note: Values in ( ) are for AC voltage.

● EJ type connector (E**J)

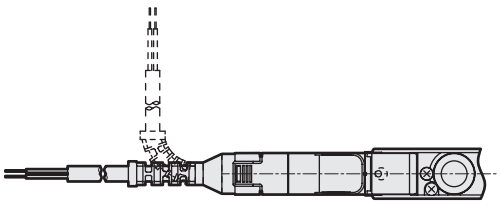

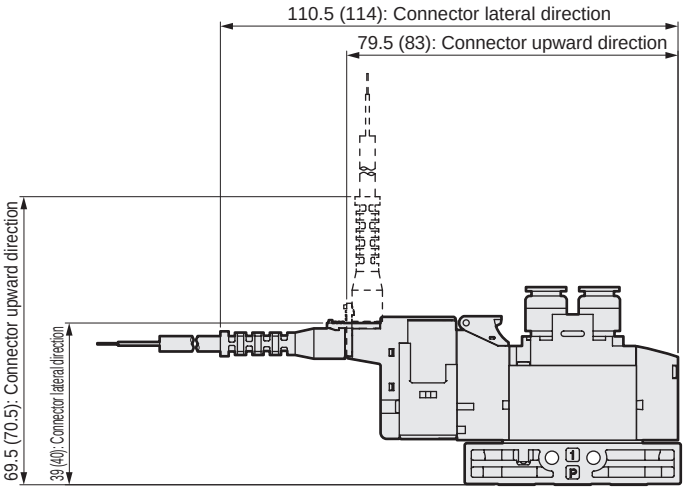

Note: Values in ( ) are for AC voltage.

Dimensions port size; NPT thread

3GA2$^{1}_{11}$0R, 4GA2$^{1}_{2}$OR

$^{66}_{67}$ $^{3}_{4}$
$^{76}_{77}$ ^{5}

● 2-position single grommet lead wire (blank)

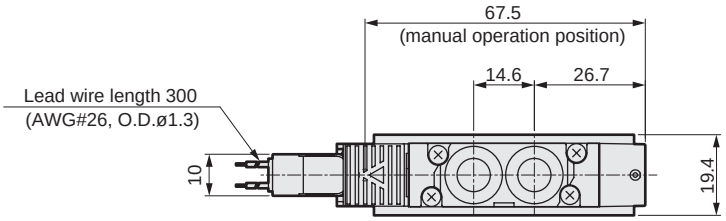

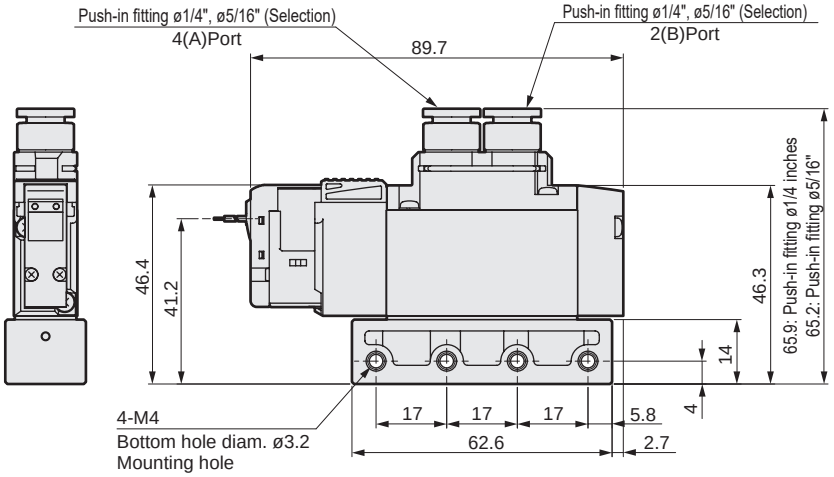

*Refer to page 853 for mounting hole details.

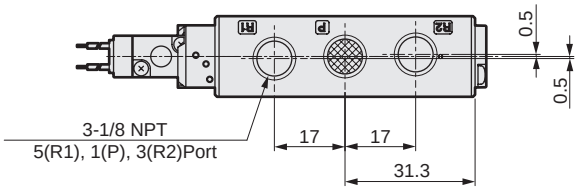

● 1/8NPT female thread (06N)

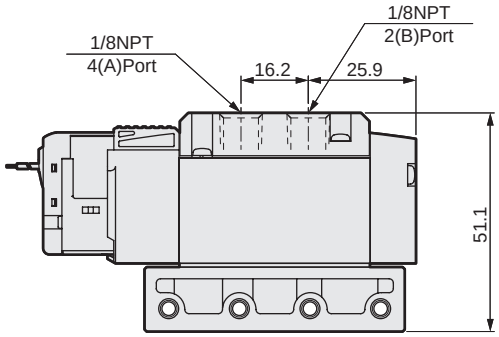

● Mounting plate (P)

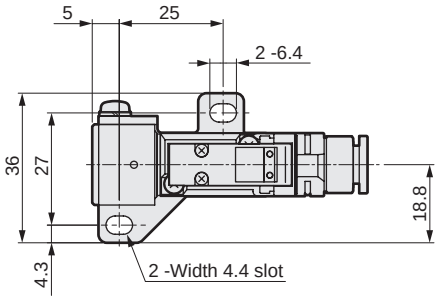

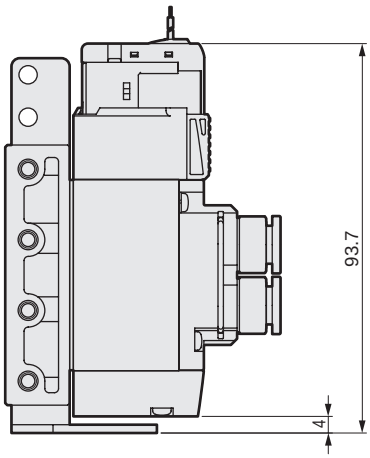

Dimensions port size; NPT thread

● E-connector (E)

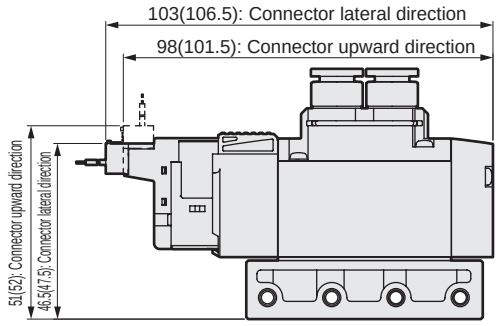

Note:( )is for AC voltage

● EJ type connector (E**J)

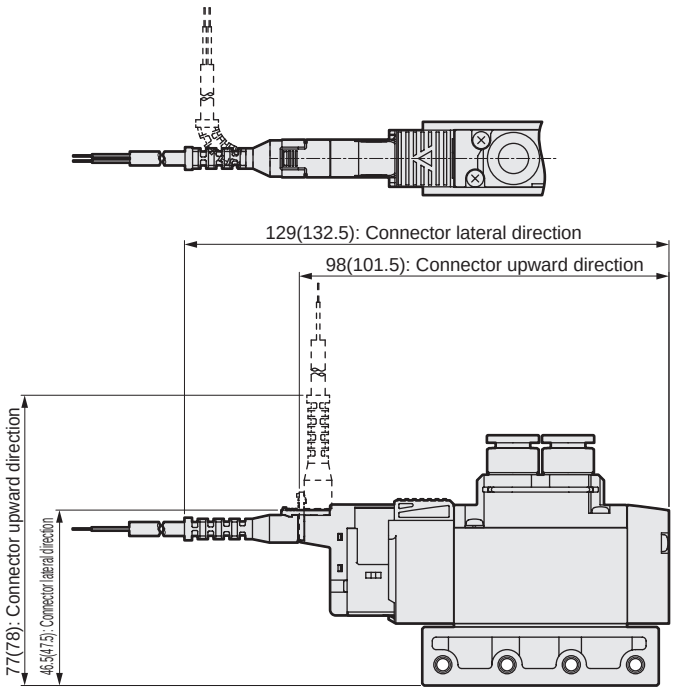

Note: ( )is for AC voltage

● DIN terminal box (B)

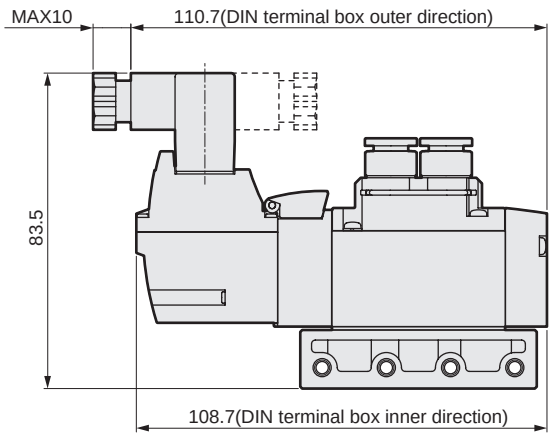

Note: DIN terminal box assembly is shipped facing inward.

Dimensions port size; NPT thread, G1/4 thread

3GA3$^{1}_{11}$0R, 4GA3$^{1}_{2}_{3}_{4}_{5}$OR

● 2-position single grommet lead wire (blank)

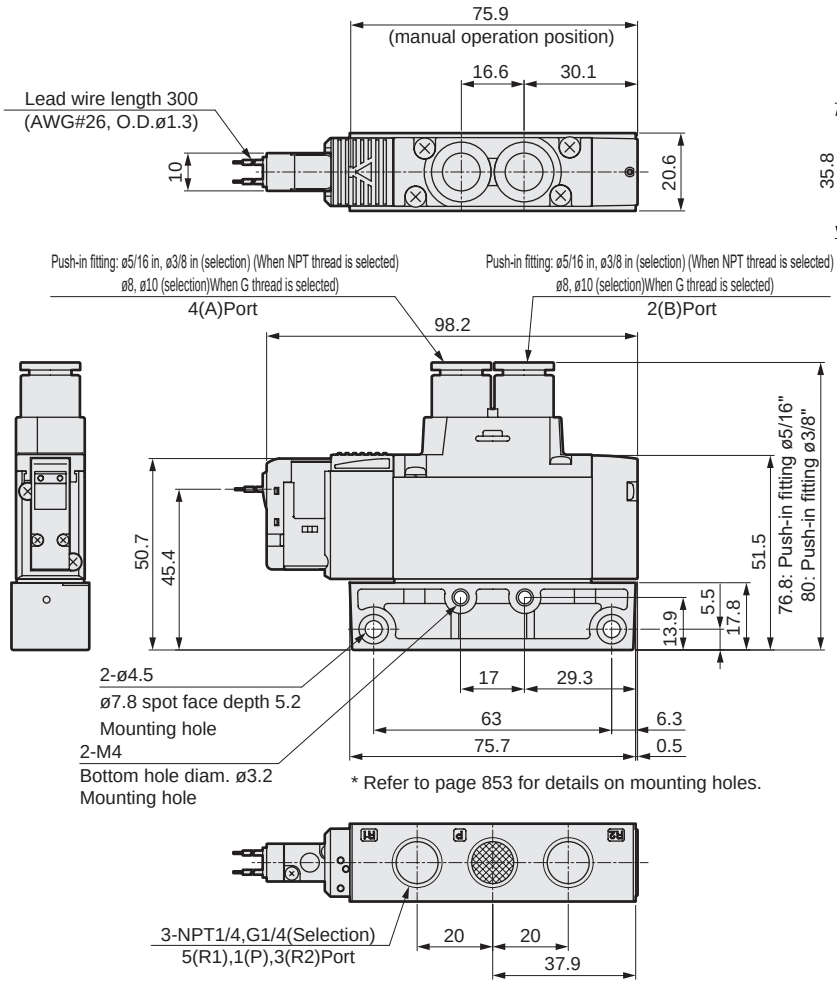

● Mounting plate (P)

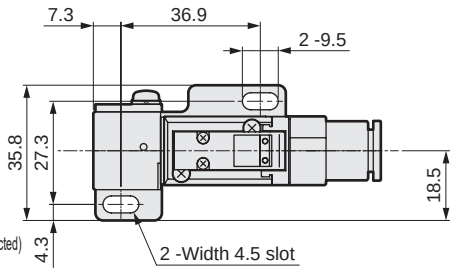

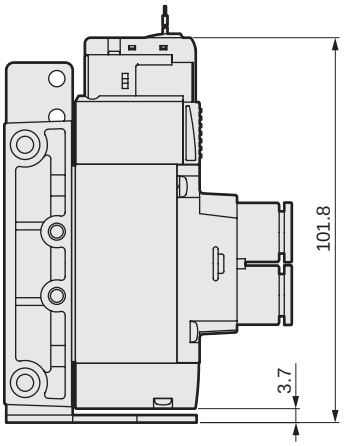

● NPT1/4 female thread (08N)

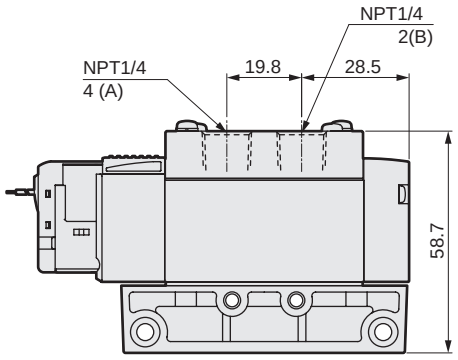

● G1/4 female thread (08G)

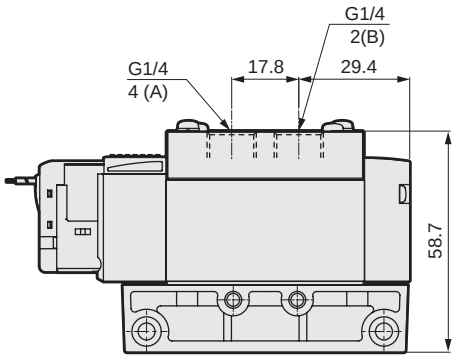

Dimensions Port size; NPT thread

● E-connector (E)

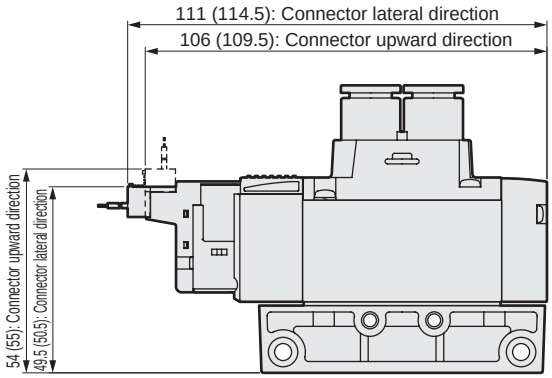

Note: Values in ( ) are for AC voltage.

● EJ type connector (E**J)

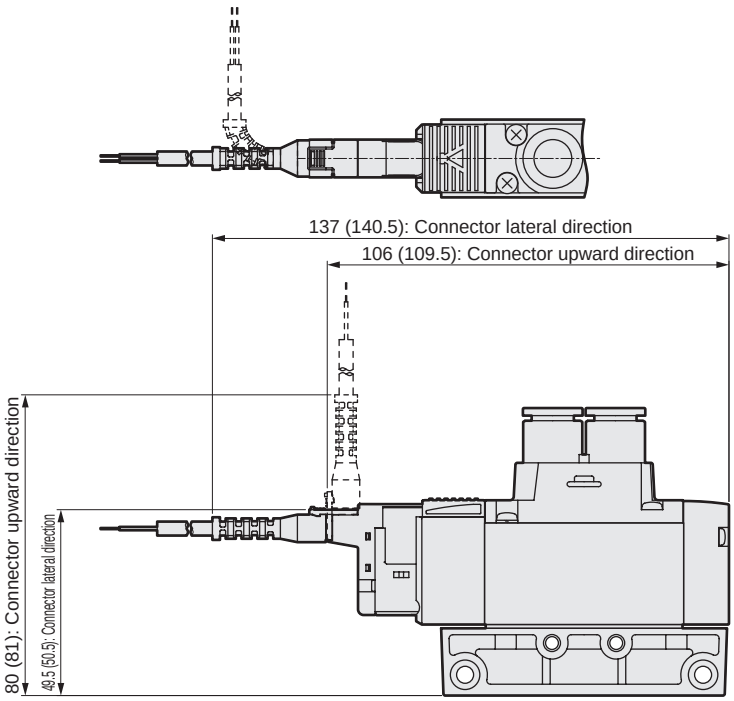

Note: Values in ( ) are for AC voltage.

● DIN terminal box (B)

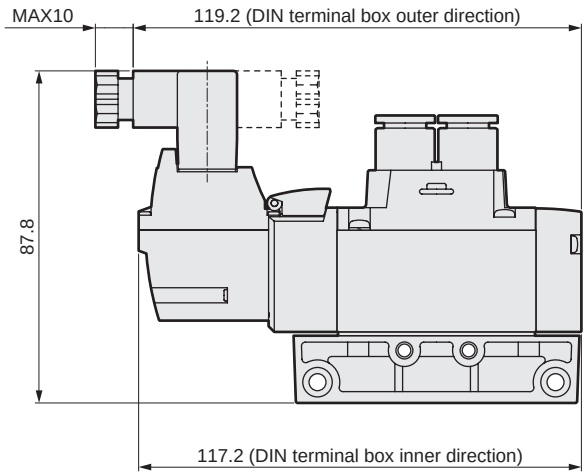

Note: DIN terminal box assembly is shipped facing inward.

Dimensions port size; G thread

3GA2$^{1}_{11}$0R, 4GA2$^{1}_{2}$OR
$^{66}_{67}$ $^{3}_{4}$
$^{76}_{77}$ ^{5}

● 2-position single grommet lead wire (blank)

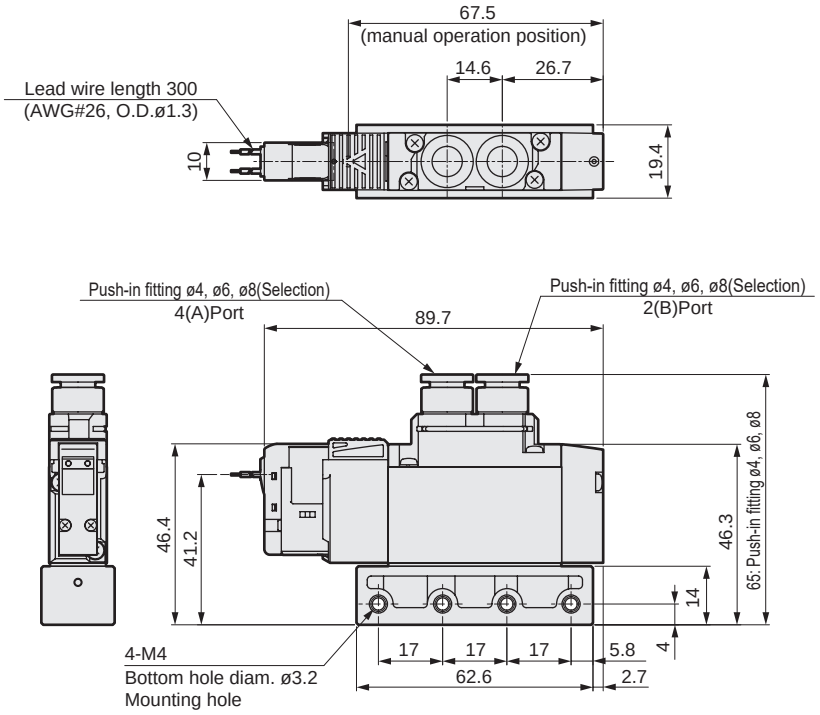

*Refer to page 853 for mounting hole details.

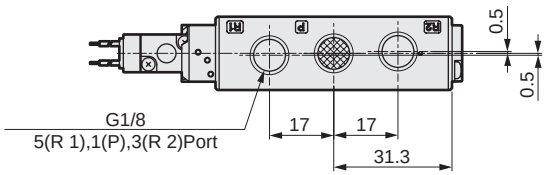

● Mounting plate (P)

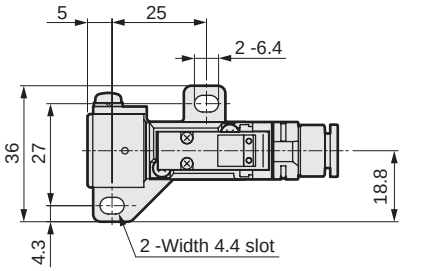

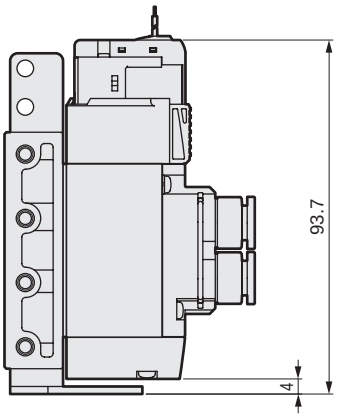

● G1/8 female thread (06G)

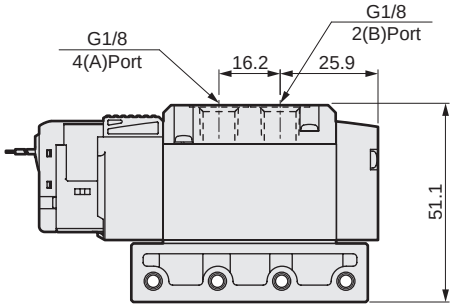

Dimensions port size; G thread

● E-connector (E)

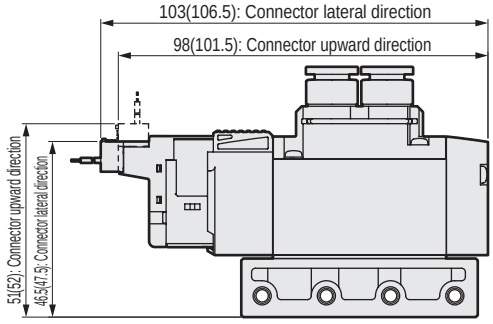

Note: ( ) is for AC voltage

● EJ type connector (E**J)

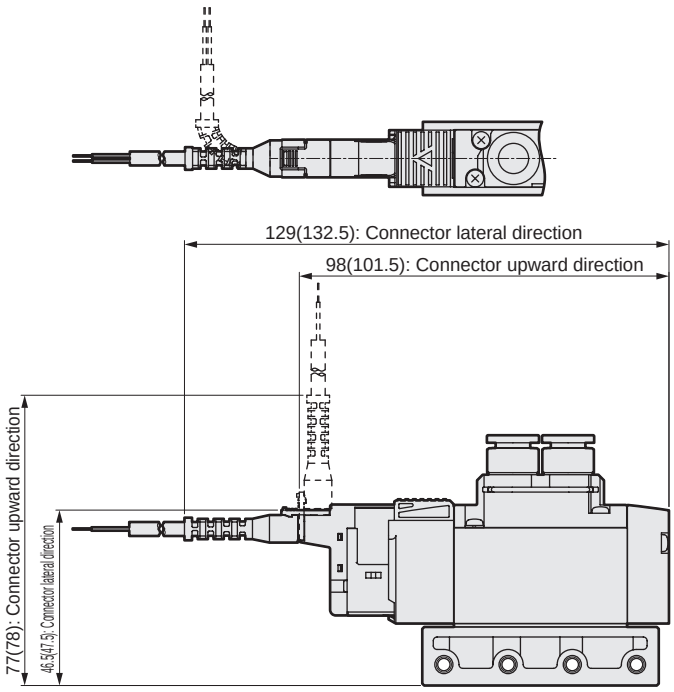

Note: ( ) is for AC voltage

● DIN terminal box (B)

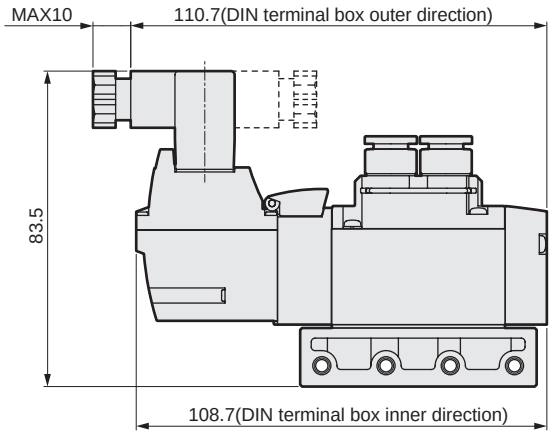

Note: DIN terminal box assembly is shipped facing inward.

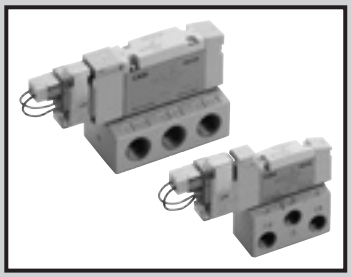

Single valve
Base piping

3GB1/2, 4GB1/2/3 Series

● Cylinder bore size: ø20 to ø100

JIS symbol

● Two 3-port valves integrated

(A side valve: NC, B side valve: NC)

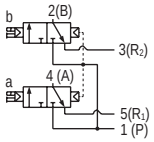

(A side valve: NC, B side valve: NO)

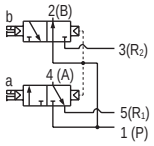

(A side valve: NO, B side valve: NC)

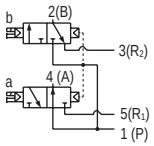

(A side valve: NO, B side valve: NO)

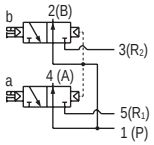

● 5-port valve

2 position single

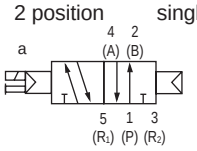

2-position double

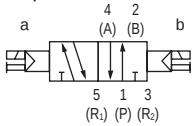

3-position
All ports closed

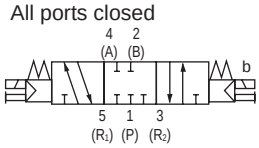

3-position A/B/R connection

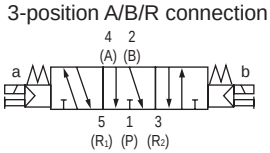

3-position P/A/B connection

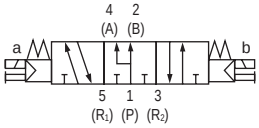

Common specifications

Item		Description
Valve and operation		Pilot operated soft spool valve
Working fluid		Compressed air
Max. working pressure	MPa	0.7
Min. working pressure	MPa	0.2 (*3)
Proof pressure	MPa	1.05
Ambient temperature	°C	-5 to 55 (no freezing)
Fluid temperature	°C	5 to 55
Manual override		NNlock/lock common (standard)
Pilot exhaust method	Internal pilot	Main valve/pilot valve common exhaust
	External pilot	Main valve/pilot valve individual exhaust
Lubrication	(*1)	Not required
Degree of protection	(*2)	Dust-proof
Vibration resistance	m/s²	50 or less
Shock resistance	m/s²	300 or less
Atmosphere		Cannot be used in corrosive gas environments

*1 Use turbine oil Class 1 ISO VG32 for lubrication. Excessive or intermittent lubrication results in unstable operation.

*2 Avoid dripping water or oil, etc., during use. IP65 (water jet proof) applies for DIN terminal box specifications. However, the specified outer diameter of the cord and tightening torque must be used for fixing in place.

*3 The working pressure range is 0 to 0.7 MPa when the external pilot (option code: K) is selected. Set the external pilot pressure between 0.2 and 0.7 MPa.

Electrical specifications

Item		Description					
Rated voltage V		24 DC	12 DC	5 DC	3 DC	100 AC	200 AC
Voltage fluctuation range		±10%					
Holding current A (*4)	Standard	0.015 (0.017)	0.030 (0.034)	0.072 (0.082)	0.120 (0.136)	0.009 (0.009)	0.006 (0.006)
	Low exoergic/ energy circuit	0.005	0.010	-		-	
Power consumption W (*4)	Standard	0.35(0.40)		0.35(0.40)		-	
	Low exoergic/ energy circuit	0.1		-		-	
Apparent power VA (*4)	Standard	-		-		0.93 (0.98)	1.20 (1.40)
Thermal class		B					
Surge suppressor		Option					
Indicator		Lamp (option)					

*4 Values in ( ) apply when lamp is included. In addition, the type with low exoergic/energy circuit is only available with lamp.

Individual specifications

Port size		3GB1, 4GB1	3GB2, 4GB2	4GB3
Rc thread	Port A/B	Rc1/8	Rc1/4	Rc1/4, Rc3/8
	Port P/R1/R2	Rc1/8	Rc1/4	Rc1/4, Rc3/8
NPT thread (*5)	Port A/B	NPT1/8	NPT1/4	NPT1/4, NPT3/8
	Port P/R1/R2	NPT1/8	NPT1/4	NPT1/4, NPT3/8
G thread (*5)	Port A/B	G1/8	G1/4	G1/4, G3/8
	Port P/R1/R2	G1/8	G1/4	G1/4, G3/8

*5: Available as made to order.

Performance/characteristics by model

Item			3GB1/4GB1		3GB2/4GB2		4GB3	
			ON	OFF	ON	OFF	ON	OFF
Response time ms	Two 3-port valves integrated		9	12	12	29	-	-
	2-position	Single	12	12	19	19	25	28
		Double	9	-	18	-	24	-
	3-position	ABR connection	8	15	17	30	23	45

Values with a lamp/surge suppressor are shown. The response times are values with working pressure of 0.5 MPa at 20°C, without lubrication.They depend on the pressure and the lubricant quality.

Weight

Item				3GB1/4GB1	3GB2/4GB2	4GB3
Weight g	2-position	Single	Grommet lead wire	80 (38)	156 (74)	215 (96)
			E-connector	82 (40)	158 (76)	217 (98)
			DIN terminal box	-	193 (111)	249 (130)
		Double	Grommet lead wire	97 (55)	173 (91)	233 (114)
			E-connector	101 (59)	177 (95)	237 (118)
			DIN terminal box	-	216 (134)	273 (154)
	3-position	All ports closed	Grommet lead wire	98 (56)	184 (102)	242 (123)
			E-connector	102 (60)	188 (106)	246 (127)
			DIN terminal box	-	227 (145)	282 (163)

- Values in ( ) do not include the single sub-plate. Values for the E-connector include the socket assembly (with 300 mm lead wire). For the EJ-connector, add 16 g/connector to the E-connector weight.
- The weight of the two 3-port valves integrated type is the same as that of 2-position double.

Flow characteristics

Model No.	Solenoid position		P → A/B		A/B → R1/R2	
			C[dm³/(s·bar)]	b	C[dm³//(s·bar)]	b
3GB1 4GB1	Two 3-port valves integrated		0.92	0.08	1.1	0.26
	2-position		1.3	0.27	1.2	0.22
	3-position	All ports closed	1.1	0.31	1.1	0.27
		ABR connection	1.1	0.31	1.3	0.29
		PAB connection	1.4	0.30	1.1	0.26
3GB2 4GB2	Two 3-port valves integrated		1.7	0.42	2.1	0.26
	2-position		2.6	0.20	2.6	0.19
	3-position	All ports closed	2.3	0.32	2.2	0.22
		ABR connection	2.2	0.23	2.6	0.16
		PAB connection	2.4	0.10	2.4	0.22
4GB3	2-position		4.3	0.24	4.2	0.24
	3-position	All ports closed	3.3	0.40	3.4	0.27
		ABR connection	3.3	0.36	4.2	0.18
		PAB connection	4.5	0.28	3.4	0.30

*1: Effective cross-sectional area S and sonic conductance C are converted as S ≈ 5.0 × C.

Ozone-proof specifications • Coolant proof specifications

Can be selected with "How to order" Item Ⓔ option "A" on page 62.

Clean-room specifications

● Anti-dust generation structure for use in cleanrooms

** - Voltage - **P7***

Specifications for rechargeable battery

(Catalog No. CC-1226A)

● For use in the rechargeable battery manufacturing process, materials used for air path and sliding section are limited

** - Voltage - **P4**

CE marking specifications

** - Voltage - **ST**

- Standard voltage of 24 VDC or less is CE marking-compatible even if the model No. is not indicated with "ST".

How to order

4GB1 1 0 R - 06 - E2 - 3

3GB1 66 0 R - 06 - E2 - 3

Discrete valve for integrated base

4GB1 1 9 R - 00 - E2 H - 3

3-port discrete valve for integrated base

3GB1 66 9 R - 00 - E2 H - 3

- A Model No.
- B Solenoid position
- C Port size
- D Electrical connections
  Refer to page 11 for the circuit diagram with surge suppressor/lamp
- E Option
- F Voltage

Code	Description		A Model No. 3GB1	3GB2	4GB1	4GB2	4GB3
B Solenoid position							
1	2 position single				●	●	●
2	2-position double				●	●	●
3	3-position all ports closed				●	●	●
4	3-position ABR connection				●	●	●
5	3-position PAB connection				●	●	●
66	Two 3-port valves integrated (*1)	A side valve:Normally closed B side valve:Normally closed	●	●			
67	Two 3-port valves integrated (*1)	A side valve:Normally closed B side valve:Normally open	●	●			
76	Two 3-port valves integrated (*1)	A side valve:Normally open B side valve:Normally closed	●	●			
77	Two 3-port valves integrated (*1)	A side valve:Normally open B side valve:Normally open	●	●			
C Port size							
Port	4(A)/2(B) port	P/R1/Port R2 (1/8) = Rc1/8 (1/4) = Rc1/4 (3/8) =Rc3/8					
06	Rc1/8		(2)		(2)		
08	Rc1/4			(3)		(3)	(3)
10	Rc3/8						(4)
Port	4(A)/2(B) port	P/R1/Port R2 (1/8) = 1/8NPT, (1/4) = 1/4NPT, (3/8) = 3/8NPT					
06 N	NPT1/8 (*2)		(5)		(5)		
08 N	NPT1/4 (*2)			(6)		(6)	(6)
10 N	NPT3/8 (*2)						(7)
Port	4(A)/2(B) port	P/R1/Port R2 (1/8) = G1/8, (1/4) = G1/4 (10)=G3/8					
06G	G1/8 (*2)		(8)		(8)		
08G	G1/4 (*2)			(9)		(9)	(9)
10G	G3/8 (*2)						(10)
00	Discrete valve for integrated base		●	●	●	●	●
D Electrical connections							
Blank	Grommet lead wire (300 mm) (*7)		●	●	●	●	●
B	DIN terminal box (Pg 7) With surge suppressor/lamp (*8) (*10)			●		●	●
BN	DIN terminal box (Pg7) (without terminal box) With surge suppressor (*8) (*10)			●		●	●
E-connector (upward/lateral common)							
E0	Lead wire (300 mm) (*9)		●	●	●	●	●
E00	Lead wire (500 mm) (*9)		●	●	●	●	●
E01	Lead wire (1000 mm) (*9)		●	●	●	●	●
E02	Lead wire (2000 mm) (*9)		●	●	●	●	●
E03	Lead wire (3000 mm) (*9)		●	●	●	●	●
E0N	Without lead wire (without socket)(*9)		●	●	●	●	●
E1	Without lead wire (socket/terminal attached)(*9)		●	●	●	●	●
E2	Lead wire (300 mm) with surge suppressor and indicator lamp		●	●	●	●	●
E20	Lead wire (500 mm) with surge suppressor and indicator lamp		●	●	●	●	●
E21	Lead wire (1000 mm) with surge suppressor and indicator lamp		●	●	●	●	●
E22	Lead wire (2000 mm) with surge suppressor and indicator lamp		●	●	●	●	●
E23	Lead wire (3000 mm) with surge suppressor and indicator lamp		●	●	●	●	●
E2N	Without lead wire (without socket) with surge suppressor and indicator lamp		●	●	●	●	●
E3	Without lead wire (socket/terminal attached) with surge suppressor and indicator lamp		●	●	●	●	●
EJ-connector (socket with cover, upward/lateral common)							
E01J	Lead wire (1000 mm) (*9)		●	●	●	●	●
E02J	Lead wire (2000 mm) (*9)		●	●	●	●	●
E03J	Lead wire (3000 mm) (*9)		●	●	●	●	●
E21J	Lead wire (1000 mm) with surge suppressor and indicator lamp		●	●	●	●	●
E22J	Lead wire (2000 mm) with surge suppressor and indicator lamp		●	●	●	●	●
E23J	Lead wire (3000 mm) with surge suppressor and indicator lamp		●	●	●	●	●
E Option							
Blank	Manual override of non-locking/locking common		●	●	●	●	●
M	Manual override of non-locking		●	●	●	●	●
H	With exhaust check valve (*3)		●	●	●	●	●
K	External pilot				●	●	●
A	Ozone/coolant proof		●	●	●	●	●
S	Surgeless (*4)		●	●	●	●	●
E	Low exoergic/energy saving circuit (*4), (*5)		●	●	●	●	●
F	Port A/B filter built in (*6)		●	●	●	●	●
X	Non-locking residual pressure exhaust structure (*11)				●	●	
X1	Locking residual pressure exhaust structure (*11)				●	●	
F Voltage							
1	100 VAC (rectifier integrated)		●	●	●	●	●
2	200 VAC (rectifier integrated)		●	●	●	●	●
3	24 VDC		●	●	●	●	●
4	12 VDC		●	●	●	●	●
7	3 VDC		○	○	○	○	○
8	5 VDC		○	○	○	○	○

Precautions for model No. selection

*1: Not compatible when combined with external pilot (K). Dimensions are the same as those of the respective 2-position double solenoid.

*2: Made to order.

***3 3-position all ports closed and PAB connection are not provided with the exhaust check valve. Refer to page 851 for details on the exhaust check valve.**

4: E2 type and E2*J type connectors support 12/24 VDC only. In addition, surgeless "S" and low exoergic/energy-saving circuit "E" cannot be selected together.

*5: Surgeless specifications.

*6: A filter is built into port P as standard.

*7: The grommet lead wire specifications are compatible with DC voltage only.

*8: AC voltage and 12, 24 VDC are supported. In addition, a lamp comes with the terminal box.

*9: AC voltage is with a rectifier circuit.

*10: The terminal box conforms to EN175301-803 Type C (former DIN 43650-C). Refer to pages 856 and 857 for details.

*11: Compatible only with 4GB1 and 4GB2 (R) solenoid positions 3 or 4.

is not available.

○ indicates made to order.

Electrical connections

Discrete valve/individual wiring manifold

Blank Grommet lead wire

● **Lead wire length**
300 mm

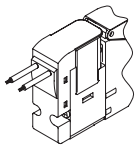

E1 E3 E-connector with socket/terminal

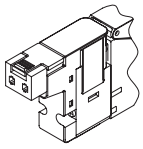

E0 E2 E-connector

● **Lead wire length**
300 mm
500 mm
1000 mm
2000 mm
3000 mm

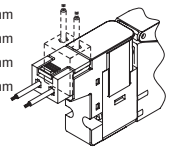

B DIN terminal box

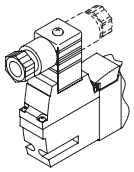

E0N E2N E-connector without socket

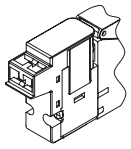

BN DIN terminal box without terminal box

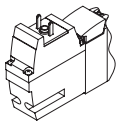

E0*J E2*J EJ type connector

● **Lead wire length**
1 m
2 m
3 m

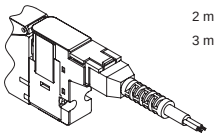

Internal structure and parts list

3GB1660R, 1670R, 1760R, 1770R

● Two 3-port valves integrated
Grommet lead wire (blank)

Refer to page 66.

4GB110R

● 2-position single
Grommet lead wire (blank)

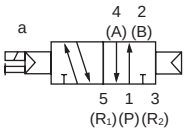

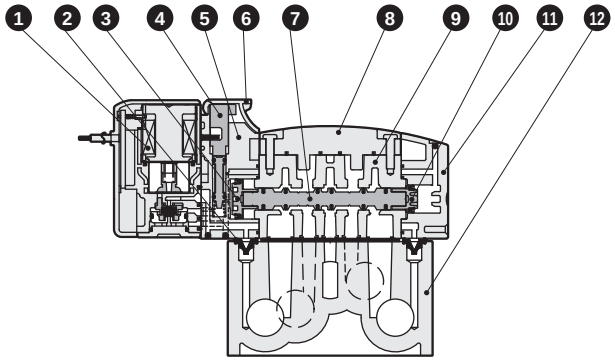

5(R1) 4(A) 1(P) 2(B) 3(R2)

4GB120R

● 2-position double
Grommet lead wire (blank)

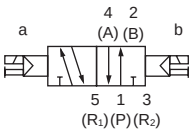

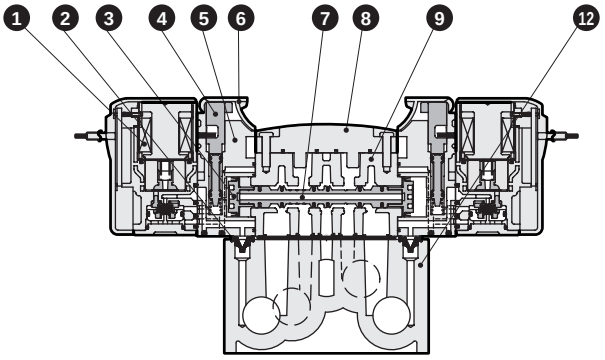

5(R1) 4(A) 1(P) 2(B) 3(R2)

4GB1 $^{3}_{4}_{5}$ 0R

● 3-position
Grommet lead wire (blank)

All ports closed

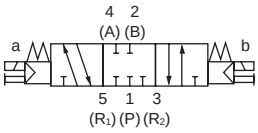

A/B/R connection

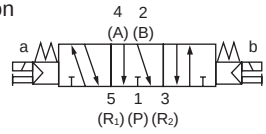

P/A/B connection

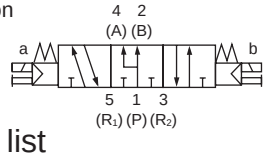

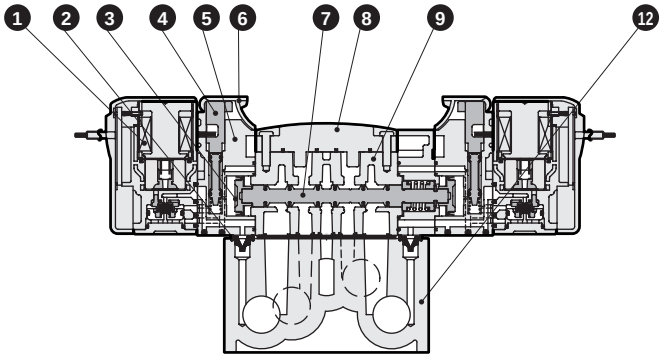

5(R1) 4(A) 1(P) 2(B) 3(R2)

Main parts list

No.	Part name	Material
1	Coil assembly	-
2	Pilot exhaust check valve	Hydrogenated nitrile rubber
3	Piston D assembly	-
4	Manual override	Resin
5	Piston chamber	Resin
6	Manual protection cover	Resin
7	Spool assembly	-
8	Plate	Resin
9	Body	Aluminum alloy die-casting
10	Piston S assembly	-
11	Cap	Resin
12	Discrete sub-plate	Aluminum alloy die-casting

Parts list

No.	Part name	Model No.
1	Coil assembly	4GR - electrical connections - □ - COIL - voltage Blank: Standard A: Ozone specification S: Surgeless E: Low exoergic/ energy saving circuit K: External pilot Blank: Grommet lead wire

Internal structure and parts list

3GB2660R, 2670R, 2760R, 2770R

● Two 3-port valves integrated
Grommet lead wire (blank)

Refer to page 66.

4GB210R/4GB310R

● 2-position single
Grommet lead wire (blank)

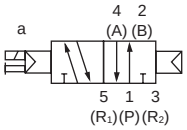

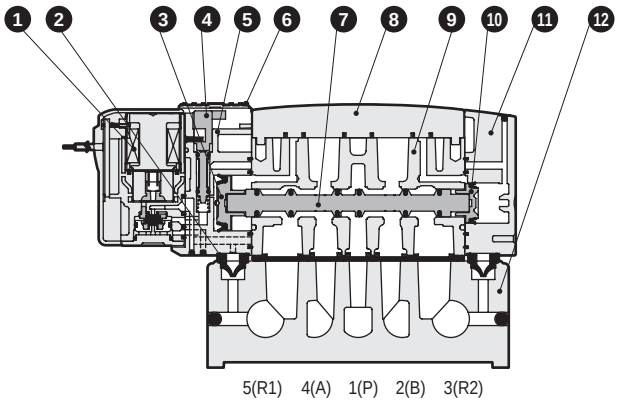

4GB220R/4GB320R

● 2-position double
Grommet lead wire (blank)

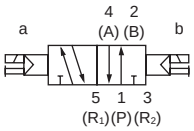

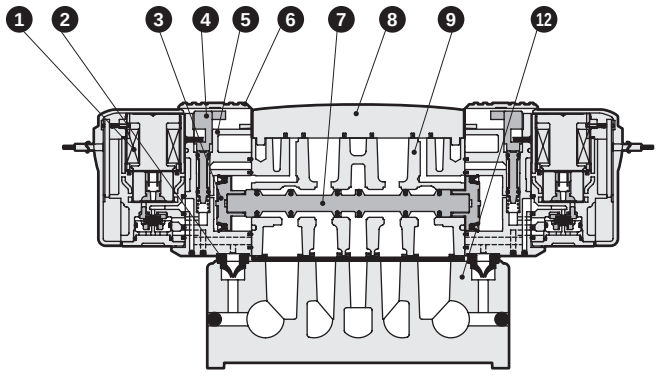

4GB2$^{3}_{4}_{5}$0R/4GB3$^{3}_{4}_{5}$0R

● 3-position
Grommet lead wire (blank)

All ports closed

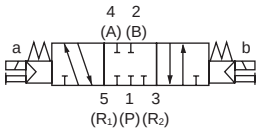

A/B/R connection

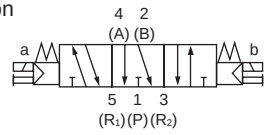

P/A/B connection

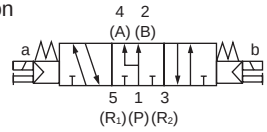

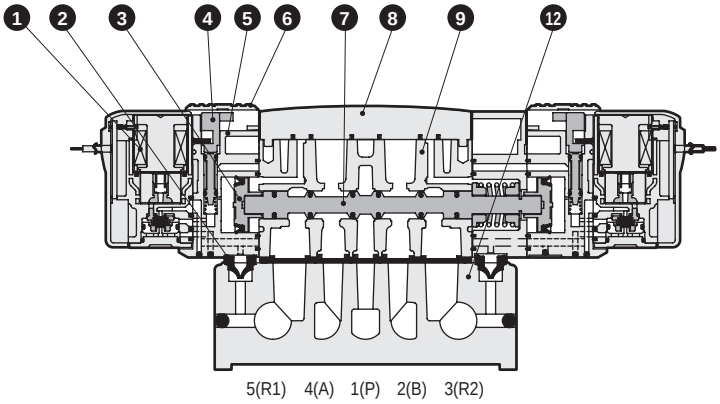

Main parts list

No.	Part name	Material
1	Coil assembly	-
2	Pilot exhaust check valve	Hydrogenated nitrile rubber
3	Piston D assembly	-
4	Manual override	Resin
5	Piston chamber	Resin
6	Manual protection cover	Resin
7	Spool assembly	-
8	Plate	Resin
9	Body	Aluminum alloy die-casting
10	Piston S assembly	-
11	Cap	Resin
12	Discrete sub-plate	Aluminum alloy die-casting

Parts list

No.	Part name	Model No.
1	Coil assembly	4GR - electrical connections - □ - COIL - voltage □: Blank: Standard, A: Ozone specifications, S: Surgeless, E: Low exoergic/energy saving circuit, K: External pilot electrical connections: Blank: Grommet lead wire

Internal structure and parts list

3GB1 $^{66}_{67}{}^{}_{76}{}^{}_{77}$ 0R

● Two 3-port valves integrated
Grommet lead wire (blank)

A side valve: Normally closed,
B side valve: Normally closed
NC/NC

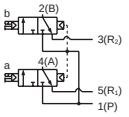

A side valve: Normally closed,
B side valve: Normally open
NC/NO

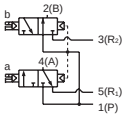

A side valve: Normally open,
B side valve: Normally closed
NO/NC

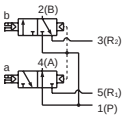

A side valve: Normally open,
B side valve: Normally open
NO/NO

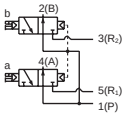

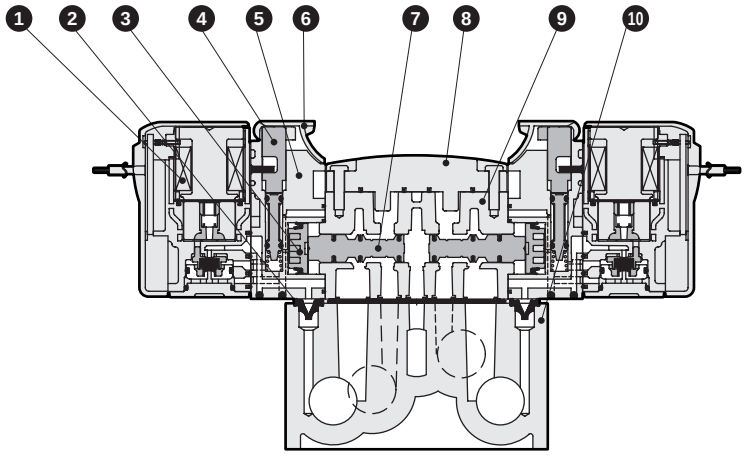

3GB2 $^{66}_{67}{}^{}_{76}{}^{}_{77}$ 0R

● Two 3-port valves integrated
Grommet lead wire (blank)

A side valve: Normally closed,
B side valve: Normally closed
NC/NC

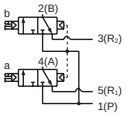

A side valve: Normally closed,
B side valve: Normally open
NC/NO

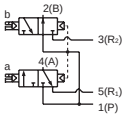

A side valve: Normally open,
B side valve: Normally closed
NO/NC

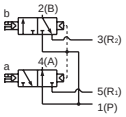

A side valve: Normally open,
B side valve: Normally open
NO/NO

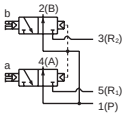

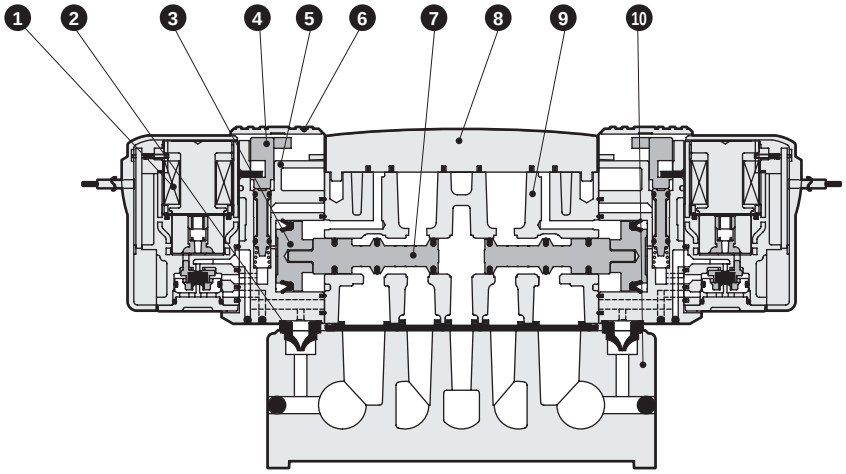

Main parts list

No.	Part name	Material
1	Coil assembly	-
2	Pilot exhaust check valve	Hydrogenated nitrile rubber
3	Piston assembly	-
4	Manual override	Resin
5	Piston chamber	Resin
6	Manual protection cover	Resin
7	Spool assembly	-
8	Plate	Resin
9	Body	Aluminum alloy die-casting
10	Discrete sub-plate	Aluminum alloy die-casting

Parts list

No.	Part name	Model No.
1	Coil assembly	4GR - electrical connections - □ - COIL - voltage Blank: Standard A: Ozone specification S: Surgeless E: Low exoergic/ energy saving circuit K: External pilot Blank: Grommet lead wire

Electrical connections internal structure and parts list

● E-connector E □□

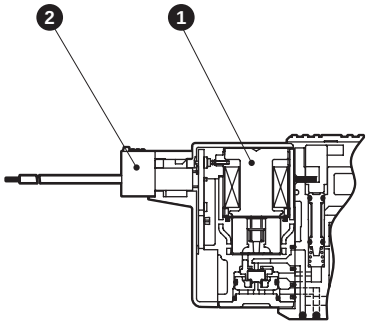

● EJ type connector E □□ J

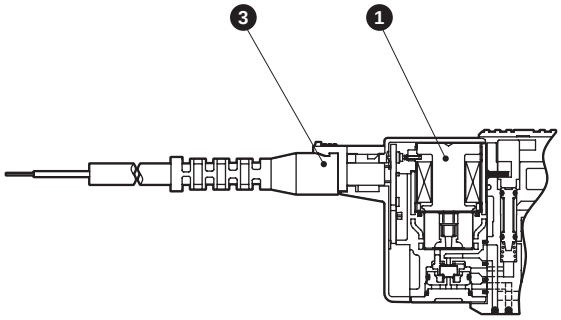

● DIN terminal box B

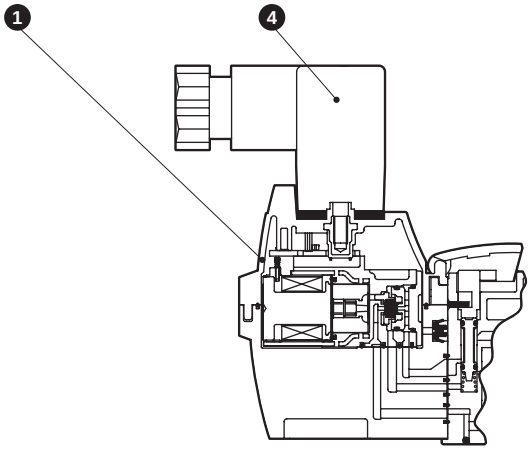

Main parts list

No.	Part name	Material
1	Coil assembly	
2	E-connector socket assembly	-
3	Socket assembly with cover	-
4	DIN terminal box assembly	-

Parts list

No.	Part name	Model No.
1	Coil assembly	4GR - electrical connections - □ - COIL - voltage Blank: Standard A: Ozone specification S: Surgeless E: Low exoergic/ energy saving circuit K: External pilot E*: E-connector E*J: Socket with cover type B: DIN terminal box B includes the DIN terminal box BN does not include the DIN terminal box
2	E-connector socket assembly	4GR-SOCKET-ASSY-E**-Voltage
3	Socket assembly with cover	4GR-SOCKET-ASSY-E**J
4	DIN terminal box assembly	4GR-TERMINAL-BOX-Voltage

Dimensions CAD

4GB110R * NPT thread and G thread specifications are listed on pages 86 to 95.

● 2-position single grommet lead wire (blank)

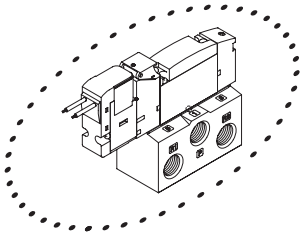

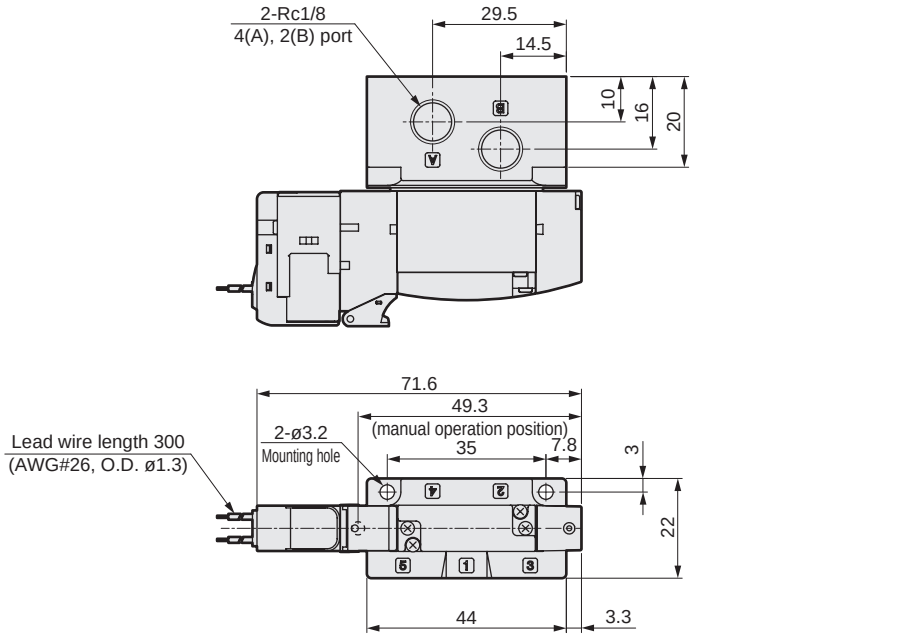

● External pilot (K)

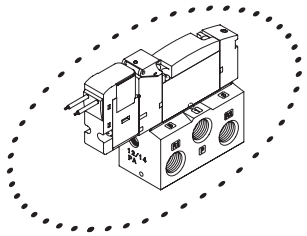

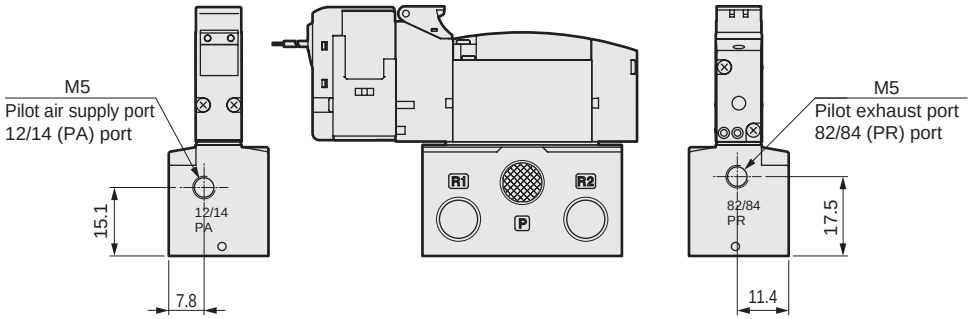

Dimensions

● E-connector (E)

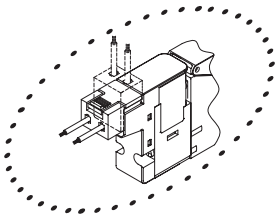

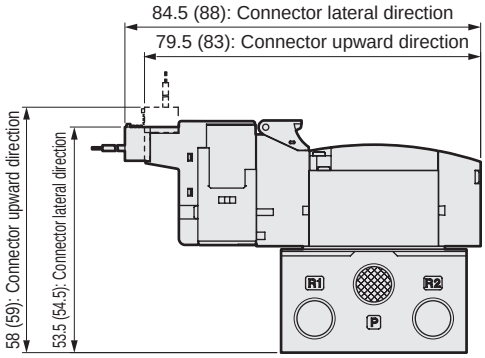

Note: Values in ( ) are for AC voltage.

● EJ type connector (E**J)

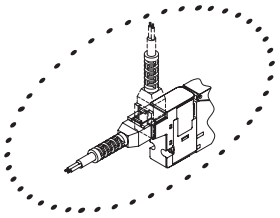

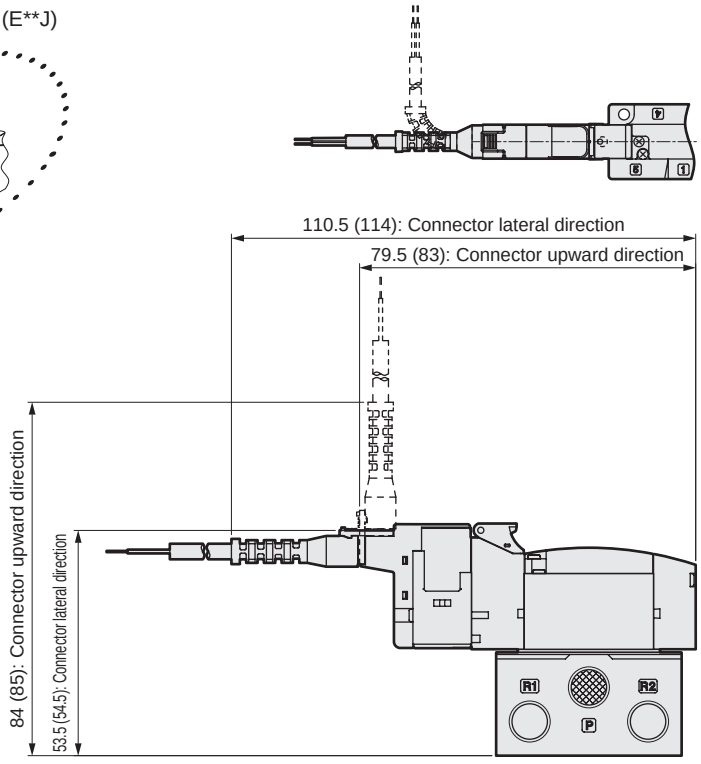

Note: Values in ( ) are for AC voltage.

Dimensions CAD

4GB120R * NPT thread and G thread specifications are listed on pages 86 to 95.

● 2-position double grommet lead wire (blank)

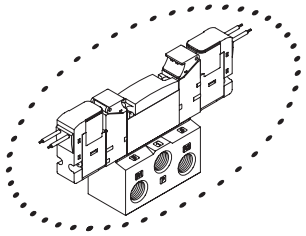

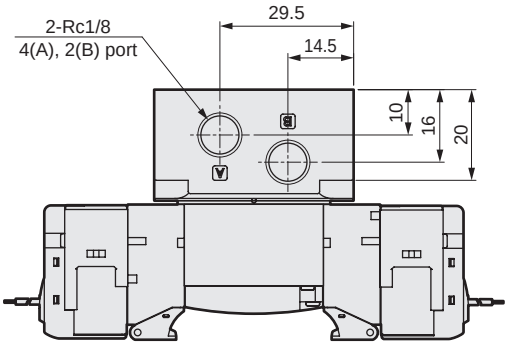

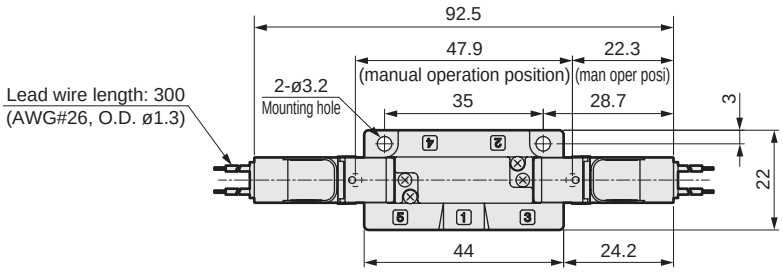

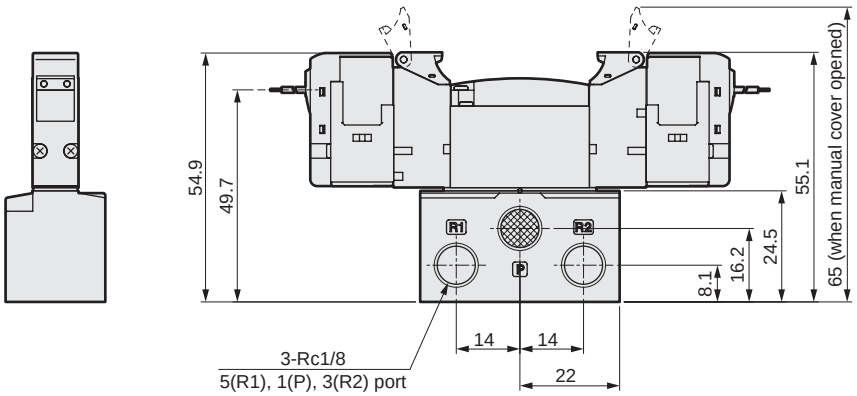

3GB1660R/3GB1670R/3GB1760R/3GB1770R

● Two 3-port valves integrated grommet lead wire (blank)

● External pilot (K)

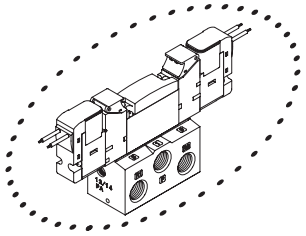

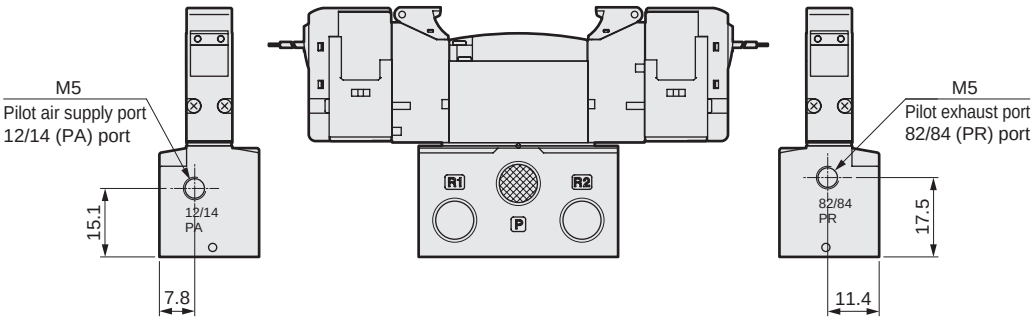

Note: Combination of the two 3-port valves integrated and external pilot is not available.

Dimensions

● E-connector (E)

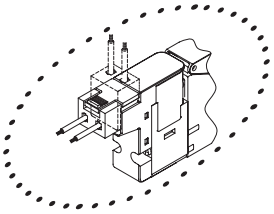

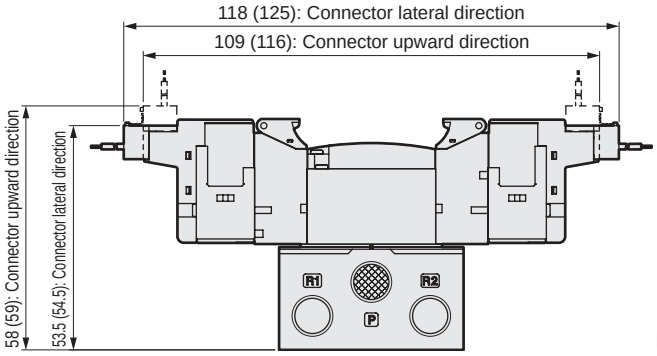

Note: Values in ( ) are for AC voltage.

● EJ type connector (E**J)

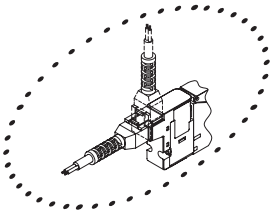

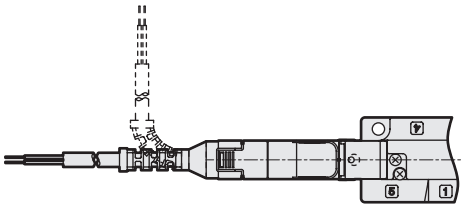

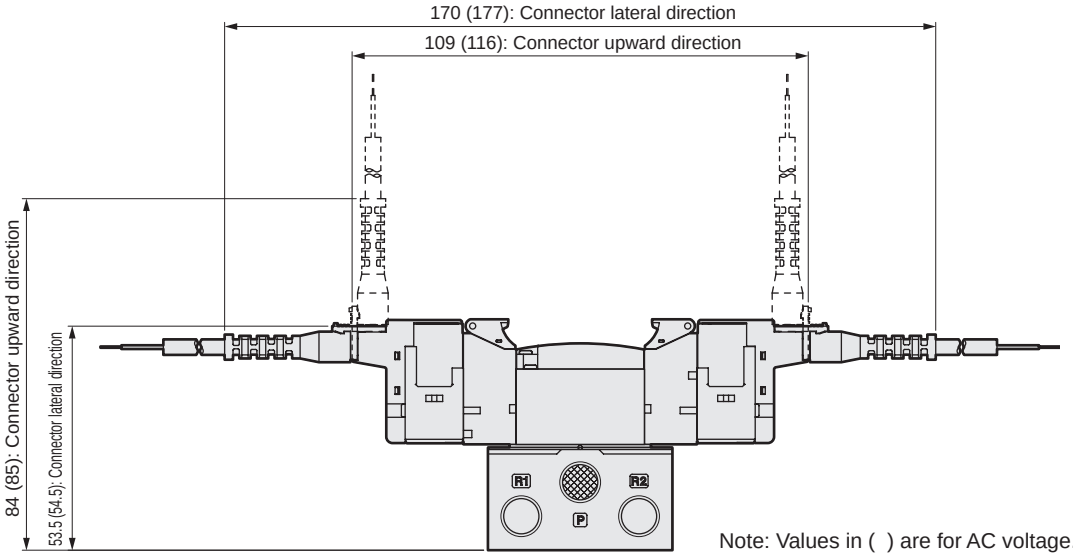

Note: Values in ( ) are for AC voltage.

Dimensions CAD

4GB1 $^{3}_{4}$ $_{5}$ 0R * NPT thread and G thread specifications are listed on pages 86 to 95.

● 3-position grommet lead wire (blank)

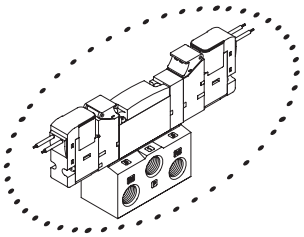

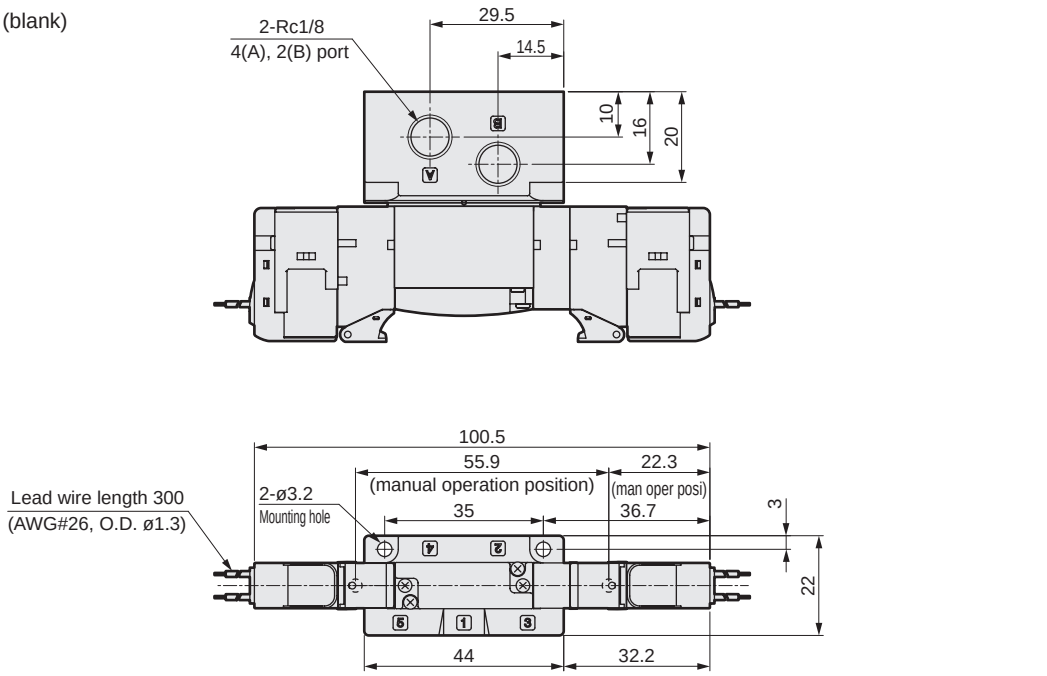

● External pilot (K)

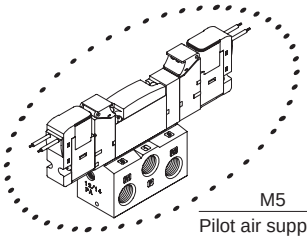

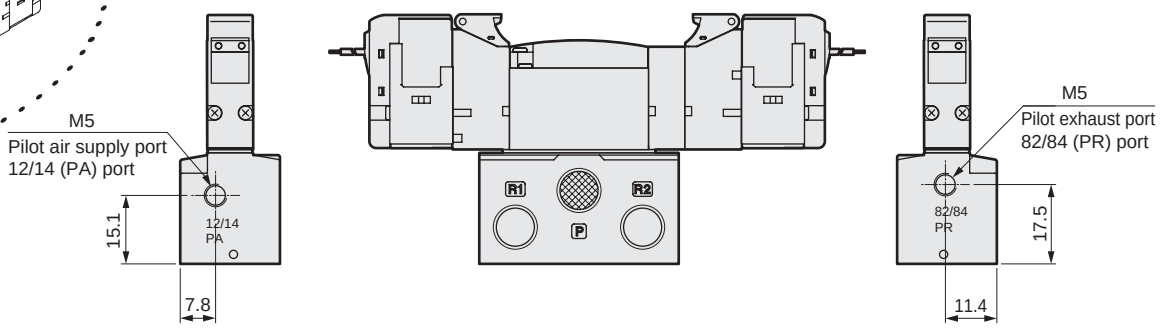

Dimensions

● E-connector (E)

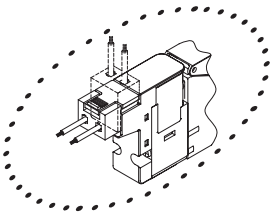

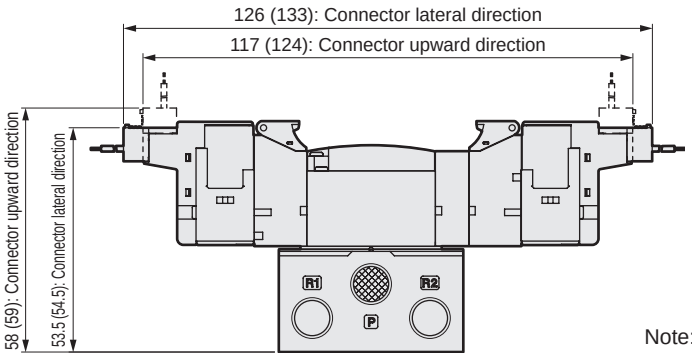

Note: Values in ( ) are for AC voltage.

● EJ type connector (E**J)

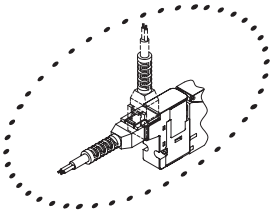

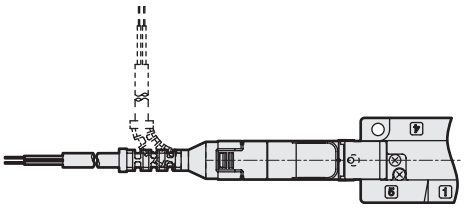

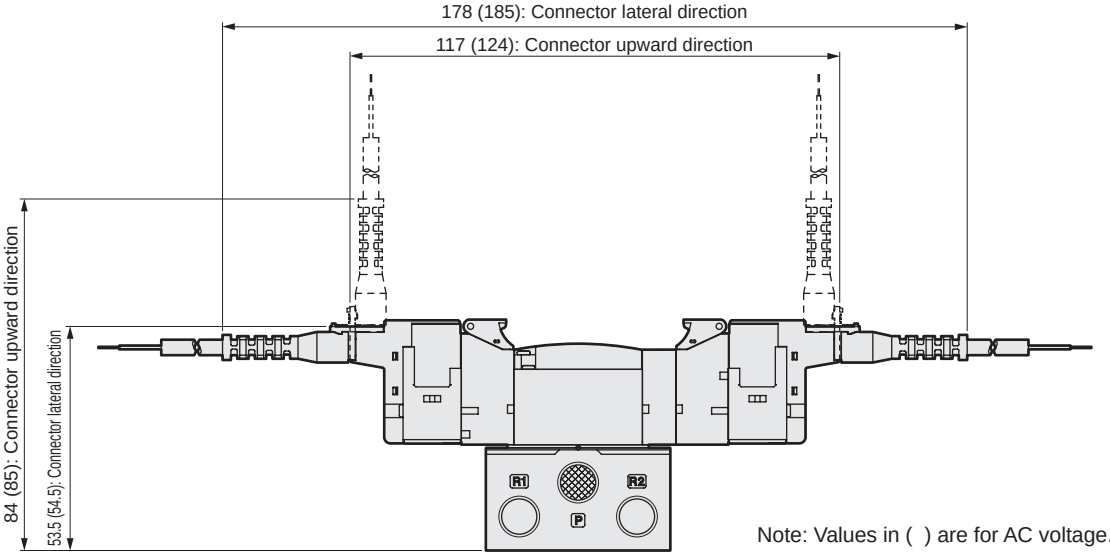

Note: Values in ( ) are for AC voltage.

● Residual pressure exhaust mechanism (X, X1)

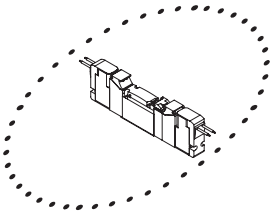

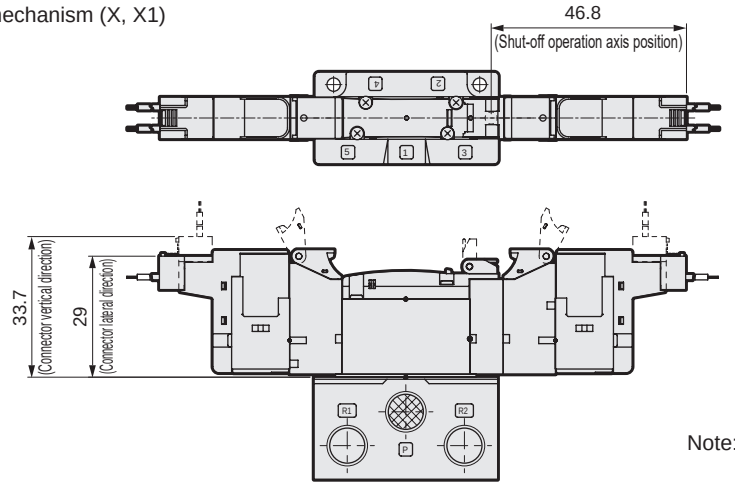

Note: This option is compatible only with 4GB130R and 4GB140R.

Dimensions CAD

4GB210R * NPT thread and G thread specifications are listed on pages 86 to 95.

● 2-position single grommet lead wire (blank)

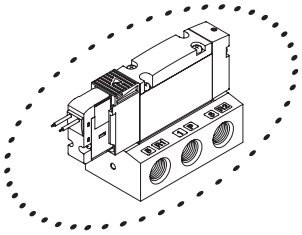

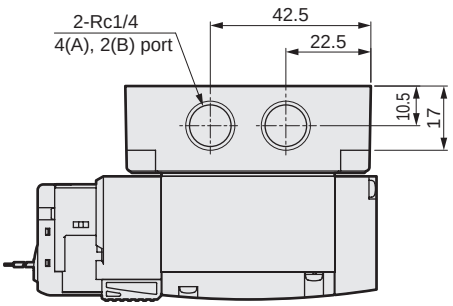

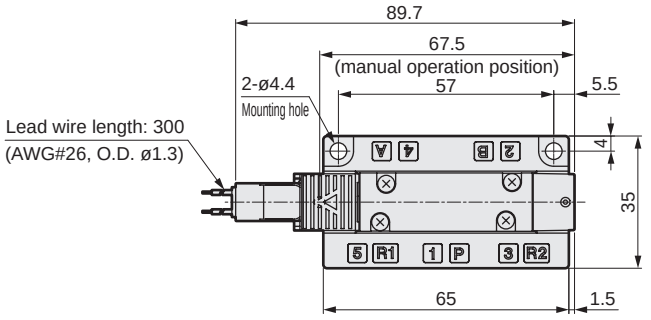

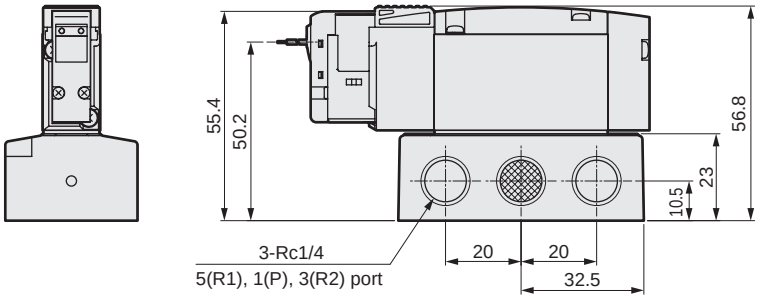

● External pilot (K)

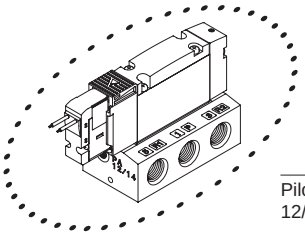

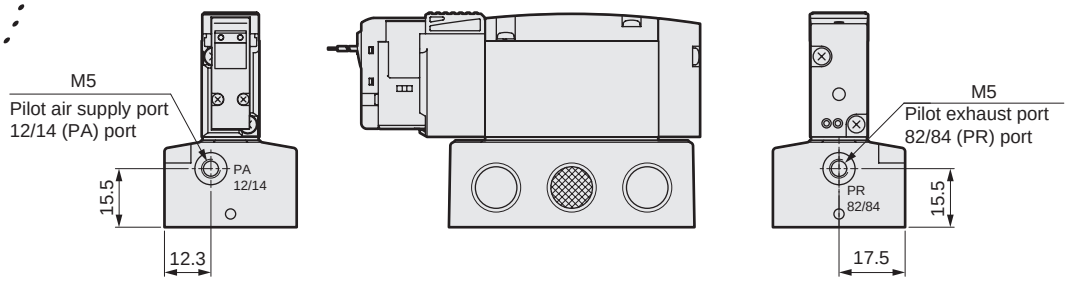

Dimensions

● E-connector (E)

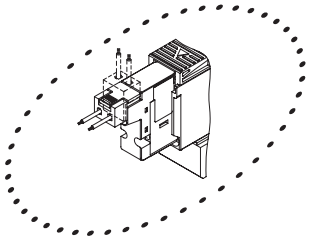

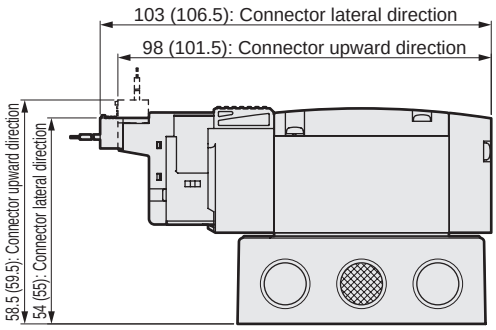

Note: Values in ( ) are for AC voltage.

● EJ type connector (E**J)

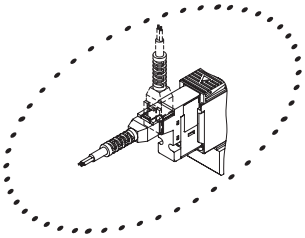

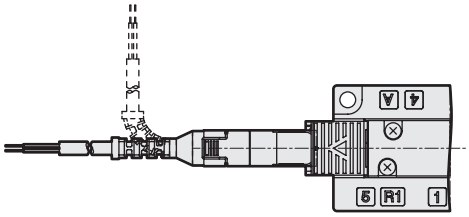

Note: Values in ( ) are for AC voltage.

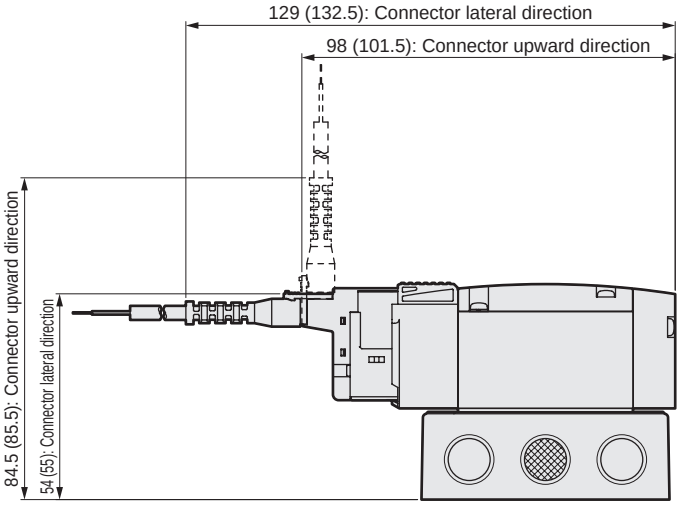

● DIN terminal box (B)

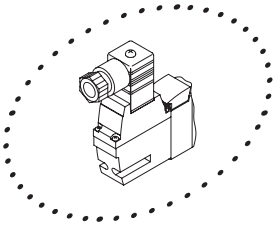

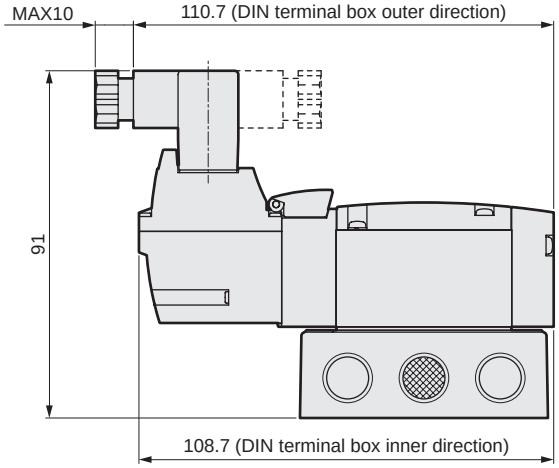

Note: DIN terminal box assembly is shipped facing inward.

Dimensions CAD

4GB220R * NPT thread and G thread specifications are listed on pages 86 to 95.

● 2-position double grommet lead wire (blank)

3GB2660R/3GB2670R/3GB2760R/3GB2770R

● Two 3-port valves integrated grommet lead wire (blank)

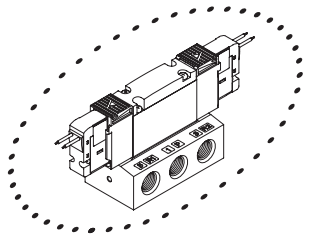

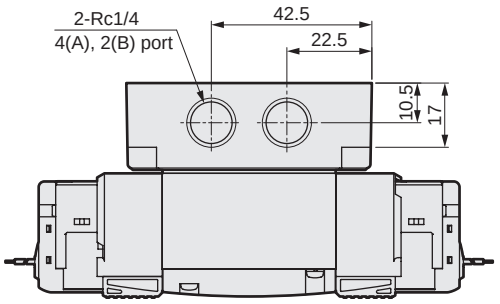

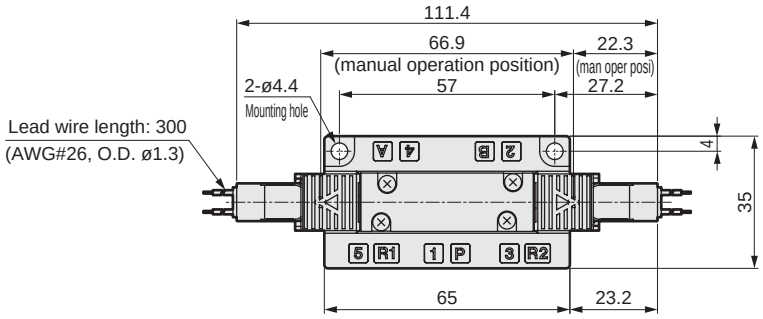

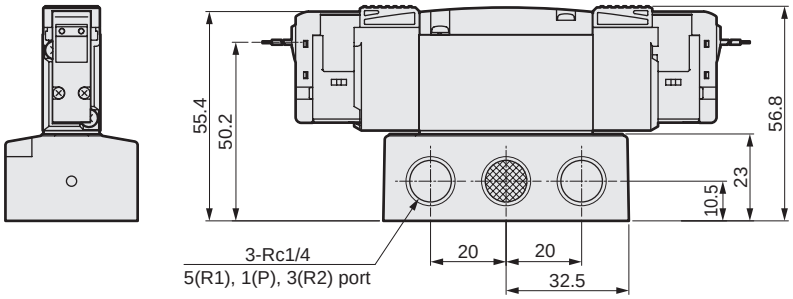

● External pilot (K)

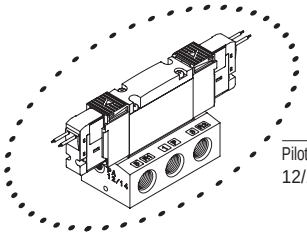

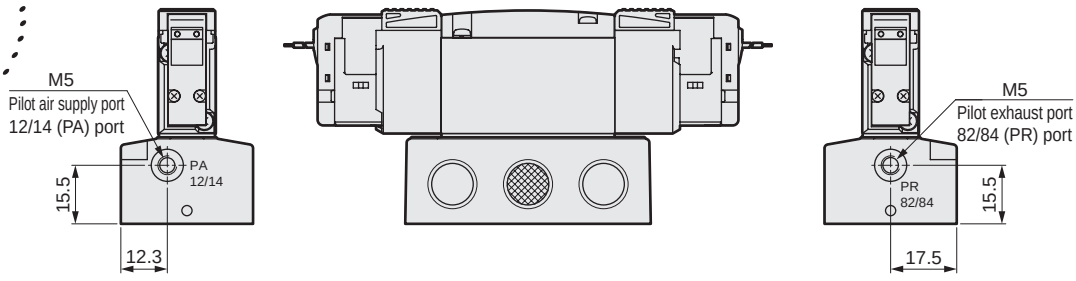

Note: Combination of the two 3-port valves integrated and external pilot is not available.

Dimensions

● E-connector (E)

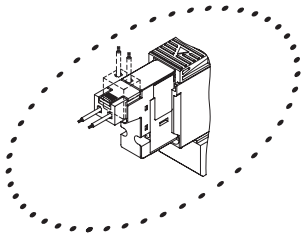

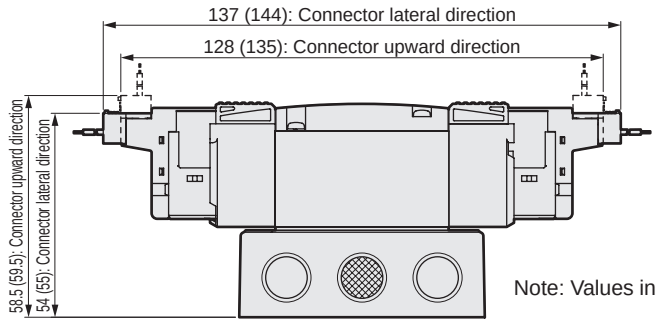

Note: Values in ( ) are for AC voltage.

● EJ type connector (E**J)

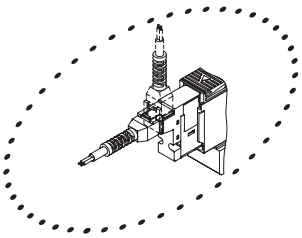

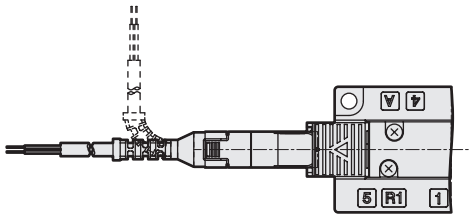

Note: Values in ( ) are for AC voltage.

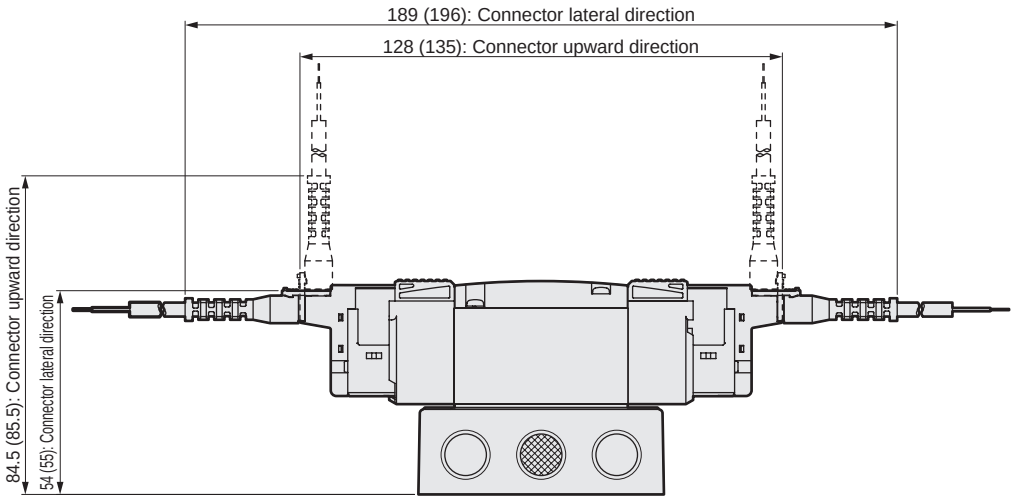

● DIN terminal box (B)

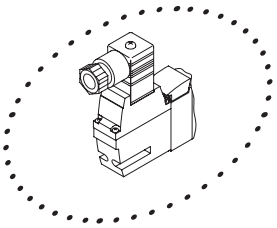

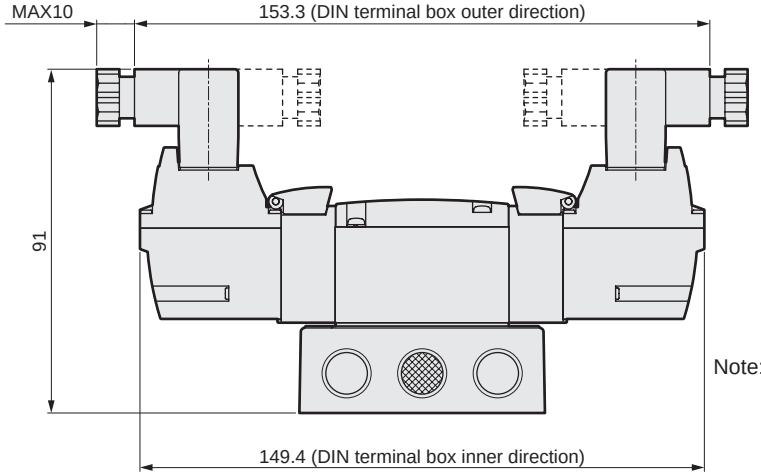

Note: DIN terminal box assembly is shipped facing inward.

Dimensions CAD

4GB2 $^{3}_{4}_{5}$ 0R * NPT thread and G thread specifications are listed on pages 86 to 95.

● 3-position grommet lead wire (blank)

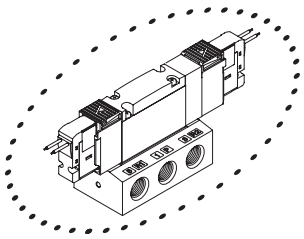

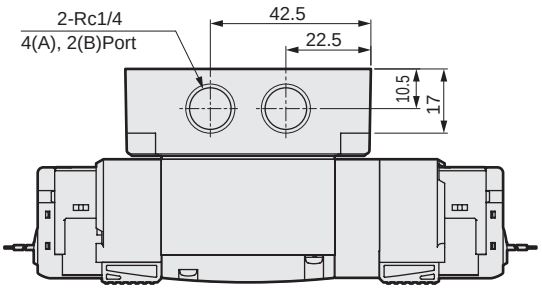

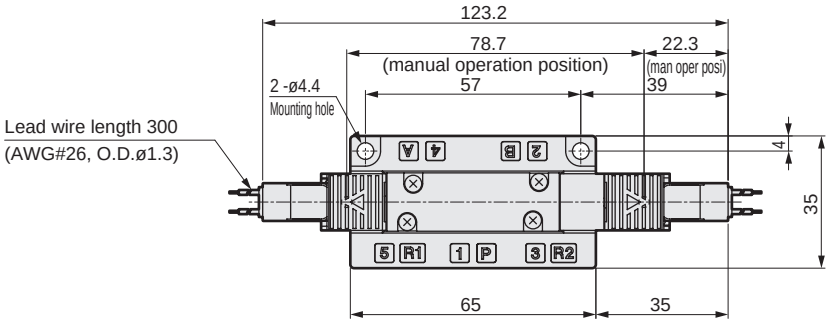

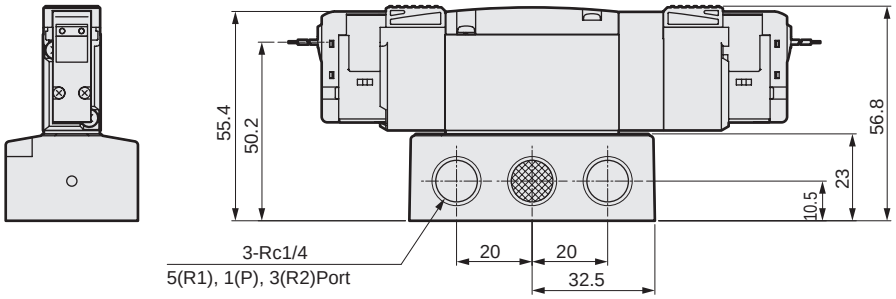

● External pilot (K)

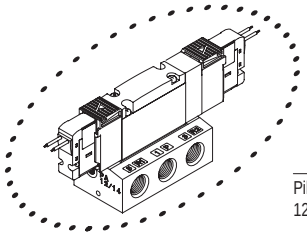

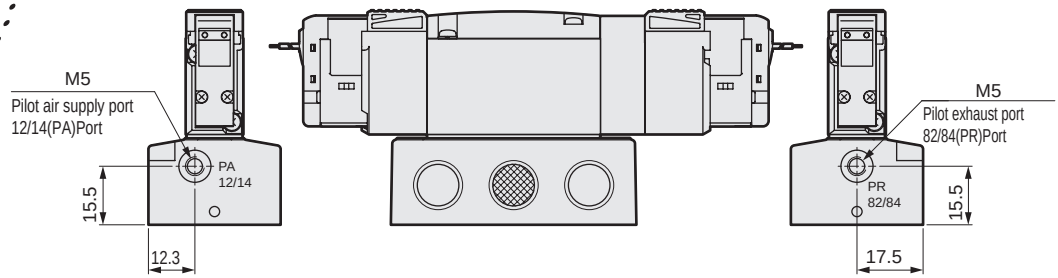

Dimensions

● E-connector (E)

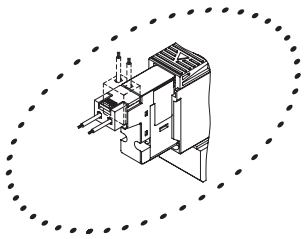

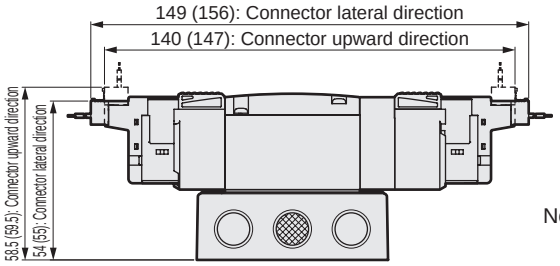

Note: Values in ( ) are for AC voltage.

● EJ type connector (E**J)

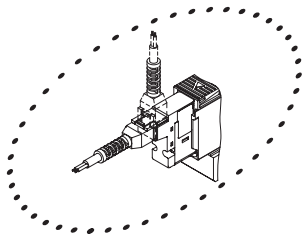

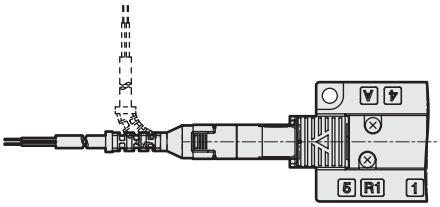

Note: Values in ( ) are for AC voltage.

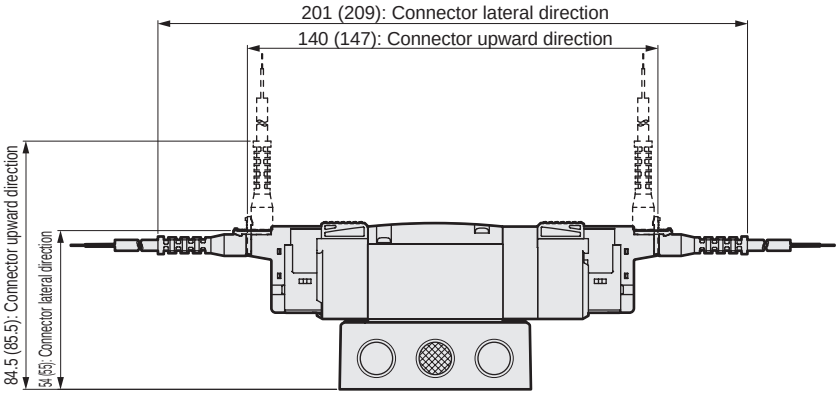

● DIN terminal box (B)

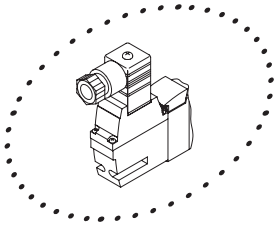

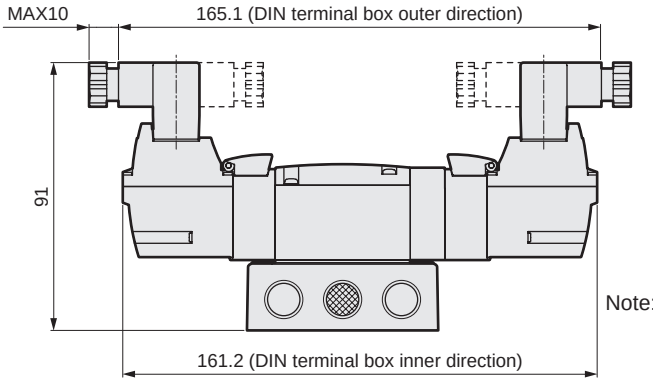

Note: DIN terminal box assembly is shipped facing inward.

● Residual pressure exhaust mechanism (X, X1)

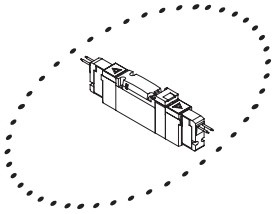

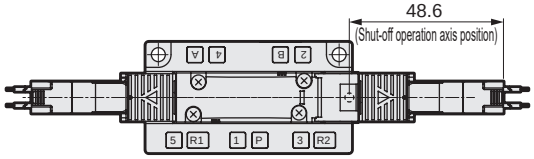

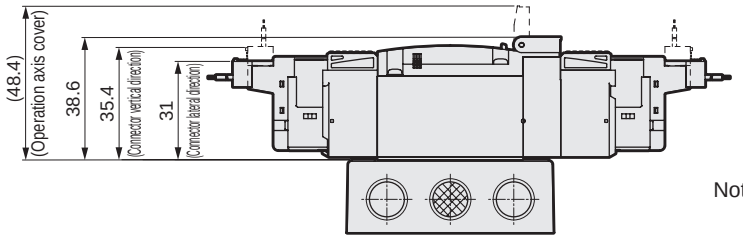

Note: This option is compatible only with 4GB230R and 4GB240R.

Dimensions CAD

4GB310R * NPT thread and G thread specifications are listed on pages 86 to 95.

● 2-position single grommet lead wire (blank)

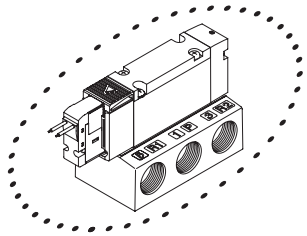

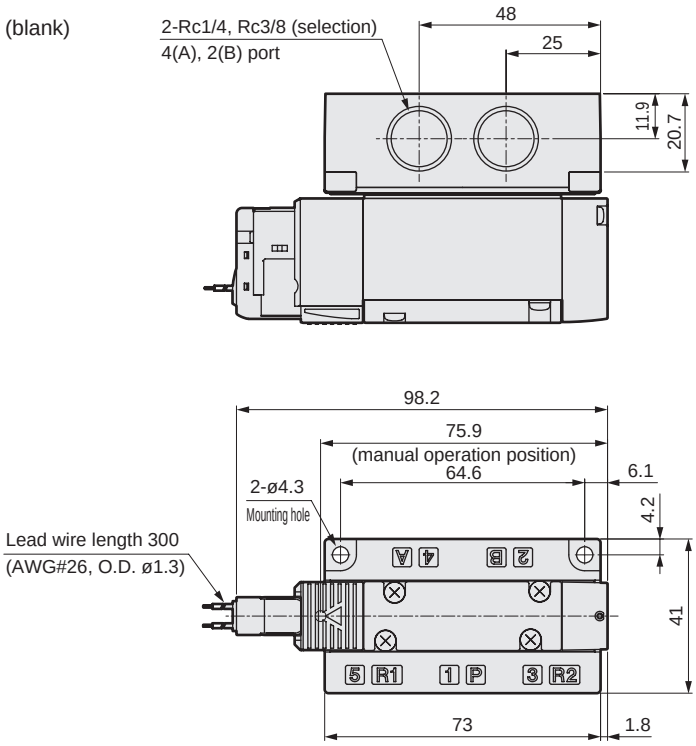

● External pilot (K)

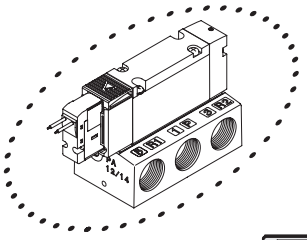

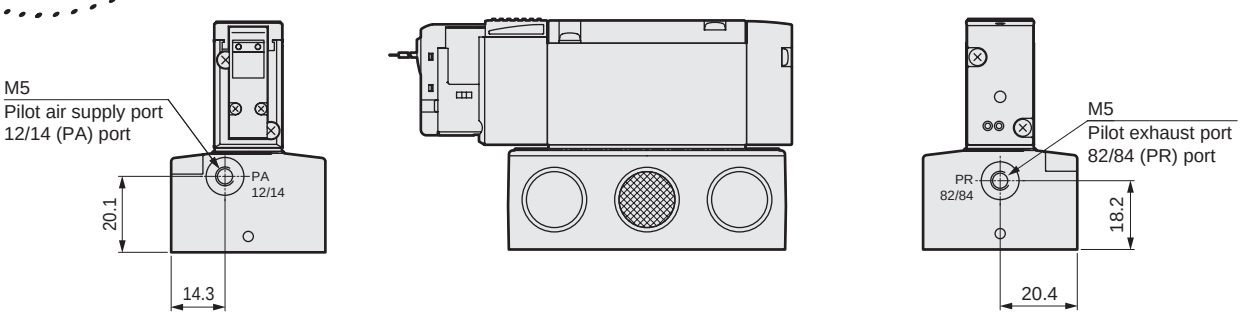

Dimensions

● E-connector (E)

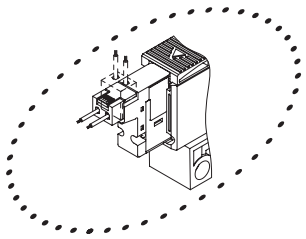

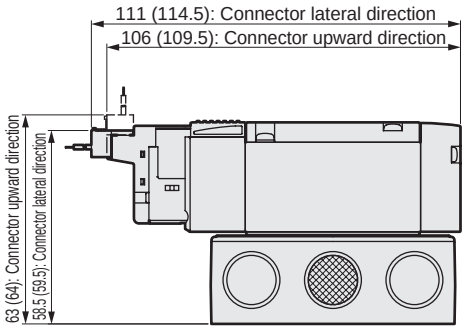

Note: Values in ( ) are for AC voltage.

● EJ type connector (E**J)

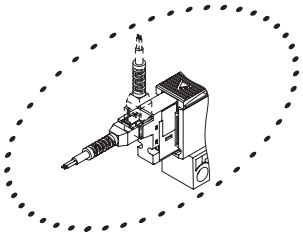

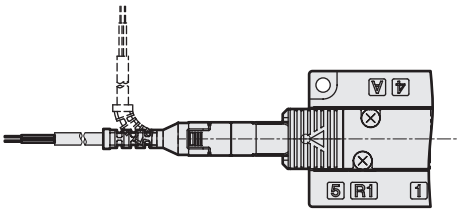

Note: Values in ( ) are for AC voltage.

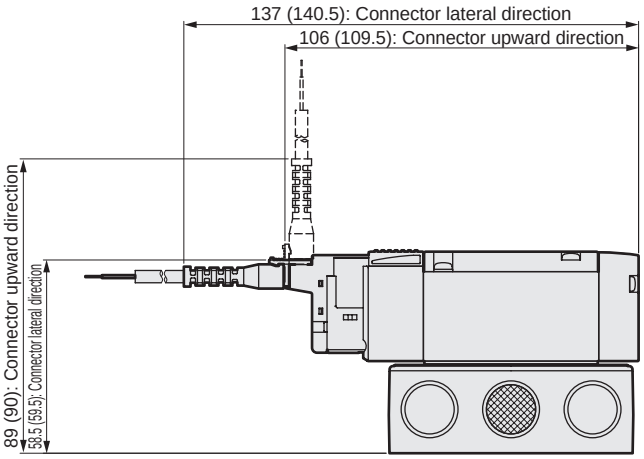

● DIN terminal box (B)

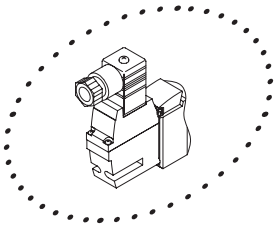

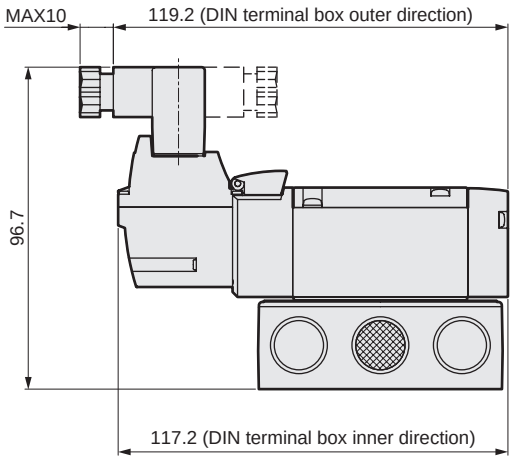

Note: DIN terminal box assembly is shipped facing inward.

Dimensions CAD

4GB320R * NPT thread and G thread specifications are listed on pages 86 to 95.

● 2-position double grommet lead wire (blank)

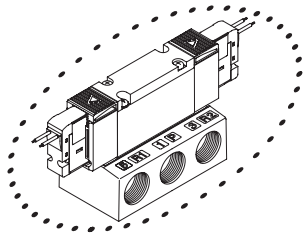

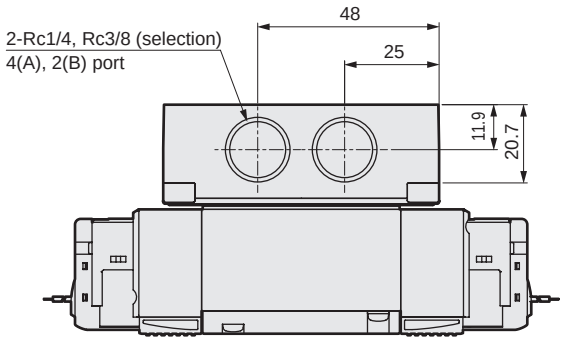

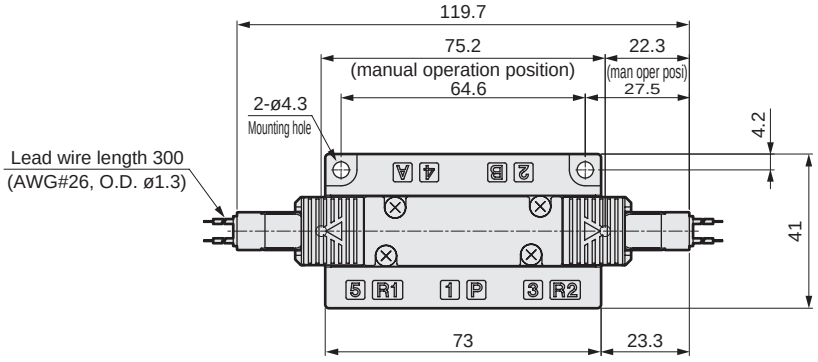

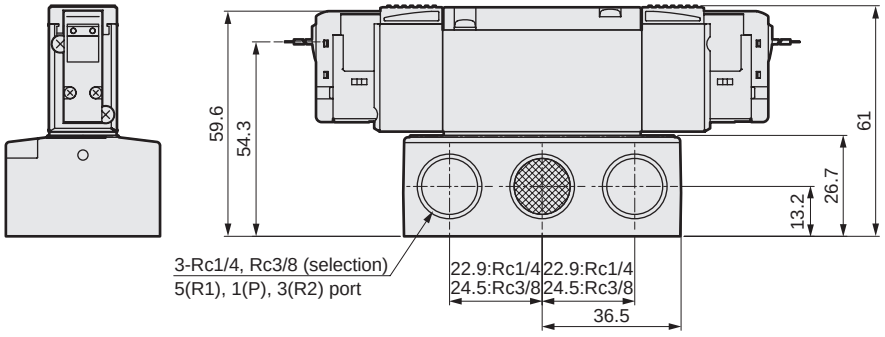

● External pilot (K)

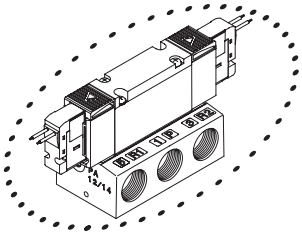

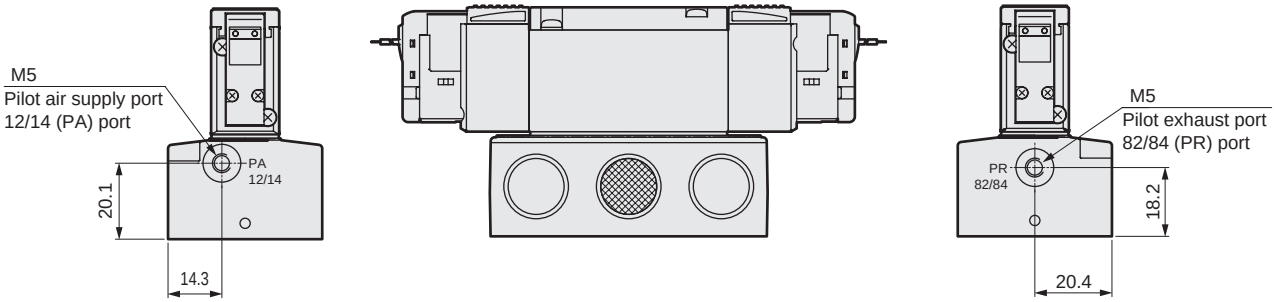

Dimensions

● E-connector (E)

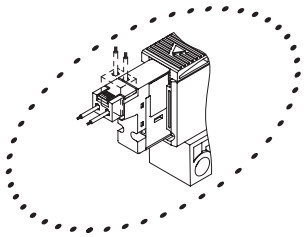

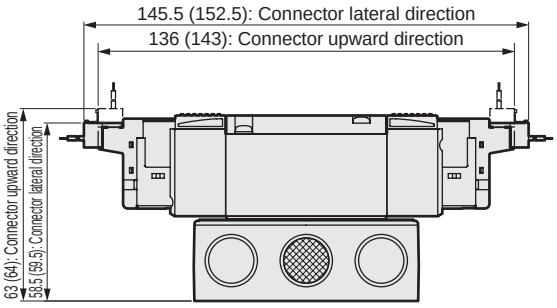

Note: Values in ( ) are for AC voltage.

● EJ type connector (E**J)

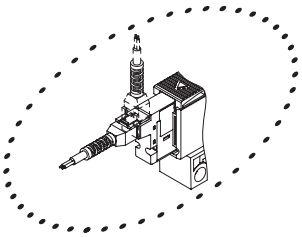

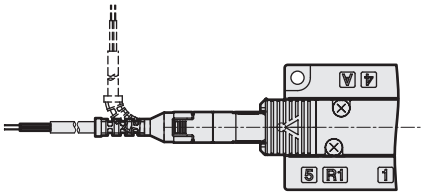

Note: Values in ( ) are for AC voltage.

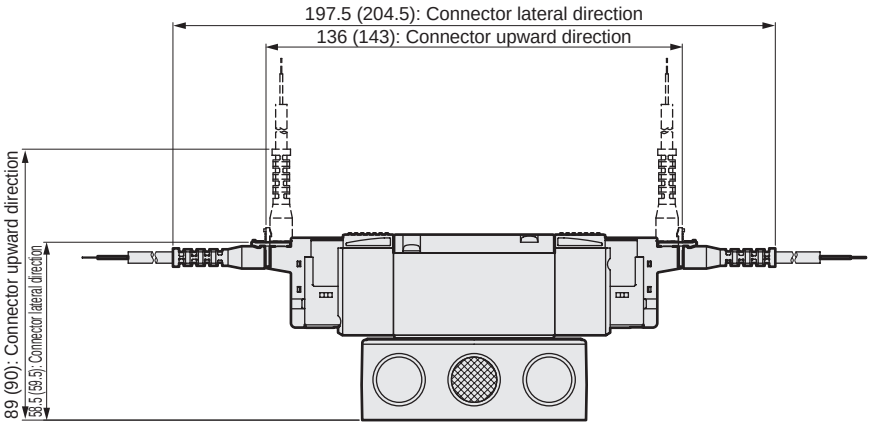

● DIN terminal box (B)

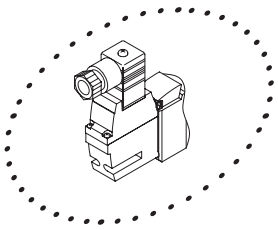

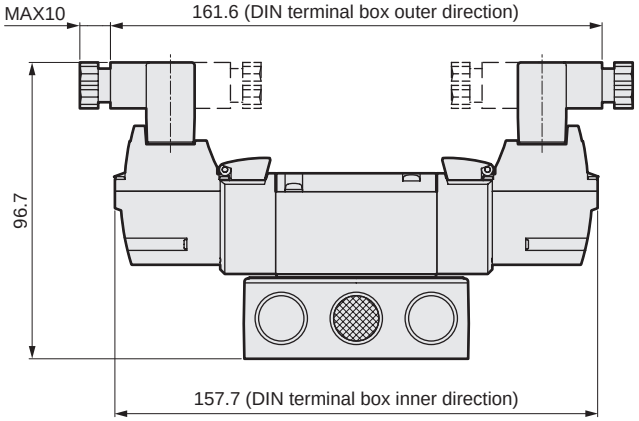

Note: DIN terminal box assembly is shipped facing inward.

Dimensions CAD

4GB3 $^{3}_{4}$ 0R * NPT thread and G thread specifications are listed on pages 86 to 95.

● 3-position, grommet lead wire (blank)

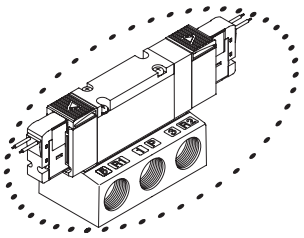

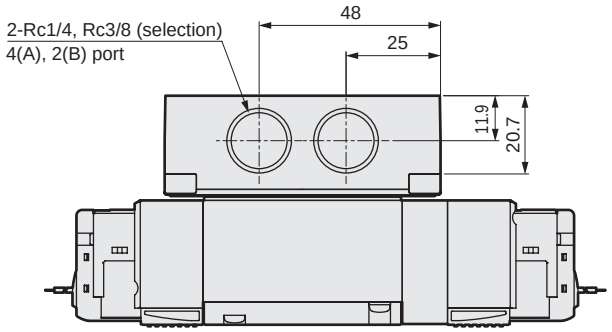

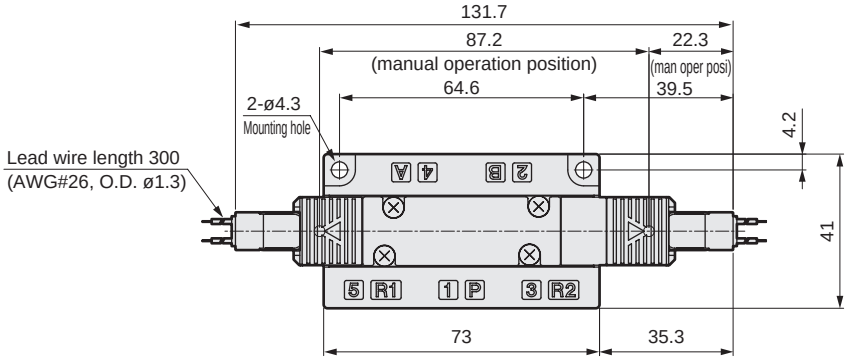

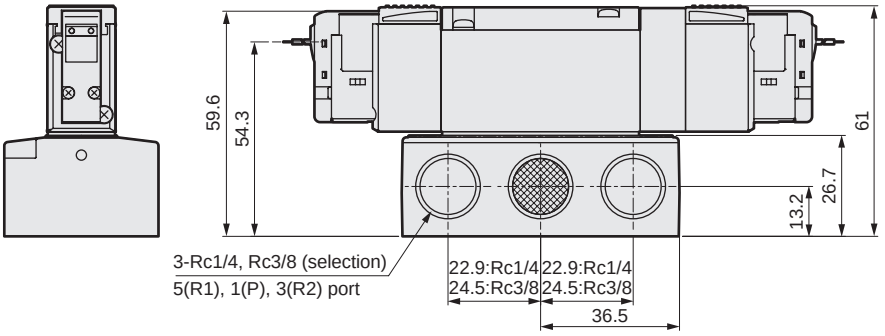

● External pilot (K)

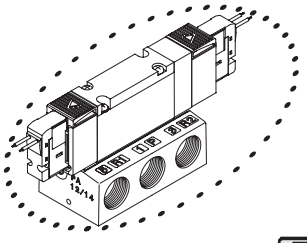

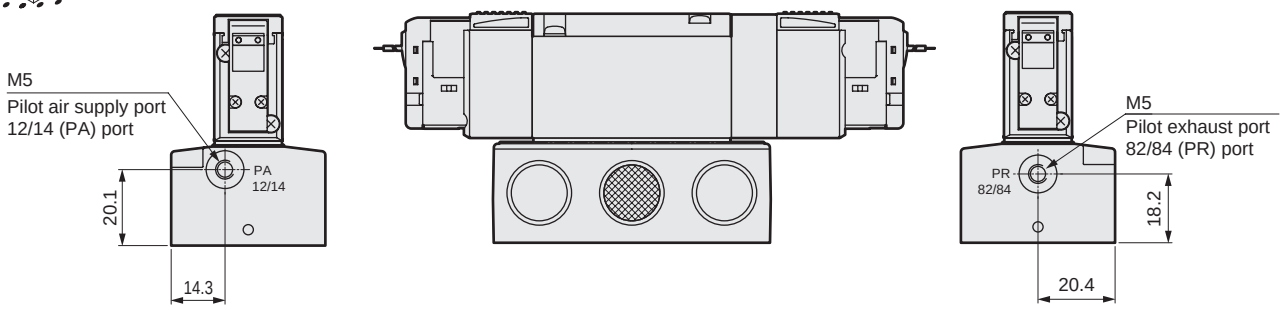

Dimensions

● E-connector (E)

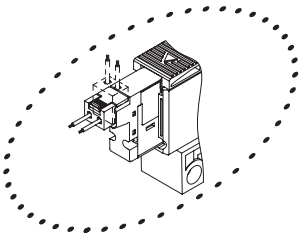

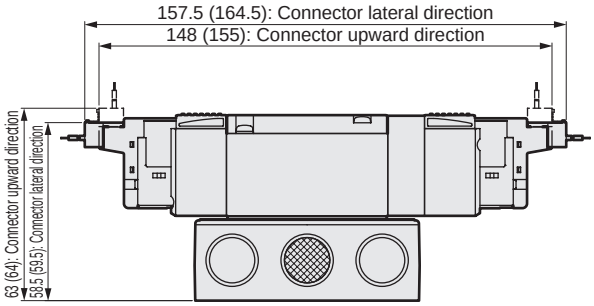

Note: Values in ( ) are for AC voltage.

● EJ type connector (E**J)

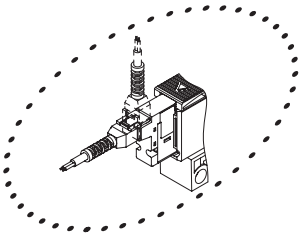

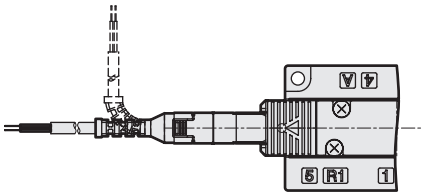

Note: Values in ( ) are for AC voltage.

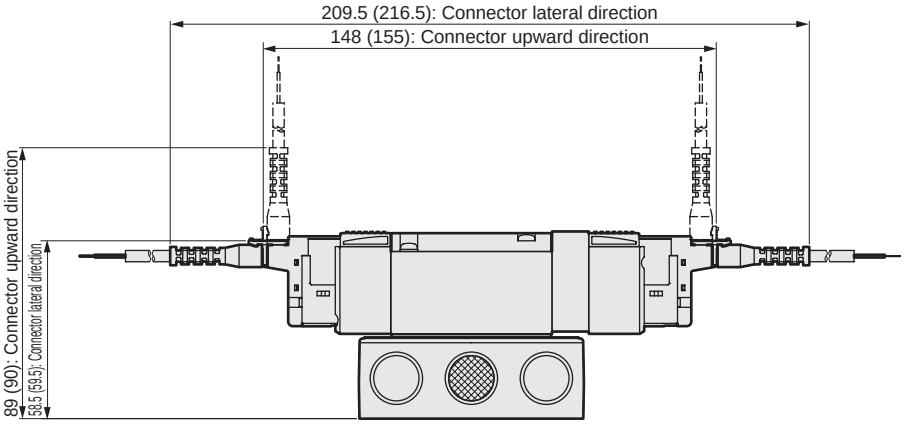

● DIN terminal box (B)

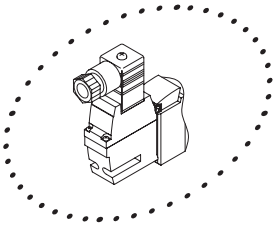

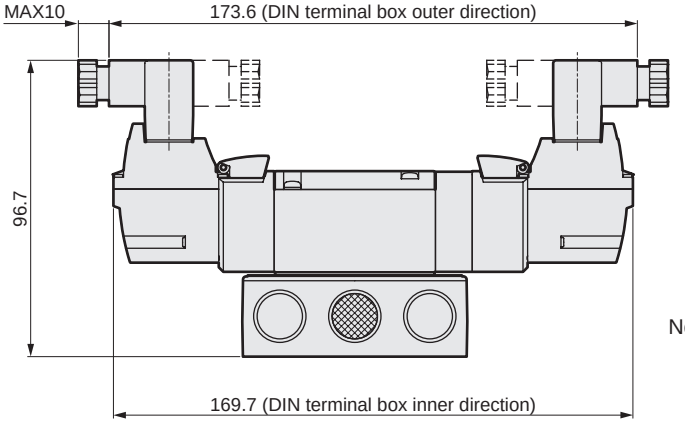

Note: DIN terminal box assembly is shipped facing inward.

Dimensions Port size; NPT thread

3GB1$^{66}_{67}_{76}_{77}$0R, 4GB1$^{1}_{2}_{3}_{4}_{5}$OR

● 2-position single grommet lead wire (blank)

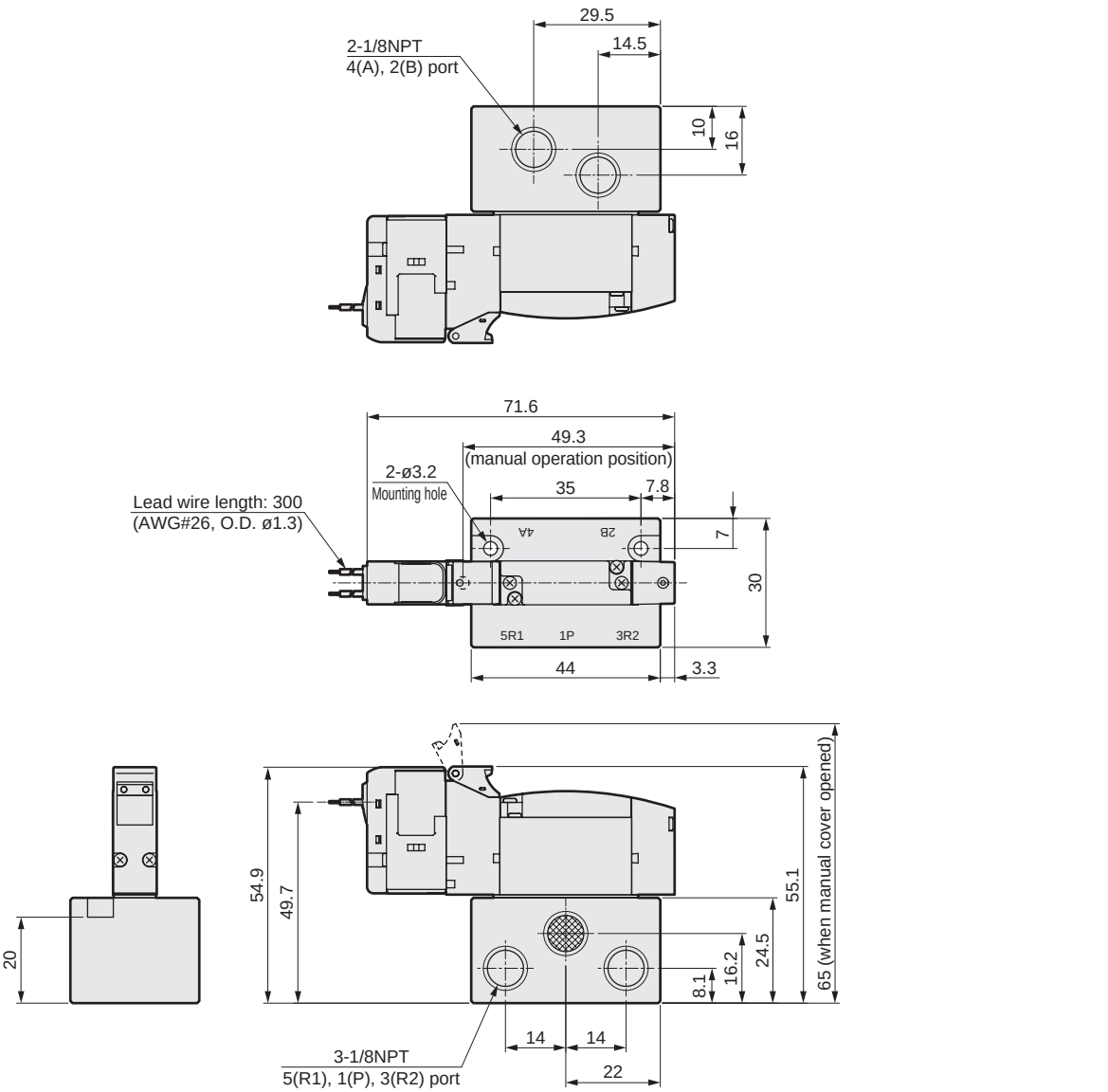

● External pilot (K)

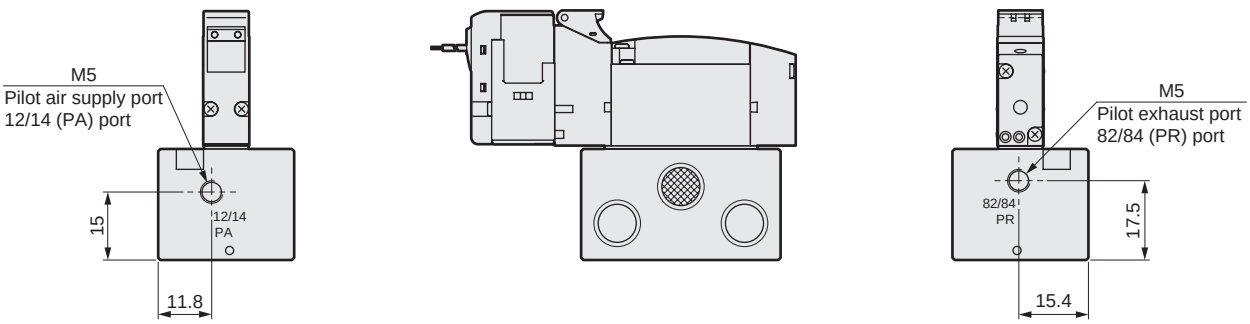

Dimensions Port size; NPT thread

● E-connector (E)

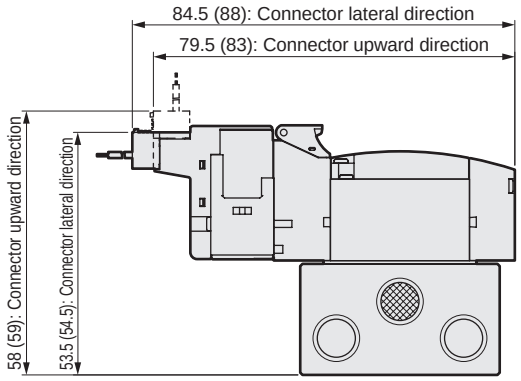

Note: Values in ( ) are for AC voltage.

● EJ type connector (E**J)

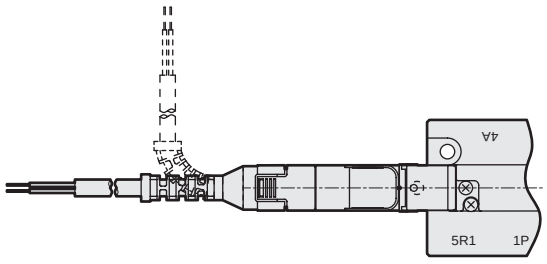

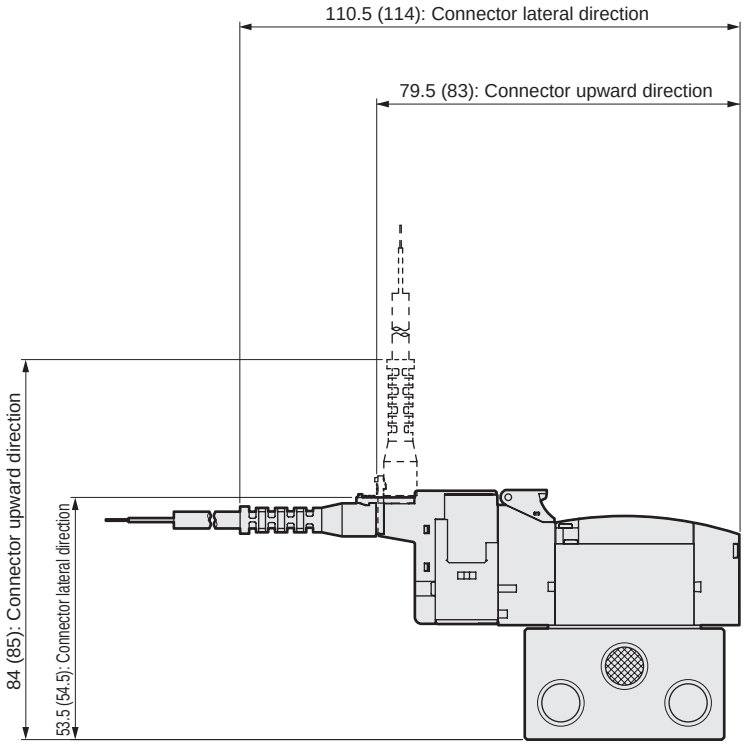

Note: Values in ( ) are for AC voltage.

Dimensions port size; NPT thread

3GB2$^{66}_{67}_{76}_{77}$0R, 4GB2$^{1}_{2}_{3}_{4}_{5}$OR

● 2-position single grommet lead wire (blank)

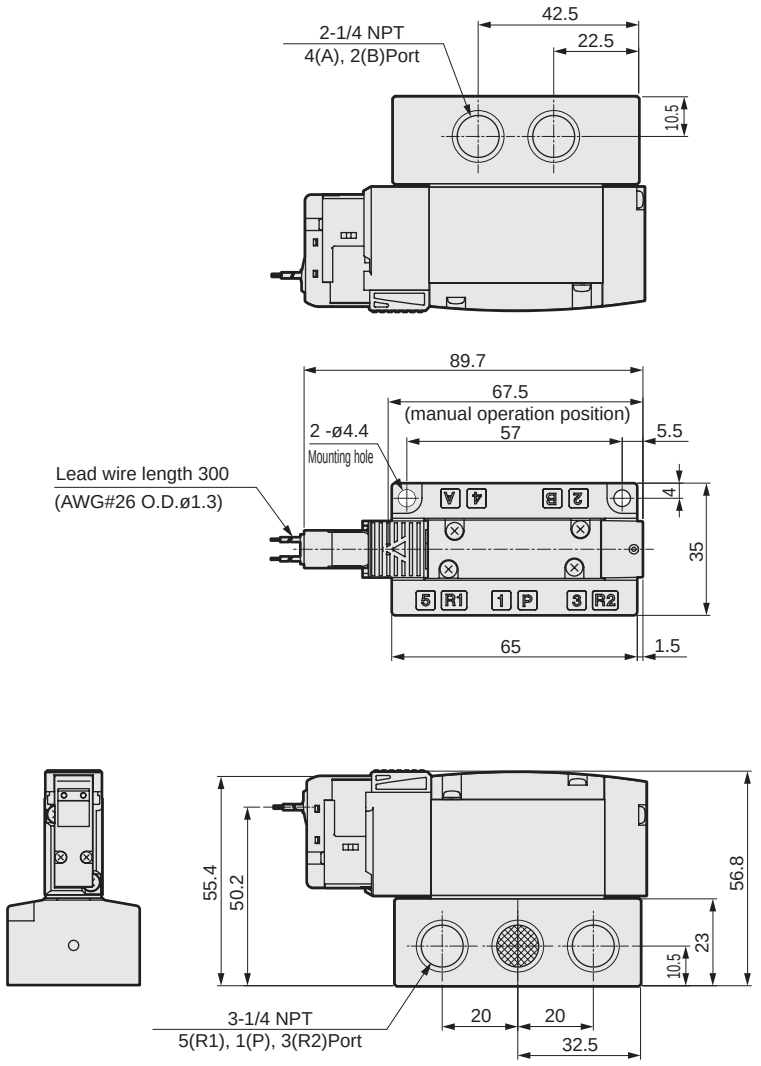

● External pilot (K)

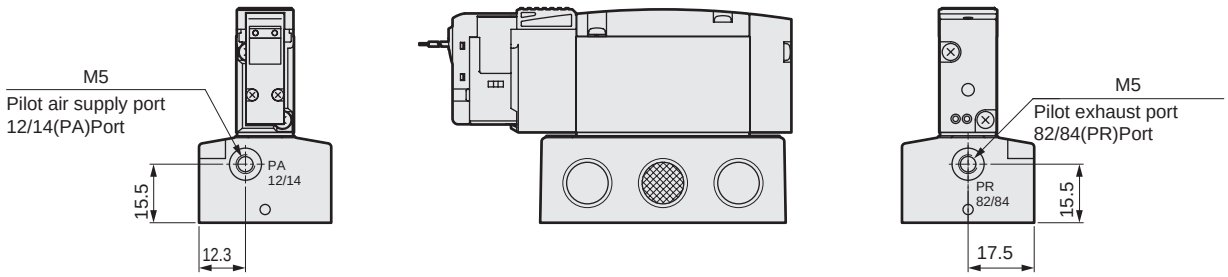

Dimensions port size; NPT thread

● E-connector (E)

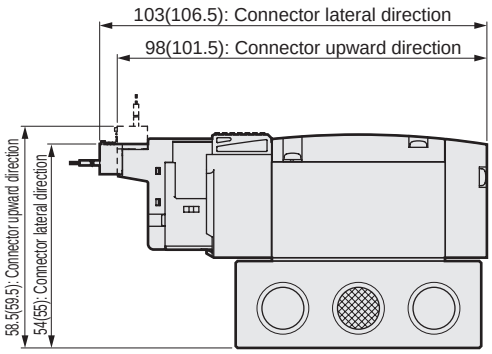

Note: Values in ( ) are for AC voltage.

● EJ type connector (E**J)

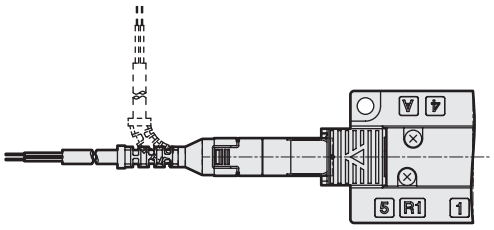

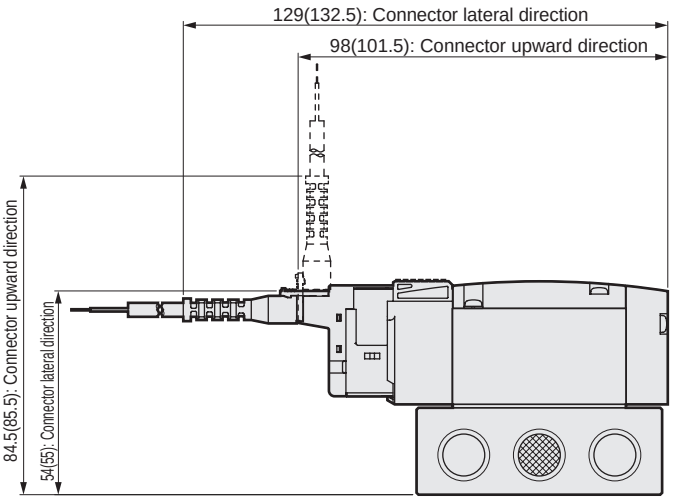

Note: Values in ( ) are for AC voltage.

● DIN terminal box (B)

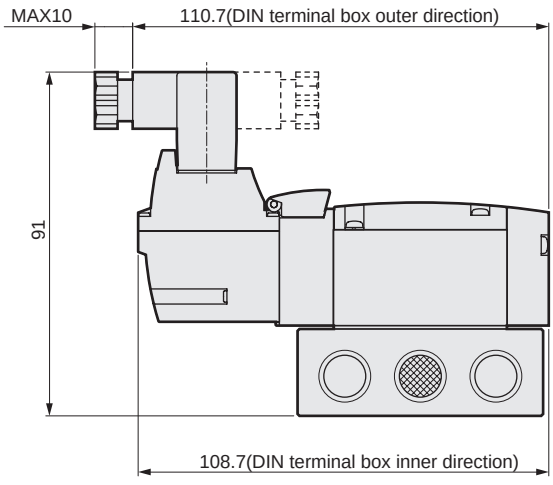

Note: DIN terminal box assembly is shipped facing inward.

Dimensions port size; NPT thread, G thread

4GB3 $^{1}_{2}_{3}_{4}_{5}$0R

● 2-position single grommet lead wire (blank)

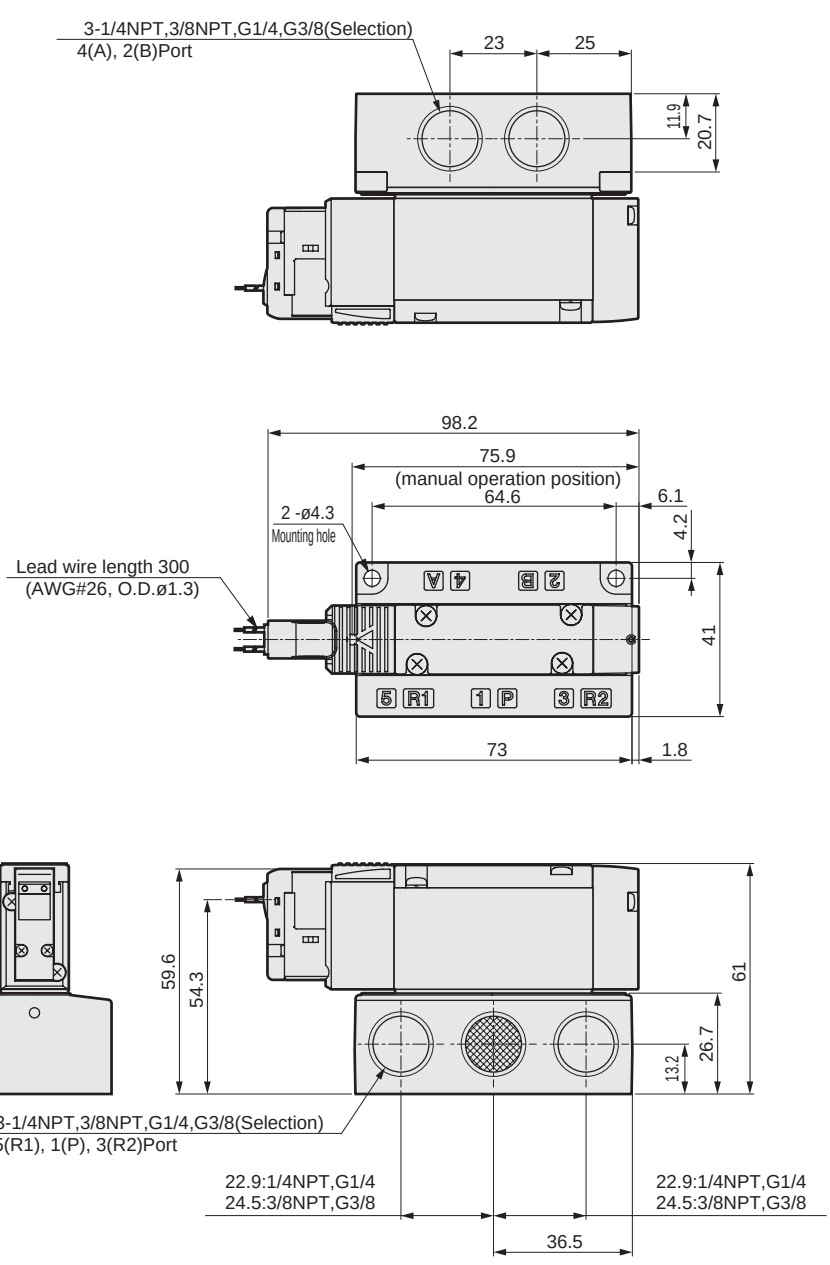

● External pilot (K)

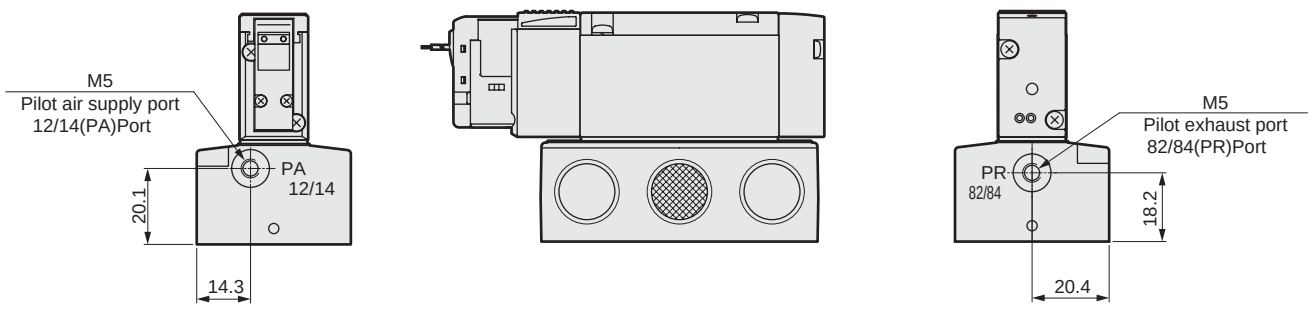

Dimensions port size; NPT thread, G thread

● E-connector (E)

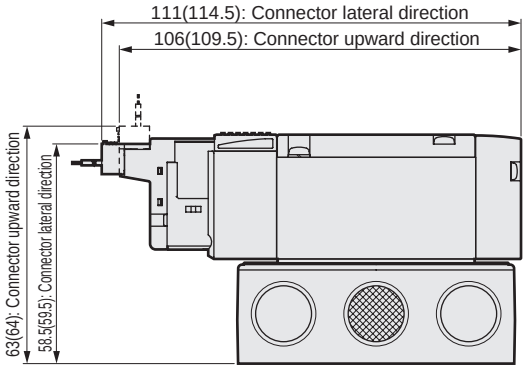

Note: Values in ( ) are for AC voltage.

● EJ type connector (E**J)

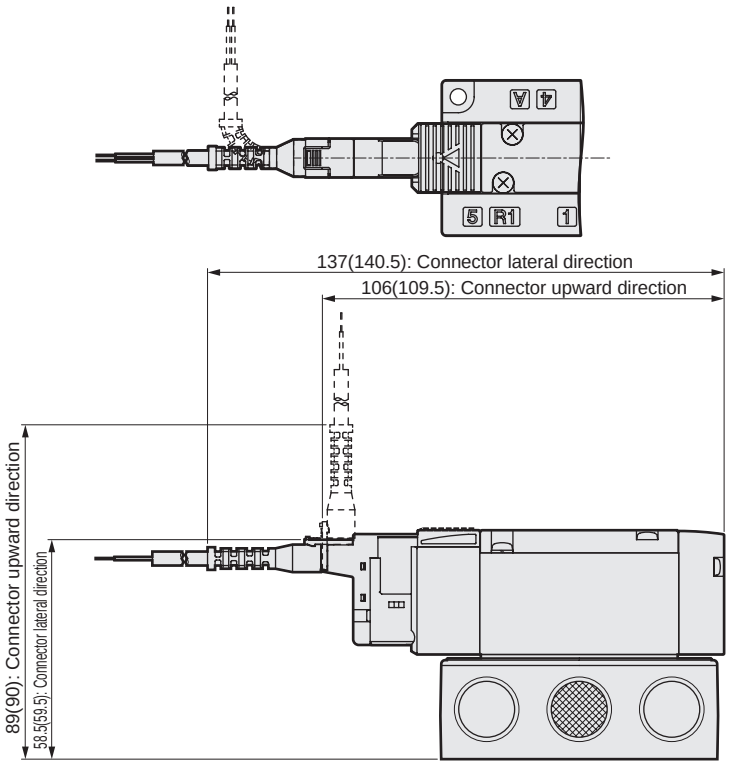

Note: Values in ( ) are for AC voltage.

● DIN terminal box (B)

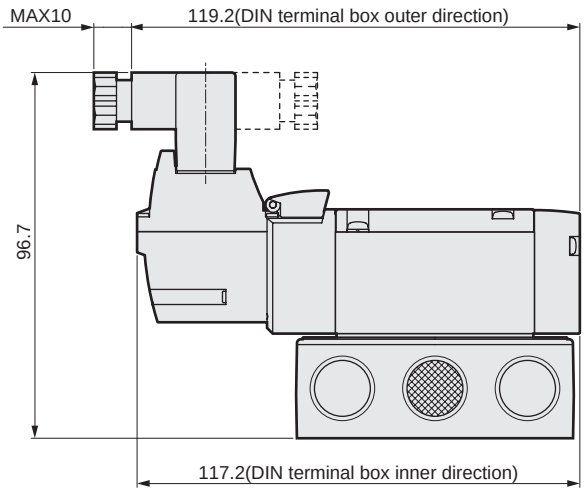

Note: DIN terminal box assembly is shipped facing inward.

Dimensions port size; G thread

3GB1$^{66}_{67}_{76}_{77}$0R, 4GB1$^{1}_{2}_{3}_{4}_{5}$OR

● 2-position single grommet lead wire (blank)

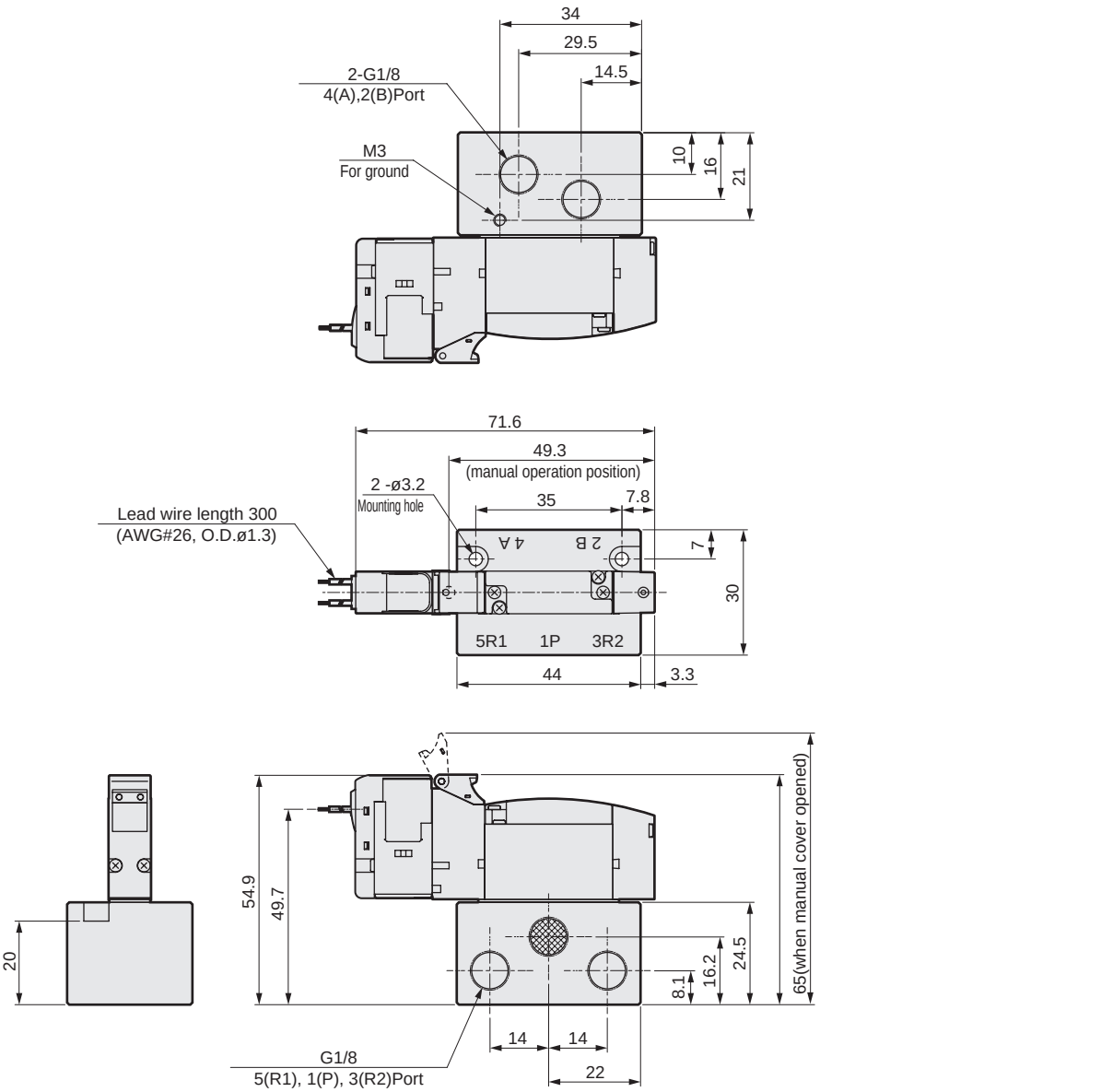

● External pilot (K)

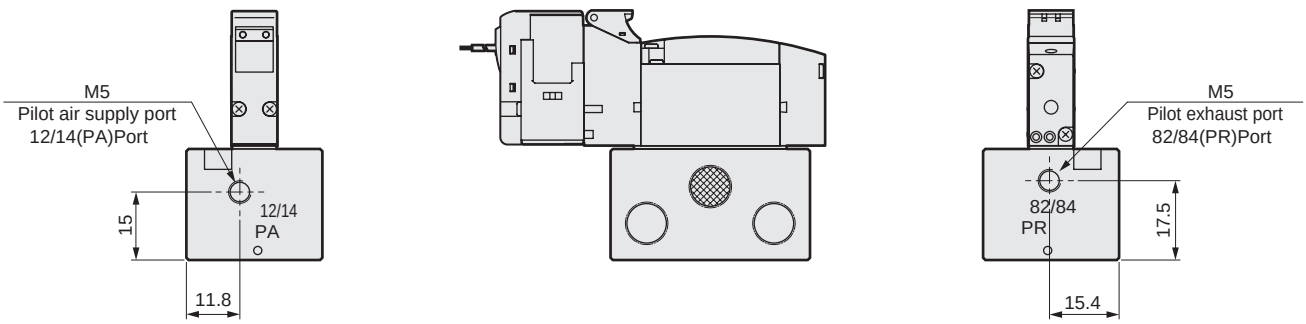

Dimensions port size; G thread

● E-connector (E)

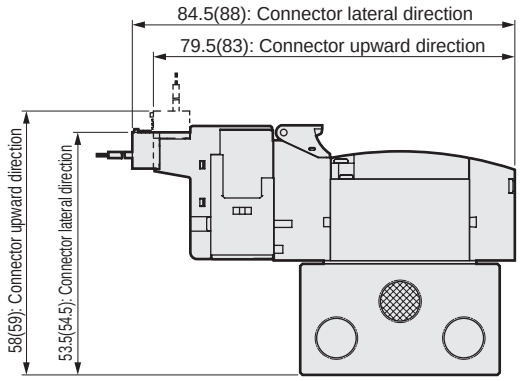

Note: Values in ( ) are for AC voltage.

● EJ type connector (E**J)

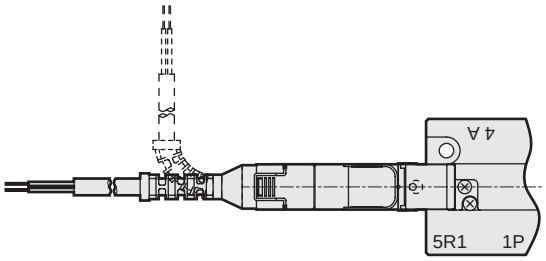

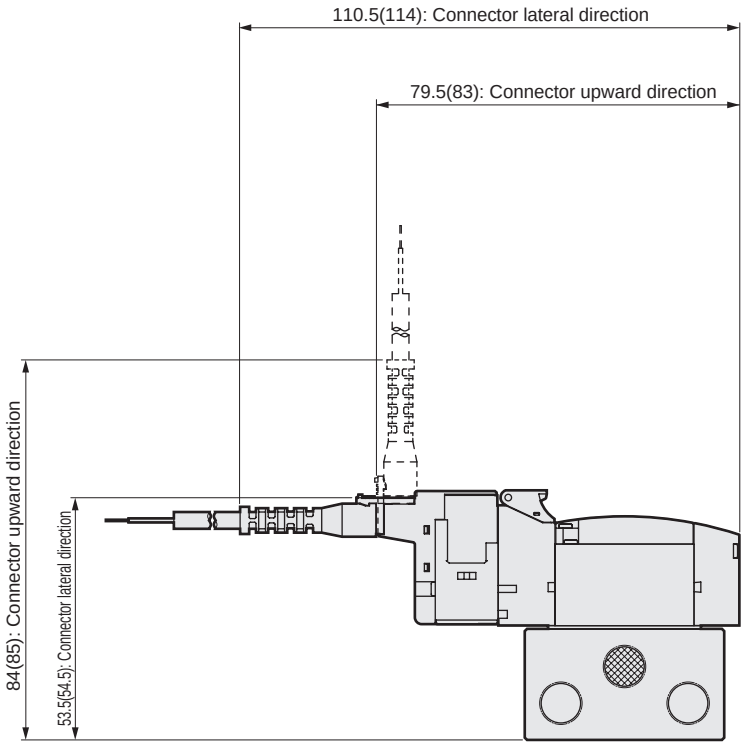

Note: Values in ( ) are for AC voltage.

Dimensions port size; G thread

3GB2$^{66}_{67}_{76}_{77}$0R, 4GB2$^{1}_{2}_{3}_{4}_{5}$OR

● 2-position single grommet lead wire (blank)

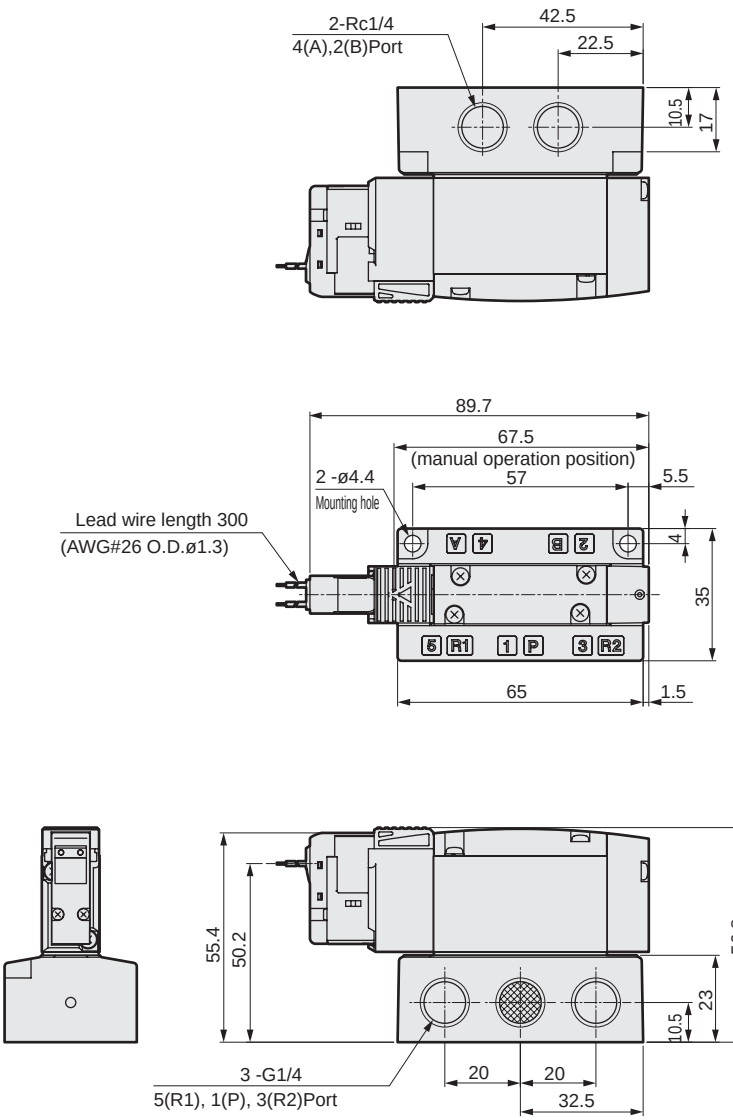

● External pilot (K)

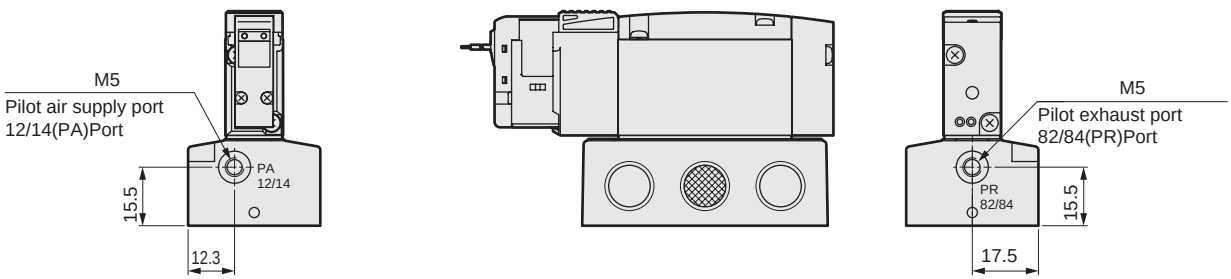

Dimensions port size; G thread

● E-connector (E)

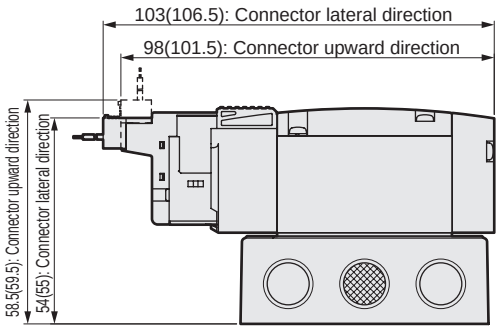

Note: Values in ( ) are for AC voltage.

● EJ type connector (E**J)

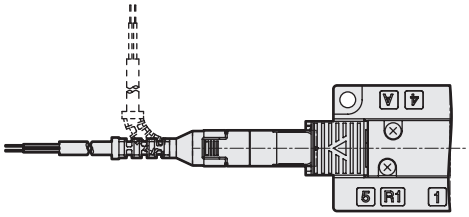

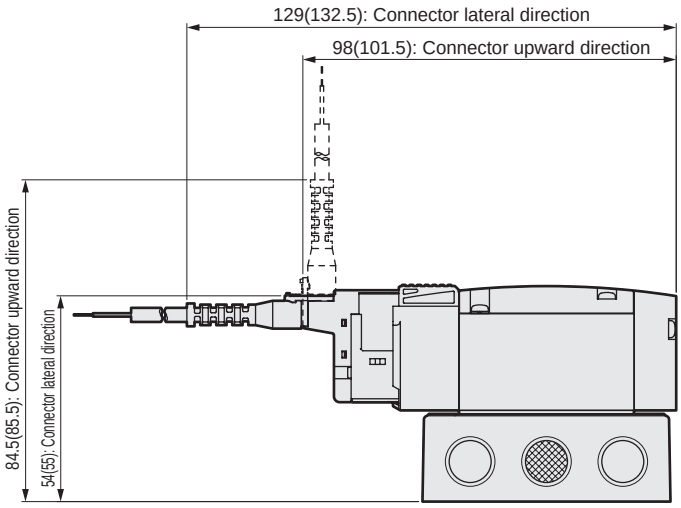

Note: Values in ( ) are for AC voltage.

● DIN terminal box (B)

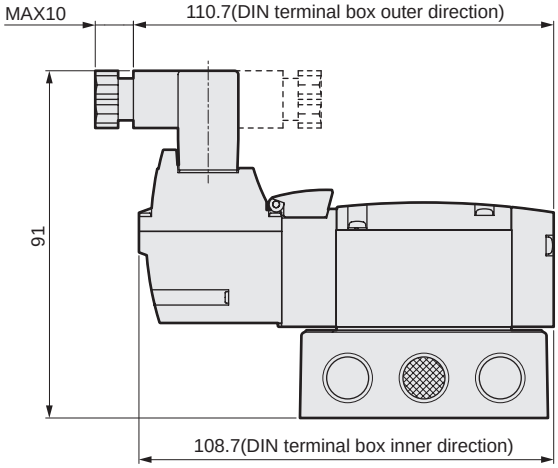

Note: DIN terminal box assembly is shipped facing inward.

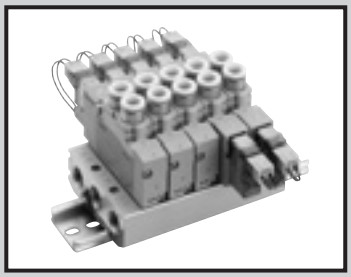

Individual wiring manifold
Body piping
Direct mount/DIN rail mount

M3GA1/2/3-(D), M4GA1/2/3-(D) Series

● Cylinder bore size: ø20 to ø100

JIS symbol

● 3-port valve

2-position single NC

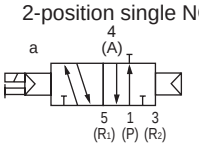

2-position single NO

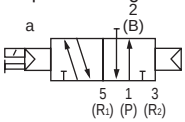

● Two 3-port valves integrated

(A side Valve: NC, B side Valve: NC)

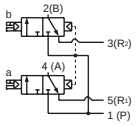

(A side Valve: NC, B side Valve: NO)

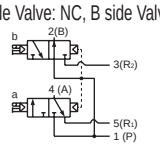

(A sideValve:NO Type, B sideValve:NC Model)

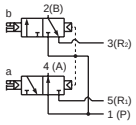

(A side Valve: NO Type, B side Valve: NO Model)

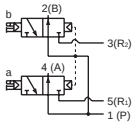

● 5-port valve

2 position single

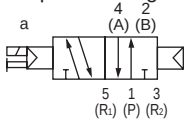

2-position double

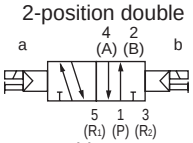

3-position
All ports closed

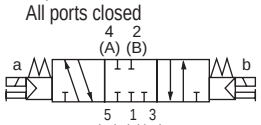

3-position A/B/R connection

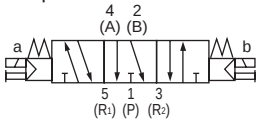

3-position P/A/B connection

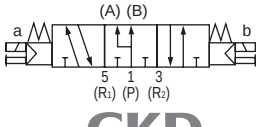

Manifold common specifications

Item		Description
Manifold		Integrated base
Mounting method		Direct mount/DIN rail mount
Air supply and exhaust method		Common supply/common exhaust (With internal exhaust check valve)
Pilot exhaust method	Internal pilot	Main valve/pilot valve common exhaust (Pilot exhaust check valve built-in)
	External pilot	Main valve/pilot valve individual exhaust
Piping direction		Valve top direction
Valve and operation		Pilot operated soft spool valve
Working fluid		Compressed air
Max. working pressure MPa		0.7
Min. working pressure MPa		0.2(*3)
Proof pressure MPa		1.05
Ambient temperature °C		-5 to 55 (no freezing)
Fluid temperature °C		5 to 55
Manual override		Non-locking/locking common (standard)
Lubrication (*1)		Not required
Degree of protection (*2)		Dust-proof
Vibration resistance m/s^2		50 or less
Impact resistance m/s^2		300 or less
Atmosphere		Cannot be used in corrosive gas environments

*1: Use turbine oil Class 1 ISO VG32 for lubrication. Excessive or intermittent lubrication results in unstable operation.
*2: Avoid dripping water or oil, etc., during use. IP65 (jet-proof) applies for DIN terminal box specifications. However, the specified outer diameter of the applicable cord and tightening torque must be used for fixing in place.
*3: The working pressure range is 0 to 0.7 MPa when the external pilot (option code: K) is selected. Set the external pilot pressure between 0.2 and 0.7 MPa.

Electrical specifications

Item		*Description*					
Rated voltage V		24 DC	12 DC	5 DC	3 DC	100 AC	200 AC
Voltage fluctuation range		±10%					
Holding current A (*4)	Standard	0.015 (0.017)	0.030 (0.034)	0.072 (0.082)	0.120 (0.136)	0.009 (0.009)	0.006 (0.006)
	With low exoergic/ energy circuit	0.005	0.010	-		-	
Power consumption W (*4)	Standard	0.35 (0.40)		0.35 (0.40)		-	
	With low exoergic/ energy circuit	0.1		-		-	
Apparent power VA (*4)	Standard	-		-		0.93 (0.98)	1.20 (1.40)
Thermal class		B					
Surge suppressor		Option					
Indicator		Lamp (option)					

*4: Values in ( ) apply when lamp is included. In addition, the type with low exoergic/energy-saving circuit is only available with lamp.

Individual specifications

Item			M3GA1/M4GA1		M3GA2/M4GA2		M3GA3/M4GA3	
			Direct mount	DIN rail mount	Direct mount	DIN rail mount	Direct mount	DIN rail mount
Max. station No.		Standard(Internal pilot)	20 stations	16 stations	20 stations	16 stations	20 stations	16 stations
		External pilot	12 stations	12 stations				
Port size	Rc thread, M5	Port A/B	Barbed fitting ø1.8 Push-in fitting ø1.8, ø4, ø6 M5		Push-in fitting ø4,ø6,ø8 Rc1/8		Push-in fitting ø6,ø8,ø10 Rc1/4	
		Port P/R1/R2	Rc1/8		Rc1/4		Rc3/8	
	NPT thread, M5	Port A/B	Push-in fitting ø1/8", ø5/32" M5		Push-in fitting ø1/4", ø5/16" NPT1/8		Push-in fitting ø5/16", ø3/8" NPT1/4(*5)	
		Port P/R1/R2	NPT1/8		NPT1/4		NPT3/8(*5)	
	G thread, M5	Port A/B	Push-in fitting ø4, ø6 M5		Push-in fitting ø4, ø6, ø8 G1/8		Push-in fitting ø8,ø10 G1/4	
		Port P/R1/R2	G1/8		G1/4		G3/8	
Manifold base Weight calculation formula (n: station No.) g		Standard	23n+52	25n+60	47n+64	49n+92	74n+88	76n+117
		External pilot	36n+105	38n+113	88n+135	90n+163	136n+194	138n+223

*5:Available as made-to-order product.

Refer to "Cautions for Mounting the DIN Rail" (page 854), and select the manifold.
For 10 or more manifold station No. (5 stations for 4G3), use ports on both side for air supply and exhaust. The manifold base weight is the value for screw specifications.

Performance/characteristics by model

Item			M3GA1		M3GA2		M3GA3		M4GA1		M4GA2		M4GA3	
			ON	OFF	ON	OFF	ON	OFF	ON	OFF	ON	OFAt F	ON	OFF
Response time ms	Two 3-port valves integrated		9	12	12	29	-	-	-	-	-	-	-	-
	2-position	Single	12	12	19	19	25	28	12	12	19	19	25	28
		Double	-	-	-	-	-	-	9	-	18	-	24	-
	3-position	ABR connection	-	-	-	-	-	-	8	15	17	30	23	45

Values with lamp/surge suppressor are shown. The response times are values with working pressure of 0.5 MPa at 20°C, without lubrication. They depend on the pressure and the lubricant quality.

Flow characteristics

Model No.	Solenoid position		P → A/B		A/B → R1/R2	
			C[dm³/(s·bar)]	b	C[dm³/(s·bar)]	b
M3GA1 *M4GA1*	Two 3-port valves integrated		0.86	0.31	1.1 (0.66)	0.19 (0.22)
	2-position		0.99	0.20	1.2 (0.70)	0.20 (0.12)
	3-position	All ports closed	0.94	0.23	1.1 -	0.20 -
		ABR connection	0.93	0.18	1.3 (0.70)	0.23 (0.02)
		PAB connection	1.1	0.28	1.1 -	0.23 -
M3GA2 *M4GA2*	Two 3-port valves integrated		1.7	0.40	2.3 (1.7)	0.29 (0.32)
	2-position		2.3	0.36	2.9 (1.7)	0.24 (0.33)
	3-position	All ports closed	2.1	0.35	2.5 -	0.32 -
		ABR connection	2.2	0.37	2.9 (1.8)	0.32 (0.29)
		PAB connection	2.4	0.34	2.5 -	0.33 -
M3GA3 *M4GA3*	2-position		3.2	0.37	3.8 (2.5)	0.13 (0.28)
	3-position	All ports closed	2.9	0.35	3.3 -	0.35 -
		ABR connection	3.0	0.34	3.8 (2.6)	0.12 (0.27)
		PAB connection	3.3	0.30	3.3 -	0.32 -

*1: Effective cross-sectional area S and sonic conductance C are converted as S ≈ 5.0 × C.
*2: Values in ( ) are with the exhaust check valve.

Ozone-proof specifications • Coolant proof specifications

Can be selected with "How to order" Item Ⓔ option "A" on page 99.

Clean-room specifications

● Anti-dust generation structure for use in cleanrooms

** - Voltage - **P7***

Specifications for rechargeable battery

(Catalog No.CC-1226A)

● For use in the rechargeable battery manufacturing process, materials used for air path and sliding section are limited

** - Voltage - **P4**

CE marking specifications

** - Voltage - **ST**

•Standard voltage of 24 VDC or less is CE marking-compatible even if the model No. is not indicated with "ST".

How to order

Manifold model No.

M 4GA1 1 0R - C6 - E2 H D - ○ - 3

* Be sure to fill in the "Manifold specifications sheet" (pages 210 to 212).

3-port manifold model No.

M 3GA1 1 0R - C6 - E2 H D - ○ - 3

● Single valve for mounting base

4GA1 1 9R - C6 - E2 H — 3

● 3-port discrete valve for mounting base

3GA1 1 9R - C6 - E2 H — 3

Ⓑ Solenoid position

Ⓐ Model No.

Ⓒ Port size

Ⓓ Electrical connections

Ⓔ Option

Ⓕ Mount type

Ⓖ Station No.

Ⓗ Voltage

Code	Content Volume		Ⓐ Model No. 3GA1	3GA2	3GA3	4GA1	4GA2	4GA3
Ⓑ Solenoid position								
1	2 position single					●	●	●
2	2-position double					●	●	●
3	3-position all ports closed					●	●	●
4	3-position ABR connection					●	●	●
5	3-position PAB connection					●	●	●
1	2-position single normally closed (*1)		●	●	●			
11	2-position single normally open (*1)		●	●	●			
66	3-port valve Two valves integrated (*1) (*2)	A valve side: Normally closed B valve side: Normally closed	●	●				
67		A valve side: Normally closed B valve side: Normally open	●	●				
76		A valve side: Normally open B valve side: Normally closed	●	●				
77		A valve side: Normally open B valve side: Normally open	●	●				
8	Mix manifold (when there are multiple solenoid positions)		●	●	●	●	●	●

Ⓒ Port size Port	4(A)/2(B)Port	Port P/R1/R2 (1/8) = Rc1/8 (1/4) = Rc1/4 (3/8) =Rc3/8					
CF	ø1.8 barbed fittinghand(compatible tube UP-9102-**)	②			②		
C18	ø1.8 Push-in fittinghand(compatible tube UP-9402-**)	②			②		
C4	ø4 push-in fitting	②	③		②	③	
C6	ø6 push-in fitting	②	③	④	②	③	④
C8	ø8 push-in fitting		③	④		③	④
C10	ø10 push-in fitting			④			④
CX	Push-in fitting mix (*3)	②	③	④	②	③	④
M5	M5	②			②		
06	Rc1/8		③			③	
08	Rc1/4			④			④
Port	4(A)/2(B)Port	Port P/R1/R2 (1/8) = 1/8NPT, (1/4) = 1/4NPT, (3/8) = 3/8NPT					
C3N	ø1/8" push-in fitting	⑤			⑤		
C4N	ø5/32" push-in fitting	⑤			⑤		
C6N	ø1/4" push-in fitting		⑥			⑥	
C8N	ø5/16" push-in fitting		⑥	⑦		⑥	⑦
C10N	ø3/8" push-in fitting			⑦			⑦
CXN	Push-in fitting mix (*3)	⑤	⑥	⑦	⑤	⑥	⑦
M5N	M5	⑤			⑤		
06 N	NPT1/8		⑥			⑥	
08 N	NPT1/4 (*4)			⑦			⑦
Port	4(A)/2(B)Port	Port P/R1/R2 (1/8) = G1/8, (1/4) = G1/4 (10)=G3/8					
C4G	ø4 push-in fitting	⑧	⑨		⑧	⑨	
C6G	ø6 push-in fitting	⑧	⑨		⑧	⑨	
C8G	ø8 push-in fitting		⑨	⑩		⑨	⑩
C10G	ø10 push-in fitting			⑩			⑩
CXG	Push-in fitting mix (*3)	⑧	⑨	⑩	⑧	⑨	⑩
M5G	M5	⑧			⑧		
06G	G1/8		⑨			⑨	
08G	G1/4			⑩			⑩

Precautions for model No. selection

*1: Select M4GA*80R when mixing with 3, 5-port valves. Also, select M3GA*80R when mixing with masking plate.
*2: Not compatible with combination with external pilot (K). Dimensions are the same as those of the respective 2-position double solenoid.
*3: The push-in fitting cannot be mixed with the discrete valve's 4(A) or 2(B) port.
*4: Made-to-order product.

		Ⓐ Model No.					
		3GA1	3GA2	3GA3	4GA1	4GA2	4GA3
Ⓓ Electrical connections							
Blank	Grommet lead wire (300 mm) (*12)	●	●	●	●	●	●
B	DIN terminal box (Pg7)with surge suppressor/lamp (*13) (*15)		●	●		●	●
BN	DIN terminal box (Pg7) (without terminal box)with surge suppressor (*13) (*15)		●	●		●	●
E-connector (upward/lateral common)							
E0	Lead wire (300 mm) (*14)	●	●	●	●	●	●
E00	Lead wire (500 mm) (*14)	●	●	●	●	●	●
E01	Lead wire (1000 mm) (*14)	●	●	●	●	●	●
E02	Lead wire (2000 mm) (*14)	●	●	●	●	●	●
E03	Lead wire (3000 mm) (*14)	●	●	●	●	●	●
E0N	Without lead wire (without socket) (*14)	●	●	●	●	●	●
E1	Without lead wire (socket/terminal attached) (*14)	●	●	●	●	●	●
E2	Lead wire (300 mm), surge suppressor/indicator lamp	●	●	●	●	●	●
E20	Lead wire (500 mm), surge suppressor/indicator lamp	●	●	●	●	●	●
E21	Lead wire (1000 mm), surge suppressor/indicator lamp	●	●	●	●	●	●
E22	Lead wire (2000 mm), surge suppressor/indicator lamp	●	●	●	●	●	●
E23	Lead wire (3000 mm), surge suppressor/indicator lamp	●	●	●	●	●	●
E2N	No lead wire (without socket), surge suppressor/indicator lamp	●	●	●	●	●	●
E3	No lead wire (with socket/terminal), surge suppressor/indicator lamp	●	●	●	●	●	●
EJ-connector (socket with cover, upward/lateral common)							
E01J	Lead wire (1000 mm) (*14)	●	●	●	●	●	●
E02J	Lead wire (2000 mm) (*14)	●	●	●	●	●	●
E03J	Lead wire (3000 mm) (*14)	●	●	●	●	●	●
E21J	Lead wire (1000 mm), surge suppressor/indicator lamp	●	●	●	●	●	●
E22J	Lead wire (2000 mm), surge suppressor/indicator lamp	●	●	●	●	●	●
E23J	Lead wire (3000 mm), surge suppressor/indicator lamp	●	●	●	●	●	●
Ⓔ Option							
Blank	Non-locking/locking common manual override	●	●	●	●	●	●
M	Non-locking manual override	●	●	●	●	●	●
H	With exhaust check valve (*5)	●	●	●	●	●	●
K	External pilot (*6)	●	●	●	●	●	●
A	Ozone/coolant proof	●	●	●	●	●	●
S	Surgeless (*7)	●	●	●	●	●	●
E	Low exoergic/energy saving circuit (*7) (*8)	●	●	●	●	●	●
F	A/B port filter built in (*9)	●	●	●	●	●	●
Z1	Air supply spacer (*10)	●	●	●	●	●	●
Z2	In-stop valve spacer (*10) (*11)	●	●	●	●	●	●
Z3	Exhaust spacer (*10)	●	●	●	●	●	●
Ⓕ Mount							
Blank	Direct mount	●	●	●	●	●	●
D	DIN rail mount	●	●	●	●	●	●
Ⓖ Station No.							
2	2 stations	●	●	●	●	●	●
to	to						
20	Refer to page 96 for the max. station number per model.						
Ⓗ Voltage							
1	100 VAC (rectifier integrated)	●	●	●	●	●	●
2	200 VAC (rectifier integrated)	●	●	●	●	●	●
3	24 VDC	●	●	●	●	●	●
4	12 VDC	●	●	●	●	●	●
7	3 VDC	○	○	○	○	○	○
8	5 VDC	○	○	○	○	○	○

is not available.

○ indicates a custom order.

*5 : 3-position all ports closed and PAB connection are not provided with the exhaust check valve specifications (H). Refer to page 851 for details on the exhaust check valve.
*6 : Contact CKD when using a vacuum with the external pilot (K).
7 : E2 type and E2*J type connectors support 12/24 VDC only. In addition, surgeless "S" and low exoergic/energy-saving circuit "E" cannot be selected together.
*8 : Surgeless specifications.
*9 : A filter is built into the P-port as standard.
*10: Specify the spacer mounting position/quantity in manifold specifications sheet. Stacking of spacers is not possible. Combination with the masking plate is not supported. Refer to pages 188 to 192 for details.
*11: Not compatible with combination with external pilot (K).
*12: The grommet lead wire specifications are compatible with DC voltage only.
*13: AC voltages and 12/24 VDC are supported. In addition, a lamp comes with the terminal box.
*14: AC voltage is with a rectifier circuit.
*15: The terminal box conforms to EN175301-803 Type C (former DIN 43650-C). Refer to pages 856 and 857 for details.

Electrical connections

Discrete valve/individual wiring manifold

Blank Grommet lead wire

E1 E3 E-connector with socket/terminal

● **Lead wire length**
300 mm

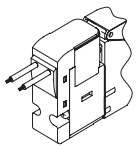

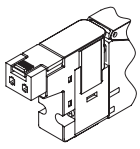

E0 E2 E-connector

● **Lead wire length**
300 mm
500 mm
1000 mm
2000 mm
3000 mm

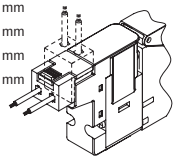

B DIN terminal box

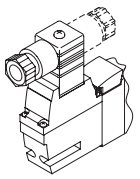

E0N E2N E-connector without socket

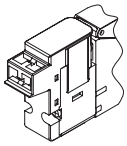

BN DIN terminal box (Without terminal box)

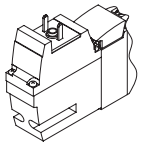

E0*J E2*J EJ-connector

● **Lead wire length**
1 m
2 m
3 m

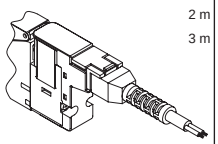

Manifold components explanation and parts list

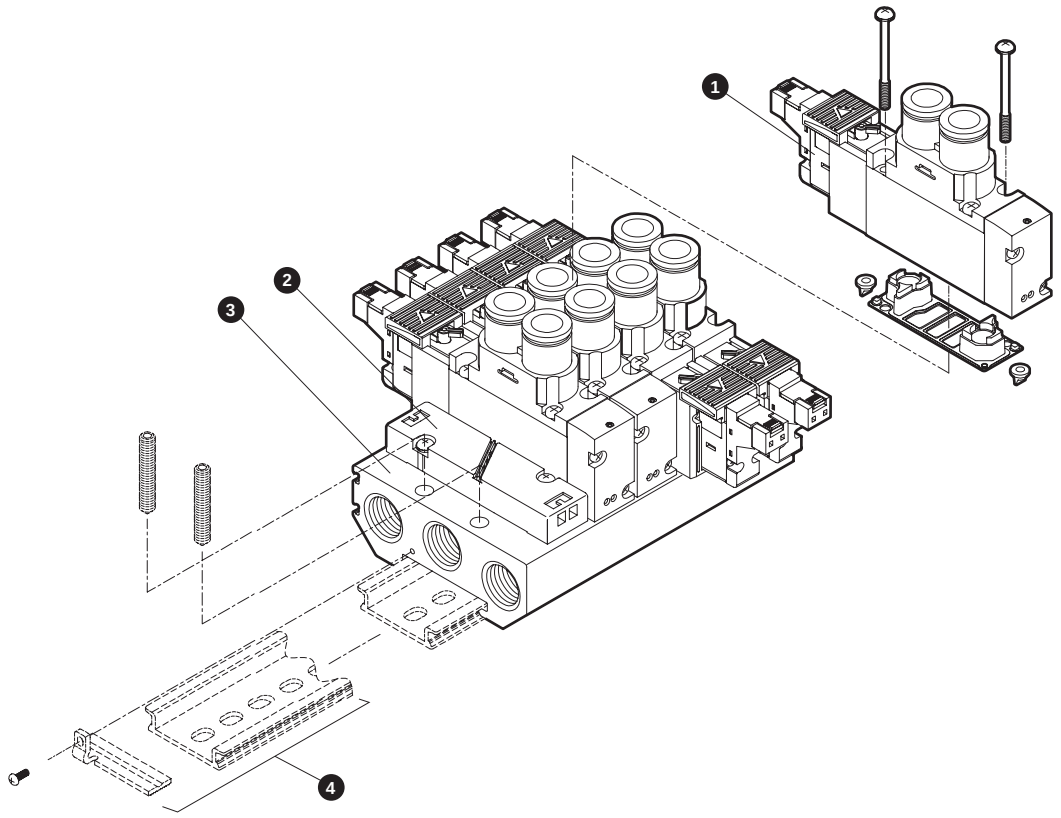

Main parts list

No.	Component name		Model No.	Description	Remarks
1	Discrete valve for mounting base		4GA□□9R- [Port size] — [Electrical connections] [Option] - [Voltage] [Solenoid position] [Series flow rate size]	Discrete valve Gasket 2 mounting screws 2 PR check valves	Details on page 98
2	Masking plate	3G1/4G1	4G1R-MP	Masking plate Gasket 2 mounting screws	* 4G3R-MP has two PR check valves included.
		3G2/4G2	4G2R-MP		
		3G3/4G3	4G3R-MP		
3	Manifold base assembly		M4GA□R-00- [Option] - [Station No.] [Series flow rate size]	Manifold base	
4	DIN rail kit		4GA □R-BAA [Rail length] - [Option] D [Series flow rate size]		Details on page 200

Parts list

No.	Part name	Model No.
-	Coil assembly	4GR - [electrical connections] - □ - COIL - [voltage] Blank: Standard A: Ozone/coolant proof S: Surgeless E: Low exoergic/energy saving circuit K: External pilot Select from Electrical connections Ⓓ on page 98
-	E-connector Socket assembly	4GR - SOCKET - ASSY - [electrical connections] - [voltage]
-	EJ-connector Socket assembly	4GR - SOCKET - ASSY - [electrical connections]

No.	Part name			Model No.
-	Cartridge push-in fitting and related parts	4G1	ø1.8 barbed	4G1R-JOINT-CF
			ø1.8 axial	4G1R-JOINT-C18
			ø4 straight	4G1R-JOINT-C4
			ø6 straight	4G1R-JOINT-C6
			ø1/8" straight	4G1R-JOINT-C3N
			ø5/32" straight	4G1R-JOINT-C4N
			Plug cartridge	4G1R-JOINT-CPG
		4G2	ø4 straight	4G2R-JOINT-C4
			ø6 straight	4G2R-JOINT-C6
			ø8 straight	4G2R-JOINT-C8
			ø1/4" straight	4G2R-JOINT-C6N
			ø5/16" straight	4G2R-JOINT-C8N
			Plug cartridge	4G2R-JOINT-CPG
		4G3	ø6 straight	4G3R-JOINT-C6
			ø8 straight	4G3R-JOINT-C8
			ø10 straight	4G3R-JOINT-C10
			ø5/16" straight	4G3R-JOINT-C8N
			ø3/8" straight	4G3R-JOINT-C10N
			Plug cartridge	4G3R-JOINT-CPG

MEMO

Dimensions CAD

M4GA1

● Grommet lead wire (blank)

* For the 2-position single 3-port valve, either port A or port B is a plug. In addition, the two 3-port valve built-in type has the same dimensions as the double model.
* Refer to page 855 for mounting hole details.

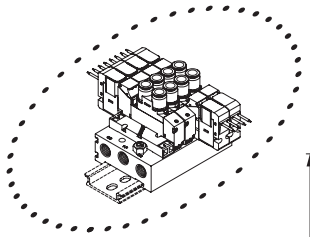

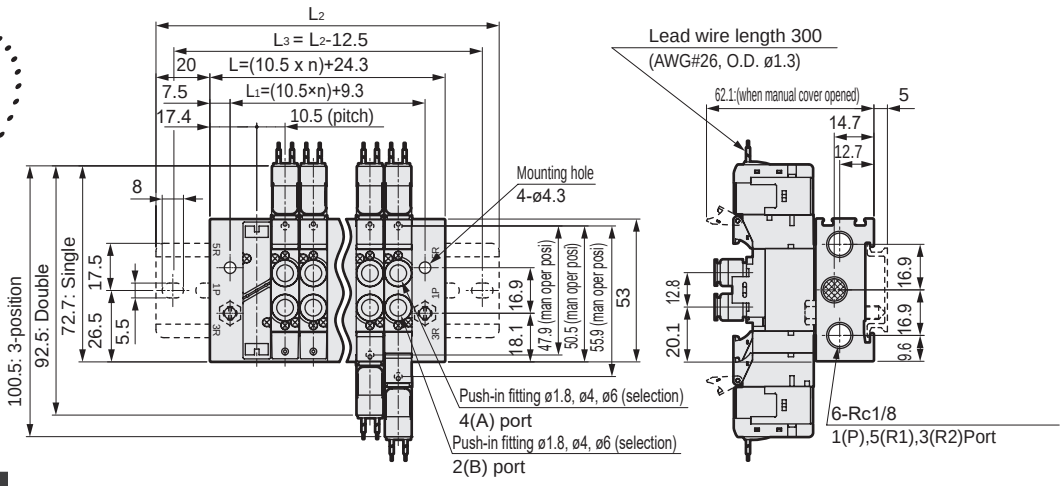

Push-in fitting Bore size	* Dimensions
ø1.8	54
ø4	58
ø6	59.2
ø1/8"	58.5
ø5/32"	58

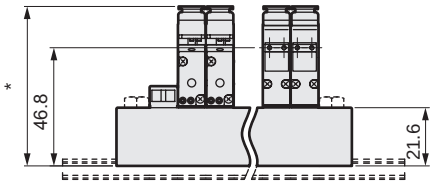

● ø1.8 barbed fitting(CF)

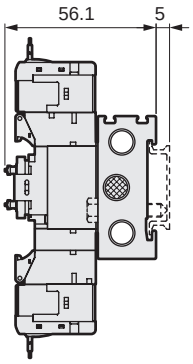

● M5 female thread (M5)

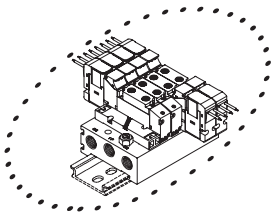

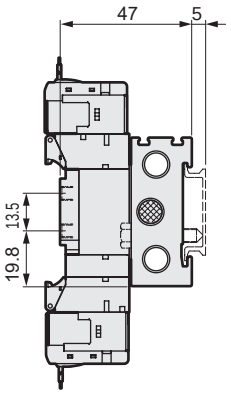

● E-connector (E)

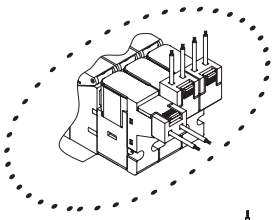

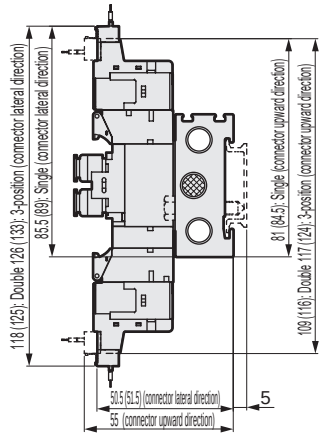

● EJ-connector (E**J)

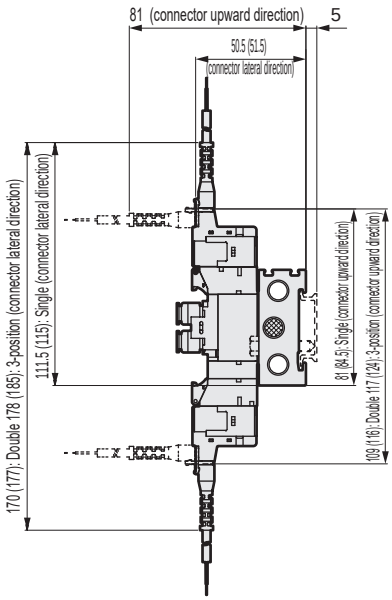

Note: Values in ( ) are for AC voltage.

Station No.	2	3	4	5	6	7	8	9	10	11	12	13	14	15	16	17	18	19	20
L	45.3	55.8	66.3	76.8	87.3	97.8	108.3	118.8	129.3	139.8	150.3	160.8	171.3	181.8	192.3	202.8	213.3	223.8	234.3
L_1	30.3	40.8	51.3	61.8	72.3	82.8	93.3	103.8	114.3	124.8	135.3	145.8	156.3	166.8	177.3	187.8	198.3	208.8	219.3
L_2	87.5	100.0	112.5	125.0	137.5	150.0	150.0	162.5	175.0	187.5	200.0	212.5	212.5	225.0	237.5				
L_3	75.0	87.5	100.0	112.5	125.0	137.5	137.5	150.0	162.5	175.0	187.5	200.0	200.0	212.5	225.0				

Dimensions

M4GA1

● External pilot (K)
Grommet lead wire (blank)

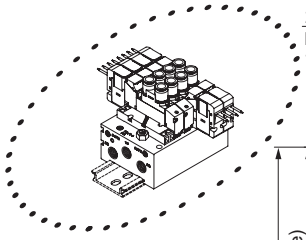

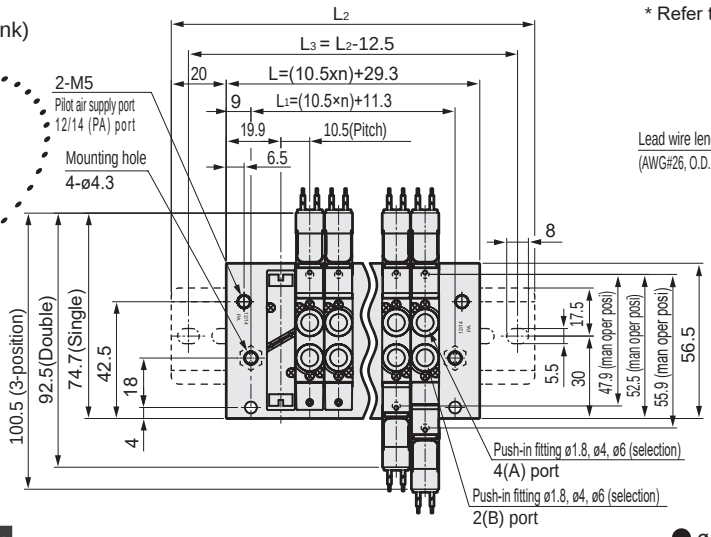

* For the 2-position single 3-port valve, either port A or port B is a plug.
* Refer to page 855 for mounting hole details.

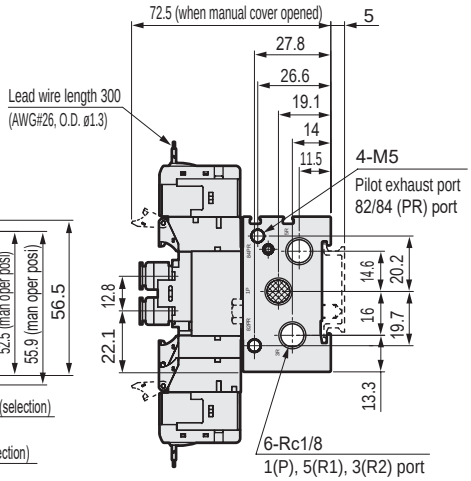

Push-in fitting bore size	* Dimensions
ø1.8	64.4
ø4	68.4
ø6	69.6
ø1/8"	68.9
ø5/32"	68.4

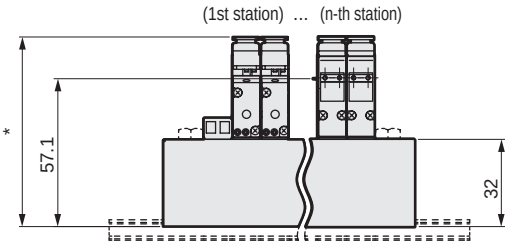

● ø 1.8 barbed fitting(CF)

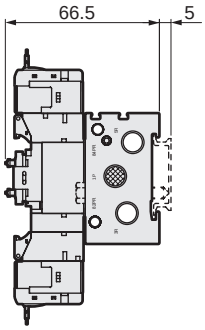

● External pilot (K)
M5 female thread (M5)

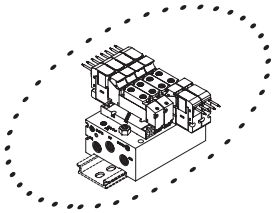

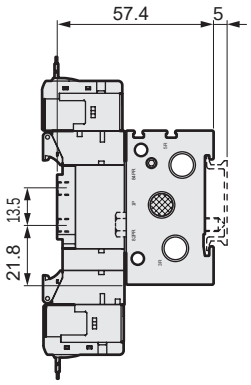

● External pilot (K)
E-connector (E)

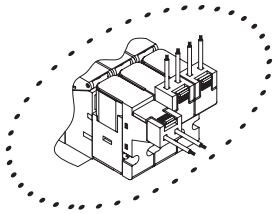

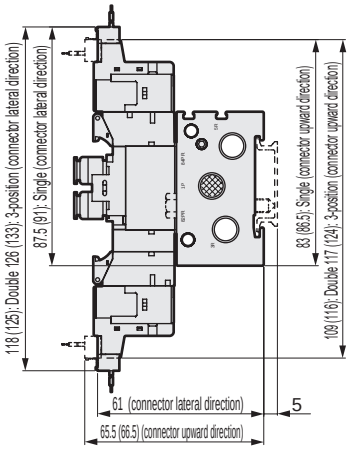

● External pilot (K)
EJ-connector (E**J)

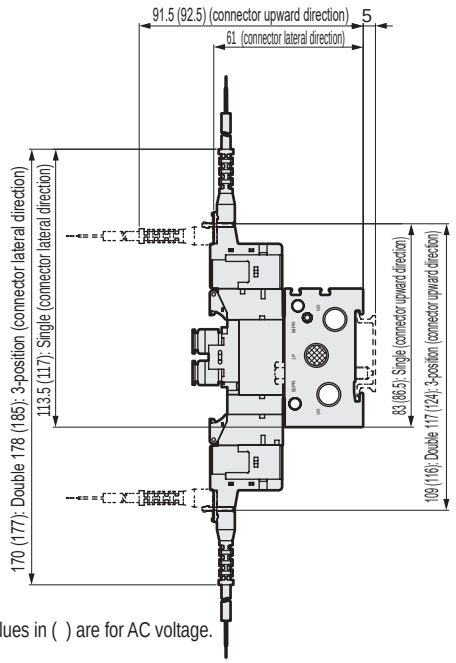

Note: Values in ( ) are for AC voltage.

Station No.	2	3	4	5	6	7	8	9	10	11	12
L	50.3	60.8	71.3	81.8	92.3	102.8	113.3	123.8	134.3	144.8	155.3
L_1	32.3	42.8	53.3	63.8	74.3	84.8	95.3	105.8	116.3	126.8	137.3
L_2	100.0	112.5	112.5	125.0	137.5	150.0	162.5	175.0	175.0	187.5	200.0
L_3	87.5	100.0	100.0	112.5	125.0	137.5	150.0	162.5	162.5	175.0	187.5

Dimensions CAD

M4GA2

● Grommet lead wire (blank)

* For the 2-position single 3-port valve, either A port or B port is a plug.
In addition, the two 3-port valve integrated has the same dimensions as the double model.

* Refer to page 854 for mounting hole details.

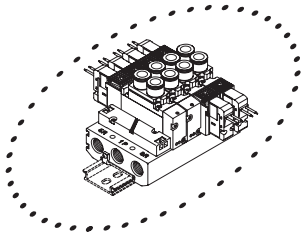

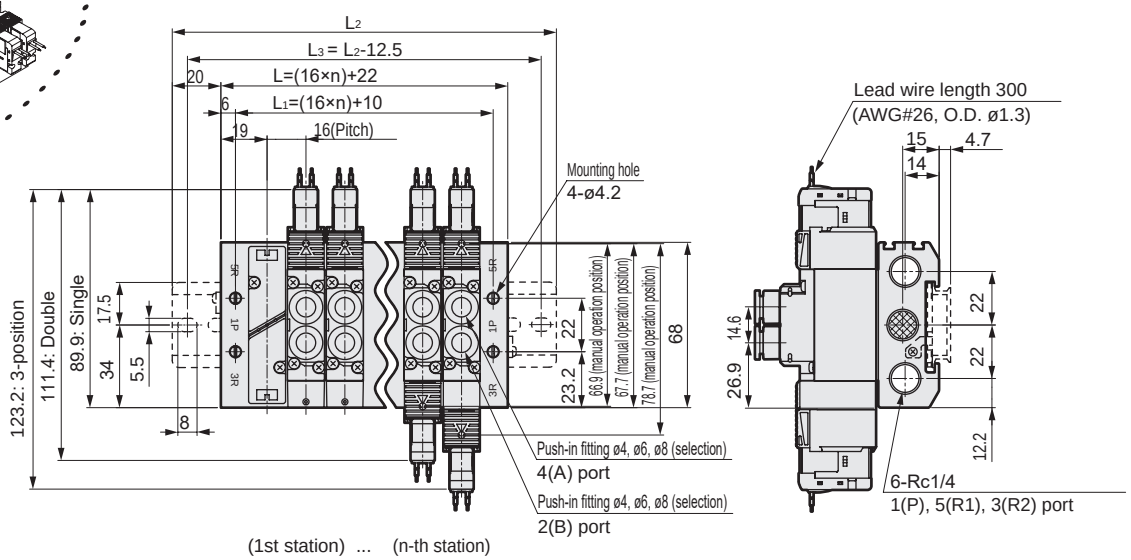

(1st station) ... (n-th station)

Push-in fitting Bore size	*1 dimension
ø4	76
ø6	
ø8	
ø1/4"	76.9
ø5/16"	76.2

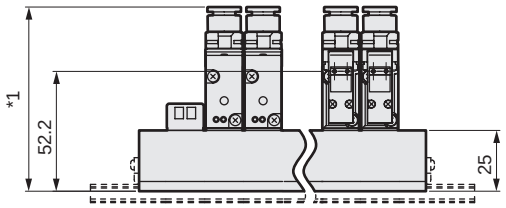

● Rc1/8 female thread (06)

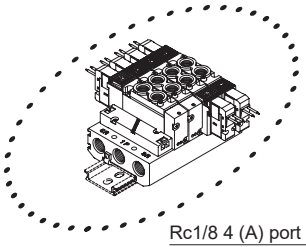

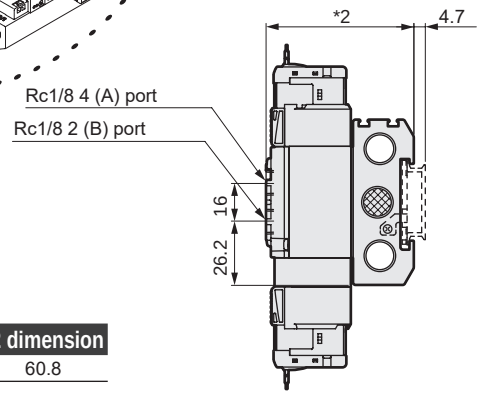

Female thread bore size	*2 dimension
Rc1/8	60.8
1/8NPT	62.1
G1/8	

● E-connector (E)

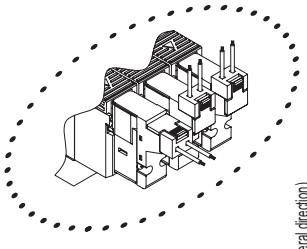

Note: Values in ( ) are for AC voltage.

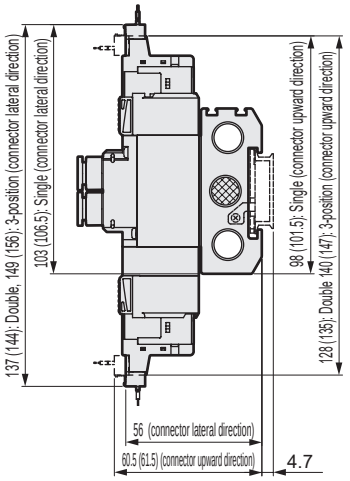

Station No.	2	3	4	5	6	7	8	9	10	11	12	13	14	15	16	17	18	19	20
L	54.0	70.0	86.0	102.0	118.0	134.0	150.0	166.0	182.0	198.0	214.0	230.0	246.0	262.0	278.0	294.0	310.0	326.0	342.0
L_1	42.0	58.0	74.0	90.0	106.0	122.0	138.0	154.0	170.0	186.0	202.0	218.0	234.0	250.0	266.0	282.0	298.0	314.0	330.0
L_2	100.0	112.5	137.5	150.0	162.5	175.0	200.0	212.5	225.0	250.0	262.5	275.0	287.5	312.5	325.0				
L_3	87.5	100.0	125.0	137.5	150.0	162.5	187.5	200.0	212.5	237.5	250.0	262.5	275.0	300.0	312.5				

Dimensions

● EJ-connector (E**J)

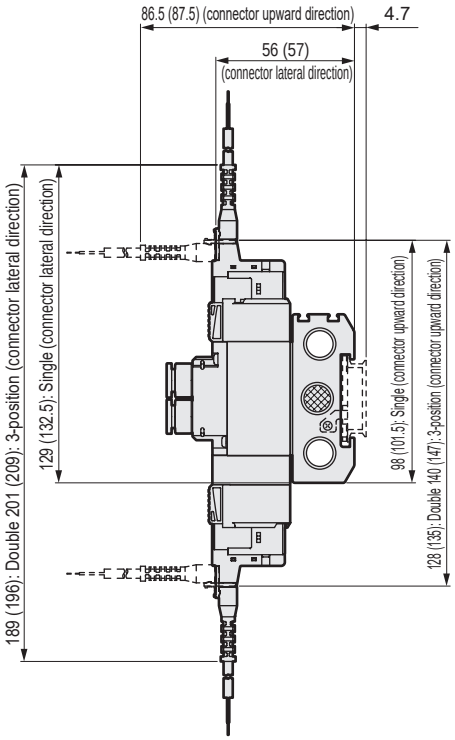

Note: Values in ( ) are for AC voltage.

● DIN terminal box (B)

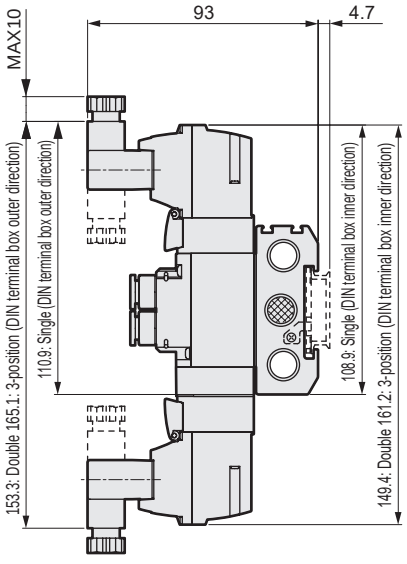

Note: DIN terminal box assembly is shipped facing inward.

Dimensions CAD

M4GA2

● External pilot (K)
Grommet lead wire (blank)

* For the 2-position single 3-port valve, either port A or port B is a plug.
* Refer to page 854 for mounting hole details.

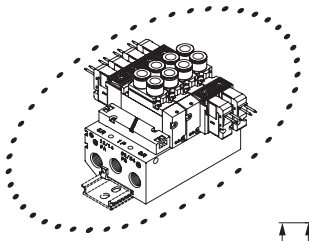

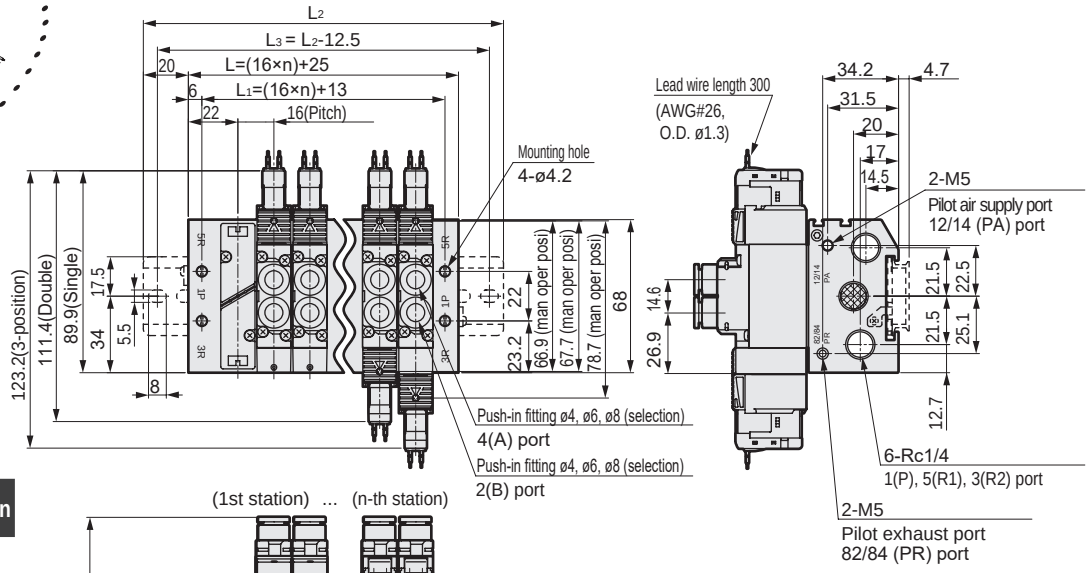

Push-in fitting Bore size	*1 dimension
ø4	91
ø6	
ø8	
ø1/4"	91.9
ø5/16"	91.2

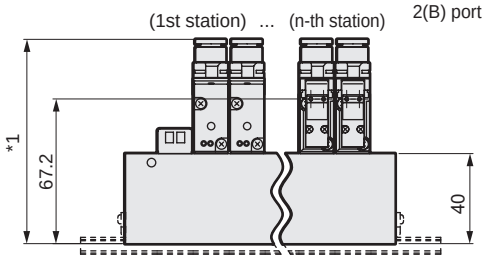

● External pilot (K)
Rc1/8 female thread (06)

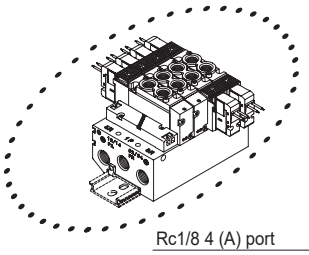

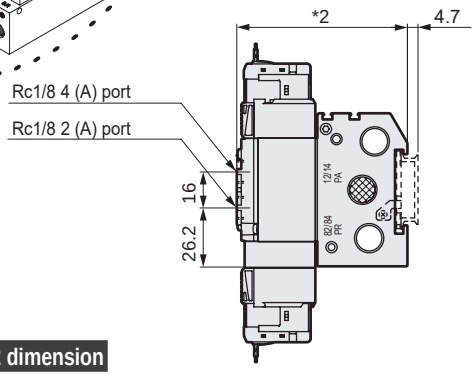

Female thread bore size	*2 dimension
Rc1/8	75.8
1/8NPT	77.1
G1/8	

● External pilot (K)
E-connector (E)

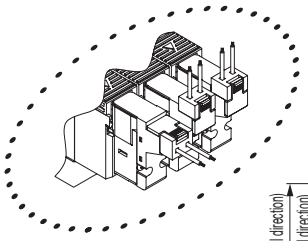

Note: Values in ( ) are for AC voltage.

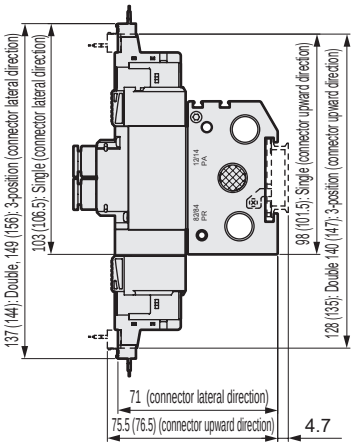

Station No.	2	3	4	5	6	7	8	9	10	11	12	13	14	15	16	17	18	19	20
L	57.0	73.0	89.0	105.0	121.0	137.0	153.0	169.0	185.0	201.0	217.0	233.0	249.0	265.0	281.0	297.0	313.0	329.0	345.0
L_1	45.0	61.0	77.0	93.0	109.0	125.0	141.0	157.0	173.0	189.0	205.0	221.0	237.0	253.0	269.0	285.0	301.0	317.0	333.0
L_2	100.0	125.0	137.5	150.0	162.5	187.5	200.0	212.5	225.0	250.0	262.5	275.0	300.0	312.5	325.0				
L_3	87.5	112.5	125.0	137.5	150.0	175.0	187.5	200.0	212.5	237.5	250.0	262.5	287.5	300.0	312.5				

Dimensions

● External pilot (K)
EJ-connector (E**J)

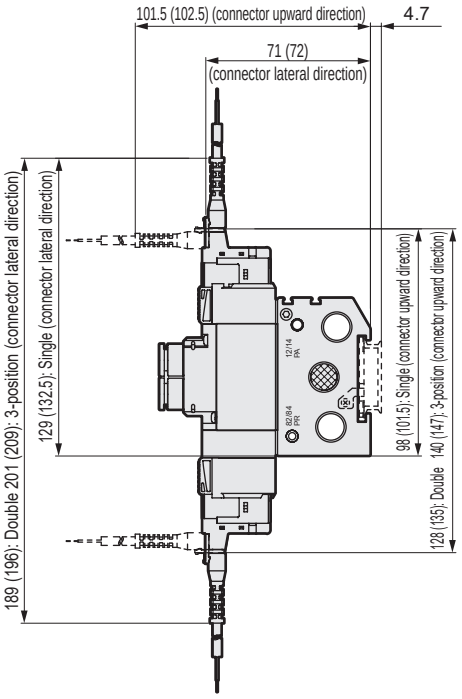

Note: Values in ( ) are for AC voltage.

● External pilot (K)
DIN terminal box (B)

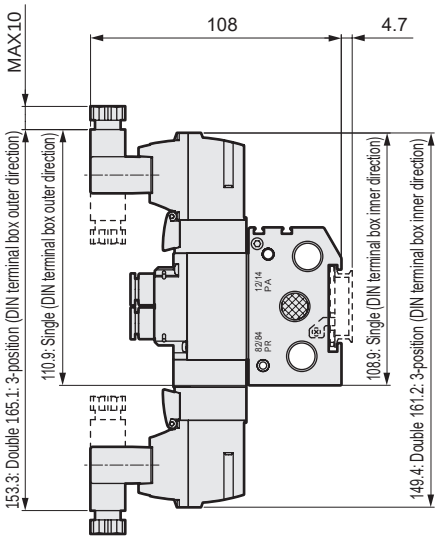

Note: DIN terminal box assembly is shipped facing inward.

Dimensions CAD

M4GA3

● Grommet lead wire (blank)

* For the 2-position single 3-port valve, either port A or port B is a plug.
* Refer to page 854 for mounting hole details.

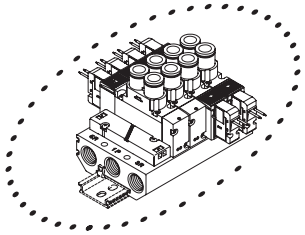

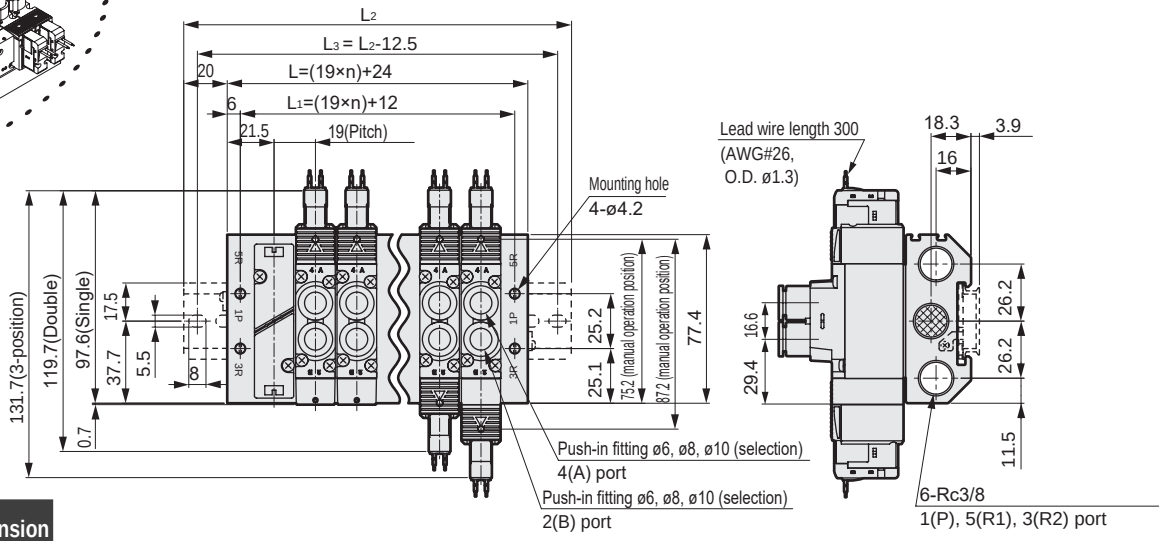

Push-in fitting Bore size	*1 dimension
ø6	82.8
ø8	
ø10	88.3
ø5/16"	89
ø3/8"	92.2

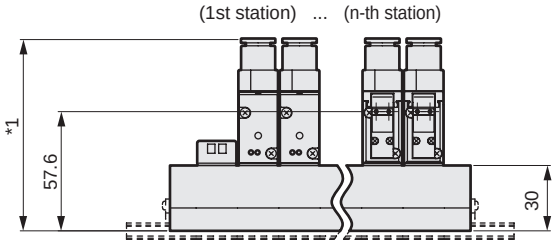

● Rc1/4 female thread (08)

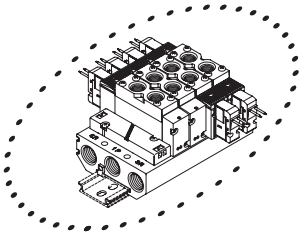

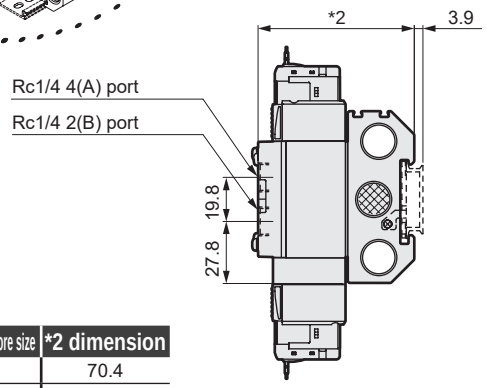

Female thread bore size	*2 dimension
Rc1/4	70.4
1/4NPT	70.9
G1/4	70.9

● E-connector (E)

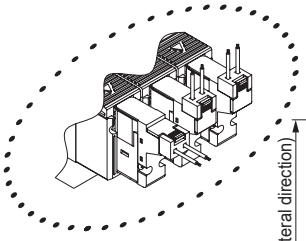

Note: Values in ( ) are for AC voltage.

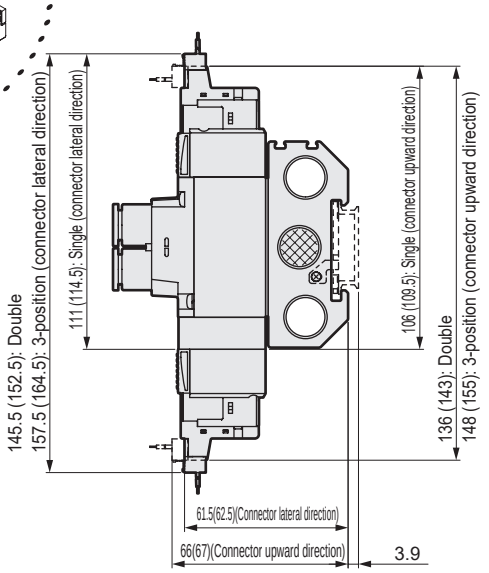

Station No.	2	3	4	5	6	7	8	9	10	11	12	13	14	15	16	17	18	19	20
L	62.0	81.0	100.0	119.0	138.0	157.0	176.0	195.0	214.0	233.0	252.0	271.0	290.0	309.0	328.0	347.0	366.0	385.0	404.0
L1	50.0	69.0	88.0	107.0	126.0	145.0	164.0	183.0	202.0	221.0	240.0	259.0	278.0	297.0	316.0	335.0	354.0	373.0	392.0
L2	112.5	125.0	150.0	162.5	187.5	200.0	225.0	237.5	262.5	275.0	300.0	312.5	337.5	350.0	375.0				
L3	100.0	112.5	137.5	150.0	175.0	187.5	212.5	225.0	250.0	262.5	287.5	300.0	325.0	337.5	362.5				

Dimensions

● EJ-connector (E**J)

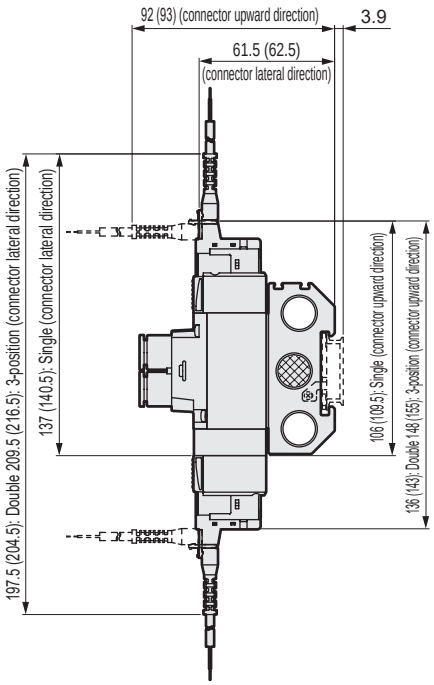

Note: Values in ( ) are for AC voltage.

● DIN terminal box (B)

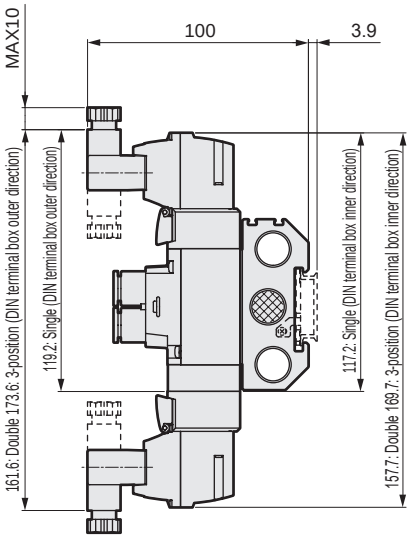

Note: DIN terminal box assembly is shipped facing inward.

Dimensions CAD

M4GA3

● External pilot (K)
Grommet lead wire (blank)

* For the 2-position single 3-port valve, either port A or port B is a plug.
* Refer to page 854 for mounting hole details.

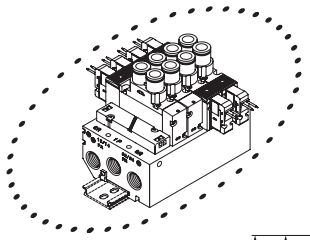

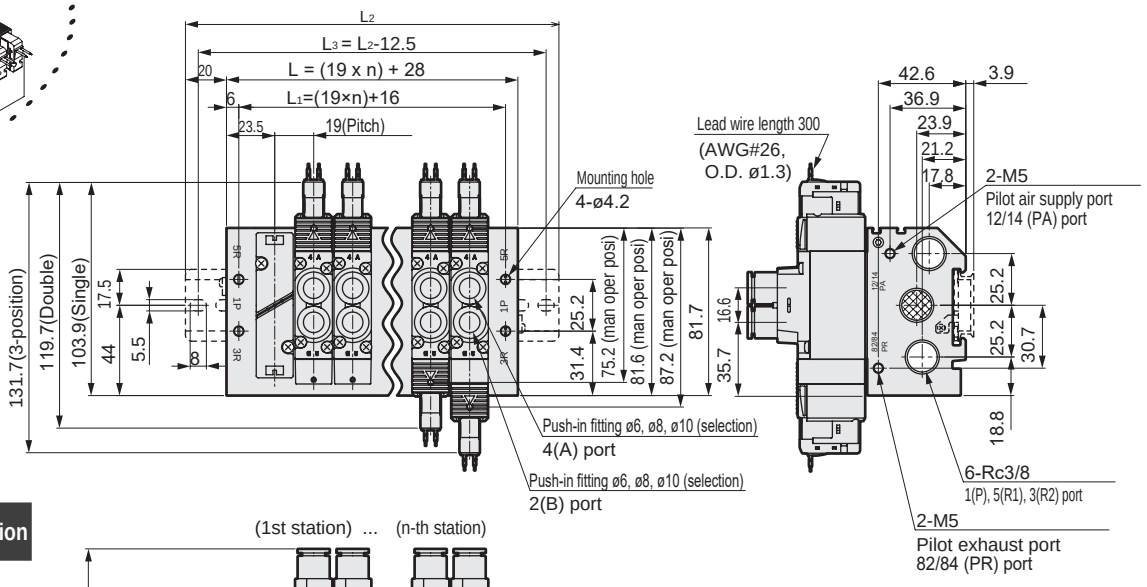

Push-in fitting Bore size	*1 dimension
ø6	100.8
ø8	
ø10	106.3
ø5/16"	107
ø3/8"	110.2

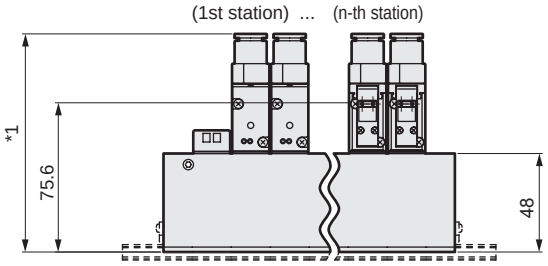

● External pilot (K)
Rc1/4 female thread (08)

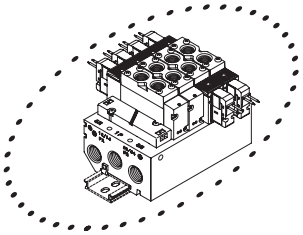

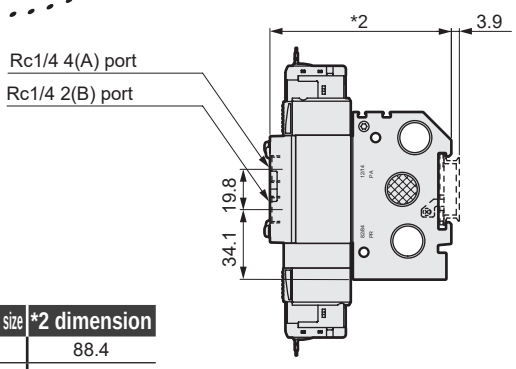

Female thread bore size	*2 dimension
Rc1/4	88.4
NPT1/4	88.9
G1/4	88.9

● External pilot (K)
E-connector (E)

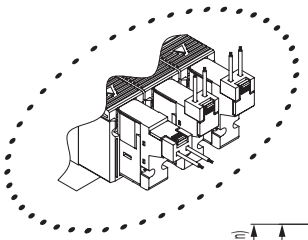

Note: Values in ( ) are for AC voltage.

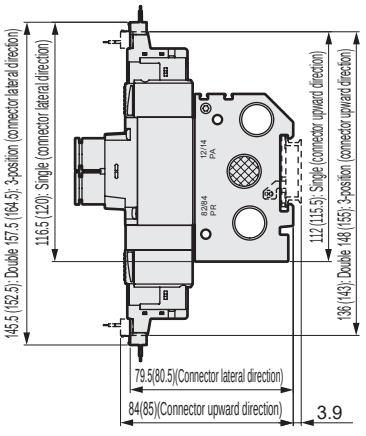

Station No.	2	3	4	5	6	7	8	9	10	11	12	13	14	15	16	17	18	19	20
L	66.0	85.0	104.0	123.0	142.0	161.0	180.0	199.0	218.0	237.0	256.0	275.0	294.0	313.0	332.0	351.0	370.0	389.0	408.0
L1	54.0	73.0	92.0	111.0	130.0	149.0	168.0	187.0	206.0	225.0	244.0	263.0	282.0	301.0	320.0	339.0	358.0	377.0	396.0
L2	112.5	125.0	150.0	175.0	187.5	212.5	225.0	250.0	262.5	287.5	300.0	325.0	337.5	362.5	375.0				
L3	100.0	112.5	137.5	162.5	175.0	200.0	212.5	237.5	250.0	275.0	287.5	312.5	325.0	350.0	362.5				

Dimensions

● External pilot (K)
EJ-connector (E**J)

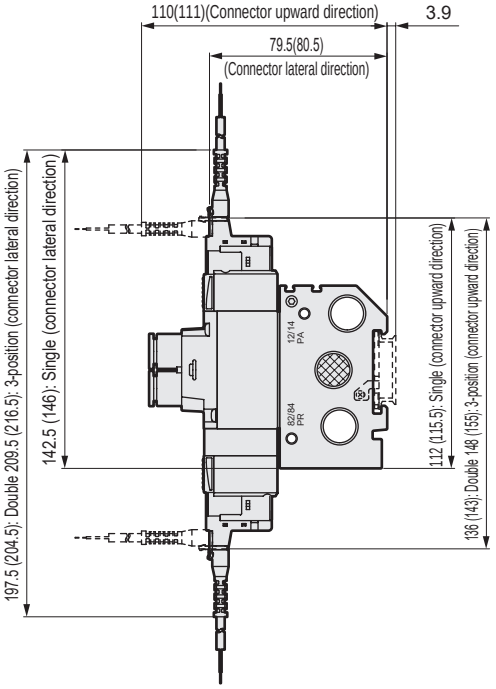

Note:Values in ( ) are for AC voltage.

● External pilot (K)
DIN terminal box (B)

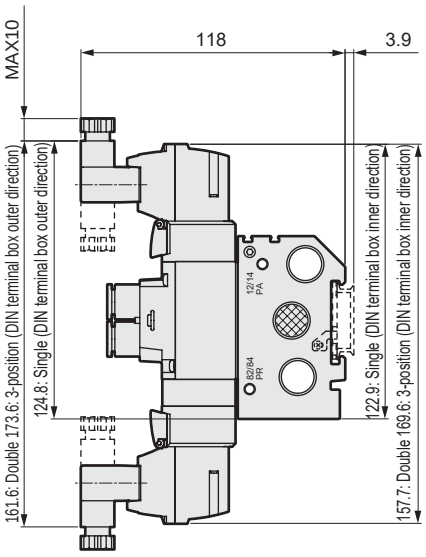

Note: DIN terminal box assembly is shipped facing inward.

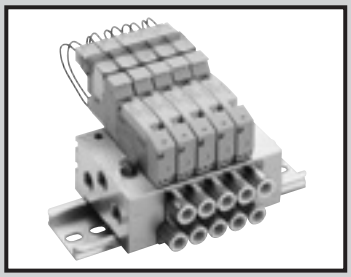

Individual wiring manifold
Base piping
Direct mount/DIN rail mount

M3GB1/2 / M4GB1/2/3-(D) Series

● Cylinder bore size: ø20 to ø100

JIS symbol

● Two 3-port valves integrated

(A side valve: NC, B side valve: NC)

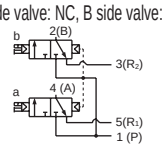

(A side valve: NC, B side valve: NO)

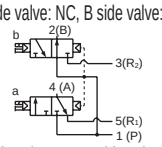

(A side valve: NC, B side valve: NC)

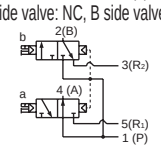

(A side valve: NC, B side valve: NO)

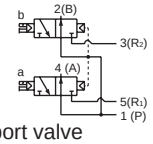

● 5-port valve

2 position single

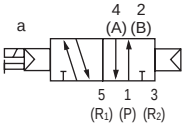

2-position double

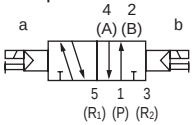

3-position
All ports closed

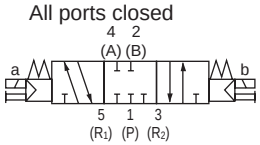

3-position A/B/R connection

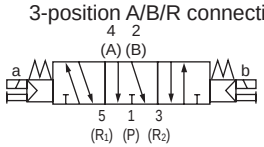

3-position P/A/B connection

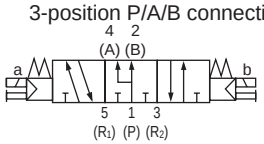

Manifold common specifications

Item		Description
Manifold		Integrated base
Mounting method		Direct mount/DIN rail mount
Air supply and exhaust method		Common supply/common exhaust (With internal exhaust check valve)
Pilot exhaust method	Internal pilot	Main valve/pilot valve common exhaust (Pilot exhaust check valve built-in)
	External pilot	Main valve/pilot valve individual exhaust
Piping direction		Side direction of base
Valve and operation		Pilot operated soft spool valve
Working fluid		Compressed air
Max. working pressure MPa		0.7
Min. working pressure MPa		0.2 (*3)
Proof pressure MPa		1.05
Ambient temperature °C		−5 to 55 (no freezing)
Fluid temperature °C		5 to 55
Manual override		Non-locking/locking common (standard)
Lubrication (*1)		Not required
Degree of protection (*2)		Dust-proof
Vibration resistance m/s^2		50 or less
Shock resistance m/s^2		300 or less
Atmosphere		Cannot be used in corrosive gas environments

*1 Use turbine oil Class 1 ISO VG32 for lubrication. Excessive or intermittent lubrication results in unstable operation.
*2 Avoid dripping water or oil, etc., during use. IP65 (water jet proof) applies for DIN terminal box specifications. However, the specified outer diameter of the cord and tightening torque must be used for fixing in place.
*3 The working pressure range is 0 to 0.7 MPa when the external pilot (option code: K) is selected. Set the external pilot pressure between 0.2 and 0.7 MPa.

Electrical specifications

Item		Description					
Rated voltage V		24 DC	12 DC	5 DC	3 DC	100 AC	200 AC
Voltage fluctuation range		±10%					
Holding current A (*4)	Standard	0.015 (0.017)	0.030 (0.034)	0.072 (0.082)	0.120 (0.136)	0.009 (0.009)	0.006 (0.006)
	Low exoergic/energy circuit	0.005	0.010	-		-	
Power consumption W (*4)	Standard	0.35 (0.40)		0.35 (0.40)		-	
	Low exoergic/energy circuit	0.1		-		-	
Apparent power VA (*4)	Standard	-		-		0.93 (0.98)	1.20 (1.40)
Thermal class		B					
Surge suppressor		Option					
Indicator		Lamp (option)					

*4: Values in ( ) apply when lamp is included. In addition, the type with low exoergic/energy-saving circuit is only available with lamp.

Individual specifications

Item			M3GB1/M4GB1		M3GB2/M4GB2		M4GB3	
			Direct mount	DIN rail mount	Direct mount	DIN rail mount	Direct mount	DIN railLe Mount
Max. station No.		Standard(Internal pilot)	20 stations	16 stations	20 stations	16 stations	20 stations	16 stations
		External pilot	12 stations	12 stations				
Port size	Rc thread, M5	Port A/B	Barbed fitting ø1.8 Push-in fitting ø1.8,ø4,ø6 ø8 (*5) M5		Push-in fitting ø4,ø6,ø8 ø10 (*5) Rc1/8		Push-in fitting ø6,ø8,ø10 Rc1/4	
		Port P/R1/R2	Rc1/8		Rc1/4		Rc3/8	
	NPT thread, M5	Port A/B	Push-in fitting ø1/8", ø5/32" M5		Push-in fitting ø1/4 inch, ø5/16 inch NPT1/8		Push-in fitting ø5/16", ø3/8" NPT1/4 (*5)	
		Port P/R1/R2	NPT1/8		NPT1/4		NPT3/8 (*5)	
	G thread, M5	Port A/B	Push-in fitting ø4,ø6 M5		Push-in fitting ø4,ø6,ø8 G1/8		Push-in fitting ø8,ø10 G1/4	
		Port P/R1/R2	G1/8		G1/4		G3/8	
Manifold base weight calculation formula (n: station No.) g		Standard	35n+61	36n+115	71n+106	73n+134	113n+170	115n+119
		External pilot	35n+106	36n+114	76n+135	78n+166	118n+194	120n+223

Refer to "Cautions for Mounting the DIN Rail" (page 854), and select the manifold.
For 10 or more manifold station No. (5 stations for 4G3), use ports on both sides for air supply and exhaust. The manifold base weight is the value for screw specifications.
*5: Available as made to order.

Performance/characteristics by model

Item			M3GB1/M4GB1		M3GB2/M4GB2		M4GB3	
			ON	OFF	ON	OFF	ON	OFF
Response time ms	Two 3-port valves integrated		9	12	12	29	-	-
	2-position	Single	12	12	19	19	25	28
		Double	9	-	18	-	24	-
	3-position	ABR connection	8	15	17	30	23	45

Values with a lamp/surge suppressor are shown. The response times are values with working pressure of 0.5 MPa at 20°C, without lubrication. They depend on the pressure and the lubricant quality.

Flow characteristics

Model No.	Solenoid position		P→A/B		A/B→R1/R2	
			C[dm³/(s·bar)]	b	C[dm³/(s·bar)]	b
M3GB1 M4GB1	Two 3-port valves integrated		0.86	0.35	1.1 (0.67)	0.22 (0.23)
	2-position		1.1	0.22	1.2 (0.70)	0.20 (0.10)
	3-position	All ports closed	0.98	0.22	1.1 -	0.24 -
		ABR connection	0.97	0.35	1.3 (0.68)	0.22 (0.24)
		PAB connection	1.1	0.38	1.1 -	0.21 -
M3GB2 M4GB2	Two 3-port valves integrated		1.7	0.44	2.1 (1.6)	0.32 (0.30)
	2-position		2.4	0.34	2.7 (1.7)	0.24 (0.31)
	3-position	All ports closed	2.2	0.34	2.4 -	0.29 -
		ABR connection	2.2	0.34	2.8 (1.8)	0.24 (0.27)
		PAB connection	2.4	0.29	2.4 -	0.29 -
M4GB3	2-position		3.5	0.34	3.8 (2.6)	0.11 (0.27)
	3-position	All ports closed	3.1	0.33	3.3 -	0.22 -
		ABR connection	3.0	0.30	3.8 (2.7)	0.11 (0.22)
		PAB connection	3.6	0.36	3.3 -	0.28 -

*1: Effective cross-sectional area S and sonic conductance C are converted as S ≈ 5.0 x C.
*2: Values in ( ) are with the exhaust check valve.

Ozone-proof specifications • Coolant proof specifications

Can be selected with “How to order” Item Ⓔ option “A” on page 115.

Clean-room specifications

● Anti-dust generation structure for use in cleanrooms

** - Voltage - **P7***

Specifications for rechargeable battery (Catalog No. CC-1226A)

● For use in the rechargeable battery manufacturing process, materials used for air path and sliding section are limited

** - Voltage - **P4**

CE marking specifications

** - Voltage - **ST**

• Standard voltage of 24 VDC or less is CE marking-compatible even if the model No. is not indicated with "ST".

How to order

Manifold model No.

M 4GB1 1 0R - C6 - E2 H D - ○ - 3

3-port manifold model No.

M 3GB1 66 0R - C6 - E2 H D - ○ - 3

● Single valve for mounting base

4GB1 1 9R - 00 - E2 H — 3

● 3-port discrete valve for mounting base

3GB1 66 9R - 00 - E2 H — 3

- 3GB1 66 9R: A Model No.
- 00: B Solenoid position
- E2 H: C Port size (*3) (*4)
- D: Electrical connections
- H: E Option
- D: F Mount type
- 3: G Station No.
- 3: H Voltage

* Be sure to fill in the "Manifold specifications sheet" (pages 210 to 212).

Code	Description		A Model No. 3GB1	3GB2	4GB1	4GB2	4GB3
B Solenoid position							
1	2 position single				●	●	●
2	2-position double				●	●	●
3	3-position all ports closed				●	●	●
4	3-position ABR connection				●	●	●
5	3-position PAB connection				●	●	●
66	3-port valve Two valves integrated (*1)(*2)	A valve side: Normally closed B valve side: Normally closed	●	●			
67		A valve side: Normally closed B valve side: Normally open	●	●			
76		A valve side: Normally open B valve side: Normally closed	●	●			
77		A valve side: Normally open B valve side: Normally open	●	●			
8	Mix manifold (when there are multiple solenoid positions)		●	●	●	●	●

C Port size							
Port	4(A)/2(B) port		P/R1/R2 port (2) = Rc1/8 (3) = Rc1/4 (4) =Rc3/8				
CF	ø1.8 barbed fitting (compatible tube UP-9102-**)		②		②		
C18	ø1.8 push-in fitting (compatible tube UP-9402-**)		②		②		
C4	ø4 push-in fitting		②	③	②	③	
C6	ø6 push-in fitting		②	③	②	③	④
C8	ø8 push-in fitting	(*5) (*6)	②	③	②	③	④
C10	ø10 push-in fitting	(*5)(*6)		③		③	④
CL18	ø1.8 push-in L-fitting upward (compatible tube UP-9402-**)				②		
CL4	ø4 push-in L-fitting (upward)				②		
CL6	ø6 push-in L-fitting (upward)				②	③	
CL8	ø8 push-in L-fitting (upward)					③	④
CL10	ø10 push-in L-fitting (upward)						④
CD18	ø1.8 push-in L-fitting downward (compatible tube UP-9402-**)		②		②		
CD4	ø4 push-in L-fitting (downward)		②		②		
CD6	ø6 push-in L-fitting (downward)		②	③	②	③	
CD8	ø8 push-in L-fitting (downward)			③		③	④
CD10	ø10 push-in L-fitting (downward)						④
CX	Push-in fitting mix		②	③	②	③	④
M5	M5		②		②		
06	Rc1/8			③		③	
08	Rc1/4						④
Port	4(A)/2(B) port		P/R1/R2 port (5) = 1/8NPT, (6) = 1/4NPT, (7) = 3/8NPT				
C3N	ø1/8" push-in fitting		⑤		⑤		
C4N	ø5/32" push-in fitting		⑤		⑤		
C6N	ø1/4" push-in fitting			⑥		⑥	
C8N	ø5/16" push-in fitting			⑥		⑥	⑦
C10N	ø3/8" push-in fitting						⑦
CL3N	ø1/8" push-in L-fitting (upward)	(*6)			⑤		
CL4N	ø5/32" push-in L-fitting (upward)	(*6)			⑤		
CL6N	ø1/4" push-in L-fitting upward	(*6)				⑥	
CL8N	Radial ø5/16 push-in fitting (upward)	(*6)				⑥	
CXN	Push-in fitting mix		⑤	⑥	⑤	⑥	⑦
M5N	M5		⑤		⑤		
06 N	NPT1/8			⑥		⑥	
08 N	NPT1/4	(*6)					⑦
Port	4(A)/2(B) port		P/R1/R2 port (8) = G1/8, (9) = G1/4, (10) = G3/8				
C4G	ø4 push-in fitting		⑧	⑨	⑧	⑨	
C6G	ø6 push-in fitting		⑧	⑨	⑧	⑨	
C8G	ø8 push-in fitting			⑨		⑨	⑩
C10G	ø10 push-in fitting						⑩
CL4G	ø4 push-in L-fitting (upward)	(*6)			⑧		
CL6G	ø6 push-in L-fitting (upward)	(*6)			⑧	⑨	
CL8G	ø8 push-in L-fitting (upward)	(*6)				⑨	
CXG	Push-in fitting mix		⑧	⑨	⑧	⑨	⑩
M5G	M5		⑧		⑧		
06G	G1/8			⑨		⑨	
08G	G1/4						⑩
00	Discrete valve for integrated base		●	●	●	●	●

Precautions for model No. selection

*1: Select M4GB*80R when mixing with 3, 5-port valves. Further, select M3GB*80R when mixing with masking plate.
*2: Not compatible with combination with external pilot (K). Dimensions are the same as those of the respective 2-position double solenoid.
3: CL push-in L-fitting is compatible only with the single solenoid manifold. Long elbow is for A port and short elbow for B port.
*4: A and B ports are the same size for push-in L-fitting (upward) (downward).
*5: 4G1 C8 and 4G2 C10 do not support push-in fitting mixing.
*6: Made-to-order product.

			Ⓐ Model No.				
			3GB1	3GB2	4GB1	4GB2	4GB3
Ⓓ Electrical connections							
Blank	Grommet lead wire (300 mm)	(*16)	●	●	●	●	●
B	DIN terminal box (Pg7) with surge suppressor/lamp	(*17)(*19)		●		●	●
BN	DIN terminal box (Pg7) (without terminal box) with surge suppressor	(*17)(*19)		●		●	●
E-connector (upward/lateral common)							
E0	Lead wire (300 mm)	(*18)	●	●	●	●	●
E00	Lead wire (500 mm)	(*18)	●	●	●	●	●
E01	Lead wire (1000 mm)	(*18)	●	●	●	●	●
E02	Lead wire (2000 mm)	(*18)	●	●	●	●	●
E03	Lead wire (3000 mm)	(*18)	●	●	●	●	●
E0N	Without lead wire (without socket)	(*18)	●	●	●	●	●
E1	Without lead wire (socket/terminal attached)	(*18)	●	●	●	●	●
E2	Lead wire (300 mm) with surge suppressor/indicator lamp		●	●	●	●	●
E20	Lead wire (500 mm) with surge suppressor/indicator lamp		●	●	●	●	●
E21	Lead wire (1000 mm) with surge suppressor/indicator lamp		●	●	●	●	●
E22	Lead wire (2000 mm) with surge suppressor/indicator lamp		●	●	●	●	●
E23	Lead wire (3000 mm) with surge suppressor/indicator lamp		●	●	●	●	●
E2N	Without lead wire (without socket) with surge suppressor/indicator lamp		●	●	●	●	●
E3	Without lead wire (socket/terminal attached) with surge suppressor/indicator lamp		●	●	●	●	●
EJ-connector (socket with cover, upward/lateral common)							
E01J	Lead wire (1000 mm)	(*18)	●	●	●	●	●
E02J	Lead wire (2000 mm)	(*18)	●	●	●	●	●
E03J	Lead wire (3000 mm)	(*18)	●	●	●	●	●
E21J	Lead wire (1000 mm) with surge suppressor/indicator lamp		●	●	●	●	●
E22J	Lead wire (2000 mm) with surge suppressor/indicator lamp		●	●	●	●	●
E23J	Lead wire (3000 mm) with surge suppressor/indicator lamp		●	●	●	●	●
Ⓔ Option							
Blank	Non-locking/locking common manual override		●	●	●	●	●
M	Non-locking manual override		●	●	●	●	●
H	With exhaust check valve	(*7)	●	●	●	●	●
K	External pilot	(*8)	●	●	●	●	●
A	Ozone/coolant proof		●	●	●	●	●
S	Surgeless	(*9)	●	●	●	●	●
E	Low exoergic/energy saving circuit	(*9) (*10)	●	●	●	●	●
F	A/B port filter built in	(*11)	●	●	●	●	●
X	Non-locking exhaust structure	(*20)			●	●	
X1	Locking exhaust structure	(*20)			●	●	
Z1	Air supply spacer	(*12)	●	●	●	●	●
Z2	In-stop valve spacer	(*12) (*13)	●	●	●	●	●
Z3	Exhaust spacer	(*12)	●	●	●	●	●
Z6	Spacer pilot check valve	(*12) (*14)			●	●	
Ⓕ Mount type							
Blank	Direct mount	(*15)	●	●	●	●	●
D	DIN rail mount		●	●	●	●	●
Ⓖ Station No.							
2	2 stations		●	●	●	●	●
to	to						
20	Refer to page 112 for the max. station number per model.						
Ⓗ Voltage							
1	100 VACV(rectifier integrated)		●	●	●	●	●
2	200 VAC (rectifier integrated)		●	●	●	●	●
3	24 VDC		●	●	●	●	●
4	12 VDC		●	●	●	●	●
7	3 VDC		○	○	○	○	○
8	5 VDC		○	○	○	○	○

is not available.

○ indicates made to order.

*7 : 3-position all ports closed and PAB connection are not provided with the exhaust check valve specifications (H). Refer to page 851 for details on the exhaust check valve.
*8 : Contact CKD when using a vacuum with the external pilot (K).
9 : E2 type and E2*J type connectors support 12/24 VDC only. In addition, surgeless “S” and low exoergic/energy-saving circuit “E” cannot be selected together.
*10: Surgeless specifications.
*11: A filter is built into the P-port as standard.
*12: Specify the spacer mounting position/quantity in manifold specifications sheet. Stacking of spacers is not possible. Combination with the masking plate is not supported. Refer to pages 188 to 192 for details.
*13: Not compatible with combination with external pilot (K).
*14: Combination with push-in L-fittings (upward) is not supported.
*15: The direct mount of M4GB1 cannot be changed to the DIN rail mount after purchasing.
*16: The grommet lead wire specifications are compatible with DC voltage only.
*17: AC voltages and 12/24 VDC are supported. In addition, a lamp comes with the terminal box.
*18: AC voltage is with a rectifier circuit.
*19: The terminal box conforms to EN175301-803 Type C (former DIN 43650-C). Refer to pages 856 and 857 for details.
*20: Compatible only with M4GB1 and M4GB2 solenoid positions 3 and 4.

Electrical connections

Discrete valve/individual wiring manifold

Blank Grommet lead wire

● **Lead wire length**
300 mm

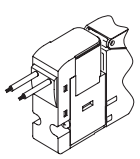

E1 E3 E-connector with socket/terminal

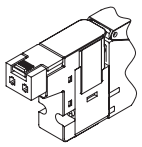

E0 E2 E-connector

● **Lead wire length**
300 mm
500 mm
1000 mm
2000 mm
3000 mm

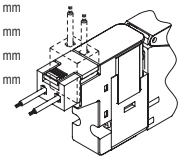

B DIN terminal box

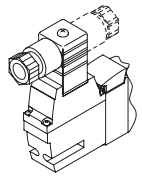

E0N E2N E-connector without socket

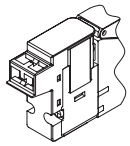

BN DIN terminal box (without terminal box)

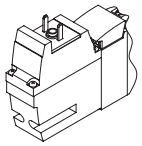

E0*J E2*J EJ-connector

● **Lead wire length**
1m
2m
3m

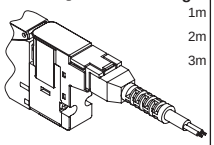

Manifold components explanation and parts list

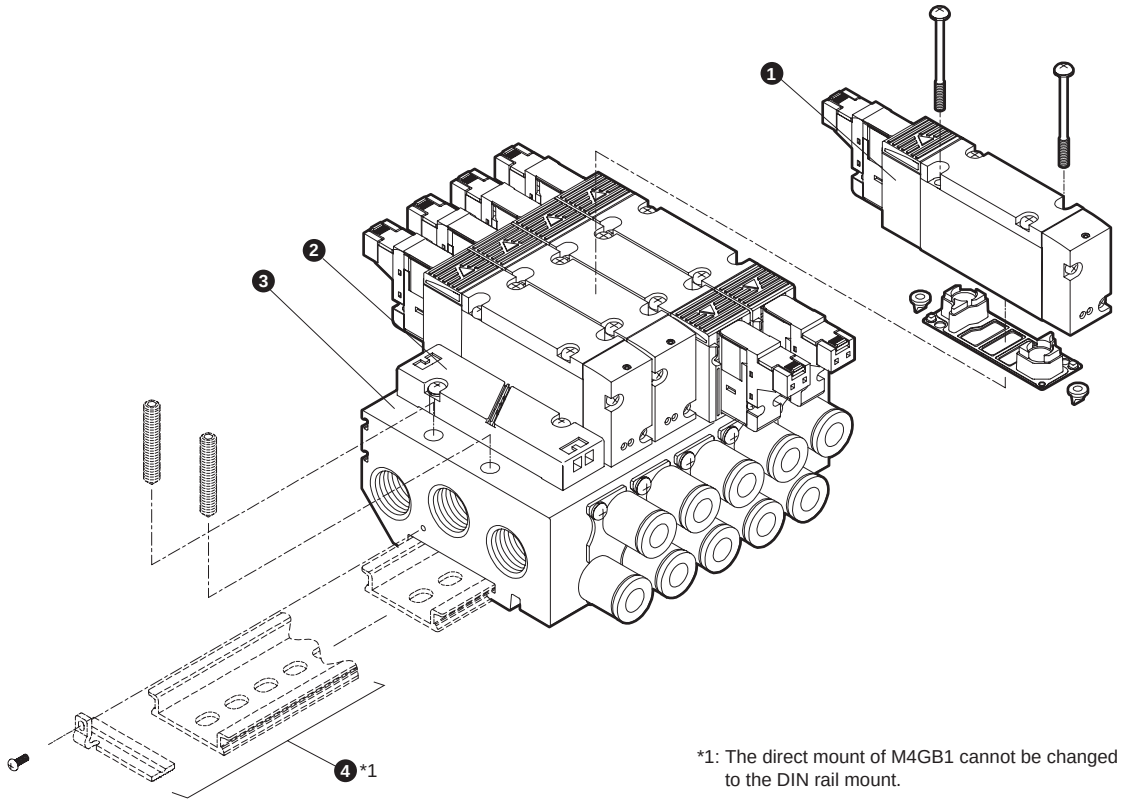

*1: The direct mount of M4GB1 cannot be changed to the DIN rail mount.

Main parts list

No.	Component name		Model No.	Description	Remarks
1	Discrete valve for mounting base		4GB □□9R -00- Electrical connections / Option / Voltage; Solenoid position; Series flow rate size	Discrete valve Gasket 2 mounting screws 2 PR check valves	Details on page 114
2	Masking plate	3G1/4G1	4G1R-MP	Masking plate Gasket 2 mounting screws	* 4G3R-MP has two PR check valves included.
		3G2/4G2	4G2R-MP		
		3G3/4G3	4G3R-MP		
3	Manifold base assembly		M4GB □R- Port size - Option D - Station No.; Series flow rate size; Mount	Manifold base	Only M4GB1R mounting can be selected. Direct mount/DIN rail mount are common for M4GB2R and M4GB3R. DIN rail kit must be ordered separately.
4	DIN rail kit		4GB □R-BAA Rail length - Option D; Series flow rate size		Details on page 200

Parts list

No.	Part name	Model No.
-	Coil assembly	4GR - Electrical connections - □ - COIL - Voltage Blank: Standard A: Ozone/coolant proof S: Surgeless E: Low exoergic/energy saving circuit K: External pilot Select from Ⓓ Electrical connections on page 115
-	E-connector socket assembly	4GR - SOCKET - ASSY - electrical connections - voltage
-	EJ-connector socket assembly	4GR - SOCKET - ASSY - electrical connections

No.	Part name			Model No.
-	Cartridge push-in fitting and related parts	4G1	ø1.8 barbed	4G1R-JOINT-CF
			ø1.8 axial	4G1R-JOINT-C18
			ø4 straight	4G1R-JOINT-C4
			ø6 straight	4G1R-JOINT-C6
			ø8 straight (*1)	4G1R-JOINT-C8
			ø1.8 elbow	4G1R-JOINT-CL18,CLL18
			ø4 elbow	4G1R-JOINT-CL4,CLL4
			ø6 elbow	4G1R-JOINT-CL6,CLL6
			ø1/8” straight	4G1R-JOINT-C3N
			ø5/32” straight	4G1R-JOINT-C4N
			ø1/8” elbow (*2)	4G1R-JOINT-CL3N,CLL3N
			ø5/32” elbow (*2)	4G1R-JOINT-CL4N,CLL4N
			Plug cartridge	4G1R-JOINT-CPG
		4G2	ø4 straight	4G2R-JOINT-C4
			ø6 straight	4G2R-JOINT-C6
			ø8 straight	4G2R-JOINT-C8
			ø10 straight (*3)	4G2R-JOINT-C10
			ø6 elbow	4G2R-JOINT-CL6,CLL6
			ø8 elbow	4G2R-JOINT-CL8,CLL8
			ø1/4” straight	4G2R-JOINT-C6N
			ø5/16” straight	4G2R-JOINT-C8N
			ø1/4” elbow (*2)	4G2R-JOINT-CL6N,CLL6N
			ø5/16” elbow (*2)	4G2R-JOINT-CL8N,CLL8N
			Plug cartridge	4G2R-JOINT-CPG
		4G3	ø6 straight	4G3R-JOINT-C6
			ø8 straight	4G3R-JOINT-C8
			ø10 straight	4G3R-JOINT-C10
			ø8 elbow	4G3R-JOINT-CL8,CLL8
			ø10 elbow	4G3R-JOINT-CL10,CLL10
			ø5/16” straight (*2)	4G3R-JOINT-C8N
			ø3/8” straight (*2)	4G3R-JOINT-C10N

*1: Dedicated part for M4GB1-C8.
*2: Custom order.
*3: Common product with the 4G3 ø10 straight.

Dimensions CAD

M4GB1

● Direct mount installation
Grommet lead wire (blank)

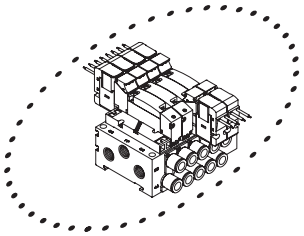

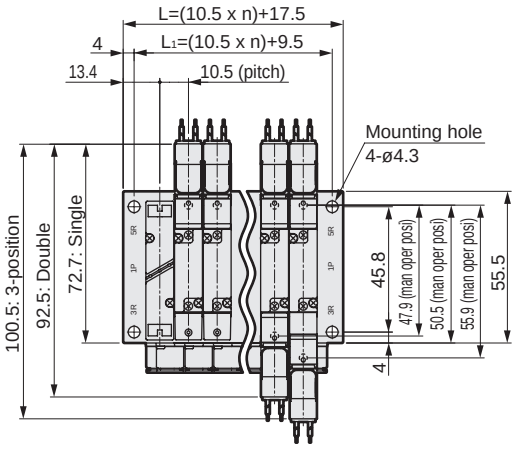

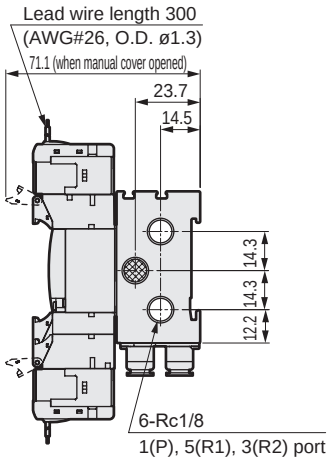

*1: Dedicated for direct mounting.
This cannot be changed to DIN rail specifications.
*2: The two 3-port valve integrated has the same dimensions as the double.

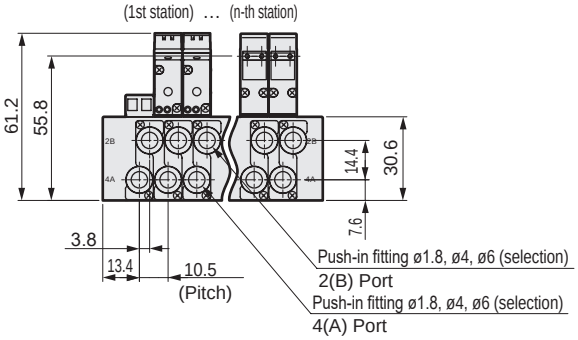

● M5 female thread (M5)

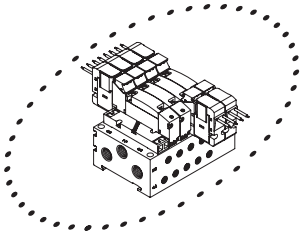

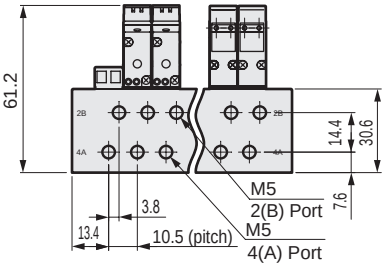

● E-connector (E)

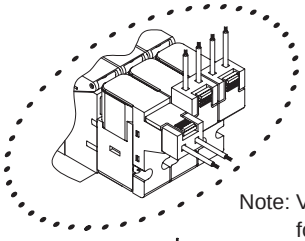

Note: Values in ( ) are for AC voltage.

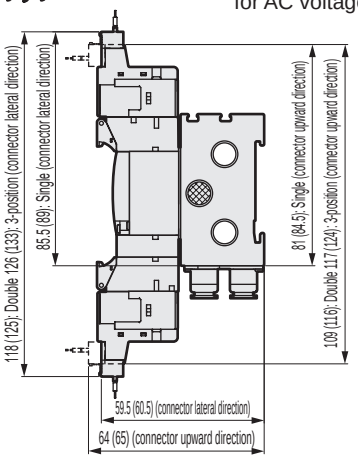

● EJ-connector (E**J)

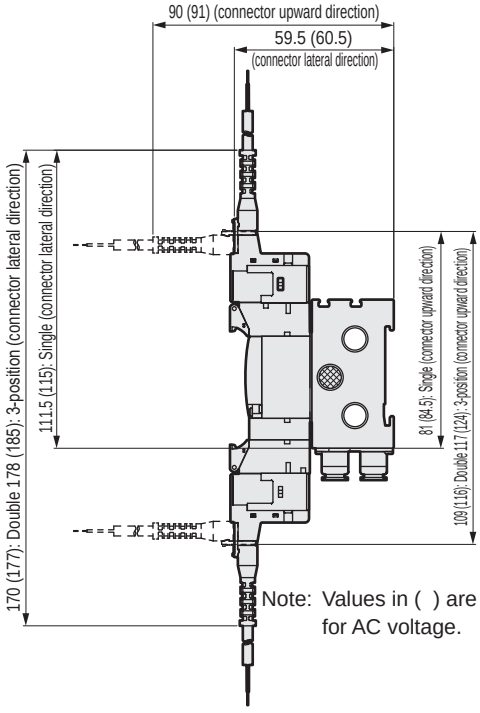

Note: Values in ( ) are for AC voltage.

Stn No.	2	3	4	5	6	7	8	9	10	11	12	13	14	15	16	17	18	19	20
L	38.5	49.0	59.5	70.0	80.5	91.0	101.5	112.0	122.5	133.0	143.5	154.0	164.5	175.0	185.5	196.0	206.5	217.0	227.5
L1	30.5	41.0	51.5	62.0	72.5	83.0	93.5	104.0	114.5	125.0	135.5	146.0	156.5	167.0	177.5	188.0	198.5	209.0	219.5

Dimensions CAD

M4GB1

*1: This can be changed to direct mount specifications.
*2: The two 3-port valve integrated has the same dimensions as the double.

● DIN rail installation (D)
Grommet lead wire (blank)

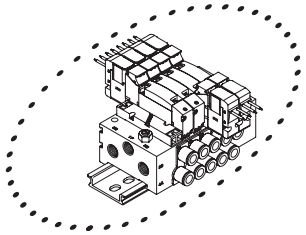

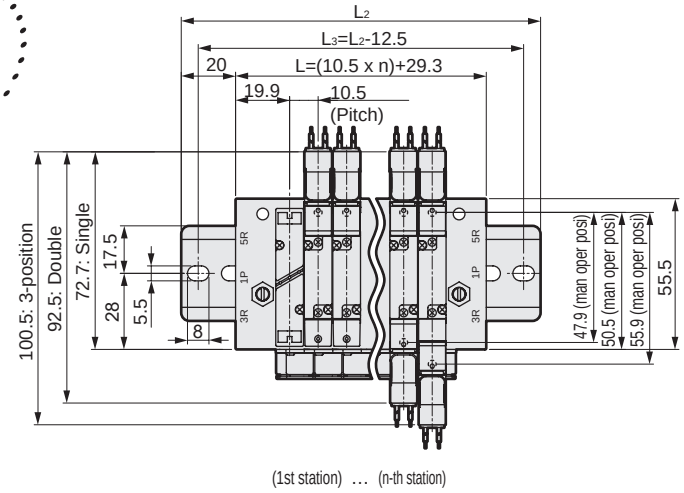

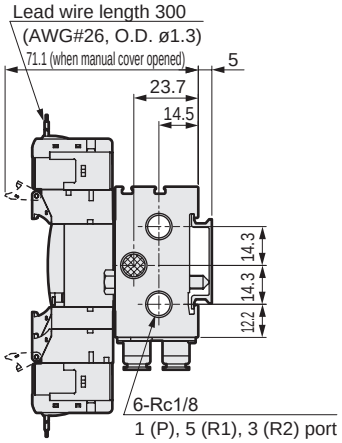

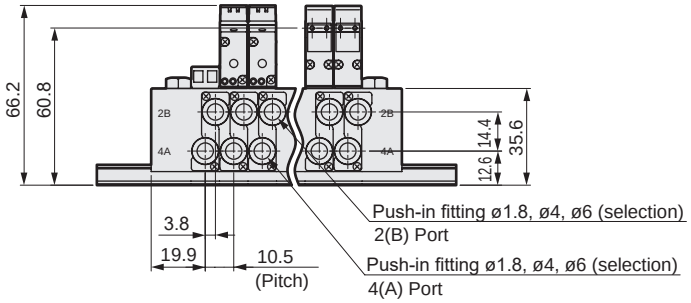

● DIN rail installation (D)
M5 female thread (M5)

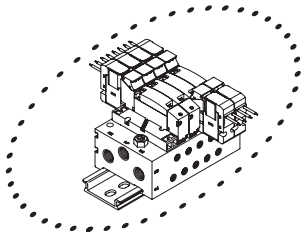

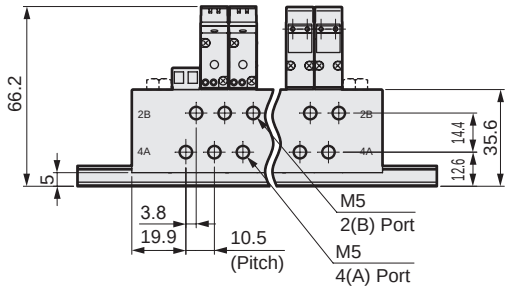

● DIN rail installation (D)
E-connector (E)

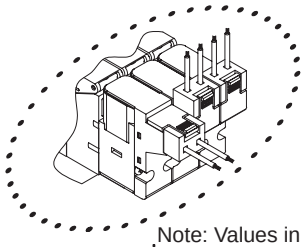

Note: Values in ( ) are for AC voltage.

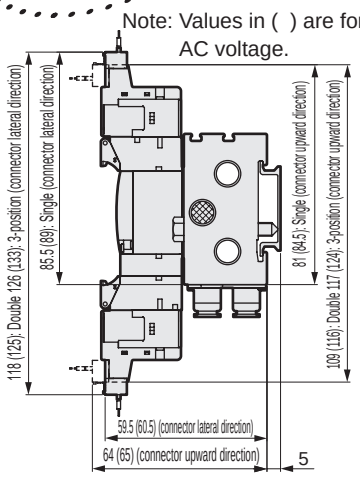

● EJ-connector (E**J)

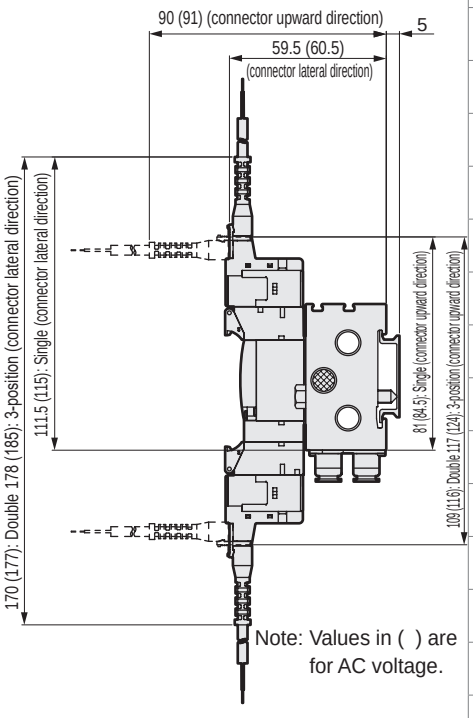

Note: Values in ( ) are for AC voltage.

Stn No.	2	3	4	5	6	7	8	9	10	11	12	13	14	15	16
L	50.3	60.8	71.3	81.8	92.3	102.8	113.3	123.8	134.3	144.8	155.3	165.8	176.3	186.8	197.3
L_2	100.0	112.5	112.5	125.0	137.5	150.0	162.5	175.0	175.0	187.5	200.0	212.5	225.0	237.5	237.5
L_3	87.5	100.0	100.0	112.5	125.0	137.5	150.0	162.5	162.5	175.0	187.5	200.0	212.5	225.0	225.0

Dimensions CAD

M4GB1-C8

Note: Dedicated manifold base.

● Grommet lead wire (blank)

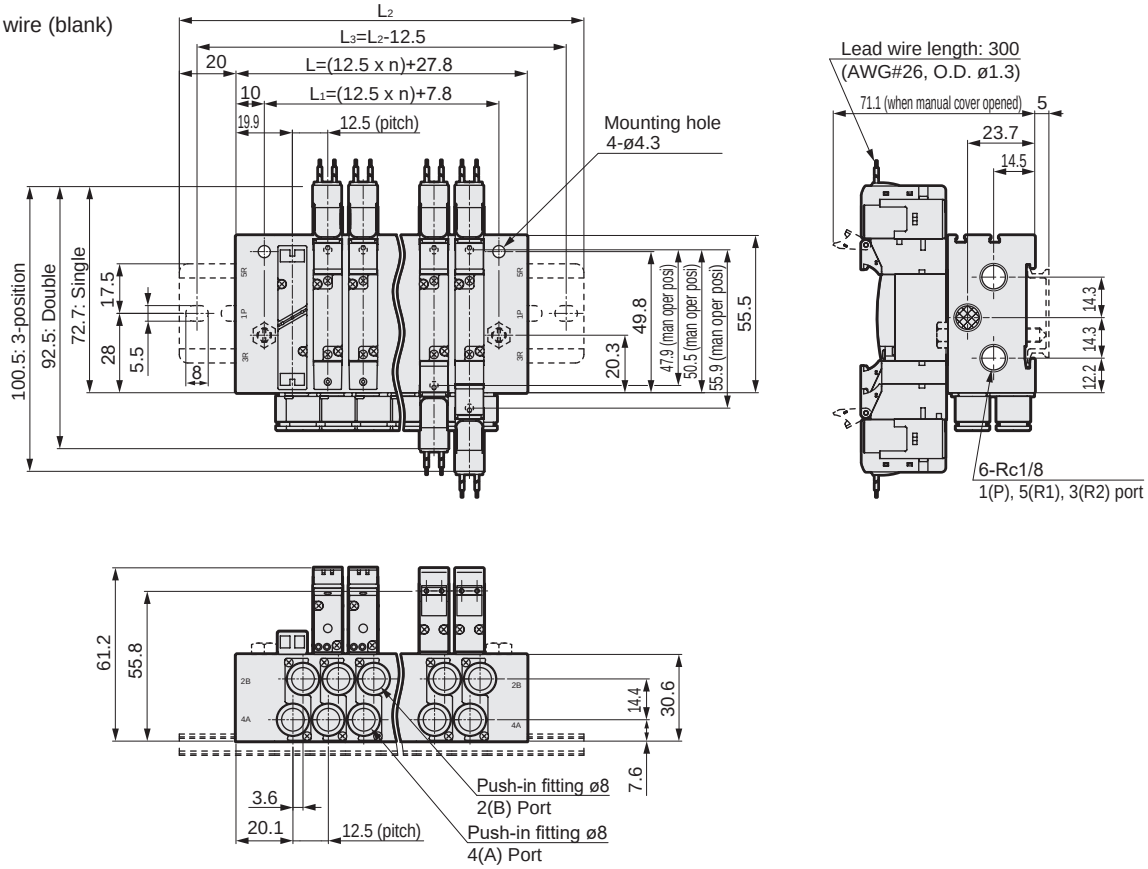

● E-connector (E)

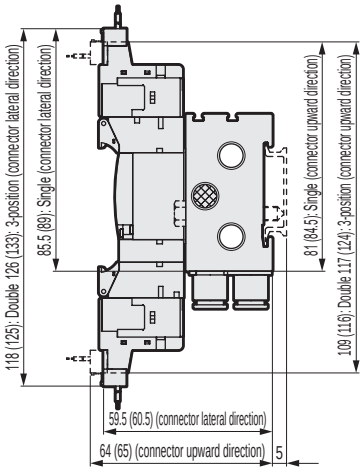

Note: Values in ( ) are for AC voltage.

● EJ-connector (E**J)

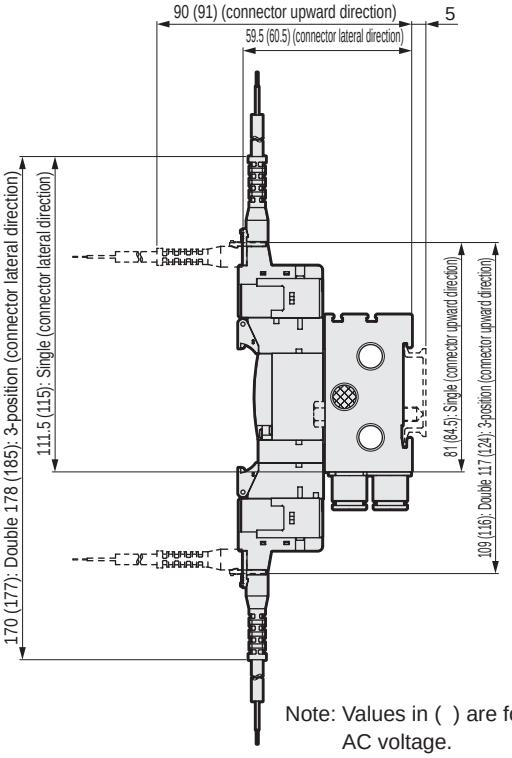

Note: Values in ( ) are for AC voltage.

Stn No.	2	3	4	5	6	7	8	9	10	11	12	13	14	15	16	17	18	19	20
L	52.8	65.3	77.8	90.3	102.8	115.3	127.8	140.3	152.8	165.3	177.8	190.3	202.8	215.3	227.8	240.3	252.8	265.3	277.8
L_1	32.8	45.3	57.8	70.3	82.8	95.3	107.8	120.3	132.8	145.3	157.8	170.3	182.8	195.3	207.8	220.3	232.8	245.3	257.8
L_2	100.0	112.5	125.0	137.5	150.0	162.5	175.0	187.5	200.0	212.5	225.0	237.5	250.0	262.5	275.0				
L_3	87.5	100.0	112.5	125.0	137.5	150.0	162.5	175.0	187.5	200.0	212.5	225.0	237.5	250.0	262.5				

Dimensions

M4GB1

● External pilot (K)
Grommet lead wire (blank)

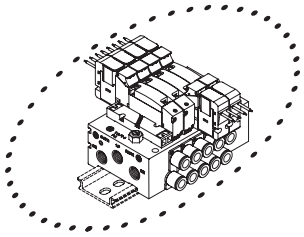

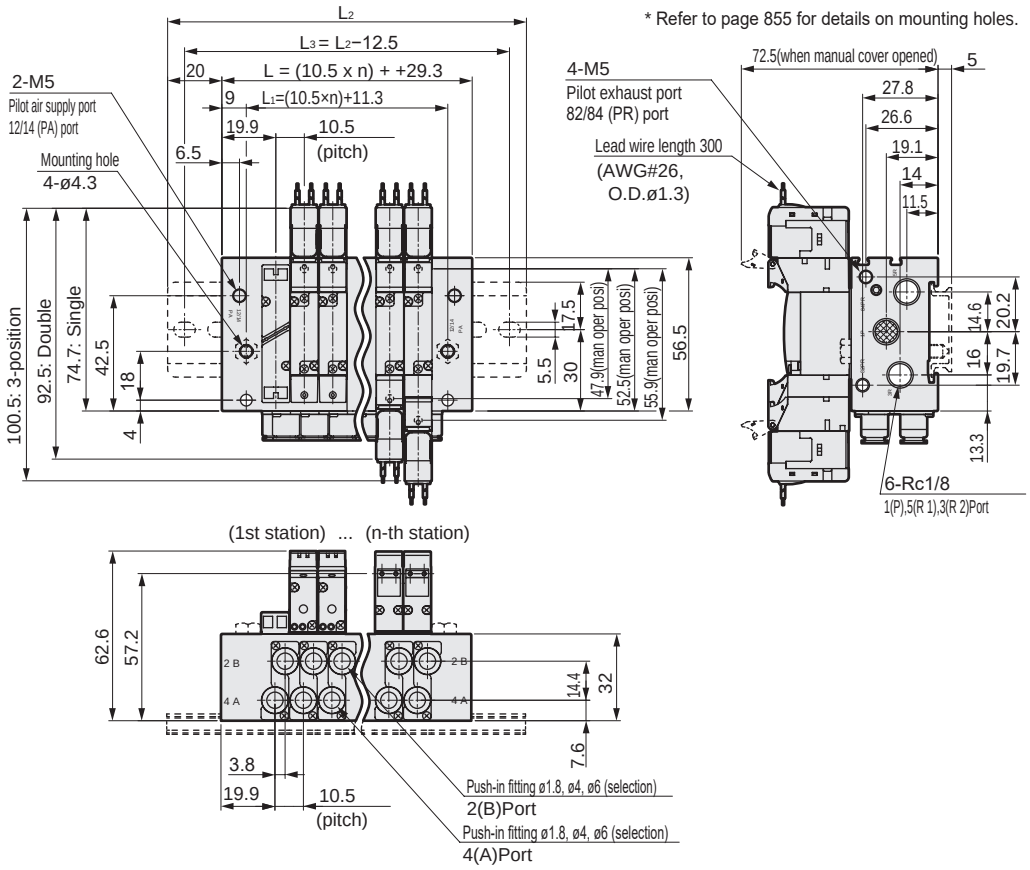

● External pilot (K)
M5 female thread (M5)

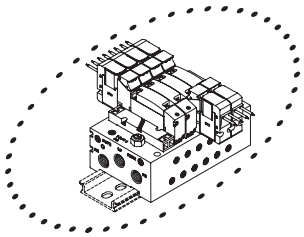

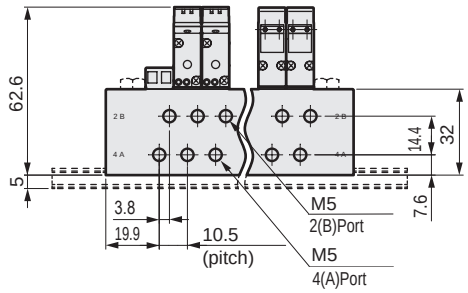

● External pilot (K)
E-connector (E)

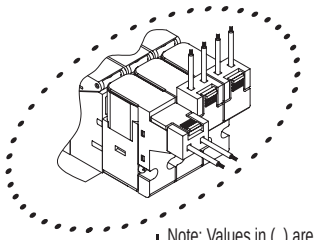

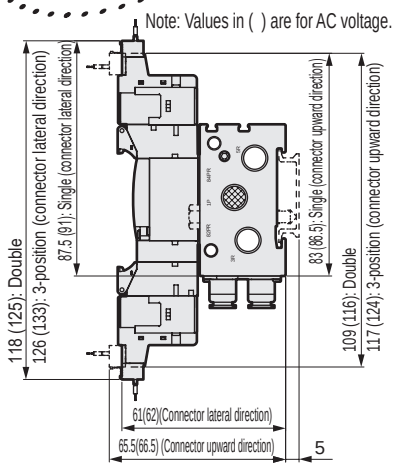

● External pilot (K)
EJ-connector (E**J)

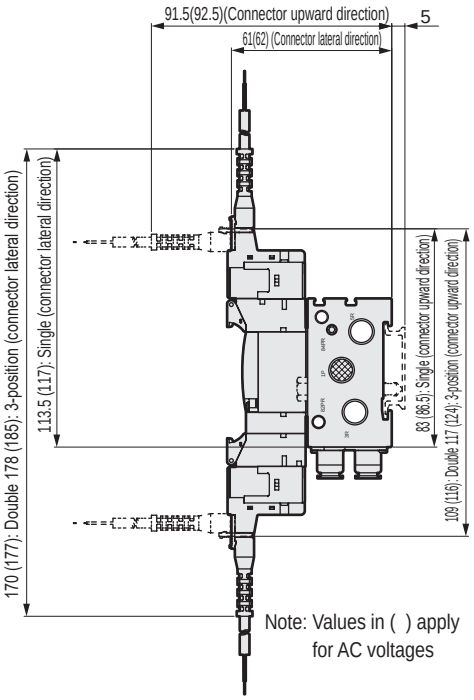

Station No.	2	3	4	5	6	7	8	9	10	11	12
L	50.3	60.8	71.3	81.8	92.3	102.8	113.3	123.8	134.3	144.8	155.3
L_1	32.3	42.8	53.3	63.8	74.3	84.8	95.3	105.8	116.3	126.8	137.3
L_2	100.0	112.5	112.5	125.0	137.5	150.0	162.5	175.0	175.0	187.5	200.0
L_3	87.5	100.0	100.0	112.5	125.0	137.5	150.0	162.5	162.5	175.0	187.5

Dimensions

M4GB1-C8-K

Note: Dedicated manifold base.

* Refer to page 855 for details on mounting holes.

● External pilot (K)

Grommet lead wire (blank)

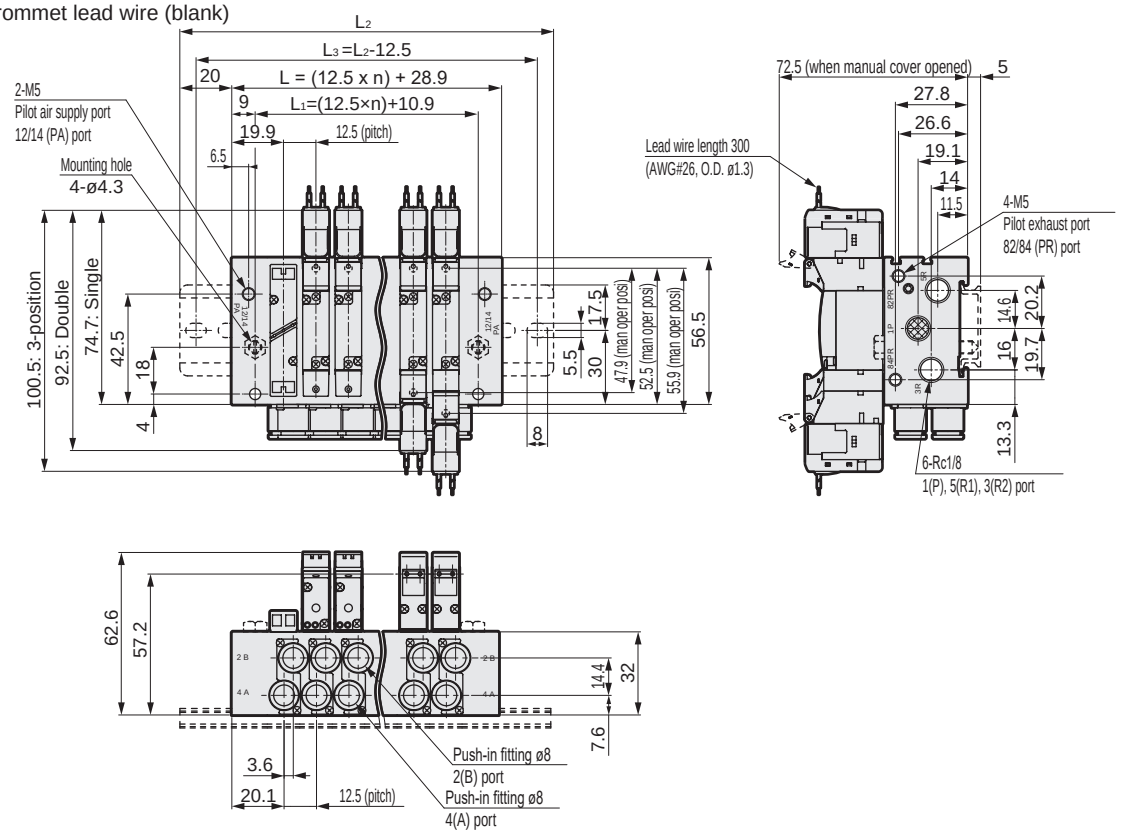

● External pilot (K)

E-connector (E)

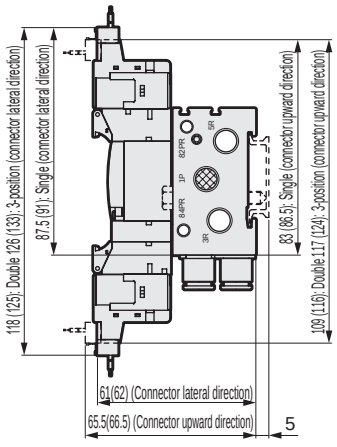

Note: Values in ( ) are for AC voltage.

● External pilot (K)

EJ-connector (E**J)

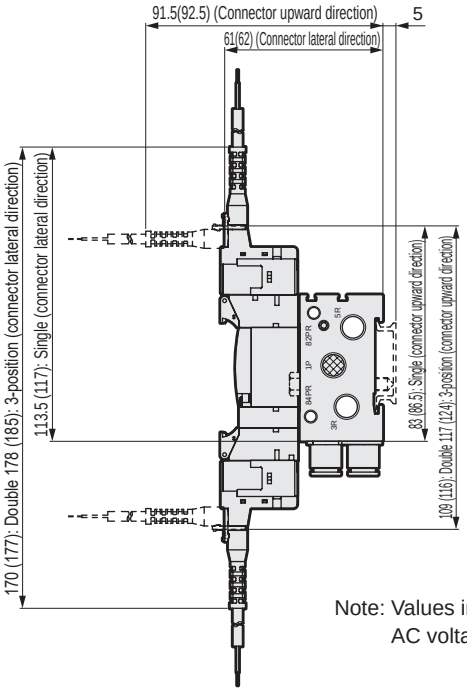

Note: Values in ( ) are for AC voltage.

Station No.	2	3	4	5	6	7	8	9	10	11	12
L	53.9	66.4	78.9	91.4	103.9	116.4	128.9	141.4	153.9	166.4	178.9
L_1	35.9	48.4	60.9	73.4	85.9	98.4	110.9	123.4	135.9	148.4	160.9
L_2	100.0	112.5	125.0	137.5	150.0	162.5	175.0	187.5	200.0	212.5	225.0
L_3	87.5	100.0	112.5	125.0	137.5	150.0	162.5	175.0	187.5	200.0	212.5

Dimensions CAD

● Fitting straight

● ø1.8(CF) ● ø1.8(C18) ● ø4(C4) ● ø6(C6) ● ø8(C8)

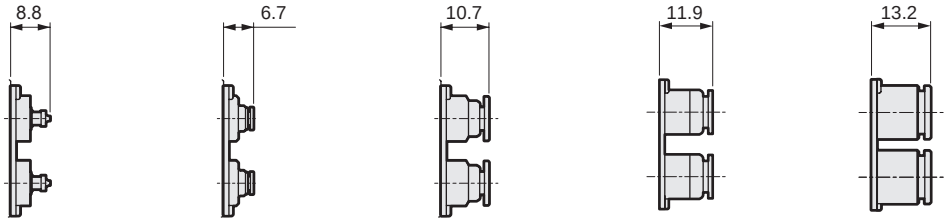

● Fitting straight, single plug

● ø1.8 (CFNC) ● ø1.8 (C18NC) ● ø4 (C4NC) ● ø6 (C6NC) ● ø8 (C8NC) ● ø1.8 (CFNO) ● ø1.8 (C18NO) ● ø4 (C4NO) ● ø6 (C6NO) ● ø8 (C8NO)

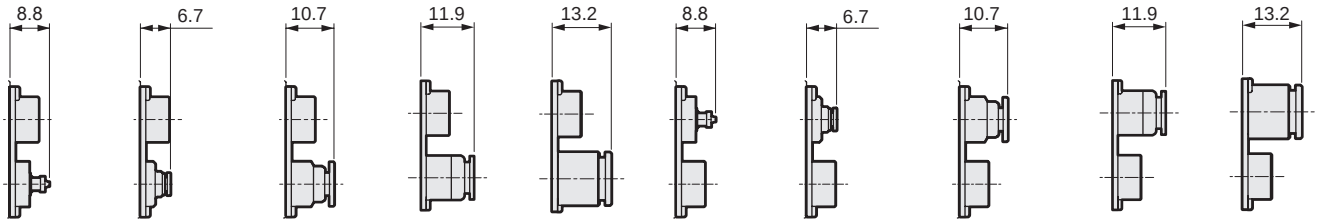

● L-fitting (upward)

● ø1.8(CL18) ● ø4(CL4) ● ø6(CL6)

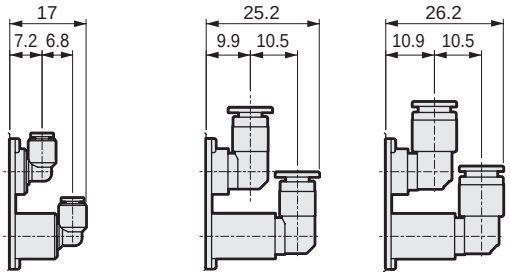

● L-fitting (downward)

● ø1.8(CD18) ● ø4(CD4) ● ø6(CD6)

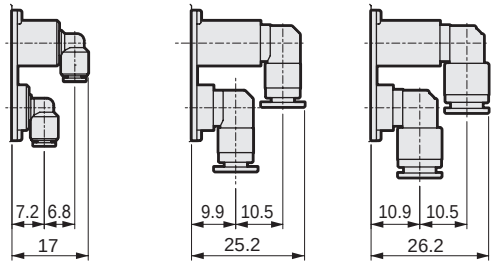

● L-fitting (upward), single plug

● ø1.8(CL18NC) ● ø4(CL4NC) ● ø6(CL6NC) ● ø1.8(CL18NO) ● ø4(CL4NO) ● ø6(CL6NO)

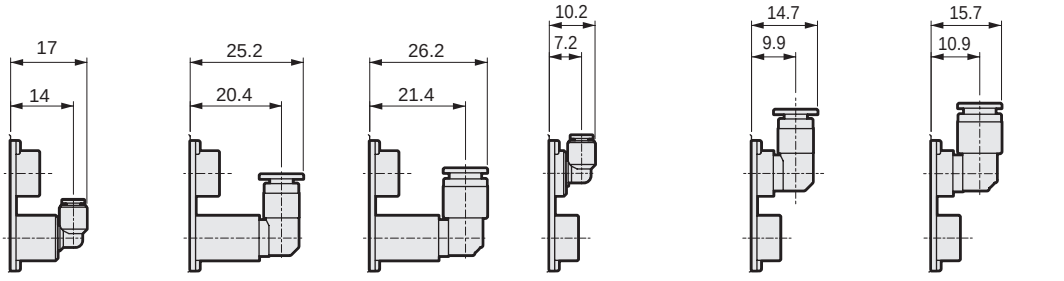

● Push-in L-fitting (downward), single plug

● ø1.8(CD18NC) ● ø4(CD4NC) ● ø6(CD6NC) ● ø1.8(CD18NO) ● ø4(CD4NO) ● ø6(CD6NO)

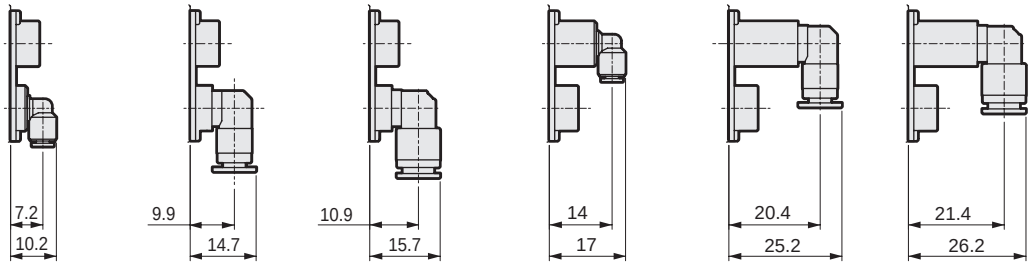

Dimensions

● Fitting straight

● ø1/8" (C3N)

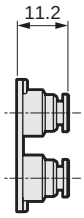

● ø5/32" (C4N)

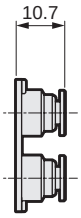

● Fitting straight, single plug

● ø1/8" (C3NCN)

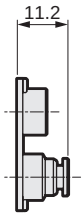

● ø5/32" (C4NCN)

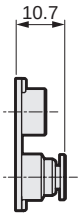

● ø1/8" (C3NON)

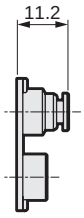

● ø5/32" (C4NON)

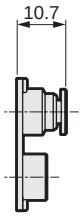

● L-fitting (upward)

● ø1/8" (CL3N)

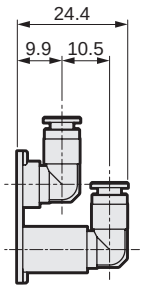

● ø5/32" (CL4N)

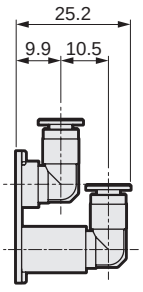

● ø1/8" (CD3N)

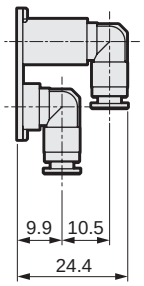

● ø5/32" (CD4N)

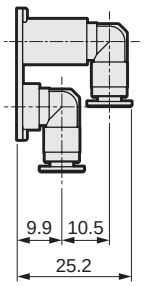

● L-fitting (upward), single plug

● ø1/8" (CL3NCN)

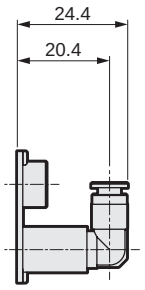

● ø5/32" (CL4NCN)

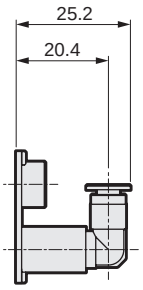

● ø1/8" (CL3NON)

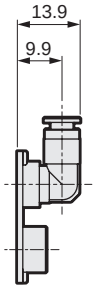

● ø5/32" (CL4NON)

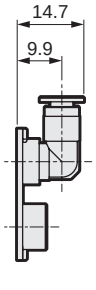

● Push-in L-fitting (downward), single plug

● ø1/8" (CD3NCN)

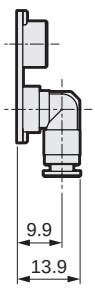

● ø5/32" (CD4NCN)

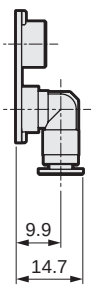

● ø1/8" (CD3NON)

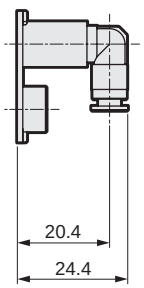

● ø5/32" (CD4NON)

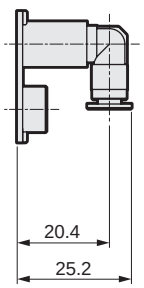

MEMO

Dimensions CAD

M4GB2

● Grommet lead wire (blank)

Note: The two 3-port valve integrated has the same dimensions as the double.
* Refer to page 854 for mounting hole details.

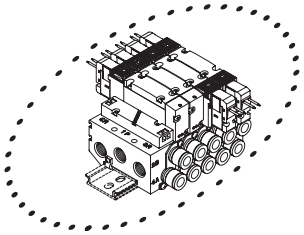

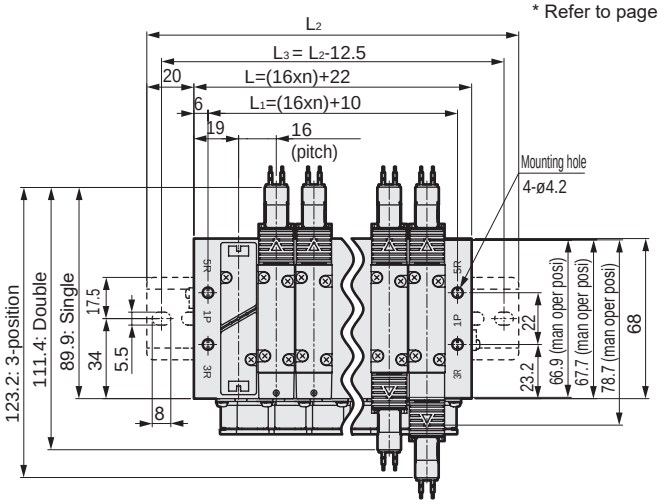

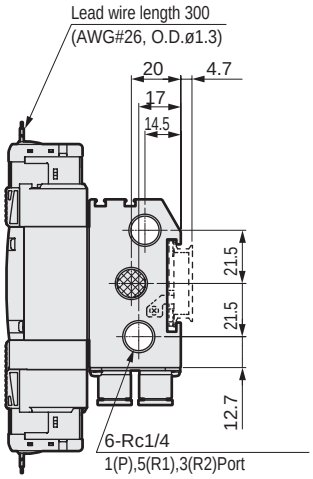

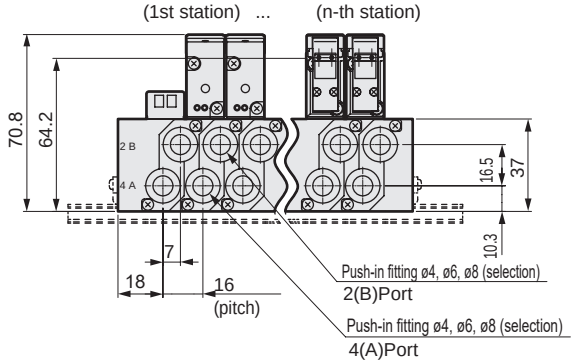

● Rc1/8 female thread (06)

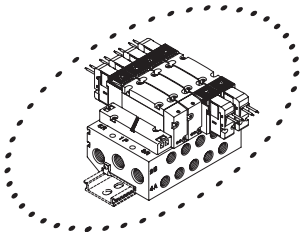

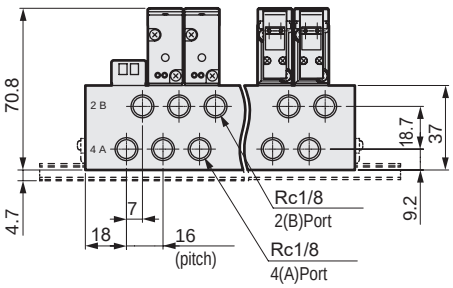

● E-connector (E)

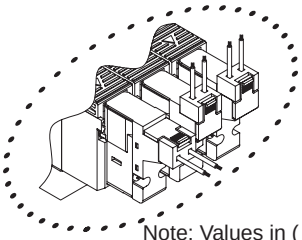

Note: Values in ( ) are for AC voltage.

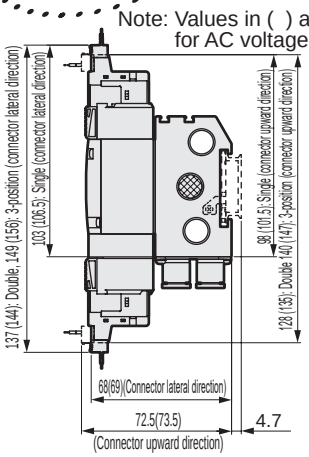

● EJ-connector (E**J)

Note: Values in ( ) are for AC voltage.

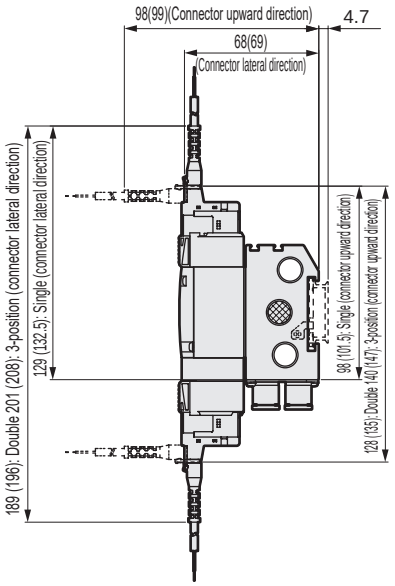

Station No.	2	3	4	5	6	7	8	9	10	11	12	13	14	15	16	17	18	19	20
L	54.0	70.0	86.0	102.0	118.0	134.0	150.0	166.0	182.0	198.0	214.0	230.0	246.0	262.0	278.0	294.0	310.0	326.0	342.0
L_1	42.0	58.0	74.0	90.0	106.0	122.0	138.0	154.0	170.0	186.0	202.0	218.0	234.0	250.0	266.0	282.0	298.0	314.0	330.0
L_2	100.0	112.5	137.5	150.0	162.5	175.0	200.0	212.5	225.0	250.0	262.5	275.0	287.5	312.5	325.0				
L_3	87.5	100.0	125.0	137.5	150.0	162.5	187.5	200.0	212.5	237.5	250.0	262.5	275.0	300.0	312.5				

Dimensions

M4GB2-C10

Note: Dedicated manifold base.

* Refer to page 854 for mounting hole details.

● Grommet lead wire (blank)

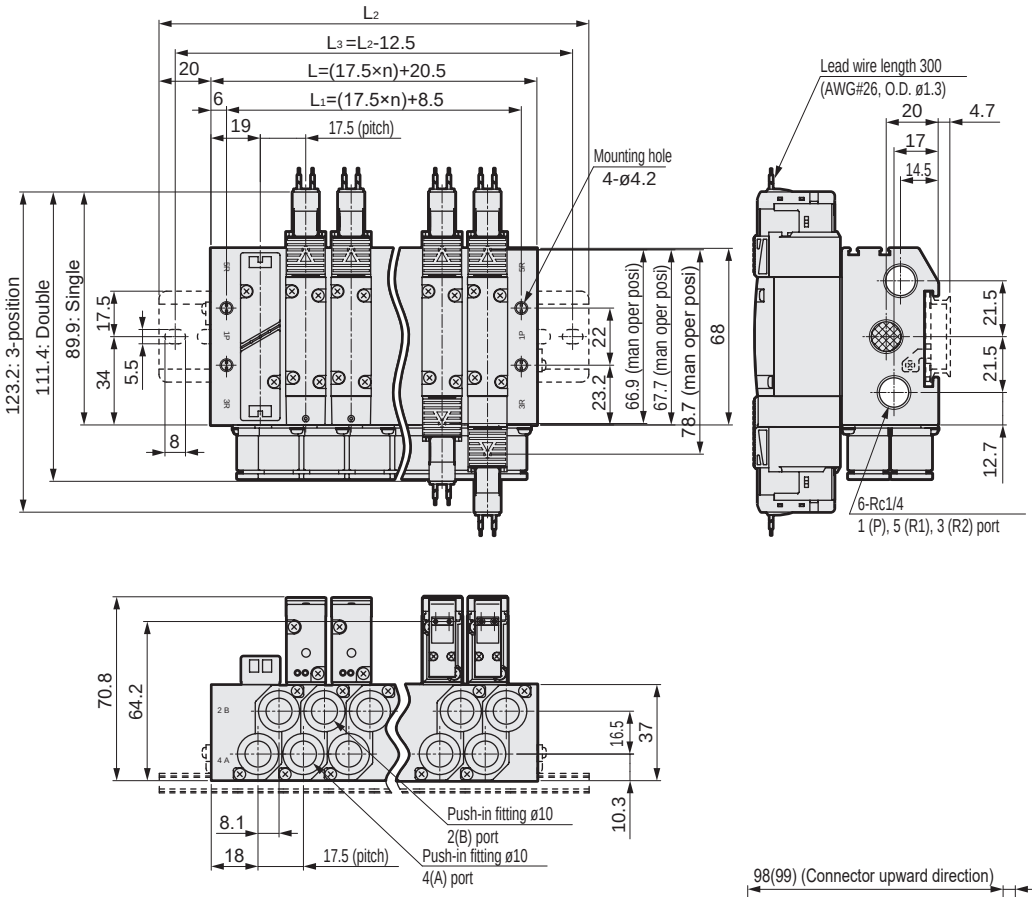

● E-connector (E)

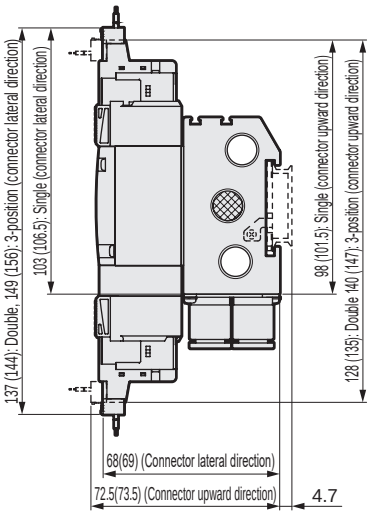

Note: Values in ( ) are for AC voltage.

● EJ-connector (E**J)

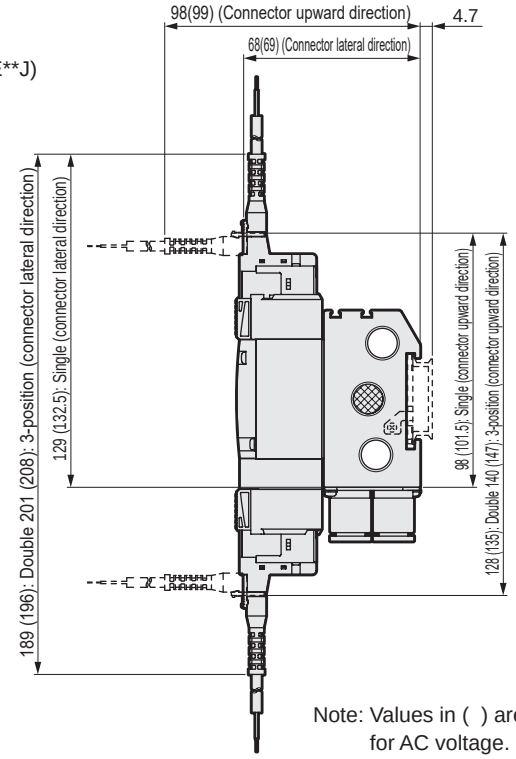

Note: Values in ( ) are for AC voltage.

Station No.	2	3	4	5	6	7	8	9	10	11	12	13	14	15	16	17	18	19	20
L	55.5	73.0	90.5	108.0	125.5	143.0	160.5	178.0	195.5	213.0	230.5	248.0	265.5	283.0	300.5	318.0	335.5	353.0	370.5
L_1	43.5	61.0	78.5	96.0	113.5	131.0	148.5	166.0	183.5	201.0	218.5	236.0	253.5	271.0	288.5	306.0	323.5	341.0	358.5
L_2	100.0	125.0	137.5	150.0	175.0	187.5	212.5	225.0	237.5	262.5	275.0	300.0	312.5	325.0	350.0				
L_3	87.5	112.5	125.0	137.5	162.5	175.0	200.0	212.5	225.0	250.0	262.5	287.5	300.0	312.5	337.5				

Dimensions CAD

M4GB2

* Refer to page 854 for mounting hole details.

● External pilot (K)
Grommet lead wire (blank)

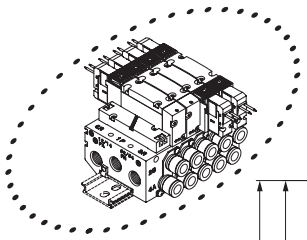

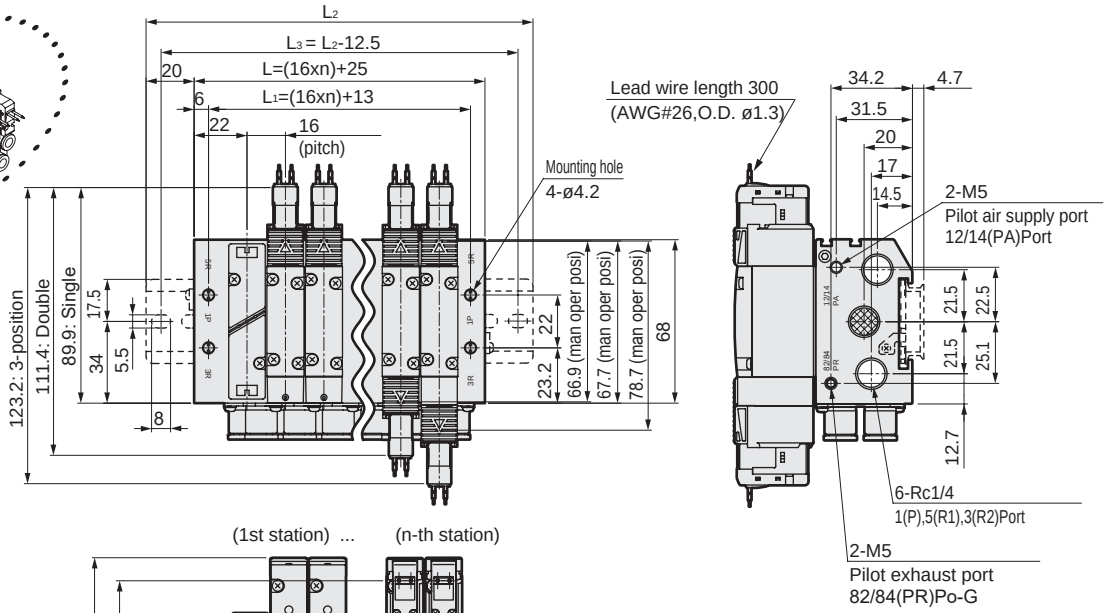

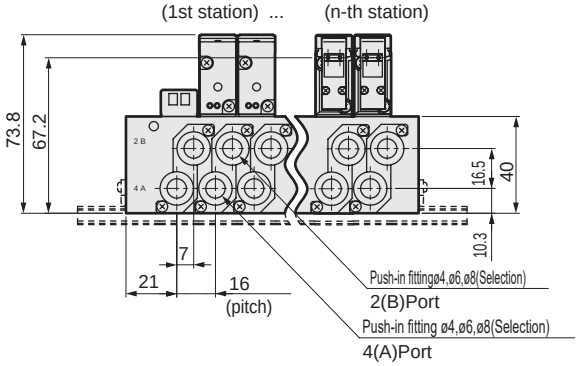

● External pilot (K)
Rc1/8 female thread (06)

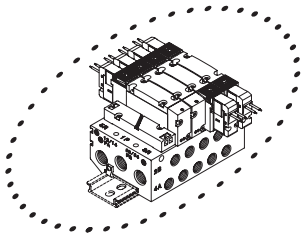

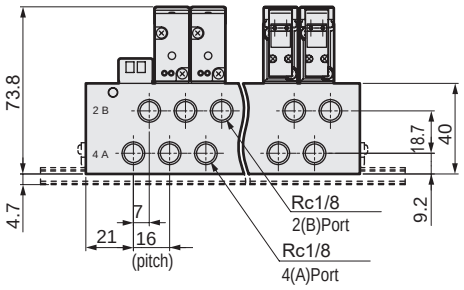

● External pilot (K)
E-connector (E)

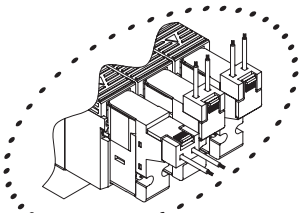

Note: Values in ( ) are for AC voltage.

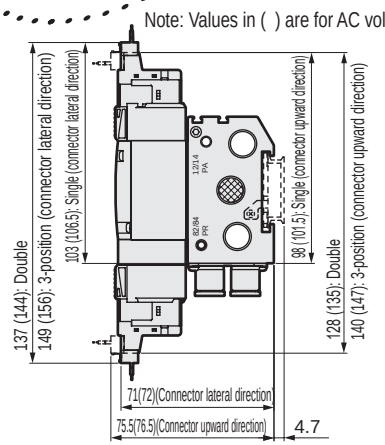

● External pilot (K)
EJ-connector (E**J)

Note: Values in ( ) are for AC voltage.

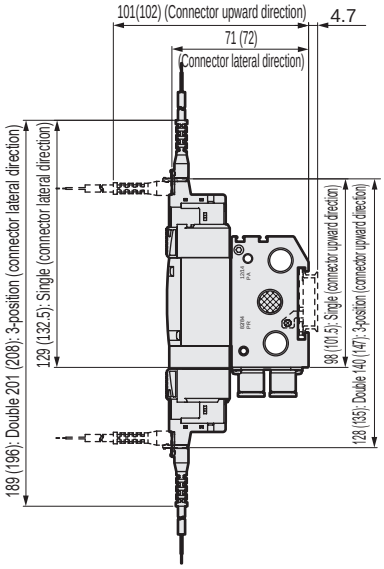

Station No.	2	3	4	5	6	7	8	9	10	11	12	13	14	15	16	17	18	19	20
L	57.0	73.0	89.0	105.0	121.0	137.0	153.0	169.0	185.0	201.0	217.0	233.0	249.0	265.0	281.0	297.0	313.0	329.0	345.0
L_1	45.0	61.0	77.0	93.0	109.0	125.0	141.0	157.0	173.0	189.0	205.0	221.0	237.0	253.0	269.0	285.0	301.0	317.0	333.0
L_2	100.0	125.0	137.5	150.0	162.5	187.5	200.0	212.5	225.0	250.0	262.5	275.0	300.0	312.5	325.0				
L_3	87.5	112.5	125.0	137.5	150.0	175.0	187.5	200.0	212.5	237.5	250.0	262.5	287.5	300.0	312.5				

Dimensions

M4GB2-C10-K

Note: Dedicated manifold base.

* Refer to page 854 for mounting hole details.

● Grommet lead wire (blank)
External pilot (K)

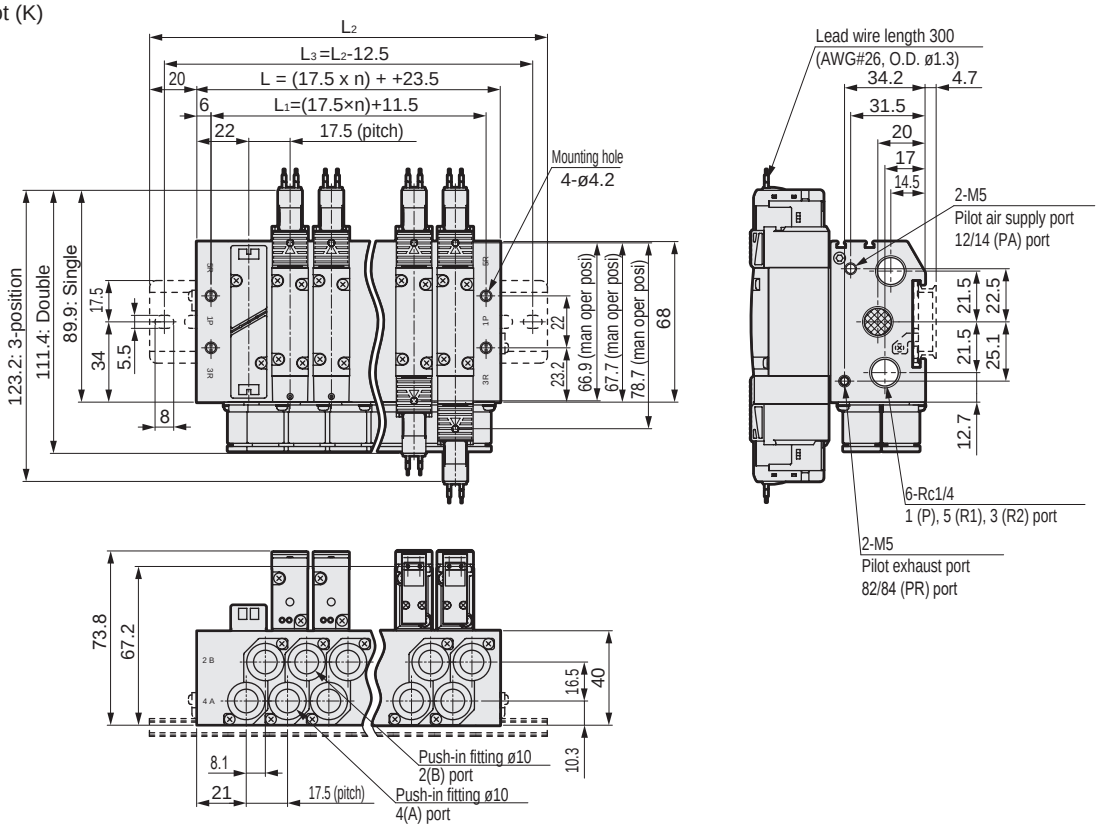

● External pilot (K)
E-connector (E)

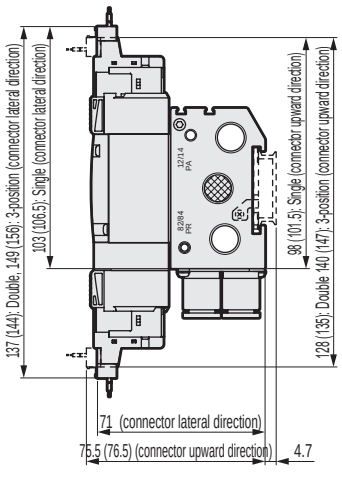

● External pilot (K)
EJ-connector (E**J)

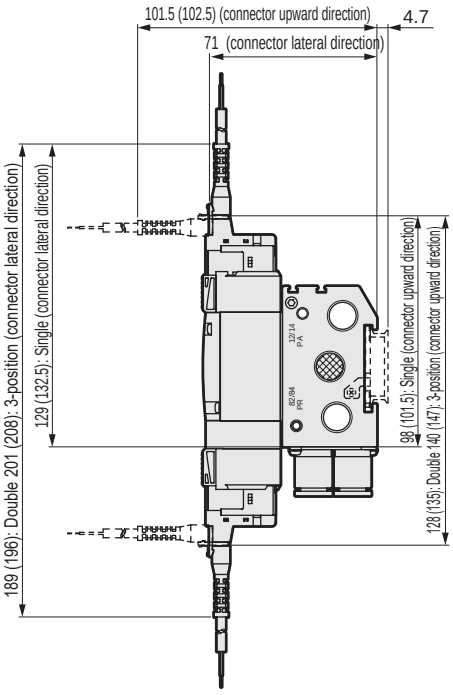

● External pilot (K)
DIN terminal box (B)

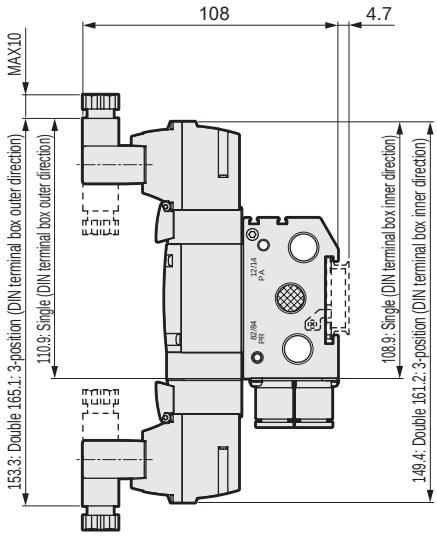

Note: Values in ( ) are for AC voltage.

Note: Values in ( ) are for AC voltage.

Station No.	2	3	4	5	6	7	8	9	10	11	12	13	14	15	16	17	18	19	20
L	58.5	76.0	93.5	111.0	128.5	146.0	163.5	181.0	198.5	216.0	233.5	251.0	268.5	286.0	303.5	321.0	338.5	356.0	373.5
L_1	46.5	64.0	81.5	99.0	116.5	134.0	151.5	169.0	186.5	204.0	221.5	239.0	256.5	274.0	291.5	309.0	326.5	344.0	361.5
L_2	100.0	125.0	137.5	162.5	175.0	187.5	212.5	225.0	250.0	262.5	275.0	300.0	312.5	337.5	350.0				
L_3	87.5	112.5	125.0	150.0	162.5	175.0	200.0	212.5	237.5	250.0	262.5	287.5	300.0	325.0	337.5				

Dimensions

● DIN terminal box (B)

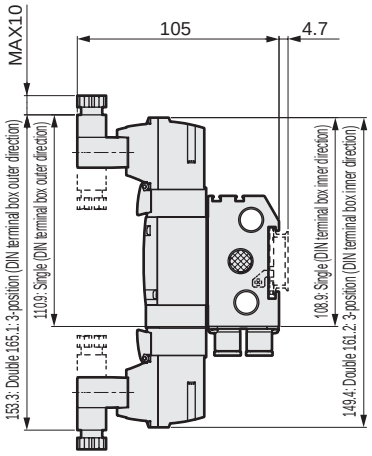

● External pilot
DIN terminal box (B)

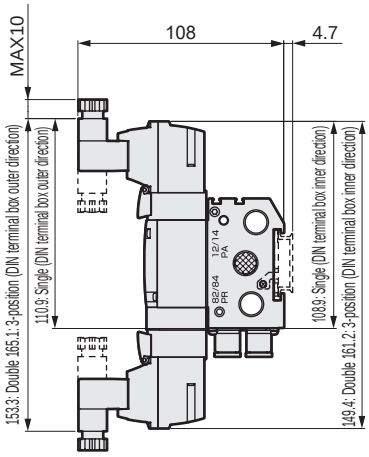

Note: DIN terminal box assembly is shipped facing inward.

● Fitting straight

● ø4(C4) ● ø6(C6) ● ø8(C8) ● ø10(C10)

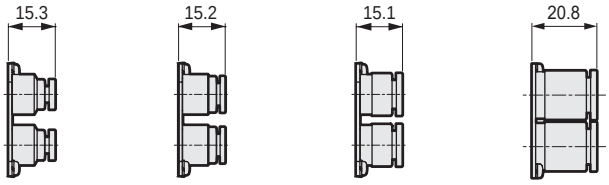

● Fitting straight, single plug

● ø4(C4NC) ● ø6(C6NC) ● ø8(C8NC) ● ø10(C10NC) ● ø4(C4NO) ● ø6(C6NO) ● ø8(C8NO) ● ø10(C10NO)

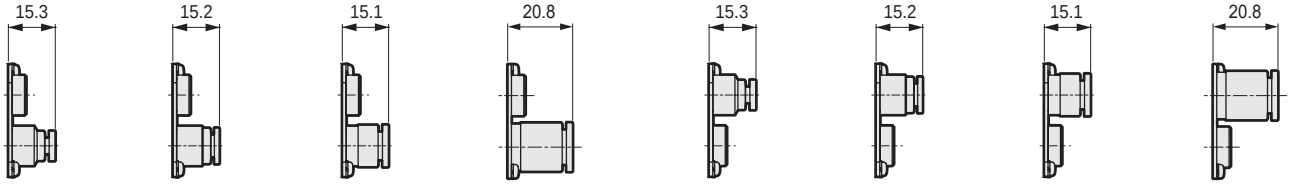

● L-fitting (upward)

● ø6(CL6) ● ø8(CL8)

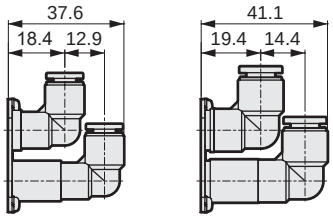

● L-fitting (downward)

● ø6(CD6) ● ø8(CD8)

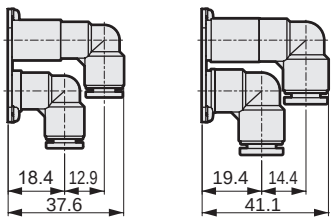

● L-fitting (upward), single plug

● ø6(CL6NC) ● ø8(CL8NC) ● ø6(CL6NO) ● ø8(CL8NO)

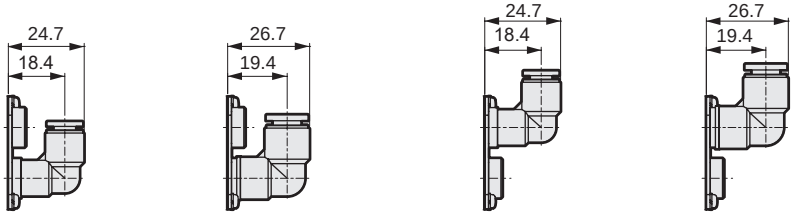

● L-fitting (downward), single plug

● ø6(CD6NC) ● ø8(CD8NC) ● ø6(CD6NO) ● ø8(CD8NO)

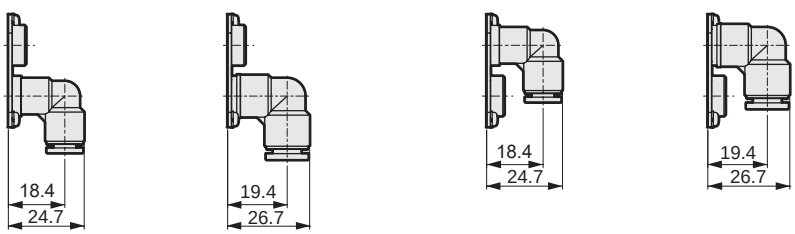

Dimensions

- Fitting straight
  - ø1/4" (C6N)

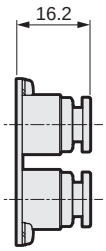

  - ø5/16" (C8N)

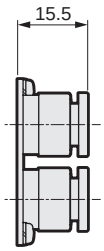

- Fitting straight, single plug
  - ø1/4" (C6NCN)

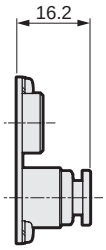

  - ø5/16" (C8NCN)

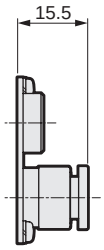

  - ø1/4" (C6NON)

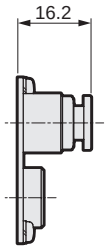

  - ø5/16" (C8NON)

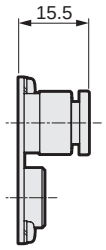

- L-fitting (upward)
  - ø1/4" (CL6N)

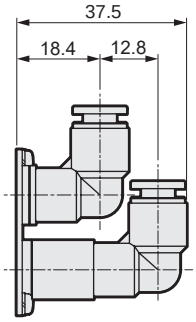

  - ø5/16" (CL8N)

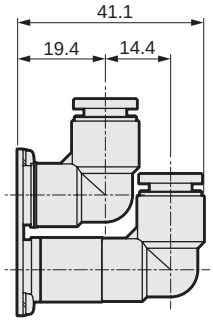

  - ø1/8" (CD6N)

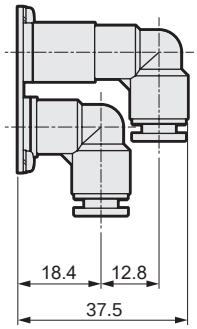

  - ø5/32" (CD8N)

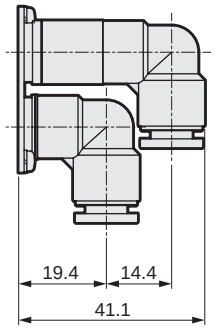

- L-fitting (upward), single plug
  - ø1/4" (CL6NCN)

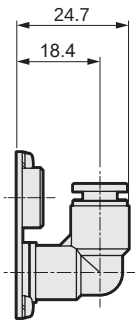

  - ø5/16" (CL8NCN)

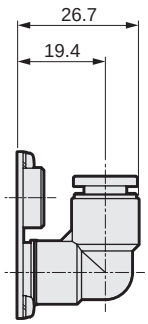

  - ø1/4" (CL6NON)

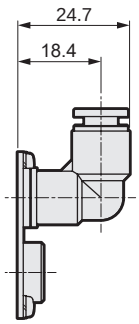

  - ø5/16" (CL8NON)

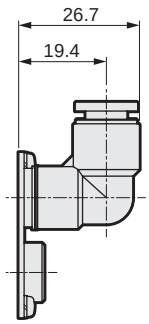

- L-fitting (downward), single plug
  - ø1/4" (CD6NCN)

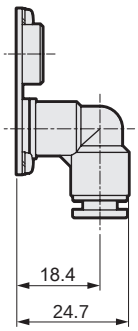

  - ø5/16" (CD8NCN)

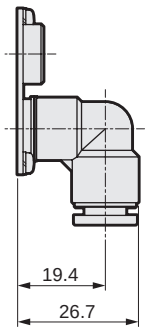

  - ø1/4" (CD6NON)

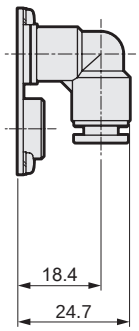

  - ø5/16" (CD8NON)

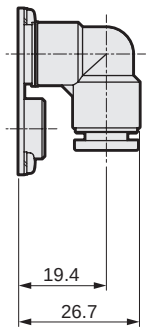

Dimensions CAD

M4GB3

* Refer to page 854 for mounting hole details.

● Grommet lead wire (blank)

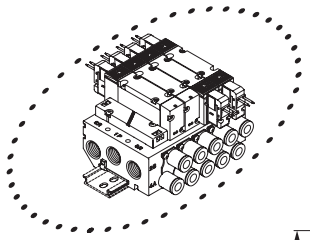

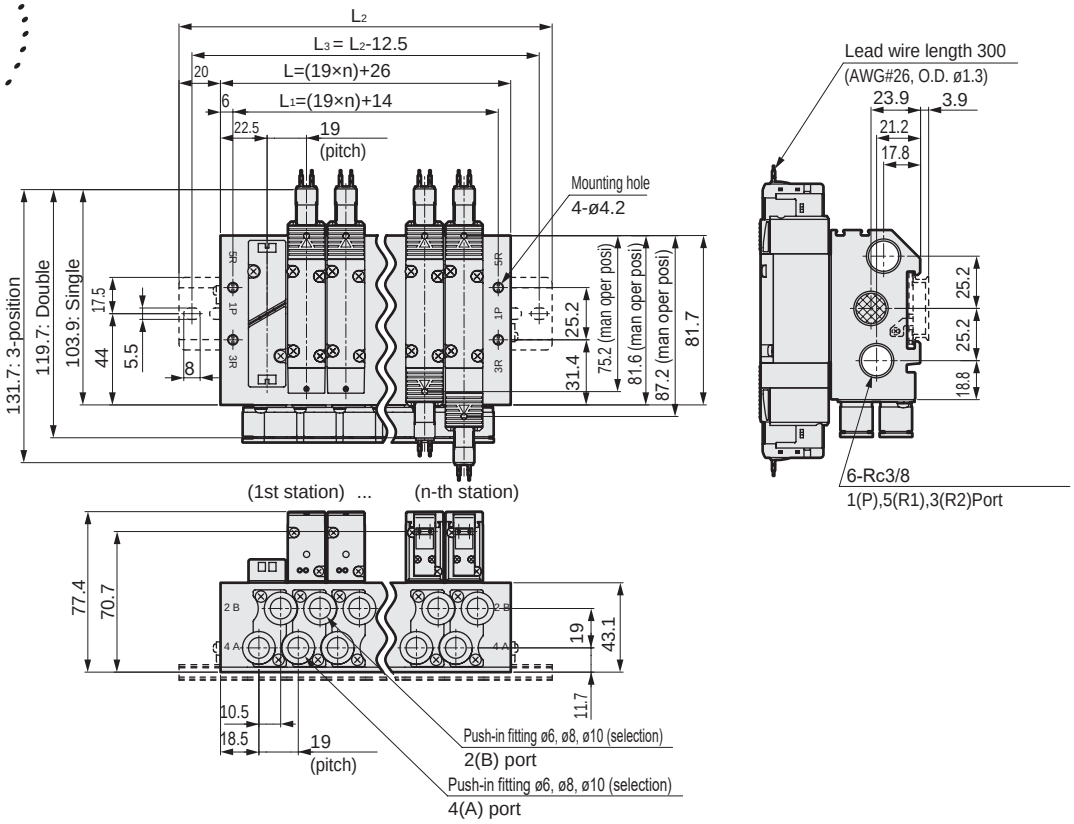

● Rc1/4 female thread (08)

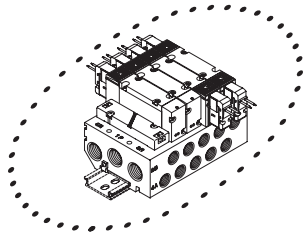

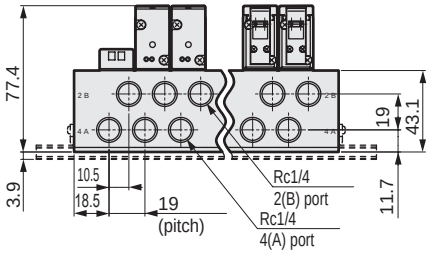

● E-connector (E)

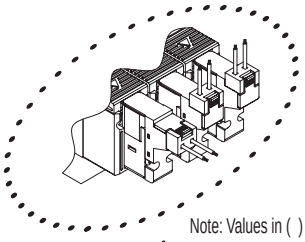

Note: Values in ( ) are for AC voltage.

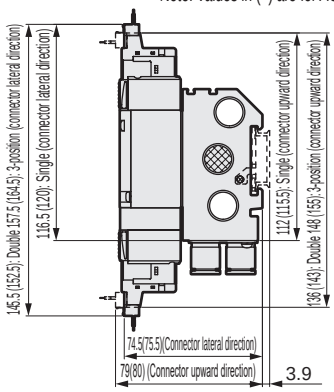

● EJ-connector (E**J)

Note: Values in ( ) are for AC voltage.

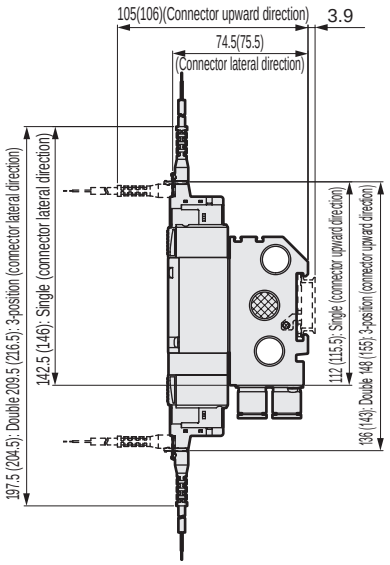

Station No.	2	3	4	5	6	7	8	9	10	11	12	13	14	15	16	17	18	19	20
L	64.0	83.0	102.0	121.0	140.0	159.0	178.0	197.0	216.0	235.0	254.0	273.0	292.0	311.0	330.0	349.0	368.0	387.0	406.0
L_1	52.0	71.0	90.0	109.0	128.0	147.0	166.0	185.0	204.0	223.0	242.0	261.0	280.0	299.0	318.0	337.0	356.0	375.0	394.0
L_2	112.5	125.0	150.0	162.5	187.5	200.0	225.0	237.5	262.5	275.0	300.0	325.0	337.5	362.5	375.0				
L_3	100.0	112.5	137.5	150.0	175.0	187.5	212.5	225.0	250.0	262.5	287.5	312.5	325.0	350.0	362.5				

Dimensions CAD

M4GB3

* Refer to page 854 for mounting hole details.

● External pilot (K)
Grommet lead wire (blank)

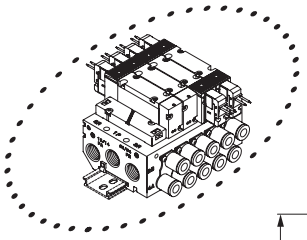

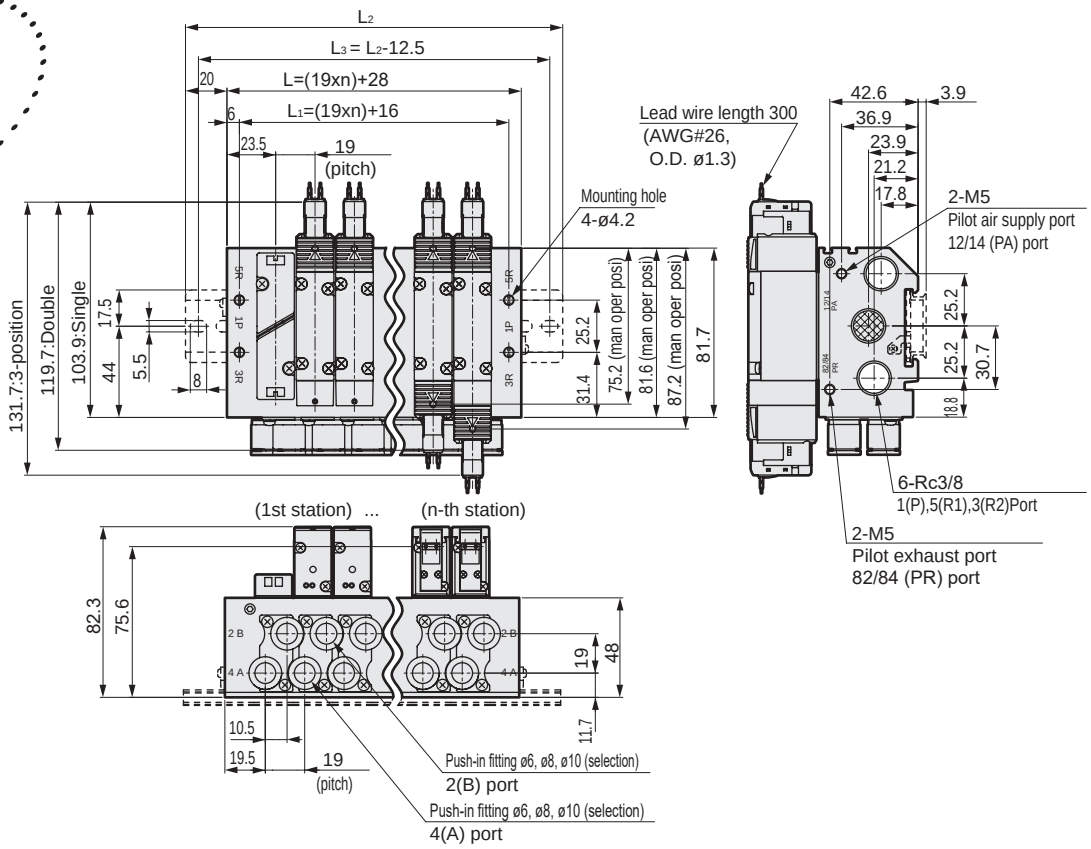

● External pilot (K)
Rc1/4 female thread (08)

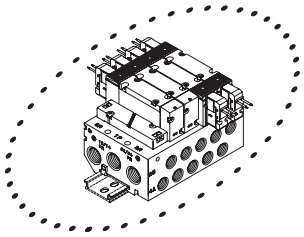

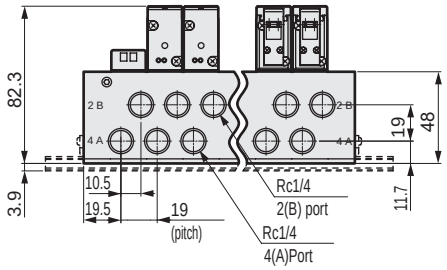

● External pilot (K)
E-connector (E)

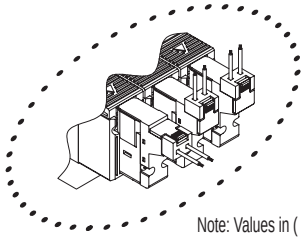

Note: Values in ( ) are for AC voltage.

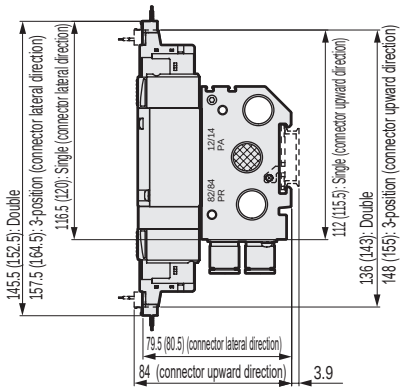

● External pilot (K)
EJ-connector (E**J)

Note: Values in ( ) are for AC voltage.

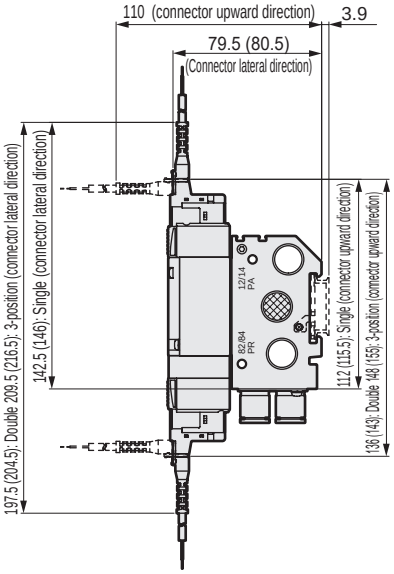

Station No.	2	3	4	5	6	7	8	9	10	11	12	13	14	15	16	17	18	19	20
L	66.0	85.0	104.0	123.0	142.0	161.0	180.0	199.0	218.0	237.0	256.0	275.0	294.0	313.0	332.0	351.0	370.0	389.0	408.0
L_1	54.0	73.0	92.0	111.0	130.0	149.0	168.0	187.0	206.0	225.0	244.0	263.0	282.0	301.0	320.0	339.0	358.0	377.0	396.0
L_2	112.5	125.0	150.0	175.0	187.5	212.5	225.0	250.0	262.5	287.5	300.0	325.0	337.5	362.5	375.0				
L_3	100.0	112.5	137.5	162.5	175.0	200.0	212.5	237.5	250.0	275.0	287.5	312.5	325.0	350.0	362.5				

Dimensions

● DIN terminal box (B)

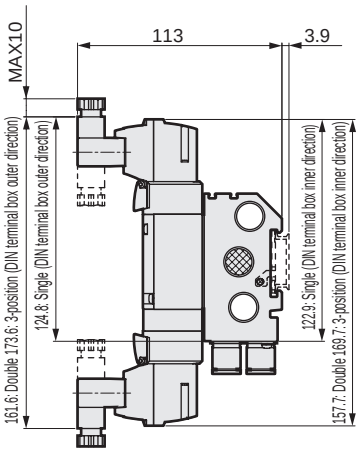

● External pilot (K)
DIN terminal box (B)

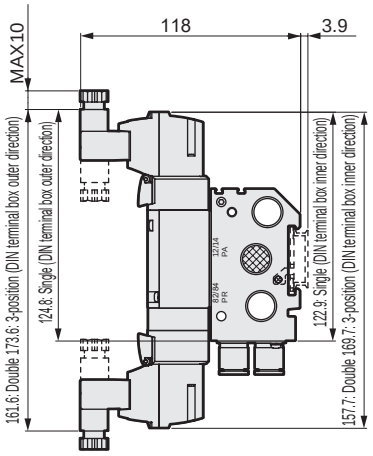

Note: DIN terminal box assembly is shipped facing inward.

● Fitting straight

● ø6(C6) ● ø8(C8) ● ø10 (C10)

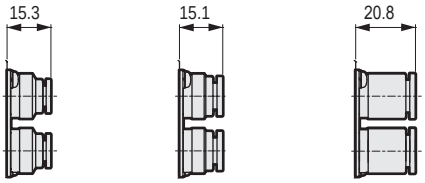

● Fitting straight, single plug

● ø6 (C6NC) ● ø8 (C8NC) ● ø10 (C10NC) ● ø6 (C6NO) ● ø8 (C8NO) ● ø10 (C10NO)



● L-fitting (upward)

● ø8 (CL8) ● ø10 (CL10)

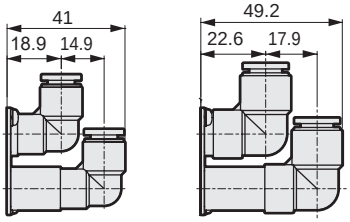

● L-fitting (downward)

● ø8 (CD8) ● ø10 (CD10)

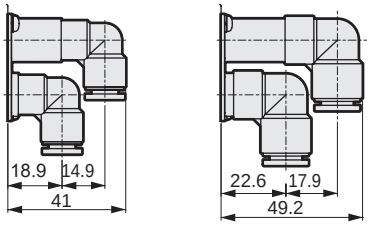

● L-fitting (upward), single plug

● ø8 (CL8NC) ● ø10 (CL10NC) ● ø8 (CL8NO) ● ø10 (CL10NO)



● L-fitting (downward), single plug

● ø8 (CD8NC) ● ø10 (CD10NC) ● ø8 (CD8NO) ● ø10 (CD10NO)

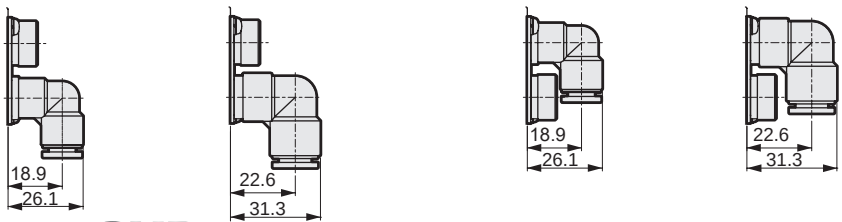

Dimensions

- Fitting straight
- ø5/16" (C8N)

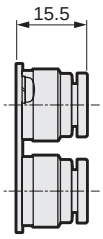

- ø3/8" (C10N)

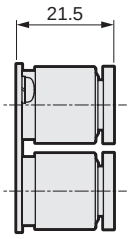

- Fitting straight, single plug
- ø5/16" (C8NCN)

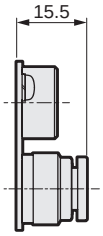

- ø3/8" (C10NCN)

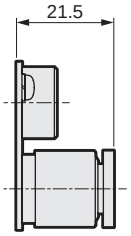

- ø5/16" (C8NON)

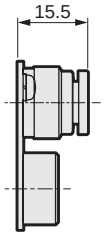

- ø3/8" (C10NON)

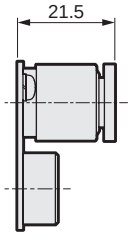

- L-fitting (upward)
- ø5/16" (CL8N)

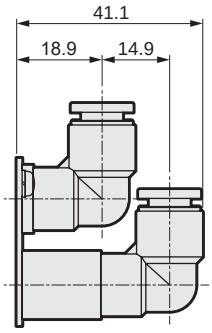

- ø3/8" (CL10N)

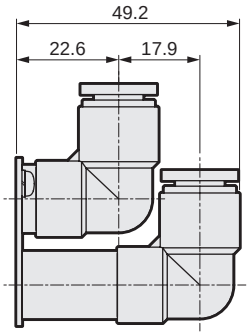

- ø5/16" (CD8N)

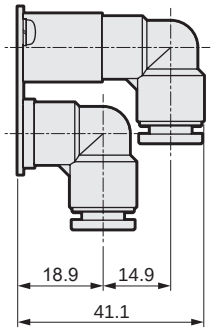

- ø3/8" (CD10N)

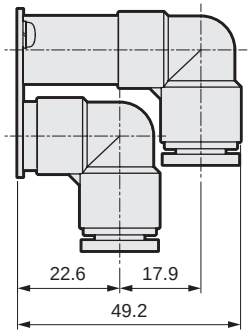

- L-fitting (upward), single plug
- ø5/16" (CL8NCN)

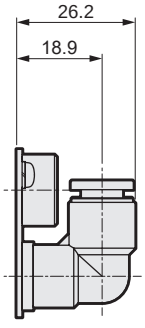

- ø3/8" (CL10NCN)

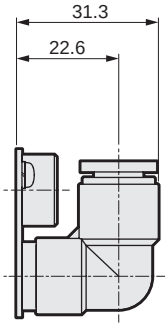

- ø5/16" (CL8NON)

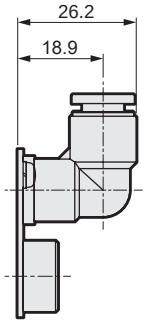

- ø3/8" (CL10NON)

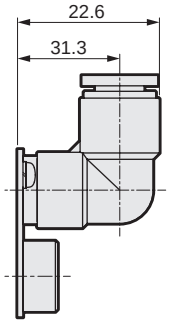

- L-fitting (downward), single plug
- ø5/16" (CD8NCN)

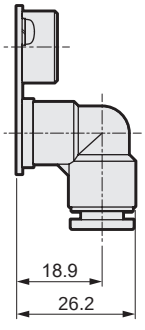

- ø3/8" (CD10NCN)

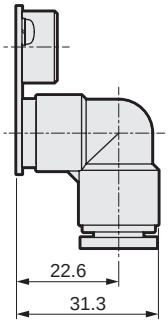

- ø5/16" (CD8NON)

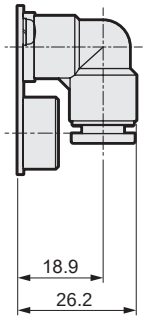

- ø3/8" (CD10NON)

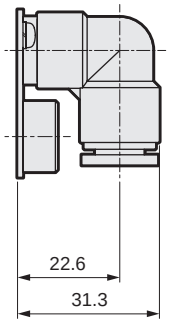

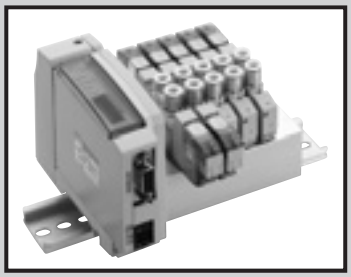

Reduced wiring manifold
Body piping
Direct mount/DIN rail mount

M3GA1/2/3-T*(D) Series
M4GA1/2/3-T*(D) Series

• Cylinder bore size: ø20 to ø100

RoHS CAD

JIS symbol

● 3-port valve

2-position single NC

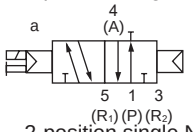

2-position single NO

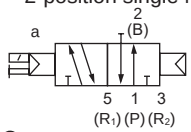

● Two 3-port valves integrated

(A side valve: NC, B side valve: NC)

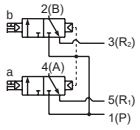

(A side valve: NC, B side valve: NO)

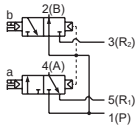

(A side valve: NO, B side valve: NC)

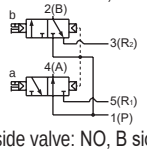

(A side valve: NO, B side valve: NO)

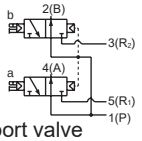

● 5-port valve

2-position single

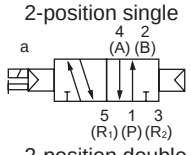

2-position double

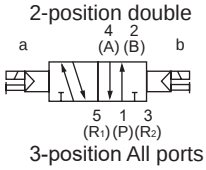

3-position All ports closed

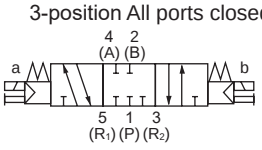

3-position A/B/R connection

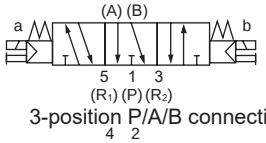

3-position P/A/B connection

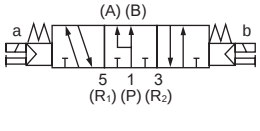

Manifold common specifications

Item		Description
Manifold		Reduced wiring integrated base
Mounting method		Direct mount/DIN rail mount
Supply and exhaust method		Common supply/common exhaust (With internal exhaust check valve)
Pilot exhaust method	Internal pilot	Main valve/pilot valve common exhaust (Pilot exhaust check valve built-in)
	External pilot	Main valve/pilot valve individual exhaust
Piping direction		Valve top direction
Valve and operation		Pilot operated soft spool valve
Working fluid		Compressed air
Max. working pressure MPa		0.7 (≈100 psi, 7 bar)
Min. working pressure MPa		0.2 (≈29 psi, 2 bar) (*3)
Proof pressure MPa		1.05 (≈150 psi, 10.5 bar)
Ambient temperature °C		-5 (23°F) to 55 (131°F) (no freezing)
Fluid temperature °C		5 (41°F) to 55 (131°F)
Manual override		Non-locking/locking common type (standard)
Lubrication (*1)		Not required
Degree of protection (*2)		Dust-proof
Vibration resistance m/s^2		50 or less
Shock resistance m/s^2		300 or less
Atmosphere		Cannot be used in corrosive gas environments

*1 Use turbine oil Class 1 ISO VG32 for lubrication. Excessive or intermittent lubrication results in unstable operation.
*2 Avoid dripping water or oil, etc., during use.
*3 The working pressure range is 0 to 0.7 MPa when the external pilot (option code: K) is selected. Set the external pilot pressure between 0.2 and 0.7 MPa.

Electrical specifications

Item		Description		
		T1□, T30□, T5□		T6G1, T8□
Rated voltage V		DC24	DC12	DC24
Voltage fluctuation range (*4)		±10%		+10%, -5%
Holding current A	Standard	0.017	0.034	0.017
	Low exoergic/energy circuit	0.005	0.010	0.005
Power consumption W	Standard	0.4		
	Low exoergic/energy circuit	0.1		
Thermal class		B		
Surge suppressor (*5)		Zener diode		
Indicator		LED		

*4 : T6G1 and T8□ (serial transmission) may experience voltage drops due to internal circuitry, so care should be taken when regulating voltages.
*5 : If low exoergic/energy saving circuit or surgeless types are selected then there will be a diode.

Common specifications

Item		M3GA1/M4GA1	M3GA2/M4GA2	M3GA3/M4GA3
Port size	A/B Port	Barbed fitting ø1.8 Push-in fitting ø1.8, ø4, ø6 M5	Push-in fitting ø4, ø6, ø8 Rc1/8	Push-in fitting ø6, ø8, ø10 Rc1/4
	P/R1/R2 port	Rc1/8	Rc1/4	Rc3/8

T1 □, T30 □, T5 □

Item		M3GA1/M4GA1		M3GA2/M4GA2		M3GA3/M4GA3	
		Direct mount	DIN rail mount	Direct mount	DIN rail mount	Direct mount	DIN rail mount
Max. station No.	Standard (Internal pilot)	20 stations	16 stations	20 stations	16 stations	16 stations	
	External pilot	12 stations					
Manifold base weight Calculation formula (n: Station No.) g	Standard	29n+215	31n+228	54n+264	56n+297	84n+320	86n+354
	External pilot	44n+334	46n+347	96n+433	96n+468	149n+554	151n+583

T6G1

Item		M3GA1/M4GA1	M3GA2/M4GA2	M3GA3/M4GA3
		DIN rail mount	DIN rail mount	DIN rail mount
Max. station No.	Standard (Internal pilot)	16 stations	16 stations	16 stations
	External pilot	12 stations		
Manifold base weight Calculation formula (n: Station No.) g	Standard	31n+375	56n+444	86n+501
	External pilot	46n+494	98n+615	151n+731

T8 □

Item		M3GA1/M4GA1		M3GA2/M4GA2		M3GA3/M4GA3	
		Direct mount	DIN rail mount	Direct mount	DIN rail mount	Direct mount	DIN rail mount
Max. station No.	Standard (Internal pilot)	20 stations	16 stations	20 stations	16 stations	16 stations	
	External pilot	12 stations					
Manifold base weight Calculation formula (n: Station No.) g	Standard	50n+305	52n+332	57n+259	60n+290	150n+384	153n+416
	External pilot	51n+313	54n+340	102n+336	105n+368	169n+417	173n+449

The manifold base weight is the value for screw connection specifications with DIN rail, wiring block or device unit.
The max. station number of the manifold is limited by the max. number of solenoid for each of the following wiring specifications.

Flow characteristics

Model No.	Solenoid position		P → A/B		A/B→R1/R2	
			C[dm³/(s·bar)]	b	C[dm³/(s·bar)]	b
M3GA1 M4GA1	Two 3-port valves integrated		0.86	0.31	1.1 (0.66)	0.19 (0.22)
	2-position		0.99	0.20	1.2 (0.70)	0.20 (0.12)
	3-position	All ports closed	0.94	0.23	1.1 -	0.20 -
		ABR connection	0.93	0.18	1.3 (0.70)	0.23 (0.02)
		PAB connection	1.1	0.28	1.1 -	0.23 -
M3GA2 M4GA2	Two 3-port valves integrated		1.7	0.40	2.3 (1.7)	0.29 (0.32)
	2-position		2.3	0.36	2.9 (1.7)	0.24 (0.33)
	3-position	All ports closed	2.1	0.35	2.5 -	0.32 -
		ABR connection	2.2	0.37	2.9 (1.8)	0.32 (0.29)
		PAB connection	2.4	0.34	2.5 -	0.33 -
M3GA3 M4GA3	2-position		3.2	0.37	3.8 (2.5)	0.13 (0.28)
	3-position	All ports closed	2.9	0.35	3.3 -	0.35 -
		ABR connection	3.0	0.34	3.8 (2.6)	0.12 (0.27)
		PAB connection	3.3	0.30	3.3 -	0.32 -

*1: Effective cross-sectional area S and sonic conductance C are converted as S ≈ 5.0 × C.
*2: Values in ( ) are with the exhaust check valve.

Wiring specifications

Item	T10□ Common terminal block	T11□ Common terminal block	T30□ DSub-connector	T50□ Flat cable 20-pin	T51□ Flat cable 20-pin	T52□ Flat cable 10-pin	T53□ Flat cable 26-pin
Connector and terminal block specifications	M3 thread fastening 18 terminals	Clamping 26 terminals	D-sub-connector 25-pin	MIL-C-83503 standard compliant Pressure welding socket 20-pin	MIL-C-83503 standard compliant Pressure welding socket 20-pin	MIL-C-83503 standard compliant Pressure welding socket 10-pin	MIL-C-83503 standard compliant Pressure welding socket 26-pin
Max. number of solenoids	16 points	24 points	24 points	16 points	18 points	8 points	24 points
Manifold internal wiring	Details on pages 816 to 823						
Wiring block position Blank: Left side R: Right side	**Left side: T□** a solenoid side / b solenoid side; Wiring block, 1st station, 2nd station, 3rd station … 6th station				**Right side: T□R** a solenoid side / b solenoid side; 1st station, 2nd station, 3rd station … 6th station, Wiring block		
Array method Blank: Standard sequential W: Double wiring	**(Ex.) In the case of T50□** Manifold specifications: 1a 2a 3a 4a / S D S D / 2b 4b; 1st station, 3rd station, 2nd station, 4th station						

Standard wiring (sequential):Blank

Connector pin No.	1	2	3	4	5	6
Valve solenoid No.	1a	2a	2b	3a	4a	4b

Double wiring: W

Connector pin No.	1	2	3	4	5	6	7	8
Valve solenoid No.	1a	Blank	2a	2b	3a	Blank	4a	4b

Serial transmission device unit specifications

Download the communication setting file from the CKD website (https://www.ckd.co.jp/en/).

Item		T6G1
Network name		CC-Link ver. 1.10
Power supply voltage	Unit side	24 VDC ±10%
	Valve side	24 VDC +10% −5%
Current consumption	Unit side	100mA or less (when all output points are ON)
	Valve side	15 mA or less (when all output points are OFF)
No. of output points		16 points
Occupied number		1 station
Operation display		LED (power supply and communication status)

Item		T8G1 T8G2	T8GP1 T8GP2	T8P1 T8P2	T8PP1 T8PP2	T8EC1 T8EC2	T8ECP1 T8ECP2	T8EN1 T8EN2	T8ENP1 T8ENP2	T8D1 T8D2	T8DP1 T8DP2	T8EB1 T8EB2	T8EBP1 T8EBP2	T8EP1 T8EP2	T8EPP1 T8EPP2
Communication protocol		CC-Link ver. 1.10		PROFIBUS-DP(V0)		EtherCAT		EtherNet/IP		DeviceNet		CC-Link IEF Basic		PROFINET	
Power supply voltage	Unit side	24 VDC ±10%								11 to 25 VDC		24 VDC ±10%			
	Valve side	24 VDC 10%, 5%													
Current consumption	Unit side	60 mA or less (when all output points are ON)		60 mA or less (when all output points are ON)		110 mA or less (when all output points are ON)		120 mA or less (when all output points are ON)		70 mA or less (when all output points are ON)		130 mA or less (when all output points are ON)		130 mA or less (when all output points are ON)	
	Valve side	T8 □ 1: 15 mA or less T8 □ 2: 20 mA or less (When all output points are ON) Load current is not included								15 mA or less (When all output points are ON) Load current is not included					
No. of output points		T8 □ 1: 16 points T8 □ 2: 32 points													
Occupied number		1 station													
Operation display		LED (power supply and communication status)													
Output		NPN output	PNP output	NPN output	PNP output	NPN output	PNP output	NPN output	PNP output	NPN output	PNP output	NPN output	PNP output	NPN output	PNP output

M$^{3}_{4}$GA1/2/3-T*(D) Series

Reduced wiring manifold; body piping

How to order

Manifold model No.

M 4GA1 1 0R - C6 - T30 W H D - ○ - 3

3-port manifold model No.

M 3GA1 1 0R - C6 - T30 W H D - ○ - 3

● Single valve for mounting base

4GA1 1 9R - C6 - A2N ○ H — 3

● 3-port discrete valve for mounting base

3GA1 1 9R - C6 - A2N ○ H — 3

- 3GA1: Ⓐ Model No.
- 1: Ⓑ Solenoid position
- C6: Ⓒ Port size
- A2N: A2N indicates the A-connector (downward), with lamp/surge suppressor and no lead wire.
- ○: Ⓓ Reduced wiring connection (Zener diode is used as a surge suppressor.)
- H: Ⓔ Terminal/connector pin array method
- D: Ⓕ Option
- ○: Ⓖ Mount Type
- 3: Ⓗ Station No.
- 3: Ⓘ Voltage

● Refer to page 819 for the model No. of cables with D-sub-connector.
● Refer to page 815 for the model No. of cables for flat cable connector.

Precautions for model No. selection

*1: Select M4GA*80R when mixing with 3, 5-port valves. Also, select M3GA*80R when mixing with masking plate.
*2: Not compatible when combined with external pilot (K). Dimensions are the same as those of the respective 2-position double solenoid.
*3: The push-in fitting cannot be mixed with the discrete valve's 4(A) or 2(B) port.
*4: Blank: The wiring will be based on the type of valve used.
W*: All wired for double solenoid valves regardless of the type of valve used.
***5: Spare wiring (A-type socket assembly) is included on the cap side for single types. A holder for retaining the socket assembly is included for single unit valves (A2N). For details, refer to page 197.**

*Be sure to fill in the "Manifold specifications sheet" (pages 213 to 224).

Code	Description		Ⓐ Model No. 3GA1	3GA2	3GA3	4GA1	4GA2	4GA3
Ⓑ Solenoid position								
1	2 position single					●	●	●
2	2-position double					●	●	●
3	3-position all ports closed					●	●	●
4	3-position ABR connection					●	●	●
5	3-position PAB connection					●	●	●
1	2-position single normally closed (*1)		●	●	●			
11	2-position single normally open (*1)		●	●	●			
66	Two 3-port valves integrated (*1)(*2)	A side valve: Normally closed B side valve: Normally closed	●	●				
67		A side valve: Normally closed B side valve: Normally open	●	●				
76		A side valve: Normally open B side valve: Normally closed	●	●				
77		A side valve: Normally open B side valve: Normally open	●	●				
8	Mix manifold(for multiple solenoid positions)		●	●	●	●	●	●

Port	4(A)/2(B) port	Port P/R1/R2 (1/8) = Rc1/8 (1/4) = Rc1/4 (3/8) =Rc3/8					
Ⓒ Port size							
CF	ø1.8 barbed fitting (compatible tube UP-9102-**)	②			②		
C18	ø1.8 push-in fitting (compatible tube UP-9402-**)	②			②		
C4	ø4 push-in fitting	②	③		②	③	
C6	ø6 push-in fitting	②	③	④	②	③	④
C8	ø8 push-in fitting		③	④		③	④
C10	ø10 push-in fitting			④			④
CX	Push-in fitting mix (*3)	②	③	④	②	③	④
M5	M5	②			②		
06	Rc1/8		③			③	
08	Rc1/4			④			④
Port	4(A)/2(B)Port	Port P/R1/R2 (1/8) = 1/8NPT, (1/4) = 1/4NPT, (3/8) = 3/8NPT					
C3N	ø1/8" push-in fitting	⑤			⑤		
C4N	ø5/32" push-in fitting	⑤			⑤		
C6N	ø1/4" push-in fitting		⑥			⑥	
C8N	ø5/16" push-in fitting		⑥	⑦		⑥	⑦
C10N	ø3/8" push-in fitting			⑦			⑦
CXN	Push-in fitting mix (*3)	⑤	⑥	⑦	⑤	⑥	⑦
M5N	M5	⑤			⑤		
06 N	NPT1/8		⑥			⑥	
08 N	NPT1/4 (*4)			⑦			⑦
Port	4(A)/2(B)Port	Port P/R1/R2 (1/8) = G1/8, (1/4) = G1/4 (10)=G3/8					
C4G	ø4 push-in fitting	⑧	⑨		⑧	⑨	
C6G	ø6 push-in fitting	⑧	⑨		⑧	⑨	
C8G	ø8 push-in fitting		⑨	⑩		⑨	⑩
C10G	ø10 push-in fitting			⑩			⑩
CXG	Push-in fitting mix (*3)	⑧	⑨	⑩	⑧	⑨	⑩
M5G	M5	⑧			⑧		
06G	G1/8		⑨			⑨	
08G	G1/4			⑩			⑩

Ⓓ Reduced wiring (lamp/surge suppressor equipped as standard)

Refer to the next page for electrical connections.

Ⓔ Terminal/connector pin array							
Blank	Standard wiring (*4)	●	●	●	●	●	●
W	Double wiring (*4)	●	●	●	●	●	●
W1	Double wiring (with single spare wiring) (*4) (*5)	●	●	●	●	●	●

Ⓕ Option

Refer to the following page for options.

Ⓖ Mount type							
Blank	Direct mount	●	●	●	●	●	●
D	DIN rail mount	●	●	●	●	●	●

Ⓗ Station No.							
2	2 stations	●	●	●	●	●	●
to	to						
20	Refer to page 136 for the max. station No. per model.						

Ⓘ Voltage							
3	24 VDC	●	●	●	●	●	●
4	12 VDC	●	●	●	●	●	●

is not available.

			Ⓐ Model No.					
			3GA1	3GA2	3GA3	4GA1	4GA2	4GA3
Ⓓ Reduced wiring connection (lamp and surge suppressor equipped as standard) 12/24 VDC								
T10	Common terminal block (M3 thread)	Left-sided specifications	●	●	●	●	●	●
T10R		Right-sided specifications	●	●	●	●	●	●
T11	Common terminal block (clamping)	Left-sided specifications	●	●	●	●	●	●
T11R		Right-sided specifications	●	●	●	●	●	●
T30	D-sub-connector	Left-sided specifications	●	●	●	●	●	●
T30R		Right-sided specifications	●	●	●	●	●	●
T50	20-pin flat cable connector (with power supply terminal)	Left-sided specifications	●	●	●	●	●	●
T50R		Right-sided specifications	●	●	●	●	●	●
T51	20-pin flat cable connector (without power supply terminal)	Left-sided specifications	●	●	●	●	●	●
T51R		Right-sided specifications	●	●	●	●	●	●
T52	10-pin flat cable connector (without power supply terminal)	Left-sided specifications	●	●	●	●	●	●
T52R		Right-sided specifications	●	●	●	●	●	●
T53	26-pin flat cable connector (without power supply terminal)	Left-sided specifications	●	●	●	●	●	●
T53R		Right-sided specifications	●	●	●	●	●	●
Ⓓ Serial transmission (lamp/surge suppressor equipped as standard) 24 VDC								
T6G1	CC-Link	NPN 16 points	●	●	●	●	●	●
T8G1	CC-Link	NPN 16 points	●	●	●	●	●	●
T8G2		NPN 32 points	●	●	●	●	●	●
T8GP1		PNP 16 points	●	●	●	●	●	●
T8GP2		PNP 32 points	●	●	●	●	●	●
T8P1	PROFIBUS-DP	NPN 16 points	●	●	●	●	●	●
T8P2		NPN 32 points	●	●	●	●	●	●
T8PP1		PNP 16 points	●	●	●	●	●	●
T8PP2		PNP 32 points	●	●	●	●	●	●
T8EC1	EtherCAT	NPN 16 points	●	●	●	●	●	●
T8EC2		NPN 32 points	●	●	●	●	●	●
T8ECP1		PNP 16 points	●	●	●	●	●	●
T8ECP2		PNP 32 points	●	●	●	●	●	●
T8EN1	EtherNet/IP	NPN 16 points	●	●	●	●	●	●
T8EN2		NPN 32 points	●	●	●	●	●	●
T8ENP1		PNP 16 points	●	●	●	●	●	●
T8ENP2		PNP 32 points	●	●	●	●	●	●
T8D1	DeviceNet	NPN 16 points	●	●	●	●	●	●
T8D2		NPN 32 points	●	●	●	●	●	●
T8DP1		PNP 16 points	●	●	●	●	●	●
T8DP2		PNP 32 points	●	●	●	●	●	●
T8EB1	CC-Link IEF Basic	NPN 16 points	●	●	●	●	●	●
T8EB2		NPN 32 points	●	●	●	●	●	●
T8EBP1		PNP 16 points	●	●	●	●	●	●
T8EBP2		PNP 32 points	●	●	●	●	●	●
T8EP1	PROFINET	NPN 16 points	●	●	●	●	●	●
T8EP2		NPN 32 points	●	●	●	●	●	●
T8EPP1		PNP 16 points	●	●	●	●	●	●
T8EPP2		PNP 32 points	●	●	●	●	●	●
A2N	Without lead wire (without socket)	with surge suppressor and indicator lamp	●	●	●	●	●	●

Ⓕ Option								
Blank	Manual override of non-locking/locking common		●	●	●	●	●	●
M	Manual override of non-locking		●	●	●	●	●	●
H	With exhaust check valve	(*6)	●	●	●	●	●	●
K	External pilot	(*7)	●	●	●	●	●	●
A	Ozone/coolant proof		●	●	●	●	●	●
S	Surgeless	(*8)	●	●	●	●	●	●
E	Low exoergic/energy saving circuit	(*8)(*9)	●	●	●	●	●	●
F	Port A/B filter built in	(*10)	●	●	●	●	●	●
Z1	Air supply spacer	(*11)	●	●	●	●	●	●
Z2	In-stop valve spacer	(*11)(*12)	●	●	●	●	●	●
Z3	Exhaust spacer	(*11)	●	●	●	●	●	●

Ozone-proof specifications • **Coolant proof specifications**

Select option "A" of Item Ⓕ in How to order.

Clean-room specifications

● Anti-dust generation structure for use in cleanrooms

** - Voltage - **P7***

Specifications for rechargeable battery (Catalog No. CC-1226A)

● For use in the rechargeable battery manufacturing process, materials used for air path and sliding section are limited

** - Voltage - **P4**

CE marking specifications

** - Voltage - **ST**

• Standard voltage of 24 VDC or less is CE marking-compatible even if the model No. is not indicated with "ST".

⚠ Precautions for model No. selection

*6: 3-position all ports closed and PAB connection are not provided with the exhaust check valve specifications (H). Refer to page 851 for details on the exhaust check valve.
*7: Consult with CKD when using vacuum with external pilot (K).
*8: In addition, surgeless "S" and low exoergic/energy circuit "E" cannot be selected together.
*9: Surgeless specifications.
*10: A filter is built into port P as standard.
*11: Specify the spacer mounting position and quantity on the manifold specifications sheet. Stacking of spacers is not possible. Combination with the masking plate is not supported. For details, refer to page 188 to page 192.
*12: Not compatible in combination with external pilot (K).

Manifold components explanation and parts list

- T10/T10R
- T11/T11R
- T30/T30R
- T50/T50R
- T51/T51R
- T52/T52R
- T53/T53R

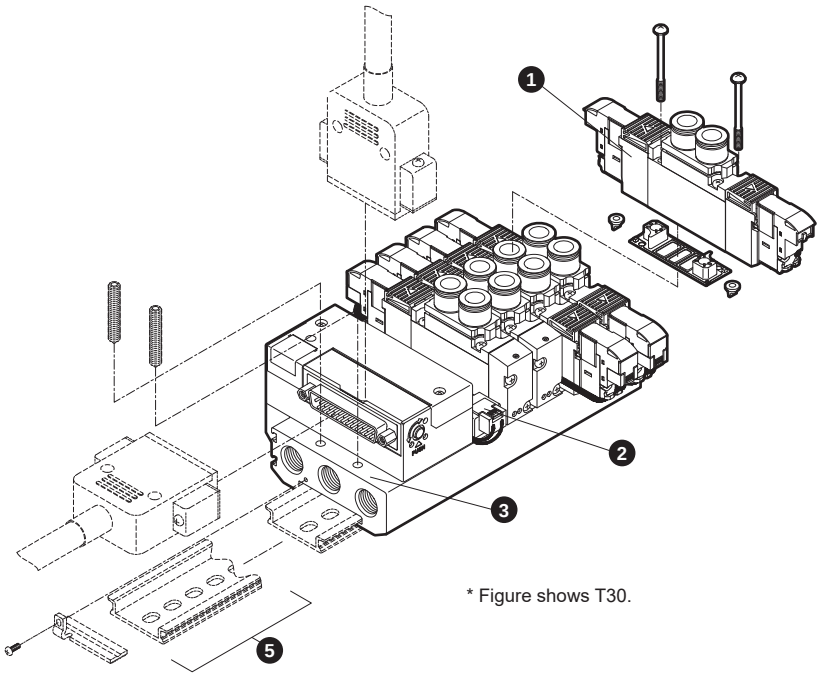

* Figure shows T30.

- T6G1

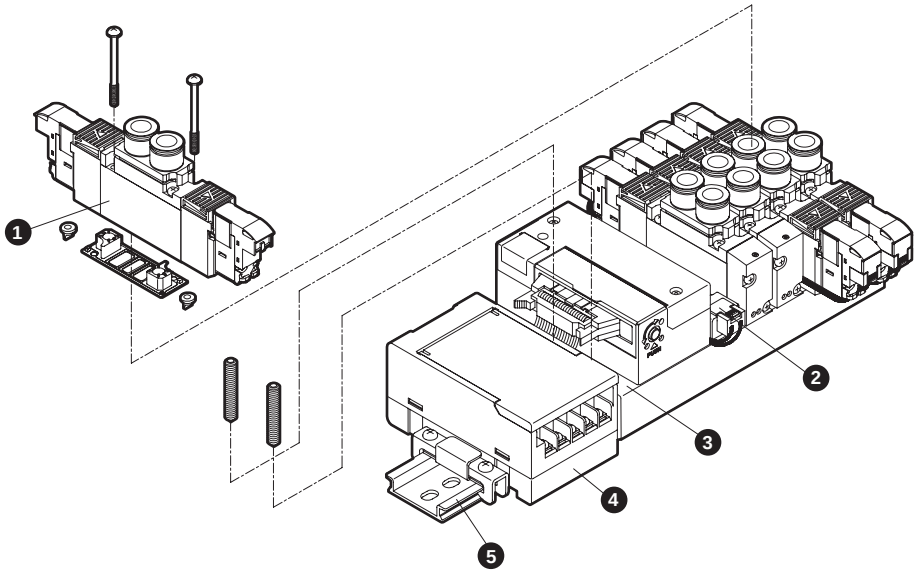

- T8*

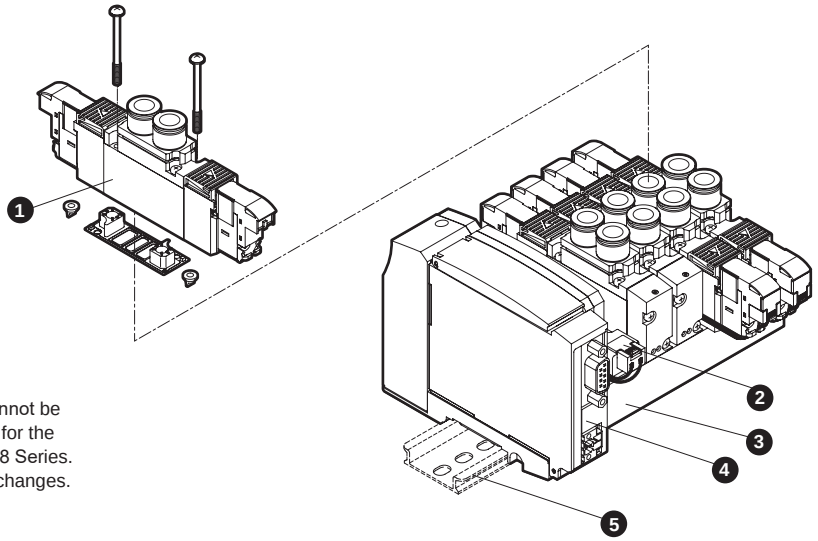

* Mount (direct, DIN rail) cannot be changed after purchasing for the M4GA2-T8 and M4GA3-T8 Series. M4GA1-T8 Series allows changes.

Main parts list

No.	Component name		Model No.	Content	Remarks
1	Discrete valve for mounting base		4GA □□9R- [Port size] -A2N [Option] - [Voltage] Solenoid position Series flow rate size	Discrete valve Gasket 2 mounting screws 2 PR check valves	Details on page 138
2	Masking plate	3G1/4G1	4G1R-MP	Masking plate Gasket 2 mounting screws	* 4G3R-MP has two PR check valves included.
		3G2/4G2	4G2R-MP		
		3G3/4G3	4G3R-MP		
3	Manifold base assembly		M4GA □R-00- [Reduced wiring connection] - [Option] - [Station No.] Series flow rate size	Manifold base Wiring block	
4	Serial transmission device unit		4GR-OPP3 - [Wiring method]	OPP3 discrete serial transmission device unit (connector connection)	Details on page 156
			4GR-OPP7 - [Wiring method]	OPP7 discrete serial transmission device unit (slim slot)	
5	DIN rail kit		4GA□R-BAA [Rail length] - [Option] D Series flow rate size		Details on page 200

Parts list

No.	Part name	Model No.
-	Coil assembly	4GR-A2N- □-COIL- [Voltage] Blank: Standard A: Ozone/coolant proof S: Surgeless E: Low exoergic/energy saving circuit K: External pilot
-	A-connector socket assembly Details on page 837	Series flow rate size 4G□R-SOCKET-ASSY-A□□ - [Row No.] Blank: Left side, R: Right side A: aSOL side, B: bSOL side n: Specify position of valve to be connected

No.	Part name		Model No.	
-	Cartridge push-in fitting and related parts	4G1	ø1.8 barbed	4G1R-JOINT-CF
			ø1.8 axial	4G1R-JOINT-C18
			ø4 straight	4G1R-JOINT-C4
			ø6 straight	4G1R-JOINT-C6
			ø1/8" straight	4G1R-JOINT-C3N
			ø5/32" straight	4G1R-JOINT-C4N
			Plug cartridge	4G1R-JOINT-CPG
		4G2	ø4 straight	4G2R-JOINT-C4
			ø6 straight	4G2R-JOINT-C6
			ø8 straight	4G2R-JOINT-C8
			ø1/4" straight	4G2R-JOINT-C6N
			ø5/16" straight	4G2R-JOINT-C8N
			Plug cartridge	4G2R-JOINT-CPG
		4G3	ø6 straight	4G3R-JOINT-C6
			ø8 straight	4G3R-JOINT-C8
			ø10 straight	4G3R-JOINT-C10
			ø5/16" straight	4G3R-JOINT-C8N
			ø3/8" straight	4G3R-JOINT-C10N
			Plug cartridge	4G3R-JOINT-CPG

Dimensions CAD

M4GA1

* Figure shows T30. Refer to pages 154 and 155 for detailed wiring block dimensions.
* For the 2-position single 3-port valve, either A port or B port is a plug. In addition, the two 3-port valve integrated has the same dimensions as the double model.
* Refer to page 855 for mounting hole details.

● Reduced wiring left side type (T10/T11/T30/T50/T51/T52/T53)

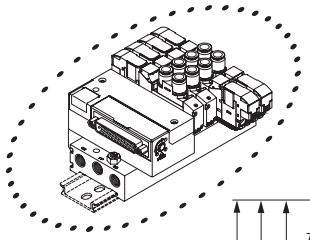

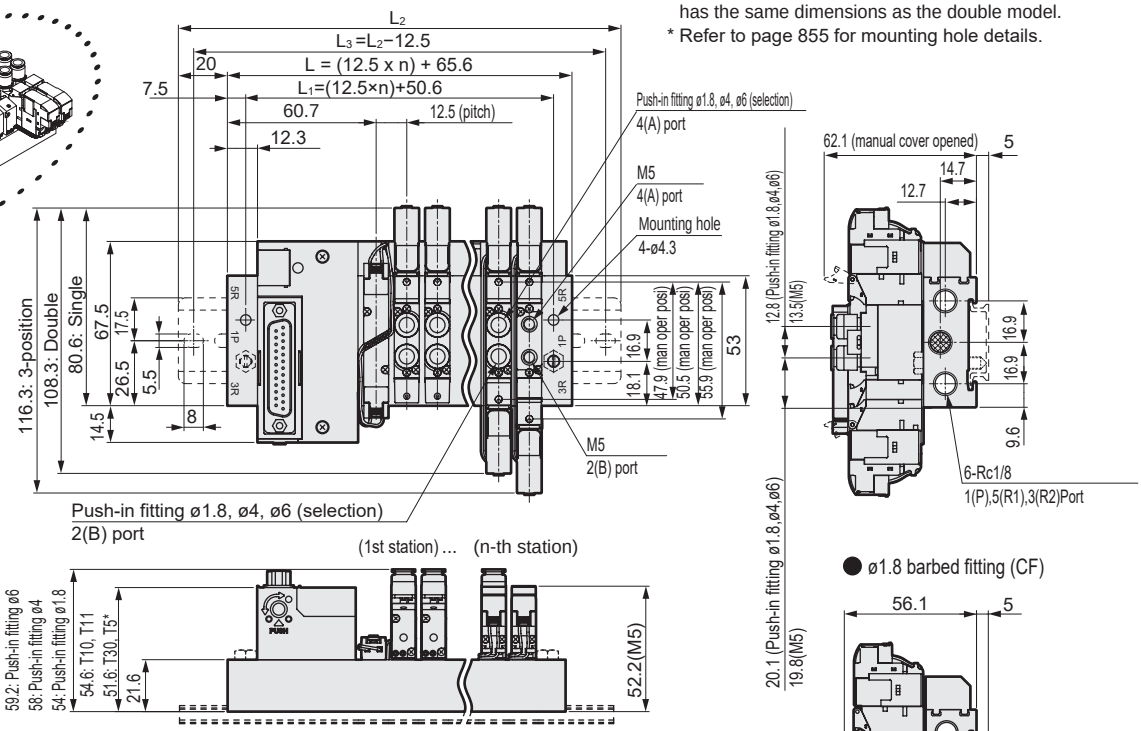

● ø1.8 barbed fitting (CF)

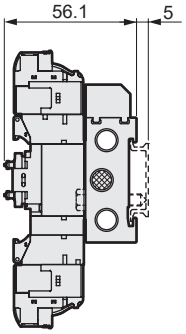

● Reduced wiring right side type (T10R/T11R/T30R/T50R/T51R/T52R/T53R)

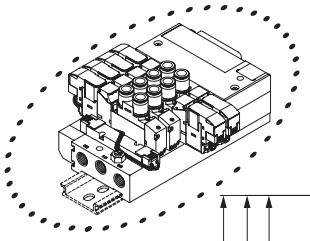

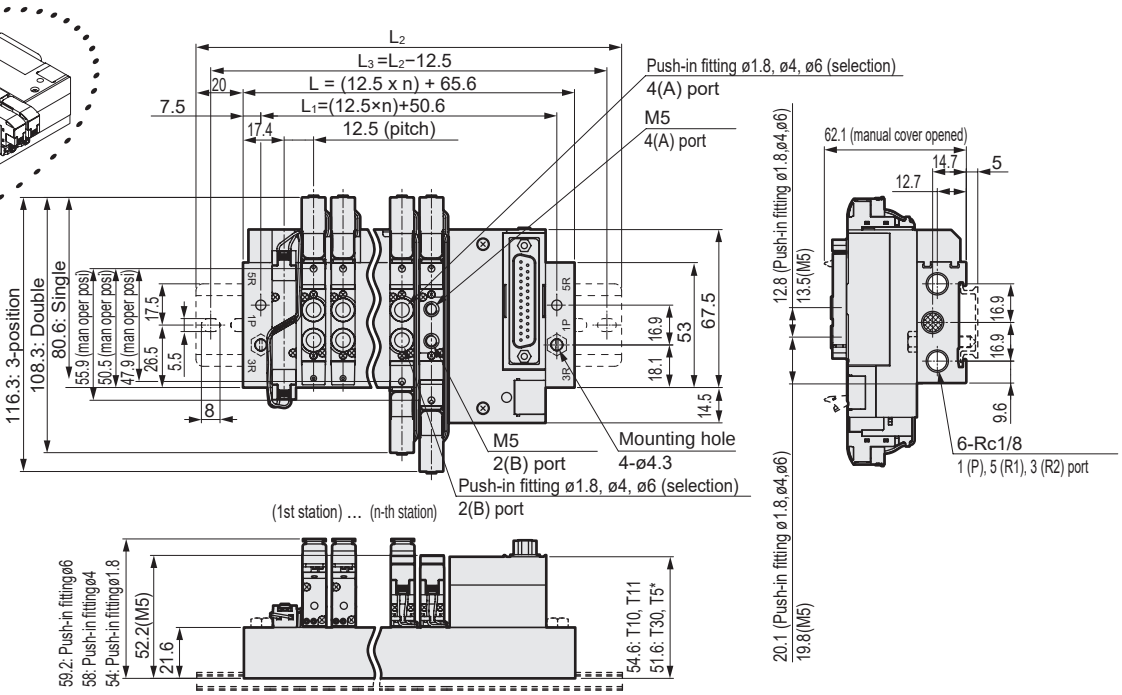

Station No.	2	3	4	5	6	7	8	9	10	11	12	13	14	15	16	17	18	19	20
L	90.6	103.1	115.6	128.1	140.6	153.1	165.6	178.1	190.6	203.1	215.6	228.1	240.6	253.1	265.6	278.1	290.6	303.1	315.6
L_1	75.6	88.1	100.6	113.1	125.6	138.1	150.6	163.1	175.6	188.1	200.6	213.1	225.6	238.1	250.6	263.1	275.6	288.1	300.6
L_2	137.5	150.0	162.5	175.0	187.5	200.0	212.5	225.0	237.5	250.0	262.5	275.0	287.5	300.0	312.5				
L_3	125.0	137.5	150.0	162.5	175.0	187.5	200.0	212.5	225.0	237.5	250.0	262.5	275.0	287.5	300.0				

Dimensions CAD

M4GA1

* Figure shows T30. Refer to pages 154 and 155 for detailed wiring block dimensions.
* For the 2-position single 3-port valve, either A port or B port is a plug.
* Refer to page 855 for mounting hole details.

● Reduced wiring left side type (T10/T11/T30/T50/T51/T52/T53)
External pilot (K)

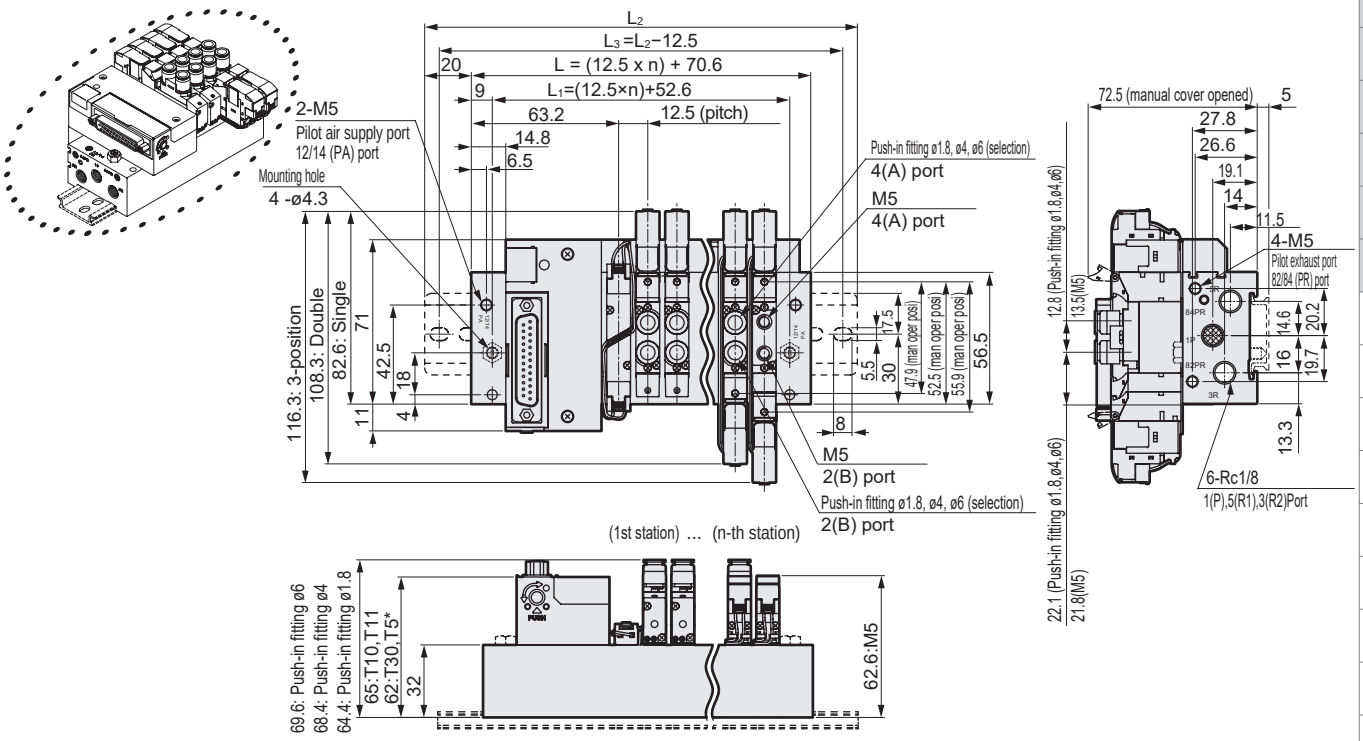

● Reduced wiring right side type (T10R/T11R/T30R/T50R/T51R/T52R/T53R)
External pilot (K)

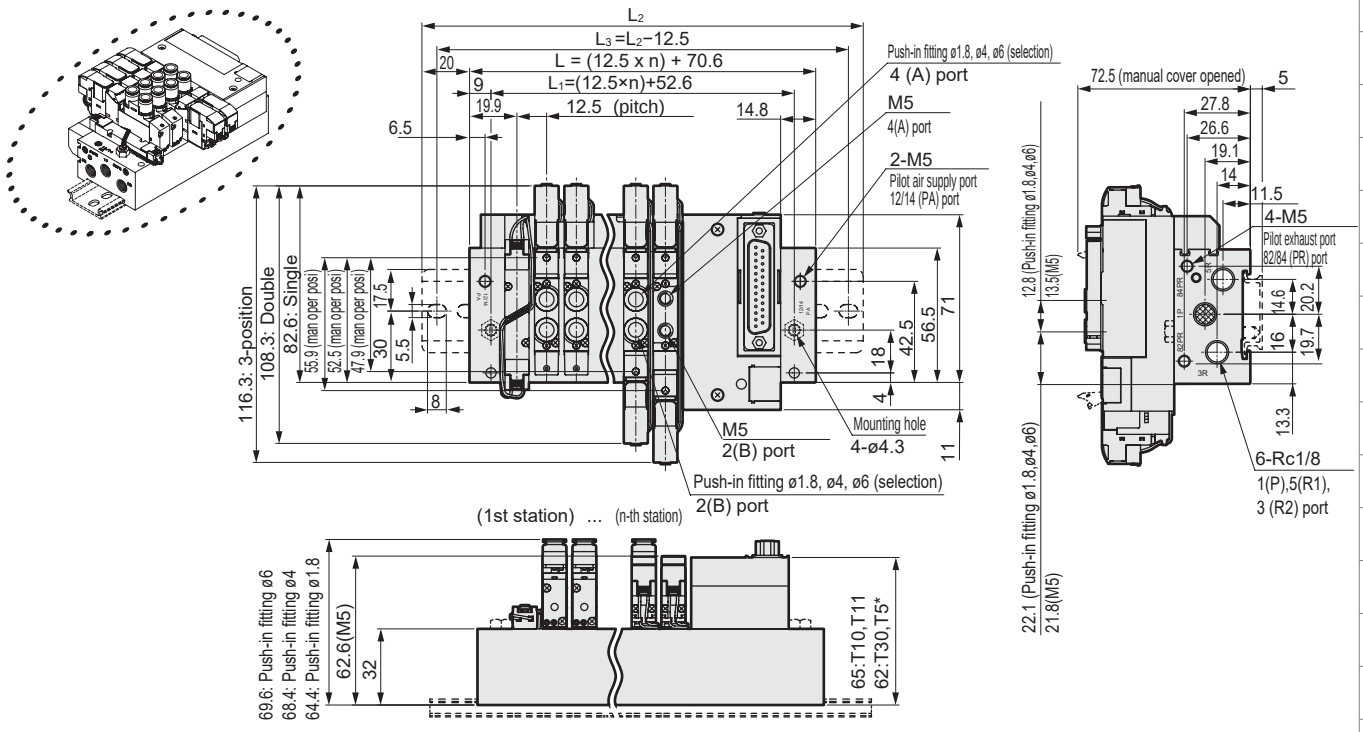

Station No.	2	3	4	5	6	7	8	9	10	11	12
L	95.6	108.1	120.6	133.1	145.6	158.1	170.6	183.1	195.6	208.1	220.6
L_1	77.6	90.1	102.6	115.1	127.6	140.1	152.6	165.1	177.6	190.1	202.6
L_2	137.5	150.0	162.5	175.0	187.5	200.0	212.5	225.0	237.5	250.0	262.5
L_3	125.0	137.5	150.0	162.5	175.0	187.5	200.0	212.5	225.0	237.5	250.0

Dimensions CAD

M4GA1

* For the 2-position single 3-port valve, either A port or B port is a plug. In addition, the two 3-port valve integrated has the same dimensions as the double model.

● Serial transmission (T6G1)
DIN rail mount (D)

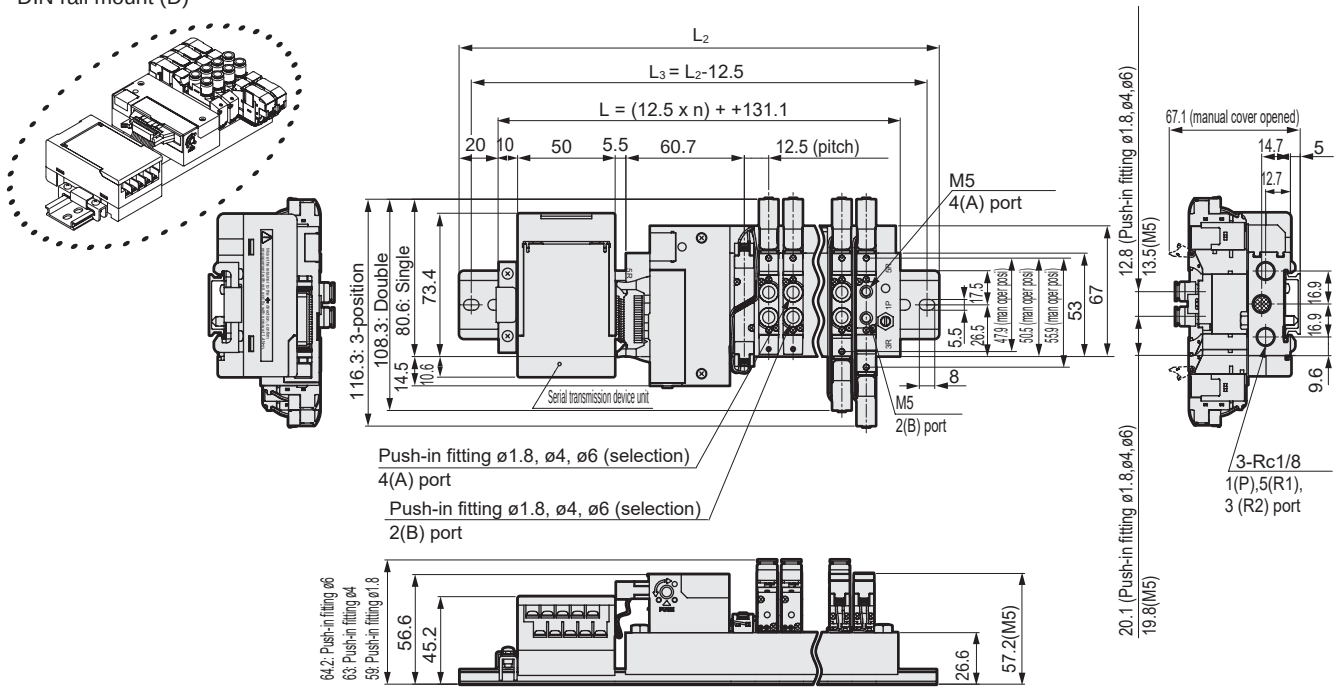

Station No.	2	3	4	5	6	7	8	9	10	11	12	13	14	15	16
L	156.1	168.6	181.1	193.6	206.1	218.6	231.1	243.6	256.1	268.6	281.1	293.6	306.1	318.6	331.1
L_2	200.0	212.5	225.0	237.5	250.0	262.5	275.0	287.5	300.0	312.5	325.0	337.5	350.0	362.5	375.0
L_3	187.5	200.0	212.5	225.0	237.5	250.0	262.5	275.0	287.5	300.0	312.5	325.0	337.5	350.0	362.5

M4GA1

● Serial transmission (T6G1)
DIN rail mounting (D); External pilot (K)

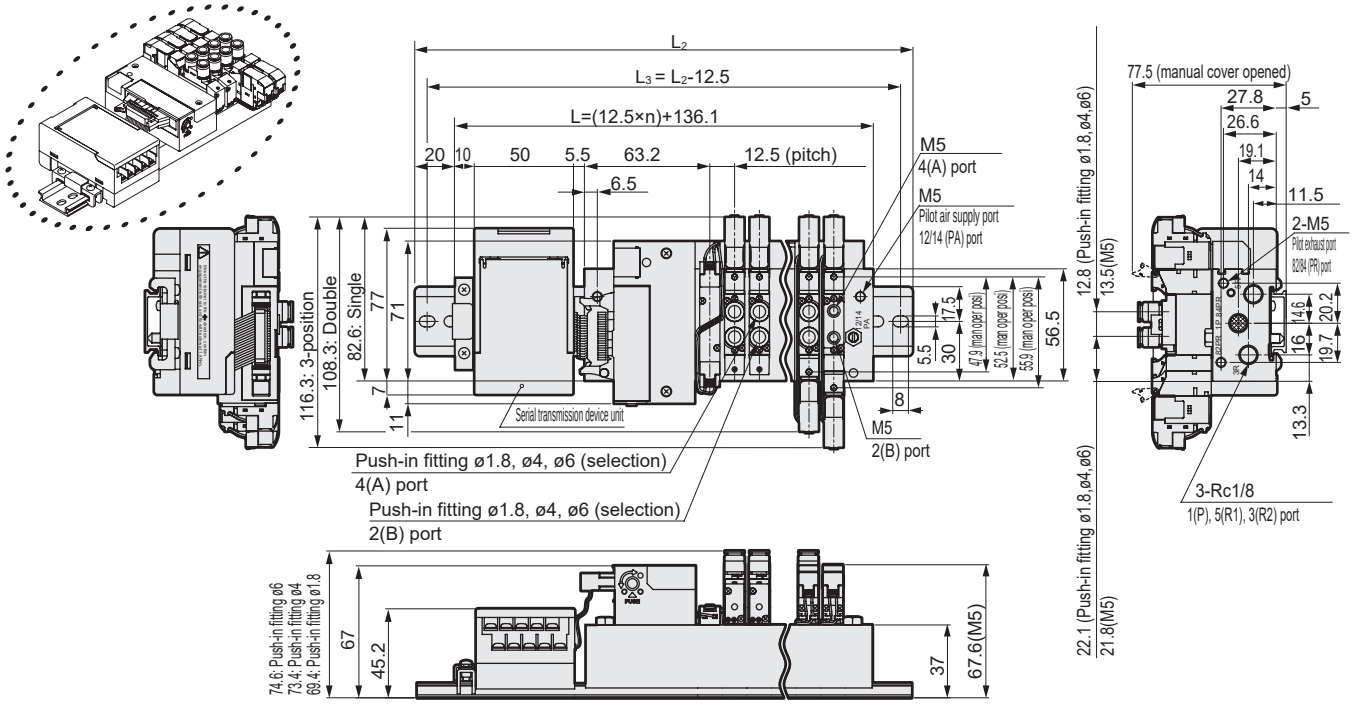

Station No.	2	3	4	5	6	7	8	9	10	11	12
L	161.1	173.6	186.1	198.6	211.1	223.6	236.1	248.6	261.1	273.6	286.1
L_2	212.5	225.0	237.5	250.0	262.5	275.0	287.5	300.0	312.5	325.0	337.5
L_3	200.0	212.5	225.0	237.5	250.0	262.5	275.0	287.5	300.0	312.5	325.0

Dimensions

M4GA1

* Refer to page 855 for details on mounting holes.

● Serial transmission (T8□)
DIN rail mount (D)

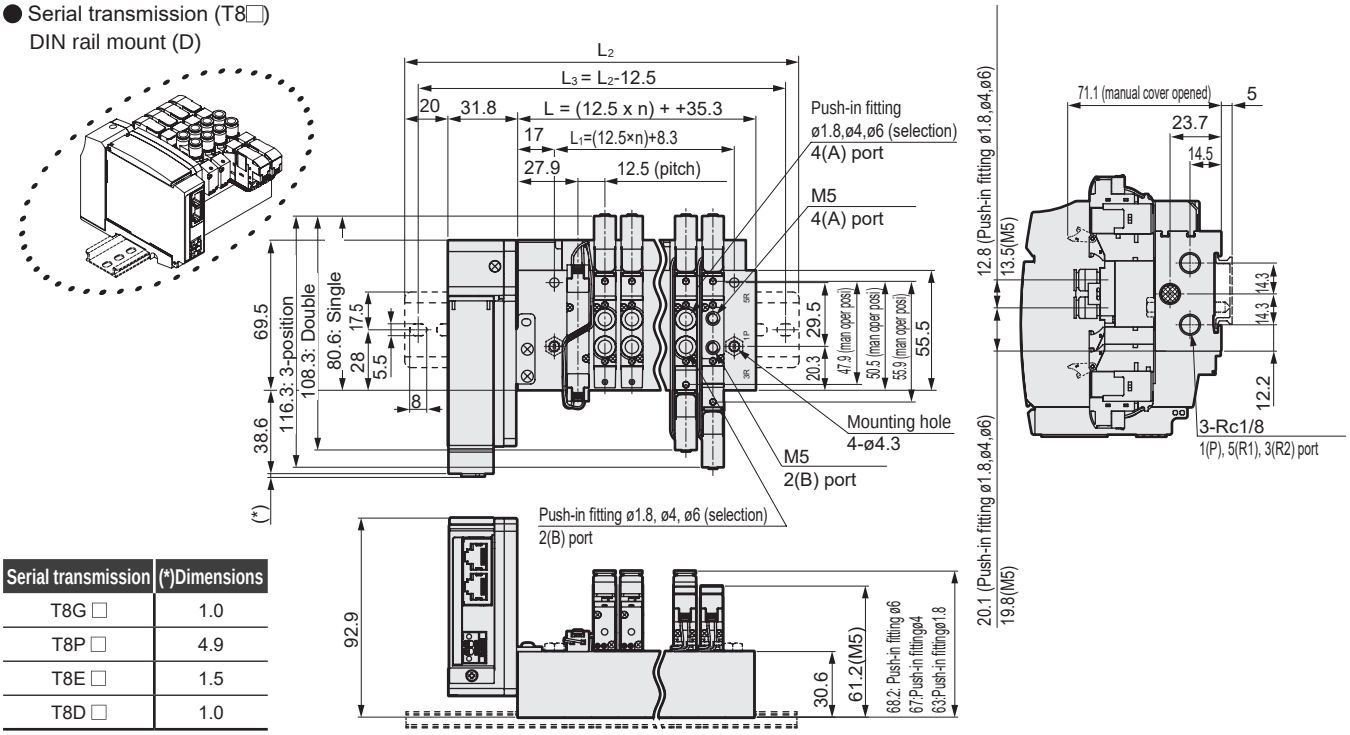

Serial transmission	(*)Dimensions
T8G □	1.0
T8P □	4.9
T8E □	1.5
T8D □	1.0

Station No.	2	3	4	5	6	7	8	9	10	11	12	13	14	15	16	17	18	19	20
L	60.3	72.8	85.3	97.8	110.3	122.8	135.3	147.8	160.3	172.8	185.3	197.8	210.3	222.8	235.3	247.8	260.3	272.8	285.3
L_1	33.3	45.8	58.3	70.8	83.3	95.8	108.3	120.8	133.3	145.8	158.3	170.8	183.3	195.8	208.3	220.8	233.3	245.8	258.3
L_2	137.5	150.0	162.5	175.0	187.5	200.0	212.5	225.0	237.5	250.0	262.5	275.0	287.5	300.0	312.5				
L_3	125.0	137.5	150.0	162.5	175.0	187.5	200.0	212.5	225.0	237.5	250.0	262.5	275.0	287.5	300.0				

M4GA1

● Serial transmission (T8□)
DIN rail mounting (D); External pilot (K)

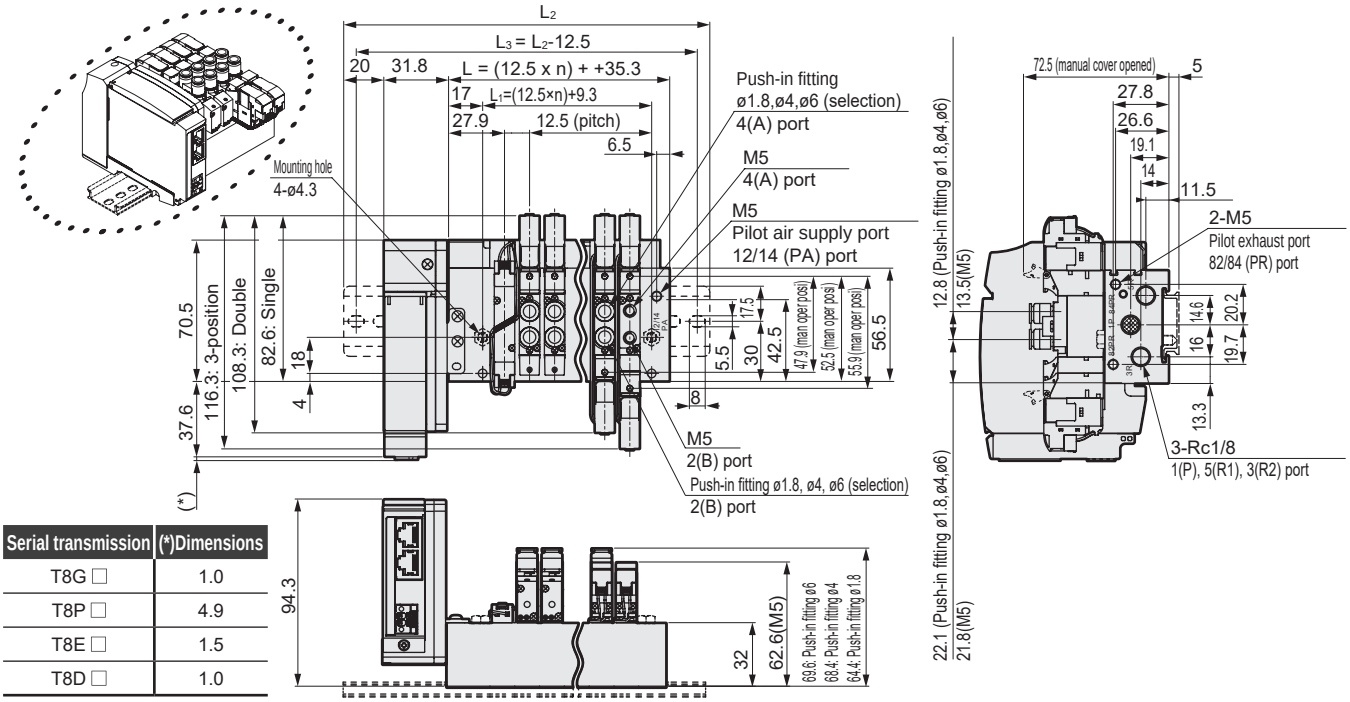

Serial transmission	(*)Dimensions
T8G □	1.0
T8P □	4.9
T8E □	1.5
T8D □	1.0

Station No.	2	3	4	5	6	7	8	9	10	11	12
L	60.3	72.8	85.3	97.8	110.3	122.8	135.3	147.8	160.3	172.8	185.3
L_1	34.3	46.8	59.3	71.8	84.3	96.8	109.3	121.8	134.3	146.8	159.3
L_2	137.5	150.0	162.5	175.0	187.5	200.0	212.5	225.0	237.5	250.0	262.5
L_3	125.0	137.5	150.0	162.5	175.0	187.5	200.0	212.5	225.0	237.5	250.0

Dimensions CAD

M4GA2

* Figure shows T50. Refer to pages 154 and 155 for detailed wiring block dimensions.
* For the 2-position single 3-port valve, either A port or B port is a plug. In addition, the two 3-port valve integrated has the same dimensions as the double model.
* Refer to page 854 for mounting hole details.

● Reduced wiring left side type (T10/T11/T30/T50/T51/T52/T53)

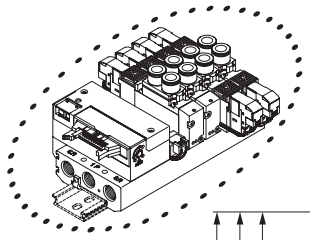

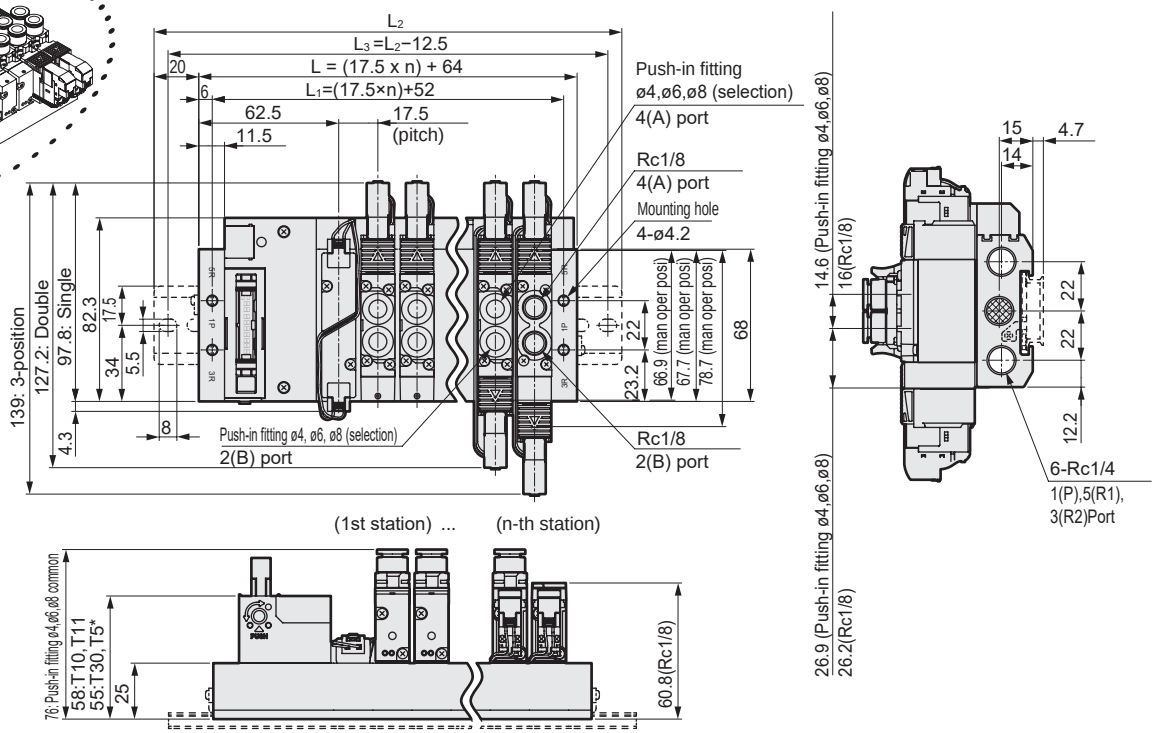

● Reduced wiring right side type (T10R/T11R/T30R/T50R/T51R/T52R/T53R)

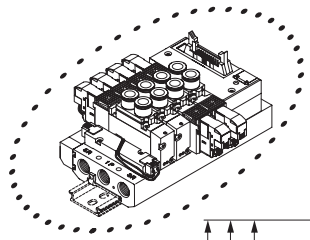

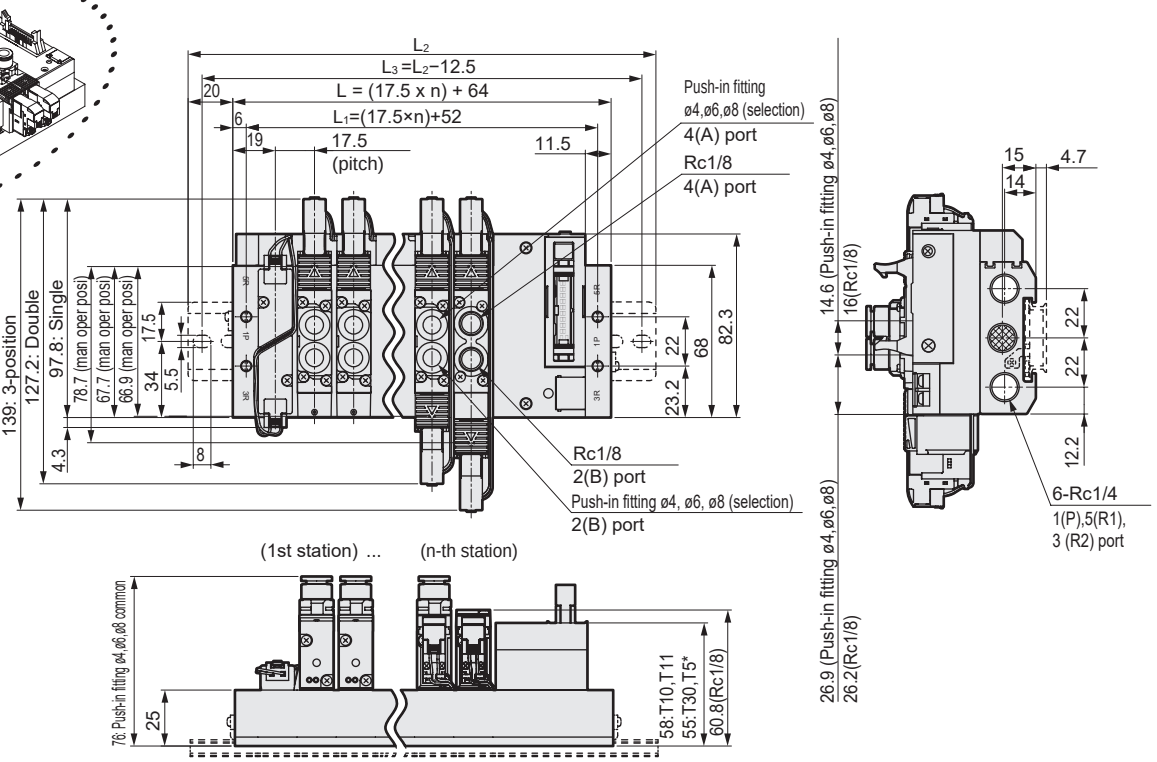

Station No.	2	3	4	5	6	7	8	9	10	11	12	13	14	15	16	17	18	19	20
L	99.0	116.5	134.0	151.5	169.0	186.5	204.0	221.5	239.0	256.5	274.0	291.5	309.0	326.5	344.0	361.5	379.0	396.5	414.0
L_1	87.0	104.5	122.0	139.5	157.0	174.5	192.0	209.5	227.0	244.5	262.0	279.5	297.0	314.5	332.0	349.5	367.0	384.5	402.0
L_2	150.0	162.5	175.0	200.0	212.5	237.5	250.0	262.5	287.5	300.0	325.0	337.5	350.0	375.0	387.5				
L_3	137.5	150.0	162.5	187.5	200.0	225.0	237.5	250.0	275.0	287.5	312.5	325.0	337.5	362.5	375.0				

Dimensions CAD

M4GA2

* Figure shows T30. Refer to pages 154 and 155 for detailed wiring block dimensions.
* For the 2-position single 3-port valve, either A port or B port is a plug.
* Refer to page 854 for mounting hole details.

● Reduced wiring left side type (T10/T11/T30/T50/T51/T52/T53)
External pilot (K)

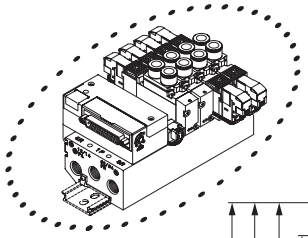

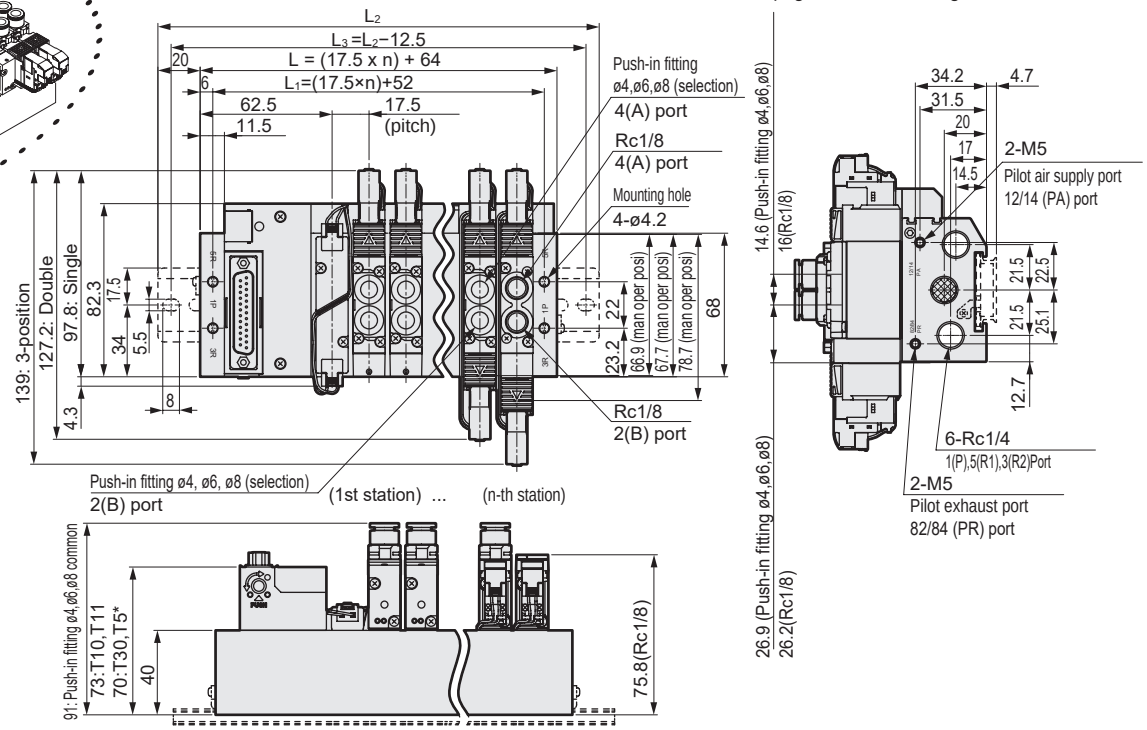

● Reduced wiring right side type (T10R/T11R/T30R/T50R/T51R/T52R/T53R)
External pilot (K)

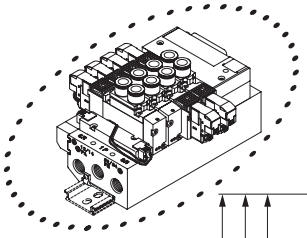

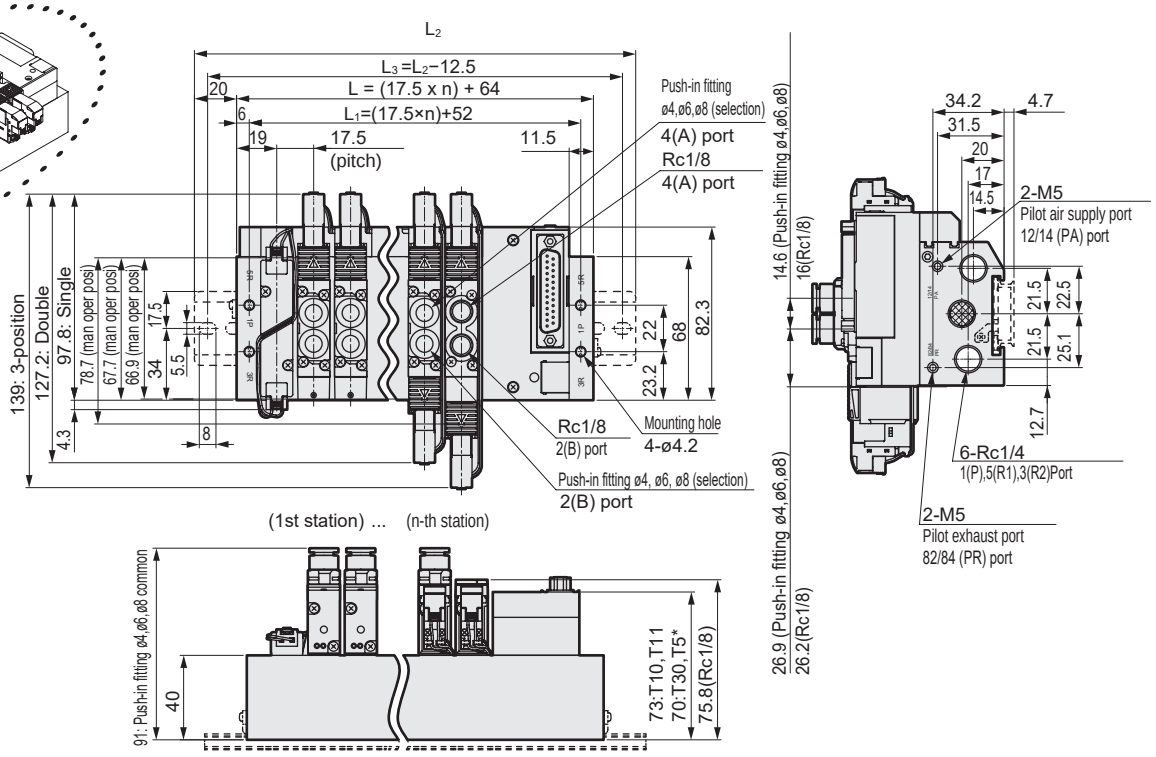

Station No.	2	3	4	5	6	7	8	9	10	11	12	13	14	15	16	17	18	19	20
L	99.0	116.5	134.0	151.5	169.0	186.5	204.0	221.5	239.0	256.5	274.0	291.5	309.0	326.5	344.0	361.5	379.0	396.5	414.0
L_1	87.0	104.5	122.0	139.5	157.0	174.5	192.0	209.5	227.0	244.5	262.0	279.5	297.0	314.5	332.0	349.5	367.0	384.5	402.0
L_2	150.0	162.5	175.0	200.0	212.5	237.5	250.0	262.5	287.5	300.0	325.0	337.5	350.0	375.0	387.5				
L_3	137.5	150.0	162.5	187.5	200.0	225.0	237.5	250.0	275.0	287.5	312.5	325.0	337.5	362.5	375.0				

Dimensions CAD

M4GA2

*For the 2-position single 3-port valve, either port A or port B is a plug. In addition, the two 3-port valve built-in type has the same dimensions as the double model.

● Serial transmission (T6G1)
DIN rail mount (D)

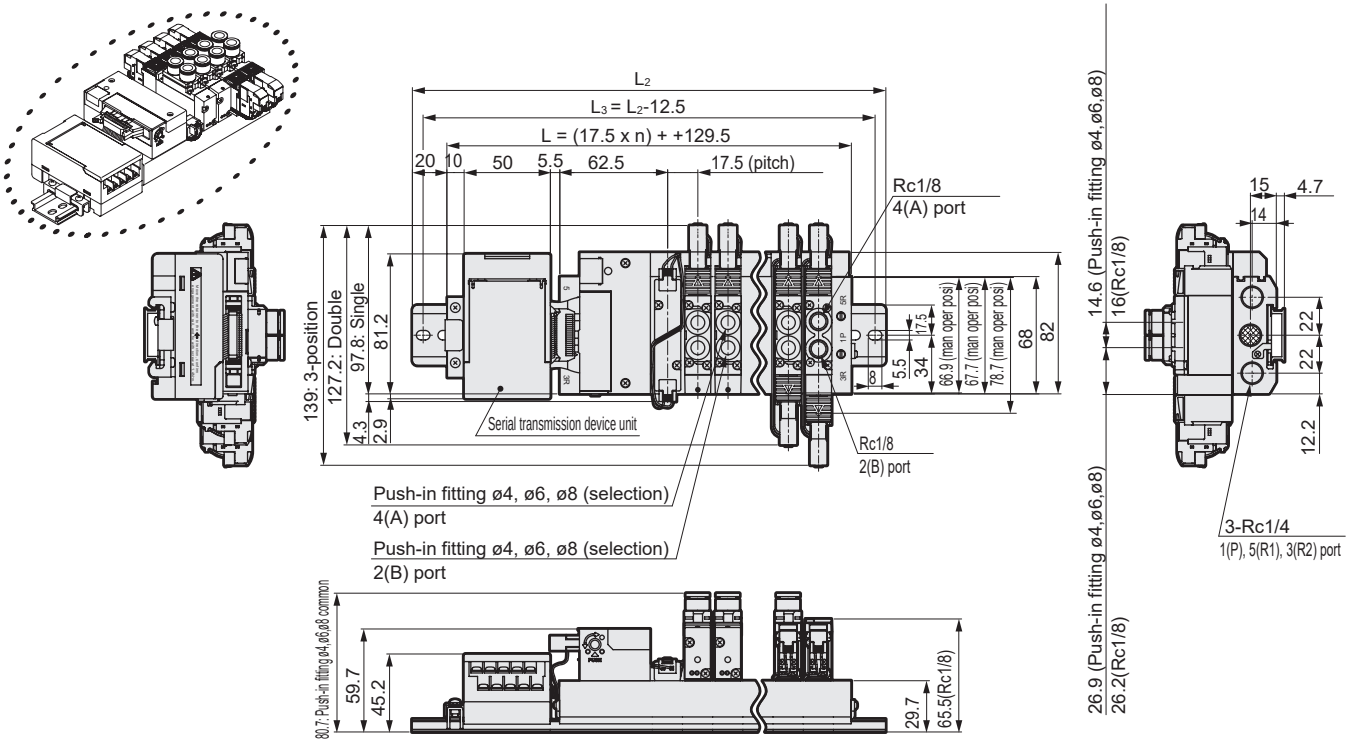

● Serial transmission (T6G1)
DIN rail mounting (D); External pilot (K)

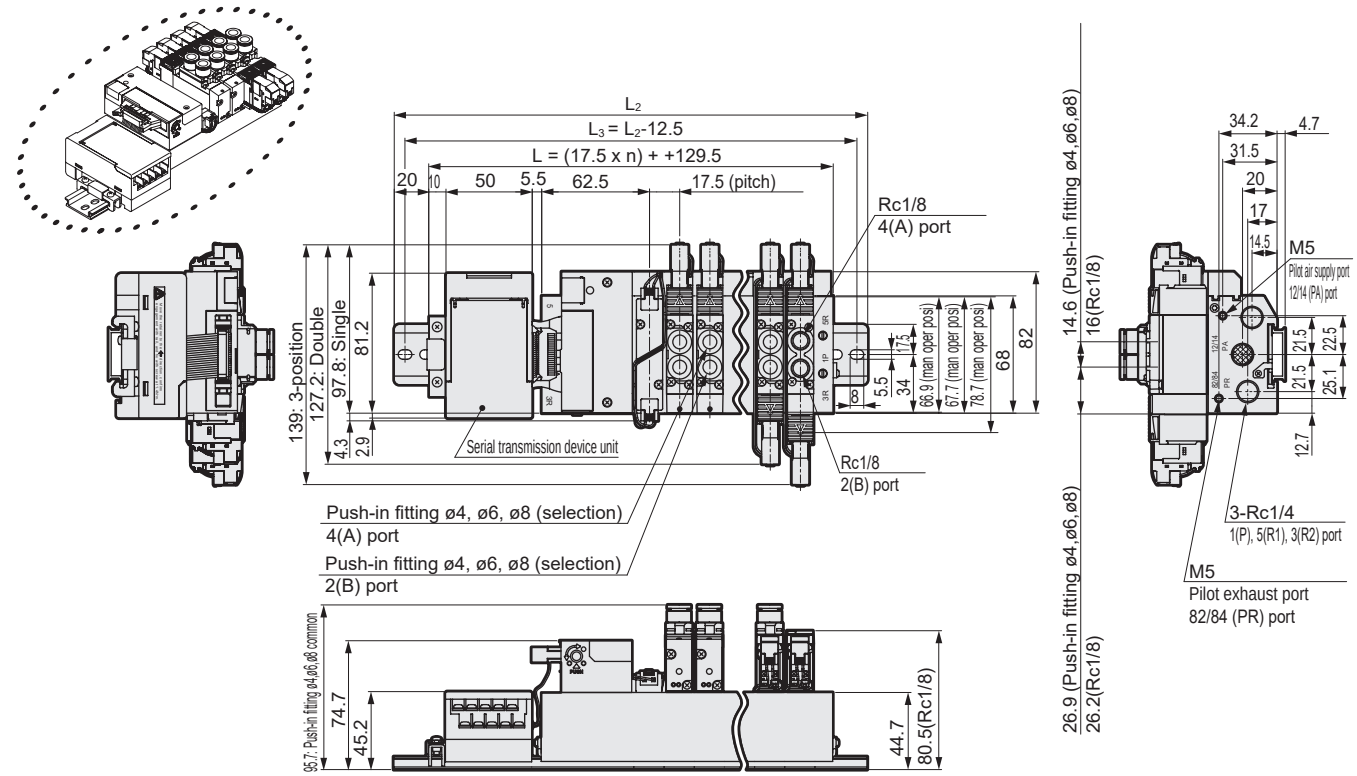

Station No.	2	3	4	5	6	7	8	9	10	11	12	13	14	15	16
L	164.5	182.0	199.5	217.0	234.5	252.0	269.5	287.0	304.5	322.0	339.5	357.0	374.5	392.0	409.5
L_2	212.5	225.0	250.0	262.5	275.0	300.0	312.5	337.5	350.0	362.5	387.5	400.0	425.0	437.5	450.0
L_3	200.0	212.5	237.5	250.0	262.5	287.5	300.0	325.0	337.5	350.0	375.0	387.5	412.5	425.0	437.5

Dimensions

M4GA2

* Refer to page 854 for mounting hole details.

● Serial transmission (T8□)
DIN rail mount (D)

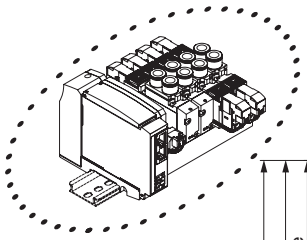

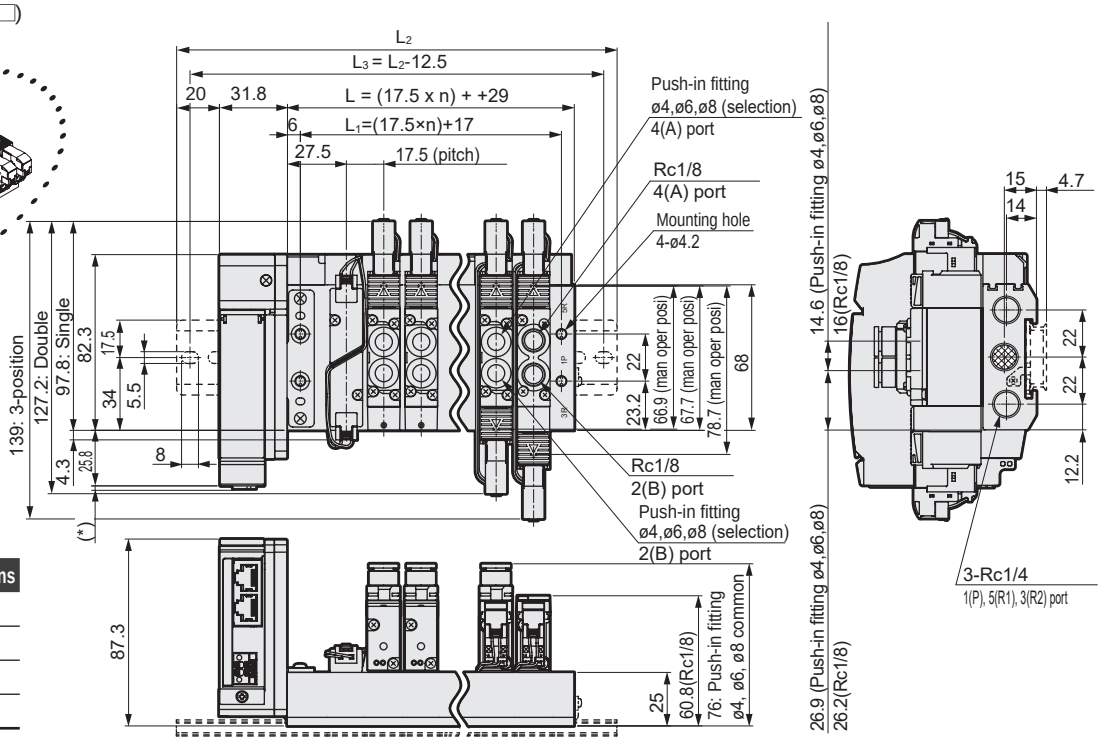

Serial transmission	(*)Dimensions
T8G □	1.0
T8P □	4.9
T8E □	1.5
T8D □	1.0

Station No.	2	3	4	5	6	7	8	9	10	11	12	13	14	15	16	17	18	19	20
L	64.0	81.5	99.0	116.5	134.0	151.5	169.0	186.5	204.0	221.5	239.0	256.5	274.0	291.5	309.0	326.5	344.0	361.5	379.0
L_1	52.0	69.5	87.0	104.5	122.0	139.5	157.0	174.5	192.0	209.5	227.0	244.5	262.0	279.5	297.0	314.5	332.0	349.5	367.0
L_2	137.5	162.5	175.0	200.0	212.5	225.0	250.0	262.5	287.5	300.0	312.5	337.5	350.0	375.0	387.5				
L_3	125.0	150.0	162.5	187.5	200.0	212.5	237.5	250.0	275.0	287.5	300.0	325.0	337.5	362.5	375.0				

M4GA2

● Serial transmission (T8□)
DIN rail mount (D); External pilot (K)

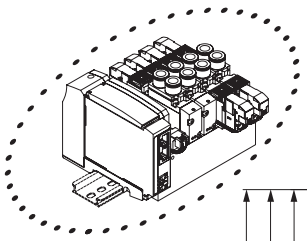

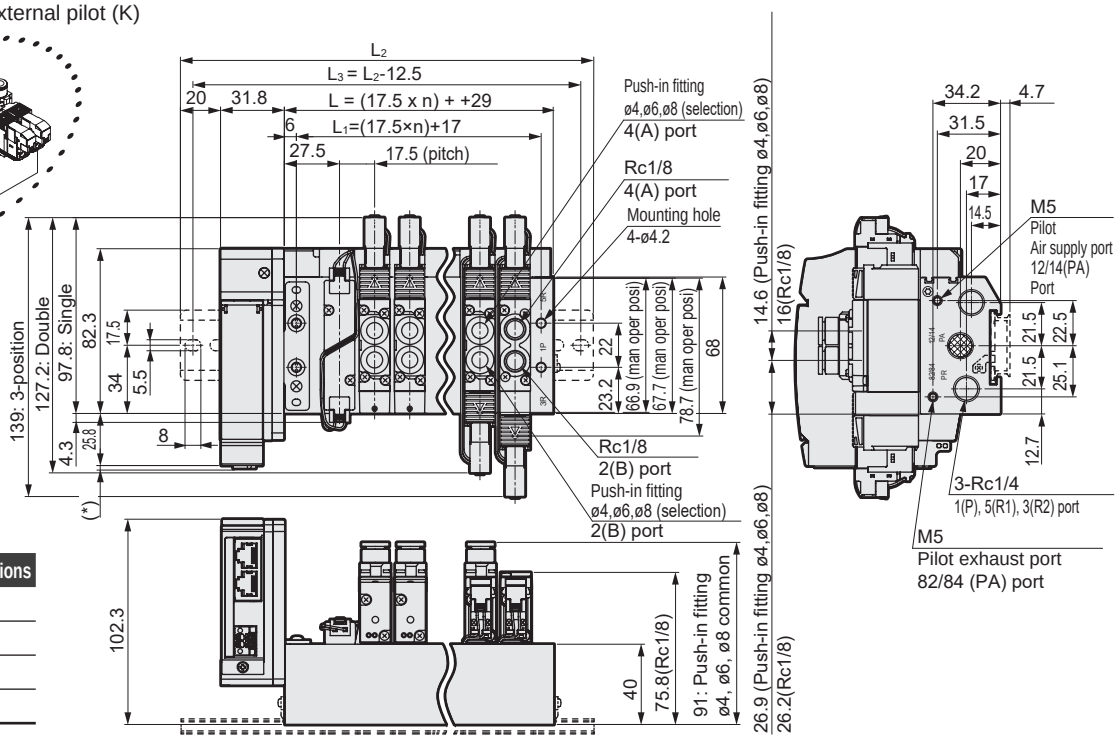

Serial transmission	(*)Dimensions
T8G □	1.0
T8P □	4.9
T8E □	1.5
T8D □	1.0

Station No.	2	3	4	5	6	7	8	9	10	11	12	13	14	15	16	17	18	19	20
L	64.0	81.5	99.0	116.5	134.0	151.5	169.0	186.5	204.0	221.5	239.0	256.5	274.0	291.5	309.0	326.5	344.0	361.5	379.0
L_1	52.0	69.5	87.0	104.5	122.0	139.5	157.0	174.5	192.0	209.5	227.0	244.5	262.0	279.5	297.0	314.5	332.0	349.5	367.0
L_2	137.5	162.5	175.0	200.0	212.5	225.0	250.0	262.5	287.5	300.0	312.5	337.5	350.0	375.0	387.5				
L_3	125.0	150.0	162.5	187.5	200.0	212.5	237.5	250.0	275.0	287.5	300.0	325.0	337.5	362.5	375.0				

Dimensions CAD

M4GA3

● Reduced wiring left side type (T10/T11/T30/T50/T51/T52/T53)

* Figure shows T50. Refer to pages 154 and 155 for detailed wiring block dimensions.
* For the 2-position single 3-port valve, either A port or B port is a plug.
* Refer to page 854 for mounting hole details.

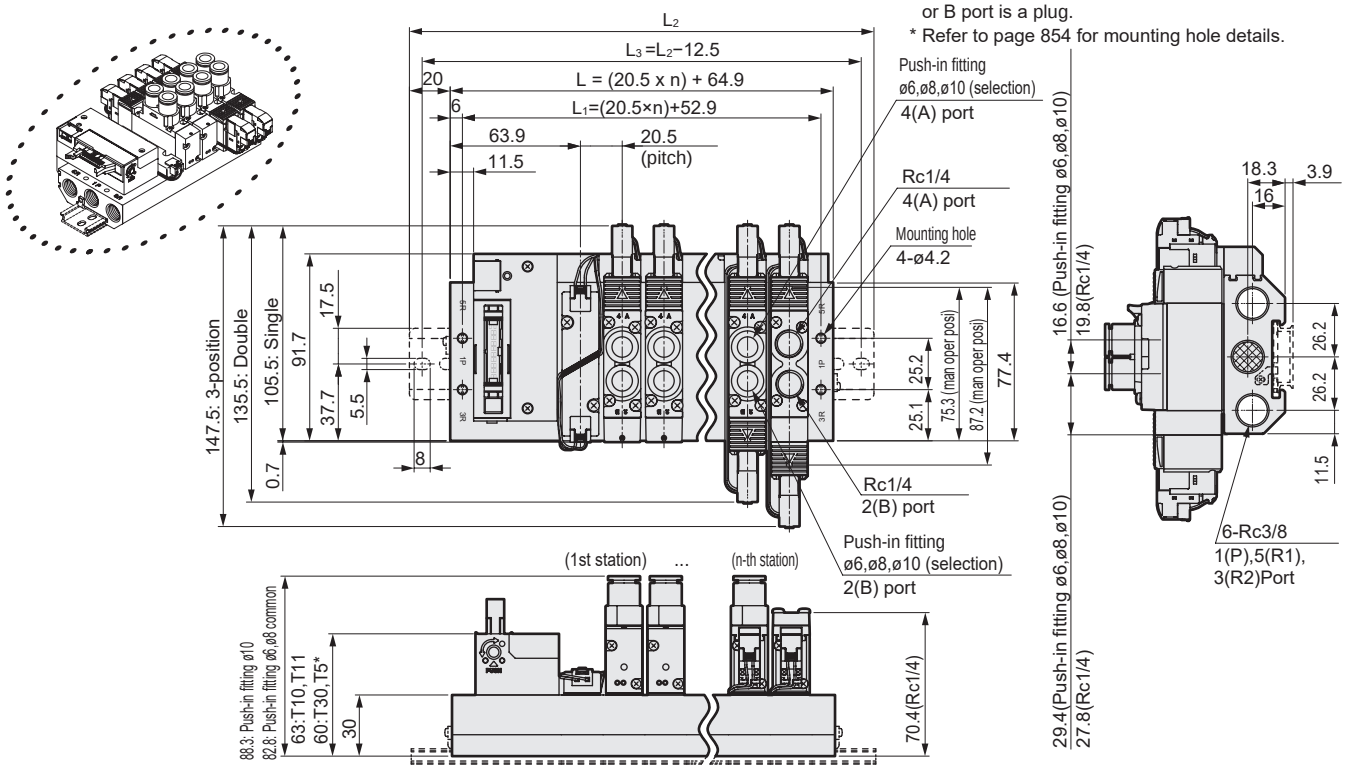

● Reduced wiring right side type (T10R/T11R/T30R/T50R/T51R/T52R/T53R)

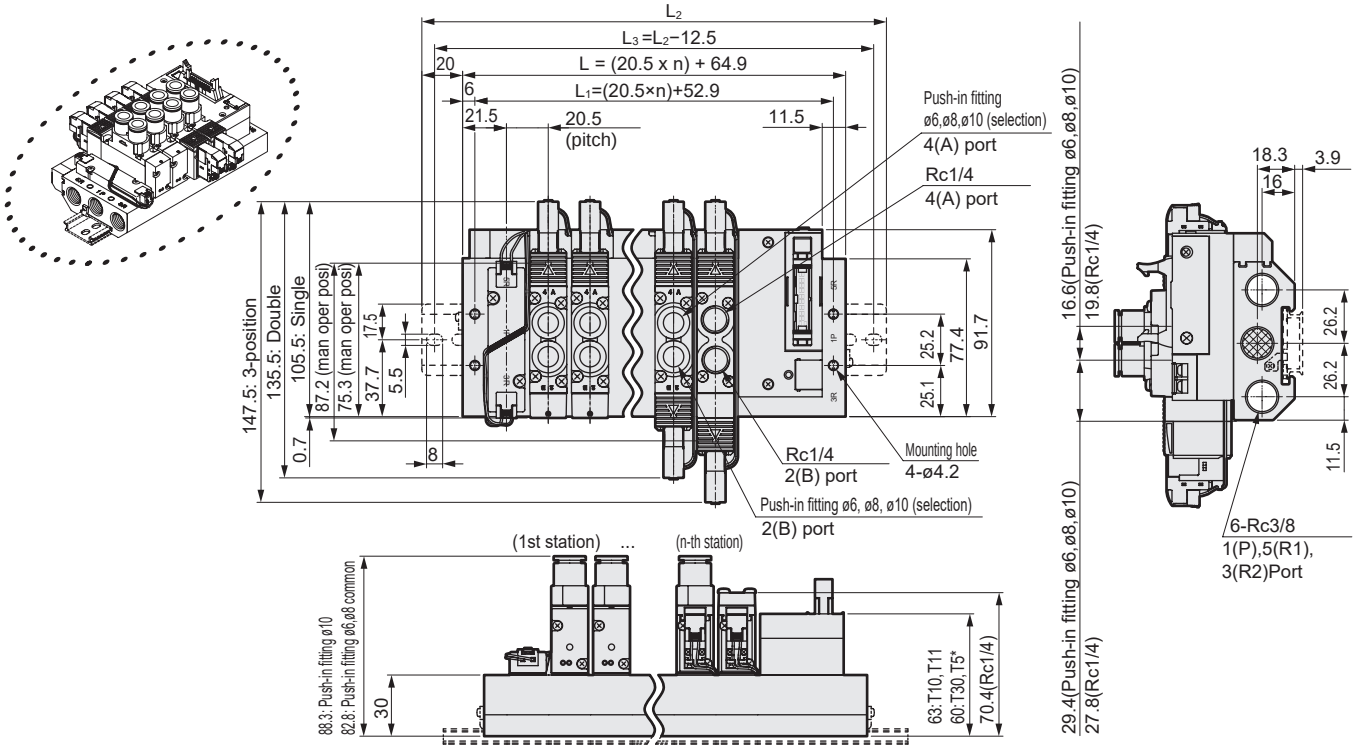

Station No.	2	3	4	5	6	7	8	9	10	11	12	13	14	15	16
L	105.9	126.4	146.9	167.4	187.9	208.4	228.9	249.4	269.9	290.4	310.9	331.4	351.9	372.4	392.9
L_1	93.9	114.4	134.9	155.4	175.9	196.4	216.9	237.4	257.9	278.4	298.9	319.4	339.9	360.4	380.9
L_2	150.0	175.0	187.5	212.5	237.5	250.0	275.0	300.0	312.5	337.5	362.5	375.0	400.0	412.5	437.5
L_3	137.5	162.5	175.0	200.0	225.0	237.5	262.5	287.5	300.0	325.0	350.0	362.5	387.5	400.0	425.0

Dimensions CAD

M4GA3

* Figure shows T30. Refer to pages 154 and 155 for detailed wiring block dimensions.
* For the 2-position single 3-port valve, either A port or B port is a plug.
* Refer to page 854 for mounting hole details.

● Reduced wiring left side type (T10/T11/T30/T50/T51/T52/T53)
External pilot (K)

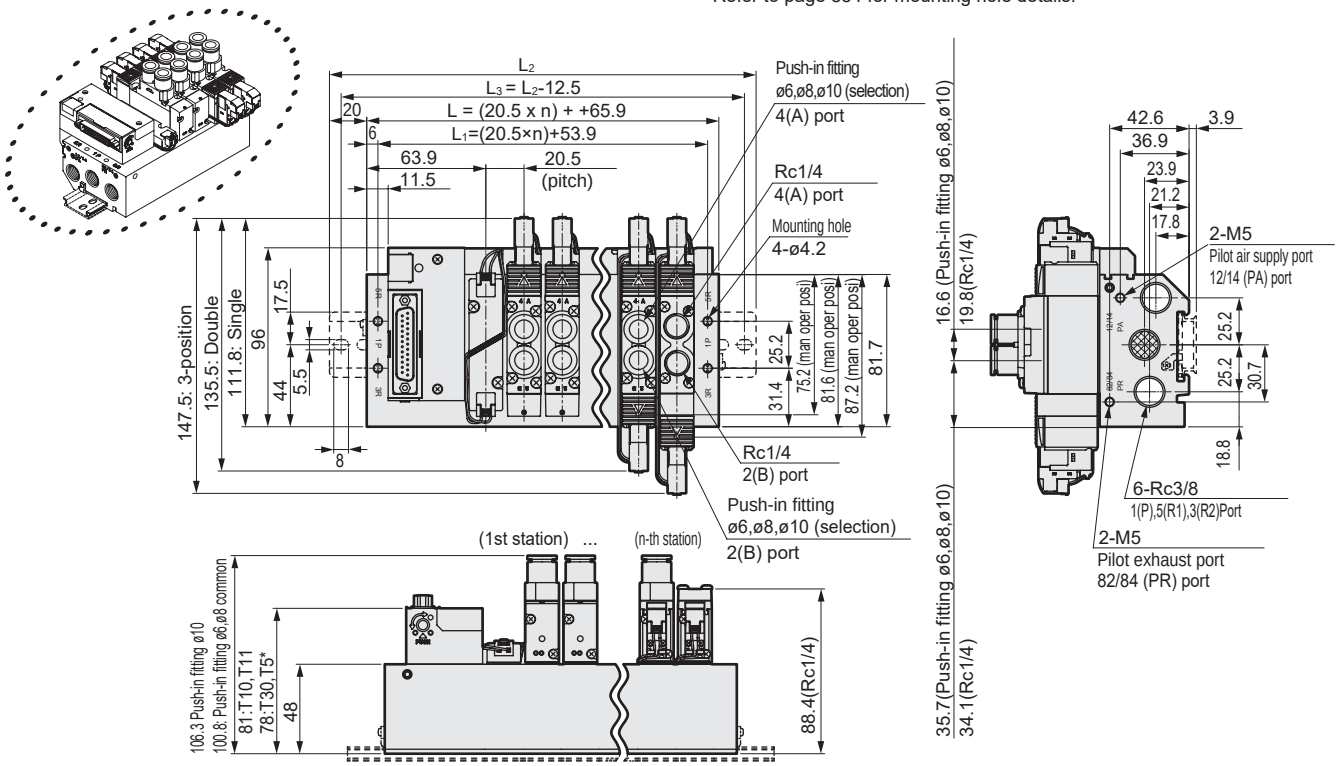

● Reduced wiring right side type (T10R/T11R/T30R/T50R/T51R/T52R/T53R)
External pilot (K)

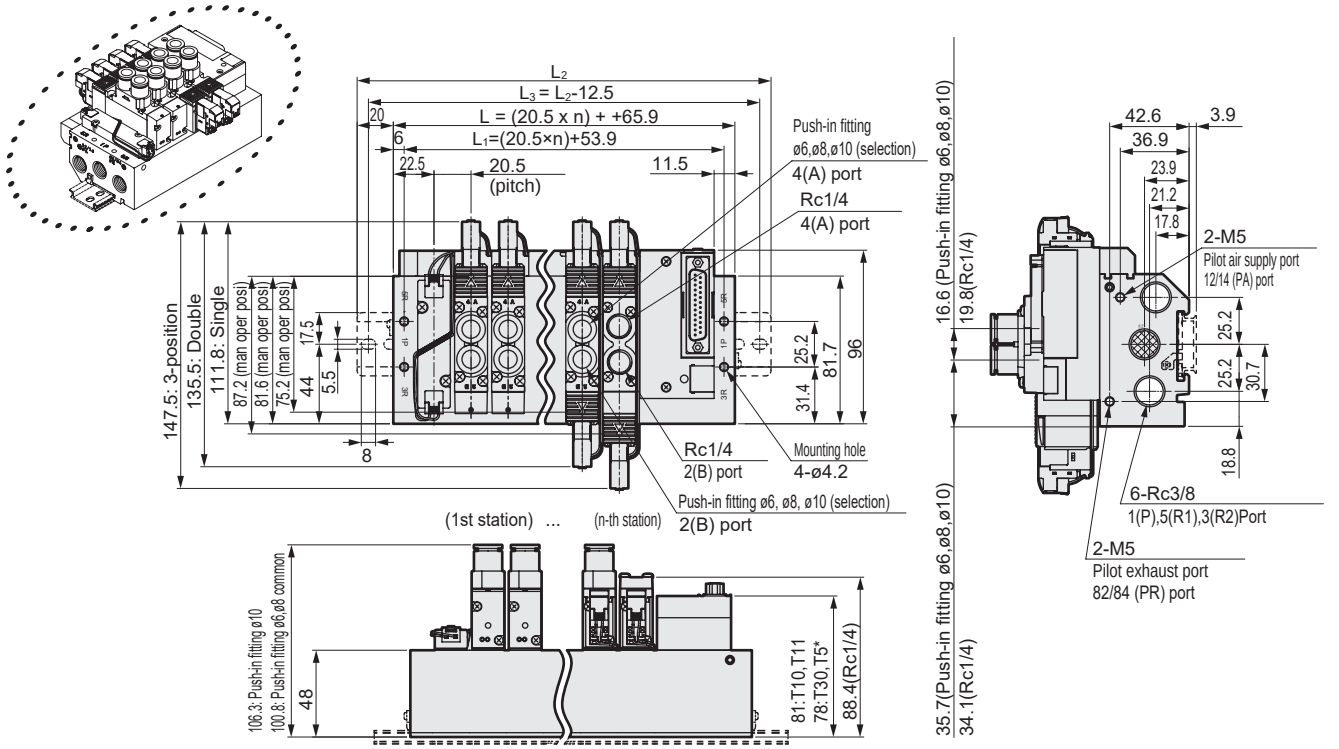

Station No.	2	3	4	5	6	7	8	9	10	11	12	13	14	15	16
L	106.9	127.4	147.9	168.4	188.9	209.4	229.9	250.4	270.9	291.4	311.9	332.4	352.9	373.4	393.9
L_1	94.9	115.4	135.9	156.4	176.9	197.4	217.9	238.4	258.9	279.4	299.9	320.4	340.9	361.4	381.9
L_2	150.0	175.0	200.0	212.5	237.5	250.0	275.0	300.0	312.5	337.5	362.5	375.0	400.0	425.0	437.5
L_3	137.5	162.5	187.5	200.0	225.0	237.5	262.5	287.5	300.0	325.0	350.0	362.5	387.5	412.5	425.0

Dimensions

M4GA3

● Serial transmission (T6G1)
DIN rail mounting (D)

* For the 2-position single 3-port valve, either A port or B port is a plug.

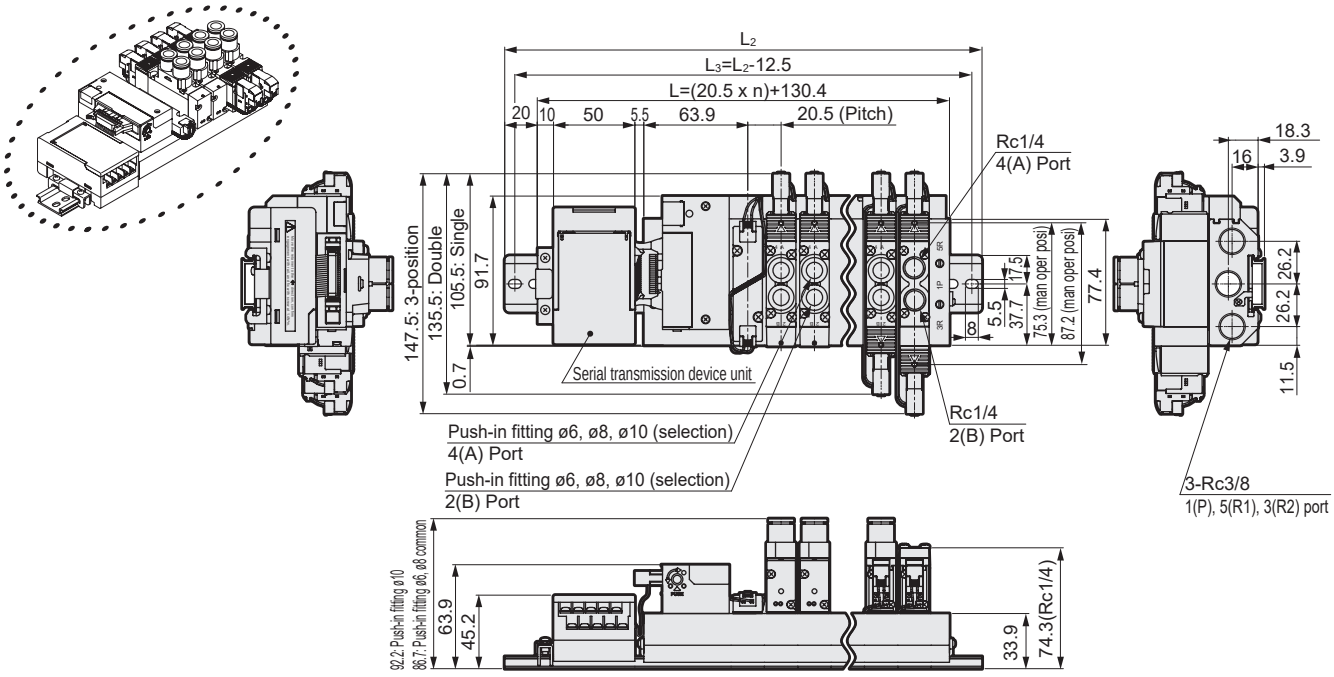

Stn No.	2	3	4	5	6	7	8	9	10	11	12	13	14	15	16
L	171.4	191.9	212.4	232.9	253.4	273.9	294.4	314.9	335.4	355.9	376.4	396.9	417.4	437.9	458.4
L_2	212.5	237.5	262.5	275.0	300.0	325.0	337.5	362.5	387.5	400.0	425.0	437.5	462.5	487.5	500.0
L_3	200.0	225.0	250.0	262.5	287.5	312.5	325.0	350.0	375.0	387.5	412.5	425.0	450.0	475.0	487.5

M4GA3

● Serial transmission (T6G1)
DIN rail mounting (D);
External pilot (K)

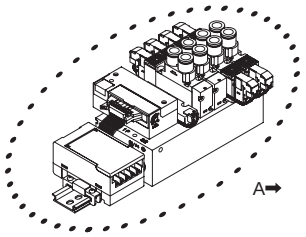

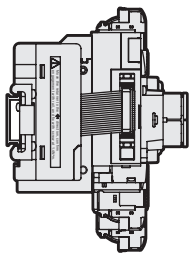

A arrow view

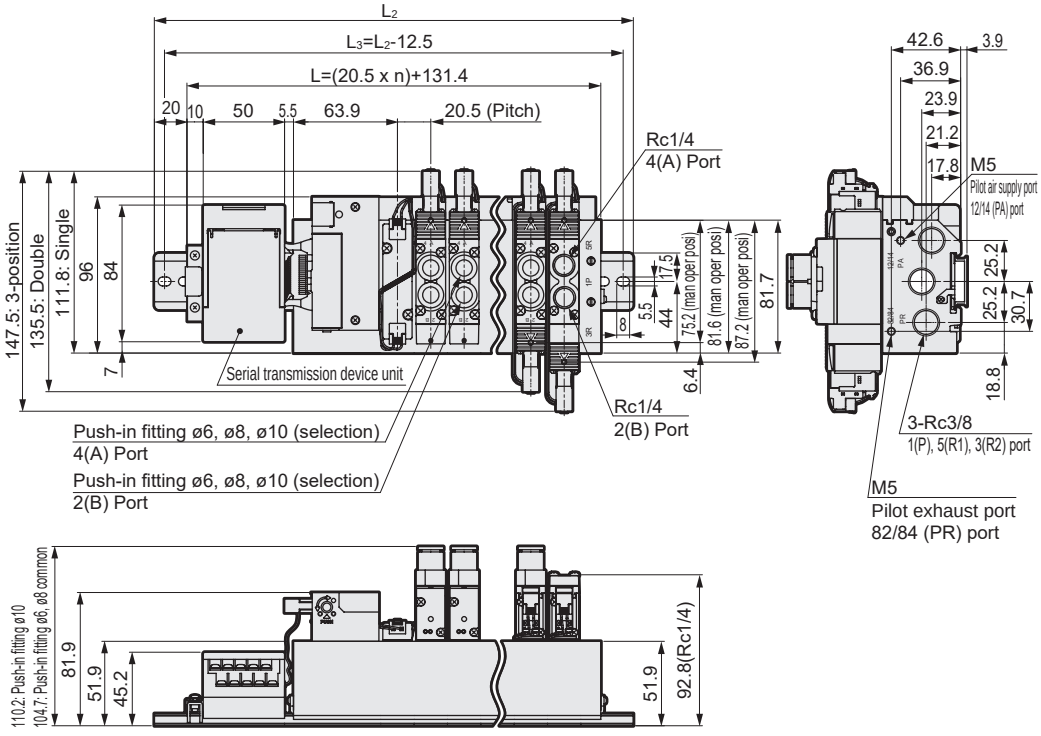

Stn No.	2	3	4	5	6	7	8	9	10	11	12	13	14	15	16
L	172.4	192.9	213.4	233.9	254.4	274.9	295.4	315.9	336.4	356.9	377.4	397.9	418.4	438.9	459.4
L_2	212.5	237.5	262.5	275.0	300.0	325.0	337.5	362.5	387.5	400.0	425.0	437.5	462.5	487.5	500.0
L_3	200.0	225.0	250.0	262.5	287.5	312.5	325.0	350.0	375.0	387.5	412.5	425.0	450.0	475.0	487.5

Dimensions

M4GA3

* Refer to page 854 for mounting hole details.

● Serial transmission (T8□)
DIN rail mount (D)

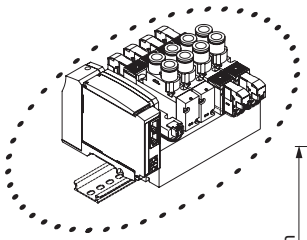

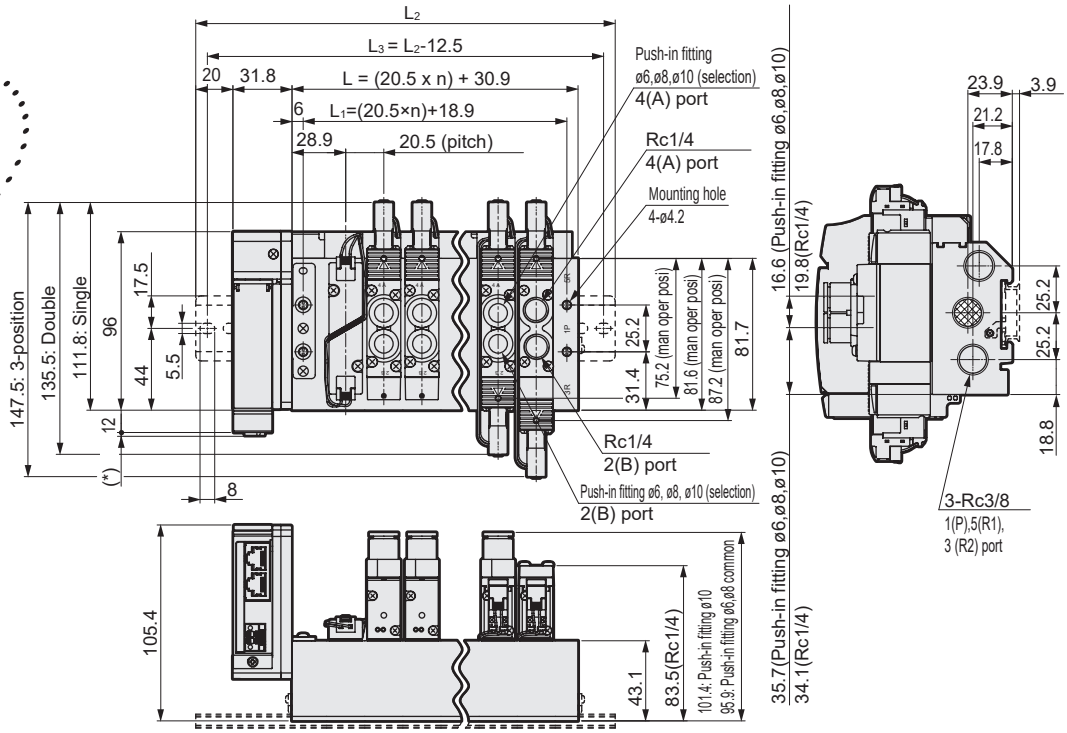

Serial transmission	(*)Dimensions
T8G □	1.0
T8P □	4.9
T8E □	1.5
T8D □	1.0

Station No.	2	3	4	5	6	7	8	9	10	11	12	13	14	15	16
L	71.9	92.4	112.9	133.4	153.9	174.4	194.9	215.4	235.9	256.4	276.9	297.4	317.9	338.4	358.9
L_1	59.9	80.4	100.9	121.4	141.9	162.4	182.9	203.4	223.9	244.4	264.9	285.4	305.9	326.4	346.9
L_2	150.0	175.0	187.5	212.5	237.5	250.0	275.0	287.5	312.5	337.5	350.0	375.0	400.0	412.5	437.5
L_3	137.5	162.5	175.0	200.0	225.0	237.5	262.5	275.0	300.0	325.0	337.5	362.5	387.5	400.0	425.0

M4GA3

● Serial transmission (T8□)
DIN rail mount (D); External pilot (K)

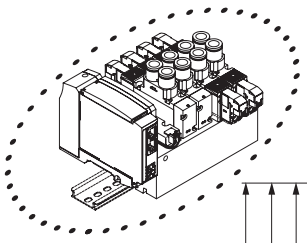

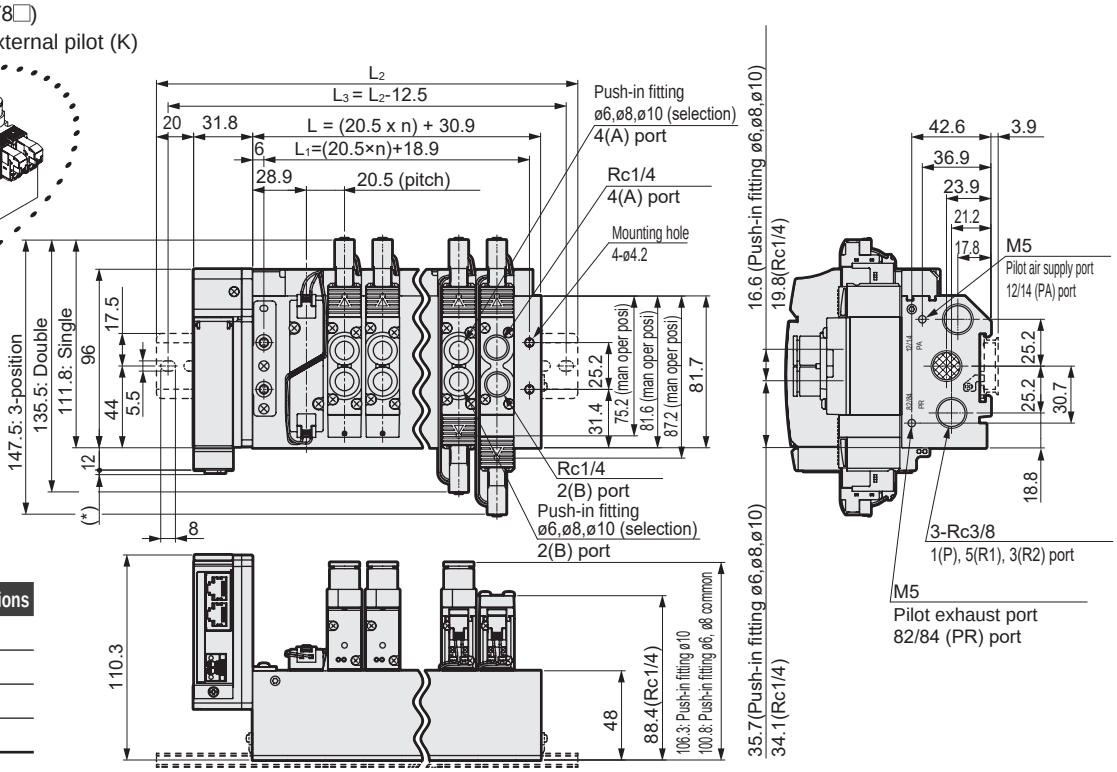

Serial transmission	(*)Dimensions
T8G □	1.0
T8P □	4.9
T8E □	1.5
T8D □	1.0

Station No.	2	3	4	5	6	7	8	9	10	11	12	13	14	15	16
L	71.9	92.4	112.9	133.4	153.9	174.4	194.9	215.4	235.9	256.4	276.9	297.4	317.9	338.4	358.9
L_1	59.9	80.4	100.9	121.4	141.9	162.4	182.9	203.4	223.9	244.4	264.9	285.4	305.9	326.4	346.9
L_2	150.0	175.0	187.5	212.5	237.5	250.0	275.0	287.5	312.5	337.5	350.0	375.0	400.0	412.5	437.5
L_3	137.5	162.5	175.0	200.0	225.0	237.5	262.5	275.0	300.0	325.0	337.5	362.5	387.5	400.0	425.0

Wiring block part: Dimensions

● Common terminal block (M3 thread) T10

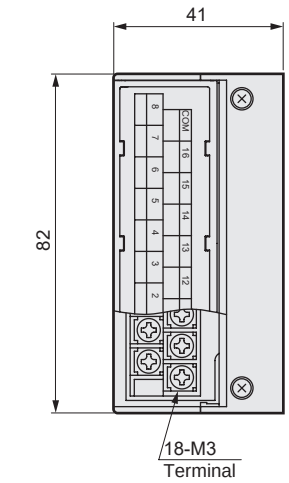

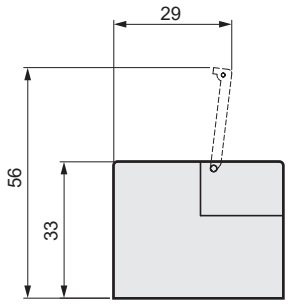

● Common terminal block (clamping) T11

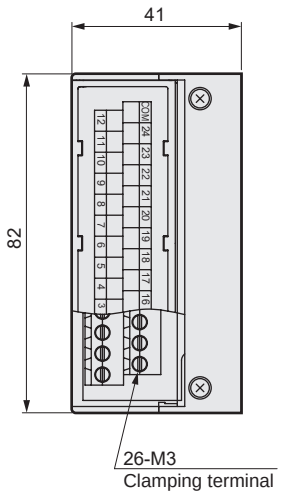

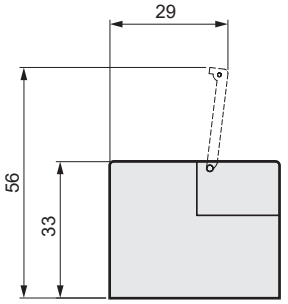

● D-sub-connector T30

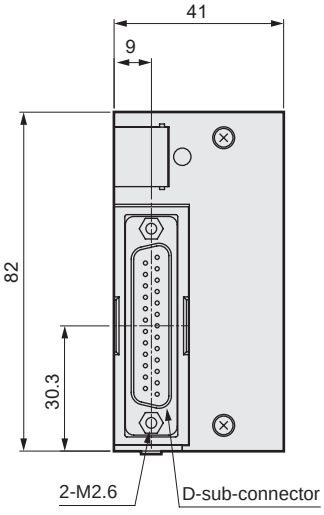

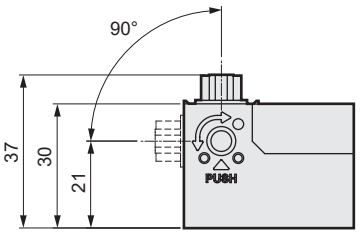

● 20-pin flat cable connector (with power supply terminal) T50

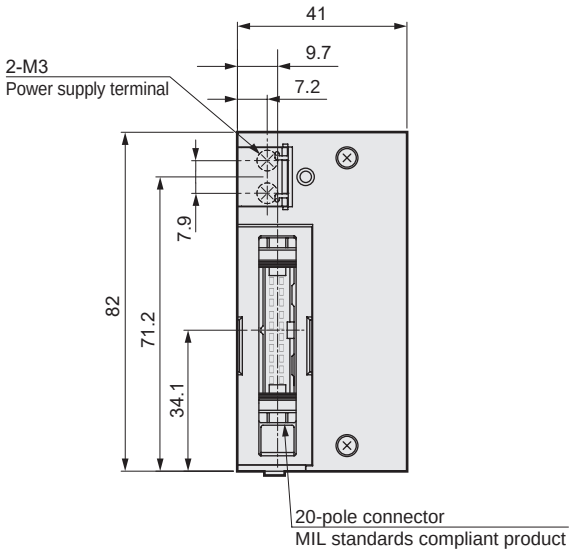

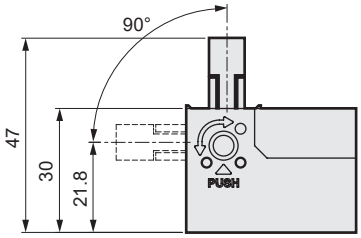

Wiring block part: Dimensions

● 20-pin flat cable connector (without power supply terminal)
T51

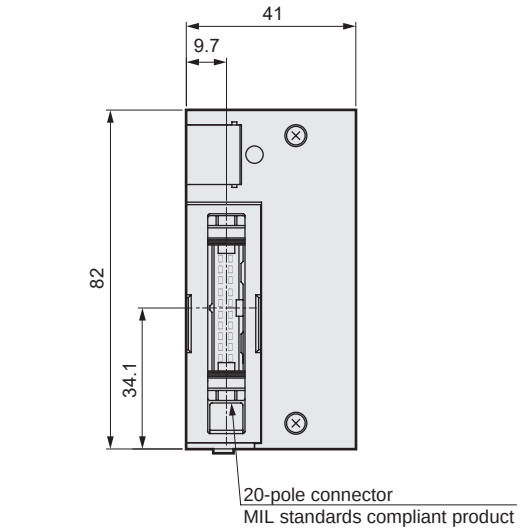

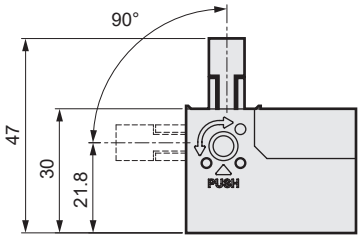

● 10-pin flat cable connector (without power supply terminal)
T52

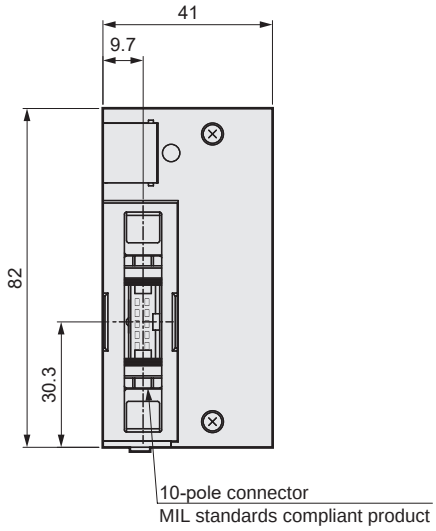

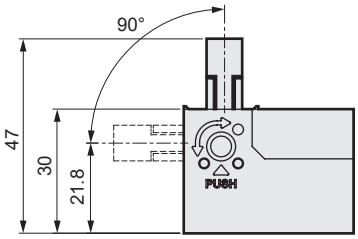

● 26-pin flat cable connector (without power supply terminal)
T53

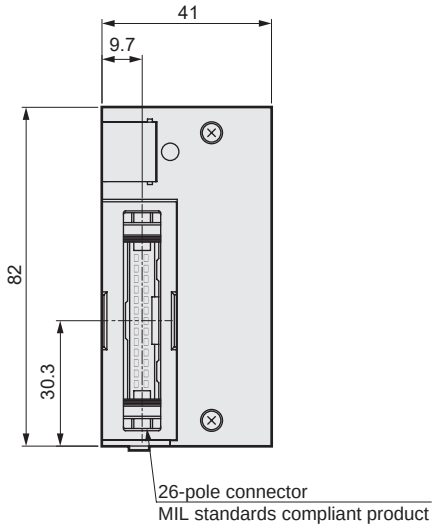

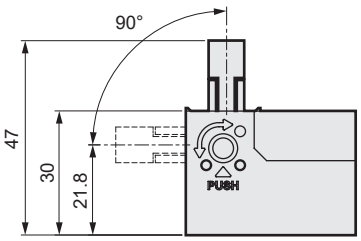

● Single unit serial transmission device (adapter) station (connector connection)

4GR − OPP3 − 1G

Ⓐ Wiring method

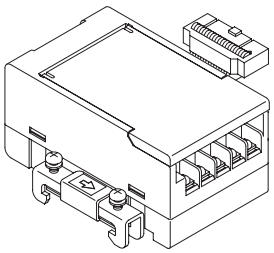

Code	Description			
Ⓐ Wiring method				
1G	T6G1	CC-LINK	NPN	16 points

● Single unit serial transmission device (adapter) station (slim slot)

4GR − OPP7 − 2G

Ⓐ Wiring method

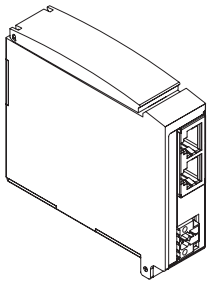

Code	Description			
Ⓐ Wiring method				
1G	T8G1	CC-Link	NPN	16 points
2G	T8G2			32 points
1G-P	T8GP1		PNP	16 points
2G-P	T8GP2			32 points
1P	T8P1	PROFIBUS-DP	NPN	16 points
2P	T8P2			32 points
1P-P	T8PP1		PNP	16 points
2P-P	T8PP2			32 points
1EC	T8EC1	EtherCAT	NPN	16 points
2EC	T8EC2			32 points
1EC-P	T8ECP1		PNP	16 points
2EC-P	T8ECP2			32 points
1EN	T8EN1	EtherNet/IP	NPN	16 points
2EN	T8EN2			32 points
1EN-P	T8ENP1		PNP	16 points
2EN-P	T8ENP2			32 points
1D	T8D1	DeviceNet	NPN	16 points
2D	T8D2			32 points
1D-P	T8DP1		PNP	16 points
2D-P	T8DP2			32 points
1EB	T8EB1	CC-Link IEF Basic	NPN	16 points
2EB	T8EB2			32 points
1EB-P	T8EBP1		PNP	16 points
2EB-P	T8EBP2			32 points
1EP	T8EP1	PROFINET	NPN	16 points
2EP	T8EP2			32 points
1EP-P	T8EPP1		PNP	16 points
2EP-P	T8EPP2			32 points

MEMO

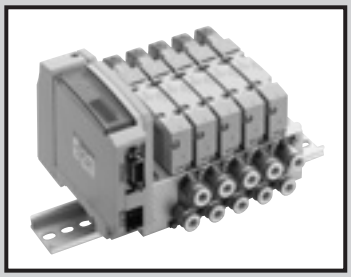

Reduced wiring manifold
Base piping
Direct mount/DIN rail mount

M3GB1/2-T*(D) Series
M4GB1/2/3-T*(D) Series

• Cylinder bore size: ø20 to ø100

RoHS CAD

JIS symbol

● Two 3-port valves integrated

(A side valve: NC, B side valve: NC)

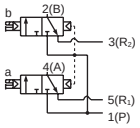

(A side valve: NC, B side valve: NO)

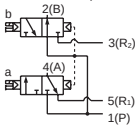

(A side valve: NO, B side valve: NC)

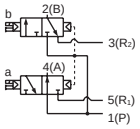

(A side valve: NO, B side valve: NO)

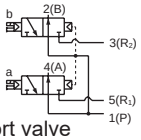

● 5-port valve

2-position single

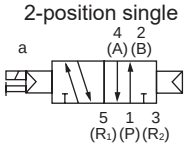

2-position double

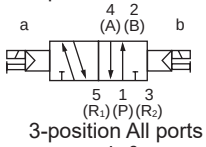

3-position All ports closed

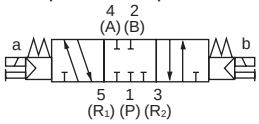

3-position A/B/R connection

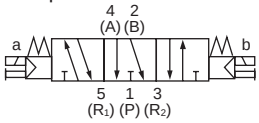

3-position P/A/B connection

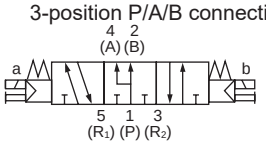

Manifold common specifications

Item		Description
Manifold		Reduced wiring integrated base
Mounting method		Direct mount/DIN rail mount
Supply and exhaust method		Common supply/common exhaust (With internal exhaust check valve)
Pilot exhaust method	Internal pilot	Main valve/pilot valve common exhaust (Pilot exhaust check valve built-in)
	External pilot	Main valve/pilot valve individual exhaust
Piping direction		Lateral direction from base
Valve and operation		Pilot operated soft spool valve
Working fluid		Compressed air
Max. working pressure MPa		0.7 (≈100 psi, 7 bar)
Min. working pressure MPa		0.2 (≈29 psi, 2 bar) (*3)
Proof pressure MPa		1.05 (≈150 psi, 10.5 bar)
Ambient temperature °C		-5 (23°F) to 55 (131°F) (no freezing)
Fluid temperature °C		5 (41°F) to 55 (131°F)
Manual override		Non-locking/locking common (standard)
Lubrication (*1)		Not required
Degree of protection (*2)		Dust-proof
Vibration resistance m/s²		50 or less
Shock resistance m/s²		300 or less
Atmosphere		Cannot be used in corrosive gas environments

Electrical specifications

Item		Description		
Rated voltage V		T1□, T30□, T5□		T6G1, T8□
		24 DC	12 DC	24 DC
V fluctuation range (*4)		±10%		+10%, -5%
Holding current A	Standard	0.017	0.034	0.017
	With low exoergic/ energy saving circuit	0.005	0.010	0.005
Power (W)	Standard	0.4		
	With low exoergic/ energy saving circuit	0.1		
Thermal class		B		
Surge suppressor (*5)		Zener diode		
Indicator		LED		

*1 Use turbine oil Class 1 ISO VG32 for lubrication. Excessive or intermittent lubrication results in unstable operation.
*2 Avoid dripping water or oil, etc., during use.
*3 The working pressure range is 0 to 0.7 MPa when the external pilot (option code: K) is selected. Set the external pilot pressure between 0.2 and 0.7 MPa.
*4 T6G1 and T8□ (serial transmission) may experience voltage drops due to internal circuitry, so care should be taken when regulating voltages.
*5 If low exoergic/energy saving circuit or surgeless types are selected then there will be a diode.

Common specifications

Item		M3GB1/M4GB1	M3GB2/M4GB2	M3GB3/M4GB3
Port size	A/B Port	Barbed fitting ø1.8 Push-in fitting ø1.8, ø4, ø6, ø8 (*6) M5	Push-in fitting ø4, ø6, ø8, ø10 (*6) Rc1/8	Push-in fitting ø6, ø8, ø10 Rc1/4
	P/R1/R2 port	Rc1/8	Rc1/4	Rc3/8

*6 Available as custom order.

T1 □, T30 □, T5 □

Item		M3GB1/M4GB1		M3GB2/M4GB2		M3GB3/M4GB3	
		Direct mount	DIN rail mount	Direct mount	DIN rail mount	Direct mount	DIN rail mount
Max. station No.	Standard (Internal pilot)	20 stations	16 stations	20 stations	16 stations	16 stations	
	External pilot	12 stations					
Manifold base weight calculation formula (n: station No.) g	Standard	43n+335	45n+348	80n+398	82n+431	124n+548	126n+582
	External pilot	44n+330	46n+344	88n+433	90n+467	129n+577	131n+606

T6G1

Item		M3GB1/M4GB1	M3GB2/M4GB2	M3GB3/M4GB3
		DIN rail mount	DIN rail mount	DIN rail mount
Max. station No.	Standard (Internal pilot)	16 stations	16 stations	16 stations
	External pilot	12 stations		
Manifold base weight calculation formula (n: station No.) g	Standard	45n+495	82n+578	126n+729
	External pilot	46n+491	90n+615	131n+753

T8 □

Item		M3GB1/M4GB1		M3GB2/M4GB2		M3GB3/M4GB3	
		Direct mount	DIN rail mount	Direct mount	DIN rail mount	Direct mount	DIN rail mount
Max. station No.	Standard (Internal pilot)	20 stations	16 stations	20 stations	16 stations	16 stations	
	External pilot	12 stations					
Manifold base weight calculation formula (n: station No.) g	Standard	46n+305	49n+332	83n+318	86n+350	128n+384	132n+416
	External pilot	48n+312	51n+339	91n+336	94n+368	146n+417	150n+449

The manifold base weight is the value for screw connection specifications with DIN rail, wiring block or device unit.
The max. station number of the manifold is limited by the max. number of solenoid for each of the following wiring specifications.

Flow characteristics

Model No.	Solenoid position		P → A/B		A/B→R1/R2	
			C[dm³/(s·bar)]	b	C[dm³/(s·bar)]	b
M3GB1 M4GB1	Two 3-port valves integrated		0.86	0.35	1.1 (0.67)	0.22 (0.23)
	2-position		1.1	0.22	1.2 (0.70)	0.20 (0.10)
	3-position	All ports closed	0.98	0.22	1.1 -	0.24 -
		ABR connection	0.97	0.35	1.3 (0.68)	0.22 (0.24)
		PAB connection	1.1	0.38	1.1 -	0.21 -
M3GB2 M4GB2	Two 3-port valves integrated		1.7	0.44	2.1 (1.6)	0.32 (0.30)
	2-position		2.4	0.34	2.7 (1.7)	0.24 (0.31)
	3-position	All ports closed	2.2	0.34	2.4 -	0.29 -
		ABR connection	2.2	0.34	2.8 (1.8)	0.24 (0.27)
		PAB connection	2.4	0.29	2.4 -	0.29 -
M4GB3	2-position		3.5	0.34	3.8 (2.6)	0.11 (0.27)
	3-position	All ports closed	3.1	0.33	3.3 -	0.22 -
		ABR connection	3.0	0.30	3.8 (2.7)	0.11 (0.22)
		PAB connection	3.6	0.36	3.3 -	0.28 -

*1: Effective cross-sectional area S and sonic conductance C are converted as S ≈ 5.0 × C. *2: Values in ( ) are with the exhaust check valve.

Wiring specifications

Item	T10 □ Common terminal block	T11 □ Common terminal block	T30 □ DSub-connector	T50 □ Flat cable 20-pin	T51 □ Flat cable 20-pin	T52 □ Flat cable 10-pin	T53 □ Flat cable 26-pin
Connector and terminal block specifications	M3 thread tightening Terminal count 18	Clamping Terminal count 26	D-sub-connector 25-pin	MIL-C-83503 standard compliant Pressure welding socket 20-pin	MIL-C-83503 standard compliant Pressure welding socket 20-pin	MIL-C-83503 standard compliant Pressure welding socket 10-pin	MIL-C-83503 standard compliant Pressure welding socket 26Pin
Max. number of solenoids	16 points	24 points	24 points	16 points	18 points	8 points	24 points
Manifold internal wiring	Details on pages 816 to 823						
Wiring block position Blank: Left side R: Right side	Left side: T □ 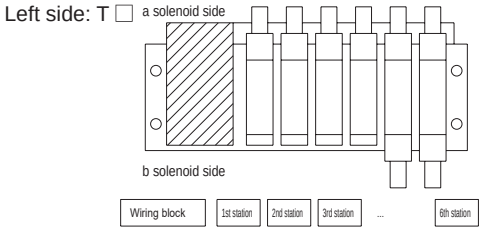 Right side: T □ R 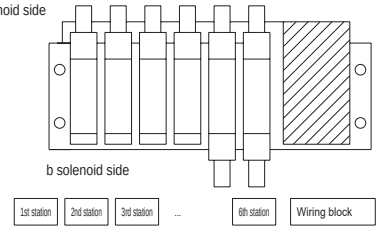						
Array method Blank: Standard sequential W: Double wiring	(Ex.) In the case of T50 □ Manifold specifications 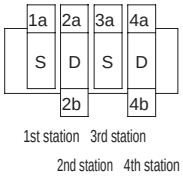 Standard wiring (sequential): Blank Connector pin No. 1 2 3 4 5 6 Valve solenoid No. 1a 2a 2b 3a 4a 4b Double wiring: W Connector pin No. 1 2 3 4 5 6 7 8 Valve solenoid No. 1a Blank 2a 2b 3a Blank 4a 4b						

Serial transmission device unit specifications

Download the communication setting file from the CKD website (https://www.ckd.co.jp/en/).

Item		T6G1
Network name		CC-Link ver1.10
Power supply voltage	Unit side	24 VDC ±10%
	Valve side	24 VDC +10% −5%
Current consumption	Unit side	100mA or less (when all output points are ON)
	Valve side	15 mA or less (when all output points are OFF)
No. of output points		16 points
Occupied number		1 station
Operation display		LED (power supply and communication status)

Item		T8G1 T8G2	T8GP1 T8GP2	T8P1 T8P2	T8PP1 T8PP2	T8EC1 T8EC2	T8ECP1 T8ECP2	T8EN1 T8EN2	T8ENP1 T8ENP2	T8D1 T8D2	T8DP1 T8DP2	T8EB1 T8EB2	T8EBP1 T8EBP2	T8EP1 T8EP2	T8EPP1 T8EPP2
Communication protocol		CC-Link ver. 1.10		PROFIBUS-DP (V0)		EtherCAT		EtherNet/IP		DeviceNet		CC-Link IEF Basic		PROFINET	
Power supply voltage	Unit side	24 VDC ±10%								11 to 25 VDC		24 VDC ±10%			
	Valve side	24 VDC 10%, 5%													
Current consumption	Unit side	60 mA or less (when all output points are ON)		60 mA or less (when all output points are ON)		110 mA or less (when all output points are ON)		120 mA or less (when all output points are ON)		70 mA or less (when all output points are ON)		130 mA or less (when all output points are ON)		130 mA or less (when all output points are ON)	
	Valve side	T8 □ 1: 15 mA or less T8 □ 2: 20 mA or less (when all output points are ON) Load current is not included								15 mA or less (when all output points are ON) Load current is not included					
No. of output points		T8 □ 1: 16 points T8 □ 2: 32 points													
Occupied number		1 station													
Operation display		LED (power supply and communication status)													
Output		NPN output	PNP output	NPN output	PNP output	NPN output	PNP output	NPN output	PNP output	NPN output	PNP output	NPN output	PNP output	NPN output	PNP output

M4GB1/2/3-T*(D) Series

Reduced wiring manifold; base piping

How to order

Manifold model No.

M 4GB1 1 0R - C6 - T30 W H D - ○ - 3

3-port manifold model No.

M 3GB1 66 0R - C6 - T30 W H D - ○ - 3

● Single valve for mounting base

4GB1 1 9R - 00 - A2N ○ H — 3

● 3-port discrete valve for mounting base

3GB1 66 9R - 00 - A2N ○ H — 3

- Ⓐ Model No.
- Ⓑ Solenoid position
- Ⓒ Port size (*3) (*4)
- Ⓓ Reduced wiring connection
- Ⓔ Terminal/connector pin array
- Ⓕ Option
- Ⓖ Mount type
- Ⓗ Station No.
- Ⓘ Voltage

● For the cable with D-sub-connector model number, refer to page 819.

● Refer to page 815 for the model No. of cables for flat cable connector.

*Be sure to fill in the "Manifold specifications sheet" (pages 213 to 224).

Ⓐ Model No.	3GB1	3GB2	4GB1	4GB2	4GB3

Ⓑ Solenoid position

1	2 position single				●	●	●
2	2-position double				●	●	●
3	3-position all ports closed				●	●	●
4	3-position ABR connection				●	●	●
5	3-position PAB connection				●	●	●
66	3-port valve Two valves integrated (*1) (*2)	A side valve: Normally closed	●	●			
		B side valve: Normally closed					
67		A side valve: Normally closed	●	●			
		B side valve: Normally open					
76		A side valve: Normally open	●	●			
		B side valve: Normally closed					
77		A side valve: Normally open	●	●			
		B side valve: Normally open					
8	Mix manifold (when there are multiple solenoid positions)		●	●	●	●	●

Ⓒ Port size

Port	4(A)/2(B) port	Port P/R1/R2 (2) = Rc1/8 (3) = Rc1/4 (4) =Rc3/8				
CF	ø1.8 barbed fitting (compatible tube UP-9102-**)	②		②		
C18	ø1.8 push-in fitting (compatible tube UP-9402-**)	②		②		
C4	ø4 push-in fitting	②	③	②	③	
C6	ø6 push-in fitting	②	③	②	③	④
C8	ø8 push-in fitting (*5)(*6)	②	③	②	③	④
C10	ø10 push-in fitting (*5)(*6)		③		③	④
CL18	ø1.8 push-in L-fitting upward (compatible tube UP-9402-**)			②		
CL4	ø4 push-in L-fitting (upward)			②		
CL6	ø6 push-in L-fitting (upward)			②	③	
CL8	ø8 push-in L-fitting (upward)				③	④
CL10	ø10 push-in L-fitting (upward)					④
CD18	ø1.8 push-in L-fitting downward (compatible tube UP-9402-**)	②		②		
CD4	ø4 push-in L-fitting (downward)	②		②		
CD6	ø6 push-in L-fitting (downward)	②	③	②	③	
CD8	ø8 push-in L-fitting (downward)		③		③	④
CD10	ø10 push-in L-fitting (downward)					④
CX	Push-in fitting mix	②	③	②	③	④
M5	M5	②		②		
06	Rc1/8		③		③	
08	Rc1/4					④

Port	4(A)/2(B) port	Port P/R1/R2 (5) = 1/8NPT, (6) = 1/4NPT, (7) = 3/8NPT				
C3N	ø1/8" push-in fitting	⑤		⑤		
C4N	ø5/32" push-in fitting	⑤		⑤		
C6N	ø1/4" push-in fitting		⑥		⑥	
C8N	ø5/16" push-in fitting		⑥		⑥	⑦
C10N	ø3/8" push-in fitting					⑦
CL3N	ø1/8" push-in L-fitting (upward) (*6)			⑤		
CL4N	ø5/32" push-in L-fitting (upward) (*6)			⑤		
CL6N	ø1/4" push-in L-fitting upward (*6)				⑥	
CL8N	Radial ø5/16 push-in fitting (upward) (*6)				⑥	
CXN	Push-in fitting mix	⑤	⑥	⑤	⑥	⑦
M5N	M5	⑤		⑤		
06N	NPT1/8		⑥		⑥	
08N	NPT1/4 (*6)					⑦

Port	4(A)/2(B) port	Port P/R1/R2 (8) = G1/8, (9) = G1/4, (10) = G3/8				
C4G	ø4 push-in fitting	⑧	⑨	⑧	⑨	
C6G	ø6 push-in fitting	⑧	⑨	⑧	⑨	
C8G	ø8 push-in fitting		⑨		⑨	⑩
C10G	ø10 push-in fitting					⑩
CL4G	ø4 push-in L-fitting (upward) (*6)			⑧		
CL6G	ø6 push-in L-fitting (upward) (*6)			⑧	⑨	
CL8G	ø8 push-in L-fitting (upward) (*6)				⑨	
CXG	Push-in fitting mix	⑧	⑨	⑧	⑨	⑩
M5G	M5	⑧		⑧		
06G	G1/8		⑨		⑨	
08G	G1/4					⑩
00	Discrete valve for integrated base	●	●	●	●	●

Ⓓ Reduced wiring connection

Refer to the next page for electrical connections.

■ is not available.

⚠ Precautions for model No. selection

*1: Select M4GB*80R when mixing with 3, 5-port valves.
Further, select M3GB*80R when mixing with masking plate.

*2: Not compatible in combination with external pilot (K). Dimensions are the same as those of the respective 2-position double solenoid.

3: CL push-in L-fitting (upward) is compatible only with the single solenoid manifold. Long elbow is for port A and short elbow for port B.

*4: Ports A and B are the same size for push-in L-fittings.

*5: 4G1 C8 and 4G2 C10 do not support push-in fitting mixing.

*6: Made to order.

			Ⓐ Model No.				
			3GB1	3GB2	4GB1	4GB2	4GB3
Ⓓ Reduced wiring (lamp and surge suppressor provided as standard) 12/24 VDC							
T10	Common terminal block (M3 thread)	Left-sided specifications	●	●	●	●	●
T10R		Right-sided specifications	●	●	●	●	●
T11	Common terminal block (clamping)	Left-sided specifications	●	●	●	●	●
T11R		Right-sided specifications	●	●	●	●	●
T30	D-sub-connector	Left-sided specifications	●	●	●	●	●
T30R		Right-sided specifications	●	●	●	●	●
T50	20-pin flat cable connector (with power supply terminal)	Left-sided specifications	●	●	●	●	●
T50R		Right-sided specifications	●	●	●	●	●
T51	20-pin flat cable connector (without power supply terminal)	Left-sided specifications	●	●	●	●	●
T51R		Right-sided specifications	●	●	●	●	●
T52	10-pin flat cable connector (without power supply terminal)	Left-sided specifications	●	●	●	●	●
T52R		Right-sided specifications	●	●	●	●	●
T53	26-pin flat cable connector (without power supply terminal)	Left-sided specifications	●	●	●	●	●
T53R		Right-sided specifications	●	●	●	●	●
Ⓓ Serial transmission (lamp/surge suppressor provided as standard) 24 VDC							
T6G1	CC-Link	NPN 16 points	●	●	●	●	●
T8G1	CC-Link	NPN 16 points	●	●	●	●	●
T8G2		NPN 32 points	●	●	●	●	●
T8GP1		PNP 16 points	●	●	●	●	●
T8GP2		PNP 32 points	●	●	●	●	●
T8P1	PROFIBUS-DP	NPN 16 points	●	●	●	●	●
T8P2		NPN 32 points	●	●	●	●	●
T8PP1		PNP 16 points	●	●	●	●	●
T8PP2		PNP 32 points	●	●	●	●	●
T8EC1	EtherCAT	NPN 16 points	●	●	●	●	●
T8EC2		NPN 32 points	●	●	●	●	●
T8ECP1		PNP 16 points	●	●	●	●	●
T8ECP2		PNP 32 points	●	●	●	●	●
T8EN1	EtherNet/IP	NPN 16 points	●	●	●	●	●
T8EN2		NPN 32 points	●	●	●	●	●
T8ENP1		PNP 16 points	●	●	●	●	●
T8ENP2		PNP 32 points	●	●	●	●	●
T8D1	DeviceNet	NPN 16 points	●	●	●	●	●
T8D2		NPN 32 points	●	●	●	●	●
T8DP1		PNP 16 points	●	●	●	●	●
T8DP2		PNP 32 points	●	●	●	●	●
T8EB1	CC-Link IEF Basic	NPN 16 points	●	●	●	●	●
T8EB2		NPN 32 points	●	●	●	●	●
T8EBP1		PNP 16 points	●	●	●	●	●
T8EBP2		PNP 32 points	●	●	●	●	●
T8EP1	PROFINET	NPN 16 points	●	●	●	●	●
T8EP2		NPN 32 points	●	●	●	●	●
T8EPP1		PNP 16 points	●	●	●	●	●
T8EPP2		PNP 32 points	●	●	●	●	●
A2N	Without lead wire (without socket)	with surge suppressor and indicator lamp	●	●	●	●	●
Ⓔ Terminal/connector pin array							
Blank	Standard wiring (*7)		●	●	●	●	●
W	Double wiring (*7)		●	●	●	●	●
W1	Double wiring (with single spare wiring) (*7) (*8)		●	●	●	●	●
Ⓕ Option							
Blank	Manual override of non-locking/locking common		●	●	●	●	●
M	Manual override of non-locking		●	●	●	●	●
H	With exhaust check valve (*9)		●	●	●	●	●
K	External pilot (*10)		●	●	●	●	●
A	Ozone/coolant proof		●	●	●	●	●
S	Surgeless (*11)		●	●	●	●	●
E	Low exoergic/energy saving circuit (*11) (*12)		●	●	●	●	●
F	Port A/B filter built in (*13)		●	●	●	●	●
X	Non-locking exhaust structure (*17)				●	●	
X1	Locking exhaust structure (*17)				●	●	
Z1	Air supply spacer (*14)		●	●	●	●	●
Z2	In-stop valve spacer (*14) (*15)		●	●	●	●	●
Z3	Exhaust spacer (*14)		●	●	●	●	●
Z6	Spacer pilot check valve (*14) (*16)				●	●	
Ⓖ Mount type							
Blank	Direct mount		●	●	●	●	●
D	DIN rail mount		●	●	●	●	●
Ⓗ Station No.							
2	2 stations		●	●	●	●	●
to	to						
20	Refer to page 158 for the max. station No. per model.						
Ⓘ Voltage							
3	24 VDC		●	●	●	●	●
4	12 VDC		●	●	●	●	●

Ozone-proof specifications • Coolant proof specifications

Select option "A" of Item Ⓕ in How to order.

Clean-room specifications

● Anti-dust generation structure for use in cleanrooms

** - Voltage - **P7***

Specifications for rechargeable battery (Catalog No. CC-1226A)

● For use in the rechargeable battery manufacturing process, parts materials used for air path and sliding section are limited

** - Voltage - **P4**

CE marking specifications

** - Voltage - **ST**

• Standard voltage of 24 VDC or less is CE marking-compatible even if the model No. is not indicated with "ST".

⚠ Precautions for model No. selection

*7: Blank...The wiring is based on the type of valve equipped.
W*...All wired for double solenoid valves regardless of the type of valve equipped.

*8: Spare wiring (A type socket assembly) is included on the cap side for single types. A holder for retaining the socket assembly is included for single unit valves (A2N). For details, refer to page 197.

*9: 3-position all ports closed and PAB connection are not provided with the exhaust check valve specifications (H). Refer to page 851 for details on the exhaust check valve.

*10: Consult with CKD when using a vacuum with the external pilot (K).

*11: In addition, surgeless "S" and low exoergic/energy saving circuit "E" cannot be selected together.

*12: Surgeless specifications.

*13: A filter is built into port P as standard.

*14: Specify the spacer mounting position and quantity on the manifold specifications sheet. Stacking of spacers is not possible.
Combination with the masking plate is not supported. For details, refer to page 188 to page 192.

*15: Not compatible in combination with external pilot (K).

*16: Combination with push-in L-fittings (upward) is not supported.

*17: Compatible only with M4GB1 and M4GB2 solenoid positions 3 and 4.

Manifold components explanation and parts list

- T10/T10R
- T11/T11R
- T30/T30R
- T50/T50R
- T51/T51R
- T52/T52R
- T53/T53R

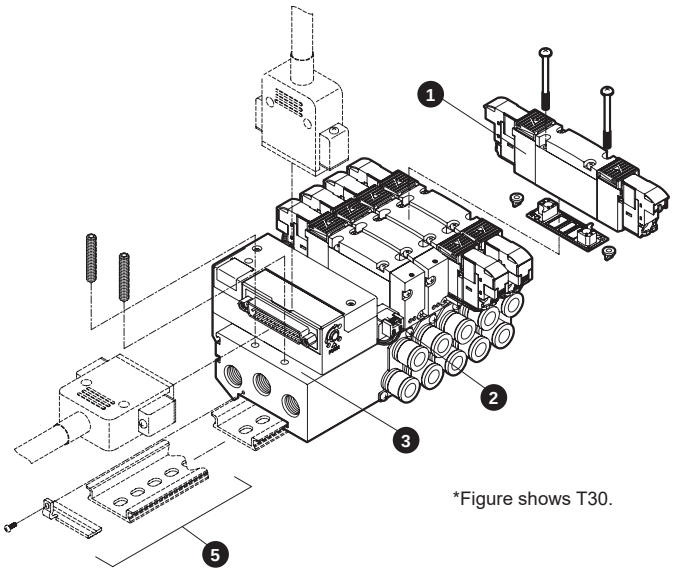

*Figure shows T30.

- T6G1

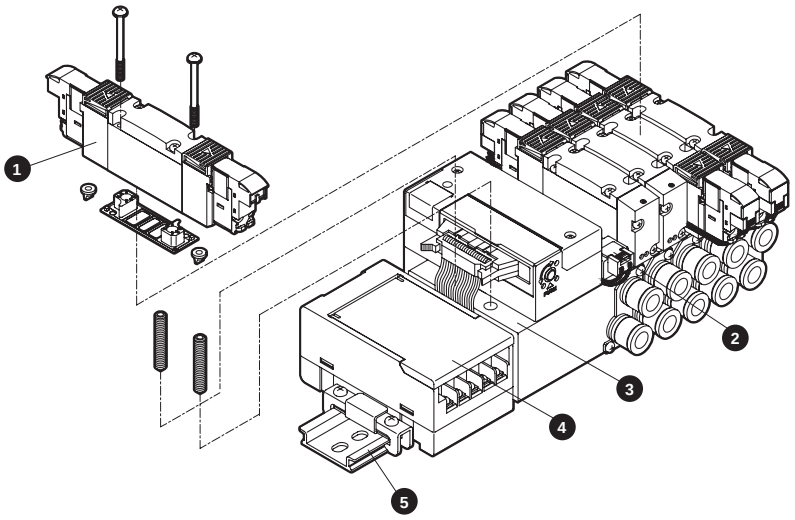

- T8*

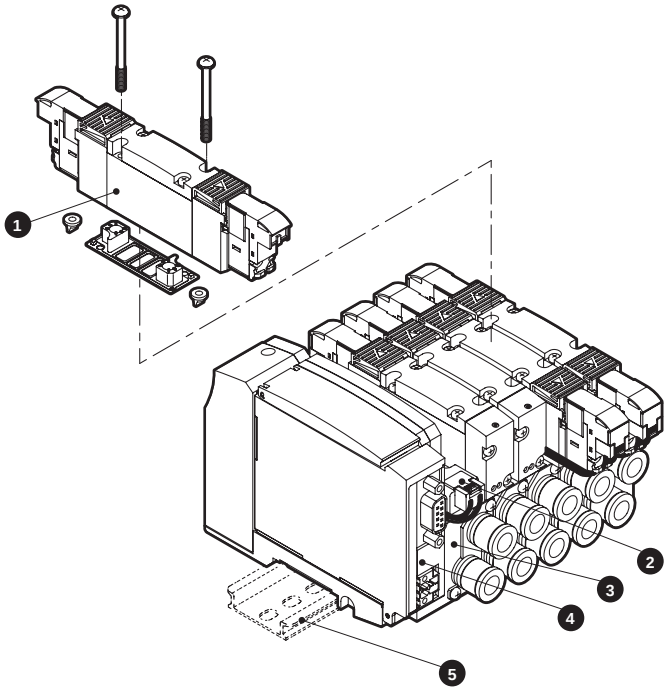

* Mount (direct, DIN rail) cannot be changed after purchase of the M4GB2-T8 and M4GB3-T8 Series.
M4GB1-T8 Series allows changes.

Main parts list

No.	Component name		Model No.	Description	Remarks
1	Discrete valve for integrated base		3/4GB□□9R-00-A2N Option - Voltage Solenoid position Series flow rate size	Discrete valve Gasket 2 mounting screws 2 PR check valves	Details on page 160
2	Masking plate	3G1/4G1	4G1R-MP	Masking plate Gasket 2 mounting screws	*4G3R-MP has two PR check valves included.
		3G2/4G2	4G2R-MP		
		3G2/4G3	4G3R-MP		
3	Manifold base assembly		M4GB □R- Port size - Reduced wiring connection - Option - Station No. Series flow rate size	Manifold base Wiring block	
4	Serial transmission device unit		4GR-OPP3- Wiring method	Discrete serial transmission device unit (connector type)	Details on page 187
			4GR-OPP7- Wiring method	Discrete serial transmission device unit (thin slot type)	
5	DIN rail kit		4GB□ R-BAA Rail length - Option D Series flow rate size		Details on page 200

Parts list

No.	Part name	Model No.
–	Coil assembly	4GR-A2N- □ -COIL- Voltage Blank: Standard A: Ozone/coolant proof S: Surgeless E: Low exoergic/energy circuit K: External pilot
–	A-connector socket assembly details on page 837	Series flow rate size 4G□R -SOCKET-ASSY-A □ □ - Row No. Blank: Left side, R: Right side A: aSOL side, B: bSOL side n: Specify position of valve to be connected

No.	Part name			Model No.
–	Cartridge push-in fitting and related parts	4G1	ø1.8 barbed	4G1R-JOINT-CF
			ø1.8 straight	4G1R-JOINT-C18
			ø4 straight	4G1R-JOINT-C4
			ø6 straight	4G1R-JOINT-C6
			ø8 straight (*1)	4G1R-JOINT-C8
			ø1.8 elbow	4G1R-JOINT-CL18, CLL18
			ø4 elbow	4G1R-JOINT-CL4, CLL4
			ø6 elbow	4G1R-JOINT-CL6, CLL6
			ø1/8" straight	4G1R-JOINT-C3N
			ø5/32" straight	4G1R-JOINT-C4N
			ø1/8" elbow (*2)	4G1R-JOINT-CL3N, CLL3N
			ø5/32" elbow (*2)	4G1R-JOINT-CL4N, CLL4N
			Plug cartridge	4G1R-JOINT-CPG
		4G2	ø4 straight	4G2R-JOINT-C4
			ø6 straight	4G2R-JOINT-C6
			ø8 straight	4G2R-JOINT-C8
			ø10 straight (*3)	4G2R-JOINT-C10
			ø6 elbow	4G2R-JOINT-CL6, CLL6
			ø8 elbow	4G2R-JOINT-CL8, CLL8
			ø1/4" straight	4G2R-JOINT-C6N
			ø5/16" straight	4G2R-JOINT-C8N
			ø1/4" elbow (*2)	4G2R-JOINT-CL6N, CLL6N
			ø5/16" elbow (*2)	4G2R-JOINT-CL8N, CLL8N
			Plug cartridge	4G2R-JOINT-CPG
		4G3	ø6 straight	4G3R-JOINT-C6
			ø8 straight	4G3R-JOINT-C8
			ø10 straight	4G3R-JOINT-C10
			ø8 elbow	4G3R-JOINT-CL8, CLL8
			ø10 elbow	4G3R-JOINT-CL10, CLL10
			ø5/16" straight	4G3R-JOINT-C8N
			ø3/8" straight	4G3R-JOINT-C10N

*1: Dedicated part for M4GB1-C8.
*2: Made to order.
*3: Common product with the 4G3 ø10 straight.

Dimensions CAD

M4GB1

*1 Figure shows T50. Refer to page 186 for detailed wiring block dimensions.
*2 The two 3-port valve integrated has the same dimensions as the double model.
* Refer to page 855 for mounting hole details.

● Reduced wiring left side type (T10/T11/T30/T50/T51/T52/T53)

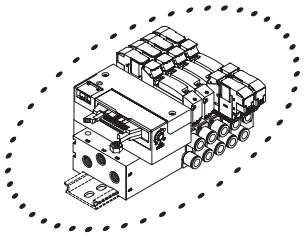

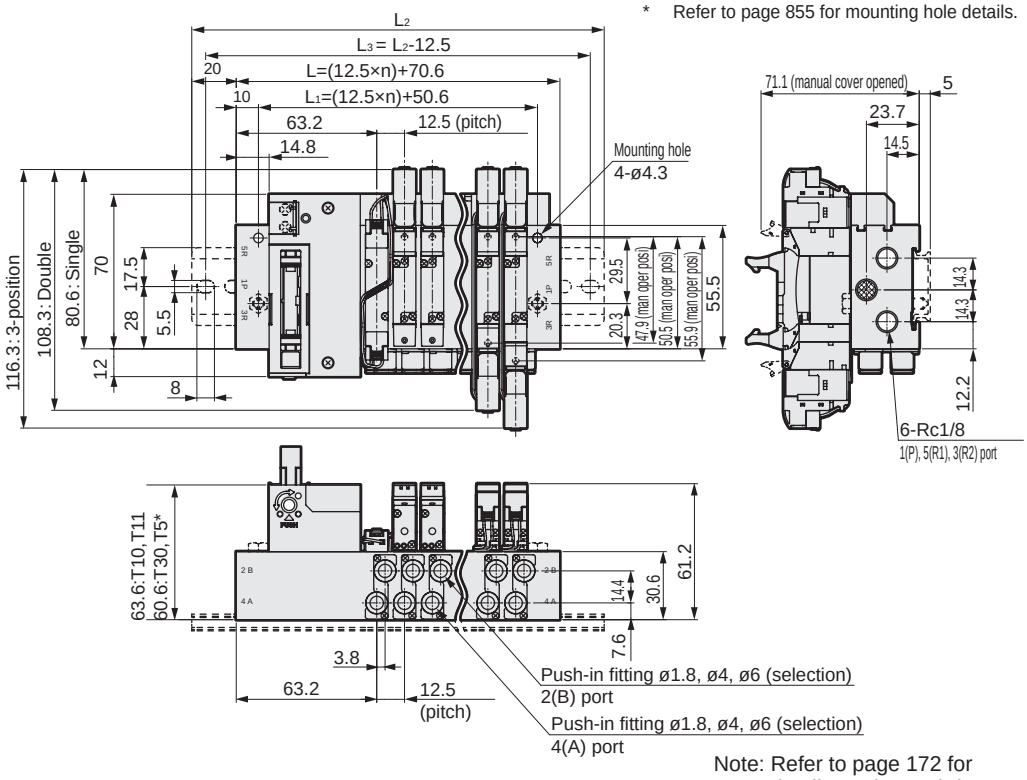

Note: Refer to page 172 for details on the push-in fitting elbow (upward) (downward).

● Reduced wiring right side type (T10R/T11R/T30R/T50R/T51R/T52R/T53R)

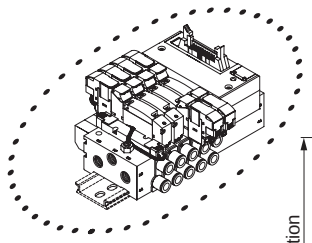

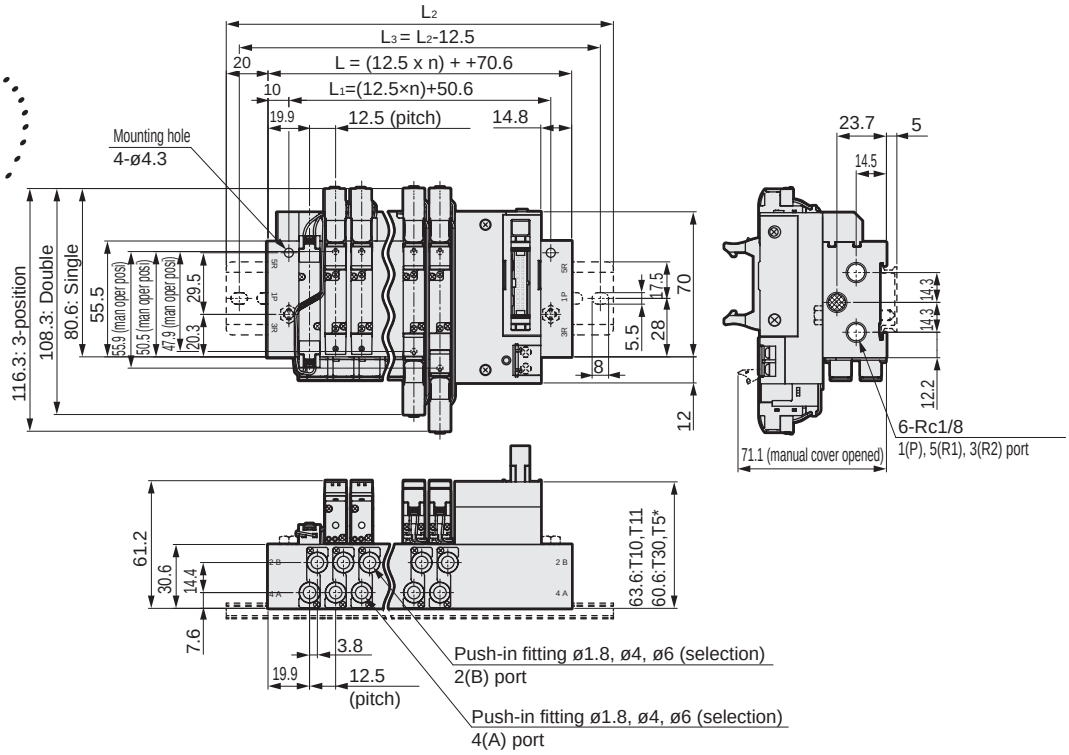

Station No.	2	3	4	5	6	7	8	9	10	11	12	13	14	15	16	17	18	19	20
L	95.6	108.1	120.6	133.1	145.6	158.1	170.6	183.1	195.6	208.1	220.6	233.1	245.6	258.1	270.6	283.1	295.6	308.1	320.6
L_1	75.6	88.1	100.6	113.1	125.6	138.1	150.6	163.1	175.6	188.1	200.6	213.1	225.6	238.1	250.6	263.1	275.6	288.1	300.6
L_2	137.5	150.0	162.5	175.0	187.5	200.0	212.5	225.0	237.5	250.0	262.5	275.0	287.5	300.0	312.5				
L_3	125.0	137.5	150.0	162.5	175.0	187.5	200.0	212.5	225.0	237.5	250.0	262.5	275.0	287.5	300.0				

Dimensions

M4GB1-C8

* Refer to page 855 for mounting hole details.

● Reduced wiring left side type (T10/T11/T30/T50/T51/T52/T53)

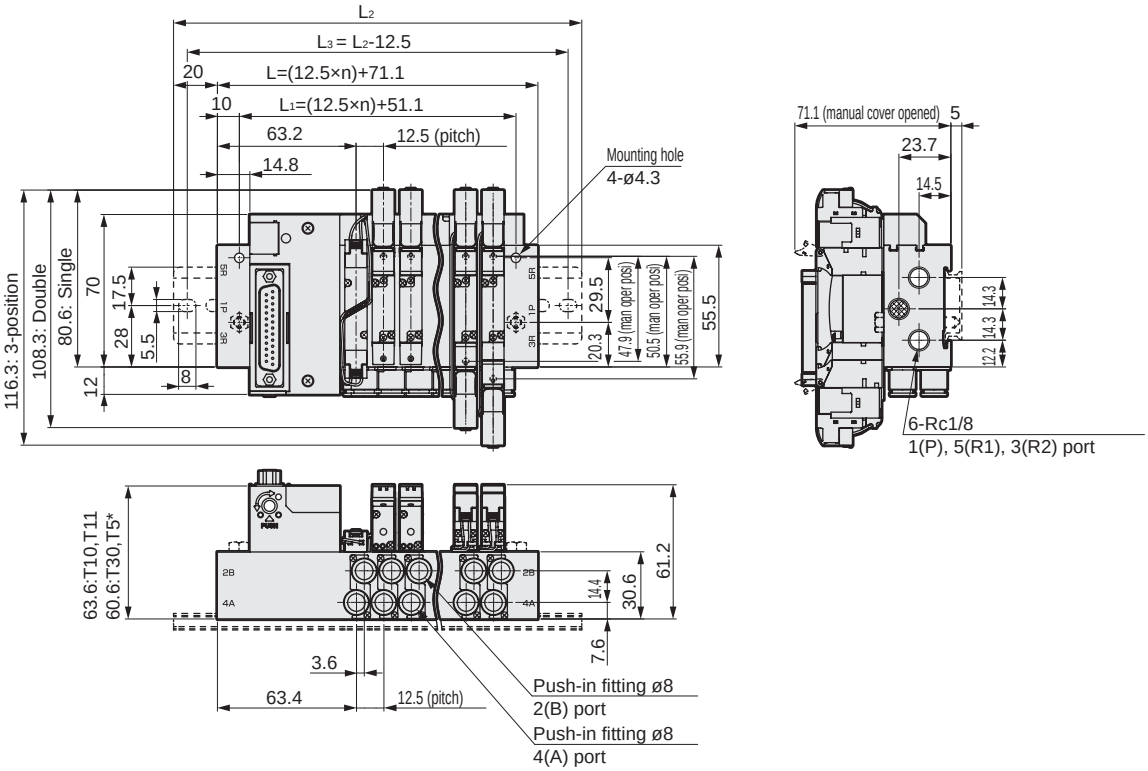

● Reduced wiring right side type (T10R/T11R/T30R/T50R/T51R/T52R/T53R)

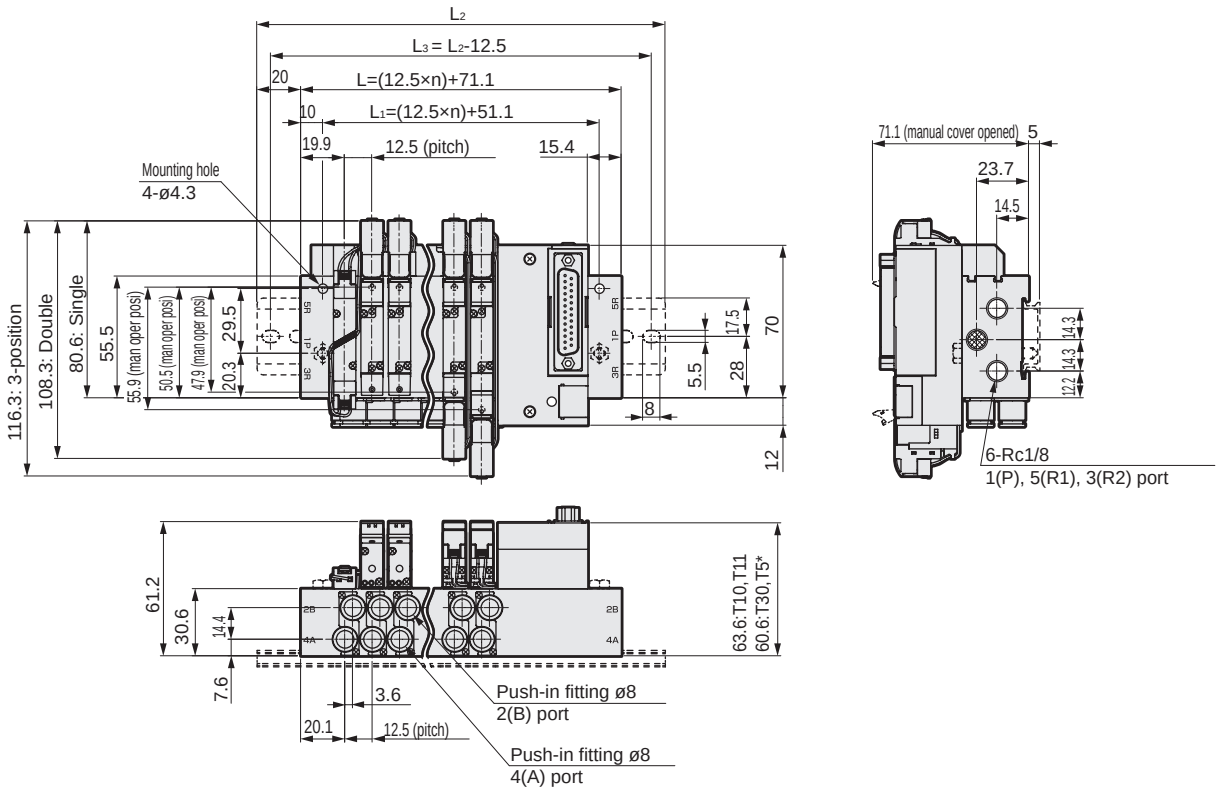

Station No.	2	3	4	5	6	7	8	9	10	11	12	13	14	15	16	17	18	19	20
L	96.1	108.6	121.1	133.6	146.1	158.6	171.1	183.6	196.1	208.6	221.1	233.6	246.1	258.6	271.1	283.6	296.1	308.6	321.1
L_1	76.1	88.6	101.1	113.6	126.1	138.6	151.1	163.6	176.1	188.6	201.1	213.6	226.1	238.6	251.1	263.6	276.1	288.6	301.1
L_2	137.5	150.0	162.5	175.0	187.5	200.0	212.5	225.0	237.5	250.0	262.5	275.0	287.5	300.0	312.5				
L_3	125.0	137.5	150.0	162.5	175.0	187.5	200.0	212.5	225.0	237.5	250.0	262.5	275.0	287.5	300.0				

Dimensions CAD

M4GB1

* Figure shows T30. Refer to page 186 for detailed wiring block dimensions.
* Refer to page 855 for mounting hole details.

● Reduced wiring left side type (T10/T11/T30/T50/T51/T52/T53)
External pilot (K)

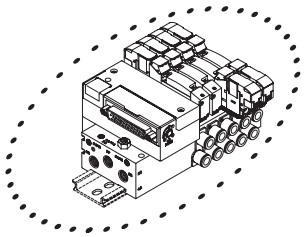

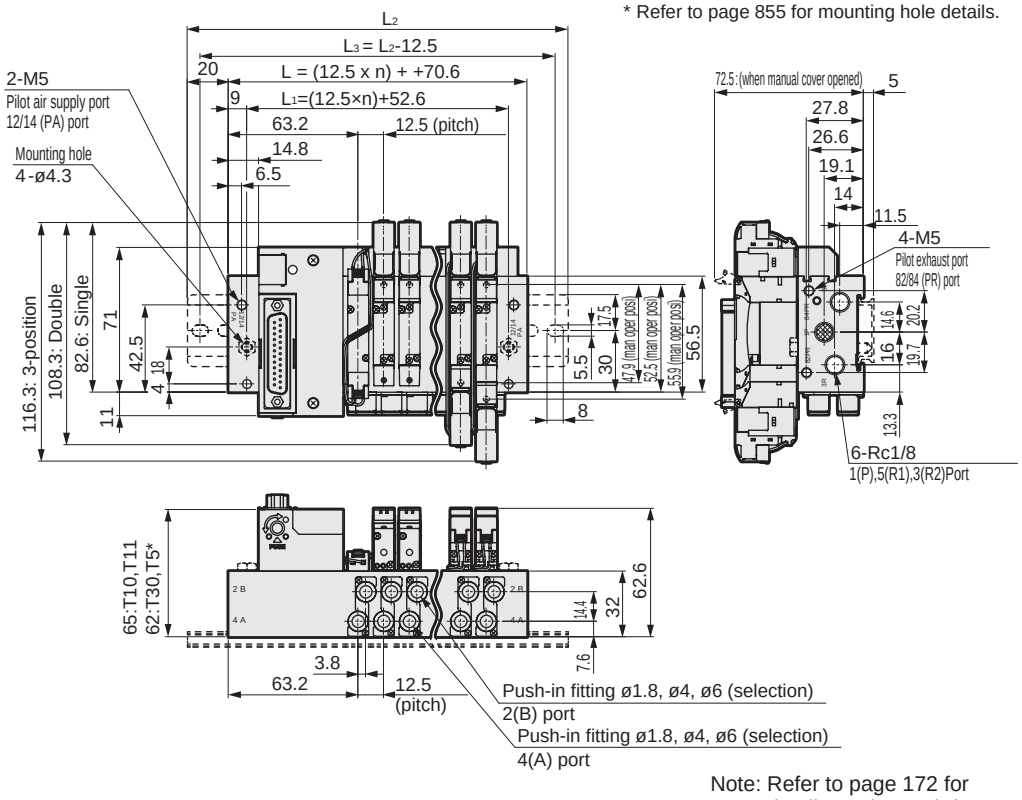

Note: Refer to page 172 for details on the push-in fitting elbow (upward) (downward).

● Reduced wiring right side type (T10R/T11R/T30R/T50R/T51R/T52R/T53R)
External pilot (K)

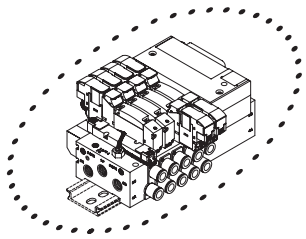

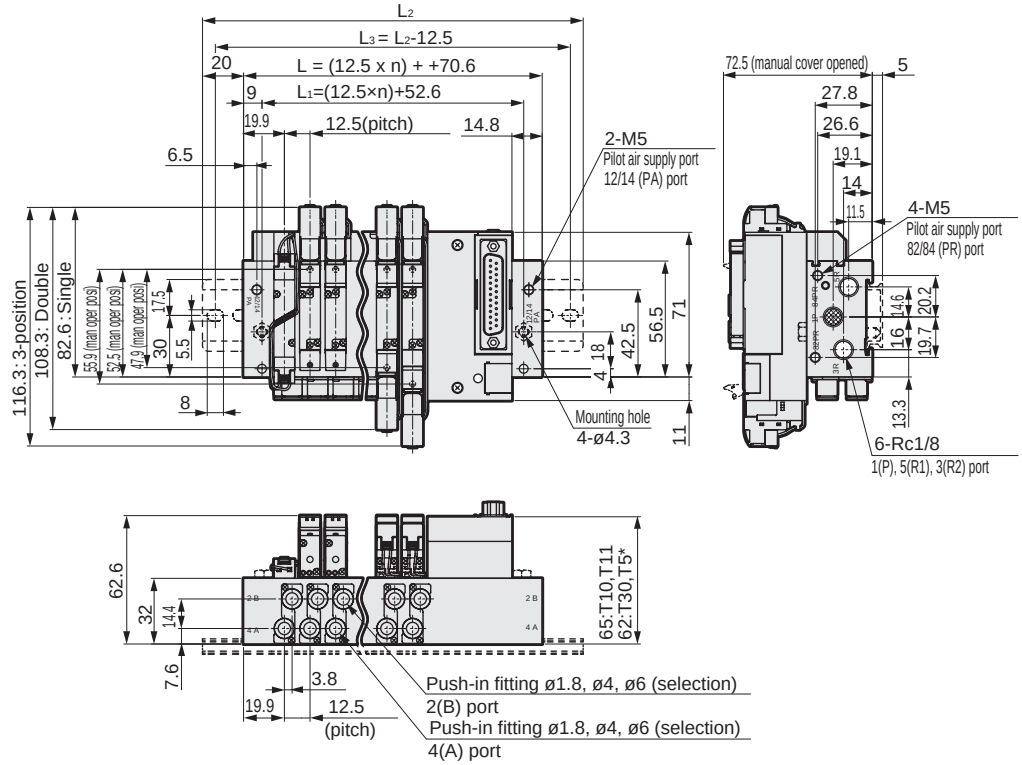

Station No.	2	3	4	5	6	7	8	9	10	11	12
L	95.6	108.1	120.6	133.1	145.6	158.1	170.6	183.1	195.6	208.1	220.6
L_1	77.6	90.1	102.6	115.1	127.6	140.1	152.6	165.1	177.6	190.1	202.6
L_2	137.5	150.0	162.5	175.0	187.5	200.0	212.5	225.0	237.5	250.0	262.5
L_3	125.0	137.5	150.0	162.5	175.0	187.5	200.0	212.5	225.0	237.5	250.0

Dimensions

M4GB1-C8

Note: Dedicated manifold base.

* Refer to page 855 for mounting hole details.

● Reduced wiring left side type (T10/T11/T30/T50/T51/T52/T53)
External pilot (K)

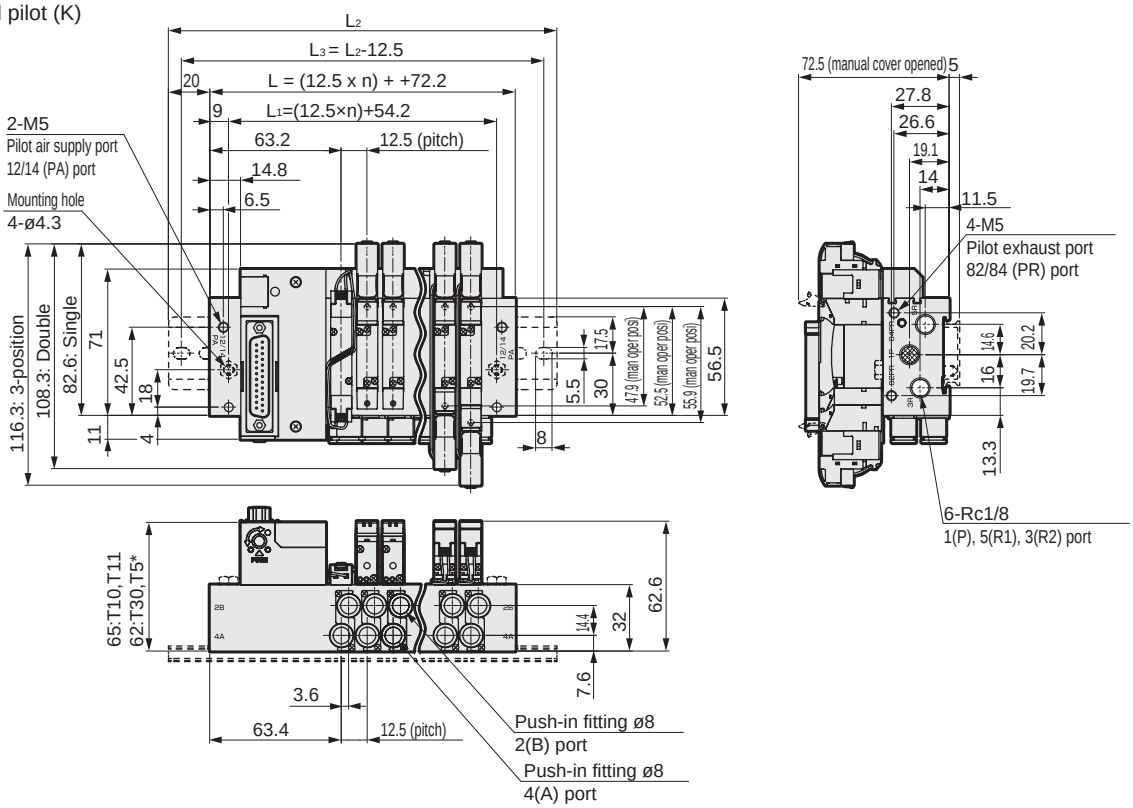

● Reduced wiring right side type (T10R/T11R/T30R/T50R/T51R/T52R/T53R)
External pilot (K)

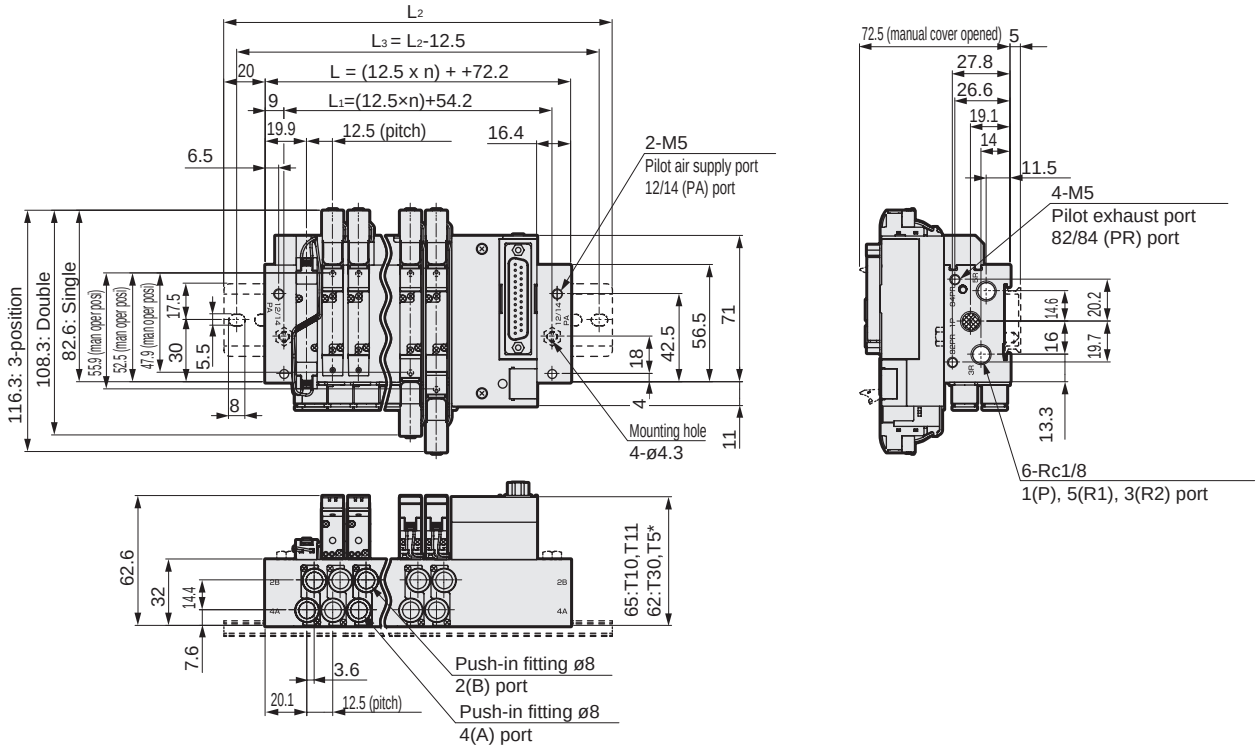

Station No.	2	3	4	5	6	7	8	9	10	11	12
L	97.2	109.7	122.2	134.7	147.2	159.7	172.2	184.7	197.2	209.7	222.2
L_1	79.2	91.7	104.2	116.7	129.2	141.7	154.2	166.7	179.2	191.7	204.2
L_2	137.5	150.0	162.5	175.0	187.5	200.0	212.5	225.0	237.5	250.0	262.5
L_3	125.0	137.5	150.0	162.5	175.0	187.5	200.0	212.5	225.0	237.5	250.0

Dimensions CAD

M4GB1

● Serial transmission (T6G1)
DIN rail mounting (D)

* The two 3-port valve integrated has the same dimensions as the double.

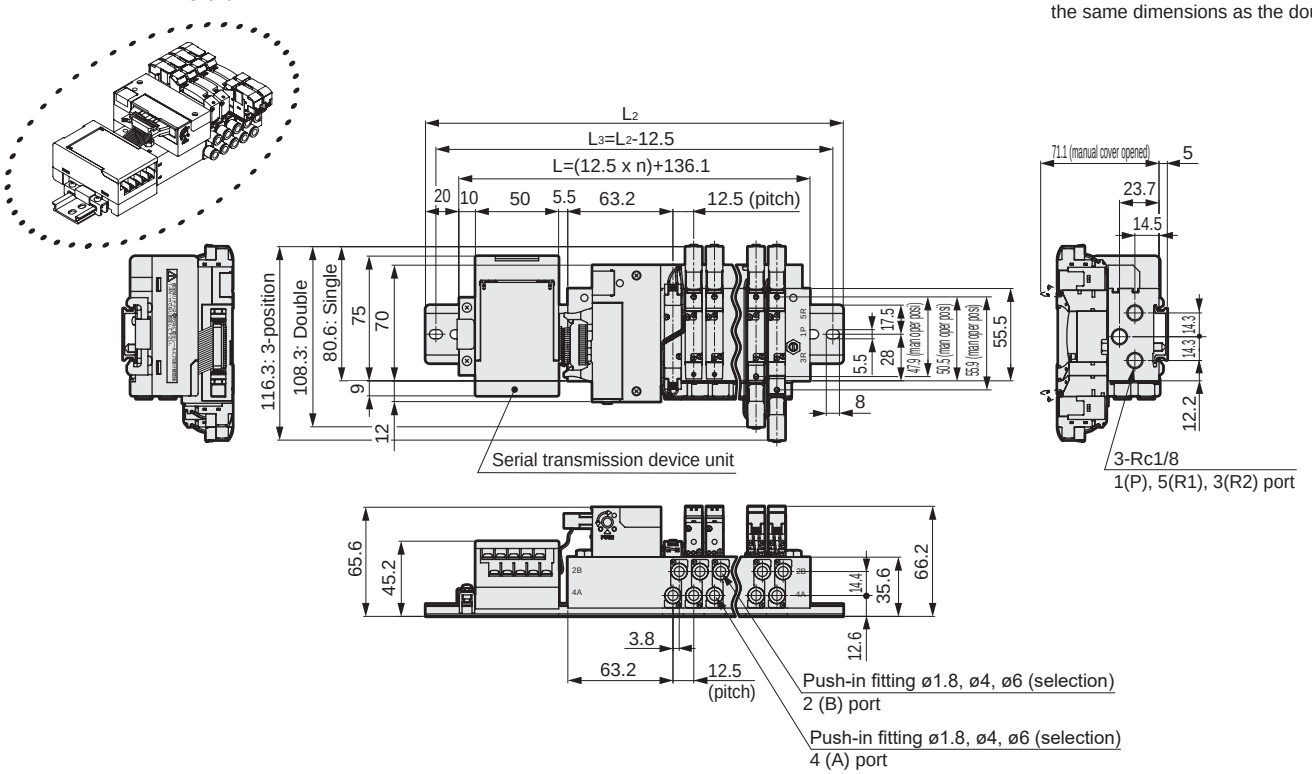

● Serial transmission (T6G1)
DIN rail mounting (D); external pilot (K)

Note: Refer to page 172 for details on the push-in fitting elbow (upward) (downward).

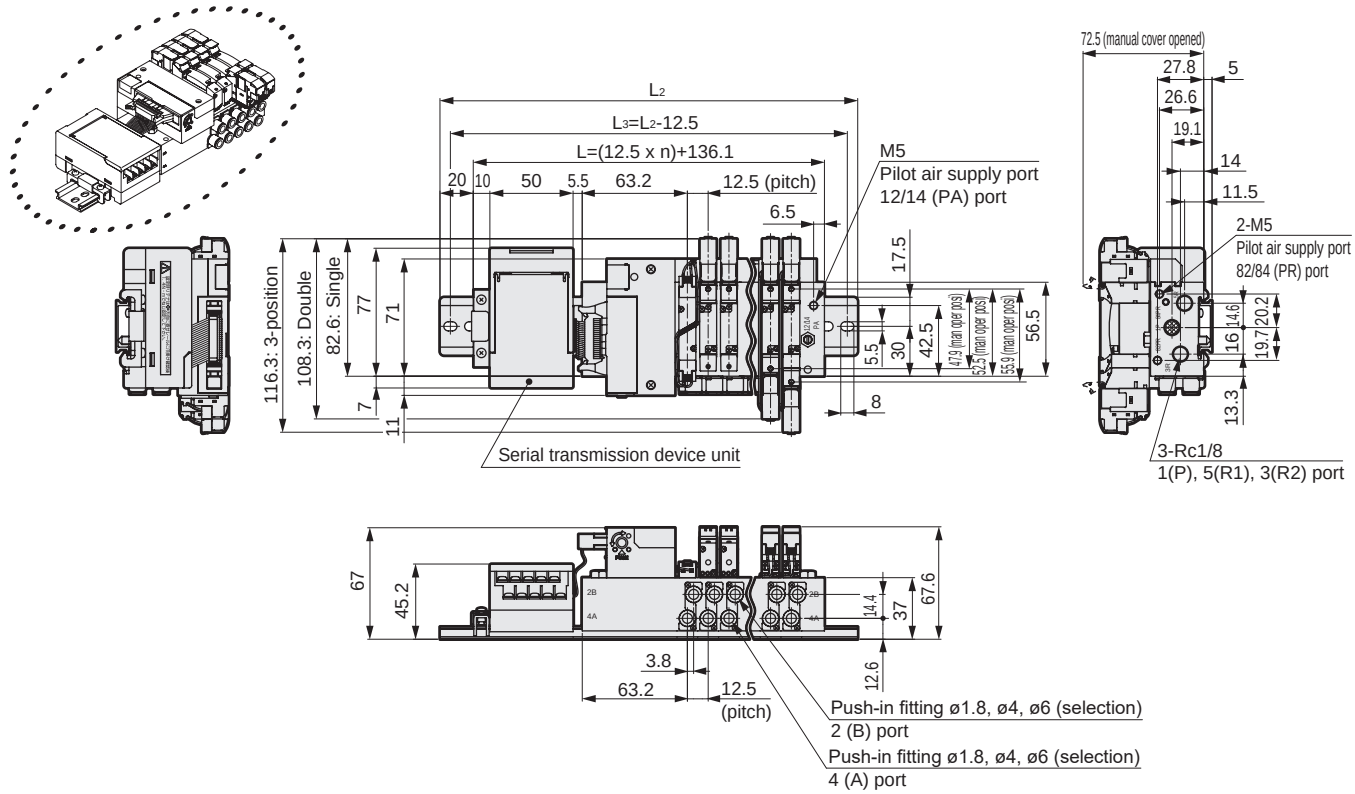

Stn No.	2	3	4	5	6	7	8	9	10	11	12	13	14	15	16
L	161.1	173.6	186.1	198.6	211.1	223.6	236.1	248.6	261.1	273.6	286.1	298.6	311.1	323.6	336.1
L_2	212.5	225.0	237.5	250.0	262.5	275.0	287.5	300.0	312.5	325.0	337.5	350.0	362.5	375.0	387.5
L_3	200.0	212.5	225.0	237.5	250.0	262.5	275.0	287.5	300.0	312.5	325.0	337.5	350.0	362.5	375.0

Dimensions

M4GB1-C8

Note: Dedicated manifold base.

● Serial transmission (T6G1)
DIN rail mounting (D)

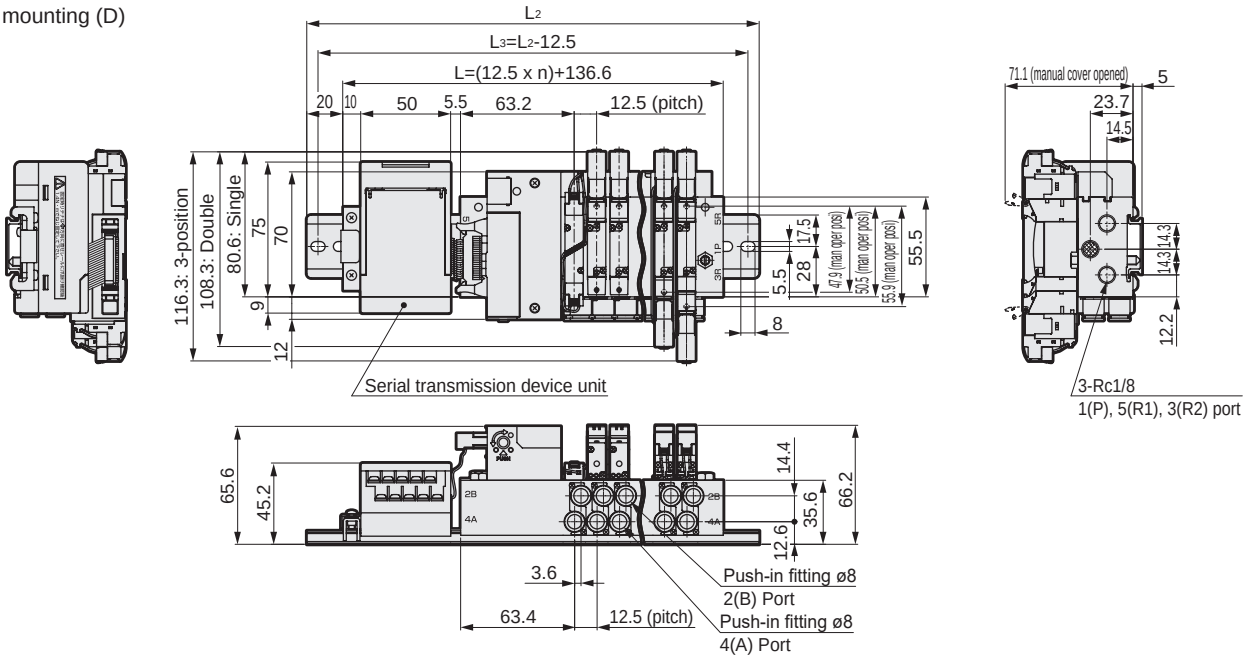

Stn No.	2	3	4	5	6	7	8	9	10	11	12	13	14	15	16
L	161.6	174.1	186.6	199.1	211.6	224.1	236.6	249.1	261.6	274.1	286.6	299.1	311.6	324.1	336.6
L_2	212.5	225.0	237.5	250.0	262.5	275.0	287.5	300.0	312.5	325.0	337.5	350.0	362.5	375.0	387.5
L_3	200.0	212.5	225.0	237.5	250.0	262.5	275.0	287.5	300.0	312.5	325.0	337.5	350.0	362.5	375.0

● Serial transmission (T6G1)
DIN rail mounting (D): external pilot (K)

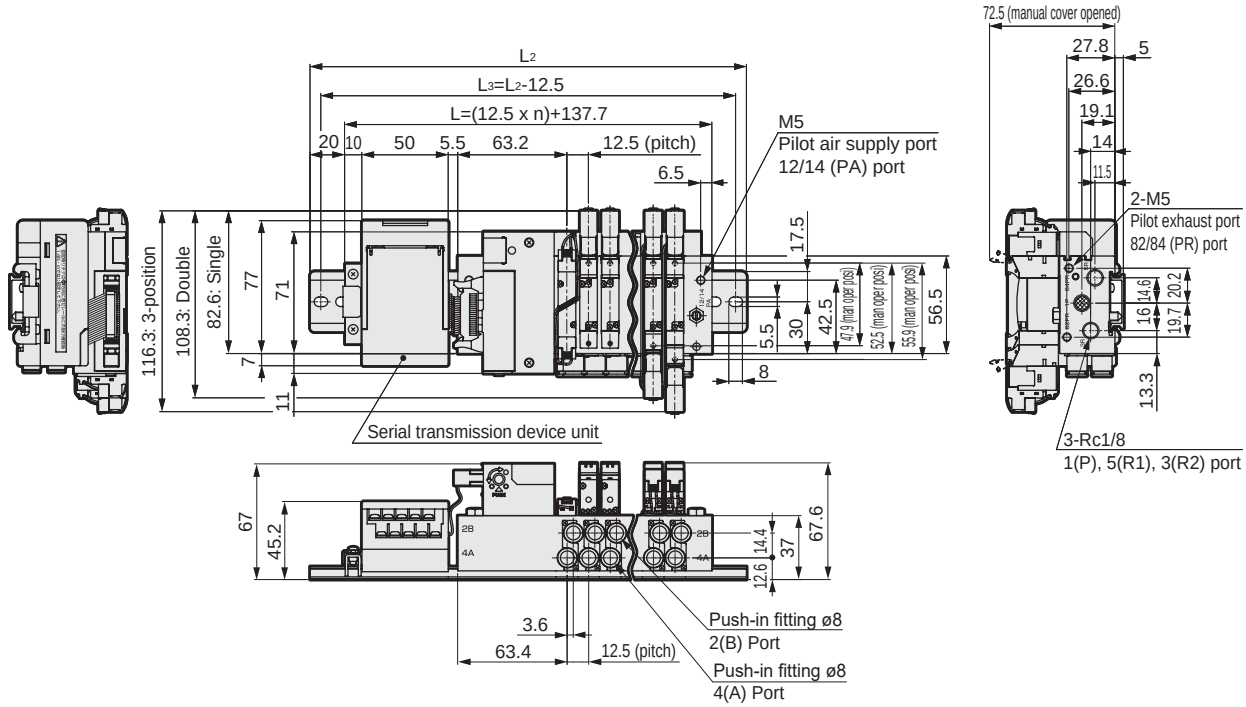

Stn No.	2	3	4	5	6	7	8	9	10	11	12
L	162.7	175.2	187.7	200.2	212.7	225.2	237.7	250.2	262.7	275.2	287.7
L_2	212.5	225.0	237.5	250.0	262.5	275.0	287.5	300.0	312.5	325.0	337.5
L_3	200.0	212.5	225.0	237.5	250.0	262.5	275.0	287.5	300.0	312.5	325.0

Dimensions

CAD

M4GB1

* Refer to page 855 for mounting hole details.

● Serial transmission (T8□)
DIN rail mount (D)

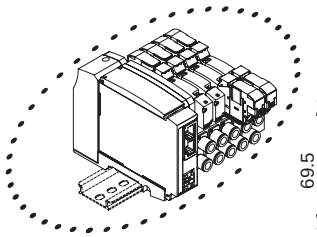

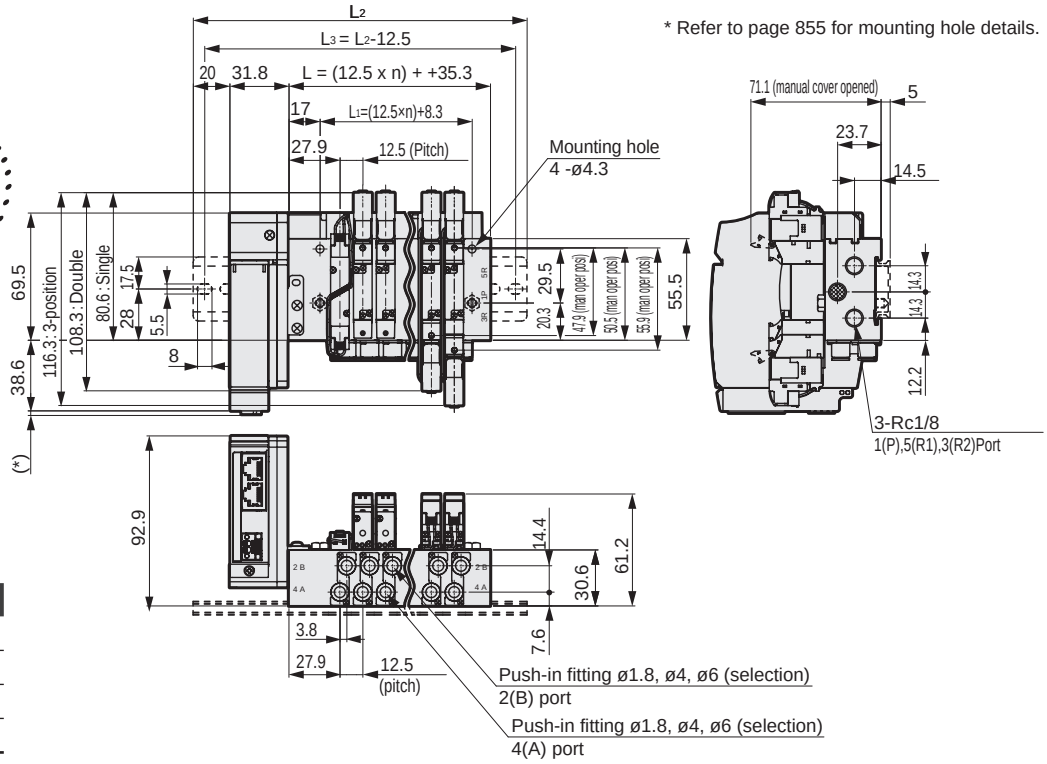

Serial transmission	* Dimensions
T8G □	1.0
T8P □	4.9
T8E □	1.5
T8D □	1.0

Station No.	2	3	4	5	6	7	8	9	10	11	12	13	14	15	16	17	18	19	20
L	60.3	72.8	85.3	97.8	110.3	122.8	135.3	147.8	160.3	172.8	185.3	197.8	210.3	222.8	235.3	247.8	260.3	272.8	285.3
L_1	33.3	45.8	58.3	70.8	83.3	95.8	108.3	120.8	133.3	145.8	158.3	170.8	183.3	195.8	208.3	220.8	233.3	245.8	258.3
L_2	137.5	150.0	162.5	175.0	187.5	200.0	212.5	225.0	237.5	250.0	262.5	275.0	287.5	300.0	312.5				
L_3	125.0	137.5	150.0	162.5	175.0	187.5	200.0	212.5	225.0	237.5	250.0	262.5	275.0	287.5	300.0				

● Serial transmission (T8□)
DIN rail mount (D); External pilot (K)

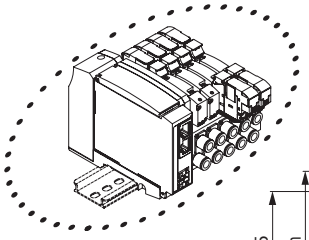

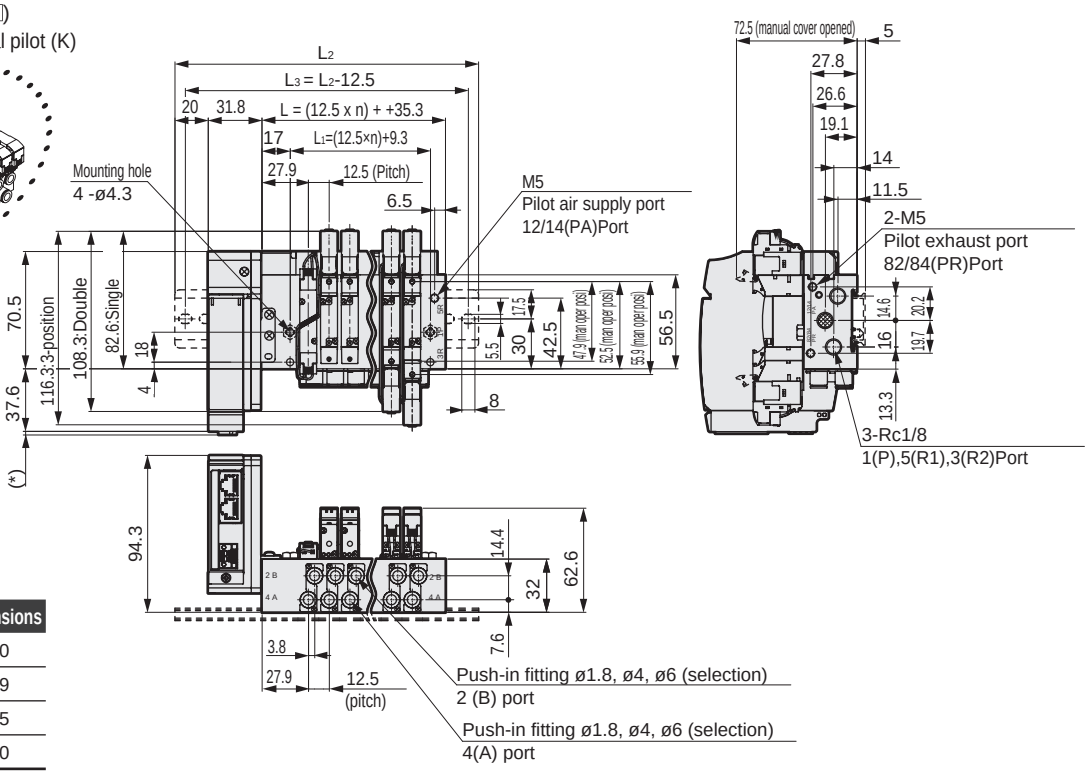

Serial transmission	* Dimensions
T8G □	1.0
T8P □	4.9
T8E □	1.5
T8D □	1.0

Station No.	2	3	4	5	6	7	8	9	10	11	12
L	60.3	72.8	85.3	97.8	110.3	122.8	135.3	147.8	160.3	172.8	185.3
L_1	34.3	46.8	59.3	71.8	84.3	96.8	109.3	121.8	134.3	146.8	159.3
L_2	137.5	150.0	162.5	175.0	187.5	200.0	212.5	225.0	237.5	250.0	262.5
L_3	125.0	137.5	150.0	162.5	175.0	187.5	200.0	212.5	225.0	237.5	250.0

Dimensions

M4GB1-C8

● Reduced wiring left side type (T8□)

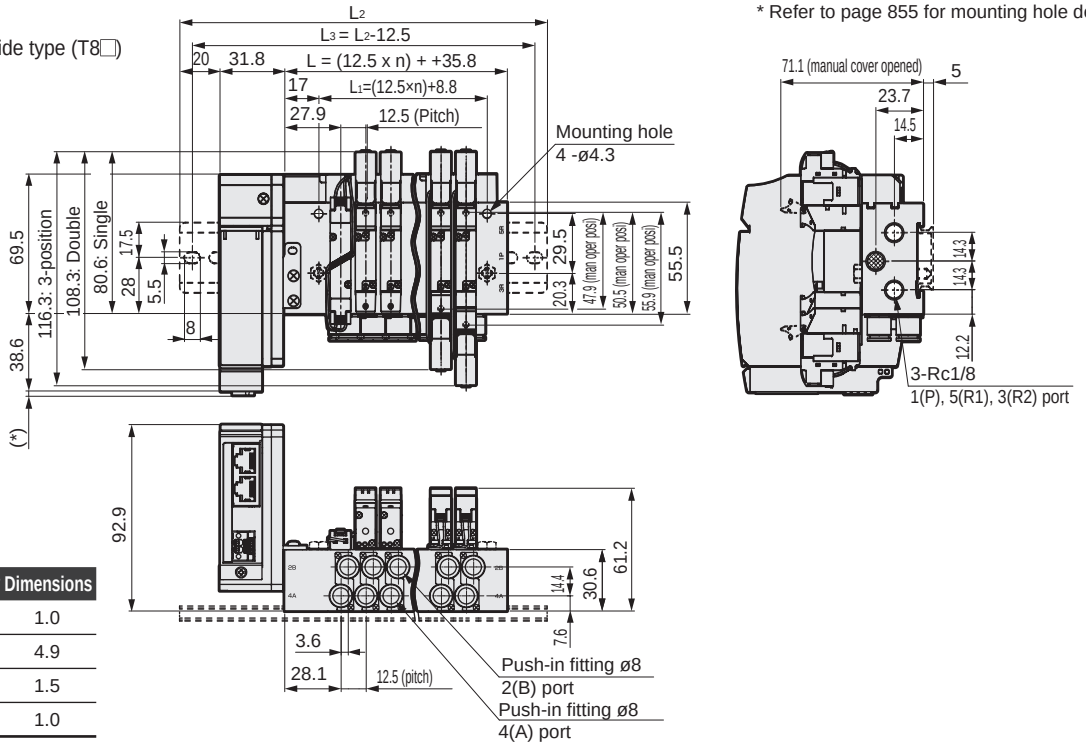

* Refer to page 855 for mounting hole details.

Serial transmission	* Dimensions
T8G □	1.0
T8P □	4.9
T8E □	1.5
T8D □	1.0

Station No.	2	3	4	5	6	7	8	9	10	11	12	13	14	15	16	17	18	19	20
L	60.8	73.3	85.8	98.3	110.8	123.3	135.8	148.3	160.8	173.3	185.8	198.3	210.8	223.3	235.8	248.3	260.8	273.3	285.8
L_1	33.8	46.3	58.8	71.3	83.8	96.3	108.8	121.3	133.8	146.3	158.8	171.3	183.8	196.3	208.3	221.3	233.8	246.3	258.8
L_2	137.5	150.0	162.5	175.0	187.5	200.0	212.5	225.0	237.5	250.0	262.5	275.0	287.5	300.0	312.5				
L_3	125.0	137.5	150.0	162.5	175.0	187.5	200.0	212.5	225.0	237.5	250.0	262.5	275.0	287.5	300.0				

● Reduced wiring left side type (T8□)
External pilot (K)

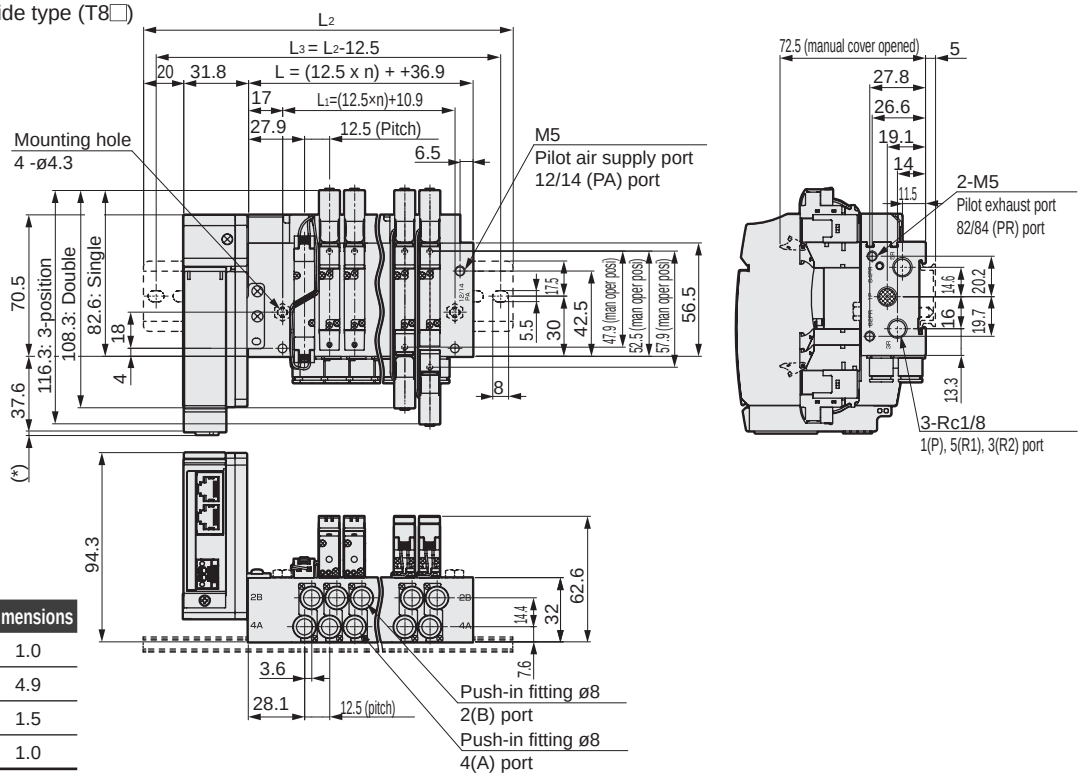

Serial transmission	* Dimensions
T8G □	1.0
T8P □	4.9
T8E □	1.5
T8D □	1.0

Station No.	2	3	4	5	6	7	8	9	10	11	12
L	61.9	74.4	86.9	99.4	111.9	124.4	136.9	149.4	161.9	174.4	186.9
L_1	35.9	48.4	60.9	73.4	85.9	98.4	110.9	123.4	135.9	148.4	160.9
L_2	137.5	150.0	162.5	175.0	187.5	200.0	212.5	225.0	237.5	250.0	262.5
L_3	125.0	137.5	150.0	162.5	175.0	187.5	200.0	212.5	225.0	237.5	250.0

Dimensions

M4GB1

● Fitting straight

● ø1.8(CF) ● ø1.8(C18) ● ø4(C4) ● ø6(C6) ● ø8(C8)

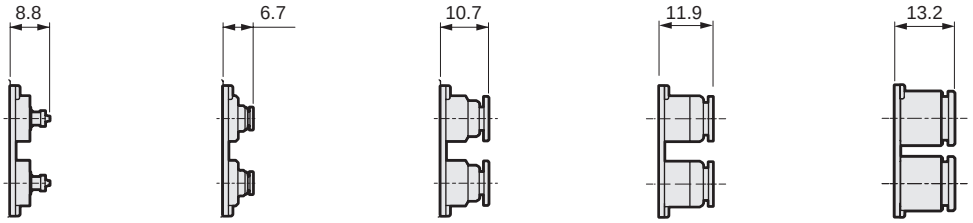

● Fitting straight, single plug

● ø1.8 (CFNC) ● ø1.8 (C18NC) ● ø4 (C4NC) ● ø6 (C6NC) ● ø8 (C8NC) ● ø1.8 (CFNO) ● ø1.8 (C18NO) ● ø4 (C4NO) ● ø6 (C6NO) ● ø8 (C8NO)

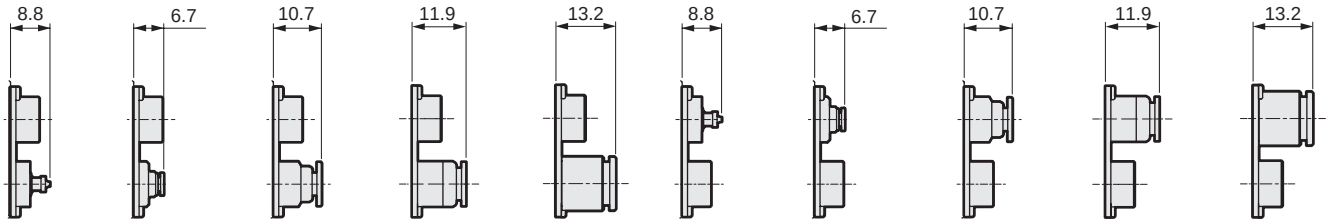

● L fitting (upward)

● ø1.8(CL18) ● ø4(CL4) ● ø6(CL6)

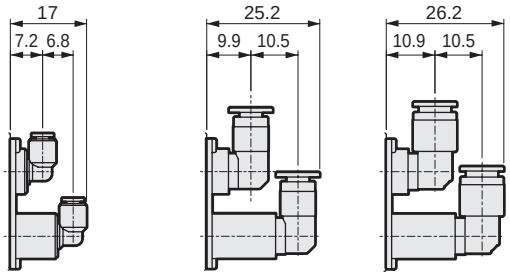

● L Fitting (downward)

● ø1.8(CD18) ● ø4(CD4) ● ø6(CD6)

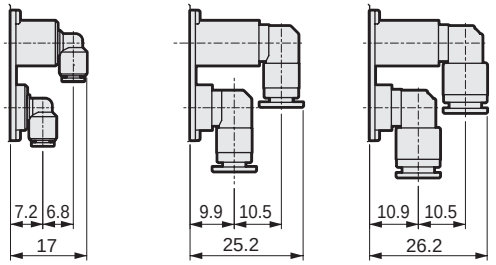

● L Fitting (upward), single plug

● ø1.8(CL18NC) ● ø4(CL4NC) ● ø6(CL6NC) ● ø1.8(CL18NO) ● ø4(CL4NO) ● ø6(CL6NO)

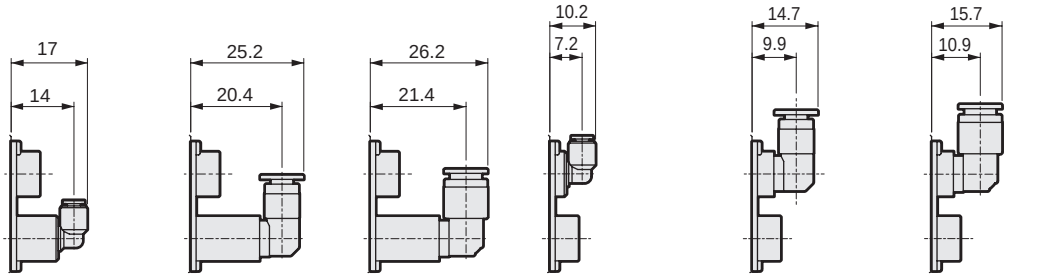

● Push-in L Fitting (downward), single plug

ø1.8(CD18NC) ● ø4(CD4NC) ● ø6(CD6NC) ● ø1.8(CD18NO) ● ø4(CD4NO) ● ø6(CD6NO)

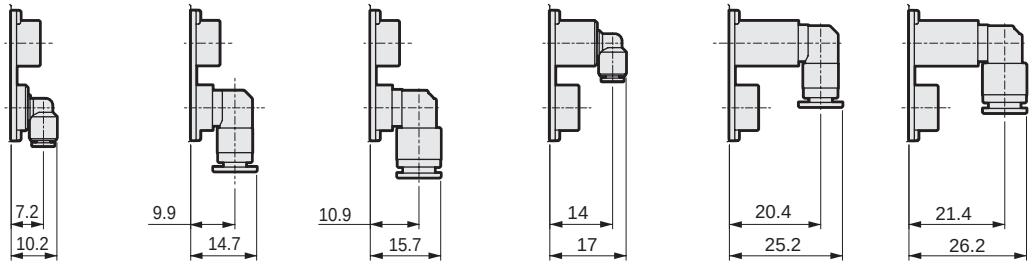

Dimensions

Fitting straight

● ø1/8" (C3N)

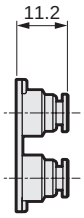

● ø5/32" (C4N)

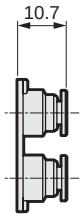

● Fitting straight, single plug

● ø1/8" (C3NCN)

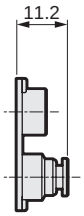

● ø5/32" (C4NCN)

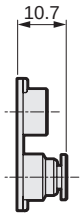

● ø1/8" (C3NON)

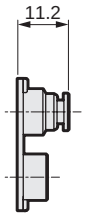

● ø5/32" (C4NON)

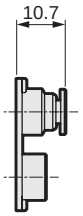

● L fitting (upward)

● ø1/8" (CL3N)

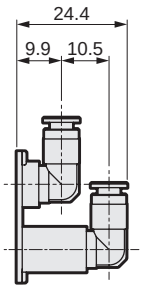

● ø5/32" (CL4N)

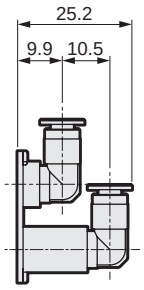

● ø1/8" (CD3N)

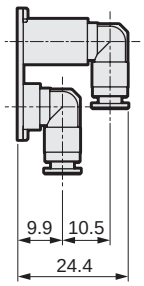

● ø5/32" (CD4N)

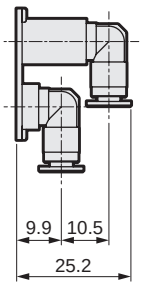

● L fitting (upward), single plug

● ø1/8" (CL3NCN)

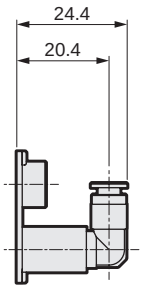

● ø5/32" (CL4NCN)

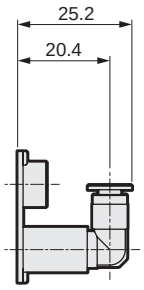

● ø1/8" (CL3NON)

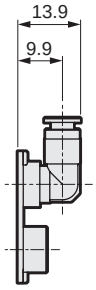

● ø5/32" (CL4NON)

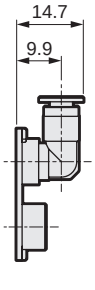

● Push-in L fitting (downward), single plug

● ø1/8" (CD3NCN)

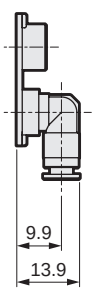

● ø5/32" (CD4NCN)

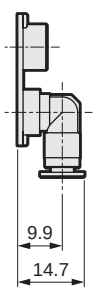

● ø1/8" (CD3NON)

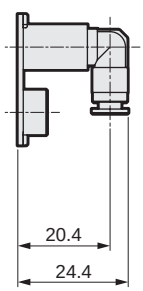

● ø5/32" (CD4NON)

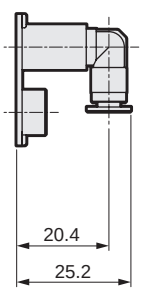

Dimensions CAD

M4GB2

*1 Figure shows T10. Refer to page 186 for detailed wiring block dimensions.
*2 The two 3-port valve integrated has the same dimensions as the double model.
* Refer to page 854 for mounting hole details.

● Reduced wiring left side type (T10/T11/T30/T50/T51/T52/T53)

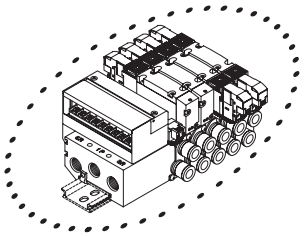

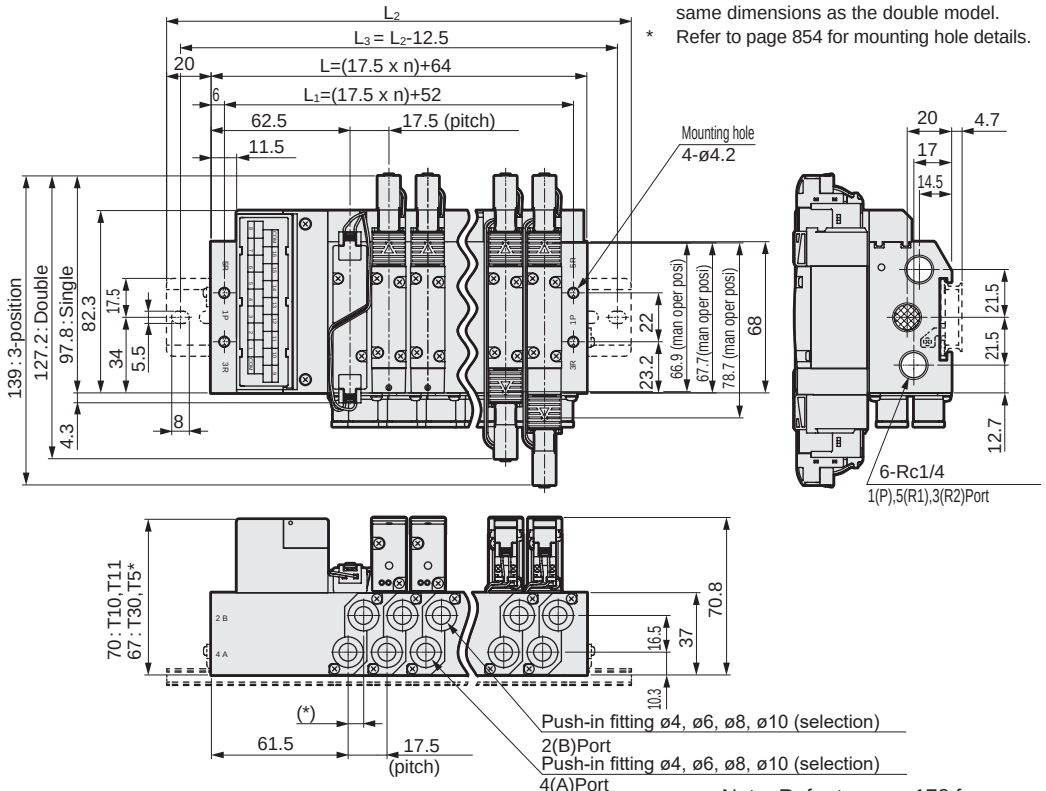

A/B port size	* Dimensions
ø4, ø6, ø8	7
ø10	8.1

Note: Refer to page 178 for details on the push-in fitting elbow (upward) (downward).

● Reduced wiring right side type (T10R/T11R/T30R/T50R/T51R/T52R/T53R)

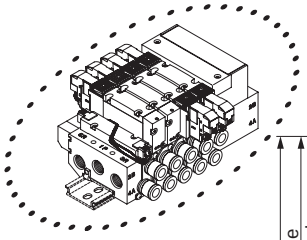

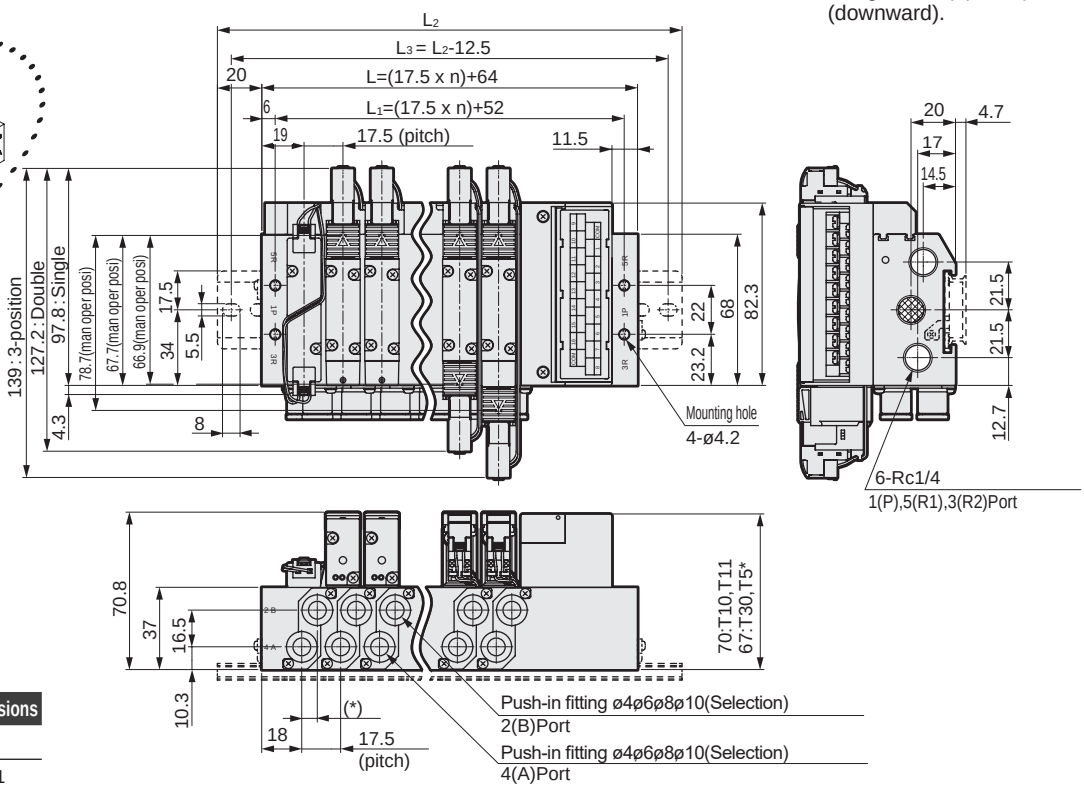

A/B port size	* Dimensions
ø4, ø6, ø8	7
ø10	8.1

Station No.	2	3	4	5	6	7	8	9	10	11	12	13	14	15	16	17	18	19	20
L	99.0	116.5	134.0	151.5	169.0	186.5	204.0	221.5	239.0	256.5	274.0	291.5	309.0	326.5	344.0	361.5	379.0	396.5	414.0
L_1	87.0	104.5	122.0	139.5	157.0	174.5	192.0	209.5	227.0	244.5	262.0	279.5	297.0	314.5	332.0	349.5	367.0	384.5	402.0
L_2	150.0	162.5	175.0	200.0	212.5	237.5	250.0	262.5	287.5	300.0	325.0	337.5	350.0	375.0	387.5				
L_3	137.5	150.0	162.5	187.5	200.0	225.0	237.5	250.0	275.0	287.5	312.5	325.0	337.5	362.5	375.0				

Dimensions

M4GB2

* Figure shows T30. Refer to page 186 for detailed wiring block dimensions.
* Refer to page 854 for mounting hole details.

● Reduced wiring left side type (T10/T11/T30/T50/T51/T52/T53)
External pilot (K)

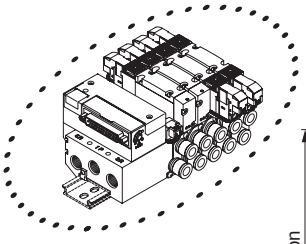

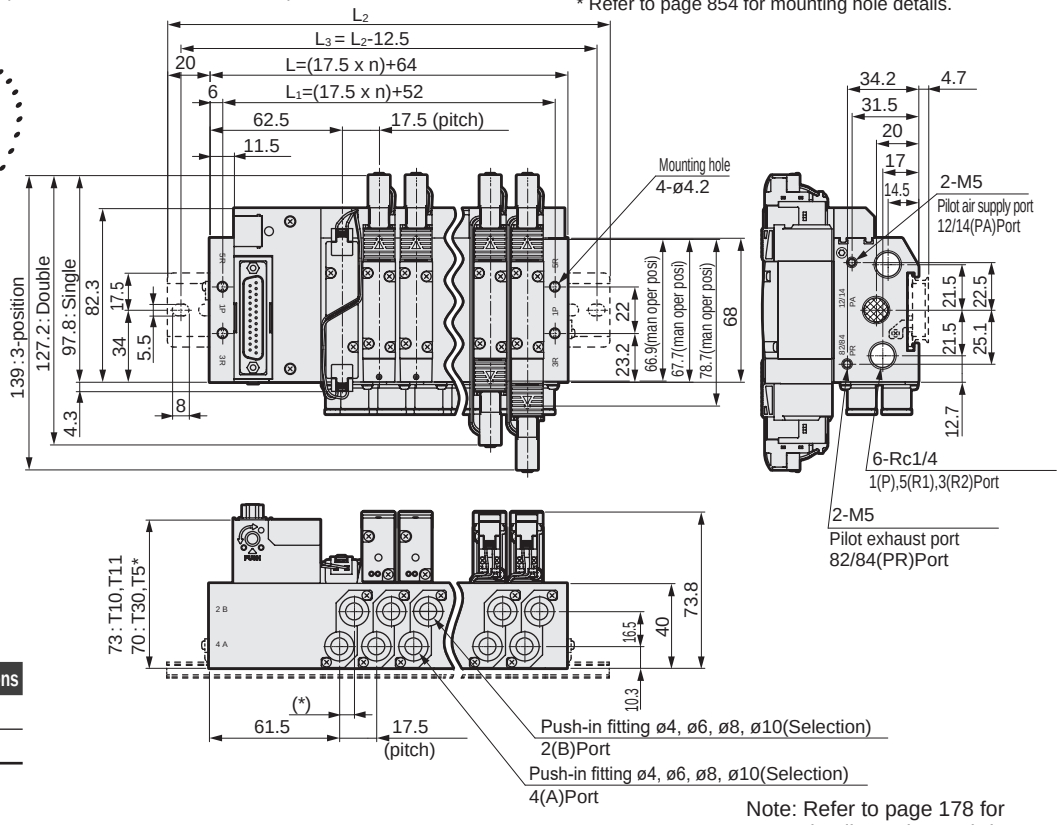

A/B port size	* Dimensions
ø4, ø6, ø8	7
ø10	8.1

● Reduced wiring right side type (T10R/T11R/T30R/T50R/T51R/T52R/T53R)
External pilot (K)

Note: Refer to page 178 for details on the push-in fitting elbow (upward) (downward).

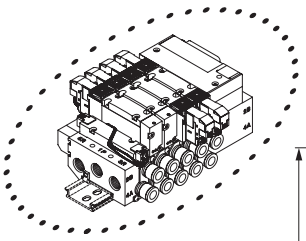

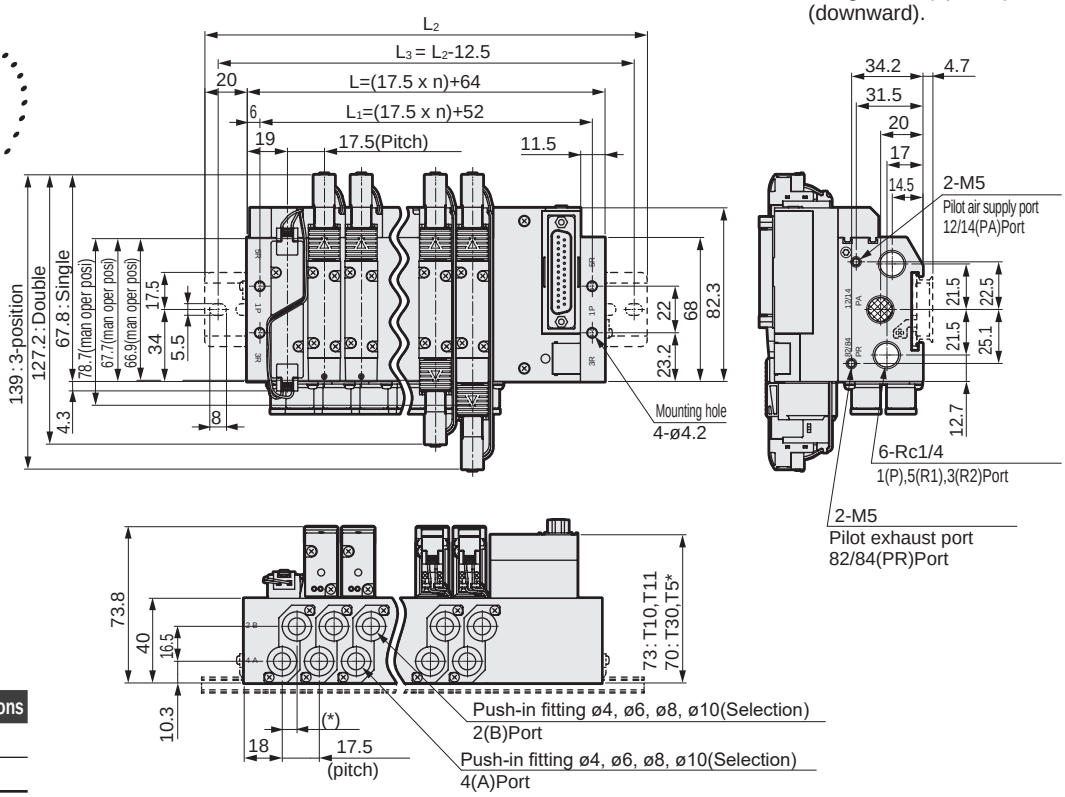

A/B port size	* Dimensions
ø4, ø6, ø8	7
ø10	8.1

Station No.	2	3	4	5	6	7	8	9	10	11	12	13	14	15	16	17	18	19	20
L	99.0	116.5	134.0	151.5	169.0	186.5	204.0	221.5	239.0	256.5	274.0	291.5	309.0	326.5	344.0	361.5	379.0	396.5	414.0
L_1	87.0	104.5	122.0	139.5	157.0	174.5	192.0	209.5	227.0	244.5	262.0	279.5	297.0	314.5	332.0	349.5	367.0	384.5	402.0
L_2	150.0	162.5	175.0	200.0	212.5	237.5	250.0	262.5	287.5	300.0	325.0	337.5	350.0	375.0	387.5				
L_3	137.5	150.0	162.5	187.5	200.0	225.0	237.5	250.0	275.0	287.5	312.5	325.0	337.5	362.5	375.0				

Dimensions CAD

M4GB2

● Serial transmission (T6G1)
DIN rail mounting (D)

* The two 3-port valve integrated has the same dimensions as the double.

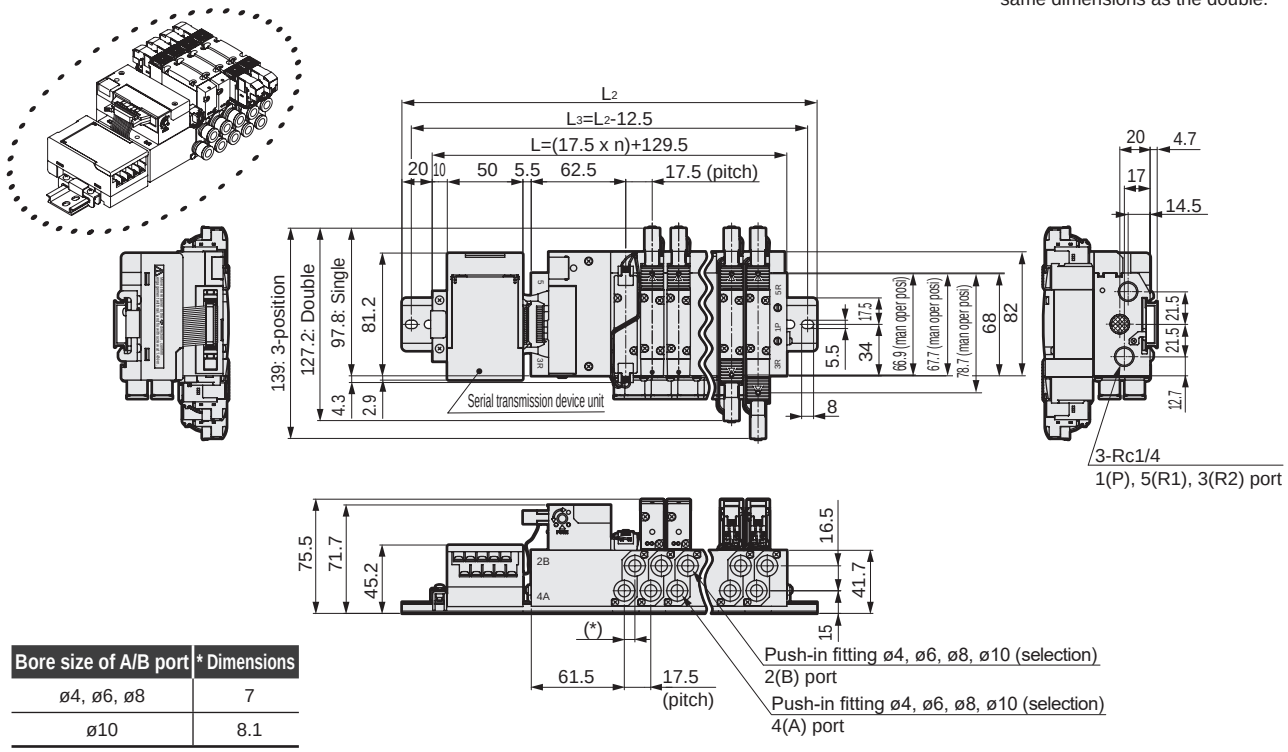

Bore size of A/B port	* Dimensions
ø4, ø6, ø8	7
ø10	8.1

Note: Refer to page 178 for details on the push-in fitting elbow (upward) (downward).

● Serial transmission (T6G1)
DIN rail mounting (D); external pilot (K)

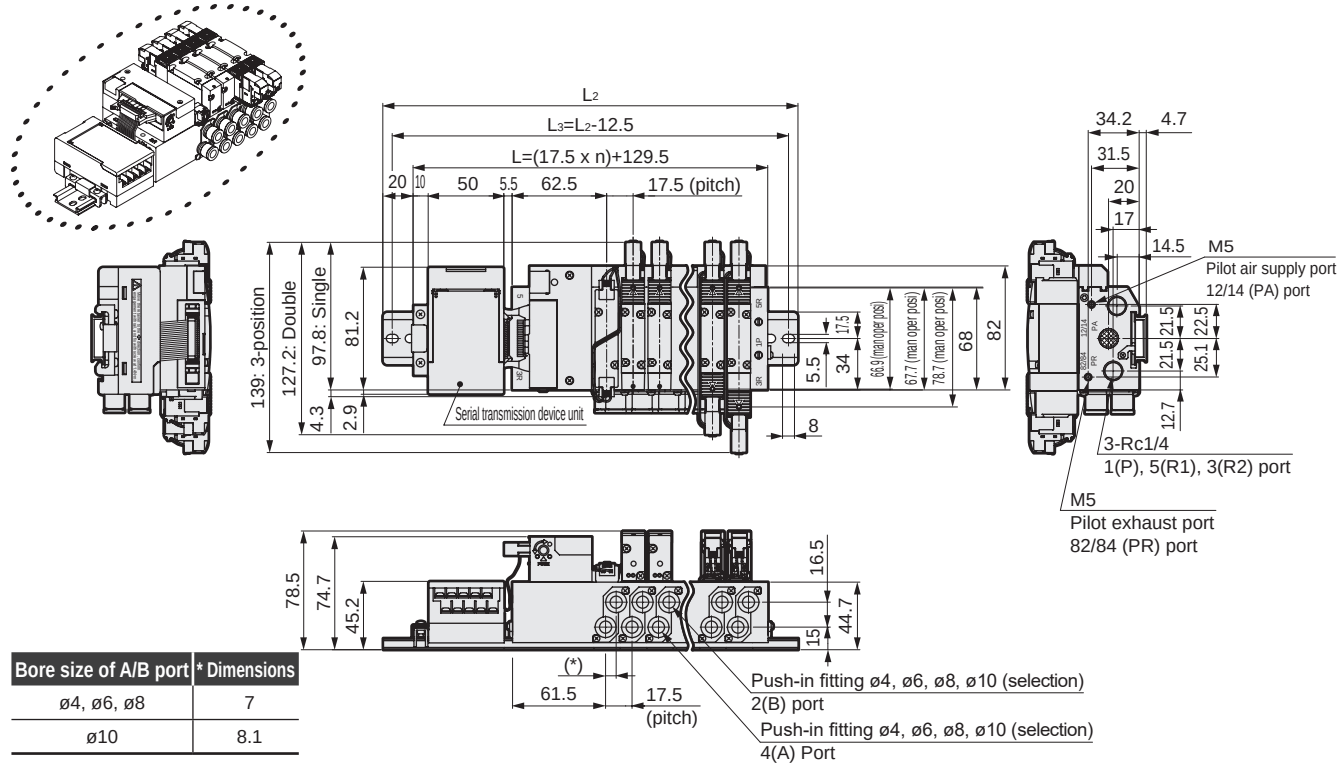

Bore size of A/B port	* Dimensions
ø4, ø6, ø8	7
ø10	8.1

Stn No.	2	3	4	5	6	7	8	9	10	11	12	13	14	15	16
L	164.5	182.0	199.5	217.0	234.5	252.0	269.5	287.0	304.5	322.0	339.5	357.0	374.5	392.0	409.5
L_2	212.5	225.0	250.0	262.5	275.0	300.0	312.5	337.5	350.0	362.5	387.5	400.0	425.0	437.5	450.0
L_3	200.0	212.5	237.5	250.0	262.5	287.5	300.0	325.0	337.5	350.0	375.0	387.5	412.5	425.0	437.5

Dimensions

M4GB2

* Refer to page 854 for mounting hole details.

● Serial transmission (T8*) DIN rail mounting (D)

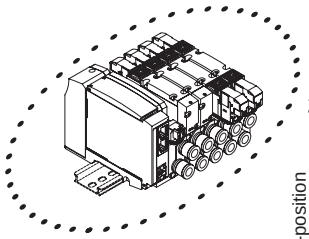

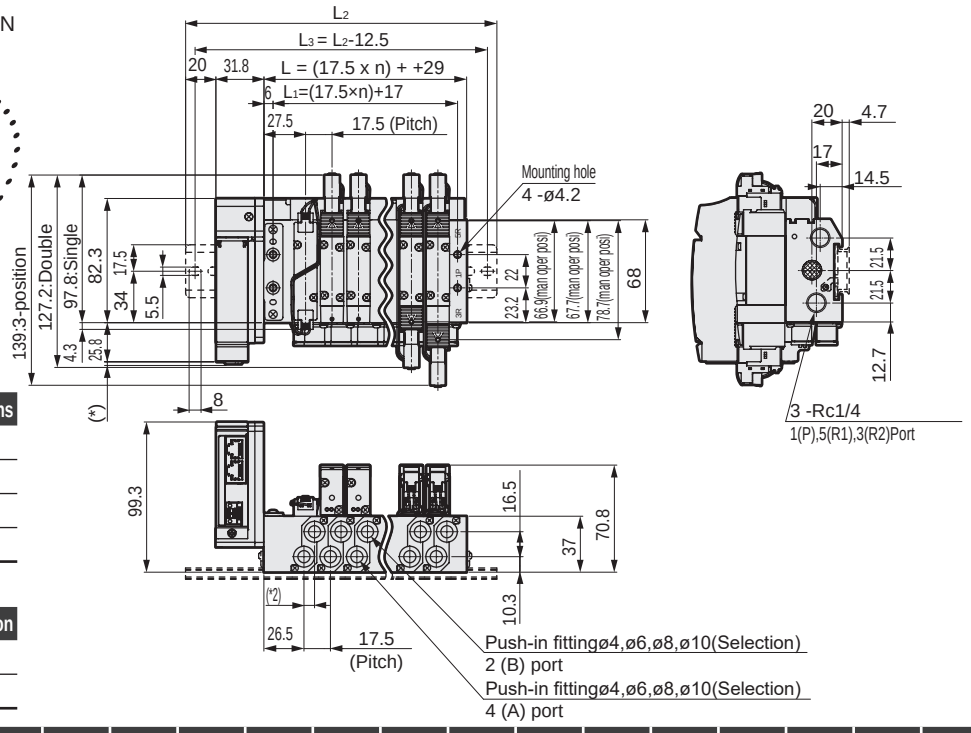

Serial transmission	* Dimensions
T8G □	1.0
T8P □	4.9
T8E □	1.5
T8D □	1.0

*2

A/B port size	*2 dimension
ø4, ø6, ø8	7
ø10	8.1

Station No.	2	3	4	5	6	7	8	9	10	11	12	13	14	15	16	17	18	19	20
L	64.0	81.5	99.0	116.5	134.0	151.5	169.0	186.5	204.0	221.5	239.0	256.5	274.0	291.5	309.0	326.5	344.0	361.5	379.0
L_1	52.0	69.5	87.0	104.5	122.0	139.5	157.0	174.5	192.0	209.5	227.0	244.5	262.0	279.5	297.0	314.5	332.0	349.5	367.0
L_2	137.5	162.5	175.0	200.0	212.5	225.0	250.0	262.5	287.5	300.0	312.5	337.5	350.0	375.0	387.5				
L_3	125.0	150.0	162.5	187.5	200.0	212.5	237.5	250.0	275.0	287.5	300.0	325.0	337.5	362.5	375.0				

● Serial transmission (T8*) DIN rail mounting (D); External pilot (K)

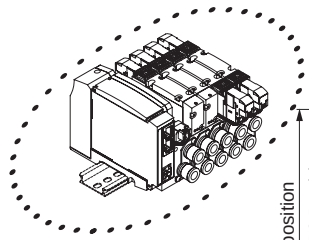

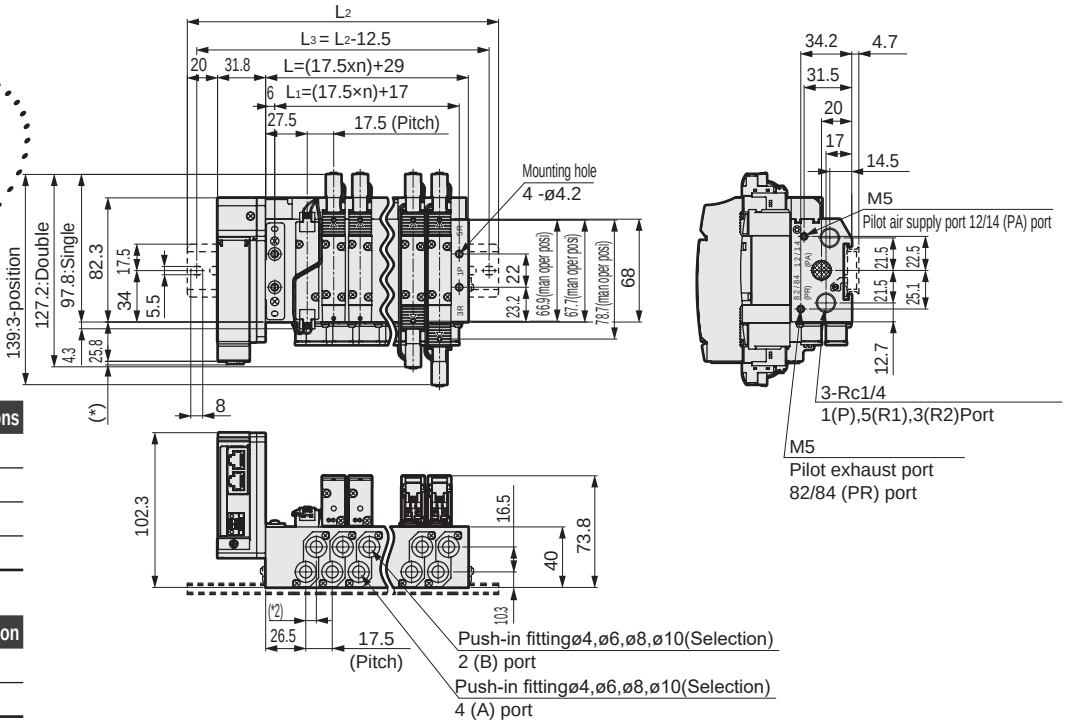

Serial transmission	* Dimensions
T8G □	1.0
T8P □	4.9
T8E □	1.5
T8D □	1.0

*2

A/B port size	*2 dimension
ø4, ø6, ø8	7
ø10	8.1

Station No.	2	3	4	5	6	7	8	9	10	11	12	13	14	15	16	17	18	19	20
L	64.0	81.5	99.0	116.5	134.0	151.5	169.0	186.5	204.0	221.5	239.0	256.5	274.0	291.5	309.0	326.5	344.0	361.5	379.0
L_1	52.0	69.5	87.0	104.5	122.0	139.5	157.0	174.5	192.0	209.5	227.0	244.5	262.0	279.5	297.0	314.5	332.0	349.5	367.0
L_2	137.5	162.5	175.0	200.0	212.5	225.0	250.0	262.5	287.5	300.0	312.5	337.5	350.0	375.0	387.5				
L_3	125.0	150.0	162.5	187.5	200.0	212.5	237.5	250.0	275.0	287.5	300.0	325.0	337.5	362.5	375.0				

Dimensions

M4GB2

● Fitting straight

● ø4(C4) ● ø6(C6) ● ø8(C8) ● ø10(C10)

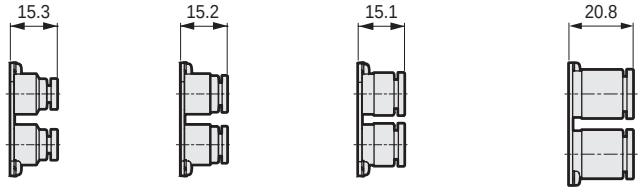

Fitting straight, single plug

● ø4 (C4NC) ● ø6 (C6NC) ● ø8 (C8NC) ● ø10 (C10NC) ● ø4 (C4NO) ● ø6 (C6NO) ● ø8 (C8NO) ● ø10 (C10NO)

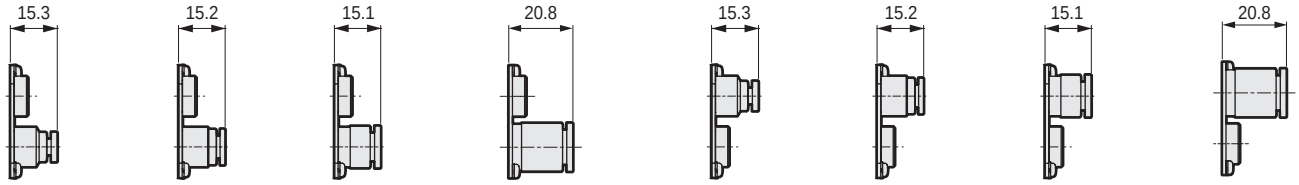

● L Fitting (upward)

● ø6(CL6) ● ø8(CL8)

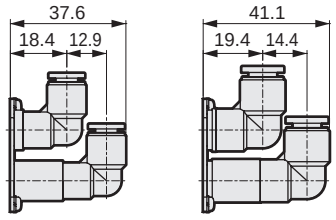

● L Fitting (downward)

● ø6(CD6) ● ø8(CD8)

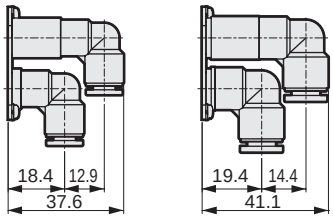

● L Fitting (upward), single plug

● ø6(CL6NC) ● ø8(CL8NC) ● ø6(CL6NO) ● ø8(CL8NO)

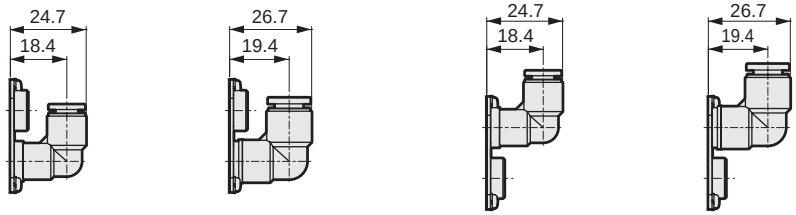

● L Fitting (downward), single plug

● ø6(CD6NC) ● ø8(CD8NC) ● ø6(CD6NO) ● ø8(CD8NO)

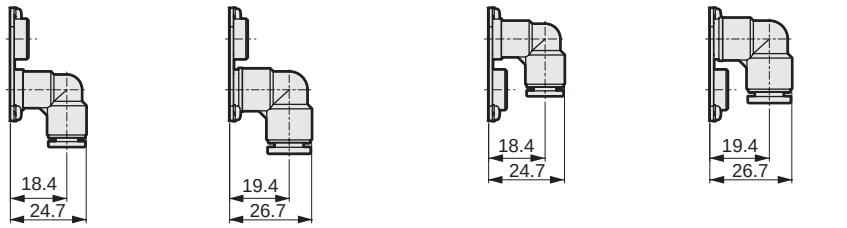

Dimensions

Fitting straight

● ø1/4" (C6N)

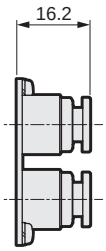

● ø5/16" (C8N)

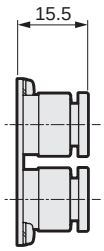

● Fitting straight, single plug

● ø1/4" (C6NCN)

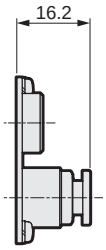

● ø5/16" (C8NCN)

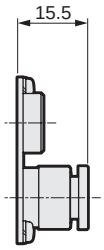

● ø1/4" (C6NON)

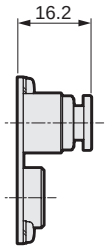

● ø5/16" (C8NON)

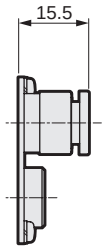

● L fitting (upward)

● ø1/4" (CL6N)

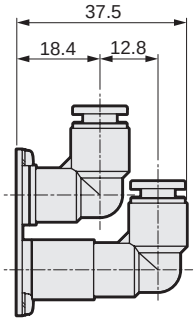

● ø5/16" (CL8N)

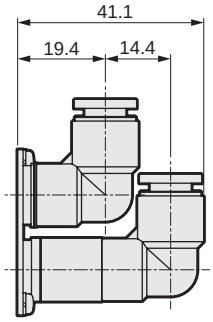

● ø1/8" (CD6N)

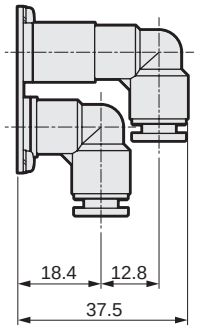

● ø5/32" (CD8N)

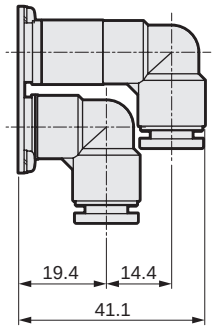

● L fitting (upward), single plug

● ø1/4" (CL6NCN)

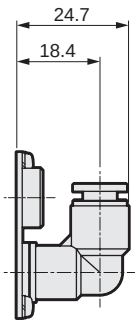

● ø5/16" (CL8NCN)

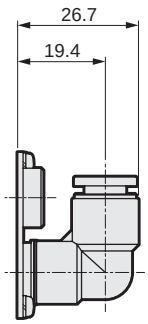

● ø1/4" (CL6NON)

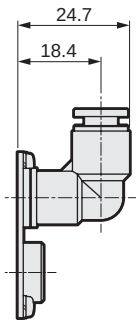

● ø5/16" (CL8NON)

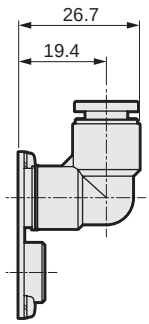

● L fitting (downward), single plug

● ø1/4" (CD6NCN)

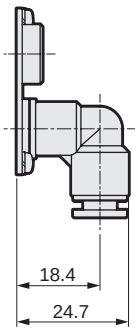

● ø5/16" (CD8NCN)

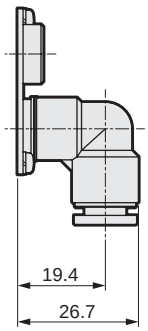

● ø1/4" (CD6NON)

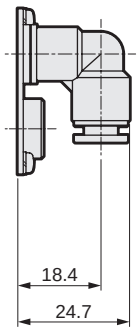

● ø5/16" (CD8NON)

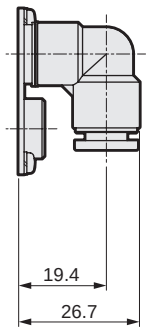

Dimensions CAD

M4GB3

● Reduced wiring left side type (T10/T11/T30/T50/T51/T52/T53)

* Figure shows T10. Refer to page 186 for detailed wiring block dimensions.
* Refer to page 854 for mounting hole details.

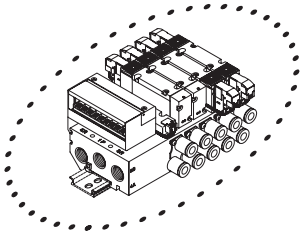

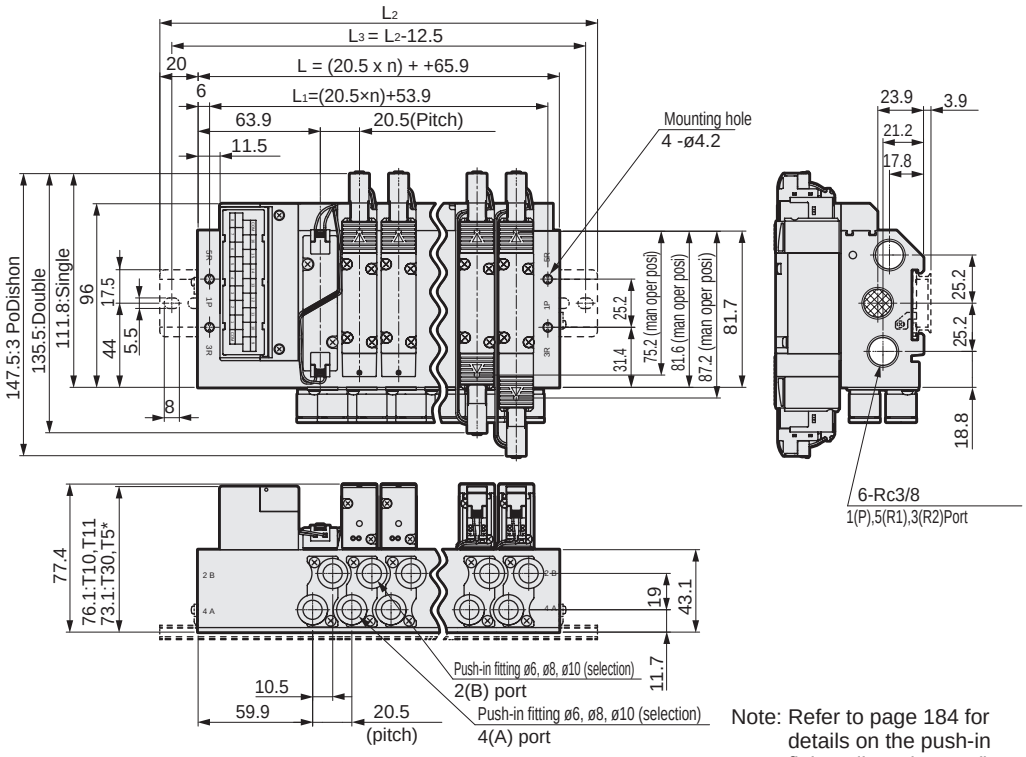

Note: Refer to page 184 for details on the push-in fitting elbow (upward) (downward).

● Reduced wiring right side type (T10R/T11R/T30R/T50R/T51R/T52R/T53R)

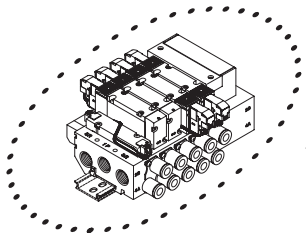

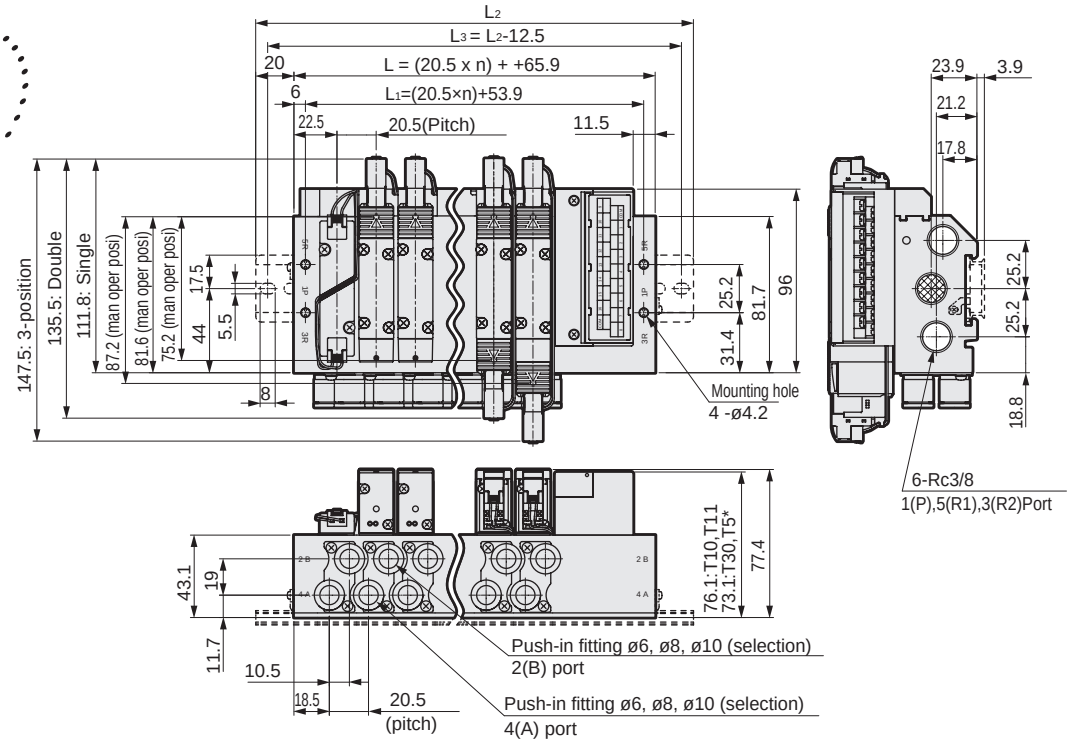

Station No.	2	3	4	5	6	7	8	9	10	11	12	13	14	15	16
L	106.9	127.4	147.9	168.4	188.9	209.4	229.9	250.4	270.9	291.4	311.9	332.4	352.9	373.4	393.9
L_1	94.9	115.4	135.9	156.4	176.9	197.4	217.9	238.4	258.9	279.4	299.9	320.4	340.9	361.4	381.9
L_2	150.0	175.0	200.0	212.5	237.5	250.0	275.0	300.0	312.5	337.5	362.5	375.0	400.0	425.0	437.5
L_3	137.5	162.5	187.5	200.0	225.0	237.5	262.5	287.5	300.0	325.0	350.0	362.5	387.5	412.5	425.0

Dimensions

M4GB3

● Reduced wiring left side type (T10/T11/T30/T50/T51/T52/T53)
External pilot (K)

* Figure shows T30. Refer to page 186 for detailed wiring block dimensions.
* Refer to page 854 for mounting hole details.

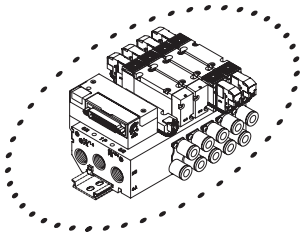

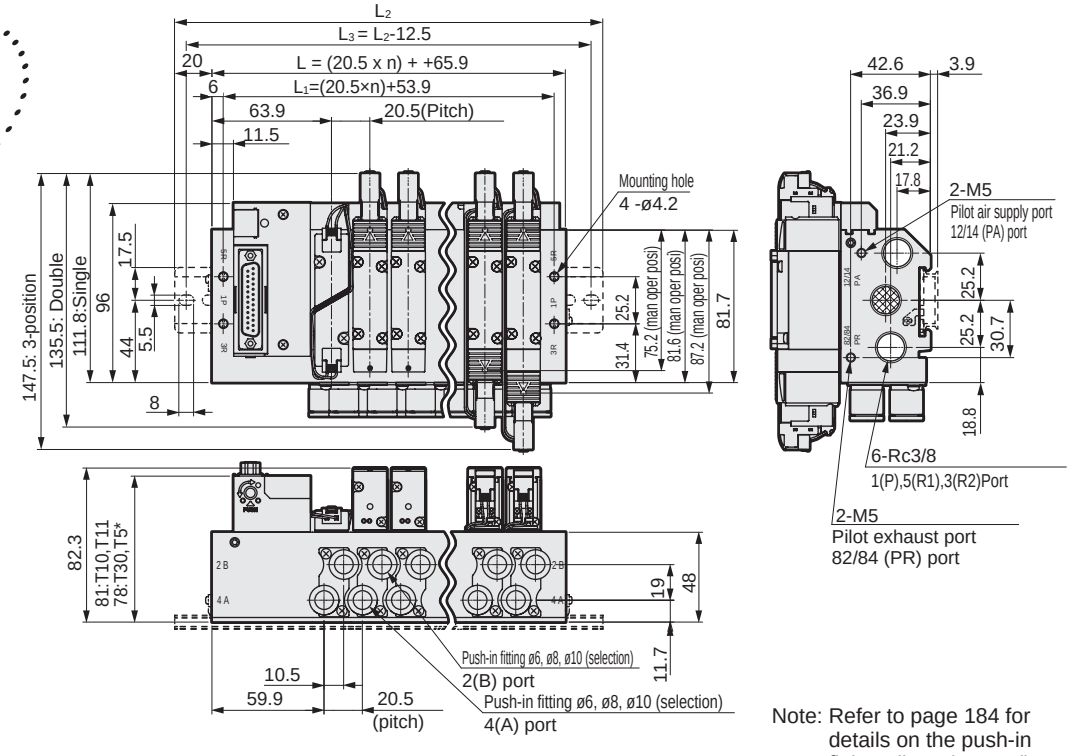

Note: Refer to page 184 for details on the push-in fitting elbow (upward) (downward).

● Reduced wiring right side type (T10R/T11R/T30R/T50R/T51R/T52R/T53R)
External pilot (K)

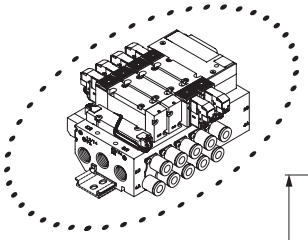

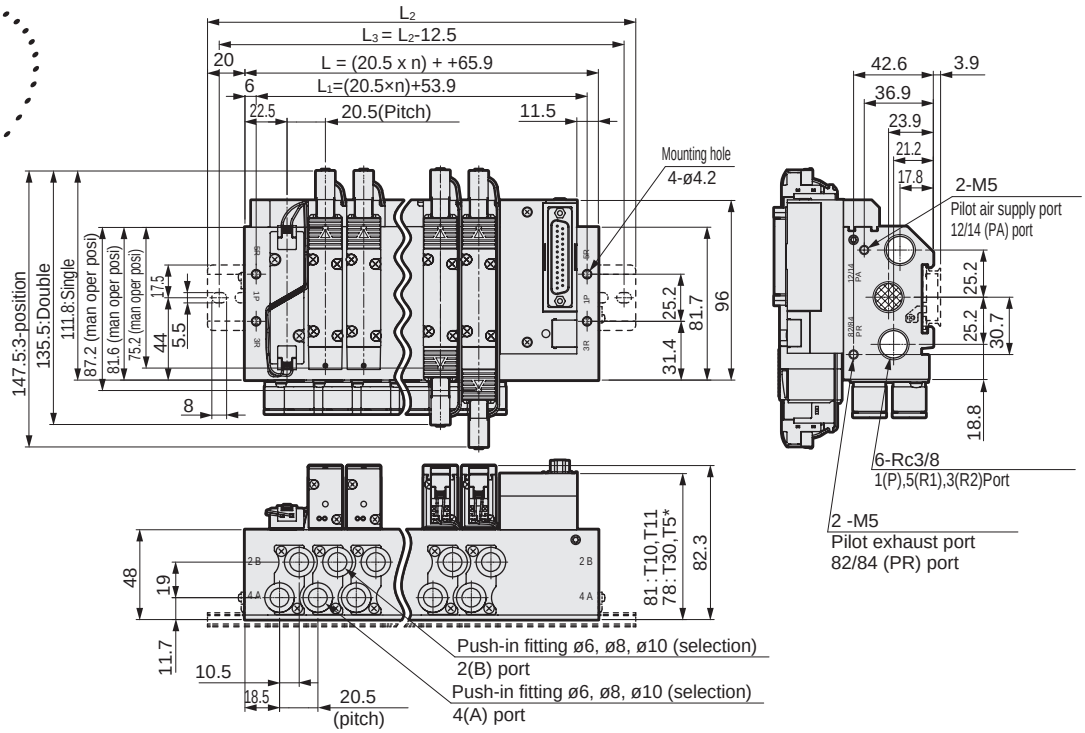

Station No.	2	3	4	5	6	7	8	9	10	11	12	13	14	15	16
L	106.9	127.4	147.9	168.4	188.9	209.4	229.9	250.4	270.9	291.4	311.9	332.4	352.9	373.4	393.9
L_1	94.9	115.4	135.9	156.4	176.9	197.4	217.9	238.4	258.9	279.4	299.9	320.4	340.9	361.4	381.9
L_2	150.0	175.0	200.0	212.5	237.5	250.0	275.0	300.0	312.5	337.5	362.5	375.0	400.0	425.0	437.5
L_3	137.5	162.5	187.5	200.0	225.0	237.5	262.5	287.5	300.0	325.0	350.0	362.5	387.5	412.5	425.0

Dimensions CAD

M4GB3

* Refer to page 854 for mounting hole details.

● Serial transmission (T6G1)
DIN rail mounting (D)

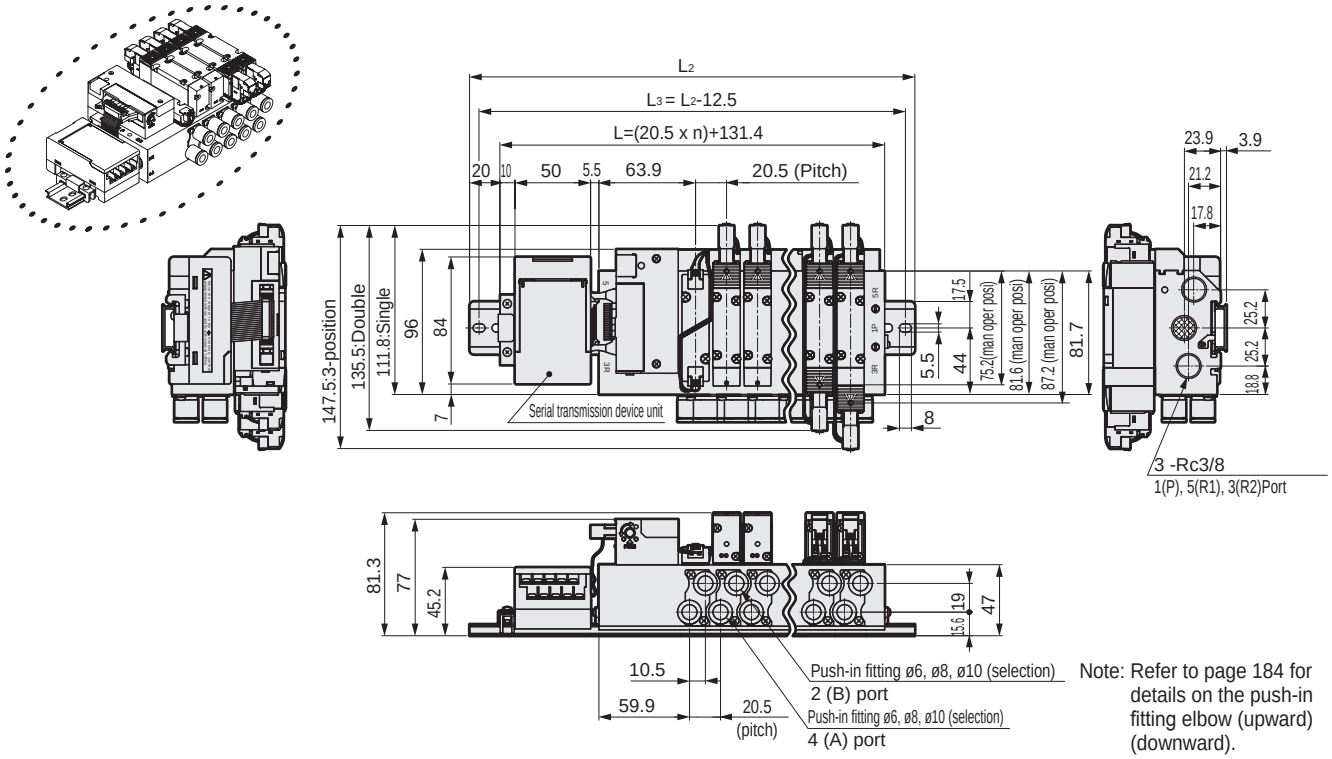

Note: Refer to page 184 for details on the push-in fitting elbow (upward) (downward).

● Serial transmission (T6G1)
DIN rail mounting (D); External pilot (K)

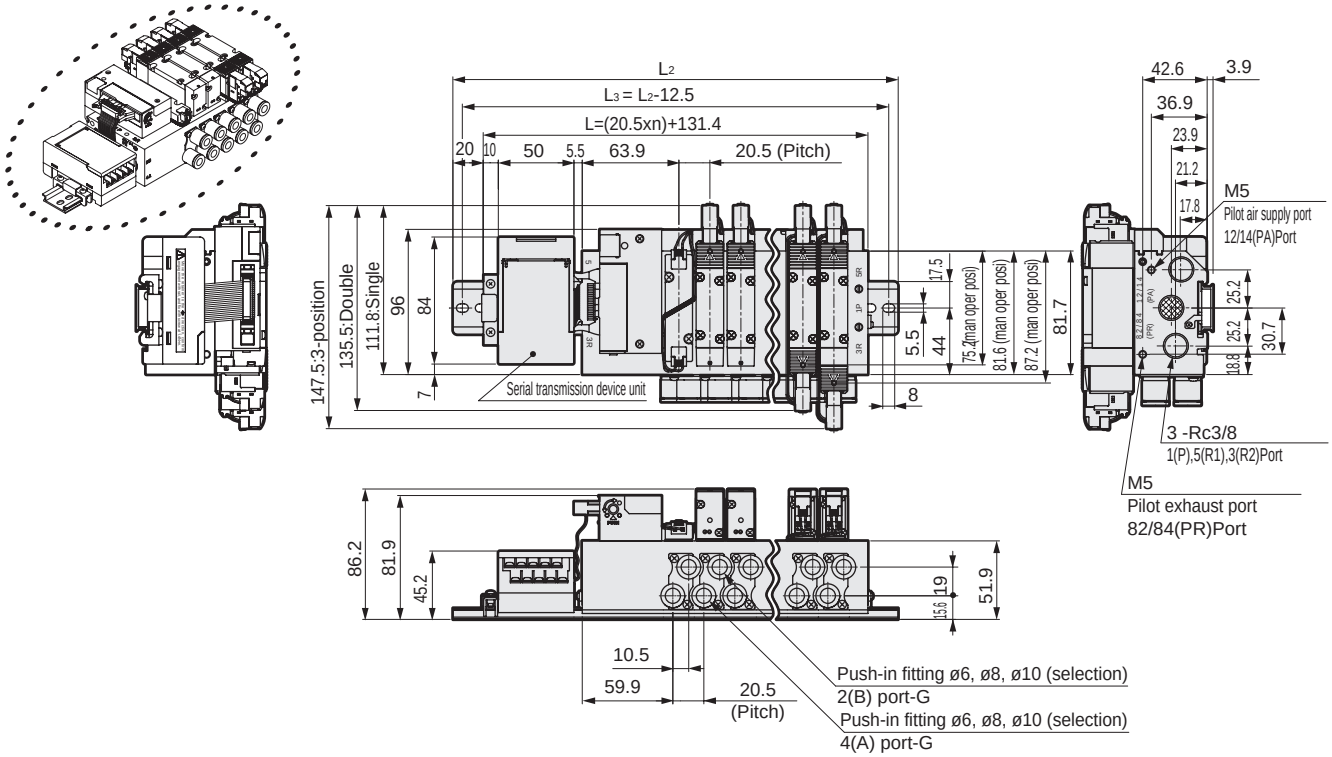

Station No.	2	3	4	5	6	7	8	9	10	11	12	13	14	15	16
L	172.4	192.9	213.4	233.9	254.4	274.9	295.4	315.9	336.4	356.9	377.4	397.9	418.4	438.9	459.4
L_2	212.5	237.5	262.5	275.0	300.0	325.0	337.5	362.5	387.5	400.0	425.0	450.0	462.5	487.5	500.0
L_3	200.0	225.0	250.0	262.5	287.5	312.5	325.0	350.0	375.0	387.5	412.5	437.5	450.0	475.0	487.5

Dimensions

M4GB3

* Refer to page 854 for mounting hole details.

● Serial transmission (T8*)
DIN rail mounting (D)

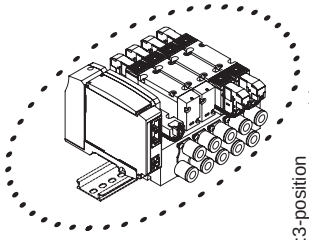

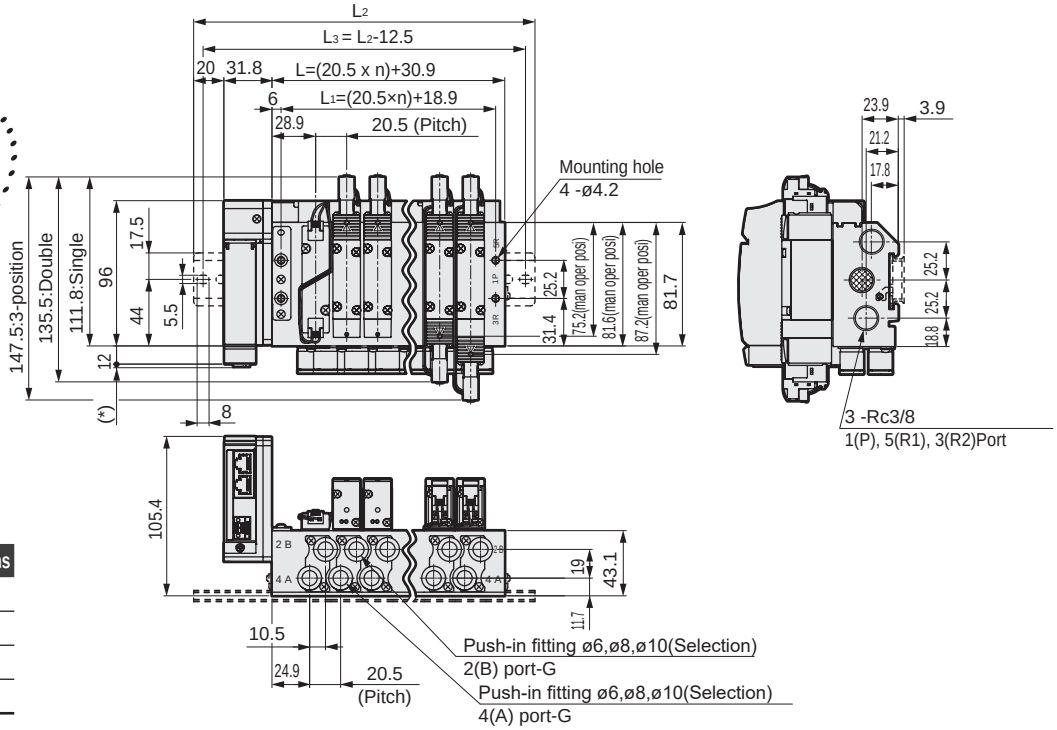

Serial transmission	* Dimensions
T8G □	1.0
T8P □	4.9
T8E □	1.5
T8D □	1.0

Station No.	2	3	4	5	6	7	8	9	10	11	12	13	14	15	16
L	71.9	92.4	112.9	133.4	153.9	174.4	194.9	215.4	235.9	256.4	276.9	297.4	317.9	338.4	358.9
L_1	59.9	80.4	100.9	121.4	141.9	162.4	182.9	203.4	223.9	244.4	264.9	285.4	305.9	326.4	346.9
L_2	150.0	175.0	187.5	212.5	237.5	250.0	275.0	287.5	312.5	337.5	350.0	375.0	400.0	412.5	437.5
L_3	137.5	162.5	175.0	200.0	225.0	237.5	262.5	275.0	300.0	325.0	337.5	362.5	387.5	400.0	425.0

● Serial transmission (T8*)
DIN rail mounting (D); External pilot (K)

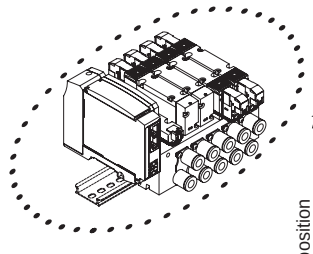

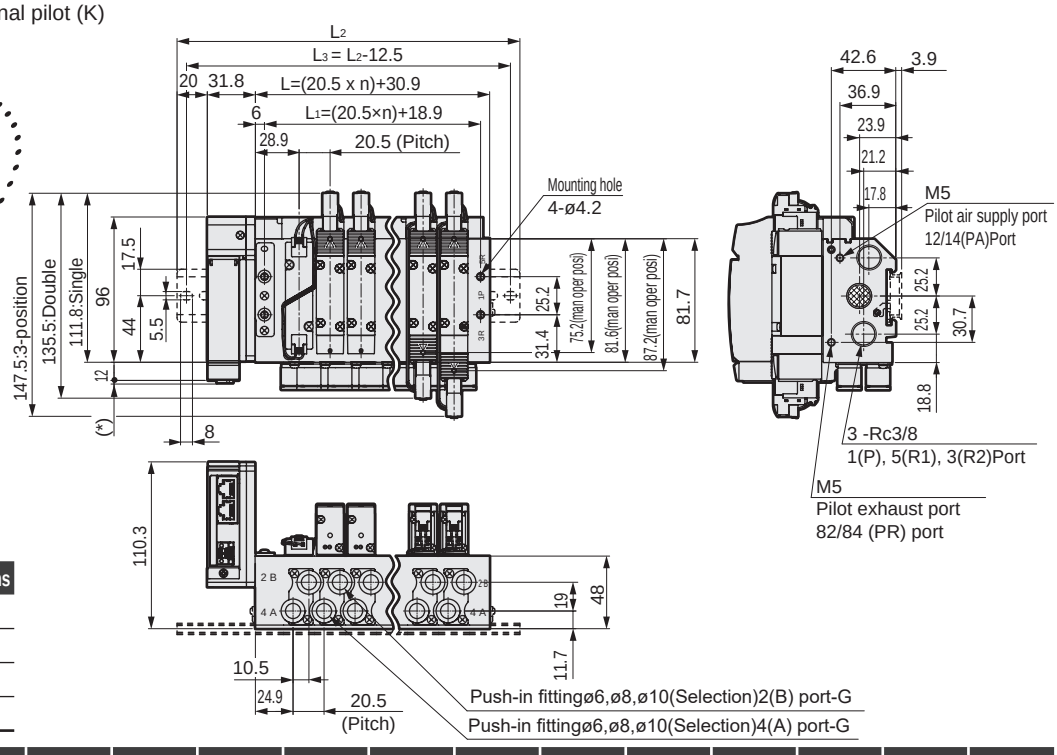

Serial transmission	* Dimensions
T8G □	1.0
T8P □	4.9
T8E □	1.5
T8D □	1.0

Station No.	2	3	4	5	6	7	8	9	10	11	12	13	14	15	16
L	71.9	92.4	112.9	133.4	153.9	174.4	194.9	215.4	235.9	256.4	276.9	297.4	317.9	338.4	358.9
L_1	59.9	80.4	100.9	121.4	141.9	162.4	182.9	203.4	223.9	244.4	264.9	285.4	305.9	326.4	346.9
L_2	150.0	175.0	187.5	212.5	237.5	250.0	275.0	287.5	312.5	337.5	350.0	375.0	400.0	412.5	437.5
L_3	137.5	162.5	175.0	200.0	225.0	237.5	262.5	275.0	300.0	325.0	337.5	362.5	387.5	400.0	425.0

Dimensions

M4GB3

● Fitting straight

● ø6(C6) ● ø8(C8) ● ø10(C10)

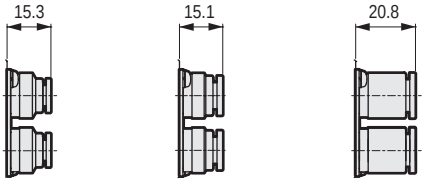

● Fitting straight, single plug

● ø6(C6NC) ● ø8(C8NC) ● ø10(C10NC) ● ø6(C6NO) ● ø8(C8NO) ● ø10(C10NO)

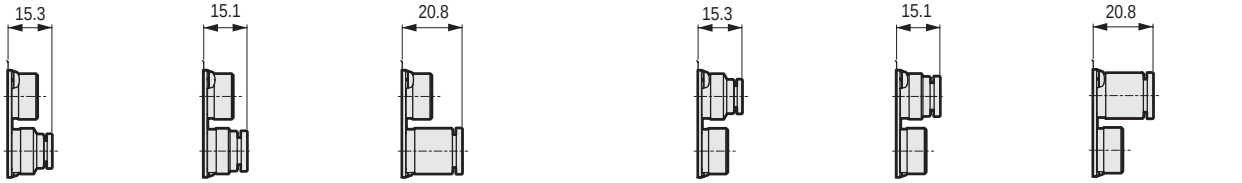

● L Fitting (upward)

● ø8(CL8) ● ø10(CL10)

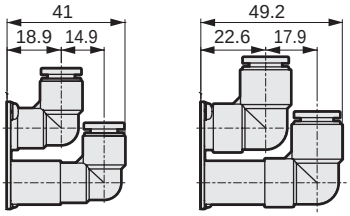

● L Fitting (downward)

● ø8(CD8) ● ø10(CD10)

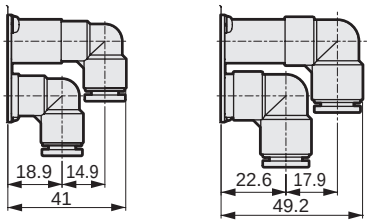

● L Fitting (upward), single plug

● ø8(CL8NC) ● ø10(CL10NC) ● ø8(CL8NO) ● ø10(CL10NO)

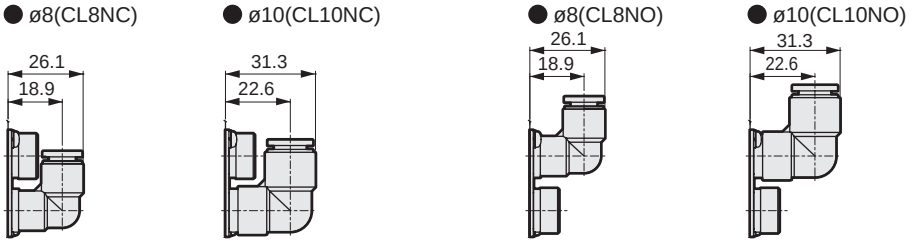

L Fitting (downward), single plug

● ø8(CD8NC) ● ø10(CD10NC) ● ø8(CD8NO) ● ø10(CD10NO)

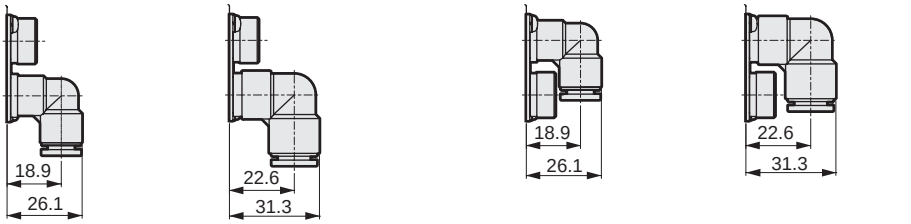

Dimensions

● Fitting straight

● ø5/16" (C8N)

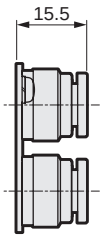

● ø3/8" (C10N)

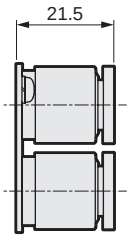

● Fitting straight, single plug

● ø5/16" (C8NCN)

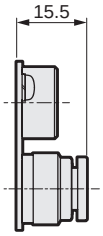

● ø3/8" (C10NCN)

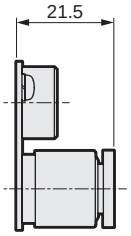

● ø5/16" (C8NON)

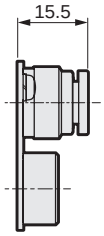

● ø3/8" (C10NON)

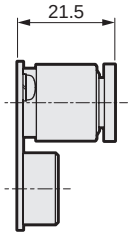

● L fitting (upward)

● ø5/16" (CL8N)

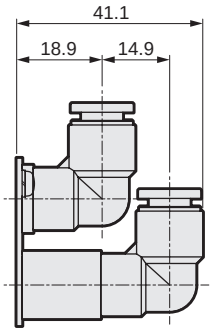

● ø3/8" (CL10N)

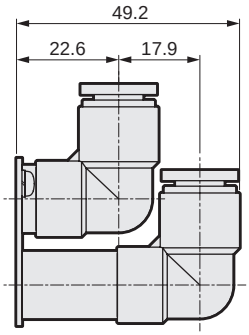

● ø5/16" (CD8N)

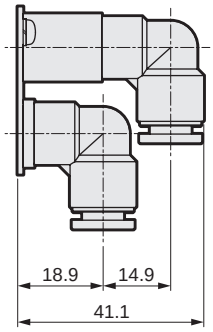

● ø3/8" (CD10N)

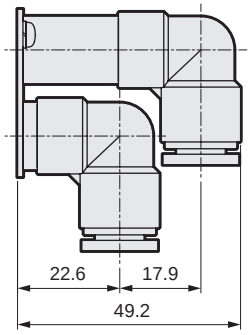

● L fitting (upward), single plug

● ø5/16" (CL8NCN)

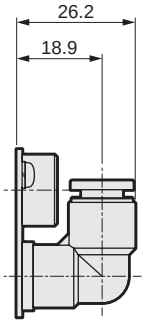

● ø3/8" (CL10NCN)

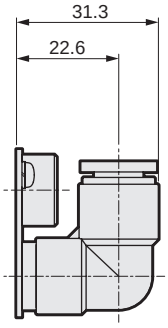

● ø5/16" (CL8NON)

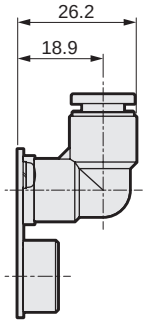

● ø3/8" (CL10NON)

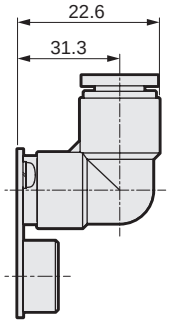

● L fitting (downward), single plug

● ø5/16" (CD8NCN)

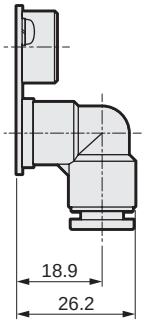

● ø3/8" (CD10NCN)

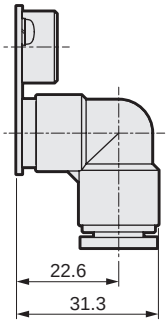

● ø5/16" (CD8NON)

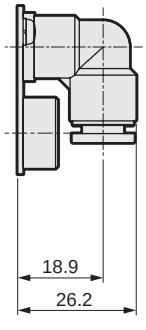

● ø3/8" (CD10NON)

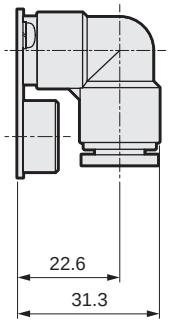

Reduced wiring part: Dimensions

●Common terminal block (M3 thread) T10

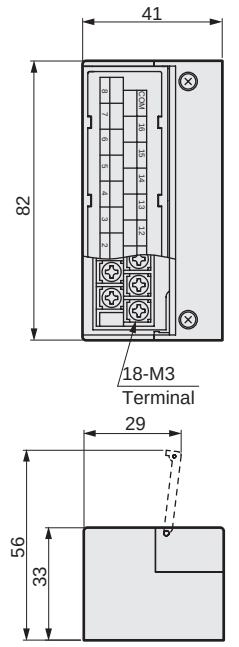

●Common terminal block (clamping) T11

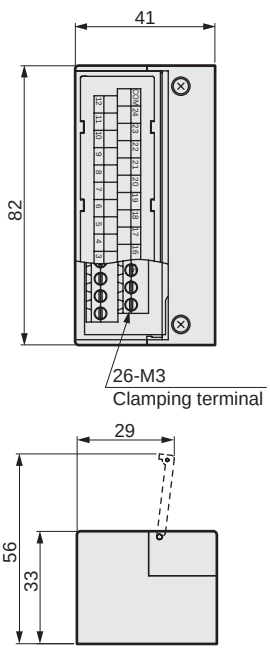

●D sub-connector T30

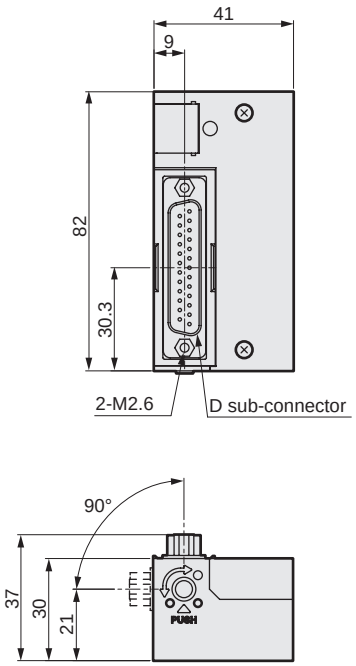

●20-pin flat cable connector (with power supply terminal) T50

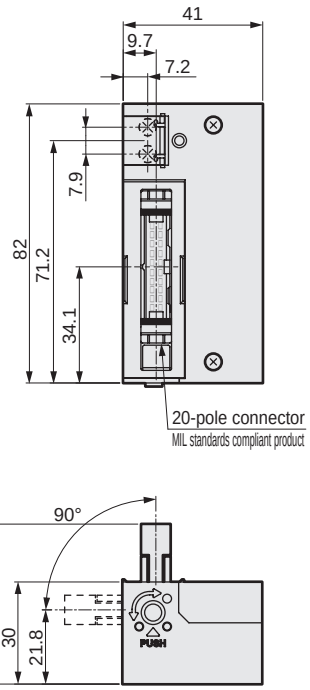

●20-pin flat cable connector (without power supply terminal) T51

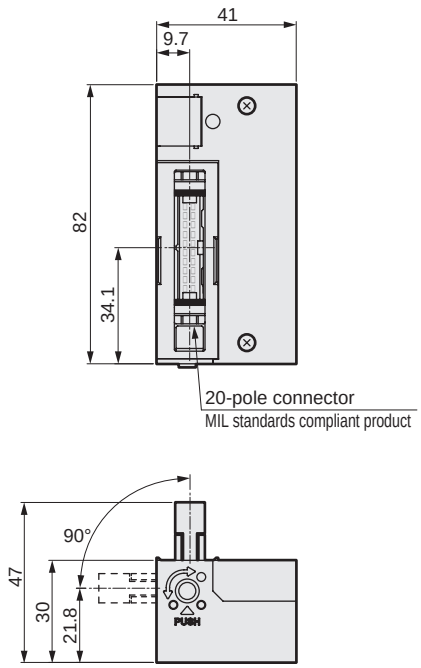

●10-pin flat cable connector (without power supply terminal) T52

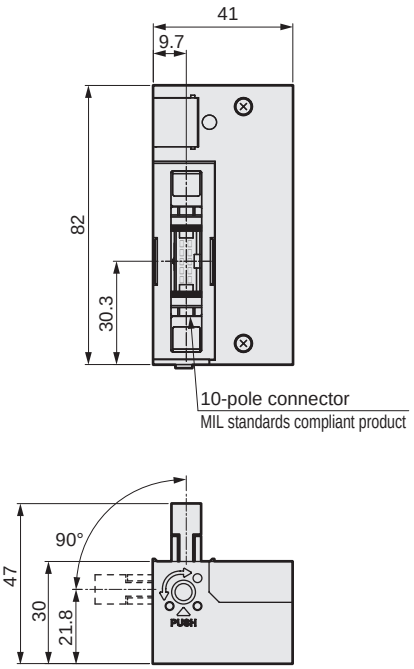

●26-pin flat cable connector (without power supply terminal) T53

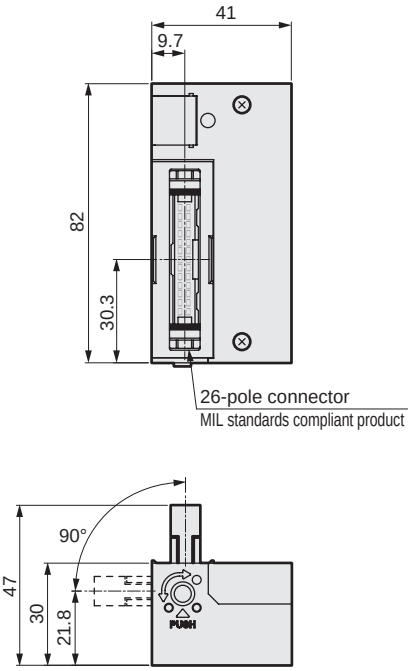

● Discrete serial transmission device unit (connector type)

4GR – OPP3 – 1G

Ⓐ Wiring method

Code	Description			
Ⓐ **Wiring method**				
1G	T6G1	CC-LINK	NPN	16 points

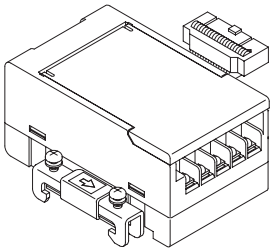

● Discrete serial transmission device unit (thin slot type)

4GR – OPP7 – 2G

Ⓐ Wiring method

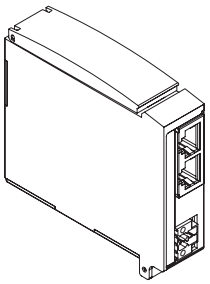

Code	Description			
Ⓐ **Wiring method**				
1G	T8G1	CC-Link	NPN	16 points
2G	T8G2			32 points
1G-P	T8GP1		PNP	16 points
2G-P	T8GP2			32 points
1P	T8P1	PROFIBUS-DP	NPN	16 points
2P	T8P2			32 points
1P-P	T8PP1		PNP	16 points
2P-P	T8PP2			32 points
1EC	T8EC1	EtherCAT	NPN	16 points
2EC	T8EC2			32 points
1EC-P	T8ECP1		PNP	16 points
2EC-P	T8ECP2			32 points
1EN	T8EN1	EtherNet/IP	NPN	16 points
2EN	T8EN2			32 points
1EN-P	T8ENP1		PNP	16 points
2EN-P	T8ENP2			32 points
1D	T8D1	DeviceNet	NPN	16 points
2D	T8D2			32 points
1D-P	T8DP1		PNP	16 points
2D-P	T8DP2			32 points
1EB	T8EB1	CC-Link IEF Basic	NPN	16 points
2EB	T8EB2			32 points
1EB-P	T8EBP1		PNP	16 points
2EB-P	T8EBP2			32 points
1EP	T8EP1	PROFINET	NPN	16 points
2EP	T8EP2			32 points
1EP-P	T8EPP1		PNP	16 points
2EP-P	T8EPP2			32 points

Related products

● In-stop valve spacer

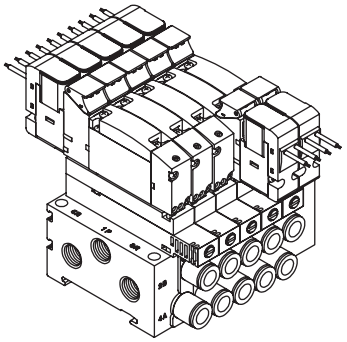

Specifications

Model No.	P→A/B		A/B→R		Weight g
	C[dm³/(s·bar)]	b	C[dm³/(s·bar)]	b	
4G1	0.54	0.03	0.82	0.27	17
4G2	1.5	0.17	1.6	0.20	63
4G3	1.9	0.09	2.8	0.16	80

*1: Values with base piping and 2-position valve mounted.
*2: The effective cross-sectional area when discharging residual pressure is 1.0 mm^2 (reference value).
*3: Effective cross-sectional area S and sonic conductance C are converted as S ≈ 5.0 x C.
Attachments: 2 PR check valves, 1 body gasket (for 4G*2 and 4G*3)

How to order discrete units

4G1R - IS
4G2R - IS
4G3R - IS

In-stop valve spacer

JIS symbol

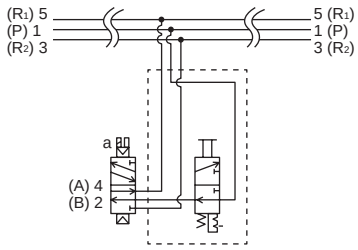

⚠ Precautions for model No. selection

*1 : Specify the spacer mounting position and quantity in manifold specifications sheet.
*2 : If the A/B port fitting is the elbow (upward), turn the operation part of the in-stop valve spacer toward the reverse side (“a” solenoid side).
*3 : If the elbow (upward) A/B port fitting is used for the reduced wiring manifold, the in-stop valve spacer cannot be selected.
*4 : The in-stop valve spacer cannot be used with the external pilot (K).
*5 : When retrofitting to the reduced wiring manifold, the existing electric wire may be too short. Contact CKD for details.

Dimensions

● 4G1

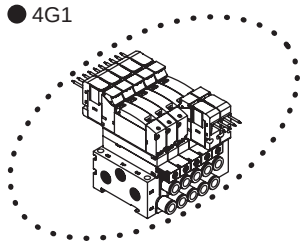

● 4G2

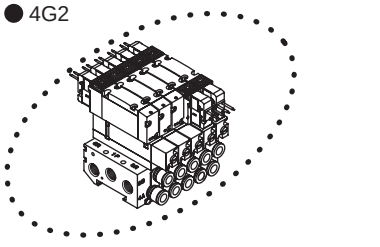

● 4G3

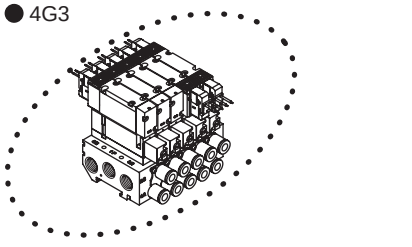

Dimensions when mounted

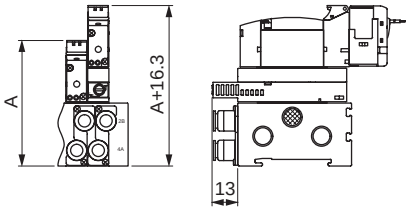

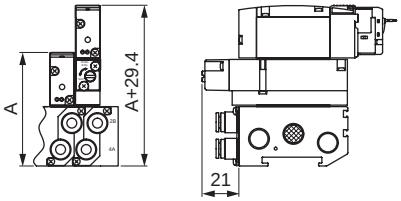

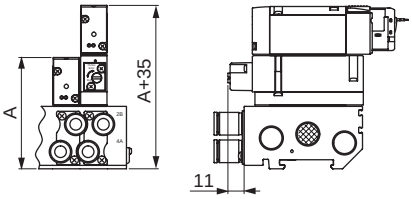

Note: For A dimensions, check the dimensions of respective specifications.

Related products

● Air supply spacer

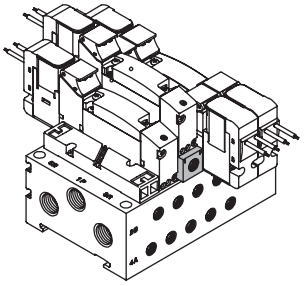

Specifications

Model No.	P → A/B		A/B→R		Weight g
	C(dm³/(s·bar))	b	C(dm³/(s·bar))	b	
4G1	0.70	0.23	0.93	0.16	8
4G2	1.6	0.17	1.8	0.16	35
4G3	2.6	0.22	3.1	0.14	56

*1: Values are when a valve is mounted.
*2: Formula to calculate sonic conductance C from effective cross-sectional area S is S≈5.0xC.

How to order discrete units

● Air supply spacer

Air supply spacer model No.

4G 3 R-P- GWS10 A

Ⓐ Air supply spacer model No.
Ⓑ Port size
Ⓒ Mounting screw

Code	Description	Valve model No. 4GA1	4GB1	4GA2	4GB2	4GA3	4GB3
Ⓐ Air supply spacer model No.							
1	For 4G1	●					
2	For 4G2			●			
3	For 4G3					●	
Ⓑ Port size							
Blank	M5(4G1), Rc1/8(4G2), Rc1/4(4G3)	●		●		●	
GWS4	ø4 push-in fitting	●					
GWS6	ø6 push-in fitting	●		●			
GWS8	ø8 push-in fitting			●		●	
GWS10	ø10 push-in fitting					●	
06N	NPT1/8			●			
08N	NPT1/4					●	
06G	G1/8			●			
08G	G1/4					●	
Ⓒ Mounting screw							
Blank		●		●		●	
A	4GA3 Port A/B: Rc1/4 thread					●(*1)	

is not available.

Accessories: Mounting screw 2 (*1), PR check valve 2, body gasket 1

⚠ Precautions for model No. selection

*1 Specify "A" only when using with 4GA3*9R-08 for mounting base. (The valve set screw length differs.)
*2 Specify the air supply spacer mounting position and quantity in manifold specifications sheet of each catalog.
*3 If the A/B port fitting is the elbow (upward), turn the air supply port of the air supply spacer toward the reverse side ("a" solenoid side).
*4 If the elbow (upward) A/B port fitting is used for the reduced wiring manifold, the air supply spacer cannot be selected.
*5 Combination with the masking plate is not supported.

Related products

● Air supply spacer

Dimensions

● 4G1

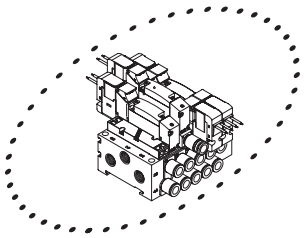

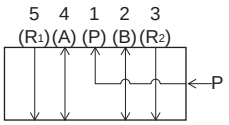

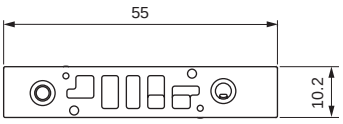



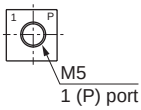

● 4G2

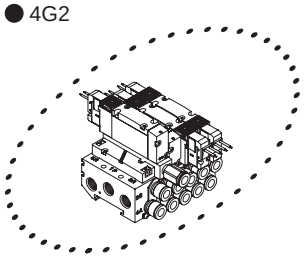

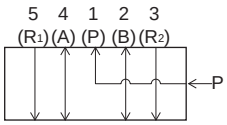

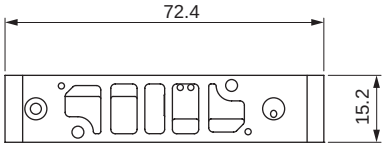



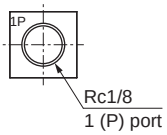

Dimensions when mounted

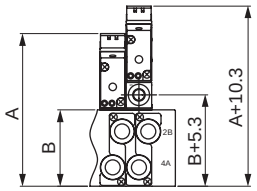

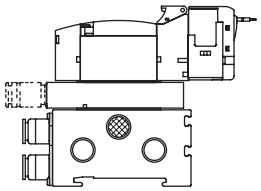

Dimensions when mounted

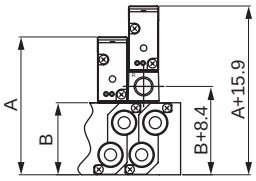

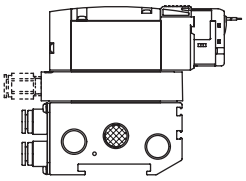

● 4G3

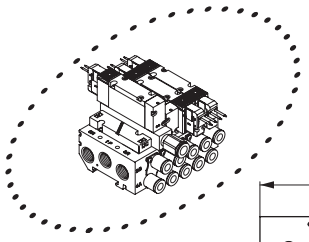

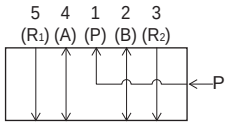

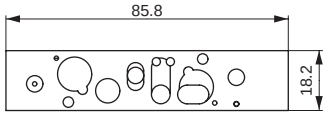



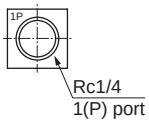

Dimensions when mounted

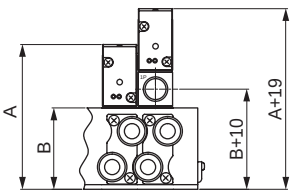

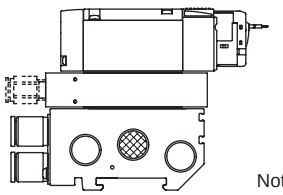

Note: For A and B dimensions, check the dimensions of respective specifications.

Related products

● Exhaust spacer

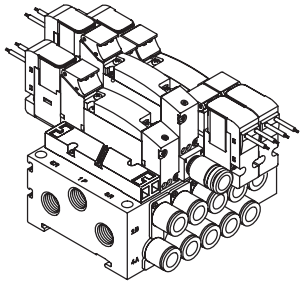

Specifications

Model No.	P→A/B		A/B→R		Weight g
	C[dm³/(s·bar)]	b	C[dm³/(s·bar)]	b	
4G1	0.94	0.28	0.68	0.33	7
4G2	1.5	0.24	1.9	0.24	34
4G3	3.4	0.21	2.9	0.27	58

*1: Values are when a valve is mounted.
*2: Formula to calculate sonic conductance C from effective cross-sectional area S is S≈5.0xC.

How to order discrete units

● Exhaust spacer

Exhaust spacer model No.

4G 3 R - R - GWS10 A

Ⓐ Air supply spacer model No.
Ⓑ Port size
Ⓒ Mounting screw

Code	Description	Valve model No. 4GA1	4GB1	4GA2	4GB2	4GA3	4GB3
Ⓐ Exhaust spacer model No.							
1	For 4G1	●					
2	For 4G2			●			
3	For 4G3					●	
Ⓑ Port size							
Blank	M5(4G1), Rc1/8(4G2), Rc1/4(4G3)	●		●		●	
GWS4	ø4 push-in fitting	●					
GWS6	ø6 push-in fitting	●		●			
GWS8	ø8 push-in fitting			●		●	
GWS10	ø10 push-in fitting					●	
06 N	NPT1/8			●			
06G	G1/8			●			
08G	G1/4					●	
Ⓒ Mounting screw							
Blank		●		●		●	
A	4GA3 Port A/B: Rc1/4 thread					● (*1)	

is not available.

Accessories: Mounting screw 2 (*1), PR check valve 2, body gasket 1

⚠ Precautions for model No. selection

*1 Specify "A" only when using with 4GA3*9R-08 for mounting base. (The valve set screw length differs.)
*2 Specify the exhaust spacer mounting position and quantity in manifold specifications sheet of each catalog.
*3 If the A/B port fitting is the elbow (upward), turn the exhaust port of the exhaust spacer toward the reverse side ("a" solenoid side).
*4 If the elbow (upward) A/B port fitting is used for the reduced wiring manifold, the air exhaust spacer cannot be selected.
*5 Combination with the masking plate is not supported.

Related products

● Exhaust spacer

Dimensions

● 4G1

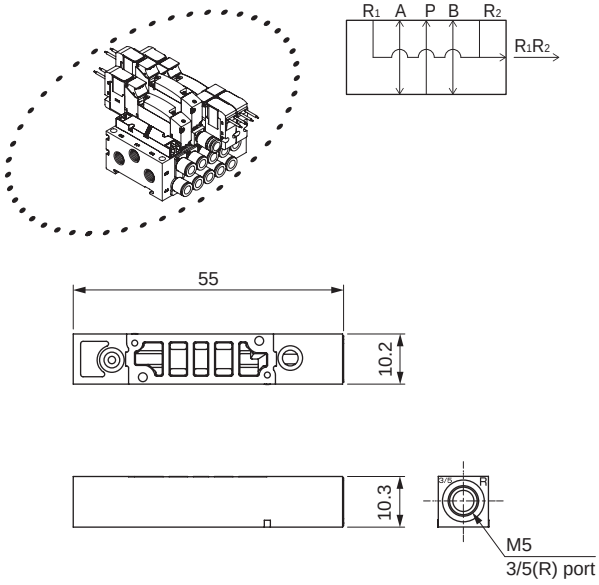

● 4G2

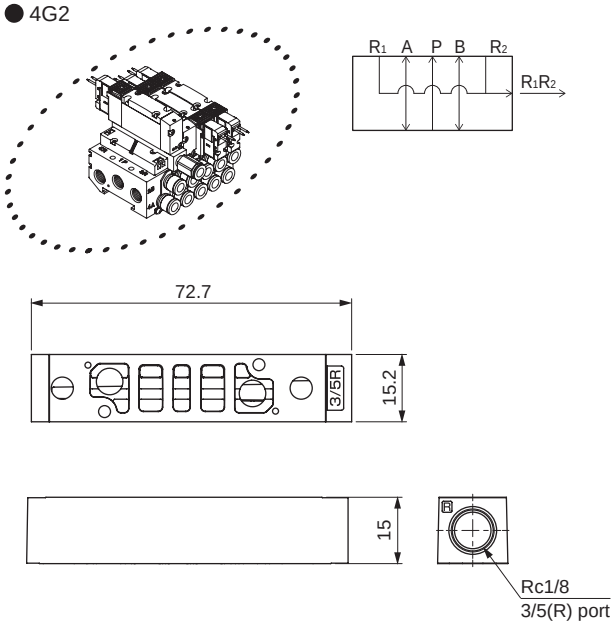

Dimensions when mounted

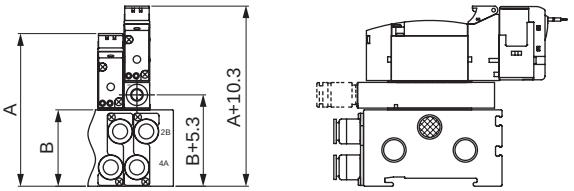

Dimensions when mounted

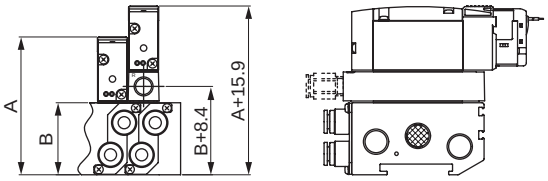

● 4G3

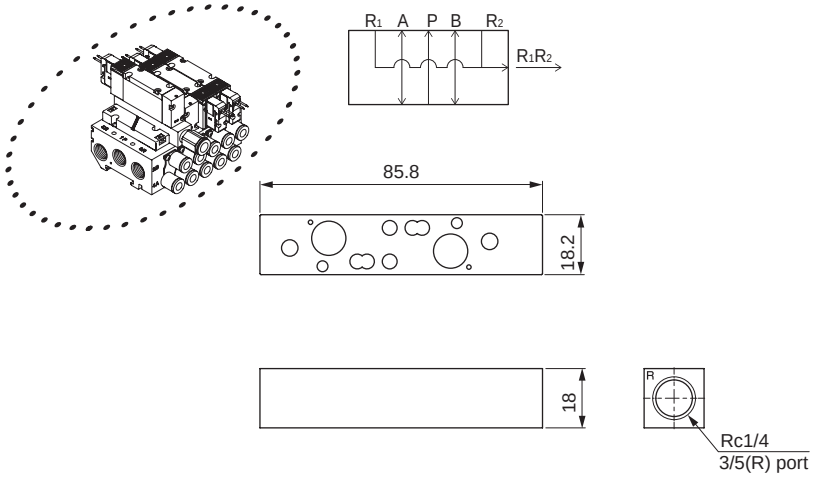

Dimensions when mounted

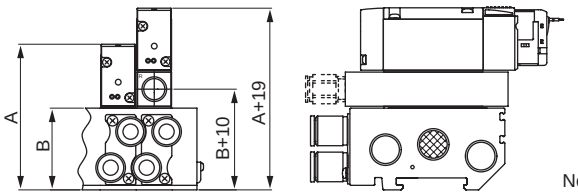

Note: For A and B dimensions, check the dimensions of respective specifications.

Related products

● Spacer pilot check valve

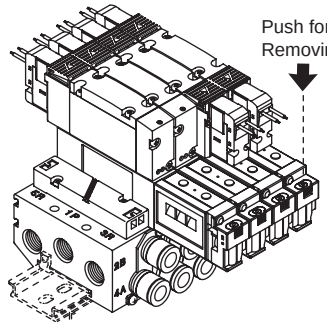

Specifications

Spacer pilot check valve		4G1R-PC-M	4G2R-PC-M
Working fluid		Compressed air	
Max. working pressure	MPa	0.7	
Min. working pressure	MPa	0.2	0.1
Proof pressure	MPa	1.05	
Effective cross-sectional area	mm^2	1.6 (Solenoid valve)	3.5 (Solenoid valve)
Ambient temperature	°C	−5 to 55 (no freezing)	
Working fluid temperature	°C	5 to 55	
Lubrication	(*1)	Not required	
Atmosphere		Cannot be used in corrosive gas environment.	
Weight	g	22	54

*1: Use turbine oil Class 1 ISO VG32 for lubrication.
Note that excessive lubricant may cause unstable operation.

JIS symbol

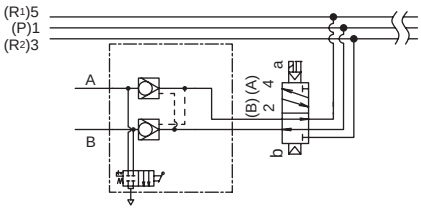

Note: Using a cylinder with a large diameter (more than ø50 as a guide) with little exhaust restriction (eg, no speed controller, no silencer) may lead to a decrease in intermediate stop accuracy and stopping error. Please be careful.

Discrete model No.

4G1R -PC- M

Ⓐ Model No.

Pilot check valve

Code	Description	Ⓐ Model No. 4G1R	Ⓐ Model No. 4G2R
Ⓑ **Residual pressure exhaust function**			
M	Manual override of non-locking	●	●
M1	Locking manual override	●	●
Blank	Without manual override	●	●

⚠ Precautions for model No. selection

*1: Specify the spacer positions in the manifold specifications sheet.
*2: Spacer pilot check valve is not available when the fitting for port A/B is elbow.
*3: Stacking of spacers is not possible.
*4: A spacer cannot be combined with a masking plate.
*5: The spacer pilot check valve can be mounted only when the piping method is base piping.

Dimensions

● M4GB1

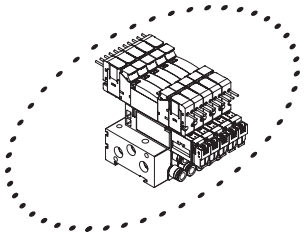

● M4GB2

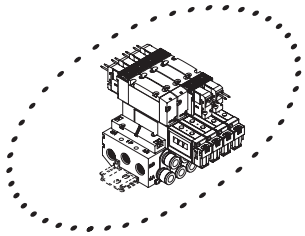

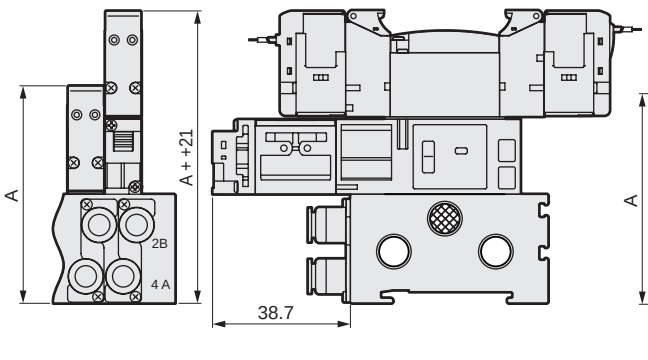

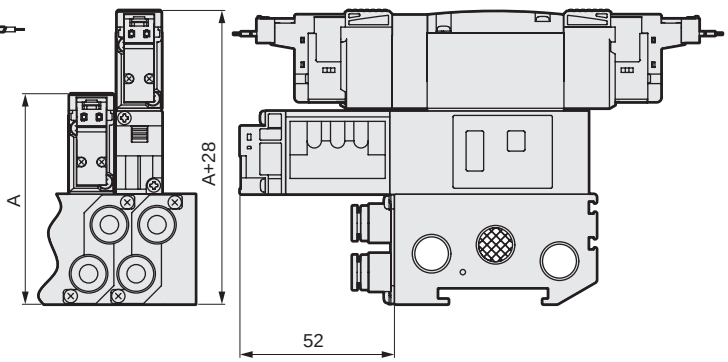

Note: For A dimensions, check the dimensions of the respective specifications.

Related products

● Pilot check valve

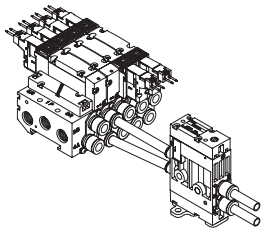

How to order

● Discrete model No.

4G2R − PCS − C4 − ○

● Manifold model No.

M4G2R − PCS − C4 − ○ − 5

Model No. | Pilot check valve | Ⓐ Port size (*1) | Ⓑ Option (*2) | Ⓒ Station No.

Specifications

Item	4G2R-PCS-*-*
Effective cross-sectional area mm²	11
Weight g	200

Code	Description	
Ⓐ Port size		
	Valve side port	Cylinder side port
C4	ø4 Push-in fitting	ø4 Push-in fitting
C6	ø6 Push-in fitting	ø6 Push-in fitting
C8	ø8 Push-in fitting	ø8 Push-in fitting
CL6	ø6 Push-in fitting	ø6 Push-in L fitting (upward)
CL8	ø8 Push-in fitting	ø8 Push-in L fitting (upward)
Ⓑ Option		
Blank	None	
F	A/B-port filter built in	
M	Manual non-locking	
D	DIN rail mount	
Ⓒ Station No.		
2	2 stations	
to	to	
10	10 stations	

JIS symbol

(Position locking)

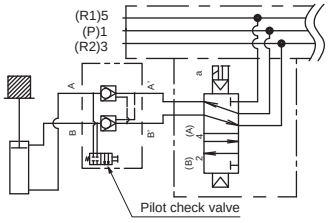

(Stopping)

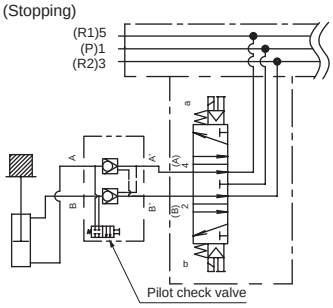

Example of leak comparison
All ports closed (solenoid) valve
10 cm³/min or less
Pilot check valve (4G2R-PCS)
0 to 0.3 cm³/min

⚠ Depending on use conditions, the pilot check valve body may emit resonance noise due to the air flow when the cylinder operates, but this is not an abnormality. Adjust the pipe length and bore size in that case.

⚠ Precautions for model No. selection

*1 : Contact CKD for information on mixing port sizes.
*2 : The following applies when Blank is selected as an option.
Manual override : Non-locking/locking common type,
Mounting method : Direct mounting.

Dimensions

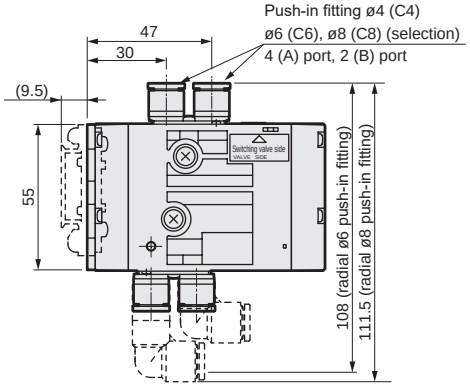

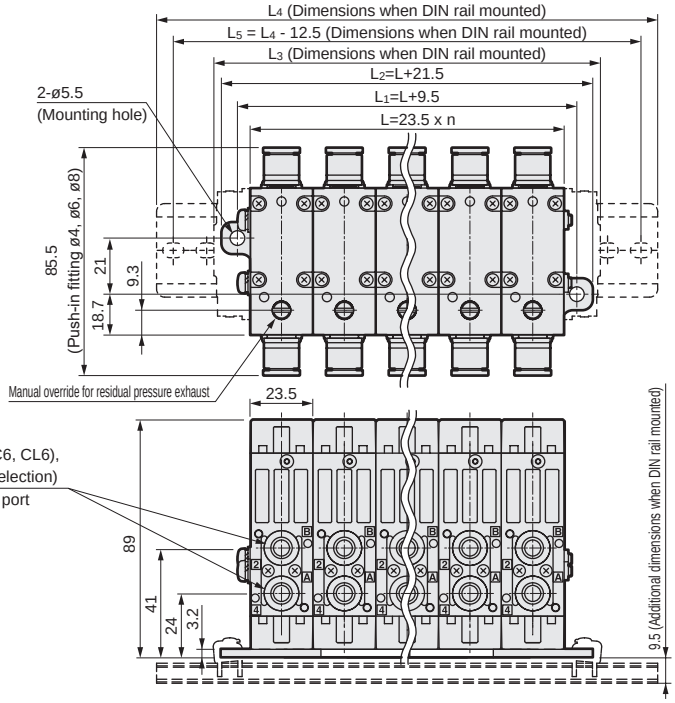

DIN rail length

Station No. C	1	2	3	4	5	6	7	8	9	10
L3	50.5	74,0	97.5	121.0	144.5	168.0	191.5	215.0	238.5	262.0
L4	100.0	112.5	137.5	162.5	187.5	212.5	237.5	262.5	287.5	312.5
L5	87.5	100.0	125.0	150.0	175.0	200.0	225.0	250.0	275.0	300.0

Related products

● Tie rod kit (for pilot check valve)
(For manifold connection and expansion) **4G2R − PCS − TR − V1**

Ⓐ Type (*1)

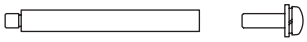

Ⓐ Type	
V1	For 1 station
V2	For 2 stations
V3	For 3 stations
V4	For 4 stations
V5	For 5 stations

⚠ Precautions for model No. selection

*1: Select the V1 to V5 combination when using six or more stations.

● DIN rail adapter kit (for pilot check valve)
(The DIN rail adapter kit is required for the following reassembly)

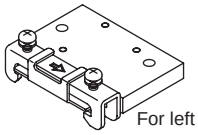
For left

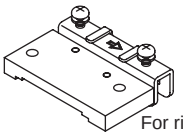
For right

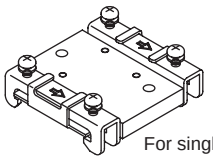
For single unit

4G2R − PCS − D1

Ⓐ Type

Ⓐ Type	DIN rail adapter kit selection list based on changes in specifications				
Descriptions / Code		Change from mounting plate to DIN rail		Add/Remove stations with DIN rail mount		Content
		For 1 station	2 or more stations	≥2 stations → 1 station	1 station → ≥2 stations	
D1	For right				● (*2)	DIN rail adapter (right) 1, thread 2
D2	Right + left		●			DIN rail adapter (right) 1, DIN rail adapter (left) 1, thread 4
D3	For single unit	●		●		DIN rail adapter (single unit) 1, thread 2

*2: When changing from 1 station to 2 or more stations, purchase the DIN rail adapter for right (D1), and remove the retainer on one side of the current DIN rail adapter kit (D3).

● Push-in cartridge fitting

ø1.8 axial
4G1R-JOINT-C18



ø1.8 barbed
4G1R-JOINT-CF

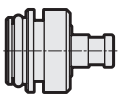

ø1.8L/ø4L/ø6L/ø8L/ø10L type (short elbow)
4G1R-JOINT-CL18/CL4/CL6
4G2R-JOINT-CL6/CL8
4G3R-JOINT-CL8/CL10

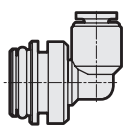

ø1.8L/ø4L/ø6L/ø8L/ø10L type (long elbow)
4G1R-JOINT-CLL18/CLL4/CLL6
4G2R-JOINT-CLL6/CLL8
4G3R-JOINT-CLL8/CLL10

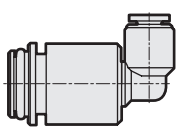

Related products

● Residual pressure exhaust option

For manifolds

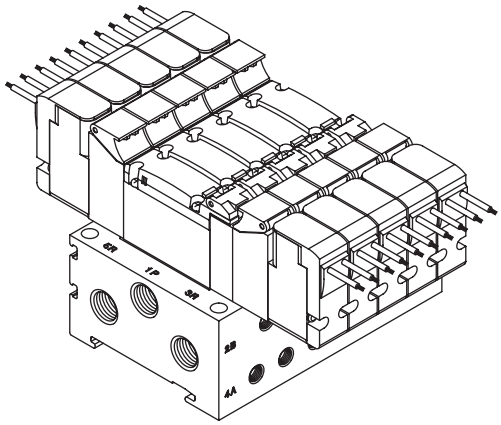

Discrete valve

4GB1

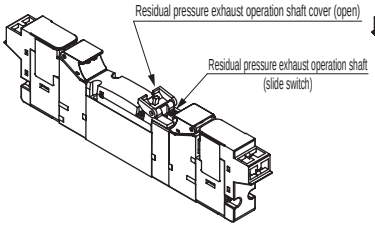

4GB2

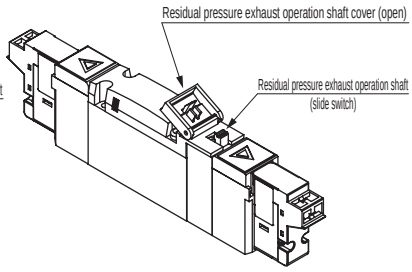

Example of model No.

● Manifold model No.

M4GB1 4 0R - C4 - E2 X1 - 10 - 3

- Ⓐ Model No.
- Ⓑ Solenoid position
- Ⓒ Port size
- Ⓓ Electrical connections
- Ⓔ Option
- Ⓕ Station No.
- Ⓖ Voltage

Code	Description	Ⓐ Model No. M4GB1	Ⓐ Model No. M4GB2
Ⓔ Option			
X	Non-locking exhaust structure	●	●
X1	Locking exhaust structure	●	●

Pressure sensor (G1, G2) and residual pressure exhaust structure (X, X1) cannot be selected simultaneously.
Exhaust structure is only compatible with 4GB1 and 4GB2 valve positions 3 and 4.

* Refer to How to order for each series for details about model numbers.

Applications

- 3-position all ports closed residual pressure exhaust for emergency stop
- Rod transfer after intermediate cylinder stop for three-position APR connection (with malfunction prevention valve)

When residual pressure exhaust valve is not used	When residual pressure exhaust valve is used
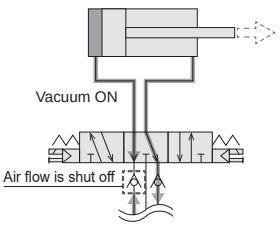	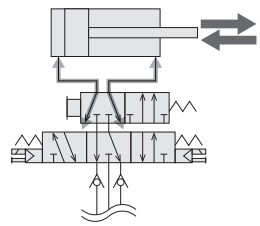
Check valve shuts off air flow. The cylinder rod cannot be adjusted.	The residual pressure discharger enables communication with the atmosphere. The cylinder rod can be adjusted.

Dimensions

● M4GB1

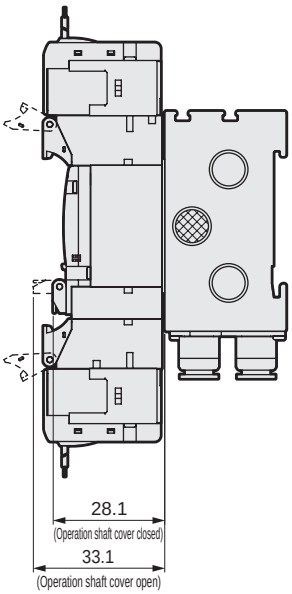

● M4GB2

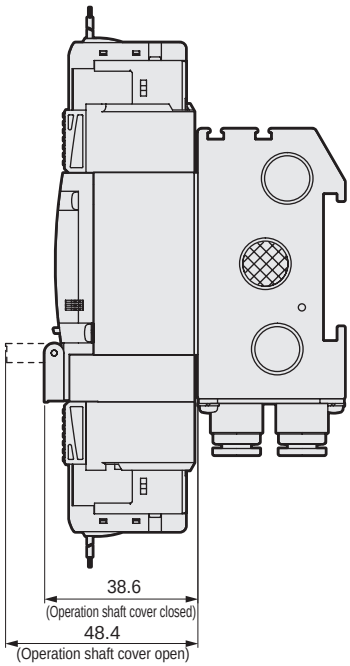

Related products

● Double wiring (single spare wiring)

For manifolds

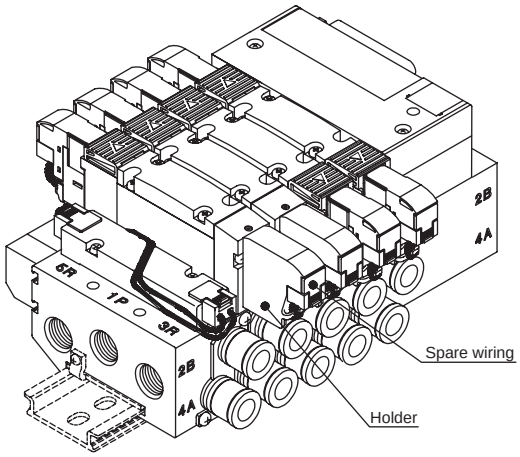

For discrete valves (2-position single)

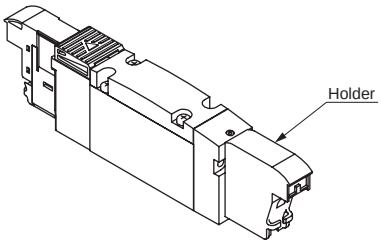

A holder for retaining the socket assembly is included.
(Not included for A type sockets.)
This can be used to hold the socket assembly no longer required when changing the valve from a double solenoid to a single solenoid.

Spare wiring (holder and A type socket assembly) is included on the cap side for single solenoid valves.
This simplifies the workflow when changing valves from a single solenoid to a double solenoid,
as you do not need to prepare the A type socket assembly separately.

Example of model No.

● Manifold model No. (example)

M **4GA1** **1** **0** **R** - **C6** - **T30** **W1** **H** - **10** - **3**

- A Model No.
- B Solenoid position
- C Port size
- D Reduced wiring connection
- E Terminal/connector pin array
- F Option
- G Station No.
- H Voltage

Code	Content
E **Terminal/connector pin array**	
W1	Double wiring (with single spare wiring)

* Refer to How to order for each series for details about model numbers.

Related products

● Silencer

● SLM-M5

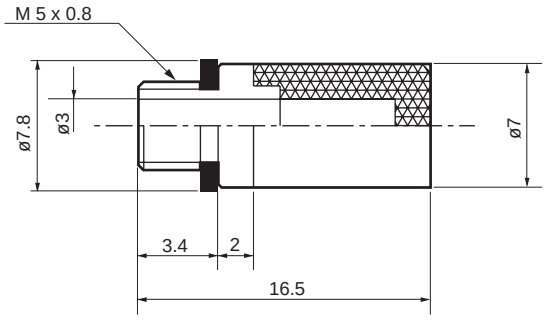

● SLW-6S, 8S

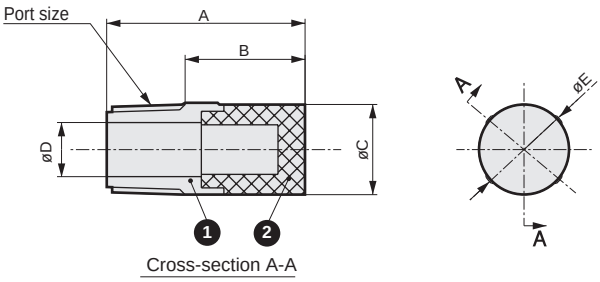

Model No.	Port size	A	B	C	D	E
SLW-6S	R 1/8	22	13.3	10.5	6	10.5
SLW-8S	R 1/4	28	19	14.8	9	15.4

● SLW-6A, 8A, 10A, 10L

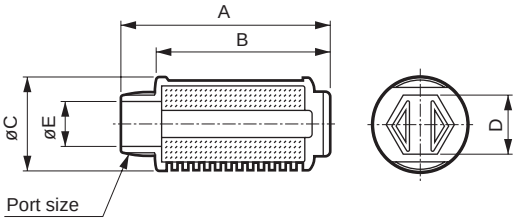

*1: Select the silencer mounting after confirming the dimensions.
*2: Use SLW-8S for the M4GA2 DIN rail mount. Interference occurs if SLW-8A is used.

Code / Model No.	Noise reduction effect dB (A)	Eff. X-sectional area mm²	A	B	C	D	E	Port size
SLW-6A	30 and over	10	34.5	28	16.5	10	7	R 1/8
SLW-8A	30 and over	20	44.5	36	20	13	8.5	R 1/4
SLW-10A	30 and over	30	58.5	48.5	25.5	17	12	R 3/8
SLW-10L	30 and over	60	68.2	58.4	28	19	12	R 3/8

● Blanking plug

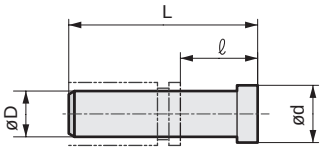

Model No.	D	L	ℓ	d
GWP 4-B	ø4	27	16	6
GWP 6-B	ø6	29	11.5	8
GWP 8-B	ø8	33	14	10
GWP 10-B	ø10	40	18.5	12

PG-P2-B (for ø1.8)

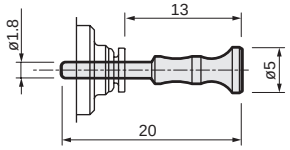

● Plug type

Part name	Model No.	For bore size	Appearance
Threaded plug	4G1R-M5P	M5	(FPL-M5)
	4G2R-06P	Rc1/8	Hexagon socket plug
	4G3R-08P	Rc1/4	
	4G3R-10P	Rc3/8	
	4G2R-06NP	NPT1/8	
	4G3R-08NP	NPT1/4	
	4G3R-10NP	NPT3/8	
	4G2R-06GP	G1/8	
	4G3R-08GP	G1/4	
	4G3R-10GP	G3/8	

● DIN rail

N4GR - BAA **L2**

Rail length

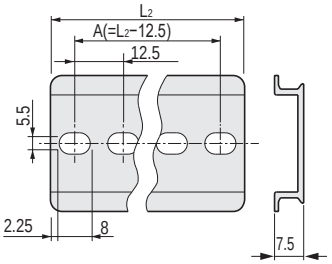

*1: Rail lengths not included in the list are made to order products.

L1:Manifold length		L2:Rail length	A: Mounting pitch
35	47.5 or less	87.5	75
Over 47.5	60 or less	100	87.5
60	72.5	112.5	100
72.5	85	125	112.5
85	97.5	137.5	125
97.5	110	150	137.5
110	122.5	162.5	150
122.5	135	175	162.5
135	147.5	187.5	175
147.5	160	200	187.5
160	172.5	212.5	200
172.5	185	225	212.5
185	197.5	237.5	225
197.5	210	250	237.5
210	222.5	262.5	250
222.5	235	275	262.5
235	247.5	287.5	275
247.5	260	300	287.5
260	272.5	312.5	300
272.5	285	325	312.5
285	297.5	337.5	325
297.5	310	350	337.5
310	322.5	362.5	350
322.5	335	375	362.5
335	347.5	387.5	375
347.5	360	400	387.5
360	372.5	412.5	400
372.5	385	425	412.5
385	397.5	437.5	425
397.5	410	450	437.5
410	422.5	462.5	450
422.5	435	475	462.5
435	447.5	487.5	475
447.5	460	500	487.5
460	472.5	512.5	500
472.5	485	525	512.5
485	497.5	537.5	525
497.5	510	550	537.5

If the length exceeds 510, calculate using a multiple of 12.5.

● Push-in fitting tube remover

For ø1.8/ø4 push-in fitting
4GR-EOT18-4

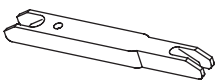

For ø4/ø6 push-in fitting
4GR-EOT4-6

Related parts

(1) Mounting plate (P) kit

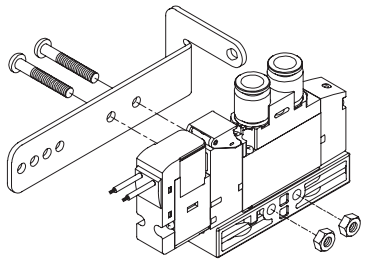

Mounting (P) kit

Model	Kit model No.	Set parts
3GA1/4GA1	4G1R-MOUNT-PLATE-KIT	Mounting plate, 2 set screws, 2 nuts
3GA2/4GA2	4G2R-MOUNT-PLATE-KIT	Mounting plate, 2 set screws
3GA3/4GA3	4G3R-MOUNT-PLATE-KIT	Mounting plate, 2 set screws

(2) Fitting stopper plate kit

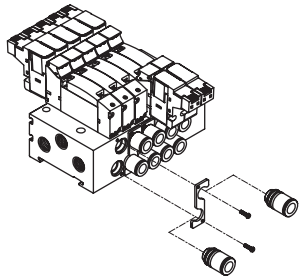

Fitting stopper plate kit

Model	Kit model No.
M4G1	4G1R-JNT-STP-PLATE-KIT-*1
M4G2	4G2R-JNT-STP-PLATE-KIT-*2
M4G3	4G3R-JNT-STP-PLATE-KIT

*1: Specify “C8” for C8 types.
*2: Specify “C10” for C10 types.

(3) Adapter related kits

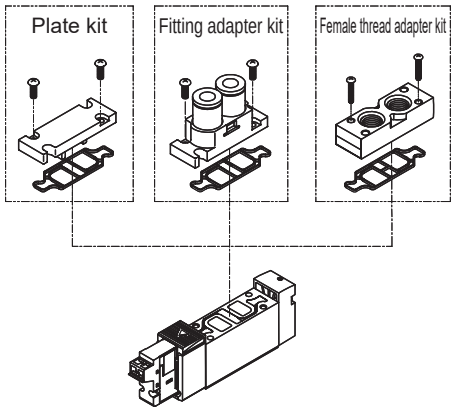

Plate kit

Model	Kit model No.	Set parts
3GB1/4GB1	4G1R-PLATE-KIT	Plate, gasket, 2 set screws
3GB2/4GB2	4G2R-PLATE-KIT	Plate, gasket, 2 set screws
4GB3	4G3R-PLATE-KIT	Plate, gasket, 2 set screws

Fitting adapter kit

4G1 R-JNT-ADAPTOR-KIT-C4 NC-F

Ⓐ Model No.
Ⓑ Port size
Ⓒ NC/NO
Ⓓ Option

		Ⓐ Model No.					
		3G1	3G2	3G3	4G1	4G2	4G3
Ⓑ Port size							
CF	ø1.8 barbed	●			●		
C18	ø1.8 straight	●			●		
C4	ø4 straight	●	●			●	
C6	ø6 straight	●	●	●		●	●
C8	ø8 straight		●	●		●	●
C10	ø10 straight			●			●
C3N	ø1/8” straight	●			●		
C4N	ø5/32” straight	●			●		
C6N	ø1/4” straight		●			●	
C8N	ø5/16” straight		●	●		●	●
C10N	ø3/8” straight			●			●
Ⓒ NC/NO							
NC	For 3GA□10	●	●	●			
N0	For 3GA□110	●	●	●			
Blank	Other than 3GA□10 or 3GA□110	●	●		●	●	●
Ⓓ Option							
Blank		●	●	●	●	●	●
F	A/B-port filter built in	●	●	●	●	●	●

Note: Fitting adaptor (with fitting), gasket and set screws (2 pieces) are in a set.

Female thread adapter kit

Model	Kit model No.	Set parts
3GA1/4GA1	4G1R-FML-ADAPTOR-KIT-bore size-option	Female thread adapter, gasket, 2 set screws
3GA2/4GA2	4G2R-FML-ADAPTOR-KIT-bore size-option	Female thread adapter, gasket, 2 set screws
3GA3/4GA3	4G3R-FML-ADAPTOR-KIT-bore size-option	Female thread adapter, gasket, 2 set screws, 2 body set screws

Specify the option “F” when using the A/B port filter integrated.

Related parts

(4) Manifold related parts

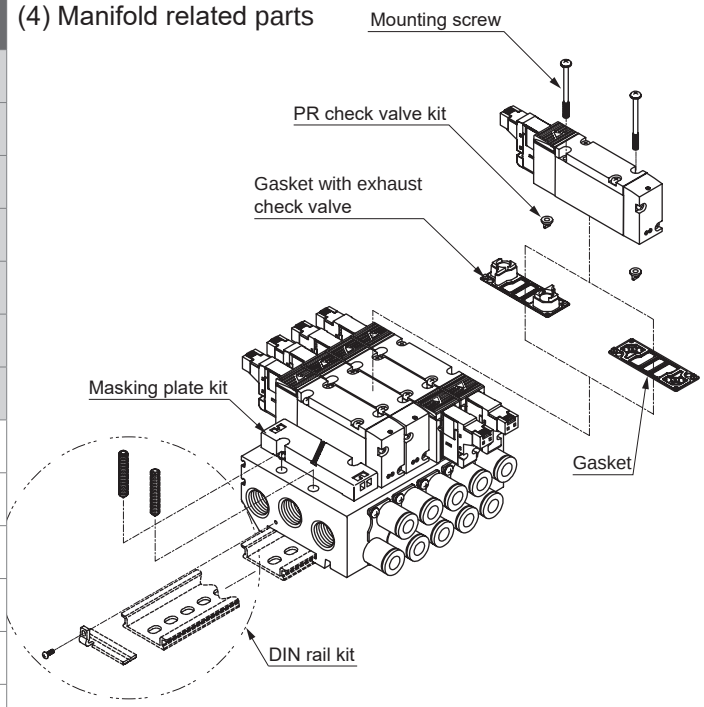

Masking plate kit

Model	Model No.	Content	Remarks
M3G1/M4G1	4G1R-MP	Masking plate Gasket 2 mounting screws	* 4G3R-MP has two PR check valves included.
M3G2/M4G2	4G2R-MP		
M3G3/M4G3	4G3R-MP		

Gasket

Model	Part model No.
3G1/4G1	4G1R-GASKET
3G1/4G1 (For masking plate)	4G1R-MP-GASKET
3G2/4G2	4G2R-GASKET
3G2/4G2 (For masking plate)	4G2R-MP-GASKET
3G3/4G3	4G3R-GASKET

Gasket with exhaust check valve

Model	Part model No.
3G1/4G1	4G1R-CHECK-VALVE
3G2/4G2	4G2R-CHECK-VALVE
3G3/4G3	4G3R-CHECK-VALVE

PR check valve kit (2 per set)

Model	Kit model No.
3G1/4G1	4G1R-PR
3G2/4G2	4G2R-PR
3G3/4G3	4G3R-PR

Mounting screw (10 per set)

Model	Part model No.
3G1/4G1	4G1R-SET-SCREW
3G2/4G2	4G2R-SET-SCREW
3G3/4G3	4G3R-SET-SCREW
3GA3/4GA3 (for 08 bore size)	4G3R-SET-SCREW-L

DIN rail kit

Model	Model No.	Content
M4G1	4GA1R-BAA [length] - [option] D	DIN rail, 2 set screws, 2 lock nuts
	4GB1R-BAA [length] - [option] D	
M4G2	4GA2R-BAA [length] - [option] D	DIN rail/2 holders, 2 tapping screws, 4 set screws
	4GB2R-BAA [length] - [option] D	
M4G3	4GA3R-BAA [length] - [option] D	
	4GB3R-BAA [length] - [option] D	

Specify the length "0" when the DIN rail is not required.
Specify the [option] "K" when using with the manifold base for external pilot.

Set the DIN rail length, referring to the working manifold dimensions and DIN rail length quick reference list (page 308).

Related parts

(5) Sub-plate

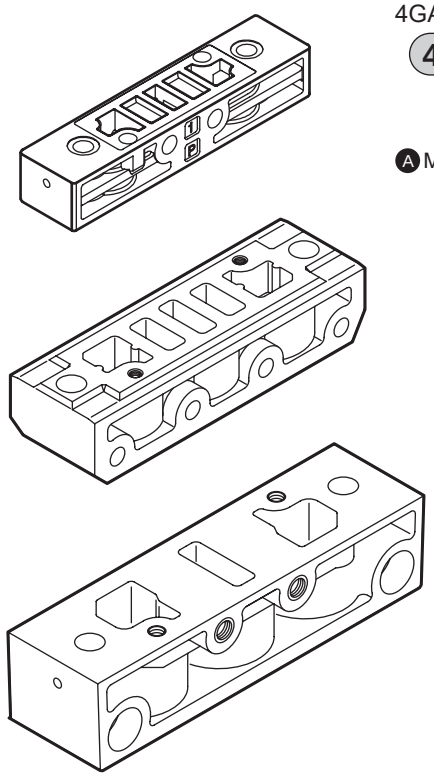

4GA Piping adapter

4G1 R - ADAPTOR - M5 - ○

Ⓐ Model No.

Ⓑ Port size

Ⓒ Option

Ⓐ Model No.	4G1	4G2	4G3
Ⓑ Port size (P/R1/R2 port)			
M5 M5	●		
06 Rc1/8		●	
08 Rc1/4			●
06N NPT1/8		●	
08N NPT1/4			○
06G G1/8		●	
Ⓒ Option			
P With mounting plate (attachment)	●	●	●

is not available.

○ indicates a custom order.

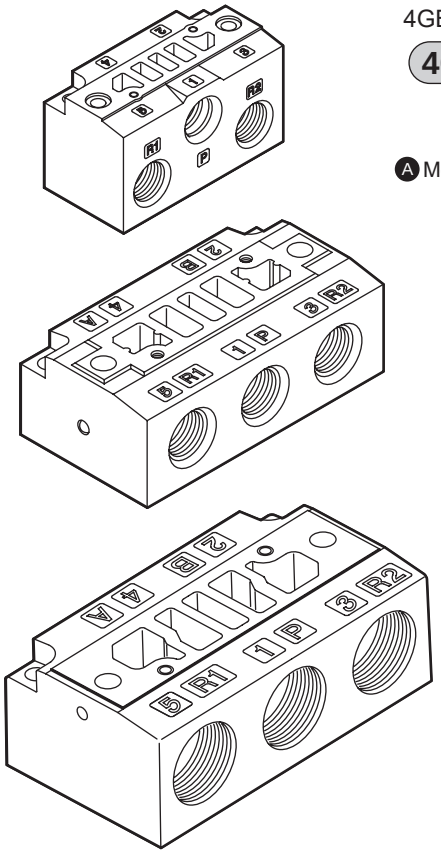

4GB single sub-plate

4G1 R - SUB - BASE - 06 - ○

Ⓐ Model No.

Ⓑ Port size

Ⓒ Option

Ⓐ Model No.	4G1	4G2	4G3
Ⓑ Port size (A/B/P/R1/R2 port)			
06 Rc1/8	●		
08 Rc1/4		●	●
10 Rc3/8			●
06N NPT1/8	○		
08N NPT1/4		○	○
10N NPT3/8			○
06G G1/8	○		
08G G1/4		○	
Ⓒ Option			
K External pilot	●	●	●
F A/B port filter built in *1	●	●	●

*1: A filter is built into the P port as standard.

is not available.

○ indicates a custom order.

Related parts

(6) Manifold sub-plate kit individual wiring

● M4GA Sub-plate

M4GA1R-00-□-2

- Ⓐ Model No.
- Ⓑ Port size (*1)
- Ⓒ Option
- Ⓓ Station No.

Code	Description
Ⓐ Model No.	
M4GA1	Metal base, 4G1 size, body piping
M4GA2	Metal base, 4G2 size, body piping
M4GA3	Metal base, 4G3 size, body piping
Ⓑ Port size	
00	Rc thread
00N	NPT thread
00G	G thread
Ⓒ Option	
Blank	
K	External pilot
Ⓓ Station No.	
2	2 stations
to	to
20	Refer to the specifications page for the max. station number.

*1: This is P/R1/R2 port size.

● M4GB1 Sub-plate

M4GB1R-CL4-□-D-2

- Ⓐ Port size
- Ⓑ Option
- Ⓒ Mount
- Ⓓ Station No.

Code	Description		
Ⓐ Port size			
Port	**4(A), 2(B) port**		**P/R1/R2 port**
CF	ø1.8 barbed fitting (compatible tube UP-9102-**)		Rc1/8
C18	ø1.8 push-in fitting (compatible tube UP-9402-**)		
C4	ø4 push-in fitting		
C6	ø6 push-in fitting		
C8	ø8 push-in fitting	(*1)	
CL18	ø1.8 push-in L-fitting upward (compatible tube UP-9402-**)		
CL4	ø4 push-in L-fitting (upward)		
CL6	ø6 push-in L-fitting (upward)		
CD18	ø1.8 push-in L-fitting downward (compatible tube UP-9402-**)		
CD4	ø4 push-in L-fitting (downward)		
CD6	ø6 push-in L-fitting (downward)		
M5	M5		
Port	**4(A), 2(B) port**		**P/R1/R2 port**
C3N	ø1/8” push-in fitting		NPT1/8
C4N	ø5/32” push-in fitting		
CL3N	ø1/8” push-in L-fitting (upward)	(*1)	
CL4N	ø5/32” push-in L-fitting (upward)	(*1)	
M5N	M5		
Port	**4(A), 2(B) port**		**P/R1/R2 port**
C4G	ø4 push-in fitting		G1/8
C6G	ø6 push-in fitting		
CL4G	ø4 push-in L-fitting (upward)	(*1)	
CL6G	ø6 push-in L-fitting (upward)	(*1)	
M5G	M5		
Ⓑ Option			
Blank			
K	External pilot		
F	A/B port filter built in	(*2)	
Ⓒ Mount			
Blank	Direct mount		
D	DIN rail mount (*3)		
Ⓓ Station No.			
2	2 stations		
to	to		
20	Refer to the specifications page for the max. station number.		

*1: Available as custom order.
*2: A filter is built into the P-port as standard.
*3: The DIN rail kit needs to be prepared separately.

Related parts

(6) Manifold sub-plate kit individual wiring

● M4GB2/M4GB3 Sub-plate

M4GB2 R - CL4 - ( ) - 2

Ⓑ Port size
Ⓒ Option
Ⓓ Station No.

Code	Description	Ⓐ Model No. M4GB2	Ⓐ Model No. M4GB3
Ⓑ Port size			
Port	**4(A), 2(B) port**	**P/R1/R2 port (1) = Rc 1/4 (2) = Rc 3/8**	
C4	ø4 push-in fitting	(1)	
C6	ø6 push-in fitting	(1)	(2)
C8	ø8 push-in fitting	(1)	(2)
C10	ø10 push-in fitting (*1)	(1)	(2)
CL6	ø6 push-in L-fitting (upward)	(1)	
CL8	ø8 push-in L-fitting (upward)	(1)	(2)
CL10	ø10 push-in L-fitting (upward)		(2)
CD6	ø6 push-in L-fitting (downward)	(1)	
CD8	ø8 push-in L-fitting (downward)	(1)	(2)
CD10	ø10 push-in L-fitting (downward)		(2)
06	Rc1/8	(1)	
08	Rc1/4		(2)
Port	**4(A), 2(B) port**	**P/R1/R2 port (3) = NPT1/4, (4) = NPT3/8**	
C6N	ø1/4” push-in fitting	(3)	
C8N	ø5/16” push-in fitting	(3)	(4)
C10N	ø3/8” push-in fitting		(4)
CL6N	ø1/4” push-in L-fitting (upward) (*1)	(3)	
CL8N	ø5/16” push-in L-fitting (upward) (*1)	(3)	
06N	NPT1/8	(3)	
08N	NPT1/4 (*1)		(4)
Port	**4(A), 2(B) port**	**P/R1/R2 port (5) = G1/4**	
C4G	ø4 push-in fitting	(5)	
C6G	ø6 push-in fitting	(5)	
C8G	ø8 push-in fitting	(5)	
CL6G	ø6 push-in L-fitting (upward) (*1)	(5)	
CL8G	ø8 push-in L-fitting (upward) (*1)	(5)	
06G	G1/8	(5)	

Ⓒ Option	
Blank	
K	External pilot
F	A/B port filter built in (*2)

Ⓓ Station No.	
2	2 stations
to	to
20	Refer to the specifications page for the max. station number.

*1: Available as custom order.
*2: A filter is built into the P port as standard.
*3: Direct mount/DIN rail mount are common.
*4: The DIN rail kit needs to be prepared separately.

Related parts

(7) Manifold sub-plate kit reduced wiring

● M4GA Sub-plate

M4GA1 R - 00 - ( ) - ( ) ( ) - 2

Ⓐ Model No.
Ⓑ Port size
Ⓒ Reduced wiring connection
Ⓓ Option
Ⓔ Mount
Ⓕ Station No.

Code	Description	
Ⓐ Model No.		
M4GA1	Metal base, 4G1 size, body piping	
M4GA2	Metal base, 4G2 size, body piping	
M4GA3	Metal base, 4G3 size, body piping	
Ⓑ Port size		
00	M5/Rc	
00N	NPT	
00G	G thread	
Ⓒ Reduced wiring connection		
T10	Common terminal block (M3 thread)	Left-side spec
T10R		Right-side spec
T11	Common terminal block (clamping)	Left-side spec
T11R		Right-side spec
T30	D sub-connector	Left-side spec
T30R		Right-side spec
T50	20-pin flat cable connector (with power supply terminal)	Left-side spec
T50R		Right-side spec
T51	20-pin flat cable connector (without power supply terminal)	Left-side spec
T51R		Right-side spec
T52	10-pin flat cable connector (without power supply terminal)	Left-side spec
T52R		Right-side spec
T53	26-pin flat cable connector (without power supply terminal)	Left-side spec
T53R		Right-side spec
T56	20-pin flat cable connector (without power supply terminal) For serial transmission OPP3 device unit	Left-side spec
T81	For serial transmission device unit OPP7 connection 16 points	Left-side spec
T82	For serial transmission device unit OPP7 connection 32 points	Left-side spec
Ⓓ Option		
Blank		
K	External pilot	
Ⓔ Mount		***1**
Blank	Direct mount	
D	DIN rail mount	*2
Ⓕ Station No.		
2	2 stations	
to	to	
20	Refer to the specifications page for the max. station number.	

1: For T8, select one mounting.
The only alternative to T8* is blank.
*2: The DIN rail kit must be prepared separately.

Related parts

(7) Manifold sub-plate kit reduced wiring

● M4GB sub-plate

M4GB1 R - CL4 - T10 - ○ ○ - 2

Ⓐ Model No. Ⓑ Port size

Code	Description	Ⓐ Model No. M4GB1	M4GB2	M4GB3
Ⓐ Model No.				
M4GB1	Metal base 4G1 size base piping			
M4GB2	Metal base 4G2 size base piping			
M4GB3	Metal base 4G3 size base piping			
Ⓑ Port size		Port P/R1/R2 (1) = Rc1/8 (2) = Rc1/4 (3) = Rc3/8		
Port	**4(A), 2(B) port**			
CF	ø1.8 barbed fitting (compatible tube UP-9102-**)	(1)		
C18	ø1.8 push-in fitting (compatible tube UP-9402-**)	(1)		
C4	ø4 push-in fitting	(1)	(2)	
C6	ø6 push-in fitting	(1)	(2)	(3)
C8	ø8 push-in fitting *5, *6	(1)	(2)	(3)
C10	ø10 push-in fitting *5, *6		(2)	(3)
CL18	ø1.8 push-in L-fitting upward (compatible tube UP-9402-**)	(1)		
CL4	ø4 push-in L-fitting (upward)	(1)		
CL6	ø6 push-in L-fitting (upward)	(1)	(2)	
CL8	ø8 push-in L-fitting (upward)		(2)	(3)
CL10	ø10 push-in L-fitting (upward)			(3)
CD18	ø1.8 push-in L-fitting downward (compatible tube UP-9402-**)	(1)		
CD4	ø4 push-in L-fitting (downward)	(1)		
CD6	ø6 push-in L-fitting (downward)	(1)	(2)	
CD8	ø8 push-in L-fitting (downward)		(2)	(3)
CD10	ø10 push-in L-fitting (downward)			(3)
M5	M5	(1)		
06	Rc1/8		(2)	
08	Rc1/4			(3)
Port	**4(A), 2(B) port**	Port P/R1/R2 (4) NPT = 1/8 (5) NPT = 1/4 (6) NPT = 3/8		
C3N	ø1/8" push-in fitting	(4)		
C4N	ø5/32" push-in fitting	(4)		
C6N	ø1/4" push-in fitting		(5)	
C8N	ø5/16" push-in fitting		(5)	(6)
C10N	ø3/8" push-in fitting			(6)
CL3N	ø1/8" push-in L-fitting upward *6	(4)		
CL4N	ø5/32" push-in L-fitting upward *6	(4)		
CL6N	ø1/4" push-in L-fitting upward *6		(5)	
CL8N	ø5/16" push-in L-fitting upward *6		(5)	
CXN	Push-in fitting mix	(4)	(5)	(6)
M5N	M5	(4)		
06N	NPT1/8		(5)	
08N	NPT1/4 *6			(6)
Port	**4(A), 2(B) port**	Port P/R1/R2 (7) = G1/8 (8) = G1/4		
C4G	ø4 push-in fitting	(7)	(8)	
C6G	ø6 push-in fitting	(7)	(8)	
C8G	ø8 push-in fitting		(8)	
CL4G	ø4 push-in L-fitting upward *6	(7)		
CL6G	ø6 push-in L-fitting upward *6	(7)	(8)	
CL8G	ø8 push-in L-fitting upward *6		(8)	
CXG	Push-in fitting mix	(7)	(8)	
M5G	M5	(7)		
06G	G1/8		(8)	
00	Discrete valve for integrated base	●	●	●

Ⓒ Reduced wiring connection

Ⓒ Reduced wiring connection		
T10	Common terminal block (M3 thread)	Left-sided specifications
T10R		Right-sided specifications
T11	Common terminal block (clamping)	Left-sided specifications
T11R		Right-sided specifications
T30	D-sub-connector	Left-sided specifications
T30R		Right-sided specifications
T50	20-pin flat cable connector (with common power supply terminal)	Left-sided specifications
T50R		Right-sided specifications
T51	20-pin flat cable connector (no power supply terminal)	Left-sided specifications
T51R		Right-sided specifications
T52	10-pin flat cable connector (no power supply terminal)	Left-sided specifications
T52R		Right-sided specifications
T53	26-pin flat cable connector (no power supply terminal)	Left-sided specifications
T53R		Right-sided specifications
T56	20-pin flat cable connector (without power supply terminal) For serial transmission device unit OPP3 connection	Left-sided specifications
T81	For serial transmission device (adapter) station OPP7 connection (16-point output)	Left-sided specifications
T82	For serial transmission device (adapter) station OPP7 connection (32-point output)	Left-sided specifications

Ⓓ Option

Ⓓ Option	
Blank	No option
K	External pilot
F	Port A/B filter integrated *1

Ⓔ Mount type

Ⓔ Mount	*2
Blank	Direct mount
D	DIN rail mount *3

Ⓕ Station No.

Ⓕ Station No.	
2	2 stations
to	to
20	Refer to the specifications page for the max. station number.

*1: A filter is built into port P as standard.
2: For T8, select one mounting.
The only alternative to T8* is blank.
*3: The DIN rail kit must be prepared separately.

Related parts

(8) Coil assembly

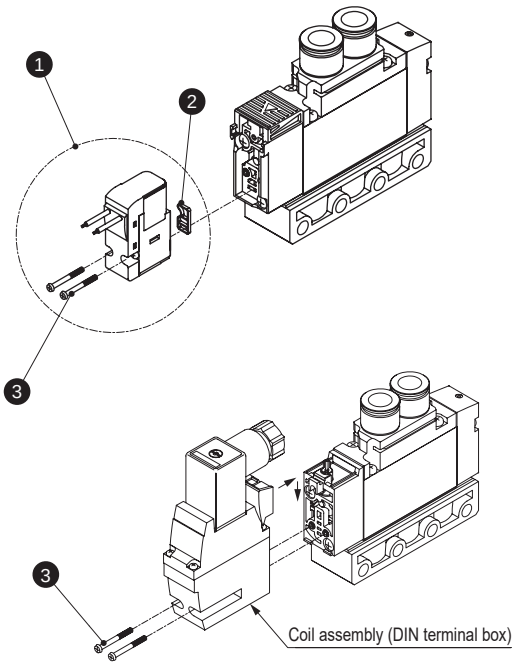

Coil assembly

No.	Part name	Model No.
1	Coil assembly	4GR - electrical connections - □ - COIL - voltage Blank: Standard A: Ozone proof S: Surgeless *1 E: Low exoergic/energy circuit *1, *2 K: External pilot specifications E* : E-connector E*J : Socket with cover B* : DIN terminal box Blank: Grommet lead wire B includes the DIN terminal box

1: E2 type and E2*J type connectors support 12/24 VDC only. In addition, surgeless “S” and low exoergic/energy circuit “E” cannot be selected together.
*2: Surgeless specifications.

Coil parts

No.	Part name	Part model No.
2	Coil gasket	4GR-COIL-GASKET
3	Mounting screw	4GR-COIL-SET-SCREW

Note) There is no compatibility between the DIN terminal box and other coil assemblies.

(9) Lead wire related parts

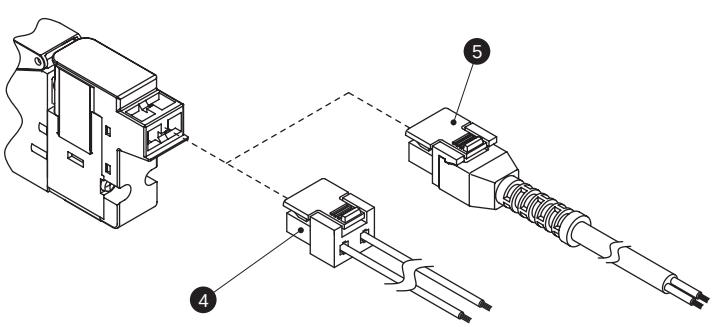

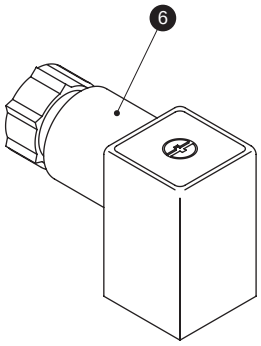

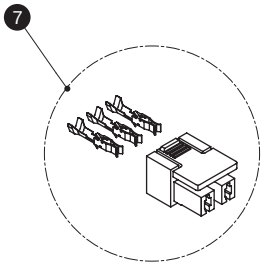

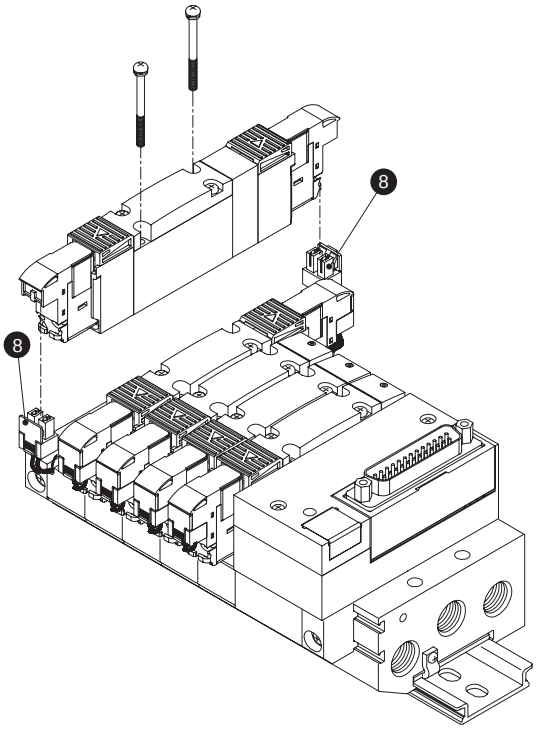

Socket assembly, DIN terminal box assembly

No.	Part name	Model No.
4	E-connector socket assembly	4GR-SOCKET-ASSY-E**- Voltage
5	Socket assembly with cover	4GR-SOCKET-ASSY-E**J
6	DIN terminal box assembly	4GR-TERMINAL-BOX- Voltage

Socket set

No.	Part model No.
7	4GR-SOCKET-SET

A-connector socket assembly

No.	Part model No.
8	4G[*1]R-SOCKET-ASSY-A[*2][*3]-[*4]

*1 Series flow rate size
*2 Blank: Left side, R: Right side
*3 A: aSOL side, B: bSOL side
*4 Row No.
Note: Refer to “Selection of model No. of socket assembly for expansion” (page 837) for selection.

MEMO

M4GA1 to 3/M4GB1 to 3 Series

4GA/B
M4GA/B
MN4GA/B
4GA/B (master)
4GB With sensor
4GD/E
M4GD/E
MN4GD/E
4GA4/B4
MN3E MN4E
W4GA/B2
W4GB4
MN3S0 MN4S0
4SA/B0
4KA/B
4KA/B (master)
4F
4F (master)
PV5G GMF
PV5 GMF
PV5S-0
3Q
MV3QR
3MA/B0
3PA/B
P/M/B
NP/NAP NVP
4G*0EJ
4F*0EX
4F*0E
HMV HSV
2QV 3QV
SKH
Silencer
TotAirSys (Total Air)
TotAirSys (Gamma)
Ending

How to fill out metal base M4G series manifold specifications sheet

● Manifold model No. (example)

M 4 G A/B 1 8 0R- CX - T30 - 9 - 3

Type of solenoid valve | Solenoid position | Port size | Electrical connections | Terminal connector pin array | Station No. | Voltage

Solenoid valve model No.	Fitting CX A	Fitting CX B	1	2	3	4	5	6	7	8	9	10	11	12	13	14	15	16	17	18	19	20	21	22	23	24	Quantity
4G B 1 1 9R- CX	C6	X	○	○																							2
4G B 1 1 9R- C6					○	○																					2
4G B 1 2 9R- C6							○	○																			2
4G B 1 5 9R- CX	C6	C4							○	○																	2
4G 1 9R-																											
3G A 1 9R-																											
3G A 1 9R-																											
Masking plate 4G1R-MP(S)																											
Masking plate 4G1R-MP(D)											○																1

Indicate X for a plug

Fill in "CX" when changing the fitting combination

Mounting rail	L2= * Write an integer multiple of 12.5.	Accessory	Blanking plug		Thread plug		Silencer	
			PG-P2-B	GWP4-B	4G1R-M5P		SLW-6S	SLW-6A
			GWP6-B	GWP8-B				
			Cable with D sub-connector	4GR-CABLE-D0□-□		Push-in fitting tube remover (attached as standard) □/Not required (check the box)		

Place a check here if the tube remover (standard attached product) is not required.

M4GB1*OR-C8 does not come with a removal tool.

* A reference circuit diagram for the above manifold (example) is shown on the next page.

From the manifold specifications sheets for each model, select and fill out the appropriate form.

● Individual wiring...M4G1 A/B (page 210), M4G2 A/B (page 211), M4G3 A/B (page 212)

● Reduced wiring
- Common terminal block (T1*), D sub-connector (T30): M4G1 A/B (page 213), M4G2 A/B (page 214), M4G3 A/B (page 215)
- Flat cable connector (T5*) : M4G1 A/B (page 216), M4G2 A/B (page 217), M4G3 A/B (page 218)
- Serial transmission (T6G1) : M4G1 A/B (page 219), M4G2 A/B (page 220), M4G3 A/B (page 221)
- Serial transmission (T8*) : M4G1 A/B (page 222), M4G2 A/B (page 223), M4G3 A/B (page 224)

*1: Select the silencer mounting after confirming the dimensions.
*2: Use SLW-8S for the M4GA2 DIN rail mount. Interference occurs if SLW-8A is used.

Precautions for fitting mix CX

The A/B port fitting can be selected freely by indicating "CX" in the port size area.

Selectable cartridge fittings	
4G1	CF, C18, C4, C6, C8, X (plug)
4G2	C4, C6, C8, C10, X (plug)
4G3	C6, C8, C10, X (plug)

* A/B port fitting mix with the body piping is not supported. 4G1 C8 and 4G2 C10 base piping are custom orders. Fitting mix CX supports only the combinations of C8 and X (plug) for 4G1 and C10 and X (plug) for 4G2.

How to use base piping M4GB*10 as a 3-port valve

This can be used as the NO/NC by attaching a plug cartridge on one side of the A/B port.
Indicate "X" in the fitting CX column.

Switching method	Plug mounting port
NC (Normally closed)	B
NO (Normally open)	A

For female thread specifications, indicate the required number of plugs in the "Thread plug" area at the end. Female threads and cartridge fitting cannot be used together in one manifold set.

Elbow specifications

●The push-in L fitting (upward) is used only for the single solenoid manifold.
Port A is a long elbow and port B a short elbow.
●A/B port sizes do not differ for elbow specifications.

How to fill out wiring specifications sheet

Not required for standard wiring and double wiring.

● Wiring specifications sheet (example)

Complete these specifications when specifying the wiring order and additional cables.

Connector pin No.		Installation position															
T30/T30R	T50/T50R/T6*	1	2	3	4	5	6	7	8	9	10	11	12	13	14	15	16	17
1	1	a																
14	2		a															
2	3			a														
15	4																	
3	5				a													
16	6																	
4	7					a												
17	8					b												
5	9 - Power supply						a											
18	10 + (COM) Power supply						b											
6	11							a										
19	12							b										
7	13								a									
20	14								b									
8	15									(a)								
21	16									(b)								
9	17																	
22	18																	
10	19 - Power supply																	
23	20 + (COM) Power supply																	
11																		
24																		
12																		
25																		
13 (COM)																		

Spare cable wiring Precautions (1)

* Note that when T50 wiring is used, the COM polarity is + (plus).
* When T50 wiring is used, connector pin numbers 9, 10, 19, and 20 cannot be specified, because they are used for the external input power supply.
* Wiring is sequential from connector pin No. 1 in standard wiring. Contact CKD for special wiring order.

Precautions regarding spare wiring

(1) Spare wires are provided on the masking plate for the reduced wiring manifold. (Refer to page 197)
The number of wires for spare wiring can be specified by selecting the masking plate within the specifications sheet.
4G *R -MP(S) ... 1 piece
4G *R -MP(D) ... 2 pieces
Indicate (a) or (b) in manifold specifications sheet for masking plate reserved wires.

Reference circuit diagram The simplified circuit diagram of the manifold model No. (example) on the previous page is shown below.

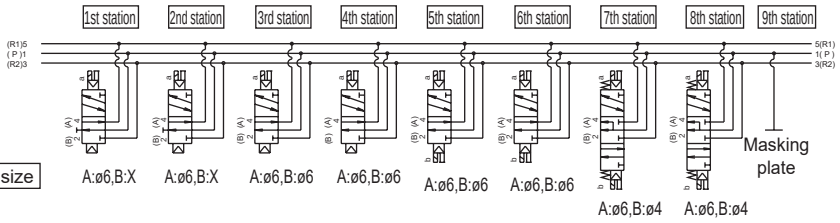

* The manifold station numbers are set in order from the left with the piping port facing forward.

M4G1 Individual Cabling

M4G$^{A}_{B}$1 manifold specification

Issued / /

Company

Contact

Order No.

● Responsible ● quantity set ● Delivery date

Voucher No.	Order No.

● manifold model number

M ☐ G $^{A}_{B}$1 ☐ 0R- ☐ - ☐ ☐ ☐ - ☐ - ☐

Solenoid valve | switching location classification | connection aperture | wire connection | Other Options | Mount Type | series | Voltage

solenoid valve model number	Joint CX A	Joint CX B	valve installation position 1	2	3	4	5	6	7	8	9	10	11	12	13	14	15	16	17	18	19	20	21	22	23	24	number of uses
4G ☐ 1 ☐ 9R- ☐ - ☐																											
4G ☐ 1 ☐ 9R- ☐ - ☐																											
4G ☐ 1 ☐ 9R- ☐ - ☐																											
4G ☐ 1 ☐ 9R- ☐ - ☐																											
4G ☐ 1 ☐ 9R- ☐ - ☐																											
3G ☐ 1 ☐ 9R- ☐ - ☐																											
3G ☐ 1 ☐ 9R- ☐ - ☐																											
MASKING PLATE **4G1R-MP-** ☐																											
AIR SUPPLY SPACER **4G1R-P-** ☐																											
INSTEP VALVE SPACER **4G1R-IS**																											
exhaust spacer **4G1R-R-** ☐																											
PILOT CHECK VALVE SPACER **4G1R-PC-** ☐																											

mounting rail	attachment parts	blank plug				screw plug		Silencer			
L_2= ☐ *Enter a value that is an integer multiple of 12.5.		PG-P2-B	☐	GWP4-B	☐	4G1R-M5P	☐	SLW-6S	☐	SLW-6A	☐
		GWP6-B	☐	GWP8-B	☐						
		Push-in fitting tube remover (attached as standard) ☐ Not required (check the box)									

*M4GB1 C8 does not have a tube stripper.

M4G2 individual wiring

M4G2 A/B Manifold specifications sheet

Issued / /

Company

Contact

Order No.

● Contact ● Quantity set(s) ● Delivery date /

Slip No.	Order No.

● Manifold model No.

M □ G A/B 2 □ 0R- □ - □ □ □ - □ - □

Solenoid valve / Solenoid position / Port size / Electrical connections / Other options / Mount / Station No. / Voltage

Solenoid valve model No.	Fitting CX		Valve installation position																						Quantity
	A	B	1	2	3	4	5	6	7	8	9	10	11	12	13	14	15	16	17	18	19	20	21	22	23	24	
4G□2□9R-□-□																											
4G□2□9R-□-□																											
4G□2□9R-□-□																											
4G□2□9R-□-□																											
4G□2□9R-□-□																											
3G□2□9R-□-□																											
3G□2□9R-□-□																											
Masking plate **4G2R-MP-□**																											
Air supply spacer **4G2R-P-□**																											
In-stop valve spacer **4G2R-IS**																											
Exhaust spacer **4G2R-R**																											
Pilot check valve spacer **4G2R-PC□**																											

Mounting rail: L_2= □ (* Write an integer multiple of 12.5.)

Accessory:

Blanking plug				Thread plug		Silencer			
GWP4-B	□	**GWP6-B**	□	**4G2R-06P**	□	**SLW-8S**	□	**SLW-8A**	□
GWP8-B	□	**GWP10-B**	□						

* Can only be selected for B types.

M4G3 individual wiring

M4G3 $^{A}_{B}$ Manifold specifications sheet

Issued / /

Company

Contact

Order No.

● Contact ● Quantity set(s) ● Delivery date /

Slip No.	Order No.

● Manifold model No.

M ☐ **G** $^{A}_{B}$ **3** ☐ **0R-** ☐ **-** ☐ ☐ ☐ **-** ☐ **-** ☐

Solenoid valve | Solenoid position | Port size | Electrical connections | Other options | Mount | Station No. | Voltage

Solenoid valve model No.	Fitting CX		Valve installation position																							Quantity
	A	B	1	2	3	4	5	6	7	8	9	10	11	12	13	14	15	16	17	18	19	20	21	22	23	24	
4G ☐ 3 ☐ 9R- ☐																											
4G ☐ 3 ☐ 9R- ☐																											
4G ☐ 3 ☐ 9R- ☐																											
4G ☐ 3 ☐ 9R- ☐																											
4G ☐ 3 ☐ 9R- ☐																											
3GA3 ☐ 9R- ☐																											
3GA3 ☐ 9R- ☐																											
Masking plate 4G3R-MP- ☐																											
Air supply spacer 4G3R-P- ☐																											
In-stop valve spacer 4G3R-IS																											
Exhaust spacer 4G3R-R- ☐																											

Mounting rail	L_2= ☐ * Write an integer multiple of 12.5.	Accessory	Blanking plug						Thread plug		Silencer			
			GWP6-B	☐	GWP8-B	☐	GWP10-B	☐	4G3R-08P	☐	SLW-10A	☐	SLW-10L	☐

M4G1 Wire Saving

M4G $^{A}_{B}$1-T1, 3 Manifold specification

Issued / /

Company

Contact

Order No.

● Responsible ● quantity set ● Delivery date

Voucher No.	Order No.

● manifold model number

M ☐ G $^{A}_{B}$1 ☐ 0R- ☐ - ☐ ☐ ☐ ☐ - ☐ - ☐

solenoid valve | switching location classification | connection aperture | Wire Saving Connection | terminal connector pin array system | Optional | Mount | series | Voltage

solenoid valve model number	Joint CX A	Joint CX B	valve installation position 1	2	3	4	5	6	7	8	9	10	11	12	13	14	15	16	17	18	19	20	21	22	23	24	number of uses
4G ☐ 1 ☐ 9R ☐ - ☐																											
4G ☐ 1 ☐ 9R- ☐ - ☐																											
4G ☐ 1 ☐ 9R- ☐ - ☐																											
4G ☐ 1 ☐ 9R- ☐ - ☐																											
4G ☐ 1 ☐ 9R- ☐ - ☐																											
3G ☐ 1 ☐ 9R- ☐ - ☐																											
3G ☐ 1 ☐ 9R- ☐ - ☐																											
MASKING PLATE 4G1R-MP(S)- ☐																											
MASKING PLATE 4G1R-MP(D)- ☐																											
AIR SUPPLY SPACER 4G1R-P- ☐																											
INSTEP VALVE SPACER 4G1R-IS																											
exhaust spacer 4G1R-R- ☐																											
PILOT CHECK VALVE SPACER 4G1R-PC- ☐																											

mounting rail: L_2= ☐ *Enter a value that is an integer multiple of 12.5.

Attached Parts:

blank plug					screw plug		Silencer			
PG-P2-B		GWP4-B			4G1R-M5P		SLW-6S		SLW-6A	
GWP6-B		GWP8-B								
CABLE WITH D SUB CONNECTOR	4GR-CABLE-D0 ☐ - ☐				Push-in fitting tube remover (attached as standard) ☐ Not required (check the box)					

*M4GB C8 does not have a tube stripper.

● Wiring specifications (not required for standard or double wiring). Specify the wiring sequence and the additional cables.)

Connector Pin NO. T10/T10R	T11/T11R	T30/T30R	installation location 1	2	3	4	5	6	7	8	9	10	11	12	13	14	15	16	17	18	19	20	21	22	23	24
1	1	1																								
2	2	14																								
3	3	2																								
4	4	15																								
5	5	3																								
6	6	16																								
7	7	4																								
8	8	17																								
9	9	5																								
10	10	18																								
11	11	6																								
12	12	19																								
13	13	7																								
14	14	20																								
15	15	8																								
16	16	21																								
COM	17	9																								
COM	18	22																								
	19	10																								
	20	23																								
	21	11																								
	22	24																								
	23	12																								
	24	25																								
	COM	13 (COM)																								
	COM																									

M4G2 reduced wiring

M4G$^{A}_{B}$2-T1/3 Manifold specifications sheet

Issued / /

Company

Contact

Order No.

● Contact ● Quantity set(s) ● Delivery date /

Slip No.	Order No.

● Manifold model No.

M □ G$^{A}_{B}$2 □ 0R- □ - □ □ □ □ - □ - □

Solenoid valve | Solenoid position | Port size | Reduced wiring connection | Terminal connector pin array | Option | Mount | Station No. | Voltage

Solenoid valve model No.	Fitting CX		Valve installation position																							Quantity
	A	B	1	2	3	4	5	6	7	8	9	10	11	12	13	14	15	16	17	18	19	20	21	22	23	24	
4G□2□9R-□-□																											
4G□2□9R-□-□																											
4G□2□9R-□-□																											
4G□2□9R-□-□																											
4G□2□9R-□-□																											
3G□2□9R-□-□																											
3G□2□9R-□-□																											
Masking plate **4G2R-MP(S)-**																											
Masking plate **4G2R-MP(D)-**																											
Air supply spacer **4G2R-P-**																											
In-stop valve spacer **4G2R-IS**																											
Exhaust spacer **4G2R-R-**																											
Pilot check valve spacer **4G2R-PC□**																											

Mounting rail: L_2= □ * Write an integer multiple of 12.5.

Accessory:

Blanking plug				Thread plug		Silencer			
GWP4-B		**GWP6-B**		**4G2R-06P**		**SLW-8S**		**SLW-8A**	
GWP8-B		**GWP10-B**							
Cable with D sub-connector	4GR-CABLE-D0□-□								

* Can only be selected for B types.

● Wiring specifications sheet (Not required for standard wiring/double wiring. Complete these specifications when specifying the wiring order and additional cables)

Connector pin No.			Installation position																							
T10/T10R	T11/T11R	T30/T30R	1	2	3	4	5	6	7	8	9	10	11	12	13	14	15	16	17	18	19	20	21	22	23	24
1	**1**	1																								
2	**2**	14																								
3	**3**	2																								
4	**4**	15																								
5	**5**	3																								
6	**6**	16																								
7	**7**	4																								
8	**8**	17																								
9	**9**	5																								
10	**10**	18																								
11	**11**	6																								
12	**12**	19																								
13	**13**	7																								
14	**14**	20																								
15	**15**	8																								
16	**16**	21																								
COM	**17**	9																								
COM	**18**	22																								
	19	10																								
	20	23																								
	21	11																								
	22	24																								
	23	12																								
	24	25																								
	COM	13 (COM)																								
	COM																									

M4G3 reduced wiring

M4G $^{A}_{B}$ 3-T1/3 Manifold specifications sheet

Issued / /

Company

Contact

Order No.

● Contact ● Quantity set(s) ● Delivery date /

Slip No.	Order No.

● Manifold model No.

M □ G $^{A}_{B}$ 3 □ 0R- □ - □ □ □ □ - □ - □

Solenoid valve / Solenoid position / Port size / Reduced wiring connection / Terminal connector pin array / Option / Mount / Station No. / Voltage

Solenoid valve model No.	Fitting CX A	Fitting CX B	Valve installation position 1	2	3	4	5	6	7	8	9	10	11	12	13	14	15	16	17	18	19	20	21	22	23	24	Quantity
4G □ 3 □ 9R- □																											
4G □ 3 □ 9R- □																											
4G □ 3 □ 9R- □																											
4G □ 3 □ 9R- □																											
4G □ 3 □ 9R- □																											
3GA3 □ 9R- □																											
3GA3 □ 9R- □																											
Masking plate **4G3R-MP(S)- □**																											
Masking plate **4G3R-MP(D)- □**																											
Air supply spacer **4G3R-P- □**																											
In-stop valve spacer **4G3R-IS**																											
Exhaust spacer **4G3R-R- □**																											

Mounting rail	Accessory	Blanking plug						Thread plug		Silencer			
L_2= □ * Write an integer multiple of 12.5.		**GWP6-B**		**GWP8-B**		**GWP10-B**		**4G3R-08P**		**SLW-10A**		**SLW-10L**	
		Cable with D sub-connector	4GR-CABLE-D0□ - □										

● Wiring specifications sheet (Not required for standard wiring/double wiring. Complete these specifications when specifying the wiring order and additional cables)

Connector pin No. T10/T10R	T11/T11R	T30/T30R	Installation position 1	2	3	4	5	6	7	8	9	10	11	12	13	14	15	16	17	18	19	20	21	22	23	24
1	**1**	1																								
2	**2**	14																								
3	**3**	2																								
4	**4**	15																								
5	**5**	3																								
6	**6**	16																								
7	**7**	4																								
8	**8**	17																								
9	**9**	5																								
10	**10**	18																								
11	**11**	6																								
12	**12**	19																								
13	**13**	7																								
14	**14**	20																								
15	**15**	8																								
16	**16**	21																								
COM	**17**	9																								
COM	**18**	22																								
	19	10																								
	20	23																								
	21	11																								
	22	24																								
	23	12																								
	24	25																								
	COM	13 (COM)																								
	COM																									

M4G1 Wire Saving

M4G$^{A}_{B}$1-T5 Manifold specification

Issued / /

Company

Contact

Order No.

● Responsible ● quantity set ● Delivery date

Voucher No.	Order No.

● manifold model number

M ☐ G $^{A}_{B}$1 ☐ 0R- ☐ - ☐ ☐ ☐ ☐ - ☐ - ☐

solenoid valve | switching location classification | connection aperture | Wire Saving Connection | terminal connector pin array system | Optional | Mount | series | Voltage

solenoid valve model number	Joint CX A	Joint CX B	valve installation position 1	2	3	4	5	6	7	8	9	10	11	12	13	14	15	16	17	18	19	20	21	22	23	24	number of pcs
4G ☐ 1 ☐ 9R- ☐ - ☐																											
4G ☐ 1 ☐ 9R- ☐ - ☐																											
4G ☐ 1 ☐ 9R- ☐ - ☐																											
4G ☐ 1 ☐ 9R- ☐ - ☐																											
4G ☐ 1 ☐ 9R- ☐ - ☐																											
3G ☐ 1 ☐ 9R- ☐ - ☐																											
3G ☐ 1 ☐ 9R- ☐ - ☐																											
MASKING PLATE **4G1R-MP(S)-** ☐																											
MASKING PLATE **4G1R-MP(D)-** ☐																											
AIR SUPPLY SPACER **4G1R-P-** ☐																											
INSTEP VALVE SPACER **4G1R-IS**																											
exhaust spacer **4G1R-R-** ☐																											
PILOT CHECK VALVE SPACER **4G1R-PC-** ☐																											

installation rail	attachment parts	blank plug				screw plug		Silencer			
L_2= ☐ *Enter a value that is an integer multiple of 12.5.		PG-P2-B	☐	GWP4-B	☐	4G1R-M5P	☐	SLW-6S	☐	SLW-6A	☐
		GWP6-B	☐	GWP8-B	☐						
		Push-in fitting tube remover (attached as standard) ☐ Not required (check the box)dard addition)									

*M4GB C8 does not have a tube stripper.

● Wiring specifications (not required for standard or double wiring). Specify the wiring sequence and the additional cables.)

Connector Pin No. T50/T50R	T51/T51R	T52/T52R	T53/T53R	installation location 1	2	3	4	5	6	7	8	9	10	11	12	13	14	15	16	17	18	19	20	21	22	23	24
1	1	1	1																								
2	2	2	2																								
3	3	3	3																								
4	4	4	4																								
5	5	5	5																								
6	6	6	6																								
7	7	7	7																								
8	8	8	8																								
9 - Power supply	9	9 COM	9																								
10 +(COM)Power	10	10 COM	10																								
11	11		11																								
12	12		12																								
13	13		13																								
14	14		14																								
15	15		15																								
16	16		16																								
17	17		17																								
18	18		18																								
19 - Power supply	19 COM		19																								
20 +(COM)Power	20 COM		20																								
			21																								
			22																								
			23																								
			24																								
			25 COM																								
			26 COM																								

*: Please note that the polarity of COM is + (plus) when the wiring system is T50 type.
*: For the T50 routing scheme, the connector pins NO.9, 10, 19, and 20 are not allowed because they are for external input power.

M4G2 reduced wiring

M4G$^{A}_{B}$2-T5 Manifold specifications sheet

Issued / /

Company

Contact

Order No.

● Contact ● Quantity set(s) ● Delivery date /

Slip No.	Order No.

● Manifold model No.

M □ **G$^{A}_{B}$2** □ **0R-** □ **-** □ □ □ □ **-** □ **-** □

Solenoid valve | Solenoid position | Port size | Reduced wiring connection | Terminal connector pin array | Option | Mount | Station No. | Voltage

Solenoid valve model No.	Fitting CX A	Fitting CX B	Valve installation position 1	2	3	4	5	6	7	8	9	10	11	12	13	14	15	16	17	18	19	20	21	22	23	24	Quantity
4G□2□9R-□-□																											
4G□2□9R-□-□																											
4G□2□9R-□-□																											
4G□2□9R-□-□																											
4G□2□9R-□-□																											
3G□2□9R-□-□																											
3G□2□9R-□-□																											
Masking plate **4G2R-MP(S)-**																											
Masking plate **4G2R-MP(D)-**																											
Air supply spacer **4G2R-P-** □																											
In-stop valve spacer **4G2R-IS**																											
Exhaust spacer **4G2R-R-** □																											
Pilot check valve spacer **4G2R-PC**□																											

Mounting rail: L_2= □ * Write an integer multiple of 12.5.

Accessory:

Blanking plug				Thread plug		Silencer			
GWP4-B		**GWP6-B**		**4G2R-06P**		**SLW-8S**		**SLW-8A**	
GWP8-B		**GWP10-B**							

* Can only be selected for B types.

● Wiring specifications sheet (Not required for standard wiring/double wiring. Complete these specifications when specifying the wiring order and additional cables)

Connector pin No. T50/T50R	T51/T51R	T52/T52R	T53/T53R	Installation position 1	2	3	4	5	6	7	8	9	10	11	12	13	14	15	16	17	18	19	20	21	22	23	24
1	1	1	1																								
2	2	2	2																								
3	3	3	3																								
4	4	4	4																								
5	5	5	5																								
6	6	6	6																								
7	7	7	7																								
8	8	8	8																								
9 - Power supply	9	9 COM	9																								
10 + (COM) Power supply	10	10 COM	10																								
11	11		11																								
12	12		12																								
13	13		13																								
14	14		14																								
15	15		15																								
16	16		16																								
17	17		17																								
18	18		18																								
19 - Power supply	19 COM		19																								
20 + (COM) Power supply	20 COM		20																								
			21																								
			22																								
			23																								
			24																								
			25 COM																								
			26 COM																								

* Note that when T50 type wiring is used, the COM polarity is + (plus).

* When T50 wiring is used, connector pin numbers 9, 10, 19, and 20 cannot be specified, because they are used for the external input power supply.

M4G3 reduced wiring

M4G$^{A}_{B}$3-T5 Manifold specifications sheet

Issued / /

Company

Contact

Order No.

● Contact ● Quantity set(s) ● Delivery date /

Slip No.	Order No.

● Manifold model No.

M G $^{A}_{B}$ 3 0R- - - -

Solenoid valve | Solenoid position | Port size | Reduced wiring connection | Terminal connector pin array | Option | Mount | Station No. | Voltage

Solenoid valve model No.	Fitting CX A	Fitting CX B	Valve installation position 1	2	3	4	5	6	7	8	9	10	11	12	13	14	15	16	17	18	19	20	21	22	23	24	Quantity
4G 3 9R-																											
4G 3 9R-																											
4G 3 9R-																											
4G 3 9R-																											
4G 3 9R-																											
3GA3 9R-																											
3GA3 9R-																											
Masking plate 4G3R-MP(S)-																											
Masking plate 4G3R-MP(D)-																											
Air supply spacer 4G3R-P-																											
In-stop valve spacer 4G3R-IS																											
Exhaust spacer 4G3R-R-																											

Mounting rail	L_2= * Write an integer multiple of 12.5.	Accessory	Blanking plug						Thread plug		Silencer			
			GWP6-B		GWP8-B		GWP10-B		4G3R-08P		SLW-10A		SLW-10L	

● Wiring specifications sheet (Not required for standard wiring/double wiring. Complete these specifications when specifying the wiring order and additional cables)

Connector pin No. T50/T50R	T51/T51R	T52/T52R	T53/T53R	Installation position 1	2	3	4	5	6	7	8	9	10	11	12	13	14	15	16	17	18	19	20	21	22	23	24
1	1	1	1																								
2	2	2	2																								
3	3	3	3																								
4	4	4	4																								
5	5	5	5																								
6	6	6	6																								
7	7	7	7																								
8	8	8	8																								
9 - Power supply	9	9 COM	9																								
10 + (COM) Power supply	10	10 COM	10																								
11	11		11																								
12	12		12																								
13	13		13																								
14	14		14																								
15	15		15																								
16	16		16																								
17	17		17																								
18	18		18																								
19 - Power supply	19 COM		19																								
20 + (COM) Power supply	20 COM		20																								
			21																								
			22																								
			23																								
			24																								
			25 COM																								
			26 COM																								

* When T50 wiring is used, the COM polarity is + (positive).
* When T50 wiring is used, connector pin numbers 9, 10, 19, and 20 cannot be specified, because they are used for the external input power supply.

M4G1 Serial Transmission Type

M4G$^{A}_{B}$1-T6G1 Manifold specification

Issued / /

Company

Responsible

Order No.

● Responsible ● quantity set ● Delivery date

Voucher No.	Order No.

● manifold model number

M □ G $^{A}_{B}$ 1 □ 0R- □ - T6G1 □ □ D - □ - 3

Solenoid valve | Switching location classification | Connection aperture | Serial transmission | Terminal/Connector Pin Arrangement System | Optional | Series | Voltage

solenoid valve model number	Joint CX A	Joint CX B	valve installation position 1	2	3	4	5	6	7	8	9	10	11	12	13	14	15	16	number of uses
4G □ 1 □ 9R- □ - □																			
4G □ 1 □ 9R- □ - □																			
4G □ 1 □ 9R- □ - □																			
4G □ 1 □ 9R- □ - □																			
4G □ 1 □ 9R- □ - □																			
3G □ 1 □ 9R- □ - □																			
3G □ 1 □ 9R- □ - □																			
MASKING PLATE **4G1R-MP(S)-** □																			
MASKING PLATE **4G1R-MP(D)-** □																			
AIR SUPPLY SPACER **4G1R-P-** □																			
INSTEP VALVE SPACER **4G1R-IS**																			
exhaust spacer **4G1R-R-** □																			
PILOT CHECK VALVE SPACER **4G1R-PC-** □																			

installation rail	attachment parts	blank plug				screw plug		Silencer			
L_2= □ *Enter a value that is an integer multiple of 12.5.		**PG-P2-B**		**GWP4-B**		**4G1R-M5P**		**SLW-6S**		**SLW-6A**	
		GWP6-B		**GWP8-B**							
		Push-in fitting tube remover (attached as standard) ☐ Not required (check the box)									

*M4GB C8 does not have a tube stripper.

● Wiring specifications (not required for standard or double wiring). Specify the wiring sequence and the additional cables.)

Connector Pin NO.		installation location
T6G1		1	2	3	4	5	6	7	8	9	10	11	12	13	14	15	16
T6G1:CC-Link 16 points	1																
	2																
	3																
	4																
	5																
	6																
	7																
	8																
	9																
	10 COM																
	11																
	12																
	13																
	14																
	15																
	16																
	17																
	18																
	19																
	20 COM																

M4G2 Serial transmission

M4G$^{A}_{B}$2-T6G1 Manifold specifications sheet

Issued / /

Company

Contact

Order No.

● Contact ● Quantity set(s) ● Delivery date /

Slip No.	Order No.

● Manifold model No.

M [ ] **G** $^{A}_{B}$ **2** [ ] **0R-** [ ] **- T6G1** [ ] [ ] **D-** [ ] **- 3**

Solenoid valve / Solenoid position / Port size / Serial transmission / Terminal/connector pin array / Option / Station No. / Voltage

Solenoid valve model No.	Fitting CX A	Fitting CX B	Valve installation position 1	2	3	4	5	6	7	8	9	10	11	12	13	14	15	16	Quantity
4G [ ] 2 [ ] 9R- [ ] - [ ]																			
4G [ ] 2 [ ] 9R- [ ] - [ ]																			
4G [ ] 2 [ ] 9R- [ ] - [ ]																			
4G [ ] 2 [ ] 9R- [ ] - [ ]																			
4G [ ] 2 [ ] 9R- [ ] - [ ]																			
3G [ ] 2 [ ] 9R- [ ] - [ ]																			
3G [ ] 2 [ ] 9R- [ ] - [ ]																			
Masking plate **4G2R-MP(S)-** [ ]																			
Masking plate **4G2R-MP(D)-** [ ]																			
Air supply spacer **4G2R-P-** [ ]																			
In-stop valve spacer **4G2R-IS**																			
Exhaust spacer **4G2R-R-** [ ]																			
Pilot check valve spacer **4G2R-PC**□																			

Mounting rail	Accessory	Blanking plug				Thread plug		Silencer			
L_2= [ ] * Write an integer multiple of 12.5.		**GWP4-B**	[ ]	**GWP6-B**	[ ]	**4G2R-06P**	[ ]	**SLW-8S**	[ ]	**SLW-8A**	[ ]
		GWP8-B	[ ]	**GWP10-B**	[ ]						

● Wiring specifications sheet (Not required for standard wiring/double wiring. Complete these specifications when specifying the wiring order and additional cables)

Connector pin No.		Installation position 1	2	3	4	5	6	7	8	9	10	11	12	13	14	15	16
T6G1																	
T6G1: CC-Link 16 points	1																
	2																
	3																
	4																
	5																
	6																
	7																
	8																
	9																
	10 COM																
	11																
	12																
	13																
	14																
	15																
	16																
	17																
	18																
	19																
	20 COM																

M4G3 Serial transmission

M4G$^{A}_{B}$3-T6G1 Manifold specifications sheet

Issued / /

Company

Contact

Order No.

● Contact ● Quantity set(s) ● Delivery date /

Slip No.	Order No.

● Manifold model No.

M [ ] **G$^{A}_{B}$3** [ ] **0R-** [ ] **- T6G1** [ ] [ ] **D-** [ ] **- 3**

Solenoid valve | Solenoid position | Port size | Serial transmission | Terminal/connector pin array | Option | Station No. | Voltage

Solenoid valve model No.	Fitting CX A	Fitting CX B	Valve installation position 1	2	3	4	5	6	7	8	9	10	11	12	13	14	15	16	Quantity
4G [ ] 3 [ ] 9R- [ ]																			
4G [ ] 3 [ ] 9R- [ ]																			
4G [ ] 3 [ ] 9R- [ ]																			
4G [ ] 3 [ ] 9R- [ ]																			
4G [ ] 3 [ ] 9R- [ ]																			
3GA3 [ ] 9R- [ ]																			
3GA3 [ ] 9R- [ ]																			
Masking plate 4G3R-MP(S)- [ ]																			
Masking plate 4G3R-MP(D)- [ ]																			
Air supply spacer 4G3R-P- [ ]																			
In-stop valve spacer 4G3R-IS																			
Exhaust spacer 4G3R-R- [ ]																			

Mounting rail	Accessory	Blanking plug						Thread plug		Silencer			
L_2= [ ] * Write an integer multiple of 12.5.		GWP6-B		GWP8-B		GWP10-B		4G3R-08P		SLW-10A		SLW-10L	

● Wiring specifications sheet (Not required for standard wiring/double wiring. Complete these specifications when specifying the wiring order and additional cables)

Connector pin No. T6G1		Installation position 1	2	3	4	5	6	7	8	9	10	11	12	13	14	15	16
T6G1: CC-Link 16 points	1																
	2																
	3																
	4																
	5																
	6																
	7																
	8																
	9																
	10 COM																
	11																
	12																
	13																
	14																
	15																
	16																
	17																
	18																
	19																
	20 COM																

M4G1 Serial transmission thin

M4G$^{A}_{B}$1-T8 Manifold specification sheet

Issued / /

Company

Responsible

Order No.

● Responsible ● quantity set ● Delivery date

Voucher No.	Order No.

● manifold model number

M [ ] **G** $^{A}_{B}$**1** [ ] **0R-** [ ] **-** [ ] [ ] [ ] [ ] **-** [ ] **-** **3**

Solenoid valve | Switching location classification | Connection aperture | Serial transmission | Terminal/connector pin array | Optional | Mount Type | Series | Voltage

solenoid valve model number	Joint CX A	Joint CX B	valve installation position 1	2	3	4	5	6	7	8	9	10	11	12	13	14	15	16	17	18	19	20	number of sides
4G [ ] 1 [ ] 9R- [ ] - [ ]																							
4G [ ] 1 [ ] 9R- [ ] - [ ]																							
4G [ ] 1 [ ] 9R- [ ] - [ ]																							
4G [ ] 1 [ ] 9R- [ ] - [ ]																							
4G [ ] 1 [ ] 9R- [ ] - [ ]																							
3G [ ] 1 [ ] 9R- [ ] - [ ]																							
3G [ ] 1 [ ] 9R- [ ] - [ ]																							
MASKING PLATE **4G1R-MP(S)-**																							
MASKING PLATE **4G1R-MP(D)-**																							
AIR SUPPLY SPACER **4G1R-P-**																							
INSTEP VALVE SPACER **4G1R-IS**																							
exhaust spacer **4G1R-R-** [ ]																							
PILOT CHECK VALVE SPACER **4G1R-PC-** [ ]																							

installation rail	attachment parts	blank plug				screw plug		Silencer			
L_2= [ ] *Enter a value that is an integer multiple of 12.5.		PG-P2-B		GWP4-B		4G1R-M5P		SLW-6S		SLW-6A	
		GWP6-B		GWP8-B							
		Push-in fitting tube remover (attached as standard) ☐ Not required (check the box)									

*M4GB C8 does not have a tube stripper.

● Wiring specifications sheet (Not required for standard wiring/double wiring. Complete these specifications when specifying the wiring order and additional cables)

Connector Pin NO. T8*				installation location 1	2	3	4	5	6	7	8	9	10	11	12	13	14	15	16	17	18	19	20
T8G1	CC-Link	NPN	16 points	1																			
T8G2			32 points	2																			
T8GP1		PNP	16 points	3																			
T8GP2			32 points	4																			
T8P1	PROFIBUS-DP	NPN	16 points	5																			
T8P2			32 points	6																			
T8PP1		PNP	16 points	7																			
T8PP2			32 points	8																			
T8EC1	EtherCAT	NPN	16 points	9																			
T8EC2			32 points	10																			
T8ECP1		PNP	16 points	11																			
T8ECP2			32 points	12																			
T8EN1	EtherNet/IP	NPN	16 points	13																			
T8EN2			32 points	14																			
T8ENP1		PNP	16 points	15																			
T8ENP2			32 points	16																			
T8D1	DeviceNet	NPN	16 points	17																			
T8D2			32 points	18																			
T8DP1		PNP	16 points	19																			
T8DP2			32 points	20																			
T8EB1	CC-Link IEF Basic	NPN	16 points	21																			
T8EB2			32 points	22																			
T8EBP1		PNP	16 points	23																			
T8EBP2			32 points	24																			
T8EP1	PROFINET	NPN	16 points	25																			
T8EP2			32 points	26																			
T8EPP1		PNP	16 points	27																			
T8EPP2			32 points	28																			
				29																			
				30																			
				31																			
				32																			

M4G2 Serial transmission thin

M4G$^{A}_{B}$2-T8 Manifold specifications sheet

Issued / /

Company

Contact

Order No.

● Contact ● Quantity set(s) ● Delivery date /

Slip No.	Order No.

● Manifold model No.

M □ **G$^{A}_{B}$2** □ **0R-** □ **-** □ □ □ □ **-** □ **-** **3**

Solenoid valve · Solenoid position · Port size · Serial transmission · Terminal/connector pin array · Option · Mount · Station No. · Voltage

Solenoid valve model No.	Fitting CX A	Fitting CX B	Valve installation position 1	2	3	4	5	6	7	8	9	10	11	12	13	14	15	16	17	18	19	20	Quantity
4G □ 2 □ 9R- □ - □																							
4G □ 2 □ 9R- □ - □																							
4G □ 2 □ 9R- □ - □																							
4G □ 2 □ 9R- □ - □																							
4G □ 2 □ 9R- □ - □																							
3G □ 2 □ 9R- □ - □																							
3G □ 2 □ 9R- □ - □																							
Masking plate **4G2R-MP(S)-** □																							
Masking plate **4G2R-MP(D)-** □																							
Air supply spacer **4G2R-P-** □																							
In-stop valve spacer **4G2R-IS**																							
Exhaust spacer **4G2R-R-** □																							
Pilot check valve spacer **4G2R-PC**□																							

Mounting rail: L_2= □ (* Write an integer multiple of 12.5.)

Accessory:

Blanking plug				Thread plug		Silencer			
GWP4-B		**GWP6-B**		**4G2R-06P**		**SLW-8S**		**SLW-8A**	
GWP8-B		**GWP10-B**							

● Wiring specifications sheet (Not required for standard wiring/double wiring. Complete these specifications when specifying the wiring order and additional cables)

Connector pin No. **T8***				Installation position	1	2	3	4	5	6	7	8	9	10	11	12	13	14	15	16	17	18	19	20
T8G1	CC-Link	NPN	16 points	1																				
T8G2			32 points	2																				
T8GP1		PNP	16 points	3																				
T8GP2			32 points	4																				
T8P1	PROFIBUS-DP	NPN	16 points	5																				
T8P2			32 points	6																				
T8PP1		PNP	16 points	7																				
T8PP2			32 points	8																				
T8EC1	EtherCAT	NPN	16 points	9																				
T8EC2			32 points	10																				
T8ECP1		PNP	16 points	11																				
T8ECP2			32 points	12																				
T8EN1	EtherNet/IP	NPN	16 points	13																				
T8EN2			32 points	14																				
T8ENP1		PNP	16 points	15																				
T8ENP2			32 points	16																				
T8D1	DeviceNet	NPN	16 points	17																				
T8D2			32 points	18																				
T8DP1		PNP	16 points	19																				
T8DP2			32 points	20																				
T8EB1	CC-Link IEF Basic	NPN	16 points	21																				
T8EB2			32 points	22																				
T8EBP1		PNP	16 points	23																				
T8EBP2			32 points	24																				
T8EP1	PROFINET	NPN	16 points	25																				
T8EP2			32 points	26																				
T8EPP1		PNP	16 points	27																				
T8EPP2			32 points	28																				
				29																				
				30																				
				31																				
				32																				

M4G3 Serial transmission thin

M4G$^{A}_{B}$3-T8 Manifold specifications sheet

Issued / /

Company

Contact

Order No.

● Contact ● Quantity set(s) ● Delivery date /

Slip No.	Order No.

● Manifold model No.

M [ ] **G**$^{A}_{B}$**3** [ ] **0R-** [ ] **-** [ ] [ ] [ ] [ ] **-** [ ] **-** **3**

Solenoid valve / Solenoid position / Port size / Serial transmission / Terminal/connector pin array / Option / Mount / Station No. / Voltage

Solenoid valve model No.	Fitting CX A	Fitting CX B	Valve installation position 1	2	3	4	5	6	7	8	9	10	11	12	13	14	15	16	Quantity
4G [ ] 3 [ ] 9R- [ ]																			
4G [ ] 3 [ ] 9R- [ ]																			
4G [ ] 3 [ ] 9R- [ ]																			
4G [ ] 3 [ ] 9R- [ ]																			
4G [ ] 3 [ ] 9R- [ ]																			
3GA3 [ ] 9R- [ ]																			
3GA3 [ ] 9R- [ ]																			
Masking plate **4G3R-MP(S)-** [ ]																			
Masking plate **4G3R-MP(D)-** [ ]																			
Air supply spacer **4G3R-P-** [ ]																			
In-stop valve spacer **4G3R-IS**																			
Exhaust spacer **4G3R-R-** [ ]																			

Mounting rail	Accessory	Blanking plug						Thread plug		Silencer			
L_2= [ ] * Write an integer multiple of 12.5.		**GWP6-B**		**GWP8-B**		**GWP10-B**		**4G3R-08P**		**SLW-10A**		**SLW-10L**	

● Wiring specifications sheet (Not required for standard wiring/double wiring. Complete these specifications when specifying the wiring order and additional cables)

Connector pin No. T8*				Installation position	1	2	3	4	5	6	7	8	9	10	11	12	13	14	15	16
T8G1	CC-Link	NPN	16 points	1																
T8G2			32 points	2																
T8GP1		PNP	16 points	3																
T8GP2			32 points	4																
T8P1	PROFIBUS-DP	NPN	16 points	5																
T8P2			32 points	6																
T8PP1		PNP	16 points	7																
T8PP2			32 points	8																
T8EC1	EtherCAT	NPN	16 points	9																
T8EC2			32 points	10																
T8ECP1		PNP	16 points	11																
T8ECP2			32 points	12																
T8EN1	EtherNet/IP	NPN	16 points	13																
T8EN2			32 points	14																
T8ENP1		PNP	16 points	15																
T8ENP2			32 points	16																
T8D1	DeviceNet	NPN	16 points	17																
T8D2			32 points	18																
T8DP1		PNP	16 points	19																
T8DP2			32 points	20																
T8EB1	CC-Link IEF Basic	NPN	16 points	21																
T8EB2			32 points	22																
T8EBP1		PNP	16 points	23																
T8EBP2			32 points	24																
T8EP1	PROFINET	NPN	16 points	25																
T8EP2			32 points	26																
T8EPP1		PNP	16 points	27																
T8EPP2			32 points	28																
				29																
				30																
				31																
				32																

MN4GA/4GB

Block manifold

Pilot operated 3, 5-port valve

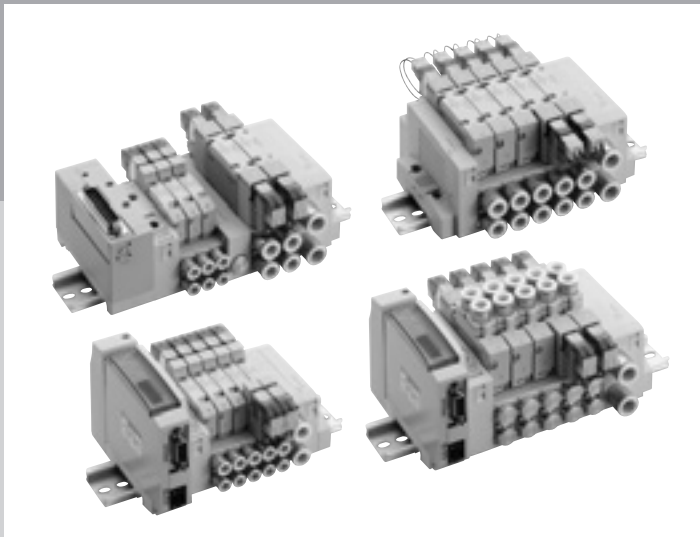

CONTENTS

Series variation	226
Electrical connections list (wire connections/circuit)	229
Product introduction	2
Individual wiring block manifold	
● Body piping (MN4GA1/2)	230
● Base piping (MN4GB1/2)	238
Reduced wiring block manifold	
● Body piping (MN4GA1/2-T*)	246
● Base piping (MN4GB1/2-T*)	262
Internal structure and parts list	280
Mix manifold	
● 4G1/2 (MN3GAX12/MN4GAX12/MN4GBX12)	284
Block components	286
Related products (air supply spacer/pilot check valve/ silencer/blanking plug, etc.)	295
Related parts	306
Manifold and wiring specifications sheet	307
Technical data	
(1) Pneumatic system selection guide	844
(2) Notes on wiring	815
(3) Exhaust check valve	851
(4) How to expand reduced wiring manifold	836
⚠ Safety precautions	850

Series variation

MN4GA/4GB Series

* Refer to page 7 for metal base (integrated).
* Refer to page 321 for the master valve.

Series appearance			Model No.	Electrical connections	Position Number of solenoids JIS symbol	Valve performance: Flow characteristics C [dm³/(s·bar)] *1	Valve performance: Applicable cylinder bore size	Voltage (V)
Individual wiring manifold	Body piping	MN4GA180R 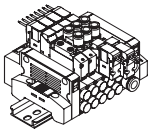	MN4GA1	Blank -E □	● 3-port valve 2-position single NC 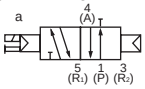 2-position single NO 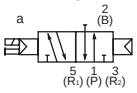 ● 5-port valve 2-position single 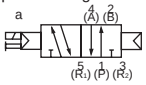 2-position double 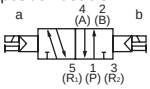 3-position all ports closed 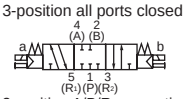 3-position A/B/R connection 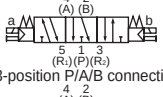 3-position P/A/B connection 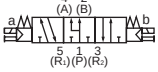 ● Two 3-port valves integrated NC/NC 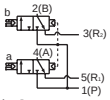 NC/NO 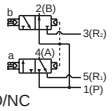 NO/NC 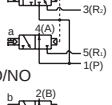 NO/NO 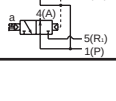	1.0 to 1.2	ø20 to ø40	100 AC 200 AC 24 DC 12 DC 3 DC 5 DC (*2)
			MN4GA2	Blank -E □ -B		2.2 to 2.5	ø40 to ø80	
	Base piping	MN4GB180R 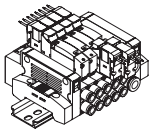	MN4GB1	Blank -E □		1.0 to 1.2	ø20 to ø40	
			MN4GB2	Blank -E □ -B		2.2 to 2.5	ø40 to ø80	
Reduced wiring manifold	Body piping	Terminal MN4GA280R 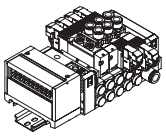	MN4GA1 (N3GA1) (N4GA1)	-T10 -T11 (-A2N)		1.0 to 1.2	ø20 to ø40	24 DC 12 DC
			MN4GA2 (N3GA2) (N4GA2)			2.2 to 2.5	ø40 to ø80	
		Connector MN4GA280R 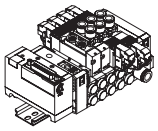	MN4GA1 (N3GA1) (N4GA1)	-T30 -T5 □ (-A2N)		1.0 to 1.2	ø20 to ø40	24 DC 12 DC
			MN4GA2 (N3GA2) (N4GA2)			2.2 to 2.5	ø40 to ø80	
		Serial transmission MN4GA180R 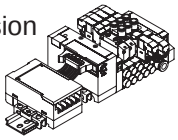	MN4GA1 (N3GA1) (N4GA1)	-T6G1 -T7 □ -T8 □ (-A2N)		1.0 to 1.2	ø20 to ø40	24 DC
			MN4GA2 (N3GA2) (N4GA2)			2.2 to 2.5	ø40 to ø80	
	Base piping	Terminal MN4GB180R 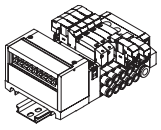	MN4GB1 (N4GB1)	-T10 -T11 (-A2N)		1.0 to 1.2	ø20 to ø40	24 DC 12 DC
			MN4GB2 (N4GB2)			2.2 to 2.5	ø40 to ø80	
		Connector MN4GB180R 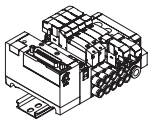	MN4GB1 (N4GB1)	-T30 -T5 □ (-A2N)		1.0 to 1.2	ø20 to ø40	24 DC 12 DC
			MN4GB2 (N4GB2)			2.2 to 2.5	ø40 to ø80	
		Serial transmission MN4GB280R 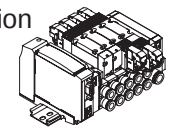	MN4GB1 (N4GB1)	-T6G1 -T7 □ -T8 □ (-A2N)		1.0 to 1.2	ø20 to ø40	24 DC
			MN4GB2 (N4GB2)			2.2 to 2.5	ø40 to ø80	

*1: Effective cross-sectional area S and sonic conductance C are converted as S ≈ 5.0 × C.
*2: The grommet lead wire specifications are compatible with DC voltage only.
*3: Only compatible with the base piping models.
*4: Specifications for reduced wiring equipped manifolds. Only 12/24 VDC is supported.

Switching position									A/B Piping port																		A/B Piping port						Electrical connections															Page
2-position				3-position				Two 3-port valves integrated	Barbed fitting	Push-in fitting				Push-in L-fitting (upward) (*3)				Push-in L-fitting (downward)				Female thread		Push-in fitting				Female thread		Single, indiv wiring				Reduced wiring												
Normally closed	Normally open	Single	Double	All ports closed	ABR connection	PAB connection	Mix	ø1.8	ø1.8	ø4	ø6	ø8	ø1.8	ø4	ø6	ø8	ø1.8	ø4	ø6	ø8	M5	Rc1/8	ø1/8"	ø5/32"	ø1/4"	ø5/16"	NPT1/8	G1/8	Grommet lead (*2)	E-connector	EJ-connector	DIN terminal box	A-connector (*4)	Common terminal block	D-sub-connector	Flat cable with power supply terminal	Flat cable without power supply terminal	Serial transmission							
CF	C18	C4	C6	C8	CL18	CL4	CL6	CL8	CD18	CD4	CD6	CD8	M5	06	C3N	C4N	C6N	C8N	06N	06G	Blank	E□	EJ	B□	A2N	T1□	T30	T50	T5□	T6G1	T7□	T8□													
●	●	●	●	●	●	●	●	●	●	●	●	●									●				●																				230
●	●	●	●	●	●	●	●	●			●	●	●									●				●	●	●	●																	
		●	●	●	●	●	●	●	●	●	●	●		●	●	●		●	●	●				●	●					●	●	●															238
		●	●	●	●	●	●	●			●	●	●			●	●		●	●				●	●	●	●			●	●	●														
●	●	●	●	●	●	●	●	●	●	●	●	●									●				●								●	●													246
●	●	●	●	●	●	●	●	●			●	●	●									●				●	●	●	●																	
●	●	●	●	●	●	●	●	●	●	●	●	●									●				●								●		●	●	●									
●	●	●	●	●	●	●	●	●			●	●	●									●				●	●	●	●																	
●	●	●	●	●	●	●	●	●	●	●	●	●									●				●								●					●	●	●					
		●	●	●	●	●	●	●			●	●	●			●	●		●	●				●	●	●	●			●	●	●														262
		●	●	●	●	●	●	●	●	●	●	●		●	●	●		●	●	●				●	●					●	●	●														
		●	●	●	●	●	●	●			●	●	●									●				●								●		●	●	●								
		●	●	●	●	●	●	●	●	●	●	●									●				●	●	●	●																	
		●	●	●	●	●	●	●			●	●	●			●	●		●	●				●	●	●	●			●	●	●														

Electrical connections

Discrete valve/individual wiring manifold

Blank Grommet lead wire Ⓐ

● **Lead wire length**
300mm

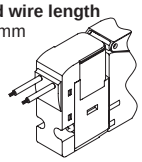

EO E-connector Ⓐ

● **Lead wire length**
300mm
500mm
1m
2m
3 m

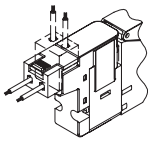

E0N E-connector without socket

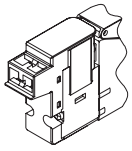

E1 E-connector with socket/terminal

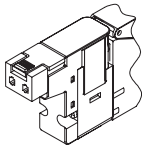

E2 E-connector ⒶⒷⒸ

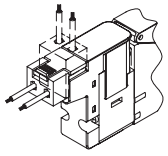

E2N E-connector without socket ⒷⒸ

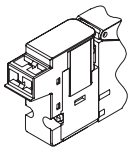

E3 E-connector with socket/terminal ⒷⒸ

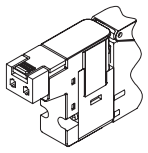

A2N A-connector downward without socket

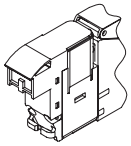

● For AC voltages, the ⓐ dimension is 3.5mm longer than for DC voltages.

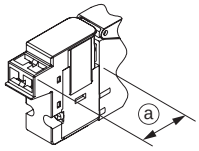

B BN DIN terminal box (BN):without terminal box)

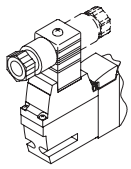

E0*J EJ-connector Ⓐ

● **Lead wire length**
1m
2m
3m

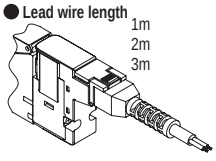

E2*J EJ-connector ⒶⒷⒸ

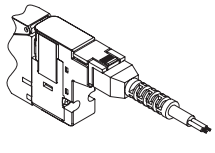

Reduced wiring manifolds

T10 Common terminal block M3 thread specifications (left)

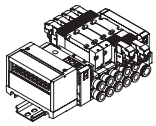

T10R Common terminal block M3 thread specifications (right side)

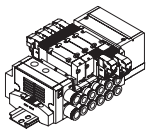

T11 Common terminal block clamping specifications (left side)

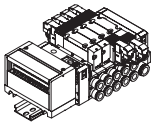

T11R Common terminal block clamping specifications (left side)

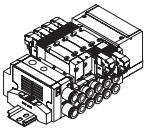

T30 D-sub-connector (Left)

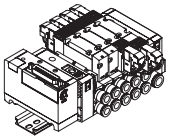

T30R D-sub-connector (Right)

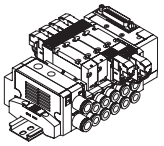

T50 Flat cable with power supply terminal (left side)

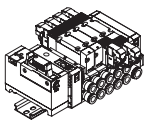

T50R Flat cable with power supply terminal (right side)

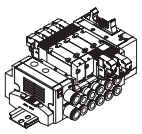

T5 1 2 3 Flat cable/power supply terminaland(Left)

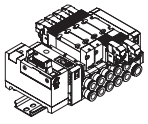

T5 1 2 3 R Flat cable without power supply terminal (right side)

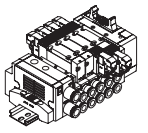

T6G1 Serial transmission

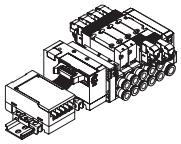

T7*0 T7*1 Serial transmission thin slot type

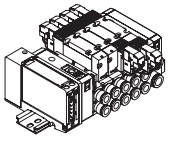

T8*1 T8*2 Serial transmission thin slot type

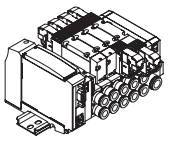

ⒶWith lead wire
ⒷWith indicator lamp
ⒸWith surge suppressor

Manual override

Blank Non-locking/locking common

(Standard equipment)

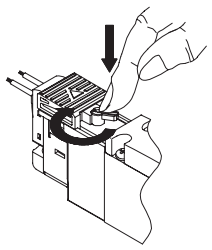

①For non-locking, push to turn ON and release to turn OFF

②For locking, push and turn 90° clockwise to hold the ON state. Turn counterclockwise to release OFF

M Non-locking

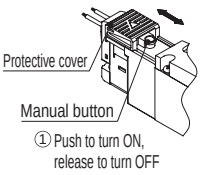

Other options

H With exhaust check valve

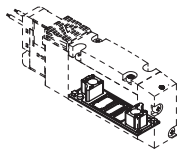

Standard for pilot exhaust

K External pilot

Main pressure and pilot pressure individual circuit specifications.

A Ozone/cutting fluid proof product

Ozone-proofing can be selected to prevent coolant from entering.

F Port A/B filter integrated

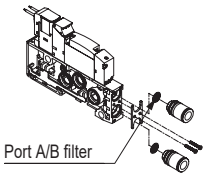

G1 G2 Pressure sensor

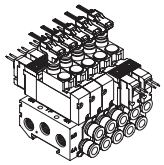

X X1 Residual pressure exhaust structure

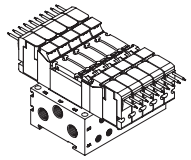

Z1 Z3 Air supply spacer Exhaust spacer

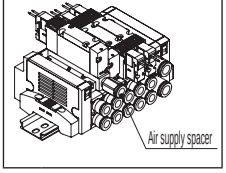

Electric connection circuit diagram

Other options
Z2 In-stop valve spacer
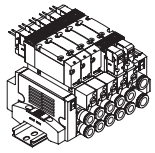
Z6 Spacer pilot check valve
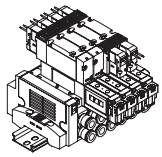
Pilot check valve (separate) * Refer to page 194
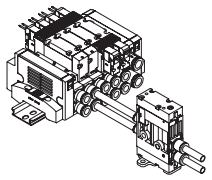
W1 Single spare wiring
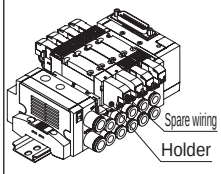
L With pipe adaptor
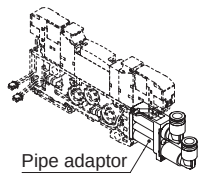
Q Reduced wiring duct
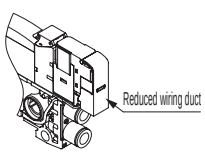

	Electrical connections		Without lead wire	With lead wire	With indicator lamp	With surge suppressor	Without socket	Circuit diagram
	Blank	Grommet lead wire		●				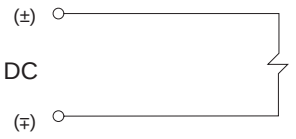
	E0	E-connector		●				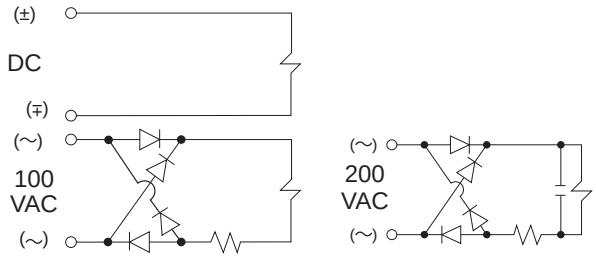
	E0*J	EJ-connector		●				
	E0N	E-connector					●	
	E1	E-connector	●					
	E2	E-connector		●	●	●		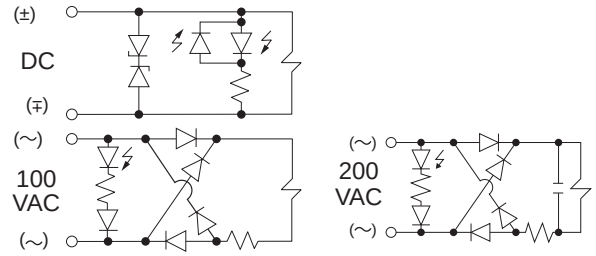
	E2*J	EJ-connector		●	●	●		
	E2N	E-connector			●	●	●	
	E3	E-connector	●		●	●		
	A2N	A-connector			●	●	●	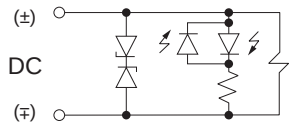
	B	DIN terminal box	●		●	●		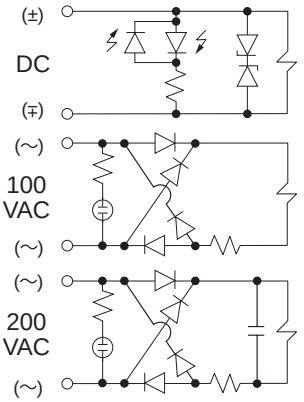
	BN	DIN terminal box (Without terminal box)						
Option S	**E2**	E-connector		●	●	●		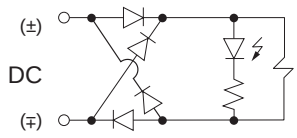
	E2*J	EJ-connector		●	●	●		
	E2N	E-connector			●	●	●	
	A2N	A-connector			●	●	●	
Option E	**E2**	E-connector		●	●	●		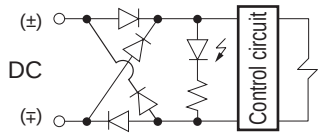
	E2*J	EJ-connector		●	●	●		
	E2N	E-connector			●	●	●	
	A2N	A-connector			●	●	●	

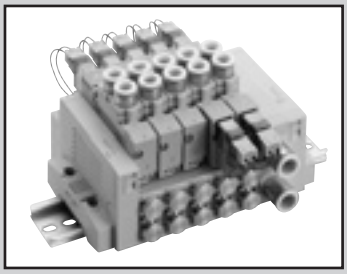

Individual wiring block manifold
Body piping

MN4GA1/2 Series

● Cylinder bore size: ø20 to ø80

JIS symbol

● 3-port valve

2-position single NC

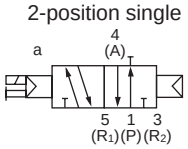

2-position single NO

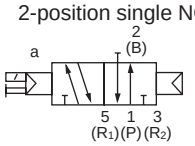

● Two 3-port valves integrated

(A side valve: NC, B side valve: NC)

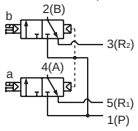

(A side valve: NC, B side valve: NO)

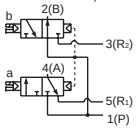

(A side valve: NO, B side valve: NC)

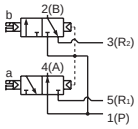

(A side valve: NO, B side valve: NO)

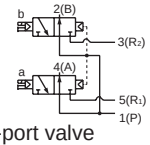

● 5-port valve

2-position single

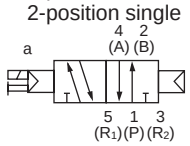

2-position double

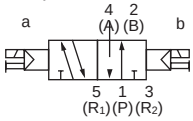

3-position all ports closed

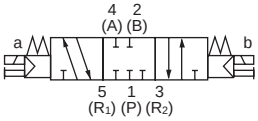

3-position A/B/R connection

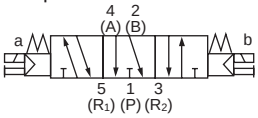

3-position P/A/B connection

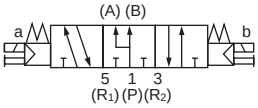

Manifold common specifications

Item	Description
Manifold	Block manifold
Mounting method	DIN rail mount
Supply and exhaust method	Common supply/common exhaust (With internal exhaust check valve)
Pilot exhaust method	Main valve/pilot valve common exhaust (Pilot exhaust check valve built-in)
Piping direction	Valve top direction
Valve and operation	Pilot operated soft spool valve
Working fluid	Compressed air
Max. working pressure MPa	0.7 (≈100 psi, 7 bar)
Min. working pressure MPa	0.2 (≈29 psi, 2 bar) (*3)
Proof pressure MPa	1.05 (≈150 psi, 10.5 bar)
Ambient temperature °C	-5 (23°F) to 55 (131°F) (no freezing)
Fluid temperature °C	5 (41°F) to 55 (131°F)
Manual override	Non-locking/locking common type (standard)
Lubrication (*1)	Not required
Degree of protection (*2)	Dust-proof
Vibration resistance m/s^2	50 or less
Shock resistance m/s^2	300 or less
Atmosphere	Cannot be used in corrosive gas environments

*1 Use turbine oil Class 1 ISO VG32 for lubrication. Excessive or intermittent lubrication results in unstable operation.

*2 Avoid dripping water or oil, etc., during use. IP65 (jet-proof) applies for DIN terminal box specifications. However, the specified outer diameter of the applicable cord and tightening torque must be used for fixing in place.

*3 The working pressure range is 0 to 0.7 MPa when the external pilot (option code: K) is selected. Set the external pilot pressure between 0.2 and 0.7 MPa.

Electrical specifications

Item		Description					
Rated voltage V		24 DC	12 DC	5 DC	3 DC	100 AC	200 AC
Voltage fluctuation range		±10%					
Holding current A (*4)	Standard	0.015 (0.017)	0.030 (0.034)	0.072 (0.082)	0.120 (0.136)	0.009 (0.009)	0.006 (0.006)
	With low exoergic/energy circuit	0.005	0.010	-		-	
Power consumption W (*4)	Standard	0.35(0.40)		0.35(0.40)		-	
	With low exoergic/energy circuit	0.1		-		-	
Apparent power VA (*4)	Standard	-		-		0.93 (0.98)	1.20 (1.40)
Thermal class		B					
Surge suppressor		Option					
Indicator		Lamp (option)					

*4: Values in ( ) apply when lamp is included. In addition, the type with low exoergic/energy circuit is only available with lamp.

Individual specifications

Item			MN3GA1/MN4GA1	MN3GA2/MN4GA2
Max. station No.			24 stations	20 stations
Port size	Metric fitting/ M5, Rc thread	A/B port	Barbed fitting ø1.8 Push-in fitting ø1.8, ø4, ø6 M5	Push-in fitting ø4, ø6, ø8 Rc1/8
		P/R port	Push-in fitting ø6, ø8	Push-in fitting ø8, ø10
	Inch fitting/ M5, NPT thread	A/B port	Push-in fitting ø1/8", ø5/32" M5	Push-in fitting ø1/4", ø5/16" NPT1/8
		P/R port	Push-in fitting ø1/4", ø5/16"	Push-in fitting ø5/16", ø3/8"
	Metric fitting, G thread	A/B port	-	G1/8
		P/R port	-	Push-in fitting ø8, ø10

· For DIN rail mounting, refer to "Mounting orientation" on page 855.
· For weight, refer to page 234.

Performance/characteristics by model

Item			MN3GA1/MN4GA1		MN3GA2/MN4GA2	
			ON	OFF	ON	OFF
Response time ms	Two 3-port valves integrated		9	12	12	29
	2-position	Single	12	12	19	19
		Double	9	-	18	-
	3-position	ABR connection	8	15	17	30

Values with lamp/surge suppressor are shown. The response time is the value with supply pressure of 0.5 MPa at 20°C and without lubrication. It depends on the pressure and the lubricant quality.

Flow characteristics

Model No.	Solenoid position		P→A/B		A/B→R1/R2	
			C[dm³/(s·bar)]	b	C[dm³/(s·bar)]	b
MN3GA1 MN4GA1	Two 3-port valves integrated		0.87	0.37	1.0 (0.68)	0.14 (0.22)
	2-position		0.98	0.33	1.2 (0.71)	0.11 (0.27)
	3-position	All ports closed	0.92	0.34	1.0 -	0.16 -
		ABR connection	0.92	0.29	1.1 (0.69)	0.13 (0.22)
		PAB connection	1.1	0.35	1.1 -	0.17 -
MN3GA2 MN4GA2	Two 3-port valves integrated		1.7	0.37	2.2 (1.6)	0.13 (0.21)
	2-position		2.2	0.21	2.5 (1.7)	0.19 (0.10)
	3-position	All ports closed	2.0	0.25	2.3 -	0.10 -
		ABRConnection	2.0	0.27	2.5 (1.7)	0.18 (0.12)
		PAB connection	2.3	0.31	2.3 -	0.16 -

*1: Effective cross-sectional area S and sonic conductance C are converted as S ≈ 5.0 x C.
*2: Values in ( ) are with built-in exhaust check valve.

Ozone-proof specifications • Coolant proof specifications

Can be selected with “How to order” Item Ⓔ option “A” on page 232.

Clean-room specifications

● Anti-dust generation structure for use in cleanrooms

** - Voltage - **P7***

Specifications for rechargeable battery

(Catalog No. CC-1226A)

● For use in the rechargeable battery manufacturing process, materials used for air path and sliding section are limited

** - Voltage - **P4**

CE marking specifications

** - Voltage - **ST**

• Standard voltage of 24 VDC or less is CE marking-compatible even if the model No. is not indicated with "ST".

How to order

Manifold model No.

MN4GA1 1 0 R - C6 - E2 H - 10 - 3

3-port manifold model No.

MN3GA1 1 0 R - C6 - E2 H - 10 - 3

Discrete valve block with solenoid valve

N4GA1 1 0 R - C6 - E2 H — 3

Discrete 3-port valve block with solenoid valve

N3GA1 1 0 R - C6 - E2 H — 3

Single solenoid valve

4GA1 1 9 R - C6 - E2 H — 3

Discrete 3-port solenoid valve

3GA1 1 9 R - C6 - E2 H — 3

Ⓐ Model No.

Ⓑ Solenoid position

Ⓒ Port size (*1)

Ⓓ Electrical connections

Ⓔ Option

Ⓕ Station No.

Ⓖ Voltage

Code	Description		Ⓐ Model No. Manifold: 3-port valve MN3GA1	MN3GA2	5-port valve MN4GA1	MN4GA2	Discrete valve black with solenoid valve/ Discrete solenoid valve (N)3GA1	(N)3GA2	(N)4GA1	(N)4GA2
Ⓑ Solenoid position										
1	2 position single				●	●			●	●
2	2-position double				●	●			●	●
3	3-position all ports closed				●	●			●	●
4	3-position ABR connection				●	●			●	●
5	3-position PAB connection				●	●			●	●
1	2-position single normally closed	(*2)	●	●			●	●		
11	2-position single normally open	(*2)	●	●			●	●		
66	3-port valve Two valves integrated (*2)(*3)	A side valve: Normally closed B side valve: Normally closed	●	●			●	●		
67		A side valve: Normally closed B side valve: Normally open	●	●			●	●		
76		A side valve: Normally open B side valve: Normally closed	●	●			●	●		
77		A side valve: Normally open B side valve: Normally open	●	●			●	●		
8	Mix manifold (when there are multiple solenoid positions)		●	●	●	●	●	●	●	●
Ⓒ Port size (port A/B)										
Type	Metric fitting/Rc thread									
CF	ø1.8 barbed fitting (compatible tube UP-9102-**)		●		●		●		●	
C18	ø1.8 push-in fitting (compatible tube UP-9402-**)		●		●		●		●	
C4	ø4 push-in fitting		●	●	●	●	●	●	●	●
C6	ø6 push-in fitting		●	●	●	●	●	●	●	●
C8	ø8 push-in fitting			●		●		●		●
CX	Push-in fitting mix	(*4)	●	●	●	●				
M5	M5		●		●		●		●	
06	Rc1/8			●		●		●		●
Type	Inch fitting/inch thread									
C3N	ø1/8" push-in fitting		●		●		●		●	
C4N	ø5/32" push-in fitting		●		●		●		●	
C6N	ø1/4" push-in fitting			●		●		●		●
C8N	ø5/16" push-in fitting			●		●		●		●
CXN	Push-in fitting mix	(*4)	●	●	●	●				
06 N	NPT1/8			●		●		●		●
Type	G thread									
06G	G1/8			●		●		●		●
Ⓓ Electrical connections										
Refer to the following page for electrical connections										
Ⓔ Option										
Blank	Manual override of non-locking/locking common		●	●	●	●	●	●	●	●
M	Manual override of non-locking		●	●	●	●	●	●	●	●
H	With exhaust check valve	(*5)	●	●	●	●	●	●	●	●
K	External pilot	(*6)	●	●	●	●	●	●	●	●
A	Ozone/coolant proof product		●	●	●	●	●	●	●	●
S	Surgeless	(*7)	●	●	●	●	●	●	●	●
E	Low exoergic/energy saving circuit	(*7)(*8)	●	●	●	●	●	●	●	●
F	Port A/B filter built in	(*9)	●	●	●	●	●	●	●	●
Z1	Air supply spacer	(*10)	●	●	●	●				
Z2	In-stop valve spacer	(*10)(*11)	●	●	●	●				
Z3	Exhaust spacer	(*10)	●	●	●	●				
Ⓕ Station No.										
1	1 stations		●	●	●	●				
to	to									
24	24 stations (Max. station number for MN3GA2/MN4GA2 is 20.)									
Ⓖ Voltage										
1	100 VAC (rectifier integrated)		●	●	●	●	●	●	●	●
2	200 VAC (rectifier integrated)		●	●	●	●	●	●	●	●
3	24 VDC		●	●	●	●	●	●	●	●
4	12 VDC		●	●	●	●	●	●	●	●
7	3 VDC		○	○	○	○	○	○	○	○
8	5 VDC		○	○	○	○	○	○	○	○

is not available.
○ indicates made to order.

⚠ Precautions for model selection

*1 : Specify the P/R port bore size with the supply and exhaust block model No. in the manifold specifications sheet.
*2 : Select MN4GA*80 when mixing with 4, 5-port valves. Further, select MN3GA*80 when mixing with masking plate.
*3 : Not compatible with combination with external pilot (K).
Dimensions are the same as those of the respective 2-position double solenoid.
*4 : The push-in fitting cannot be mixed with the discrete valve's 4(A) or 2(B) port.
*5 : 3-position all ports closed and PAB connection are not provided with the exhaust check valve (H). Refer to page 851 for details on the exhaust check valve.
*6 : Contact CKD when using a vacuum with the external pilot (K).
7 : E2 type and E2*J type connectors only support 12/24 VDC.
In addition, surgeless "S" and low exoergic/energy circuit "E" cannot be selected together.
*8 : Surgeless specifications.
*9 : A filter is built into the P port as standard.
*10 : Specify the spacer mounting position and quantity in manifold specifications sheet. Stacking of spacers is not possible. Combination with the masking plate is not supported. Refer to pages 297 to 310 for details.
*11 : Not compatible with combination with external pilot (K).

[Electrical connection list]

Ⓓ Electrical connections		Ⓐ Model No.							
		Manifold				Discrete valve black with solenoid valve/ Discrete solenoid valve			
		3-port valve		5-port valve					
		MN3GA1	MN3GA2	MN4GA1	MN4GA2	(N)3GA1	(N)3GA2	(N)4GA1	(N)4GA2
Blank	Grommet lead wire (300 mm) (*12)	●	●	●	●	●	●	●	●
B	DIN terminal box (Pg7) With surge suppressor/lamp (*13) (*15)		●		●		●		●
BN	DIN terminal box (Pg7) (Without terminal box) With surge suppressor (*13) (*15)		●		●		●		●
E-connector (upward/lateral common)									
E0	Lead wire (300 mm) (*14)	●	●	●	●	●	●	●	●
E00	Lead wire (500 mm) (*14)	●	●	●	●	●	●	●	●
E01	Lead wire (1000 mm) (*14)	●	●	●	●	●	●	●	●
E02	Lead wire (2000 mm) (*14)	●	●	●	●	●	●	●	●
E03	Lead wire (3000 mm) (*14)	●	●	●	●	●	●	●	●
E0N	Without lead wire (without socket) (*14)	●	●	●	●	●	●	●	●
E1	Without lead wire (socket/terminal attached) (*14)	●	●	●	●	●	●	●	●
E2	Lead wire (300 mm), surge suppressor/indicator lamp	●	●	●	●	●	●	●	●
E20	Lead wire (500 mm), surge suppressor/indicator lamp	●	●	●	●	●	●	●	●
E21	Lead wire (1000 mm), surge suppressor/indicator lamp	●	●	●	●	●	●	●	●
E22	Lead wire (2000 mm), surge suppressor/indicator lamp	●	●	●	●	●	●	●	●
E23	Lead wire (3000 mm), surge suppressor/indicator lamp	●	●	●	●	●	●	●	●
E2N	No lead wire (without socket), surge suppressor/indicator lamp	●	●	●	●	●	●	●	●
E3	No lead wire (with socket/terminal) , surge suppressor/indicator lamp	●	●	●	●	●	●	●	●
EJ type connector (socket with cover, upward/lateral common)									
E01J	Lead wire (1000 mm) (*14)	●	●	●	●	●	●	●	●
E02J	Lead wire (2000 mm) (*14)	●	●	●	●	●	●	●	●
E03J	Lead wire (3000 mm) (*14)	●	●	●	●	●	●	●	●
E21J	Lead wire (1000 mm), surge suppressor/indicator lamp	●	●	●	●	●	●	●	●
E22J	Lead wire (2000 mm), surge suppressor/indicator lamp	●	●	●	●	●	●	●	●
E23J	Lead wire (3000 mm), surge suppressor/indicator lamp	●	●	●	●	●	●	●	●

*12: The grommet lead wire specifications are compatible with DC voltage only.
*13: AC voltages and 12/24 VDC are supported. In addition, a lamp comes with the terminal box.
*14: AC voltage includes a rectifier circuit.
*15: The terminal box conforms to EN175301-803 Type C (former DIN 43650-C). Refer to pages 856 and 857 for details.

Electrical connections

Discrete valve/individual wiring manifold

Blank Grommet lead wire

● **Lead wire length**
300 mm

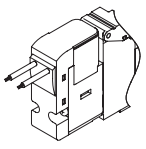

E1 E3 E-connector with socket/terminal

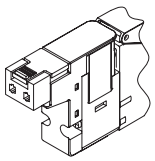

E0 E2 E-connector

● **Lead wire length**
300 mm
500 mm
1 m
2 m
3 m

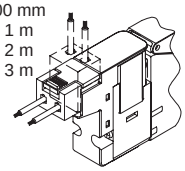

B DIN terminal box

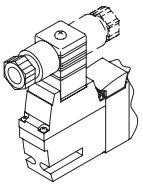

E0N E2N E-connector without socket

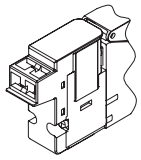

BN DIN terminal box without terminal box

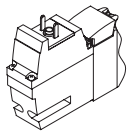

E0*J E2*J EJ type connector

● **Lead wire length**
1 m
2 m
3 m

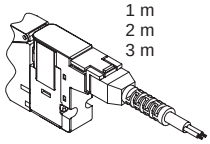

Manifold components explanation and parts list

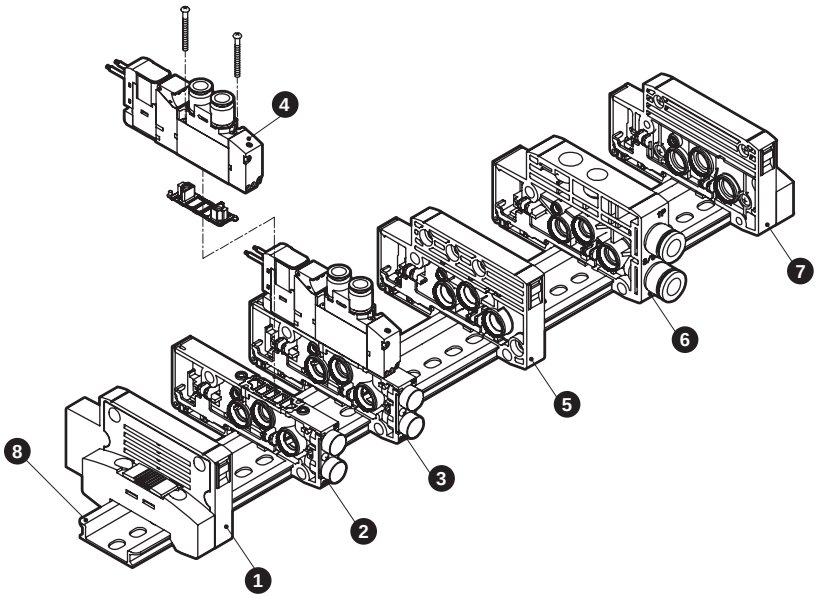

List of main components (refer to pages 286 to 305 for details)

No.	Component name	Model No. (example)	No.	Component name	Model No. (example)
1	End block L	N4G1R-EL	5	Partition block	N4G1R-S
2	Discrete valve block	N4GA1R-V1	6	Supply and exhaust block	N4G1R-Q-8
3	Discrete valve block with solenoid valve	N4GA110R-C6-H-3	7	End block R	N4G1R-ER
4	Solenoid valve body	4GA119R-C6-H-3	8	DIN rail	N4GR-BAA (Length)

A type individual wiring weight

4GA1 (g)

Part name	Model No.	Weight	Part name	Model No.	Weight
Valve block with solenoid valve	N3GA110R-C6-3	70	Supply and exhaust block	N4G1R-Q-8	58
	N3GA1110R-C6-3	70		N4G1R-QK-8	60
	N4GA110R-C6-3	70	End block	N4G1R-E*	60
	N4GA120R-C6-3	87		N4G1R-EX*	60
	N4GA1 $^{3}_{5}$ 0R-C6-3	91	Partition block	N4G1R-S	45
	N3GA1660R-C6-3	87	Valve block	N4GA1R-V1	28
Valve block with masking plate	N4GA1R-MP	34	DIN rail	N4GR-BAA (Length)	0.19/mm

4GA2 (g)

Part name	Model No.	Weight	Part name	Model No.	Weight
Valve block with solenoid valve	N3GA210R-C8-3	129	Supply and exhaust block	N4G2R-Q-10	83
	N3GA2110R-C8-3	129		N4G2R-QK-10	85
	N4GA210R-C8-3	129	End block	N4G2R-E*	84
	N4GA220R-C8-3	147		N4G2R-EX*	85
	N4GA2 $^{3}_{5}$ 0R-C8-3	159	Partition block	N4G2R-S	60
	N3GA2660R-C8-3	147	Valve block	N4GA2R-V1	53
Valve block with masking plate	N4GA2R-MP	66	DIN rail	N4GR-BAA (Length)	0.19/mm

Parts list

Applicable	Part name	Model No.	Applicable	Part name	Model No.
Valve 4G1	Cartridge fitting ø1.8 barbed	4G1R-JOINT-CF	Common	Coil assembly	4GR-[*1]-[*2]-COIL-[*3] *1: Electrical connections (blank, B, E0, ...), *3: Voltage (1, 2, 3, 4) *2: Ozone/coolant proof (blank, A) Surgeless (S) Low exoergic/energy circuit (E) External pilot (K)
	Cartridge fitting ø1.8 straight	4G1R-JOINT-C18			
	Cartridge fitting ø4 straight	4G1R-JOINT-C4			
	Cartridge fitting ø6 straight	4G1R-JOINT-C6			
	Cartridge fitting ø1/8” straight	4G1R-JOINT-C3N		E-connector socket assembly	4GR-SOCKET-ASSY-[*1]-[*3] *1: Electrical connections (E0, E00...), *3: Voltage (1, 3, 4)
	Cartridge fitting ø5/32” straight	4G1R-JOINT-C4N			
	Plug cartridge	4G1R-JOINT-CPG			
Valve 4G2	Cartridge fitting ø4 straight	4G2R-JOINT-C4		EJ type connector socket assembly	4GR-SOCKET-ASSY-[*1] *1: Electrical connections (E01J, E02J, ...)
	Cartridge fitting ø6 straight	4G2R-JOINT-C6			
	Cartridge fitting ø8 straight	4G2R-JOINT-C8	Valve 4G2	DIN terminal box assembly	4GR-TERMINAL-BOX-[*3] *3: Voltage (1, 2, 3, 4)
	Cartridge fitting ø1/4” straight	4G2R-JOINT-C6N			
	Cartridge fitting ø5/16” straight	4G2R-JOINT-C8N			
	Plug cartridge	4G2R-JOINT-CPG			

Dimensions CAD

MN4GA1

* For the 2-position single 3-port valve, either A port or B port is a plug. In addition, the two 3-port valve integrated has the same dimensions as the double model.

● Grommet lead wire (blank)

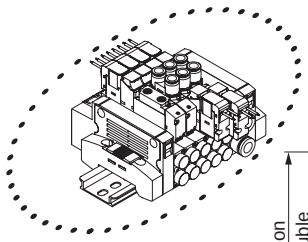

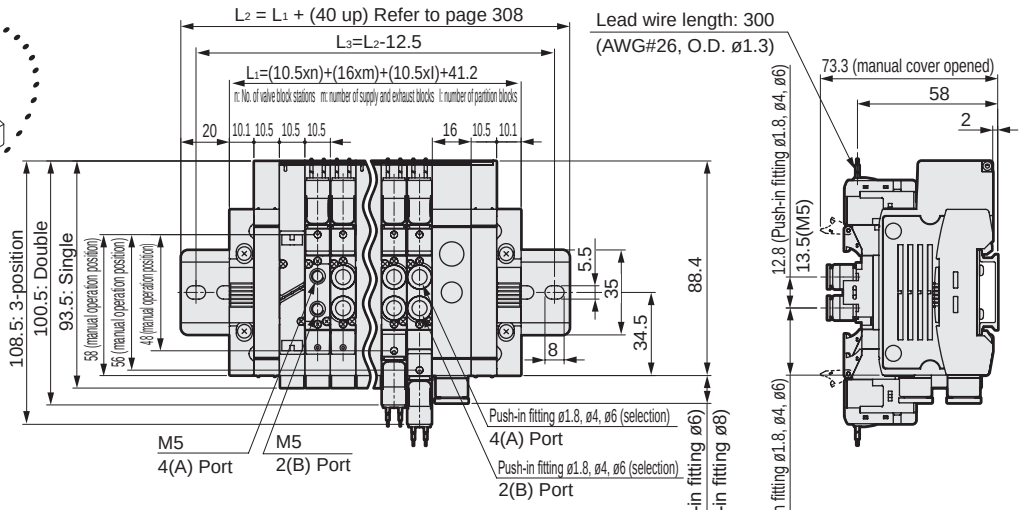

Push-in fitting bore size	* Dimensions
ø1.8	65.1
ø4	69.1
ø6	70.3
ø1/8”	69.6
ø5/32”	69.1

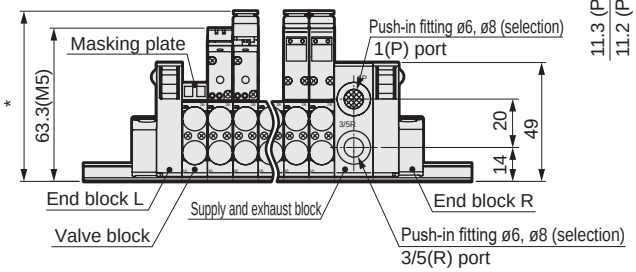

● ø1.8 barbed fitting (CF)

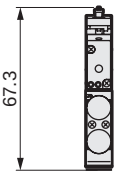

● E-connector (E)

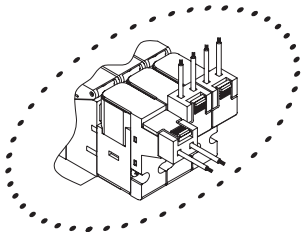

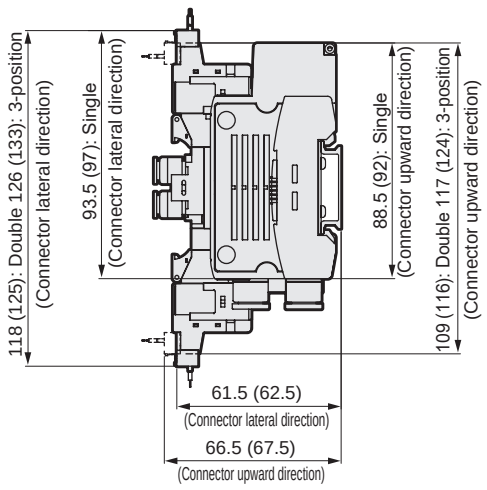

Note: Values in ( ) are for AC voltage.

● EJ type connector (E**J)

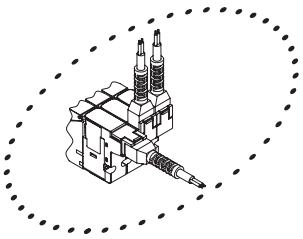

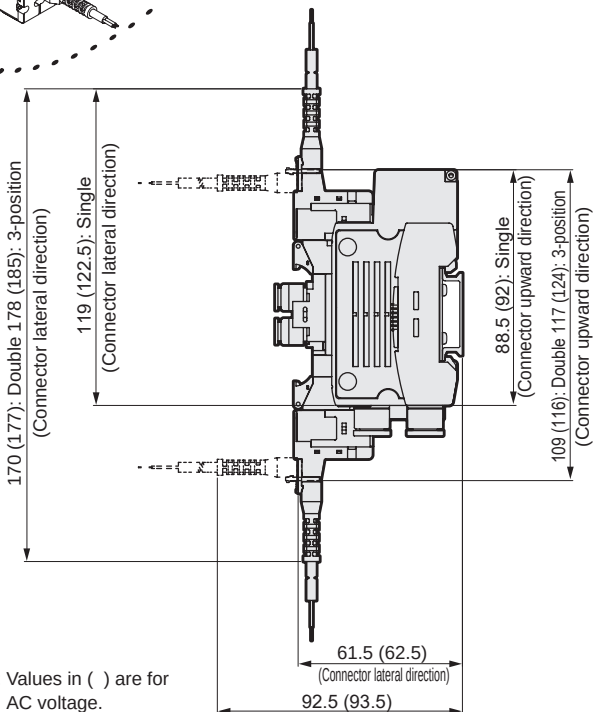

Note: Values in ( ) are for AC voltage.

* Refer to page 261 for dimensions of the supply and exhaust block push-in fitting.

Dimensions CAD

MN4GA2

● Grommet lead wire (blank)

* For the 2-position single 3-port valve, either A port or B port is a plug.
In addition, the two 3-port valve integrated have the same dimensions as the double model.

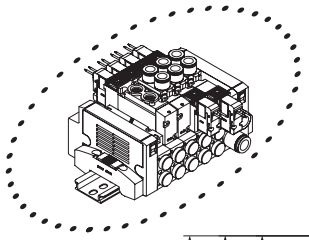

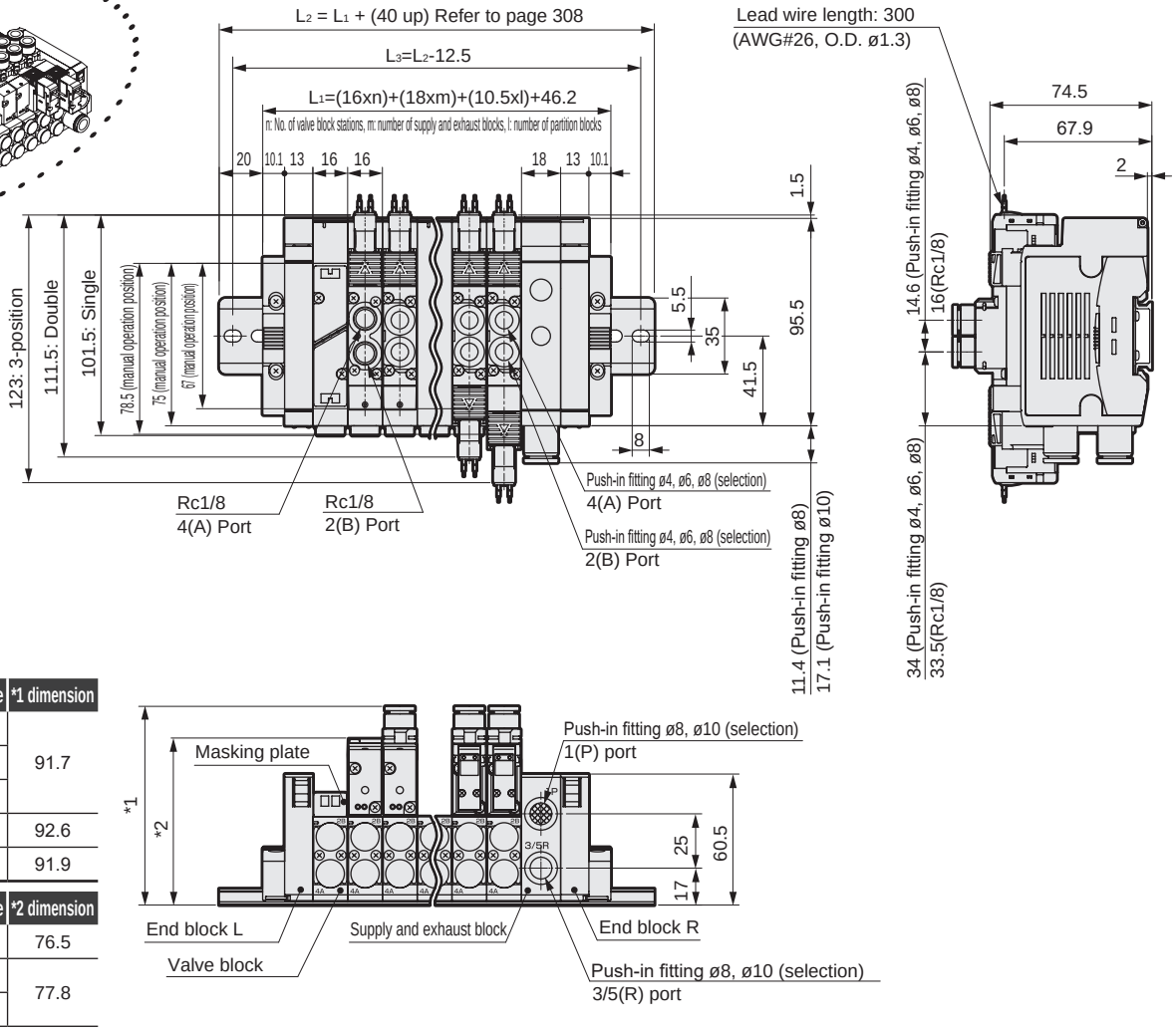

Push-in fitting bore size	*1 dimension
ø4	91.7
ø6	
ø8	
ø1/4”	92.6
ø5/16”	91.9

Female thread bore size	*2 dimension
Rc1/8	76.5
NPT1/8	77.8
G1/8	

Dimensions

● E-connector (E)

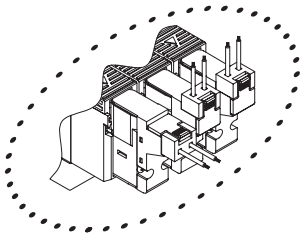

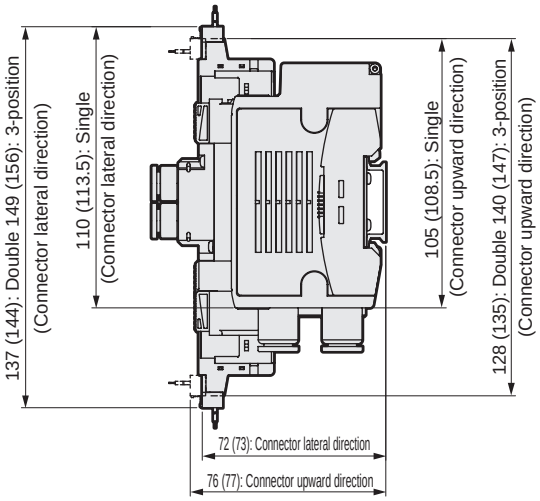

Note: Values in ( ) are for AC voltage.

● EJ-connector (E**J)

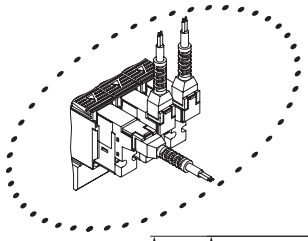

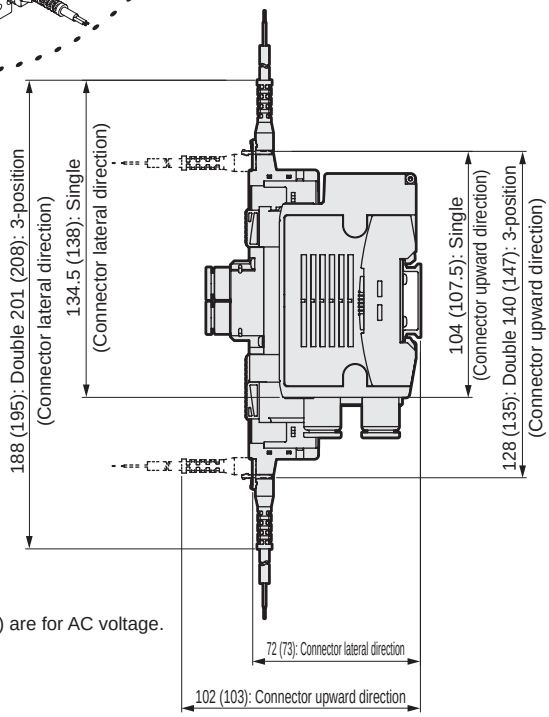

Note: Values in ( ) are for AC voltage.

● DIN terminal box (B)

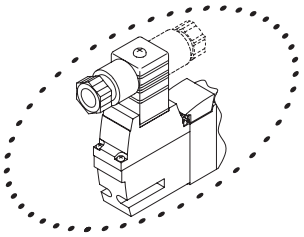

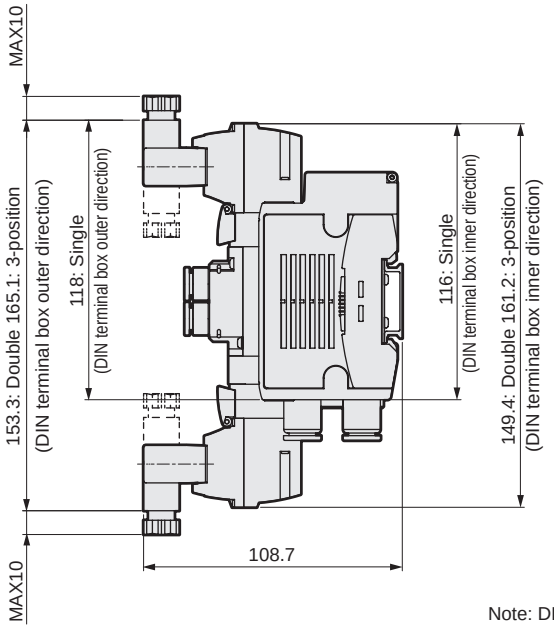

Note: DIN terminal box assembly is shipped facing inward.

* Refer to page 261 for dimensions of the supply and exhaust block push-in fitting.

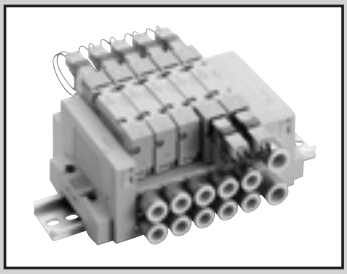

Individual wiring block manifold
Base piping

MN4GB1/2 Series

● Cylinder bore size: ø20 to ø80

JIS symbol

● 3-port valve

2-position single NC

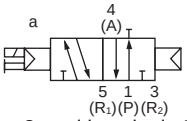

2-position single NO

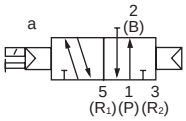

● Two 3-port valves integrated

(A side valve: NC, B side valve: NC)

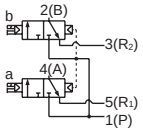

(A side valve: NC, B side valve: NO)

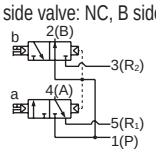

(A side valve: NO, B side valve: NC)

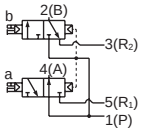

(A side valve: NO, B side valve: NO)

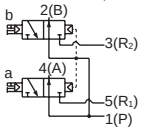

● 5-port valve

2-position single

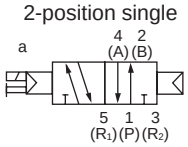

2-position double

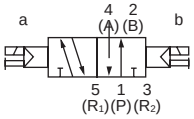

3-position all ports closed

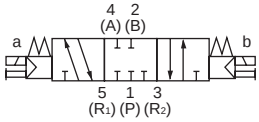

3-position A/B/R connection

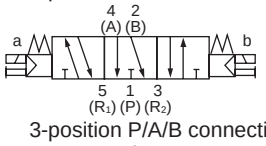

3-position P/A/B connection

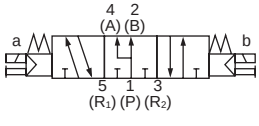

Manifold common specifications

Item	Description
Manifold	Block manifold
Mounting method	DIN rail mount
Supply and exhaust method	Common supply/common exhaust (With internal exhaust check valve)
Pilot exhaust method	Main valve/pilot valve common exhaust (Pilot exhaust check valve built-in)
Piping direction	Lateral direction from base
Valve and operation	Pilot operated soft spool valve
Working fluid	Compressed air
Max. working pressure MPa	0.7 (≈100 psi, 7 bar)
Min. working pressure MPa	0.2 (≈29 psi, 2 bar) (*3)
Proof pressure MPa	1.05 (≈150 psi, 10.5 bar)
Ambient temperature °C	-5 (23°F) to 55 (131°F) (no freezing)
Fluid temperature °C	5 (41°F) to 55 (131°F)
Manual override	Non-locking/locking common type (standard)
Lubrication (*1)	Not required
Degree of protection (*2)	Dust-proof
Vibration resistance m/s²	50 or less
Shock resistance m/s²	300 or less
Atmosphere	Cannot be used in corrosive gas environments

*1 Use turbine oil Class 1 ISO VG32 for lubrication.
Excessive or intermittent lubrication results in unstable operation.

*2 Avoid dripping water or oil, etc., during use. IP65 (jet-proof) applies for DIN terminal box specifications. However, the specified outer diameter of the applicable cord and tightening torque must be used for fixing in place.

*3 The working pressure range is 0 to 0.7 MPa when the external pilot (option code: K) is selected. Set the external pilot pressure between 0.2 and 0.7 MPa.

Electrical specifications

Item		Description					
Rated voltage V		24 DC	12 DC	5 DC	3 DC	100 AC	200 AC
Voltage fluctuation range		±10%					
Holding current A (*4)	Standard	0.015 (0.017)	0.030 (0.034)	0.072 (0.082)	0.120 (0.136)	0.009 (0.009)	0.006 (0.006)
	With low exoergic/energy circuit	0.005	0.010	-		-	
Power consumption W (*4)	Standard	0.35(0.40)		0.35(0.40)		-	
	With low exoergic/energy circuit	0.1		-		-	
Apparent power VA (*4)	Standard	-		-		0.93 (0.98)	1.20 (1.40)
Thermal class		B					
Surge suppressor		Option					
Indicator		Lamp (option)					

*4: Values in ( ) apply when lamp is included. In addition, the type with low exoergic/energy circuit is only available with lamp.

Individual specifications

Descriptions			MN3GB1/MN4GB1	MN3GB2/MN4GB2
Max. station No.			24 stations	20 stations
Port size	Metric fitting	A/B port	Barbed fitting ø1.8 Push-in fitting ø1.8, ø4, ø6	Push-in fitting ø4, ø6, ø8
		P/R-port	Push-in fitting ø6, ø8	Push-in fitting ø8, ø10
	Inch fitting	A/B port	Push-in fitting ø1/8", ø5/32"	Push-in fitting ø1/4", ø5/16"
		P/R-port	Push-in fitting ø1/4", ø5/16"	Push-in fitting ø5/16", ø3/8"

· For DIN rail mounting, refer to "Mounting orientation" on page 855.
· For weight, refer to page 242.

Performance/characteristics by model

Descriptions			MN3GB1/MN4GB1		MN3GB2/MN4GB2	
			ON	OFF	ON	OFF
Response time ms	Two 3-port valves integrated		9	12	12	29
	2-position	Single	12	12	19	19
		Double	9	-	18	-
	3-position	ABR connection	8	15	17	30

Values with lamp/surge suppressor are shown. The response times are values with supply pressure of 0.5 MPa at 20°C and without lubrication. They depend on the pressure and the lubricant quality.

Flow characteristics

Model No.	Solenoid position		P→A/B		A/B→R1/R2	
			C[dm³/(s·bar)]	b	C[dm³/(s·bar)]	b
MN3GB1 MN4GB1	Two 3-port valves integrated		0.86	0.35	1.0 (0.66)	0.15 (0.25)
	2-position		1.0	0.30	1.1 (0.72)	0.11 (0.26)
	3-position	All ports closed	0.96	0.32	1.0 -	0.14 -
		ABR connection	0.96	0.29	1.2 (0.71)	0.11 (0.30)
		PAB connection	1.1	0.31	1.0 -	0.15 -
MN3GB2 MN4GB2	Two 3-port valves integrated		1.7	0.42	2.2 (1.6)	0.15 (0.19)
	2-position		2.4	0.35	2.5 (1.7)	0.19 (0.19)
	3-position	All ports closed	2.2	0.38	2.3 -	0.17 -
		ABRConnection	2.2	0.38	2.5 (1.7)	0.18 (0.20)
		PAB connection	2.3	0.29	2.3 -	0.15 -

*1: Effective cross-sectional area S and sonic conductance C are converted as S ≈ 5.0 x C.
*2: Values in ( ) are with the exhaust check valve.

Ozone-proof specifications • Coolant proof specifications

Can be selected with ”How to order” Item Ⓔ option “A” on page 241.

Clean-room specifications

● Anti-dust generation structure for use in cleanrooms

** - Voltage - **P7***

Specifications for rechargeable battery

(Catalog No. CC-1226A)

● For use in the rechargeable battery manufacturing process, materials used for air path and sliding section are limited

** - Voltage - **P4**

CE marking specifications

** - Voltage - **ST**

•Standard voltage of 24 VDC or less is CE marking-compatible even if the model No. is not indicated with "ST".

MN4GB1/2 Series

Individual wiring block manifold; base piping

How to order

Manifold model No.

MN4GB1 1 0 R - C6 - E2 H - 10 - 3

3-port manifold model No.

MN3GB1 66 0 R - C6 - E2 H - 10 - 3

Discrete valve block with solenoid valve

N4GB1 1 0 R - C6 - E2 H — 3

Discrete 3-port valve block with solenoid valve

N3GB1 66 0 R - C6 - E2 H — 3

Discrete solenoid valve

4GB1 1 9 R - 00 - E2 H — 3

Discrete 3-port solenoid valve

3GB1 66 9 R - 00 - E2 H — 3

Ⓐ Model No.
Ⓑ Solenoid position
Ⓒ Port size (*1) (*2) (*3)
Ⓓ Electrical connections
Ⓔ Option
Ⓕ Station No.
Ⓖ Voltage

Precautions for model selection

*1 A and B port plug specifications are available for the 2-position single only.
Specify the P/R-port bore size with the supply and exhaust block model No. in the manifold specifications sheet.
*2 Ports A/B are the same size in the push-in L-fitting mix (CX).
*3 For a discrete solenoid valve, select “00” for Port size.
*4 Select MN4GB*80R when mixing with 4, 5-port valves. Further, select MN3GB*80R when mixing with masking plate.
*5 Not compatible with combination with external pilot (K). Dimensions are the same as those of the respective 2-position double solenoid.
*6 Simultaneously select option “L” for types other than single solenoid.
*7 The push-in fitting cannot be mixed with the discrete valve’s 4(A) or 2(B) port.

Code	Content		Ⓐ Model No.							
			Manifold				Discrete valve block with solenoid valve/ discrete solenoid valve			
			Two 3-port valves integrated		5-port valve					
			MN3GB1	MN3GB2	MN4GB1	MN4GB2	(N)3GB1	(N)3GB2	(N)4GB1	(N)4GB2
Ⓑ Solenoid position										
1	2-position single				●	●			●	●
2	2-position double				●	●			●	●
3	3-position all ports closed				●	●			●	●
4	3-position ABR connection				●	●			●	●
5	3-position PAB connection				●	●			●	●
66	Two 3-port valves integrated (*4) (*5)	A side valve: Normally closed B side valve: Normally closed	●	●			●	●		
67		A side valve: Normally closed B side valve: Normally open	●	●			●	●		
76		A side valve: Normally open B side valve: Normally closed	●	●			●	●		
77		A side valve: Normally open B side valve: Normally open	●	●			●	●		
8	Mix manifold (for multiple solenoid positions)		●	●	●	●	●	●	●	●
Ⓒ Port size (A/B-port)										
Type	**Metric fitting/Rc thread**									
CF	ø1.8 barbed fitting (compatible tube UP-9102-**)		●	●	●		●		●	
C18	ø1.8 push-in fitting (compatible tube UP-9402-**)		●	●	●		●		●	
C4	ø4 push-in fitting		●	●	●	●	●	●	●	●
C6	ø6 push-in fitting		●	●	●	●	●	●	●	●
C8	ø8 push-in fitting			●		●		●		●
CL18	ø1.8 push-in L-fitting upward (compatible tube UP-9402-**)	(*6)	●		●		●		●	
CL4	ø4 push-in L-fitting (upward)	(*6)	●		●		●		●	
CL6	ø6 push-in L-fitting (upward)	(*6)	●	●	●	●	●	●	●	●
CL8	ø8 push-in L-fitting (upward)	(*6)		●		●		●		●
CD18	ø1.8 push-in L-fitting downward (compatible tube UP-9402-**)		●		●		●		●	
CD4	ø4 push-in L-fitting (downward)		●		●		●		●	
CD6	ø6 push-in L-fitting (downward)		●	●	●	●	●	●	●	●
CD8	ø8 push-in L-fitting (downward)			●		●		●		●
CX	Push-in fitting mix	(*7)	●	●	●	●				
Single, plug specs	A port	B port								
CFNC	ø1.8 barbed fitting (compatible tube UP-9102-**)	Plug			●				●	
C18NC	ø1.8 push-in fitting (compatible tube UP-9402-**)	Plug			●				●	
C4NC	ø4 push-in fitting	Plug			●	●			●	●
C6NC	ø6 push-in fitting	Plug			●	●			●	●
C8NC	ø8 push-in fitting	Plug				●				●
CFNO	Plug	ø1.8 barbed fitting (compatible tube UP-9102-**)			●				●	
C18NO	Plug	ø1.8 push-in fitting (compatible tube UP-9402-**)			●				●	
C4NO	Plug	ø4 push-in fitting			●	●			●	●
C6NO	Plug	ø6 push-in fitting			●	●			●	●
C8NO	Plug	ø8 push-in fitting				●				●
CL18NC	ø1.8 push-in L-fitting upward (compatible tube UP-9402-**)	Plug			●				●	
CL4NC	ø4 push-in L-fitting (upward)	Plug			●				●	
CL6NC	ø6 push-in L-fitting (upward)	Plug			●	●			●	●
CL8NC	ø8 push-in L-fitting (upward)	Plug				●				●
CL18NO	Plug	ø1.8 push-in L-fitting upward (compatible tube UP-9402-**)			●				●	
CL4NO	Plug	ø4 push-in L-fitting (upward)			●				●	
CL6NO	Plug	ø6 push-in L-fitting (upward)			●	●			●	●
CL8NO	Plug	ø8 push-in L-fitting (upward)				●				●
CD18NC	ø1.8 push-in L-fitting downward (compatible tube UP-9402-**)	Plug			●				●	
CD4NC	ø4 push-in L-fitting (downward)	Plug			●				●	
CD6NC	ø6 push-in L-fitting (downward)	Plug			●	●			●	●
CD8NC	ø8 push-in L-fitting (downward)	Plug				●				●
CD18NO	Plug	ø1.8 push-in L-fitting downward (compatible tube UP-9402-**)			●				●	
CD4NO	Plug	ø4 push-in L-fitting (downward)			●				●	
CD6NO	Plug	ø6 push-in L-fitting (downward)			●	●			●	●
CD8NO	Plug	ø8 push-in L-fitting (downward)				●				●
Type	**Inch fitting/inch thread**									
C3N	ø1/8” push-in fitting		●		●		●		●	
C4N	ø5/32” push-in fitting		●		●		●		●	
C6N	ø1/4” push-in fitting			●		●		●		●
C8N	ø5/16” push-in fitting			●		●		●		●
CL3N	ø1/8” push-in L-fitting (upward)		○		○		○		○	
CL4N	ø5/32” push-in L-fitting (upward)		○		○		○		○	
CL6N	ø1/4” push-in L-fitting (upward)			○		○		○		○
CL8N	ø5/16” push-in L-fitting (upward)			○		○		○		○
CXN	Push-in fitting mix	(*7)	●	●	●	●				
Single, plug specs	A port	B port								
C3NCN	ø1/8” push-in fitting	Plug			●				●	
C4NCN	ø5/32” push-in fitting	Plug			●				●	
C6NCN	ø1/4” push-in fitting	Plug				●				●
C8NCN	ø5/16” push-in fitting	Plug				●				●
C3NON	Plug	ø1/8” push-in fitting			●				●	
C4NON	Plug	ø5/32” push-in fitting			●				●	
C6NON	Plug	ø1/4” push-in fitting				●				●
C8NON	Plug	ø5/16” push-in fitting				●				●
CL3NCN	ø1/8” push-in L-fitting (upward)	Plug			○				○	
CL4NCN	ø5/32” push-in L-fitting (upward)	Plug			○				○	
CL6NCN	ø1/4” push-in L-fitting (upward)	Plug				○				○
CL8NCN	ø5/16” push-in L-fitting (upward)	Plug				○				○
CL3NON	Plug	ø1/8” push-in L-fitting (upward)			○				○	
CL4NON	Plug	ø5/32” push-in L-fitting (upward)			○				○	
CL6NON	Plug	ø1/4” push-in L-fitting (upward)				○				○
CL8NON	Plug	ø5/16” push-in L-fitting (upward)				○				○
00	Discrete valve for mounting base						●	●	●	●

is not available. ○ indicates a custom order.

[Options, stations, voltage, electrical connection list]

Code	Description	Model No. A: Manifold, 3-port valve Two valves integrated: MN3GB1	MN3GB2	Manifold, 5-port valve: MN4GB1	MN4GB2	Discrete valve block with solenoid valve/ discrete solenoid valve: (N)3GB1	(N)3GB2	(N)4GB1	(N)4GB2
D Electrical connections									
Blank	Grommet lead wire (300 mm) (*15)	●	●	●	●	●	●	●	●
B	DIN terminal box (Pg 7) Surge suppressor with / lamp (*16) (*19) (*21)		●		●		●		●
BN	DIN terminal box (Pg7) (without terminal box) with surge suppressor and indicator lamp(*16) (*19) (*21)		●		●		●		●
E-connector (upward/lateral direction common)									
E0	Lead wire (300 mm) (*17)	●	●	●	●	●	●	●	●
E00	Lead wire (500 mm) (*17)	●	●	●	●	●	●	●	●
E01	Lead wire (1000 mm) (*17)	●	●	●	●	●	●	●	●
E02	Lead wire (2000 mm) (*17)	●	●	●	●	●	●	●	●
E03	Lead wire (3000 mm) (*17)	●	●	●	●	●	●	●	●
E0N	Without lead wire (without socket) (*17)	●	●	●	●	●	●	●	●
E1	Without lead wire (with socket/terminal) (*17)	●	●	●	●	●	●	●	●
E2	Lead wire (300 mm) with surge suppressor and indicator lamp	●	●	●	●	●	●	●	●
E20	Lead wire (500 mm) with surge suppressor and indicator lamp	●	●	●	●	●	●	●	●
E21	Lead wire (1000 mm) with surge suppressor and indicator lamp	●	●	●	●	●	●	●	●
E22	Lead wire (2000 mm) with surge suppressor and indicator lamp	●	●	●	●	●	●	●	●
E23	Lead wire (3000 mm) with surge suppressor and indicator lamp	●	●	●	●	●	●	●	●
E2N	Without lead wire (without socket) with surge suppressor and indicator lamp	●	●	●	●	●	●	●	●
E3	Without lead wire (with socket/terminal)with surge suppressor and indicator lamp	●	●	●	●	●	●	●	●
EJ-connector (socket with cover, upward/lateral direction common)									
E01J	Lead wire (1000 mm) (*17)	●	●	●	●	●	●	●	●
E02J	Lead wire (2000 mm) (*17)	●	●	●	●	●	●	●	●
E03J	Lead wire (3000 mm) (*17)	●	●	●	●	●	●	●	●
E21J	Lead wire (1000 mm) with surge suppressor and indicator lamp	●	●	●	●	●	●	●	●
E22J	Lead wire (2000 mm) with surge suppressor and indicator lamp	●	●	●	●	●	●	●	●
E23J	Lead wire (3000 mm) with surge suppressor and indicator lamp	●	●	●	●	●	●	●	●
E Option									
Blank	Manual override of non-locking/locking common	●	●	●	●	●	●	●	●
M	Manual override of non-locking	●	●	●	●	●	●	●	●
H	With exhaust check valve (*8)	●	●	●	●	●	●	●	●
K	External pilot (*9)			●	●			●	●
A	Ozone/coolant proof	●	●	●	●	●	●	●	●
S	Surgeless (*10)	●	●	●	●	●	●	●	●
E	Low exoergic/energy saving circuit (*10) (*11)	●	●	●	●	●	●	●	●
L	With pipe adaptor	●	●	●	●	●	●	●	●
F	Port A/B filter built in (*12)	●	●	●	●	●	●	●	●
X	Non-locking exhaust structure (*20)			●	●				
X1	Locking residual pressure dischargerconfiguration (*20)			●	●				
Z1	Air supply spacer (*13)	●	●	●	●				
Z2	In-stop valve spacer (*13) (*14)	●	●	●	●				
Z3	Exhaust spacer (*13)	●	●	●	●				
Z6	Spacer pilot check valve (*13) (*18)			●	●				
F Station No.									
1	One station	●	●	●	●				
to	to								
24	24 stations (max. station No. for MN4GB2 is 20)								
G Voltage									
1	100 VAC (rectifier integrated)	●	●	●	●	●	●	●	●
2	200 VAC (rectifier integrated)	●	●	●	●	●	●	●	●
3	24 VDC	●	●	●	●	●	●	●	●
4	12 VDC	●	●	●	●	●	●	●	●
7	3 VDC	○	○	○	○	○	○	○	○
8	5 VDC	○	○	○	○	○	○	○	○

is not available.
○ indicates made to order.

***8 3-position all ports closed and P A B connection are not provided with the exhaust check valve specifications (H). Refer to page 851 for details on the exhaust check valve.**
*9 Consult with CKD when using a vacuum with the external pilot (K).
10 E2 and E2*J connectors and 12, 24 VDC only are supported. In addition, surgeless "S" and low exoergic/energy circuit "E" cannot be selected together.
*11 Surgeless specifications.
*12 A filter is built into port P as standard.
***13 Specify the spacer mounting position/ quantity in the manifold specifications sheet. Stacking of spacers is not possible. Combination with the masking plate is not supported. Only single solenoid can be selected together with radial push-in fitting (upward). Refer to pages 297 to 301 for details.**
*14 Not compatible with combination with external pilot (K).
*15 The grommet lead wire specifications are compatible with DC voltage only.
*16 AC voltages and 12/24 VDC are supported. In addition, a lamp comes with the terminal box.
*17 AC voltage is with a rectifier circuit.
*18 Combination with radial push-in fittings (upward) is not supported.
*19 The terminal box conforms to EN175301-803 Type C (former DIN 43650- C). Refer to pages 856 and 857 for details.
*20 Compatible only with MN4GB1 and MN4GB2 solenoid positions 3 and 4.
*21 3-position all ports closed, ABR connection, PAB connection and Push-in L-fitting(facing upward) Combination with is not supported.

Manifold components explanation and parts list

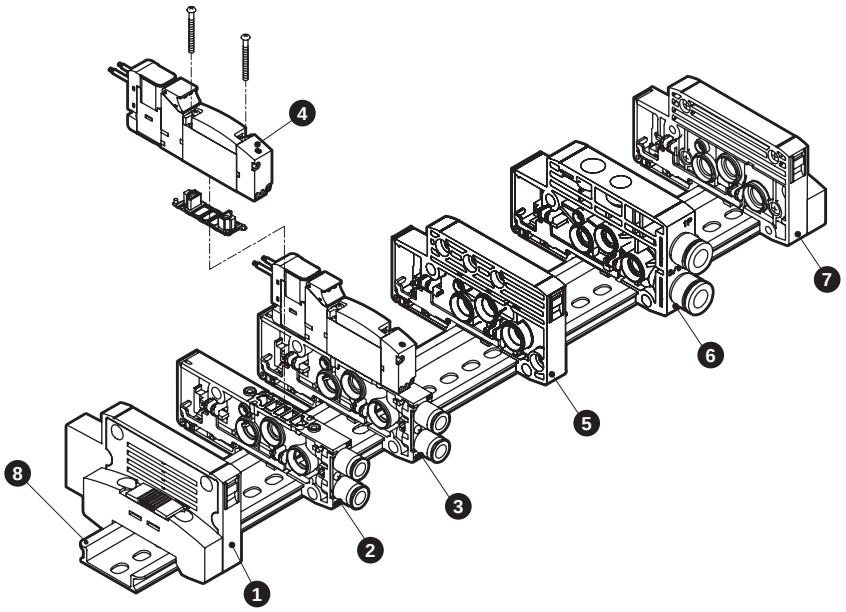

List of main components (refer to pages 286 to 305 for details)

No.	Component name	Model No. (example)	No.	Component name	Model No. (example)
1	End block L	N4G1R-EL	5	Partition block	N4G1R-S
2	Discrete valve block	N4GB1R-V1-C6	6	Supply and exhaust block	N4G1R-Q-8
3	Discrete valve block with solenoid valve	N4GB110R-C6-H-3	7	End block R	N4G1R-ER
4	Solenoid valve body	4GB119R-00-H-3	8	DIN rail	N4GR-BAA (Length)

B type individual wiring weight

4GB1

(g)

Part name	Model No.	Weight	Part name	Model No.	Weight
Valve block with solenoid valve	N4GB110R-C6	67	Supply and exhaust block	N4G1R-Q-8	58
	N4GB120R-C6	84		N4G1R-QK-8	60
	N4GB1$\frac{3}{5}$0R-C6	85	End block	N4G1R-E*	60
	N3GB1660R-C6-3	84		N4G1R-EX*	60
Valve block with masking plate	N4GB1R-MP-C6	37	Partition block	N4G1R-S	45
			Valve block	N4GB1R-V1-C*	33
			DIN rail	N4GR-BAA (Length)	0.19/mm

4GB2

(g)

Part name	Model No.	Weight	Part name	Model No.	Weight
Valve block with solenoid valve	N4GB210R-C8	128	Supply and exhaust block	N4G2R-Q-10	83
	N4GB220R-C8	145		N4G2R-QK-10	85
	N4GB2$\frac{3}{5}$0R-C8	156	End block	N4G2R-E*	84
	N3GB2660R-C8-3	145		N4G2R-EX*	85
Valve block with masking plate	N4GB2R-MP-C8	69	Partition block	N4G2R-S	60
			Valve block	N4GB2R-V1-C*	55
			DIN rail	N4GR-BAA (Length)	0.19/mm

Parts list

Applicable	Part name		Model No.
Valve 4G1	ø1.8 barbed		4G1R-JOINT-CF
	ø1.8 straight		4G1R-JOINT-C18
	ø4 straight		4G1R-JOINT-C4
	ø6 straight		4G1R-JOINT-C6
	ø1.8 elbow		4G1R-JOINT-CL18,CLL18
	ø4 elbow		4G1R-JOINT-CL4,CLL4
	ø6 elbow		4G1R-JOINT-CL6,CLL6
	ø1/8” straight		4G1R-JOINT-C3N
	ø5/32” straight		4G1R-JOINT-C4N
	ø1/8” elbow	*1	4G1R-JOINT-CL3N
	ø5/32” elbow	*1	4G1R-JOINT-CL4N
	Plug cartridge		4G1R-JOINT-CPG
Valve 4G2	ø4 straight		4G2R-JOINT-C4
	ø6 straight		4G2R-JOINT-C6
	ø8 straight		4G2R-JOINT-C8
	ø6 elbow		4G2R-JOINT-CL6,CLL6
	ø8 elbow		4G2R-JOINT-CL8,CLL8
	ø1/4” straight		4G2R-JOINT-C6N
	ø5/16” straight		4G2R-JOINT-C8N

Applicable	Part name		Model No.
Valve 4G2	ø1/4” elbow	*1	4G2R-JOINT-CL6N
	ø5/16” elbow	*1	4G2R-JOINT-CL8N
	Plug cartridge		4G2R-JOINT-CPG
Common	Coil assembly		4GR-[*1]-[*2]-COIL-[*3] *1: Electrical connections (blank, B, E0, ...), *2: Ozone/coolant proof (blank, A) Surgeless (S) Low exoergic/energy circuit (E) External pilot (K) *3: Voltage (1, 2, 3, 4)
	E-connector socket assembly		4GR-SOCKET-ASSY-[*1]-[*3] *1: Electrical connections (E0, E00, ...), *3: Voltage (1, 3, 4)
	EJ-connector socket assembly		4GR-SOCKET-ASSY-[*1] *1: Electrical connections (E01J, E02J, ...)
Valve 4G2	DIN terminal box assembly		4GR-TERMINAL-BOX-[*3] *3: Voltage (1, 2, 3, 4)

*1: Available as custom order.

Dimensions

MN4GB1

* For the 2-position single 3-port valve, either A port or B port is a plug. In addition, the two 3-port valve integrated have the same dimensions as the double model.

● Grommet lead wire (blank)

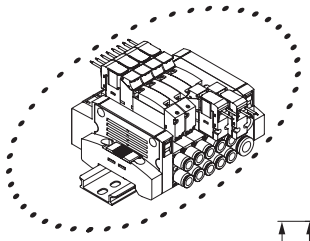

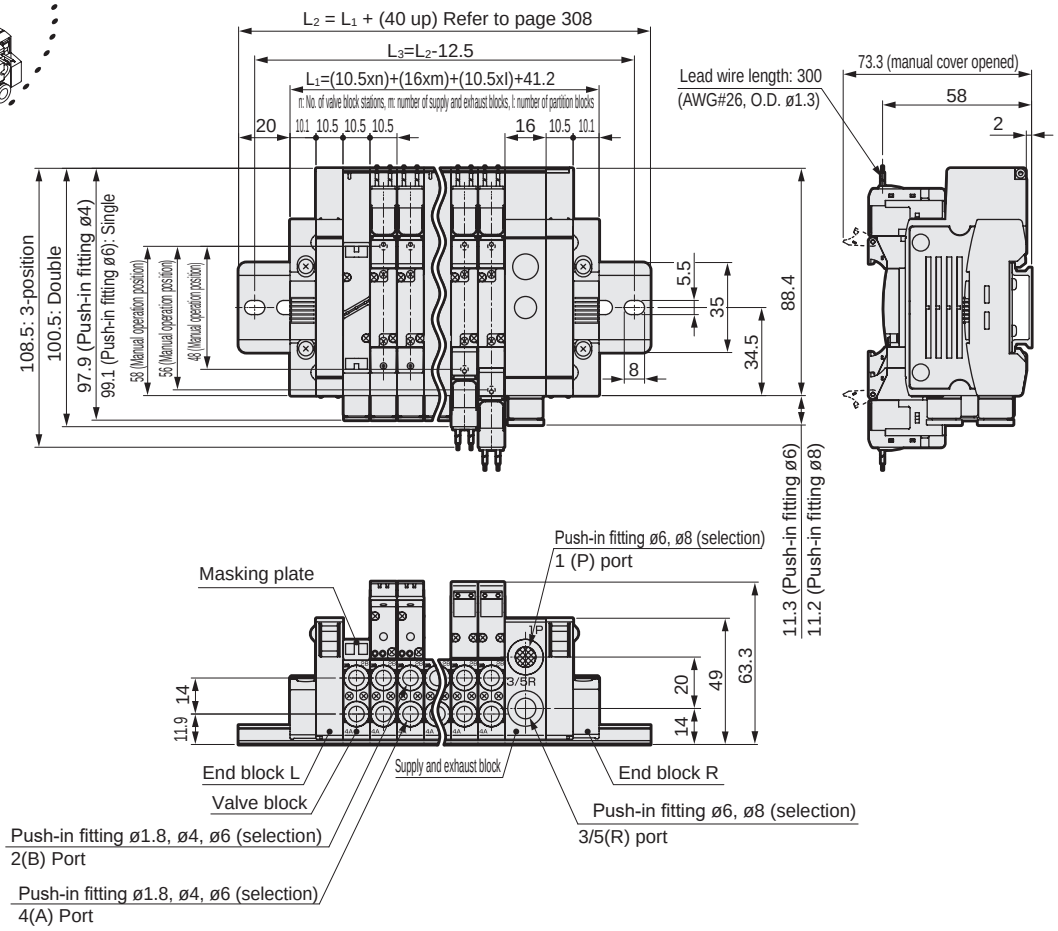

● E-connector (E)

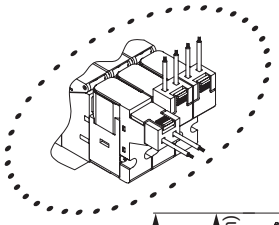

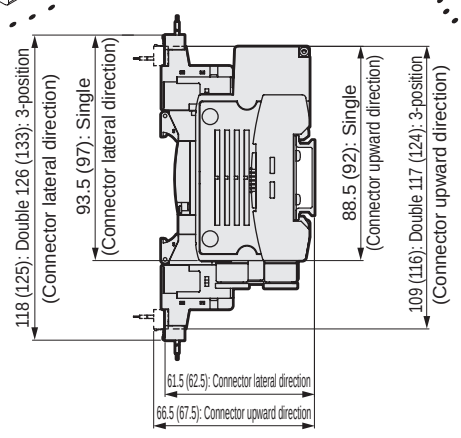

Note: Values in ( ) are for AC voltage.

● EJ-connector (E**J)

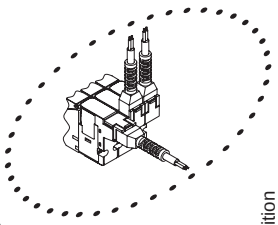

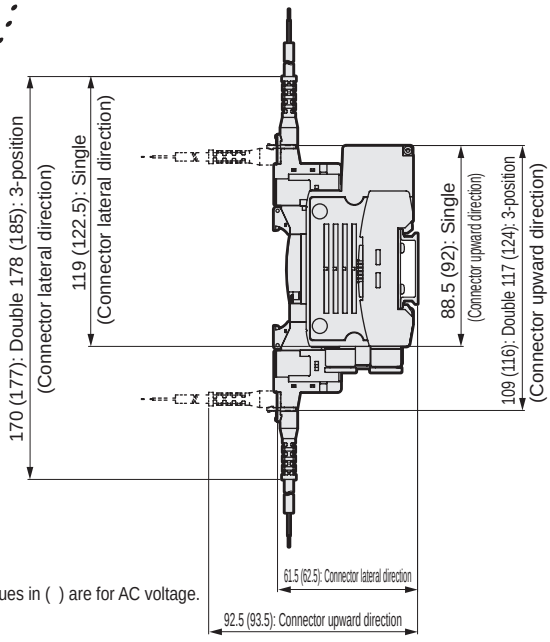

Note: Values in ( ) are for AC voltage.

* Refer to page 276 for dimensions of the valve block push-in fitting and supply and exhaust block push-in fitting.

Dimensions CAD

MN4GB2

● Grommet lead wire (blank)

* For the 2-position single 3-port valve, either A port or B port is a plug. In addition, the two 3-port valve integrated have the same dimensions as the double model.

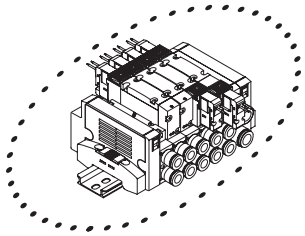

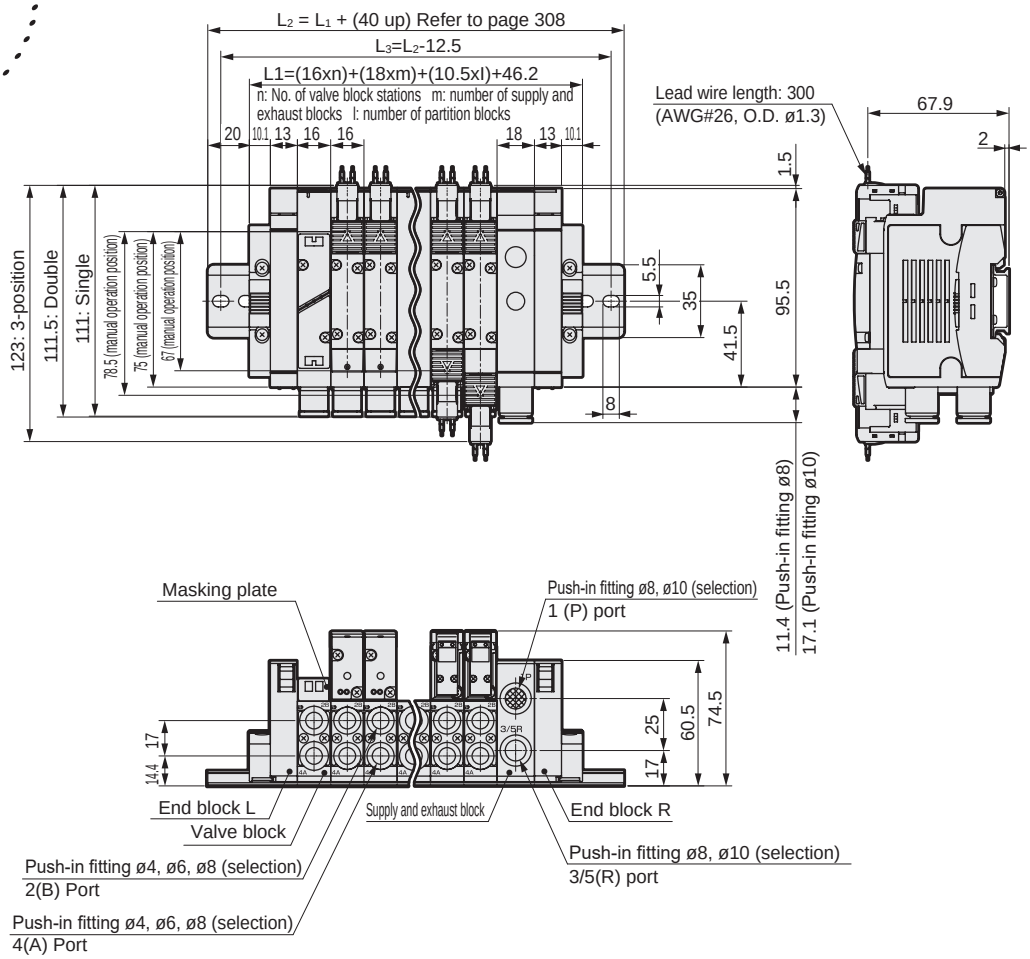

* Refer to page 278 for dimensions of the valve block push-in fitting and supply and exhaust block push-in fitting.

Dimensions

● E-connector (E)

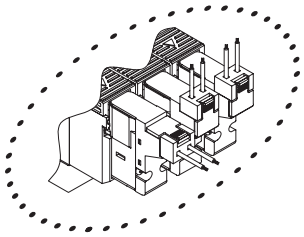

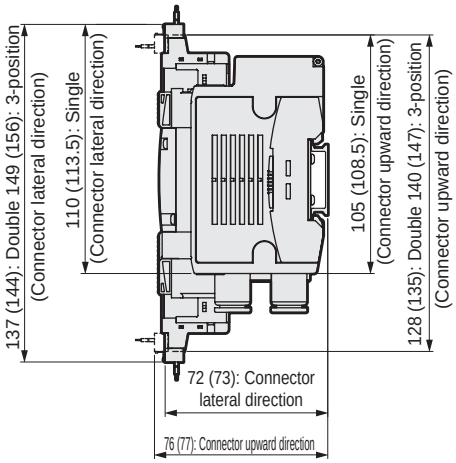

Note: Values in ( ) are for AC voltage.

● EJ-connector (E**J)

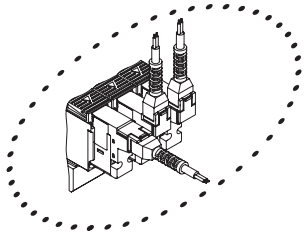

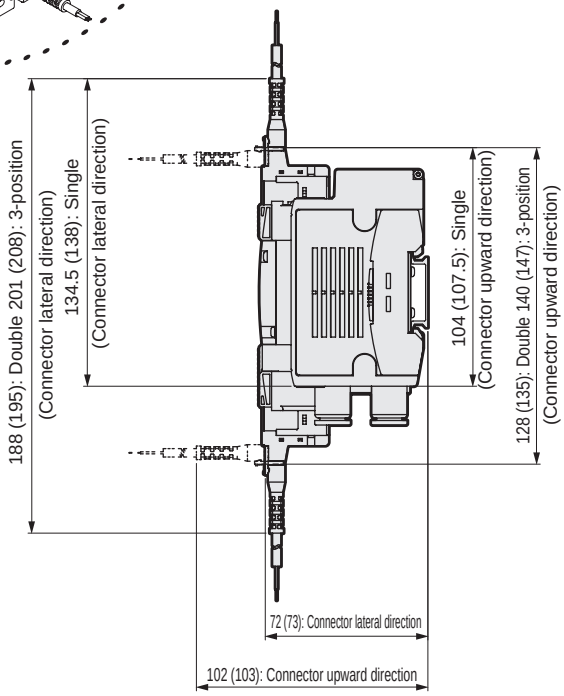

Note: Values in ( ) are for AC voltage.

● DIN terminal box (B)

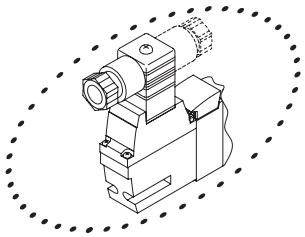

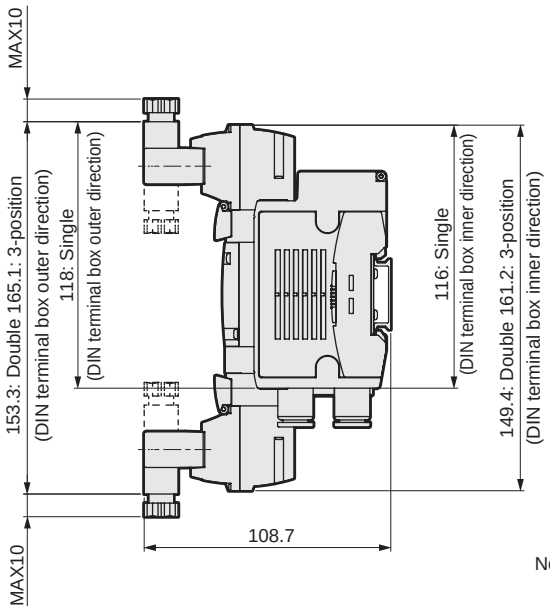

Note: DIN terminal box assembly is shipped facing inward.

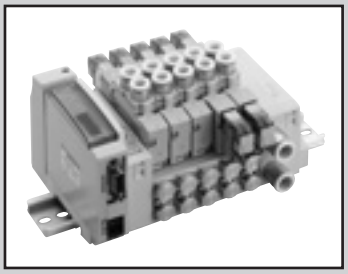

Reduced wiring block manifold
Body piping

MN4GA1/2-T* Series

● Cylinder bore size: ø20 to ø80

RoHS CAD

JIS symbol

● 3-port valve

2-position single NC

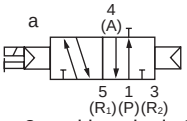

2-position single NO

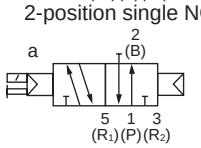

● Two 3-port valves integrated

(A side valve: NC, B side valve: NC)

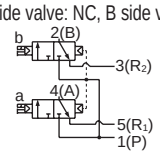

(A side valve: NC, B side valve: NO)

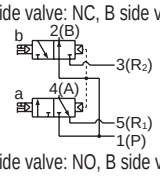

(A side valve: NO, B side valve: NC)

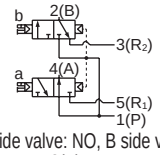

(A side valve: NO, B side valve: NO)

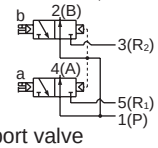

● 5-port valve

2-position single

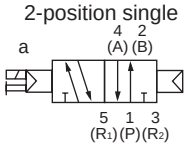

2-position double

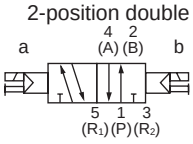

3-position all ports closed

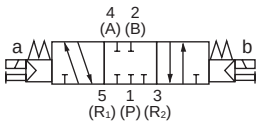

3-position A/B/R connection

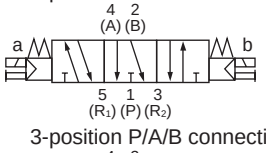

3-position P/A/B connection

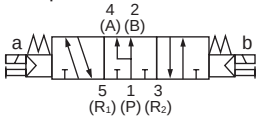

Manifold common specifications

Item	Description
Manifold	Block manifold
Mounting method	DIN rail mount
Supply and exhaust method	Common supply/common exhaust (With internal exhaust check valve)
Pilot exhaust method	Main valve/pilot valve common exhaust (Pilot exhaust check valve built-in)
Piping direction	Valve top direction
Valve and operation	Pilot operated soft spool valve
Working fluid	Compressed air
Max. working pressure MPa	0.7 (≈100 psi, 7 bar)
Min. working pressure MPa	0.2 (≈29 psi, 2 bar) (*3)
Proof pressure MPa	1.05 (≈150 psi, 10.5 bar)
Ambient temperature °C	-5 (23°F) to 55 (131°F) (no freezing)
Fluid temperature °C	5 (41°F) to 55 (131°F)
Manual override	Non-locking/locking common (standard)
Lubrication (*1)	Not required
Degree of protection (*2)	Dust-proof
Vibration resistance m/s²	50 or less
Shock resistance m/s²	300 or less
Atmosphere	Cannot be used in corrosive gas environments

Electrical specifications

Item		Description		
Rated voltage V		T1□, T30□, T5□		T6G1, T7□, T8□
		24 DC	12 DC	24 DC
Voltage fluctuation range (*4)		±10%		+10%, -5%
Holding current A	Standard	0.017	0.034	0.017
	With low exoergic/ energy saving circuit	0.005	0.010	0.005
Power consumption W	Standard	0.4		
	With low exoergic/ energy saving circuit	0.1		
Thermal class		B		
Surge suppressor (*5)		Zener diode		
Indicator		LED		

*4 T6G1, T7 □ and T8 □ (serial transmission) may experience voltage drops due to internal circuitry, so care should be taken when regulating voltages.

*5 If low exoergic/energy circuit or surgeless types are selected then there will be a diode.

*1 Use turbine oil Class 1 ISO VG32 for lubrication. Excessive or intermittent lubrication results in unstable operation.

*2 Dust-proof degree of protection. Not drip-proof. Avoid dripping water or oil, etc., during use.

*3 The working pressure range is 0 to 0.7 MPa when the external pilot (option code: K) is selected. Set the external pilot pressure between 0.2 and 0.7 MPa.

Individual specifications

Item			MN3GA1/MN4GA1									
			T10	T11	T30	T50	T51	T52	T53	T6G1	T7*1	T8*1/2
Max. station No.	Standard wiring		16 stations	24 stations	24 stations	16 stations	18 stations	8 stations	24 stations	16 stations	8/16 stations	16/24 stations
	Double wiring		8 stations	12 stations	12 stations	8 stations	9 stations	4 stations	12 stations	8 stations	4/8 stations	8/16 stations
Max. number of solenoids			16 points	24 points	24 points	16 points	18 points	8 points	24 points	16 points	8/16 points	16/32 points
Port size	Metric fitting/ M5, Rc thread	A/B port	Barbed fitting ø1.8 push-in fitting ø1.8, ø4, ø6, M5									
		P/R-port	Push-in fitting ø6, ø8									
	Inch fitting/M5, NPT thread	A/B port	Push-in fitting ø1/8", ø5/32", M5									
		P/R-port	Push-in fitting ø1/4", ø5/16"									
	Metric fitting, G thread	A/B port	-									
		P/R-port	-									

Item			MN3GA2/MN4GA2									
			T10	T11	T30	T50	T51	T52	T53	T6G1	T7*1	T8*1/2
Max. station No.	Standard wiring		16 stations	20 stations	20 stations	16 stations	18 stations	8 stations	20 stations	16 stations	8/16 stations	16/20 stations
	Double wiring		8 stations	12 stations	12 stations	8 stations	9 stations	4 stations	12 stations	8 stations	4/8 stations	8/16 stations
Max. number of solenoids			16 points	24 points	24 points	16 points	18 points	8 points	24 points	16 points	8/16 points	16/32 points
Port size	Metric fitting/ M5, Rc thread	A/B port	Push-in fitting ø4, ø6, ø8, Rc1/8									
		P/R-port	Push-in fitting ø8, ø10									
	Inch fitting/M5, NPT thread	A/B port	Push-in fitting ø1/4", ø5/16", NPT1/8									
		P/R-port	Push-in fitting ø5/16", ø3/8"									
	Metric fitting, G thread	A/B port	G1/8									
		P/R-port	Push-in fitting ø8, ø10									

· For weight, refer to page 250.

Flow characteristics

Model No.	Solenoid position		P→A/B		A/B→R1/R2	
			C[dm³/(s·bar)]	b	C[dm³/(s·bar)]	b
MN3GA1 MN4GA1	Two 3-port valves integrated		0.87	0.37	1.0 (0.68)	0.14 (0.22)
	2-position		0.98	0.33	1.2 (0.71)	0.11 (0.27)
	3-position	All ports closed	0.92	0.34	1.0 -	0.16 -
		ABR connection	0.92	0.29	1.1 (0.69)	0.13 (0.22)
		PAB connection	1.1	0.35	1.1 -	0.17 -
MN3GA2 MN4GA2	Two 3-port valves integrated		1.7	0.37	2.2 (1.6)	0.13 (0.21)
	2-position		2.2	0.21	2.5 (1.7)	0.19 (0.10)
	3-position	All ports closed	2.0	0.25	2.3 -	0.10 -
		ABR connection	2.0	0.27	2.5 (1.7)	0.18 (0.12)
		PAB connection	2.3	0.31	2.3 -	0.16 -

*1: Effective cross-sectional area S and sonic conductance C are converted as S ≈ 5.0 x C.

*2: Values in ( ) are with the exhaust check valve.

Reduced wiring specifications

Item	T10	T11	T30	T50	T51	T52	T53
Type	Common terminal block M3 thread	Common terminal block Clamping method	D-sub-connector	20P flat cable/p power supply terminal	20P flat cable connector, without power supply terminal	10P flat cable connector, without power supply terminal	26P flat cable connector, without power supply terminal
Connector	—	—	D-sub-connector 25-pin	MIL-C-83503 standard compliant pressure welding socket 20-pin	MIL-C-83503 standard compliant pressure welding socket 20-pin	MIL-C-83503 standard compliant pressure welding socket 10-pin	MIL-C-83503 standard compliant pressure welding socket 26-pin

Serial transmission device unit specifications

Download the communication setting file from the CKD website (https://www.ckd.co.jp/en/).

Item		T6G1
Network name		CC-Link ver. 1.10
Power supply voltage	Unit side	24 VDC ±10%
	Valve side	24 VDC 10%, −5%
Current consumption	Unit side	100 mA or less (when all output points are ON)
	Valve side	15 mA or less (when all output points are OFF)
No. of I/O points		16 points
Occupied number		1 station
Operation display		LED (power supply and communication status)
Output		NPN

Item		T7G1	T7L1*1	T7D1	T7S1	T7SP1
Network name		CC-Link ver. 1.10	SAVE NET	DeviceNet*2	CompoNet	
Power supply voltage	Unit side	24 VDC 10%, −5% Common power supply terminal				
	Valve side					
	Unit side	—	—	11 to 25 VDC *3	14.0 to 26.4 VDC	
Current consumption	Unit side	110 mA or less (when all output points are ON) Load current is not included			40 mA or less (when all output points are ON) Load current is not included	
	Valve side					
	Unit side	—	—	50 mA or less	65mA or less (all points ON: 24 VDC) 95 mA or less (all points ON: 14 VDC)	
No. of I/O points		16 points	16 points	16 points	16 points	
Occupied number		1 station	1 station	2 bytes	Word device 1 node (16 points)	
Operation display		LED (power supply and communication status)				
Output		NPN			NPN	PNP

Item		T8G1	T8GP1	T8P1	T8PP1	T8EC1	T8ECP1	T8EN1	T8ENP1	T8D1	T8DP1	T8EB1	T8EBP1	T8EP1	T8EPP1
		T8G2	T8GP2	T8P2	T8PP2	T8EC2	T8ECP2	T8EN2	T8ENP2	T8D2	T8DP2	T8EB2	T8EBP2	T8EP2	T8EPP2
Communication protocol		CC-Link ver. 1.10		PROFIBUS-DP (V0)		EtherCAT		EtherNet/IP		DeviceNet		CC-Link IEF Basic		PROFINET	
Power supply voltage	Unit side	24 VDC ±10%								11 to 25 VDC		24 VDC ±10%			
	Valve side	24 VDC+10%, -5%													
Current consumption	Unit side	60 mA or less (when all output points are ON)		60 mA or less (when all output points are ON)		110 mA or less (when all output points are ON)		120 mA or less (when all output points are ON)		70 mA or less (when all output points are ON)		130 mA or less (when all output points are ON)		130 mA or less (when all output points are ON)	
	Valve side	T8 □ 1: 15 mA or less T8 □ 2: 20 mA or less (When all output points are ON) Load current is not included								15 mA or less (When all output points are ON) Load current is not included					
No. of I/O points		T8 □ 1: 16 points T8 □ 2: 32 points													
Occupied number		1 station													
Operation display		LED (power supply and communication status)													
Output		NPN output	PNP output	NPN output	PNP output	NPN output	PNP output	NPN output	PNP output	NPN output	PNP output	NPN output	PNP output	NPN output	PNP output

*1 Transmission bit rate of 128 bits and half-duplex transmission method are supported. Contact CKD for other specifications.
*2 DeviceNet compliant networks (DLNK, etc.) are supported as well.
*3 Communication power supply (V+ and V- of DeviceNet cable) is isolated from power supply terminals (unit power supply/valve power supply).

How to order

Manifold model No.

MN4GA1 1 0 R - C6 - T30 W H - 10 - 3

3-port manifold model No.

MN3GA1 1 0 R - C6 - T30 W H - 10 - 3

Discrete valve block with solenoid valve

N4GA1 1 0 R - C6 - A2N *1 H — 3

Discrete 3-port valve block with solenoid valve

N3GA1 1 0 R - C6 - A2N *1 H — 3

* When a cable is required, refer to page 290 and specify the cable length for *1. When not required, leave the space blank.

Discrete solenoid valve

4GA1 1 9 R - C6 - A2N H — 3

Discrete 3-port solenoid valve

3GA1 1 9 R - C6 - A2N H — 3

Ⓐ Model No.

Ⓑ Solenoid position

Ⓒ Port size (*1)

Ⓓ Reduced wiring connection, serial transmission

Ⓔ Terminal/connector pin array

Ⓕ Option

Ⓖ Station No.

Ⓗ Voltage

Precautions for model selection

*1 : Specify the P/R port bore size with the supply and exhaust block model No. in the manifold specifications sheet.

*2 : Select MN4GA*80R when mixing with 4, 5-port valves. Further, select MN3GA*80R when mixing with masking plate.

*3 : Not compatible with combination with external pilot (K). Dimensions are the same as those of the respective 2-position double solenoid.

*4 : The push-in fitting cannot be mixed with the discrete valve's 4(A) or 2(B) port.

5 : Blank: The wiring will be based on the type of valve used. W: All wired for double solenoid valves regardless of the type of valve used.

*6 : Spare wiring (A type socket assembly) is included on the cap side for single types. A holder for retaining the socket assembly is included for single unit valves (A2N). Refer to page 304 for details.

*7 : 3-position all ports closed and PAB connection are not provided with the exhaust check valve (H). Refer to page 851 for details on the exhaust check valve.

*8 : Contact CKD when using a vacuum with the external pilot (K).

*9 : Surgeless "S" and low exoergic/energy circuit "E" cannot be selected together.

*10 : Surgeless specifications.

*11 : A filter is built into the P port as standard.

*12 : Specify the spacer mounting position and quantity in manifold specifications sheet. Stacking of spacers is not possible. Combination with the masking plate is not supported. Refer to pages 297 to 301 for details.

*13 : Not compatible with combination with external pilot (K).

Ⓐ Model No.								
Manifold				Discrete valve block with solenoid valve/ Discrete solenoid valve				
3-port valve		5-port valve						
MN3GA1	MN3GA2	MN4GA1	MN4GA2	(N)3GA1	(N)3GA2	(N)4GA1	(N)4GA2	

Code	Content									
Ⓑ Solenoid position										
1	2-position single				●	●			●	●
2	2-position double				●	●			●	●
3	3-position all ports closed				●	●			●	●
4	3-position ABR connection				●	●			●	●
5	3-position PAB connection				●	●			●	●
1	2-position single normally closed (*2)	●	●				●	●		
11	2-position single normally open (*2)	●	●				●	●		
66	Two 3-port valves integrated (*2) (*3)	A side valve: Normally closed B side valve: Normally closed	●	●				●	●		
67		A side valve: Normally closed B side valve: Normally open	●	●				●	●		
76		A side valve: Normally open B side valve: Normally closed	●	●				●	●		
77		A side valve: Normally open B side valve: Normally open	●	●				●	●		
8	Mix manifold (for multiple solenoid positions)		●	●	●	●	●	●	●	●
Ⓒ Port size (A/B-port)										
Code	Metric fitting/Rc thread									
CF	ø1.8 barbed fitting (compatible tube UP-9102-**)		●		●		●		●	
C18	ø1.8 push-in fitting (compatible tube UP-9402-**)		●		●		●		●	
C4	ø4 push-in fitting		●	●	●	●	●	●	●	●
C6	ø6 push-in fitting		●	●	●	●	●	●	●	●
C8	ø8 push-in fitting			●		●		●		●
CX	Push-in fitting mix (*4)		●	●	●	●				
M5	M5		●		●		●		●	
06	Rc1/8			●		●		●		●
Code	Inch fitting/inch thread									
C3N	ø1/8" push-in fitting		●		●		●		●	
C4N	ø5/32" push-in fitting		●		●		●		●	
C6N	ø1/4" push-in fitting			●		●		●		●
C8N	ø5/16" push-in fitting			●		●		●		●
CXN	Push-in fitting mix (*4)		●	●	●	●				
06N	NPT1/8			●		●		●		●
Code	G thread									
06G	G1/8			●		●		●		●
Ⓓ Reduced wiring connection, serial transmission										
Refer to the next page for reduced wiring and serial transmission.										
Ⓔ Terminal/connector pin array										
Blank	Standard wiring (*5)		●	●	●	●	●	●	●	●
W	Double wiring (*5)		●	●	●	●	●	●	●	●
W1	Double wiring (with single spare wiring) (*5) (*6)		●	●	●	●	●	●	●	●
Ⓕ Option										
Blank	Non-locking/locking common manual override		●	●	●	●	●	●	●	●
M	Non-locking manual override		●	●	●	●	●	●	●	●
H	With exhaust check valve (*7)		●	●	●	●	●	●	●	●
K	External pilot (*8)		●	●	●	●	●	●	●	●
A	Ozone/coolant proof		●	●	●	●	●	●	●	●
S	Surgeless (*9)		●	●	●	●	●	●	●	●
E	Low exoergic/energy circuit (*9) (*10)		●	●	●	●	●	●	●	●
Q	Reduced wiring duct		●	●	●	●	●	●	●	●
F	A/B port filter built in (*11)		●	●	●	●	●	●	●	●
Z1	Air supply spacer (*12)		●	●	●	●				
Z2	In-stop valve spacer (*12) (*13)		●	●	●	●				
Z3	Exhaust spacer (*12)		●	●	●	●				
Ⓖ Station No.										
1	1 station		●	●	●	●				
to	to									
24	24 stations (Refer to page 246 for the max. station number per model)									
Ⓗ Voltage										
3	24 VDC		●	●	●	●	●	●	●	●
4	12 VDC		●	●	●	●	●	●	●	●

is not available.

			Ⓐ Model No.							
			Manifold				Discrete valve block with solenoid valve/ Discrete solenoid valve			
			3-port valve		5-port valve					
			MN3GA1	MN3GA2	MN4GA1	MN4GA2	(N)3GA1	(N)3GA2	(N)4GA1	(N)4GA2
Ⓓ Reduced wiring (lamp and surge suppressor provided as standard) 12/24 VDC										
T10	Common terminal block (M3 thread)	Left-sided specifications	●	●	●	●				
T10R		Right-sided specifications	●	●	●	●				
T11	Common terminal block (clamping)	Left-sided specifications	●	●	●	●				
T11R		Right-sided specifications	●	●	●	●				
T30	D-sub-connector	Left-sided specifications	●	●	●	●				
T30R		Right-sided specifications	●	●	●	●				
T50	20-pin flat cable connector (with power supply terminal)	Left-sided specifications	●	●	●	●				
T50R		Right-sided specifications	●	●	●	●				
T51	20-pin flat cable connector (without power supply terminal)	Left-sided specifications	●	●	●	●				
T51R		Right-sided specifications	●	●	●	●				
T52	10-pin flat cable connector (without power supply terminal)	Left-sided specifications	●	●	●	●				
T52R		Right-sided specifications	●	●	●	●				
T53	26-pin flat cable connector (without power supply terminal)	Left-sided specifications	●	●	●	●				
T53R		Right-sided specifications	●	●	●	●				
Ⓓ Serial transmission (lamp/surge suppressor provided as standard) 24 VDC										
T6G1	CC-Link	NPN 16 points	●	●	●	●				
T7D1	DeviceNet	NPN 16 points	●	●	●	●				
T7G1	CC-Link	NPN 16 points	●	●	●	●				
T7L1	SAVE NET	NPN 16 points	●	●	●	●				
T7S1	CompoNet	NPN 16 points	●	●	●	●				
T7SP1		PNP 16 points	●	●	●	●				
T8G1	CC-Link	NPN 16 points	●	●	●	●				
T8G2		NPN 32 points	●	●	●	●				
T8GP1		PNP 16 points	●	●	●	●				
T8GP2		PNP 32 points	●	●	●	●				
T8P1	PROFIBUS-DP	NPN 16 points	●	●	●	●				
T8P2		NPN 32 points	●	●	●	●				
T8PP1		PNP 16 points	●	●	●	●				
T8PP2		PNP 32 points	●	●	●	●				
T8EC1	EtherCAT	NPN 16 points	●	●	●	●				
T8EC2		NPN 32 points	●	●	●	●				
T8ECP1		PNP 16 points	●	●	●	●				
T8ECP2		PNP 32 points	●	●	●	●				
T8EN1	EtherNet/IP	NPN 16 points	●	●	●	●				
T8EN2		NPN 32 points	●	●	●	●				
T8ENP1		PNP 16 points	●	●	●	●				
T8ENP2		PNP 32 points	●	●	●	●				
T8D1	DeviceNet	NPN 16 points	●	●	●	●				
T8D2		NPN 32 points	●	●	●	●				
T8DP1		PNP 16 points	●	●	●	●				
T8DP2		PNP 32 points	●	●	●	●				
T8EB1	CC-Link IEF Basic	NPN 16 points	●	●	●	●				
T8EB2		NPN 32 points	●	●	●	●				
T8EBP1		PNP 16 points	●	●	●	●				
T8EBP2		PNP 32 points	●	●	●	●				
T8EP1	PROFINET	NPN 16 points	●	●	●	●				
T8EP2		NPN 32 points	●	●	●	●				
T8EPP1		PNP 16 points	●	●	●	●				
T8EPP2		PNP 32 points	●	●	●	●				
A2N	Without lead wire (without socket) with surge suppressor and indicator lamp						●	●	●	●

Ozone-proof specifications • Coolant proof specifications

Can be selected with "How to order" Item Ⓕ option "A" on page 248.

Clean-room specifications

● Clean room compatible specifications

** - Voltage - **P7***

Specifications for rechargeable battery

(Catalog No. CC-1226A)

● For use in the rechargeable battery manufacturing process, materials used for air path and sliding section are limited

** - Voltage - **P4**

CE marking specifications

** - Voltage - **ST**

• Standard voltage of 24 VDC or less is CE marking-compatible even if the model No. is not indicated with "ST".

Manifold components explanation and parts list

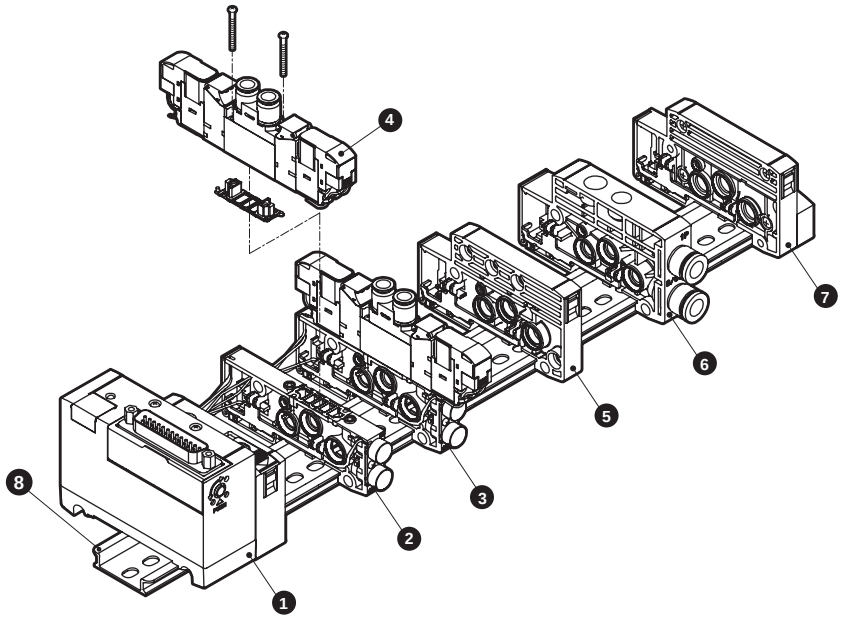

List of main components (refer to pages 286 to 305 for details)

No.	Component name	Model No. (example)	No.	Component name	Model No. (example)
1	Wiring block (*)	N4G1R-T30	5	Partition block	N4G1R-S
2	Discrete valve block	N4GA1R-V2	6	Supply and exhaust block	N4G1R-Q-8
3	Discrete valve block with solenoid valve	N4GA120R-C6-A2NH-3	7	End block R	N4G1R-ER
4	Solenoid valve body	4GA129R-C6-A2NH-3	8	DIN rail	N4GR-BAA (Length)

Note: Wiring block cannot be ordered as a single item.

A type reduced wiring weight

4GA1

(g)

Part name	Model No.	Weight	Part name	Model No.	Weight	Part name	Model No.	Weight
Valve block with solenoid valve	N3GA110R-C6-A2N-3	72	Supply and exhaust block	N4G1R-Q-8	58	Wiring block (*)	N4G1R-T10(R)	207
	N3GA1110R-C6-A2N-3	72		N4G1R-QK-8	60		N4G1R-T30(R)	165
	N4GA110R-C6-A2N-3	72	End block	N4G1R-E*	60		N4G1R-T50(R)	167
	N4GA120R-C6-A2N-3	91		N4G1R-EX*	60		N4G1R-T6G1	295
	N4GA1$\frac{3}{5}$0R-C6-A2N-3	95	Partition block	N4G1R-S	45		N4G1R-T7*	203
	N3GA1660R-C6-A2N-3	91	Valve block	N4GA1R-V1	28		N4G1R-T8*	229
Valve block with masking plate	N4GA1R-MP*-C6	34		N4GA1R-V2	30	DIN rail	N4GR-BAA (Length)	0.19/mm

Note: Wiring block cannot be ordered as a single item.

4GA2

(g)

Part name	Model No.	Weight	Part name	Model No.	Weight	Part name	Model No.	Weight
Valve block with solenoid valve	N3GA210R-C8-A2N-3	131	Supply and exhaust block	N4G2R-Q-10	83	Wiring block (*)	N4G2R-T10(R)	223
	N3GA2110R-C8-A2N-3	131		N4G2R-QK-10	85		N4G2R-T30(R)	182
	N4GA210R-C8-A2N-3	131	End block	N4G2R-E*	84		N4G2R-T50(R)	184
	N4GA220R-C8-A2N-3	151		N4G2R-EX*	85		N4G2R-T6G1	312
	N4GA2$\frac{3}{5}$0R-C8-A2N-3	163	Partition block	N4G2R-S	60		N4G2R-T7*	204
	N3GA2660R-C8-A2N-3	151	Valve block	N4GA2R-V1	53		N4G2R-T8*	242
Valve block with masking plate	N4GA2R-MP*-C8	66		N4GA2R-V2	55	DIN rail	N4GR-BAA (Length)	0.19/mm

Note: Wiring block cannot be ordered as a single item.

Parts list

Applicable	Part name	Model No.	Applicable	Part name	Model No.
Valve 4G1	Cartridge fitting ø1.8 barbed	4G1R-JOINT-CF	Common	Coil assembly	4GR-A2N-[*2]-COIL-[*3] *2: Ozone/coolant proof (blank, A) Surgeless (S) Low exoergic/energy circuit (E) *3: Voltage (3, 4)
	Cartridge fitting ø1.8 straight	4G1R-JOINT-C18			
	Cartridge fitting ø4 straight	4G1R-JOINT-C4			
	Cartridge fitting ø6 straight	4G1R-JOINT-C6			
	Cartridge fitting ø1/8" straight	4G1R-JOINT-C3N	Manifold	Expansion socket assembly (Details on page 837)	For a side solenoid N4GR-SOCKET-ASSY-[selection No.]
	Cartridge fitting ø5/32" straight	4G1R-JOINT-C4N			
	Plug cartridge	4G1R-JOINT-CPG			
Valve 4G2	Cartridge fitting ø4 straight	4G2R-JOINT-C4			For b side solenoid N4GR-RELAY-SOCKET-[selection No.]
	Cartridge fitting ø6 straight	4G2R-JOINT-C6			
	Cartridge fitting ø8 straight	4G2R-JOINT-C8			
	Cartridge fitting ø1/4" straight	4G2R-JOINT-C6N			
	Cartridge fitting ø5/16" straight	4G2R-JOINT-C8N			
	Plug cartridge	4G2R-JOINT-CPG			

MEMO

Dimensions CAD

MN4GA1

● Common terminal block (M3 thread) left side (T10)

*1: Clamping specification (T11) is also available. Dimensions are the same as T10.

*2: For the 2-position single 3-port valve, either A port or B port is a plug. In addition, the two 3-port valve integrated have the same dimensions as the double model.

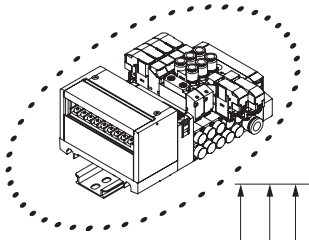

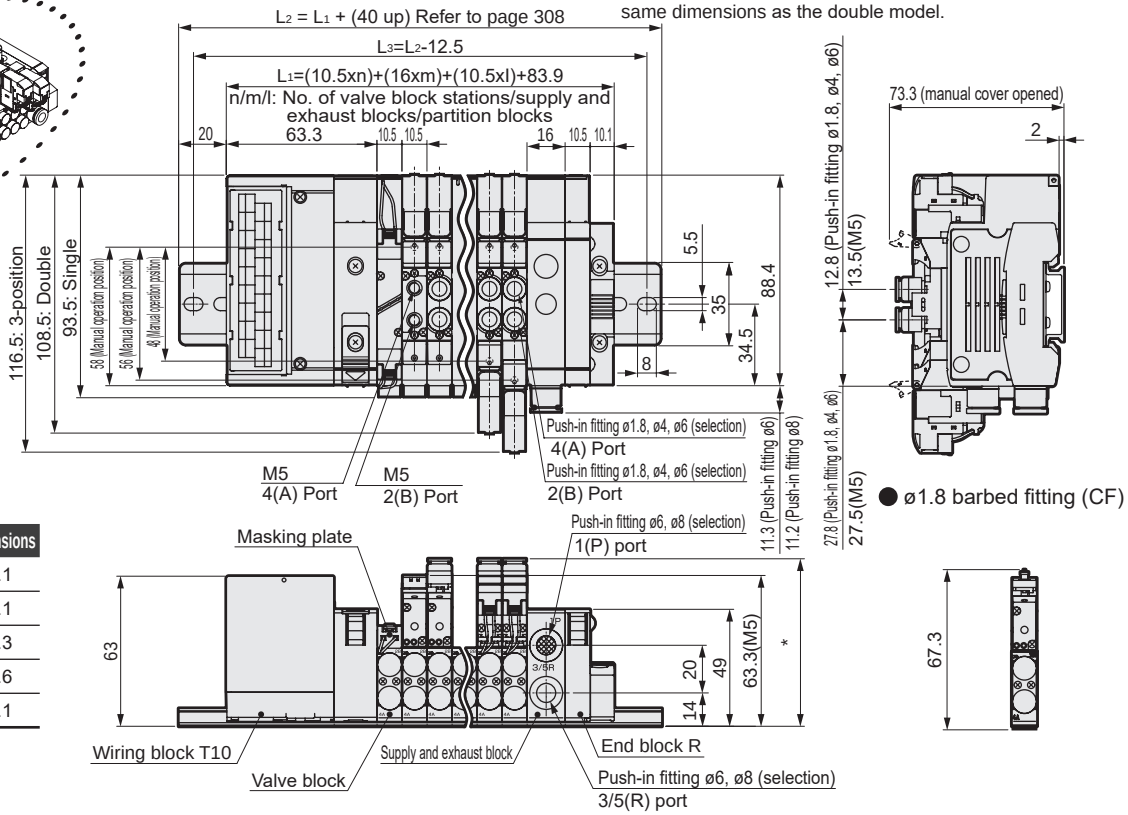

● ø1.8 barbed fitting (CF)

Push-in fitting bore size	* Dimensions
ø1.8	65.1
ø4	69.1
ø6	70.3
ø1/8"	69.6
ø5/32"	69.1

● Common terminal block (M3 thread) right side (T10R)

*1: Clamping specification (T11R) is also available. Dimensions are the same as T10R.

*2: For the 2-position single 3-port valve, either A port or B port is a plug. In addition, the two 3-port valve integrated have the same dimensions as the double model.

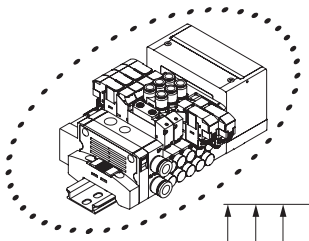

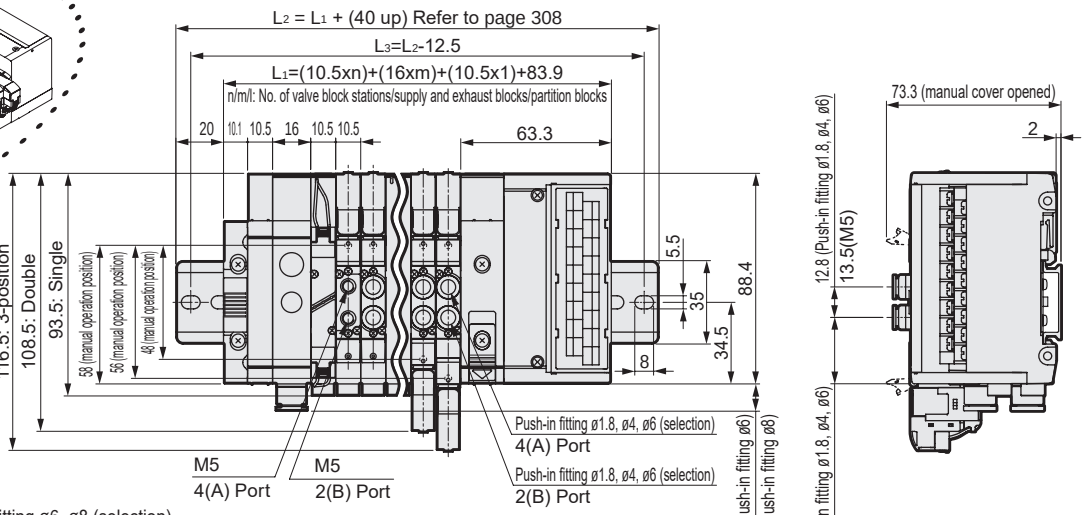

Push-in fitting bore size	* Dimensions
ø1.8	65.1
ø4	69.1
ø6	70.3
ø1/8"	69.6
ø5/32"	69.1

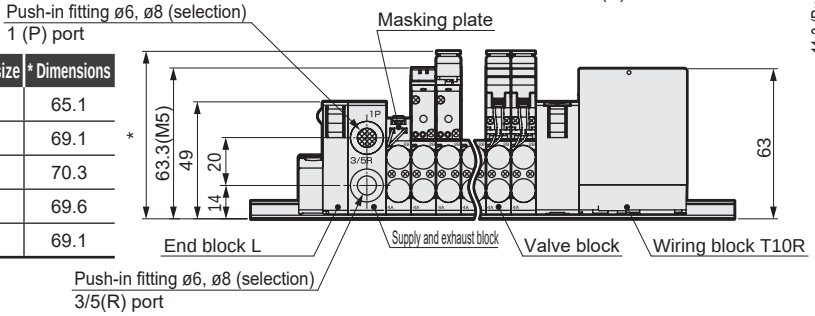

Dimensions CAD

MN4GA2

● Common terminal block (M3 thread) left side (T10)

*1: Clamping specification (T11) is also available. Dimensions are the same as T10.
*2: For the 2-position single 3-port valve, either A port or B port is a plug. In addition, the two 3-port valve integrated have the same dimensions as the double model.

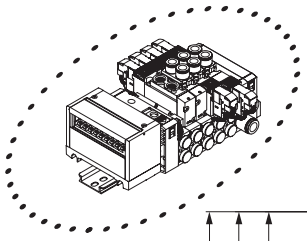

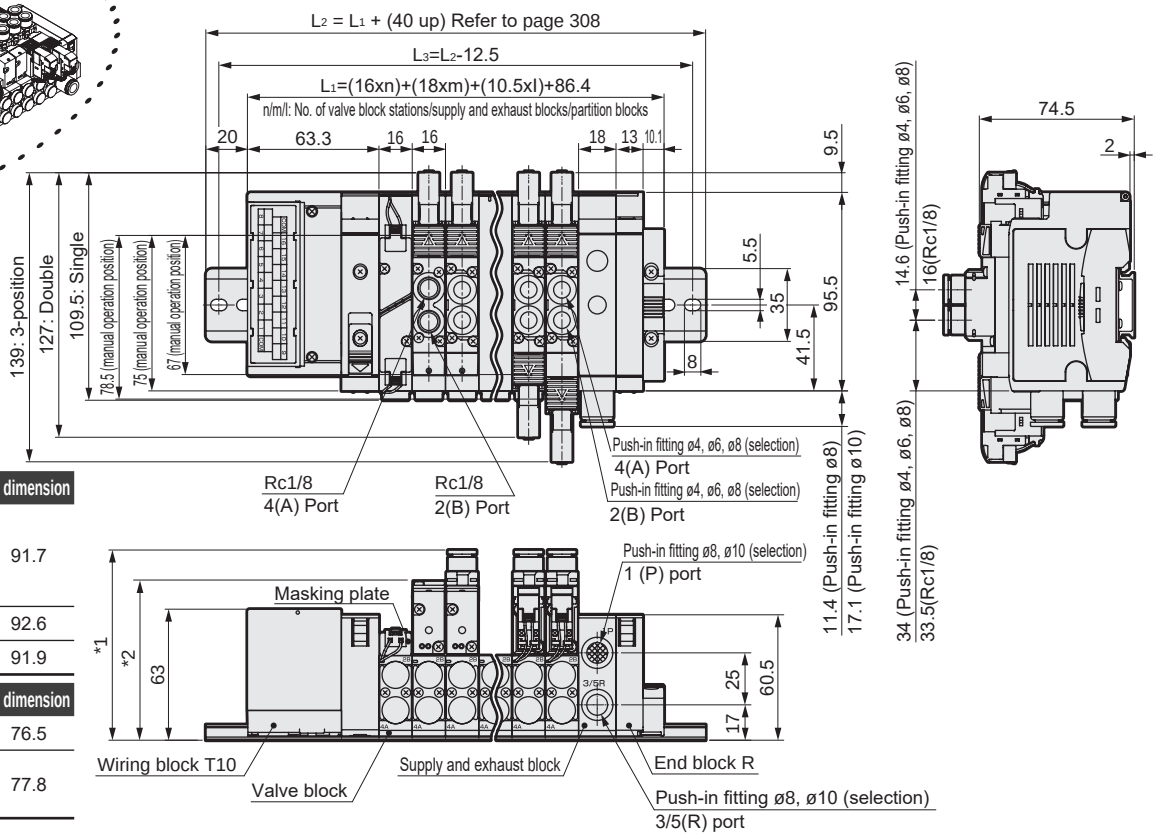

Push-in fitting bore size	*1 dimension
ø4	91.7
ø6	
ø8	
ø1/4"	92.6
ø5/16"	91.9

Female thread bore size	*2 dimension
Rc1/8	76.5
NPT1/8	77.8
G1/8	

● Common terminal block (M3 thread) right side (T10R)

*1: Clamping specification (T11R) is also available. Dimensions are the same as T10R.
*2: For the 2-position single 3-port valve, either A port or B port is a plug. In addition, the two 3-port valve integrated have the same dimensions as the double model.

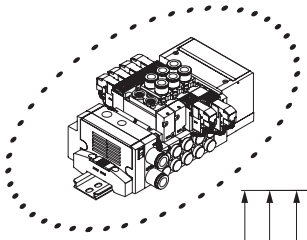

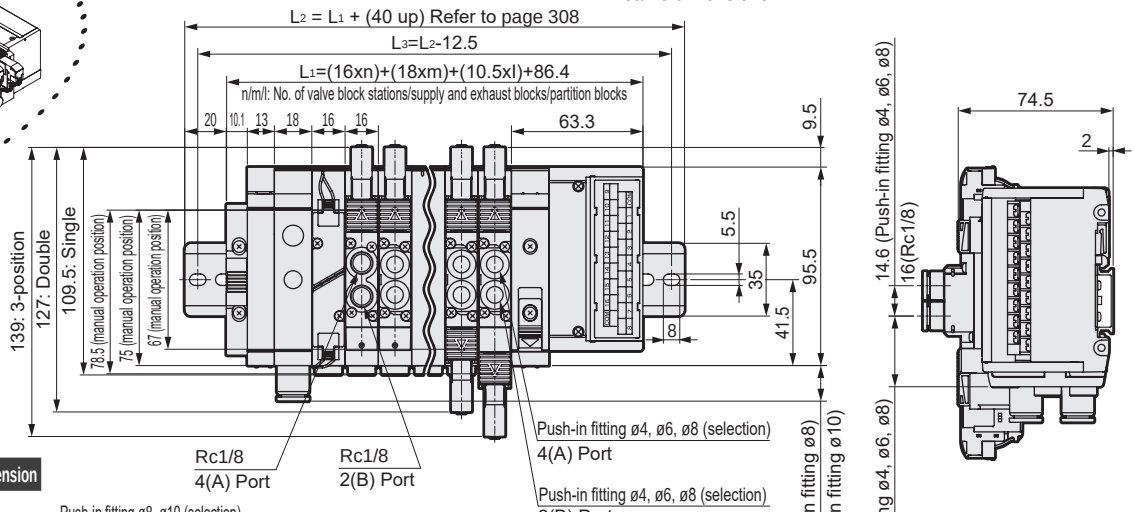

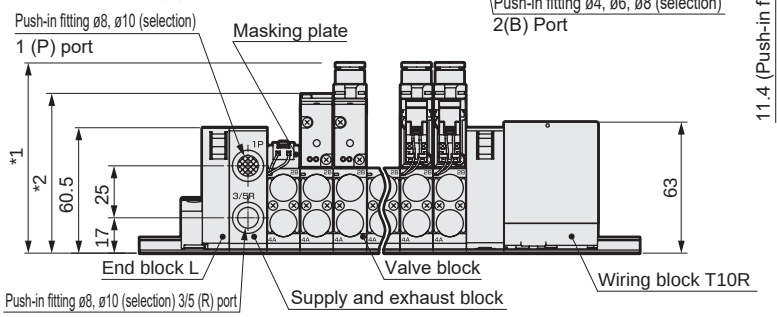

Push-in fitting bore size	*1 dimension
ø4	91.7
ø6	
ø8	
ø1/4"	92.6
ø5/16"	91.9

Female thread bore size	*2 dimension
Rc1/8	76.5
NPT1/8	77.8
G1/8	

Dimensions CAD

MN4GA1

● D sub-connector left side (T30)

Note: For the 2-position single 3-port valve, either A port or B port is a plug. In addition, the two 3-port valve integrated have the same dimensions as the double model.

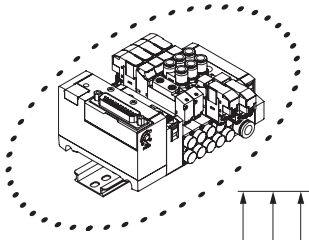

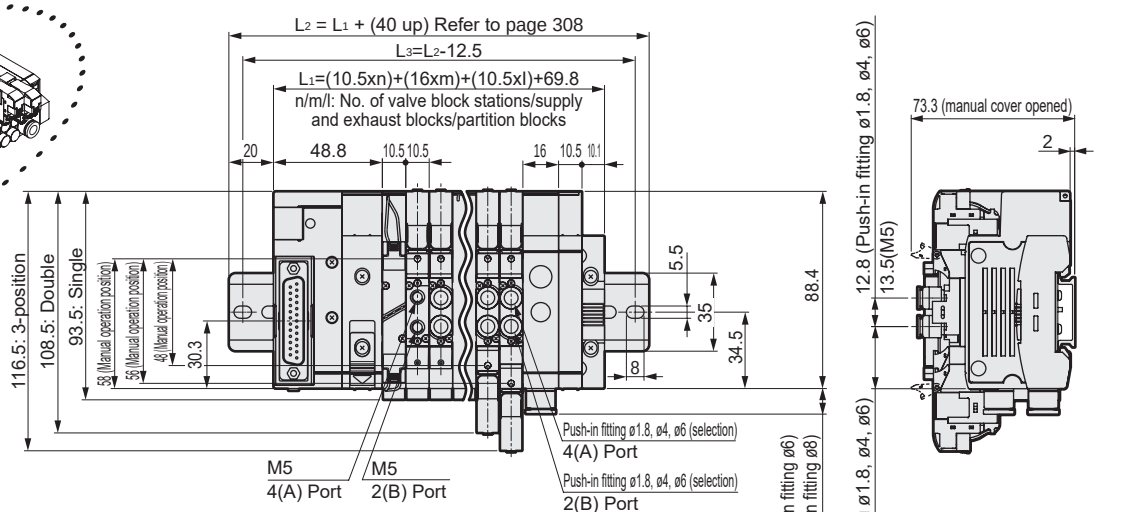

Push-in fitting bore size	* Dimensions
ø1.8	65.1
ø4	69.1
ø6	70.3
ø1/8"	69.6
ø5/32"	69.1

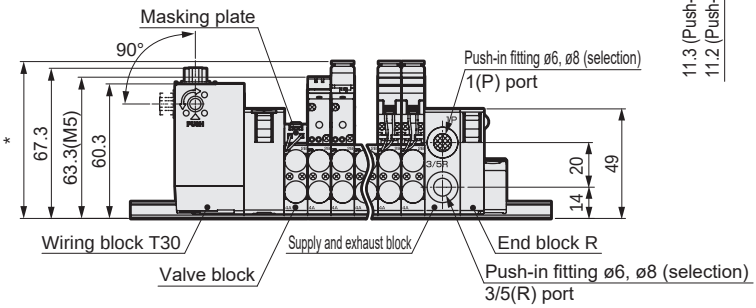

● ø1.8 barbed fitting (CF)

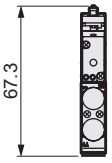

● D sub-connector right side (T30R)

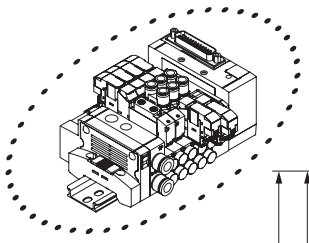

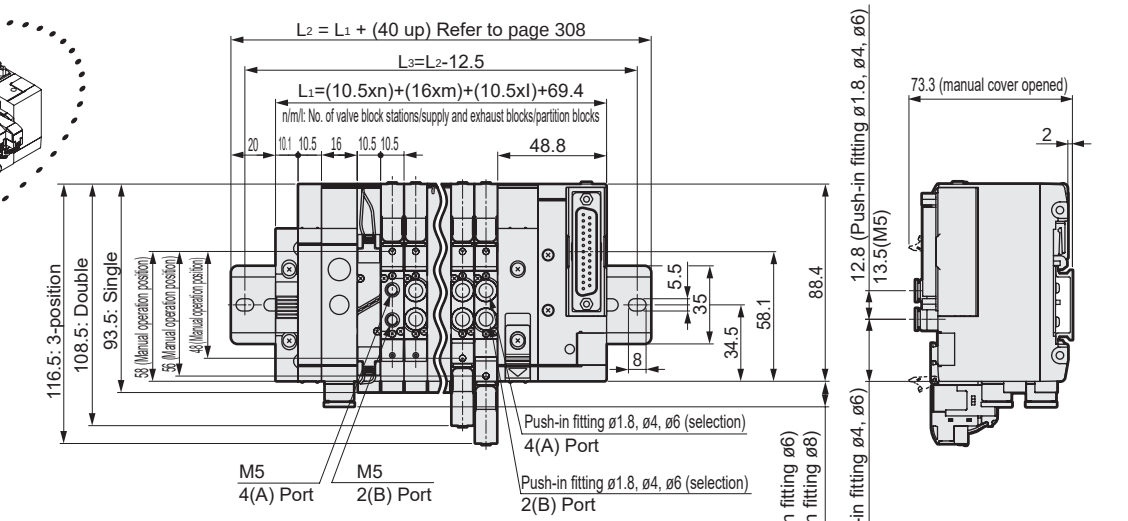

Push-in fitting bore size	* Dimensions
ø1.8	65.1
ø4	69.1
ø6	70.3
ø1/8"	69.6
ø5/32"	69.1

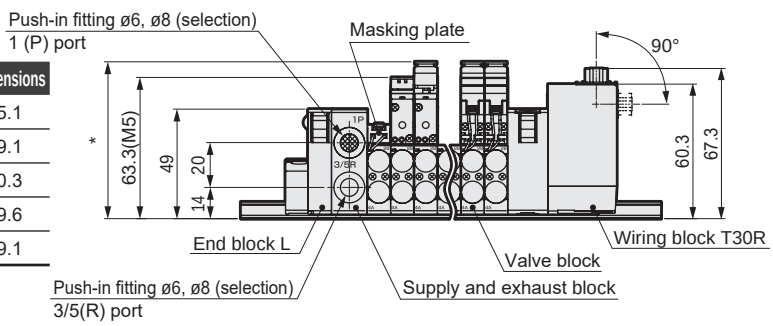

Dimensions CAD

MN4GA2

● D sub-connector left side (T30)

Note: For the 2-position single 3-port valve, either A port or B port is a plug. In addition, the two 3-port valve integrated have the same dimensions as the double model.

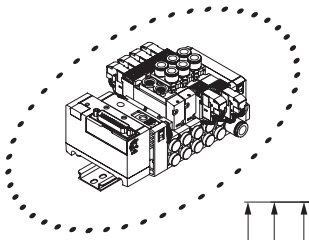

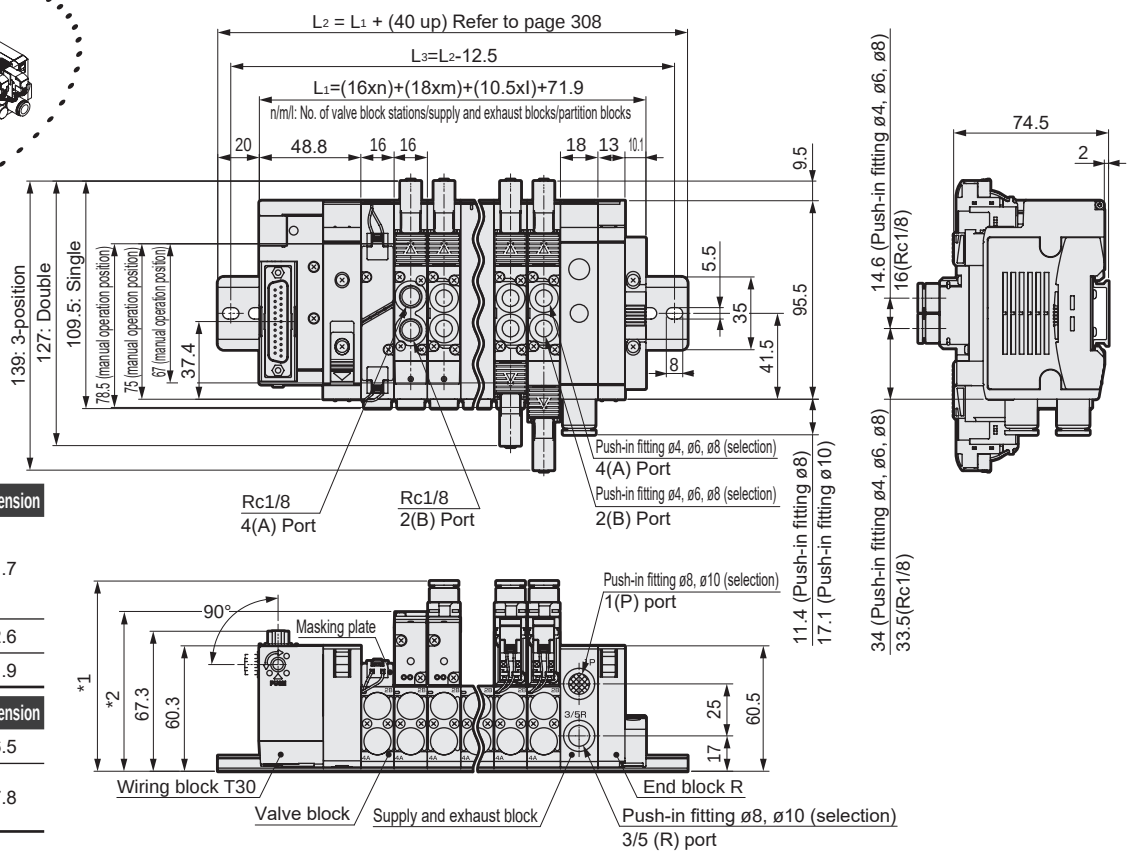

Push-in fitting bore size	*1 dimension
ø4	91.7
ø6	
ø8	
ø1/4"	92.6
ø5/16"	91.9

Female thread bore size	*2 dimension
Rc1/8	76.5
NPT1/8	77.8
G1/8	

● D sub-connector right side (T30R)

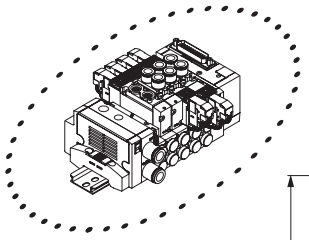

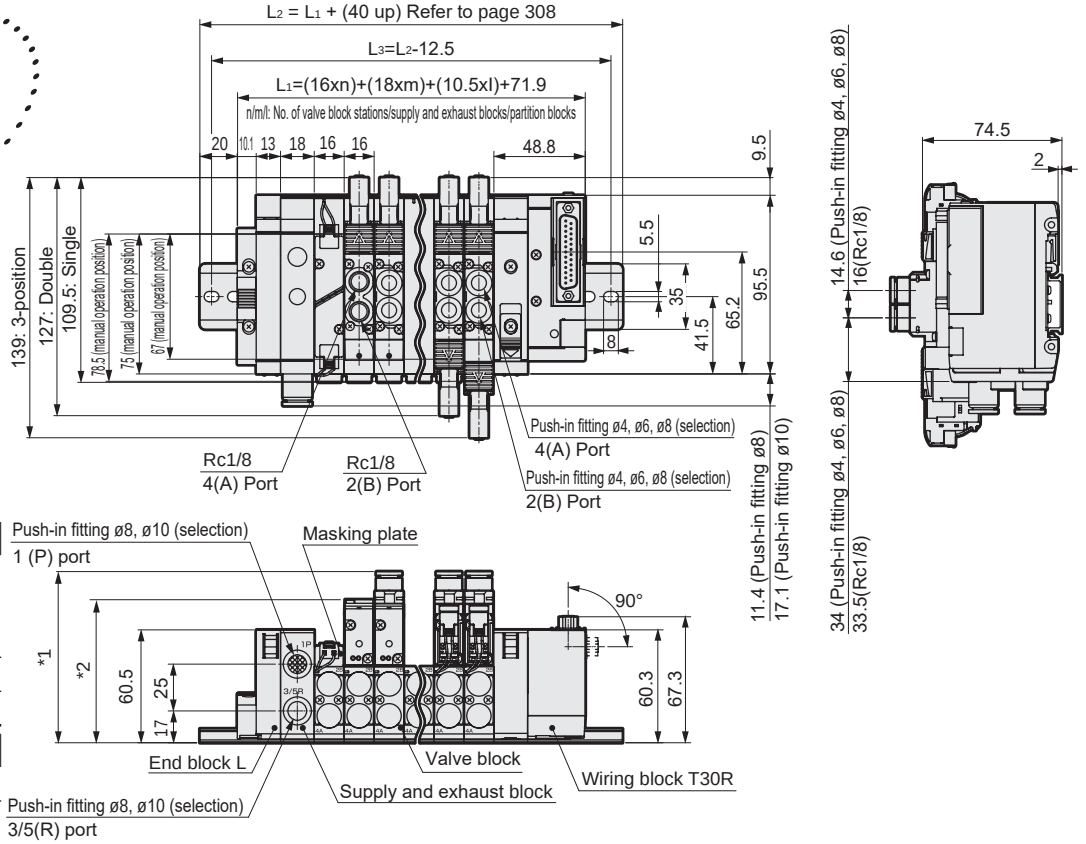

Push-in fitting bore size	*1 dimension
ø4	91.7
ø6	
ø8	
ø1/4"	92.6
ø5/16"	91.9

Female thread bore size	*2 dimension
Rc1/8	76.5
NPT1/8	77.8
G1/8	

Dimensions CAD

MN4GA1

*1: T51, T52, and T53 are also available as flat cable connector. Dimensions are the same as T50.

*2: For the 2-position single 3-port valve, either A port or B port is a plug. In addition, the two 3-port valve integrated have the same dimensions as the double model.

● Flat cable connector left side (T50) with power supply terminal

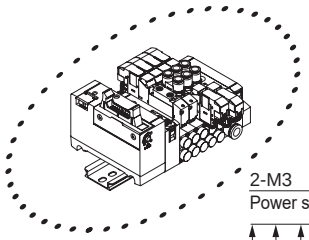

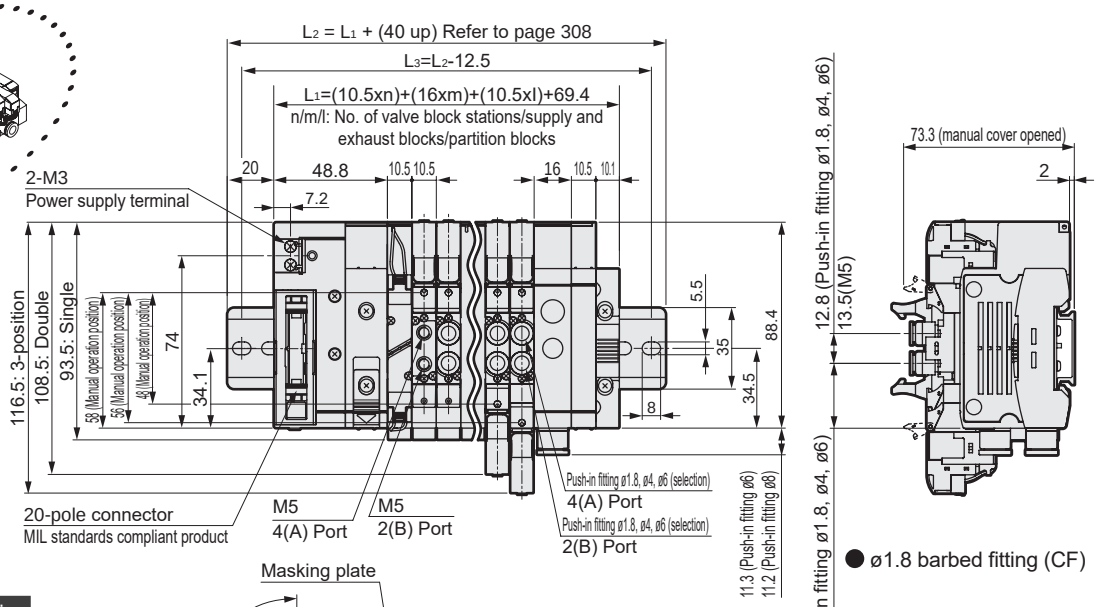

● ø1.8 barbed fitting (CF)

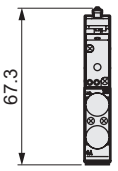

Push-in fitting bore size	* Dimensions
ø1.8	65.1
ø4	69.1
ø6	70.3
ø1/8"	69.6
ø5/32"	69.1

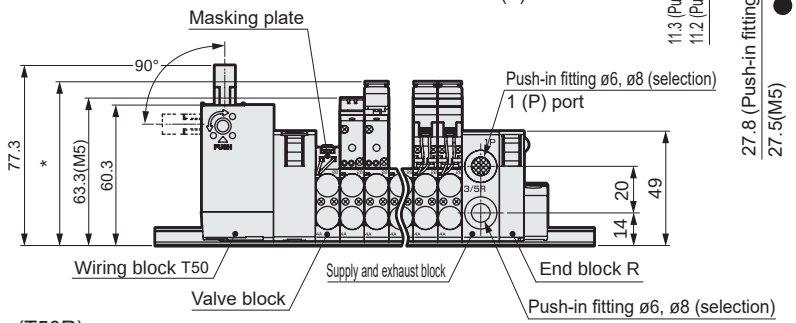

● Flat cable connector right side (T50R) with power supply terminal

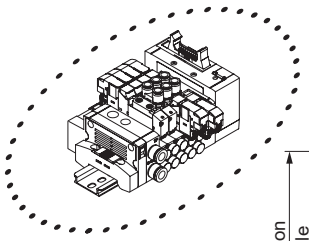

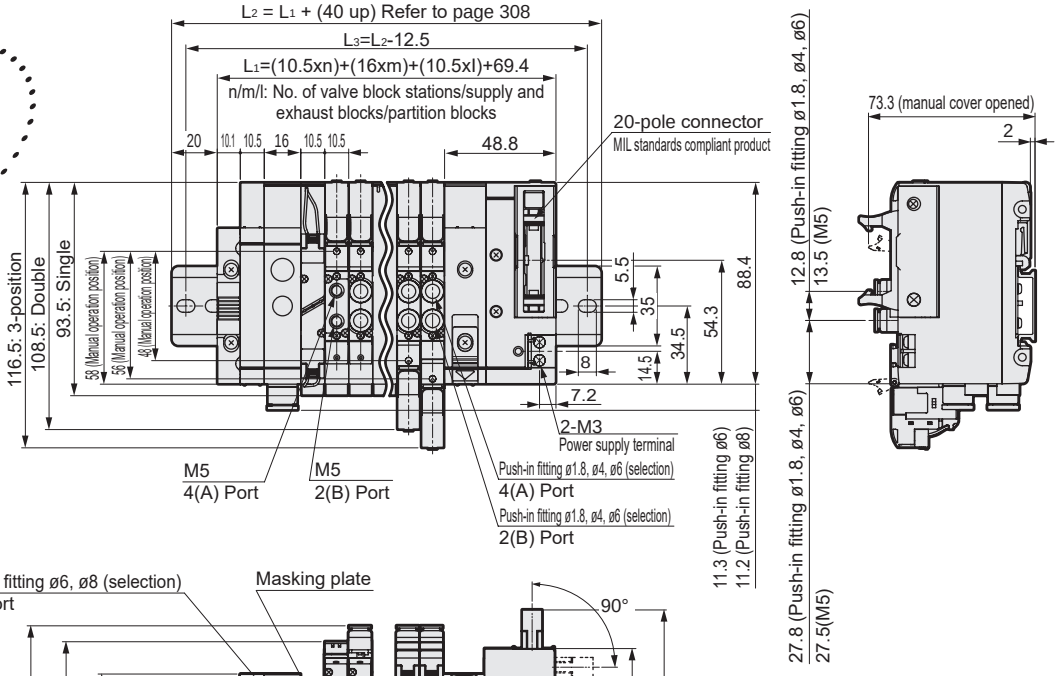

Push-in fitting bore size	* Dimensions
ø1.8	65.1
ø4	69.1
ø6	70.3
ø1/8"	69.6
ø5/32"	69.1

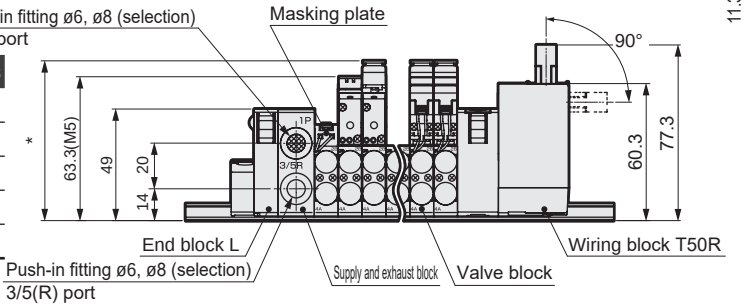

Dimensions CAD

MN4GA2

*1: T51, T52, and T53 are also available as flat cable connector. Dimensions are the same as T50.
*2: For the 2-position single 3-port valve, either A port or B port is a plug. In addition, the two 3-port valve integrated have the same dimensions as the double model.

● Flat cable connector left side (T50) with power supply terminal

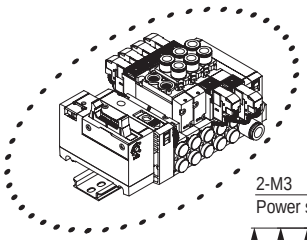

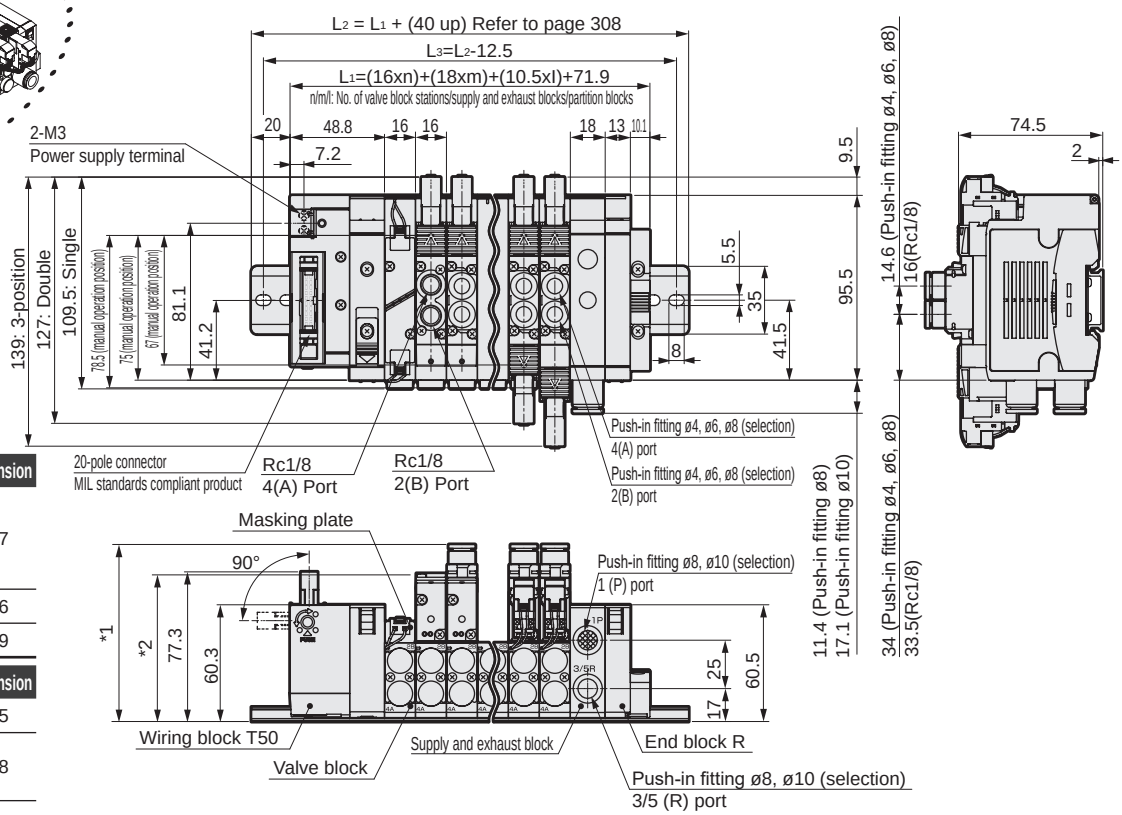

Push-in fitting bore size	*1 dimension
ø4	91.7
ø6	
ø8	
ø1/4”	92.6
ø5/16”	91.9

Female thread bore size	*2 dimension
Rc1/8	76.5
NPT1/8	77.8
G1/8	

● Flat cable connector right side (T50R) with power supply terminal

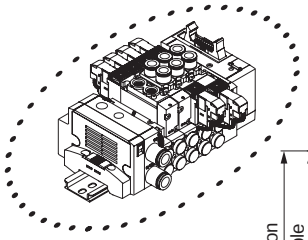

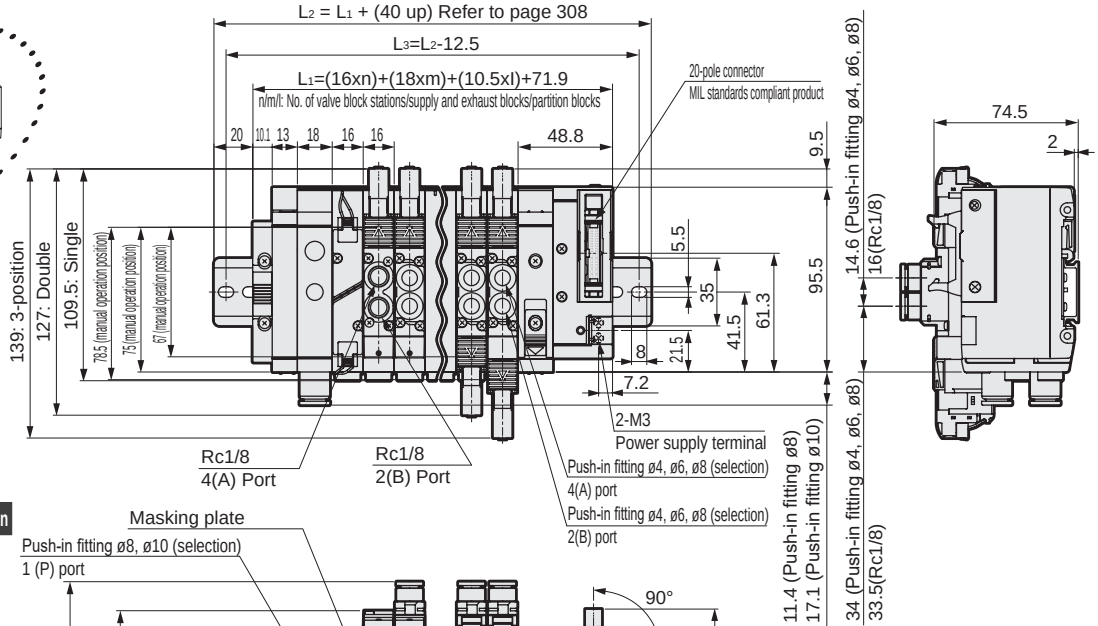

Push-in fitting bore size	*1 dimension
ø4	91.7
ø6	
ø8	
ø1/4”	92.6
ø5/16”	91.9

Female thread bore size	*2 dimension
Rc1/8	76.5
NPT1/8	77.8
G1/8	

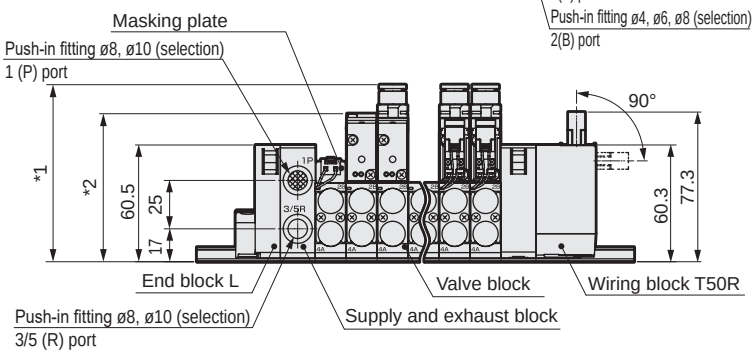

Dimensions CAD

MN4GA1

● Serial transmission (T6G1)

Note: For the 2-position single 3-port valve, either A port or B port is a plug. In addition, the two 3-port valve integrated have the same dimensions as the double model.

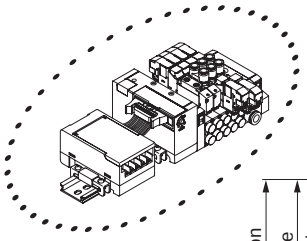

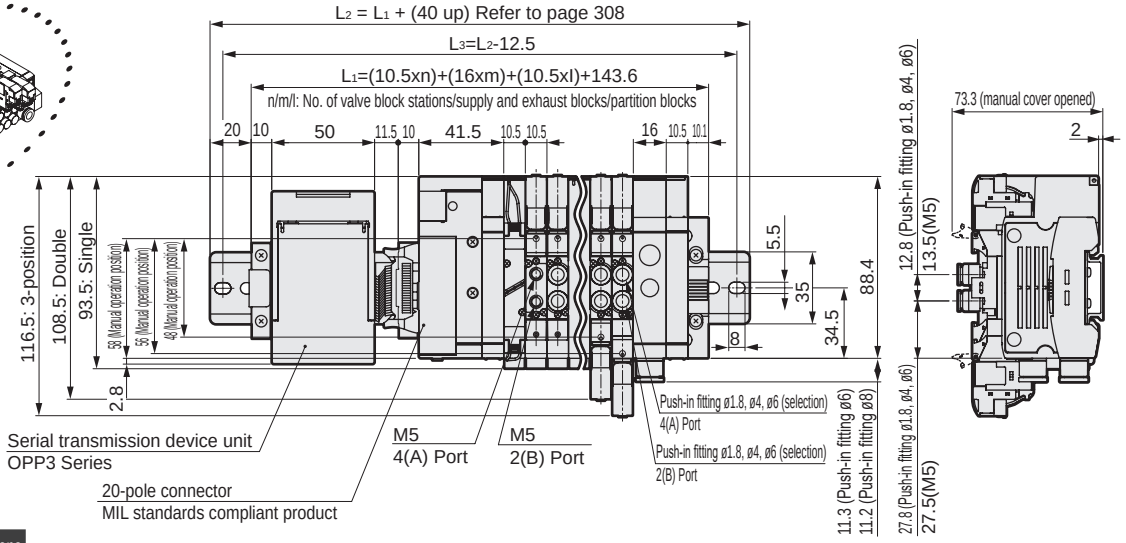

Push-in fitting bore size	* Dimensions
ø1.8	65.1
ø4	69.1
ø6	70.3
ø1/8”	69.6
ø5/32”	69.1

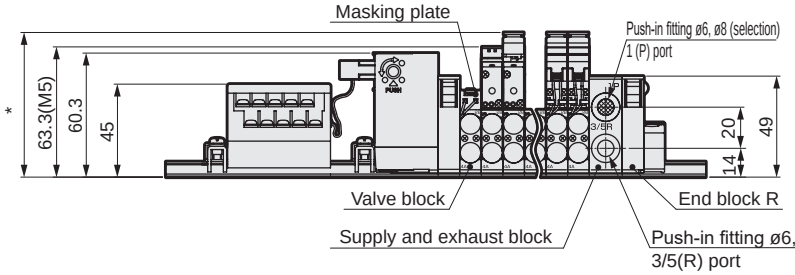

● ø1.8 barbed fitting (CF)

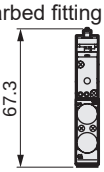

MN4GA2

● Serial transmission (T6G1)

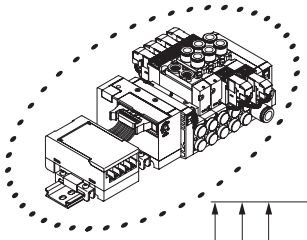

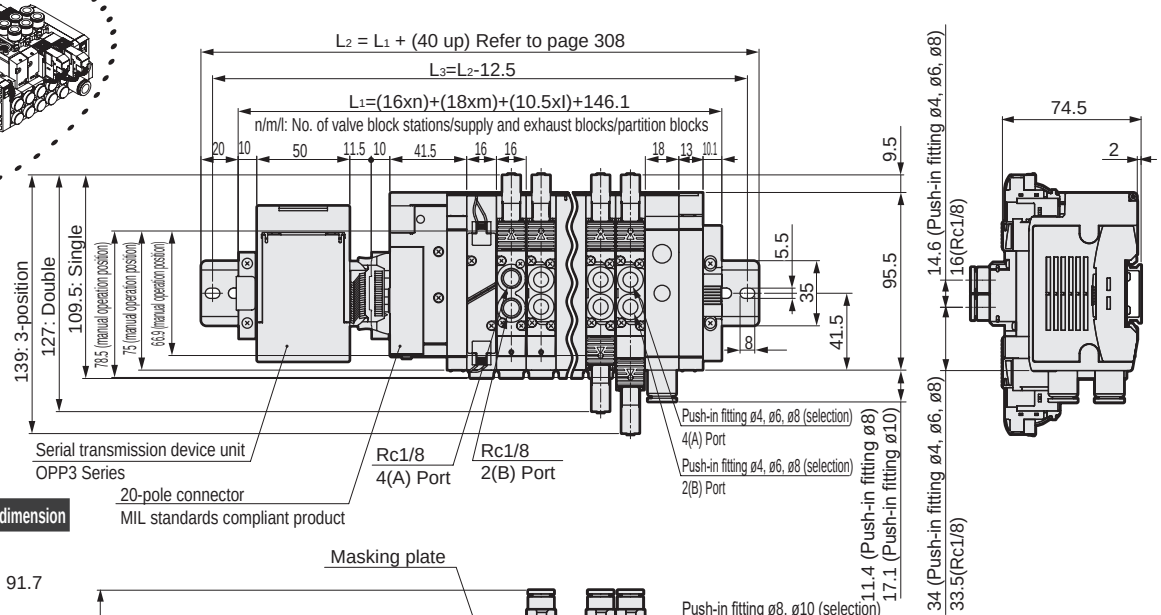

Push-in fitting bore size	*1 dimension
ø4	91.7
ø6	
ø8	
ø1/4”	92.6
ø5/16”	91.9

Female thread bore size	*2 dimension
Rc1/8	76.5
NPT1/8	77.8
G1/8	

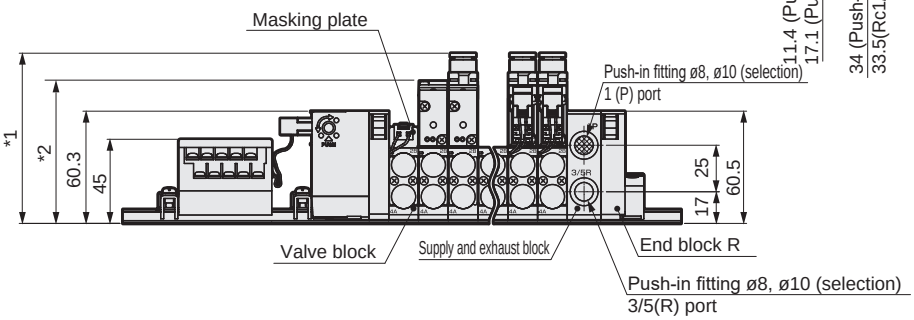

Dimensions

MN4GA1

● Thin serial transmission (T7 □)

Note: For the 2-position single 3-port valve, either A port or B port is a plug. In addition, the two 3-port valve integrated have the same dimensions as the double model.

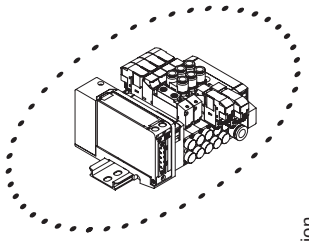

Push-in fitting bore size	* Dimensions
ø1.8	65.1
ø4	69.1
ø6	70.3
ø1/8"	69.6
ø5/32"	69.1

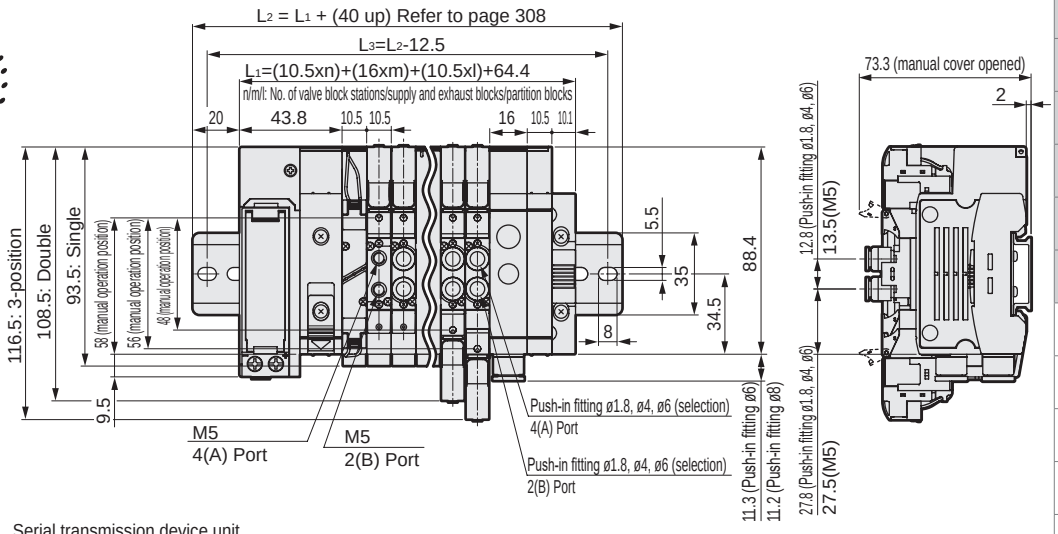

For T7S □ 1

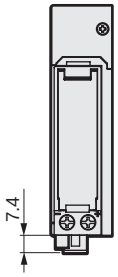

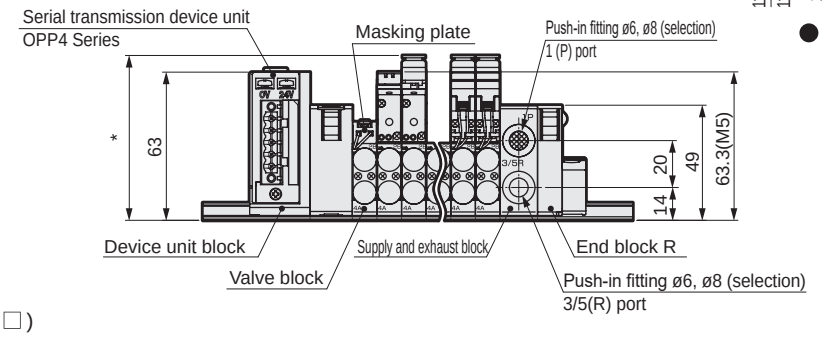

● ø1.8 barbed fitting (CF)

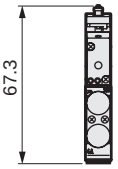

MN4GA2

● Thin serial transmission (T7 □)

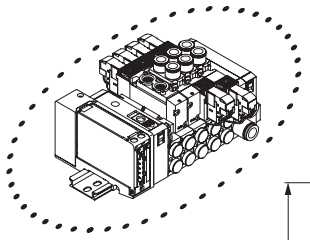

Push-in fitting bore size	*1 dimension
ø4	91.7
ø6	
ø8	
ø1/4"	92.6
ø5/16"	91.9

Female thread bore size	*2 dimension
Rc1/8	76.5
NPT1/8	77.8
G1/8	

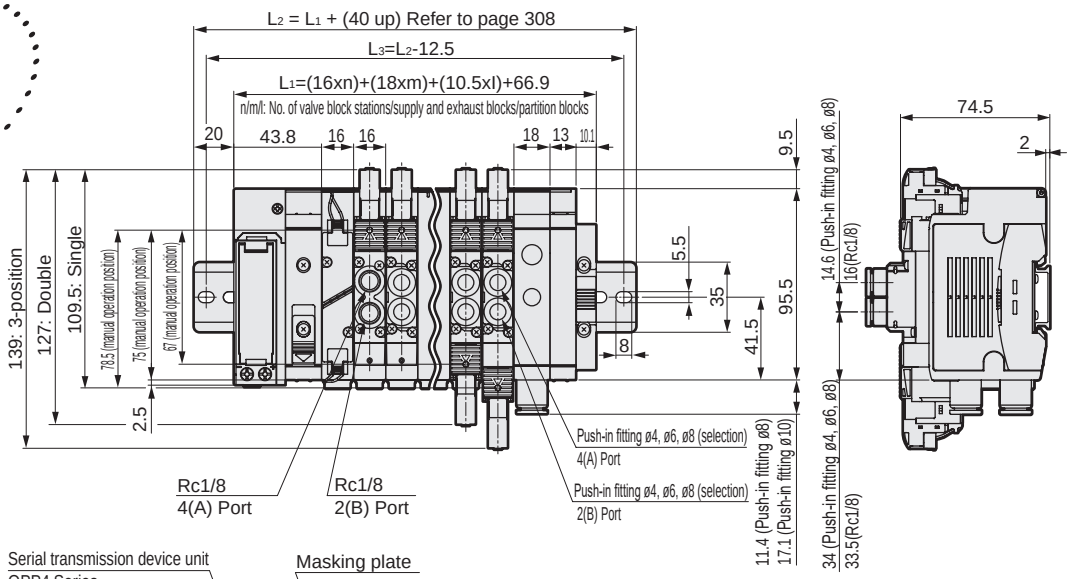

For T7S □ 1

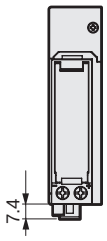

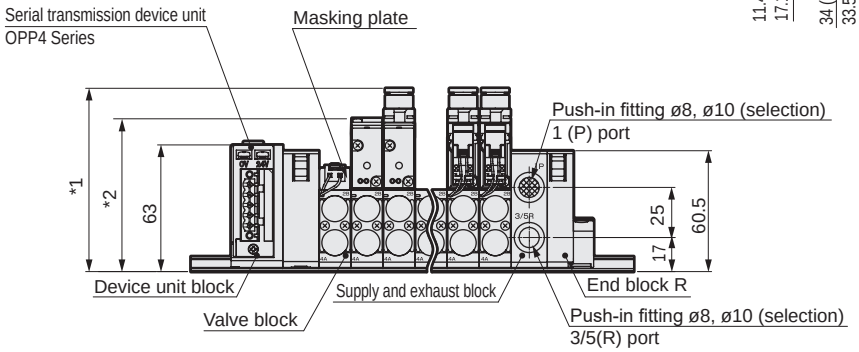

Dimensions

MN4GA1

● Thin serial transmission (T8 □)

Note: For the 2-position single 3-port valve, either port A or port B is a plug. In addition, the two 3-port valve built-in type has the same dimensions as the double model.

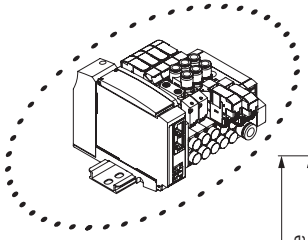

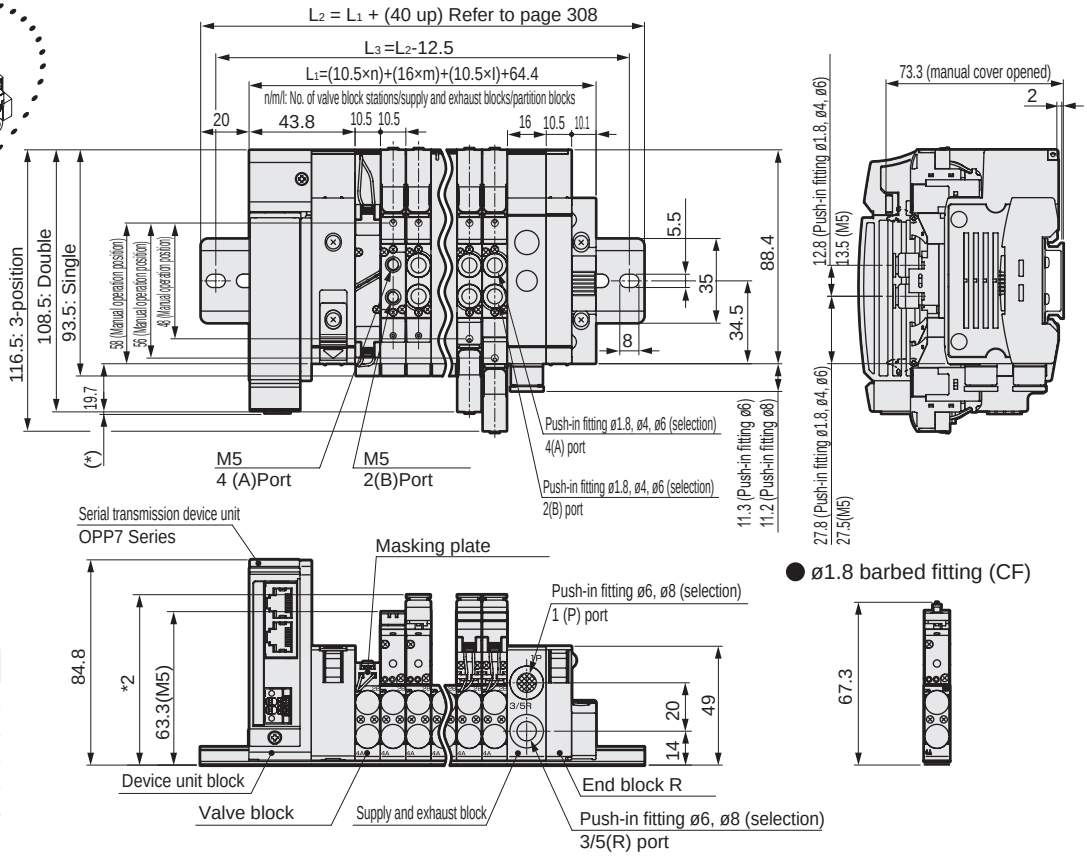

Serial transmission	*1 dimension
T8G □	1.0
T8P □	4.9
T8E □	1.5
T8D □	1.0

Push-in fitting bore size	* Dimensions
ø1.8	65.1
ø4	69.1
ø6	70.3
ø1/8"	69.6
ø5/32"	69.1

● ø1.8 barbed fitting (CF)

MN4GA2

● Thin serial transmission (T8□)

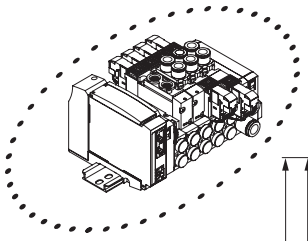

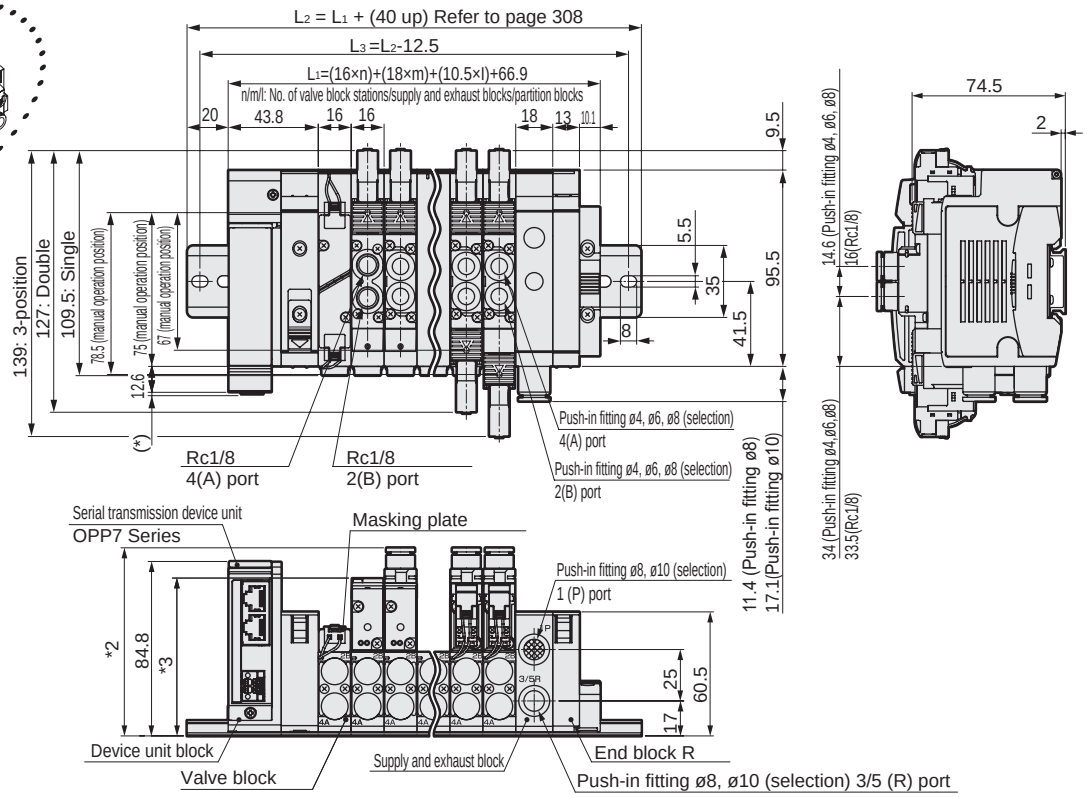

Serial transmission	*1 dimension
T8G □	1.0
T8P □	4.9
T8E □	1.5
T8D □	1.0

Push-in fitting bore size	*2 dimension
ø4	91.7
ø6	
ø8	
ø1/4"	92.6
ø5/16"	91.9

Female thread bore size	*3 dimension
Rc1/8	76.5
NPT1/8	77.8
G1/8	

Dimensions

MN4G1 Supply and exhaust block

● Fitting straight
● ø6(6) ● ø6.4(6N) ● ø8(8)

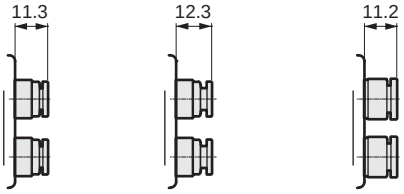

● Fitting straight, single plug
● ø6(6X) ● ø6.4(6NX) ● ø8(8X)

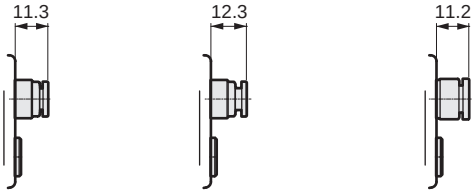

● L fitting (upward)
● ø6(6L) ● ø6.4(6LN) ● ø8(8L)

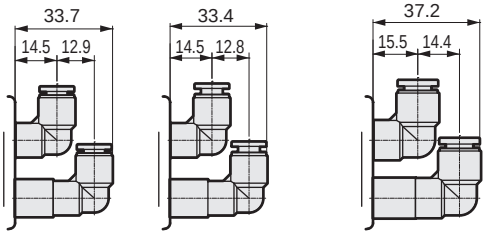

● L Fitting (downward)
● ø6(6D) ● ø6.4(6DN) ● ø8(8D)

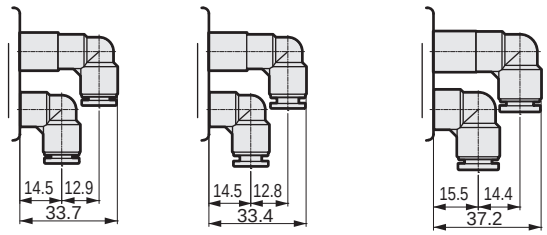

● L Fitting (upward), single plug
● ø6(6LX) ● ø6.4(6LXN) ● ø8(8LX)

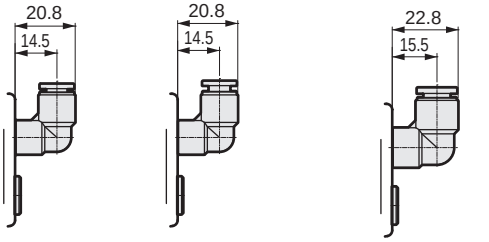

● L Fitting (downward), single plug
● ø6(6DX) ● ø6.4(6DXN) ● ø8(8DX)

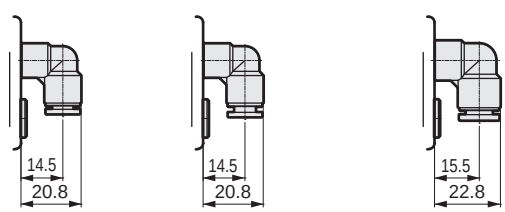

MN4G2 Supply and exhaust block

● Fitting straight
● ø8(8) ● ø10(10)

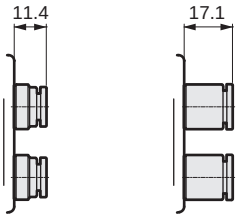

● Fitting straight, single plug
● ø8(8X) ● ø10(10X)

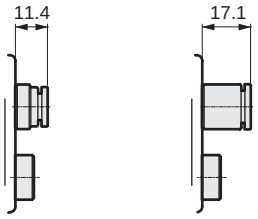

● L Fitting (upward)
● ø8(8L) ● ø10(10L)

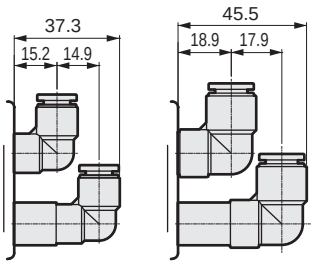

● L Fitting (downward)
● ø8(8D) ● ø10(10D)

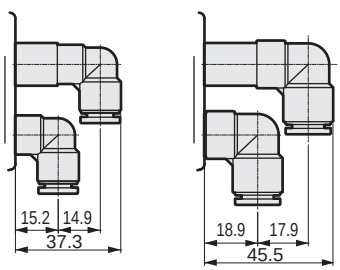

● L Fitting (upward), single plug
● ø8(8LX) ● ø10(10LX)

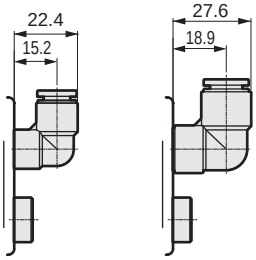

● L Fitting (downward), single plug
● ø8(8DX) ● ø10(10DX)

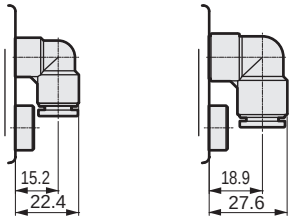

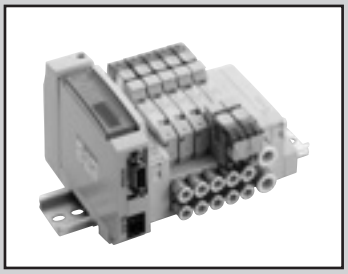

Reduced wiring block manifold
Base piping

MN4GB1/2-T* Series

● Cylinder bore size: ø20 to ø80

RoHS CAD

JIS symbol

● Two 3-port valves integrated

(A side valve: NC, B side valve: NC)

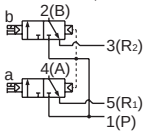

(A side valve: NC, B side valve: NO)

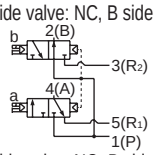

(A side valve: NO, B side valve: NC)

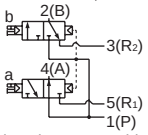

(A side valve: NO, B side valve: NO)

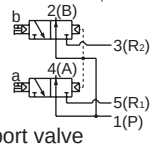

● 5-port valve

2-position single

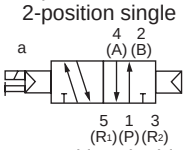

2-position double

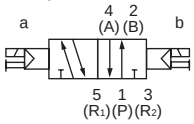

3-position all ports closed

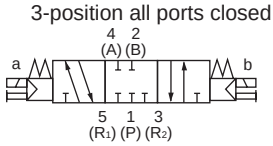

3-position A/B/R connection

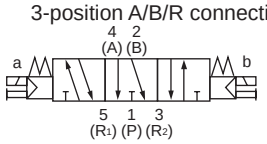

3-position P/A/B connection

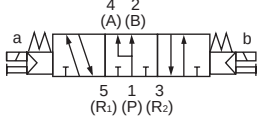

Manifold common specifications

Item	Description
Manifold	Block manifold
Mounting method	DIN rail mount
Supply and exhaust method	Common supply/common exhaust (With internal exhaust check valve)
Pilot exhaust method	Main valve/pilot valve common exhaust (Pilot exhaust check valve built-in)
Piping direction	Lateral direction from base
Valve and operation	Pilot operated soft spool valve
Working fluid	Compressed air
Max. working pressure MPa	0.7 (≈100 psi, 7 bar)
Min. working pressure MPa	0.2 (≈29 psi, 2 bar) (*3)
Proof pressure MPa	1.05 (≈150 psi, 10.5 bar)
Ambient temperature °C	-5 (23°F) to 55 (131°F) (no freezing)
Fluid temperature °C	5 (41°F) to 55 (131°F)
Manual override	Non-locking/locking common type (standard)
Lubrication (*1)	Not required
Degree of protection (*2)	Dust-proof
Vibration resistance m/s^2	50 or less
Shock resistance m/s^2	300 or less
Atmosphere	Cannot be used in corrosive gas environments

Electrical specifications

Item		Description		
Rated voltage V		T1□, T30□, T5□ 24 DC	T1□, T30□, T5□ 12 DC	T6G1, T7□, T8□ 24 DC
Voltage fluctuation range (*4)		±10%		+10%, -5%
Holding current A	Standard	0.017	0.034	0.017
	With low exoergic/ energy circuit	0.005	0.010	0.005
Power consumption W	Standard	0.4		
	With low exoergic/ energy circuit	0.1		
Thermal class		B		
Surge suppressor (*5)		Zener diode		
Indicator		LED		

*1 Use turbine oil Class 1 ISO VG32 for lubrication. Excessive or intermittent lubrication results in unstable operation.
*2 Dust-proof degree of protection. Not drip-proof. Avoid dripping water or oil, etc., during use.
*3 The working pressure range is 0 to 0.7 MPa when the external pilot (option code: K) is selected. Set the external pilot pressure between 0.2 and 0.7 MPa.
*4 T6G1, T7□ and T8□ (serial transmission) may experience voltage drops due to internal circuitry, so care should be taken when regulating voltages.
*5 If low exoergic/energy circuit or surgeless types are selected then there will be a diode.

Individual specifications

Item			MN3GB1/MN4GB1									
			T10	T11	T30	T50	T51	T52	T53	T6G1	T7*1	T8*1/2
Max. station No.		Standard wiring	16 stations	24 stations	24 stations	16 stations	18 stations	8 stations	24 stations	16 stations	8/16 stations	16/24 stations
		Double wiring	8 stations	12 stations	12 stations	8 stations	9 stations	4 stations	12 stations	8 stations	4/8 stations	8/16 stations
Max. number of solenoids			16 points	24 points	24 points	16 points	18 points	8 points	24 points	16 points	8/16 points	16/32 points
Port size	Metric fitting	A/B port	Barbed fitting ø1.8 Push-in fitting ø1.8, ø4, ø6									
		P/R-port	Push-in fitting ø6, ø8									
	Inch fitting	A/B port	Push-in fitting ø1/8", ø5/32"									
		P/R-port	Push-in fitting ø1/4", ø5/16"									

· For weight, refer to page 266.

Item			MN3GB2/MN4GB2									
			T10	T11	T30	T50	T51	T52	T53	T6G1	T7*1	T8*1/2
Max. station No.		Standard wiring	16 stations	20 stations	20 stations	16 stations	18 stations	8 stations	20 stations	16 stations	8/16 stations	16/20 stations
		Double wiring	8 stations	12 stations	12 stations	8 stations	9 stations	4 stations	12 stations	8 stations	4/8 stations	8/16 stations
Max. number of solenoids			16 points	24 points	24 points	16 points	18 points	8 points	24 points	16 points	8/16 points	16/32 points
Port size	Metric fitting	A/B port	Push-in fitting ø4, ø6, ø8									
		P/R-port	Push-in fitting ø8, ø10									
	Inch fitting	A/B port	Push-in fitting ø1/4", ø5/16"									
		P/R-port	Push-in fitting ø5/16", ø3/8"									

· For weight, refer to page 266.

Flow characteristics

Model No.	Solenoid position		P→A/B C[dm³/(s·bar)]	P→A/B b	A/B→R1/R2 C[dm³/(s·bar)]	A/B→R1/R2 b
MN3GB1 MN4GB1	Two 3-port valves integrated		0.86	0.35	1.0 (0.66)	0.15 (0.25)
	2-position		1.0	0.30	1.1 (0.72)	0.11 (0.26)
	3-position	All ports closed	0.96	0.32	1.0 —	0.14 —
		ABR connection	0.96	0.29	1.2 (0.71)	0.11 (0.30)
		PAB connection	1.1	0.31	1.0 —	0.15 —
MN3GB2 MN4GB2	Two 3-port valves integrated		1.7	0.42	2.2 (1.6)	0.15 (0.19)
	2-position		2.4	0.35	2.5 (1.7)	0.19 (0.19)
	3-position	All ports closed	2.2	0.38	2.3 —	0.17 —
		ABR connection	2.2	0.38	2.5 (1.7)	0.18 (0.20)
		PAB connection	2.3	0.29	2.3 —	0.15 —

*1: Effective cross-sectional area S and sonic conductance C are converted as S ≈ 5.0 x C.
*2: Values in ( ) are with the exhaust check valve.

Reduced wiring specifications

Item	T10	T11	T30	T50	T51	T52	T53
Type	Common terminal block M3 thread	Common terminal block Clamping method	D-sub-connector	20P flat cable connector, without power supply terminal	20P flat cable connector, without power supply terminal	10P flat cable connector, without power supply terminal	26P flat cable connector, without power supply terminal
Connector	—	—	D-sub-connector 25-pin	MIL-C-83503 standard compliant Pressure welding socket 20-pin	MIL-C-83503 standard compliant Pressure welding socket 20-pin	MIL-C-83503 standard compliant Pressure welding socket 10-pin	MIL-C-83503 standard compliant Pressure welding socket 26-pin

Serial transmission device unit specifications

Download the communication setting file from the CKD website (https://www.ckd.co.jp/en/).

Item		T6G1
Network name		CC-Link ver. 1.10
Power supply voltage	Unit side	24 VDC ±10%
	Valve side	24 VDC 10%, −5%
Current consumption	Unit side	100 mA or less (when all output points are ON)
	Valve side	15 mA or less (when all output points are OFF)
No. of output points		16 points
Occupied number		1 station
Operation display		LED (power supply and communication status)
Output		NPN

Item		T7G1	T7L1*1	T7D1	T7S1	T7SP1
Network name		CC-Link ver. 1.10	SAVE NET	DeviceNet*2	CompoNet	
Power supply voltage	Unit side	24 VDC 10%, −5% Common power supply terminal				
	Valve side					
	Communication side	—	—	11 to 25 VDC *3	14.0 VDC to 26.4 VDC	
Current consumption	Unit side	110 mA or less (when all output points are ON) Load current is not included			40 mA or less (when all output points are ON) Load current is not included	
	Valve side					
	Communication side	—	—	50 mA or less	65mA or less (all points ON: 24 VDC) 95 mA or less (all points ON: 14 VDC)	
No. of output points		16 points	16 points	16 points	16 points	
Occupied number		1 station	1 station	2 bytes	Word device 1 node (16 points)	
Operation display		LED (power supply and communication status)				
Output		NPN				PNP

Item		T8G1 / T8G2	T8GP1 / T8GP2	T8P1 / T8P2	T8PP1 / T8PP2	T8EC1 / T8EC2	T8ECP1 / T8ECP2	T8EN1 / T8EN2	T8ENP1 / T8ENP2	T8D1 / T8D2	T8DP1 / T8DP2	T8EB1 / T8EB2	T8EBP1 / T8EBP2	T8EP1 / T8EP2	T8EPP1 / T8EPP2
Communication protocol		CC-Link ver. 1.10		PROFIBUS-DP (V0)		EtherCAT		EtherNet/IP		DeviceNet		CC-Link IEF Basic		PROFINET	
Power supply voltage	Unit side	24 VDC ±10%								11 to 25 VDC		24 VDC ±10%			
	Valve side	24 VDC +10%, -5%													
Current consumption	Unit side	60 mA or less (when all output points are ON)		60 mA or less (when all output points are ON)		110 mA or less (when all output points are ON)		120 mA or less (when all output points are ON)		70 mA or less (when all output points are ON)		130 mA or less (when all output points are ON)		130 mA or less (when all output points are ON)	
	Valve side	T8□1: 15mA or less T8□2:20mA or less (when all output points are ON) Load current is not included								15 mA or less (When all output points are ON) Load current is not included					
No. of output points		T8□1: 16 points T8□2: 32 points													
Occupied number		1 station													
Operation display		LED(Power supply and communication status)													
Output		NPN output	PNP output	NPN output	PNP output	NPN output	PNP output	NPN output	PNP output	NPN output	PNP output	NPN output	PNP output	NPN output	PNP output

*1 Transmission bit rate of 128 bits and half-duplex transmission method are supported. Contact CKD for other specifications.
*2 Also compatible with DeviceNet compliant networks (DLNK, etc.)
*3 The communication power supply (V+, V- on the DeviceNet cable) is insulated from the power supply terminal (unit power supply/valve power supply).

MN4GB1/2-T* Series

Reduced wiring block manifold; base piping

How to order

● Manifold model No.

MN4GB1 **1** **0** **R** - **C6** - **T30** **W** **H** - **10** - **3**

● 3-port manifold model No.

MN3GB1 **66** **0** **R** - **C6** - **T30** **W** **H** - **10** - **3**

● Discrete valve block with solenoid valve

N4GB1 **1** **0** **R** - **C6** - A2N *1 **H** — **3**

● Discrete 3-port valve block with solenoid valve

N3GB1 **66** **0** **R** - **C6** - A2N *1 **H** — **3**

* When a cable is required, refer to page 290 and specify the cable length for *1. When not required, leave the space blank.

● Single solenoid valve

4GB1 **1** **9** **R** - **00** - **A2N** **H** — **3**

● Discrete 3-port solenoid valve

3GB1 **66** **9** **R** - **00** - **A2N** **H** — **3**

Ⓑ Solenoid position
Ⓒ Port size (*1) (*2) (*3)
Ⓐ Model No.
Ⓓ Reduced wiring connection
Ⓕ Option
Ⓖ Station No.
Ⓗ Voltage
Ⓔ Terminal/connector pin array

Code	Description		Ⓐ Model No. MN3GB1	MN3GB2	MN4GB1	MN4GB2	(N)3GB1	(N)3GB2	(N)4GB1	(N)4GB2
			Manifold: Two 3-port valves integrated		5-port valve		Discrete valve block + solenoid valve/Discrete solenoid valve			
Ⓑ Solenoid position										
1	2-position single				●	●			●	●
2	2-position double				●	●			●	●
3	3-position all ports closed				●	●			●	●
4	3-position ABR connection				●	●			●	●
5	3-position PAB connection				●	●			●	●
66	Two 3-port valves integrated (*4) (*5)	A side valve: Normally closed B side valve: Normally closed	●	●			●	●		
67		A side valve: Normally closed B side valve: Normally open	●	●			●	●		
76		A side valve: Normally open B side valve: Normally closed	●	●			●	●		
77		A side valve: Normally open B side valve: Normally open	●	●			●	●		
8	Mix manifold (for multiple solenoid positions)		●	●	●	●	●	●	●	●
Ⓒ Port size (A/B-port)										
Code	**Metric fitting/Rc thread**									
CF	ø1.8 barbed fitting (compatible tube UP-9102-**)		●		●		●		●	
C18	ø1.8 push-in fitting (compatible tube UP-9402-**)		●		●		●		●	
C4	ø4 push-in fitting		●	●	●	●	●	●	●	●
C6	ø6 push-in fitting		●	●	●	●	●	●	●	●
C8	ø8 push-in fitting			●		●		●		●
CL18	ø1.8 push-in L-fitting upward (compatible tube UP-9402-**)	(*6)	●		●		●		●	
CL4	Radial ø4 push-in L-fitting upward	(*6)	●		●		●		●	
CL6	ø6 push-in L-fitting (upward)	(*6)	●	●	●	●	●	●	●	●
CL8	ø8 push-in L-fitting (upward)	(*6)		●		●		●		●
CD18	ø1.8 push-in L-fitting downward (compatible tube UP-9402-**)		●		●		●		●	
CD4	ø4 push-in L-fitting (downward)		●		●		●		●	
CD6	ø6 push-in L-fitting (downward)		●	●	●	●	●	●	●	●
CD8	ø8 push-in L-fitting (downward)			●		●		●		●
CX	Push-in fitting mix	(*7)	●	●	●	●				
Single, plug specs	A port	B port								
CFNC	ø1.8 barbed (tube UP-9102-**)	Plug			●				●	
C18NC	ø1.8 push-in (tube UP-9402-**)	Plug			●				●	
C4NC	ø4 push-in fitting	Plug			●	●			●	●
C6NC	ø6 push-in fitting	Plug			●	●			●	●
C8NC	ø8 push-in fitting	Plug				●				●
CFNO	Plug	ø1.8 barbed fitting (compatible tube UP-9102-**)			●				●	
C18NO	Plug	ø1.8 push-in fitting (compatible tube UP-9402-**)			●				●	
C4NO	Plug	ø4 push-in fitting			●	●			●	●
C6NO	Plug	ø6 push-in fitting			●	●			●	●
C8NO	Plug	ø8 push-in fitting				●				●
CL18NC	Radial ø1.8 push-in upward (tube UP-9402-**)	Plug			●				●	
CL4NC	ø4 push-in L-fitting (upward)	Plug			●				●	
CL6NC	ø6 push-in L-fitting (upward)	Plug			●	●			●	●
CL8NC	ø8 push-in L-fitting (upward)	Plug				●				●
CL18NO	Plug	Radial ø1.8 push-in upward (tube UP-9402-**)			●				●	
CL4NO	Plug	ø4 push-in L-fitting (upward)			●				●	
CL6NO	Plug	ø6 push-in L-fitting (upward)			●	●			●	●
CL8NO	Plug	ø8 push-in L-fitting (upward)				●				●
CD18NC	Radial ø1.8 push-in downward (tube UP-9402-**)	Plug			●				●	
CD4NC	ø4 push-in L-fitting (downward)	Plug			●				●	
CD6NC	ø6 push-in L-fitting (downward)	Plug			●	●			●	●
CD8NC	ø8 push-in L-fitting (downward)	Plug				●				●
CD18NO	Plug	Radial ø1.8 push-in downward (tube UP-9402-**)			●				●	
CD4NO	Plug	ø4 push-in L-fitting (downward)			●				●	
CD6NO	Plug	ø6 push-in L-fitting (downward)			●	●			●	●
CD8NO	Plug	ø8 push-in L-fitting (downward)				●				●
Code	**Inch fitting/inch thread**									
C3N	ø1/8" push-in fitting		●		●		●		●	
C4N	ø5/32" push-in fitting		●		●		●		●	
C6N	ø1/4" push-in fitting			●		●		●		●
C8N	ø5/16" push-in fitting			●		●		●		●
CL3N	ø1/8" push-in L-fitting upward				○		○		○	
CL4N	ø5/32" push-in L-fitting upward		○		○		○		○	
CL6N	ø1/4" push-in L-fitting upward			○		○		○		○
CL8N	ø5/16" push-in L-fitting upward			○		○		○		○
CXN	Push-in fitting mix	(*7)	●	●	●	●				
Single, plug specs	A port	B port								
C3NCN	ø1/8" push-in fitting	Plug			●				●	
C4NCN	ø5/32" push-in fitting	Plug			●				●	
C6NCN	ø1/4" push-in fitting	Plug				●				●
C8NCN	ø5/16" push-in fitting	Plug				●				●
C3NON	Plug	ø1/8" push-in fitting			●				●	
C4NON	Plug	ø5/32" push-in fitting			●				●	
C6NON	Plug	ø1/4" push-in fitting				●				●
C8NON	Plug	ø5/16" push-in fitting				●				●
CL3NCN	ø1/8" push-in L-fitting (upward)	Plug			○				○	
CL4NCN	ø5/32" push-in L-fitting (upward)	Plug			○				○	
CL6NCN	ø1/4" push-in L-fitting (upward)	Plug				○				○
CL8NCN	ø5/16" push-in L-fitting (upward)	Plug				○				○
CL3NON	Plug	ø1/8" push-in L-fitting (upward)			○				○	
CL4NON	Plug	ø5/32" push-in L-fitting (upward)			○				○	
CL6NON	Plug	ø1/4" push-in L-fitting (upward)				○				○
CL8NON	Plug	ø5/16" push-in L-fitting (upward)				○				○
00	Discrete valve for mounting base						●	●	●	●

is not available.
○ indicates a custom order.

Precautions for model selection

*1 : A and B port plug specifications are available for the 2-position single only.
Specify the P/R-port bore size with the supply and exhaust block model No. in the manifold specifications sheet.
*2 : A and B ports are the same size for push-in L-fitting mix (CX).
*3 : For a discrete solenoid valve, select 00 for Port size.
*4 : Select MN4GB*80R when mixing with 4, 5-port valves.
Further, select MN3GB*80R when mixing with masking plate.
*5 : Not compatible with combination with external pilot (K).
Dimensions are the same as those of the respective 2-position double solenoid.
*6 : Simultaneously select option "L" for types other than single solenoid.
*7 : The push-in fitting cannot be mixed with the discrete valve's 4(A) or 2(B) port.

[Port size/wiring method list]

Code	Description		Ⓐ Model No. Manifold: Two 3-port valves integrated MN3GB1	MN3GB2	5-port valve MN4GB1	MN4GB2	PValve block with solenoid valve Discrete/ Single solenoid valve (N)3GB1	(N)3GB2	(N)4GB1	(N)4GB2
Ⓓ Reduced wiring (lamp and surge suppressor provided as standard) 12/24 VDC										
T10	Common terminal block (M3 thread)	Left-sided specifications	●	●	●	●				
T10R		Right-sided specifications	●	●	●	●				
T11	Common terminal block (clamping)	Left-sided specifications	●	●	●	●				
T11R		Right-sided specifications	●	●	●	●				
T30	D-sub-connector	Left-sided specifications	●	●	●	●				
T30R		Right-sided specifications	●	●	●	●				
T50	20-pin flat cable connector (with power supply terminal)	Left-sided specifications	●	●	●	●				
T50R		Right-sided specifications	●	●	●	●				
T51	20-pin flat cable connector (without power supply terminal)	Left-sided specifications	●	●	●	●				
T51R		Right-sided specifications	●	●	●	●				
T52	10-pin flat cable connector (without power supply terminal)	Left-sided specifications	●	●	●	●				
T52R		Right-sided specifications	●	●	●	●				
T53	26-pin flat cable connector (without power supply terminal)	Left-sided specifications	●	●	●	●				
T53R		Right-sided specifications	●	●	●	●				
Ⓓ Serial transmission (lamp/surge suppressor provided as standard) 24 VDC										
T6G1	CC-Link	NPN 16 points	●	●	●	●				
T7D1	DeviceNet	NPN 16 points	●	●	●	●				
T7G1	CC-Link	NPN 16 points	●	●	●	●				
T7L1	SAVE NET	NPN 16 points	●	●	●	●				
T7S1	CompoNet	NPN 16 points	●	●	●	●				
T7SP1		PNP 16 points	●	●	●	●				
T8G1	CC-Link	NPN 16 points	●	●	●	●				
T8G2		NPN 32 points	●	●	●	●				
T8GP1		PNP 16 points	●	●	●	●				
T8GP2		PNP 32 points	●	●	●	●				
T8P1	PROFIBUS-DP	NPN 16 points	●	●	●	●				
T8P2		NPN 32 points	●	●	●	●				
T8PP1		PNP 16 points	●	●	●	●				
T8PP2		PNP 32 points	●	●	●	●				
T8EC1	EtherCAT	NPN 16 points	●	●	●	●				
T8EC2		NPN 32 points	●	●	●	●				
T8ECP1		PNP 16 points	●	●	●	●				
T8ECP2		PNP 32 points	●	●	●	●				
T8EN1	EtherNet/IP	NPN 16 points	●	●	●	●				
T8EN2		NPN 32 points	●	●	●	●				
T8ENP1		PNP 16 points	●	●	●	●				
T8ENP2		PNP 32 points	●	●	●	●				
T8D1	DeviceNet	NPN 16 points	●	●	●	●				
T8D2		NPN 32 points	●	●	●	●				
T8DP1		PNP 16 points	●	●	●	●				
T8DP2		PNP 32 points	●	●	●	●				
T8EB1	CC-Link IEF Basic	NPN 16 points	●	●	●	●				
T8EB2		NPN 32 points	●	●	●	●				
T8EBP1		PNP 16 points	●	●	●	●				
T8EBP2		PNP 32 points	●	●	●	●				
T8EP1	PROFINET	NPN 16 points	●	●	●	●				
T8EP2		NPN 32 points	●	●	●	●				
T8EPP1		PNP 16 points	●	●	●	●				
T8EPP2		PNP 32 points	●	●	●	●				
A2N	Without lead wire (without socket)	with surge suppressor and indicator lamp					●	●	●	●
Ⓔ Terminal/connector pin array										
Blank	Standard wiring	(*8)	●	●	●	●	●	●	●	●
W	Double wiring	(*8)	●	●	●	●	●	●	●	●
W1	Double wiring (with single spare wiring)	(*8)(*9)	●	●	●	●	●	●	●	●
Ⓕ Option										
Blank	Manual override of non-locking/locking common		●	●	●	●	●	●	●	●
M	Manual override of non-locking		●	●	●	●	●	●	●	●
H	With exhaust check valve	(*10)	●	●	●	●	●	●	●	●
K	External pilot	(*11)			●	●			●	●
A	Ozone/coolant proof		●	●	●	●	●	●	●	●
S	Surgeless	(*12)	●	●	●	●	●	●	●	●
E	Low exoergic/energy saving circuit	(*12)(*13)	●	●	●	●	●	●	●	●
L	With pipe adaptor		●	●	●	●	●	●	●	●
Q	Reduced wiring duct	(*17)	●	●	●	●	●	●	●	●
F	Port A/B filter built in	(*14)	●	●	●	●	●	●	●	●
X	Non-locking exhaust structure	(*18)			●	●				
X1	Locking exhaust structure	(*18)			●	●				
Z1	Air supply spacer	(*15)	●	●	●	●				
Z2	In-stop valve spacer	(*15)(*16)	●	●	●	●				
Z3	Exhaust spacer	(*15)	●	●	●	●				
Z6	Spacer pilot check valve	(*15)			●	●				
Ⓖ Station No.										
1	1 stations		●	●	●	●				
to	to									
24	24 stations (Max. station number for MN4GB2 is 20.)									
Ⓗ Voltage										
3	24 VDC		●	●	●	●	●	●	●	●
4	12 VDC		●	●	●	●	●	●	●	●

Ozone-proof specifications • Coolant proof specifications

Can be selected with “How to order” Item Ⓕ option “A” above.

Clean-room specifications

● Clean room compatible specifications

** - Voltage - **P7***

Specifications for rechargeable battery (Catalog No. CC-1226A)

● For use in the rechargeable battery manufacturing process, materials used for air path and sliding section are limited

** - Voltage - **P4**

CE marking specifications

** - Voltage - **ST**

• Standard voltage of 24 VDC or less is CE marking-compatible even if the model No. is not indicated with "ST".

⚠ Precautions for model selection

*8: Blank: The wiring will be based on the type of valve used.
W*: All wired for double solenoid valves regardless of the type of valve used.

*9: Spare wiring (A type socket assembly) is included on the cap side for single types. A holder for retaining the socket assembly is included for single unit valves (A2N). For details, refer to page 304. Not compatible with combination with port size C*NC or C*NO.

*10: 3-position all ports closed and PAB connection are not provided with the exhaust check valve specifications (H). Refer to page 851 for details on the exhaust check valve.

*11: Consult with CKD when using vacuum with external pilot (K).

*12: In addition, surgeless “S” and low exoergic/energy saving circuit “E” cannot be selected together.

*13: Surgeless specifications.

*14: A filter is built into port P as standard.

*15: Specify the spacer mounting position and quantity on the manifold specifications sheet. Stacking of spacers is not possible. Combination with the masking plate is not supported. Cannot be selected together with push-in L-fitting (upward). For details, refer to page 297 to page 301.

*16: Not compatible in combination with external pilot (K).

*17: When radial upward push-in fittings are selected, only 2-position single is supported.

*18: Compatible only with MN4GB1 and MN4GB2 solenoid positions 3 and 4.

Manifold components explanation and parts list

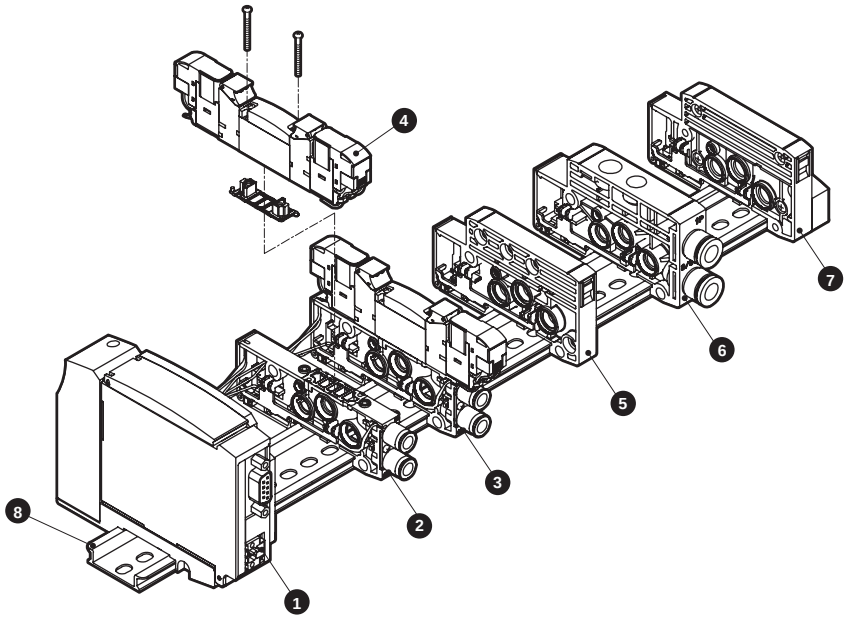

List of main components (refer to pages 286 to 305 for details)

No.	Component name	Model No. (example)	No.	Component name	Model No. (example)
1	Wiring block (*)	N4G1R-T8P1	5	Partition block	N4G1R-S
2	Discrete valve block	N4GB1R-V2-C6	6	Supply and exhaust block	N4G1R-Q-8
3	Discrete valve block with solenoid valve	N4GB120R-C6-A2NH-3	7	End block R	N4G1R-ER
4	Solenoid valve body	4GB129R-00-A2NH-3	8	DIN rail	N4GR-BAA (Length)

Note: Wiring block cannot be ordered as a single item.

B type reduced wiring weight

4GB1

(g)

Part name	Model No.	Weight	Part name	Model No.	Weight	Part name	Model No.	Weight
Valve block with solenoid valve	N4GB110R-C6-A2N-3	69	End block	N4G1R-E*	60	Wiring block	N4G1R-T10(R)	207
	N4GB120R-C6-A2N-3	88		N4G1R-EX*	60		N4G1R-T30(R)	165
	N4GB1$\frac{3}{4}$0R-C6-A2N-3	89	Partition block	N4G1R-S	45		N4G1R-T50(R)	167
	N3GB1660R-C6-A2N-3	88	Valve block	N4GB1R-V1-C*	33		N4G1R-T6G1	295
Valve block with masking plate	N4GB1R-MP*-C6	37		N4GB1R-V2-C*	35		N4G1R-T7*	203
Supply and exhaust block	N4G1R-Q-8	58	DIN rail	N4GR-BAA (Length)	0.19/mm		N4G1R-T8*	229
	N4G1R-QK-8	60						

Note: Wiring block cannot be ordered as a single item.

4GB2

(g)

Part name	Model No.	Weight	Part name	Model No.	Weight	Part name	Model No.	Weight
Valve block with solenoid valve	N4GB210R-C8-A2N-3	130	End block	N4G2R-E*	84	Wiring block	N4G2R-T10(R)	223
	N4GB220R-C8-A2N-3	149		N4G2R-EX*	85		N4G2R-T30(R)	182
	N4GB2$\frac{3}{4}$0R-C8-A2N-3	160	Partition block	N4G2R-S	60		N4G2R-T50(R)	184
	N3GB2660R-C8-A2N-3	149	Valve block	N4GB2R-V1-C*	55		N4G2R-T6G1	312
Valve block with masking plate	N4GB2R-MP*-C*	69		N4GB2R-V2-C*	57		N4G2R-T7*	204
Supply and exhaust block	N4G2R-Q-10	83	DIN rail	N4GR-BAA (Length)	0.19/mm		N4G2R-T8*	242
	N4G2R-QK-10	85						

Note: Wiring block cannot be ordered as a single item.

Parts list

Applicable	Part name		Model No.
Valve 4G1	ø1.8 barbed		4G1R-JOINT-CF
	ø1.8 straight		4G1R-JOINT-C18
	ø4 straight		4G1R-JOINT-C4
	ø6 straight		4G1R-JOINT-C6
	ø1.8 elbow		4G1R-JOINT-CL18, CLL18
	ø4 elbow		4G1R-JOINT-CL4, CLL4
	ø6 elbow		4G1R-JOINT-CL6, CLL6
	ø1/8” straight		4G1R-JOINT-C3N
	ø5/32” straight		4G1R-JOINT-C4N
	ø1/8” elbow	*1	4G1R-JOINT-CL3N
	ø5/32” elbow	*1	4G1R-JOINT-CL4N
	Plug cartridge		4G1R-JOINT-CPG
Valve 4G2	ø4 straight		4G2R-JOINT-C4
	ø6 straight		4G2R-JOINT-C6
	ø8 straight		4G2R-JOINT-C8
	ø6 elbow		4G2R-JOINT-CL6, CLL6
	ø8 elbow		4G2R-JOINT-CL8, CLL8
	ø1/4” straight		4G2R-JOINT-C6N
	ø5/16” straight		4G2R-JOINT-C8N

Applicable	Part name		Model No.
Valve 4G2	ø1/4” elbow	*1	4G2R-JOINT-CL6N
	ø5/16” elbow	*1	4G2R-JOINT-CL8N
	Plug cartridge		4G2R-JOINT-CPG
Common	Coil assembly		4GR-A2N-[*2]-COIL-[*3] *2: Ozone/coolant proof (blank, A) Surgeless (S) Low exoergic/energy circuit (E) *3: Voltage (1, 3, 4)
Manifold	Expansion socket assembly (Details on page 837)		For a side solenoid N4GR-SOCKET-ASSY-[selection No.]
			For b side solenoid N4GR-RELAY-SOCKET-[selection No.]

*1: Available as custom order.

Dimensions CAD

MN4GB1

Note: The two 3-port valve integrated have the same dimensions as the double.

● Common terminal block (M3 thread) left side (T10)

Note: Clamping specification (T11) is also available.
Dimensions are the same as T10.

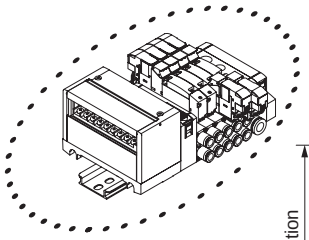

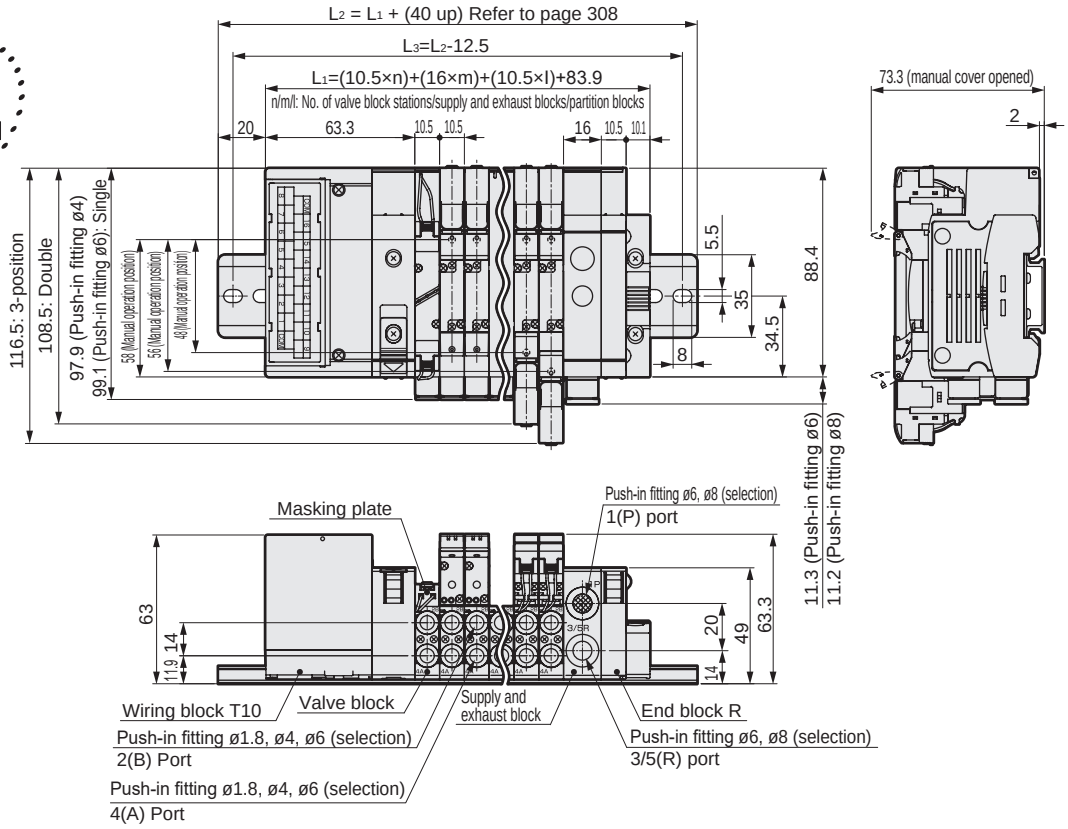

● Common terminal block (M3 thread) right side (T10R)

Note: Refer to page 276 for dimensions of the push-in L-fitting.

Note: Clamping specification (T11R) is also available.
Dimensions are the same as T10R.

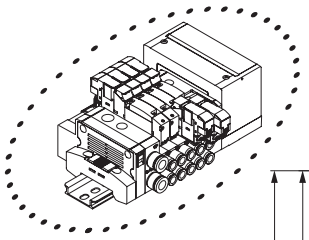

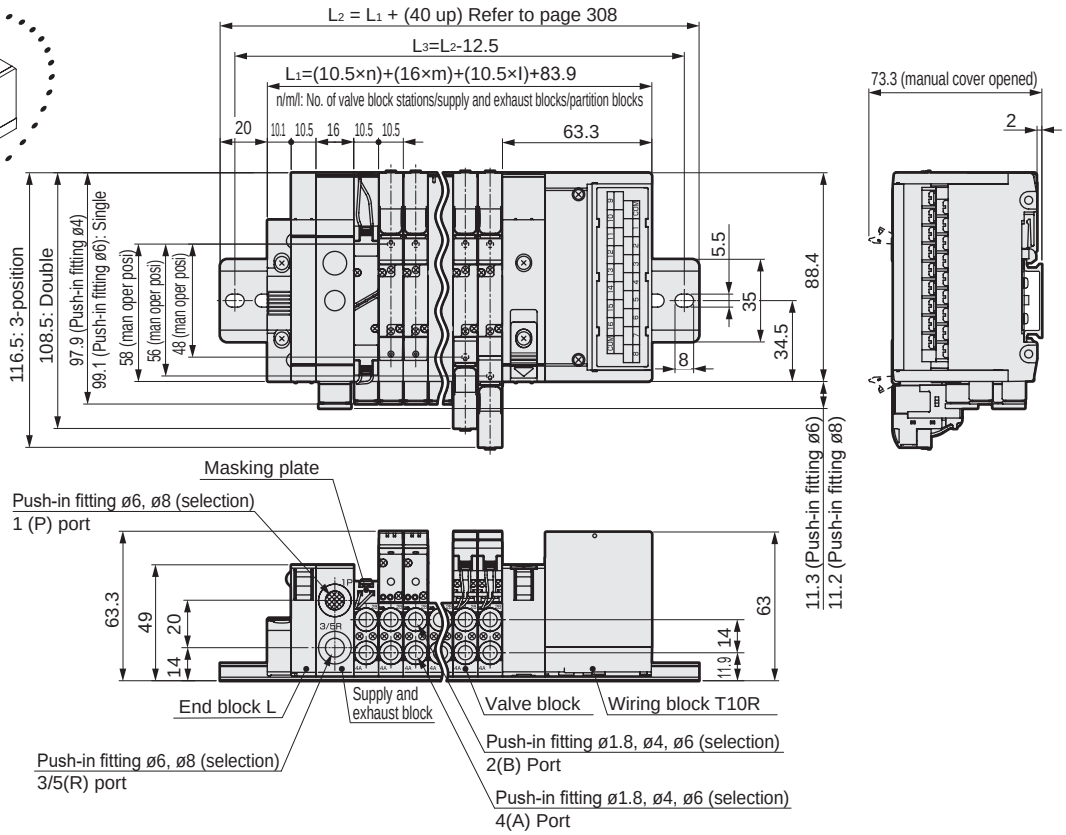

Dimensions CAD

MN4GB2

Note: The two 3-port valve integrated have the same dimensions as the double.

● Common terminal block (M3 thread) left side (T10)

Note: Clamping specification (T11) is also available.
Dimensions are the same as T10.

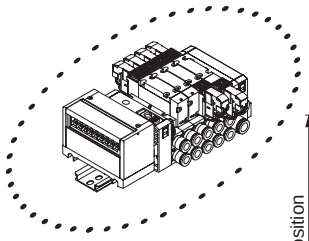

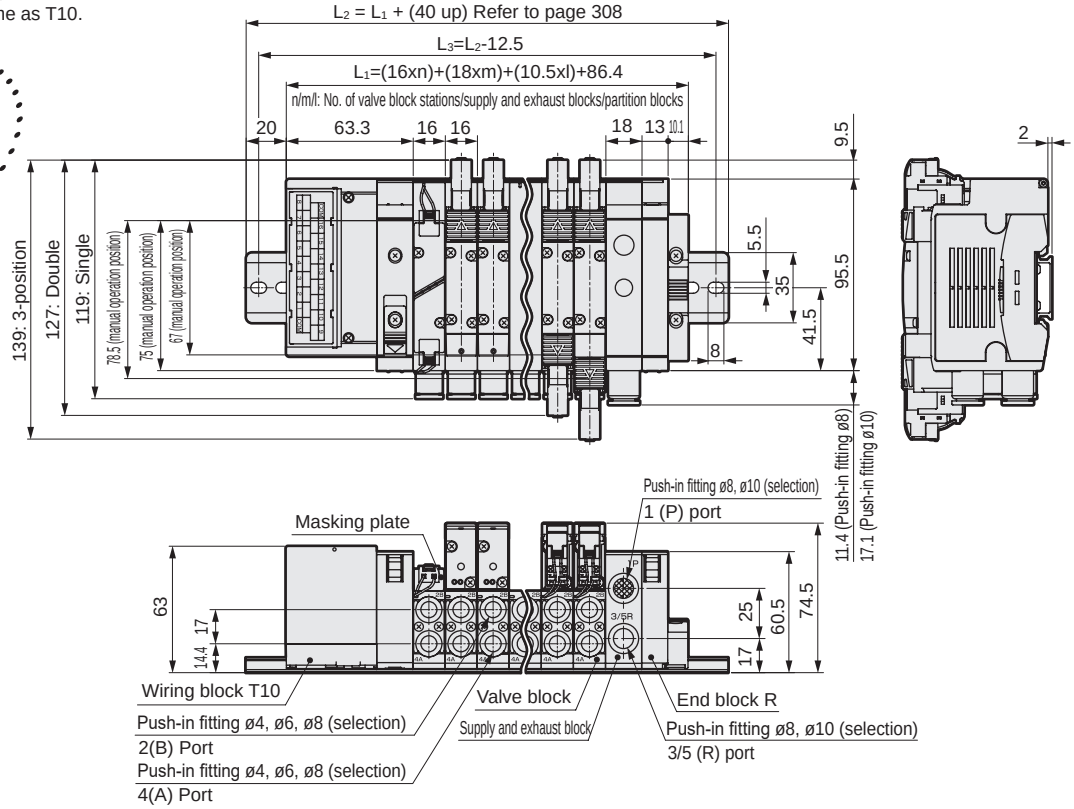

● Common terminal block (M3 thread) right side (T10R)

Note: Clamping specification (T11R) is also available.
Dimensions are the same as T10R.

Note: Refer to page 278 for dimensions of the push-in L fitting.

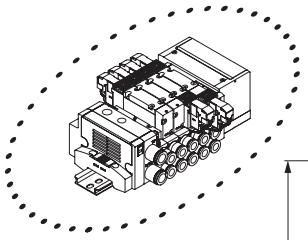

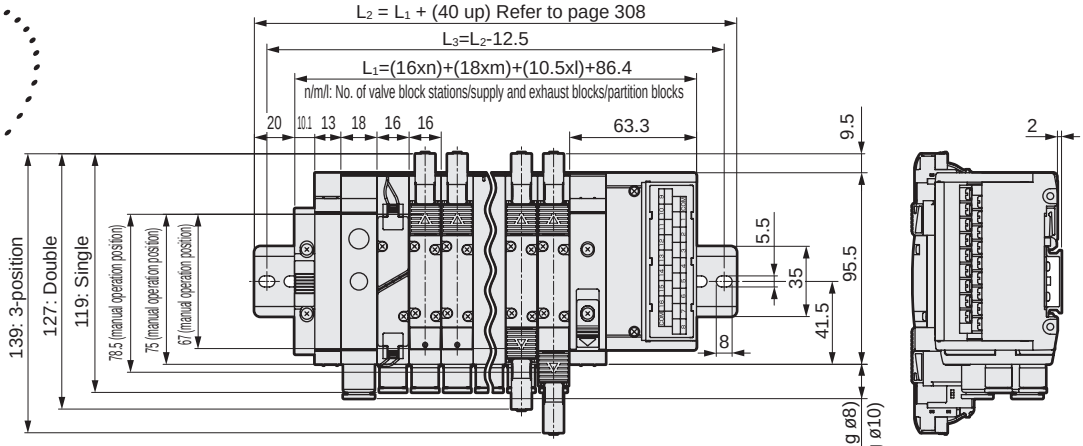

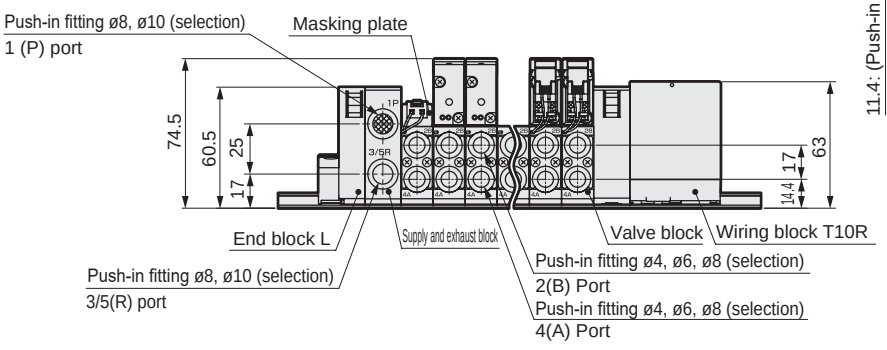

Dimensions

MN4GB1

Note: The two 3-port valve integrated have the same dimensions as the double.

● D sub-connector left side (T30)

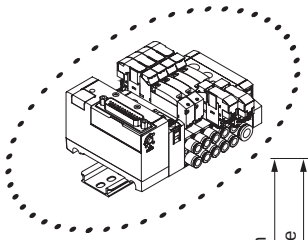

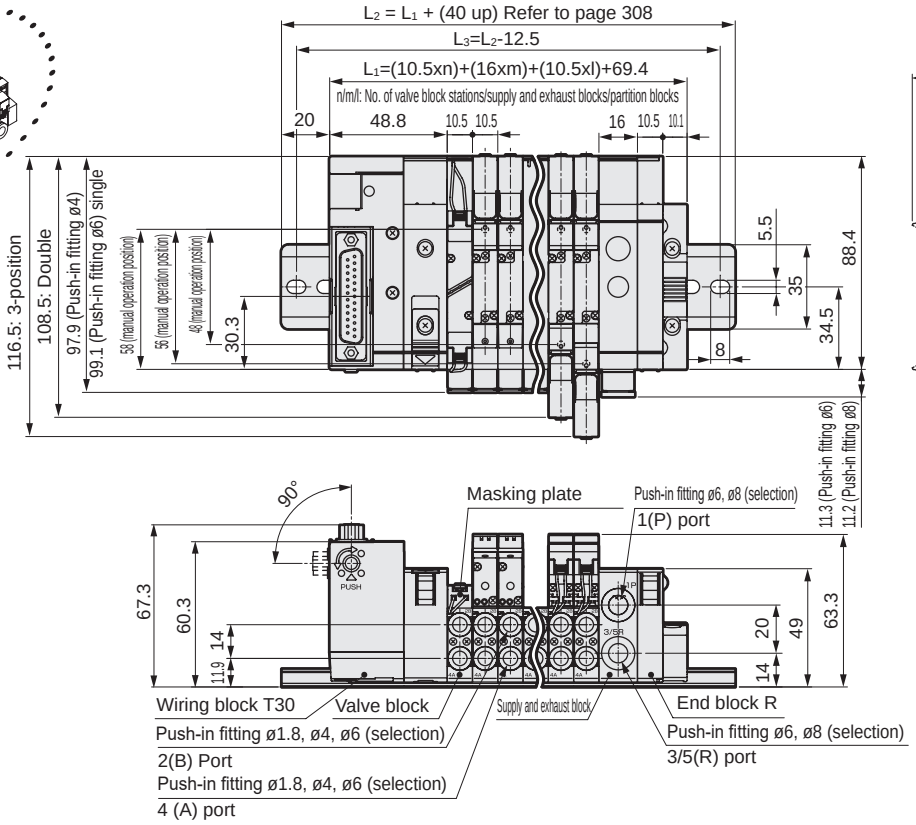

● D sub-connector right side (T30R)

Note: Refer to page 276 for dimensions of the push-in L fitting.

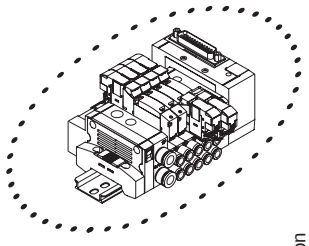

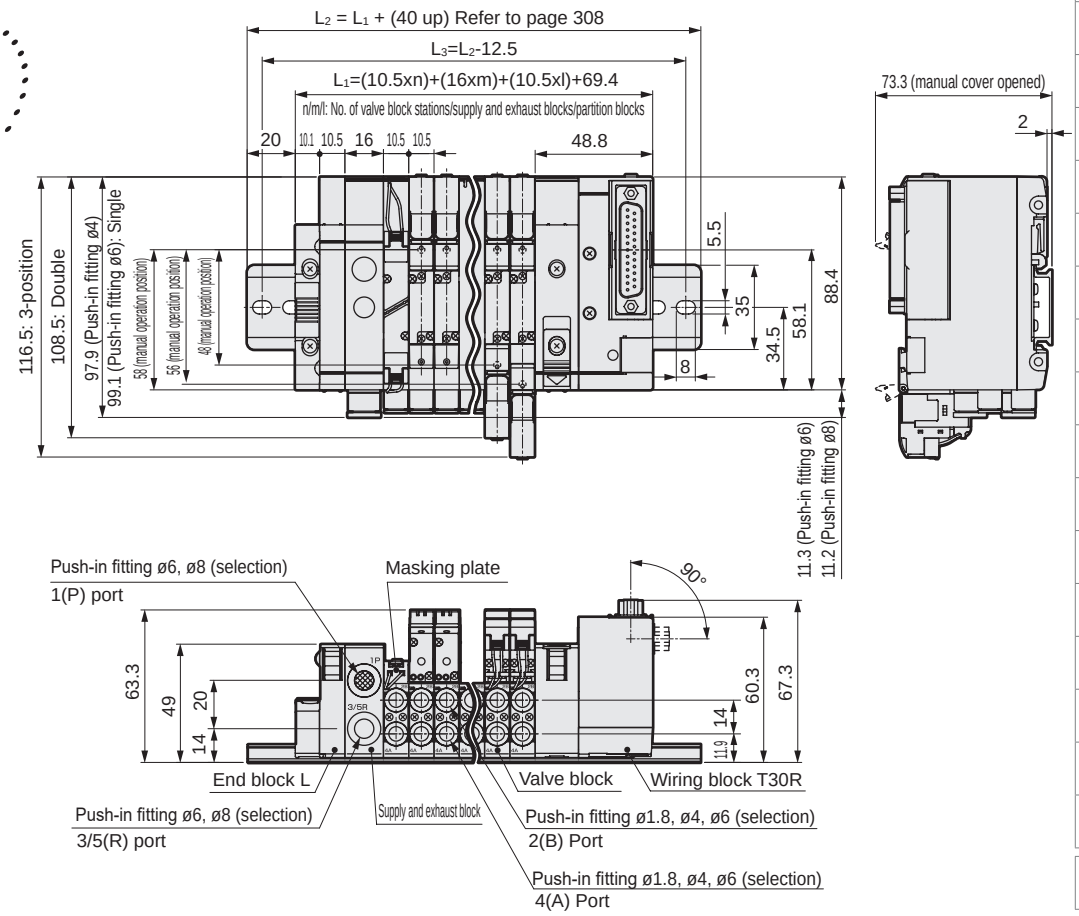

Dimensions CAD

MN4GB2

Note: The two 3-port valve integrated have the same dimensions as the double.

● D sub-connector left side (T30)

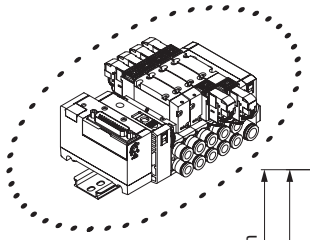

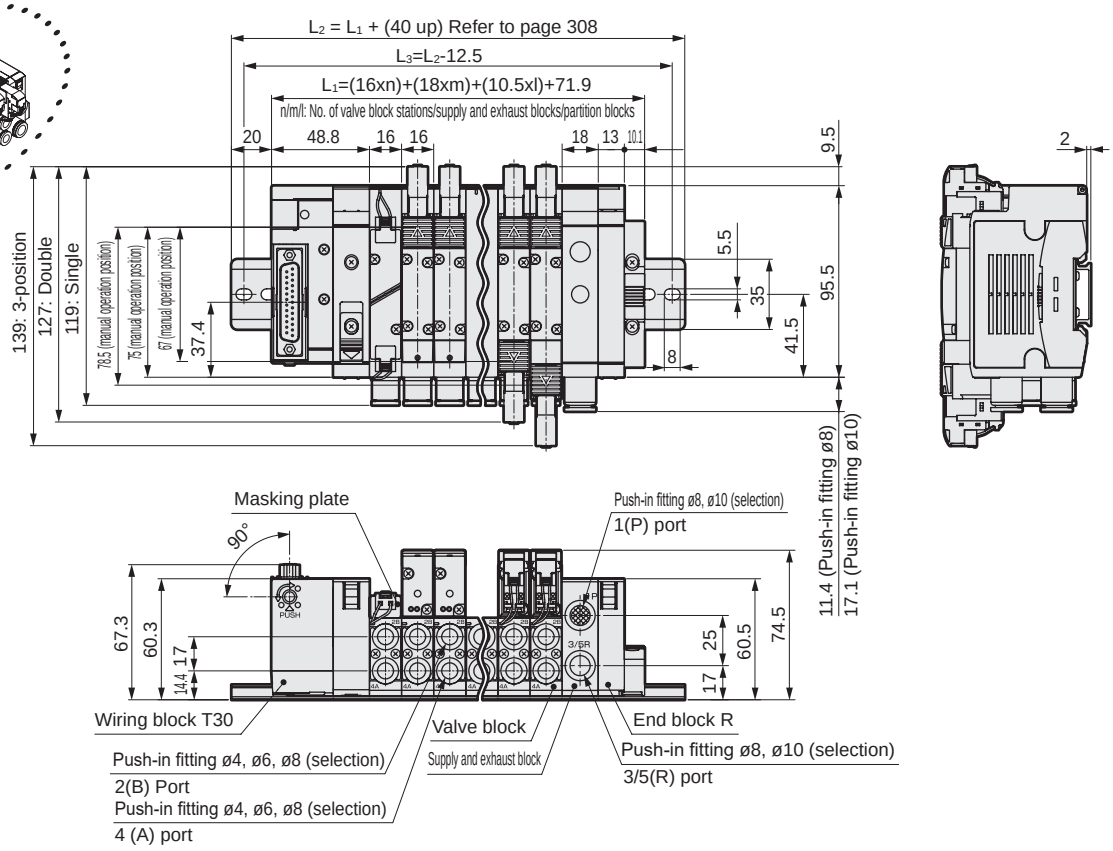

● D sub-connector right side (T30R)

Note: Refer to page 278 for dimensions of the push-in L fitting.

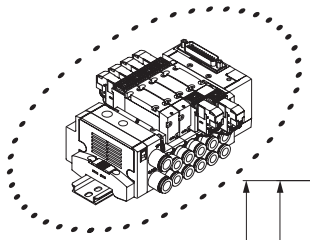

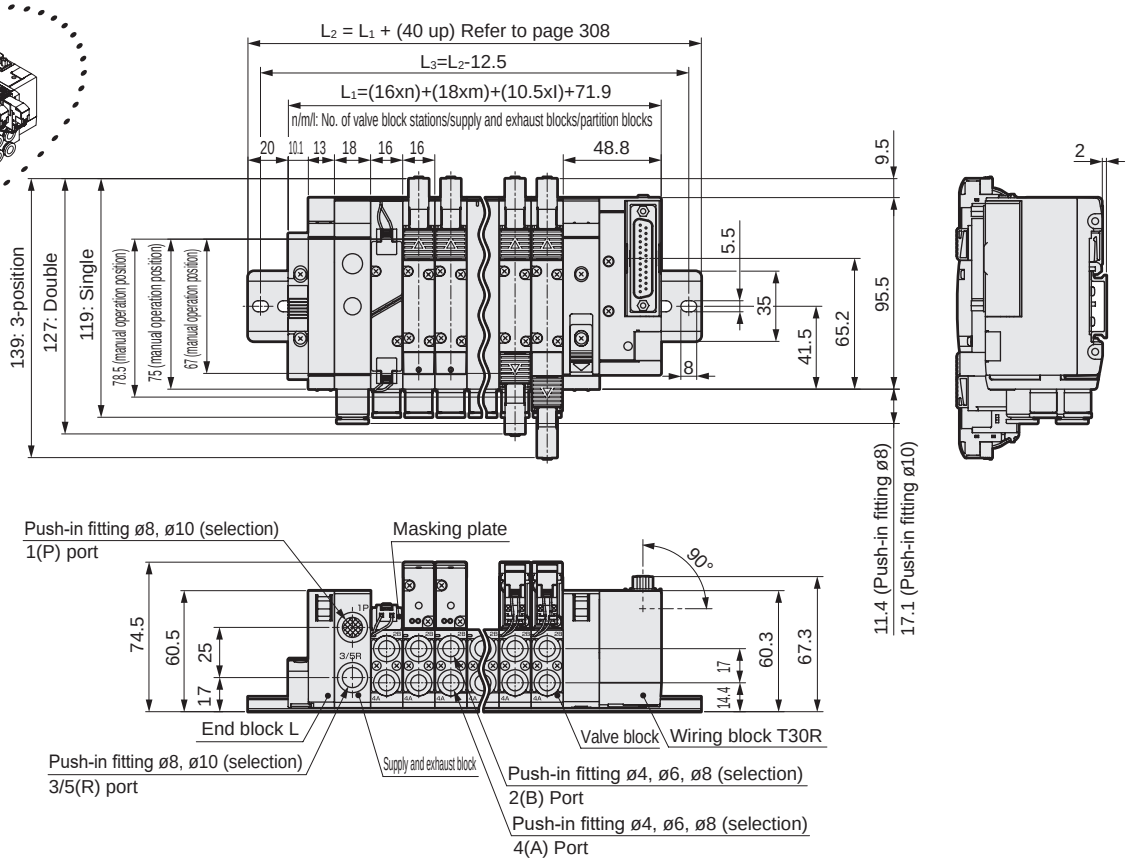

Dimensions CAD

MN4GB1

*1: T51, T52, and T53 are also available as flat cable connector. Dimensions are the same as T50.
*2: The two 3-port valve integrated have the same dimensions as the double.

● Flat cable connector left side (T50)
with power supply terminal

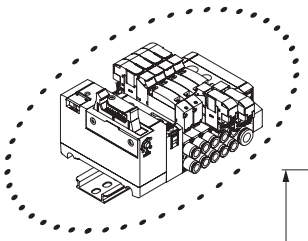

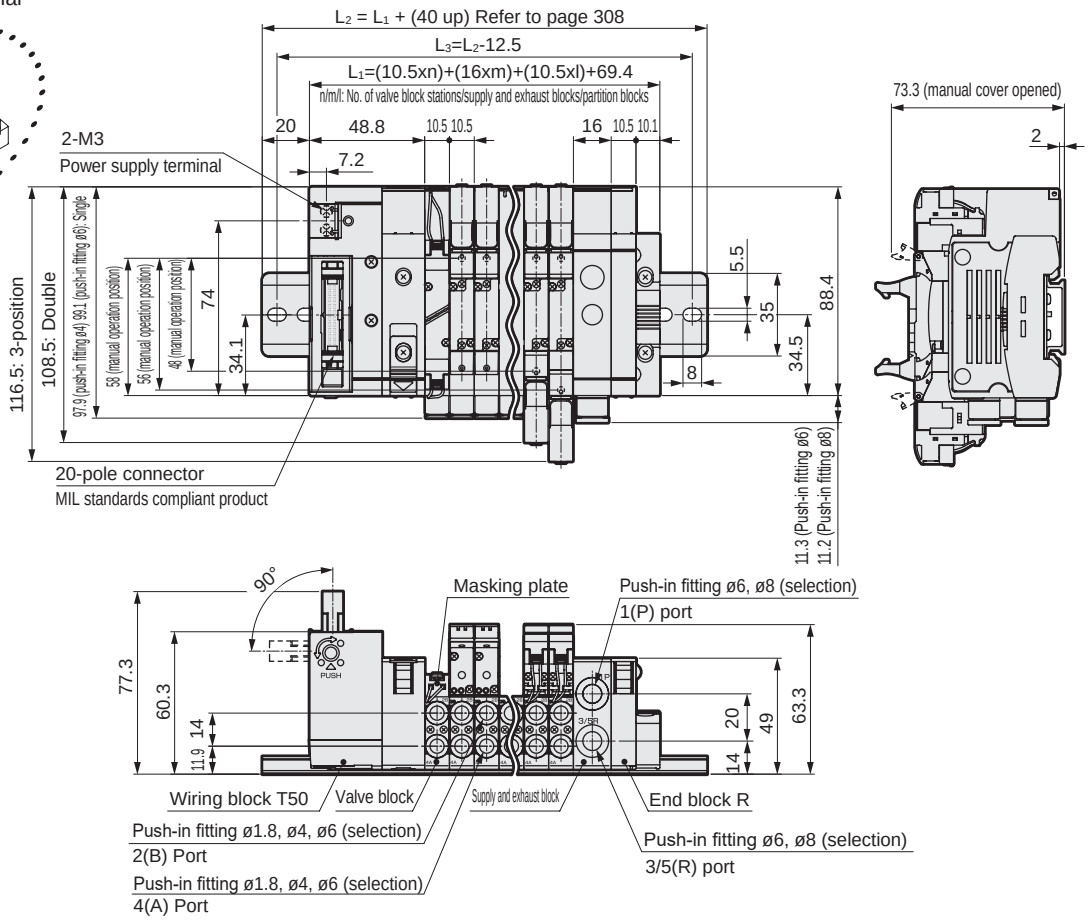

● Flat cable connector right side (T50R)
with power supply terminal

Note: Refer to page 276 for dimensions of the push-in L fitting.

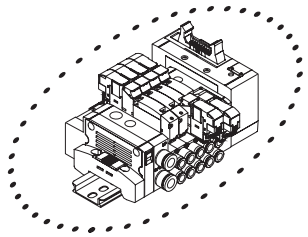

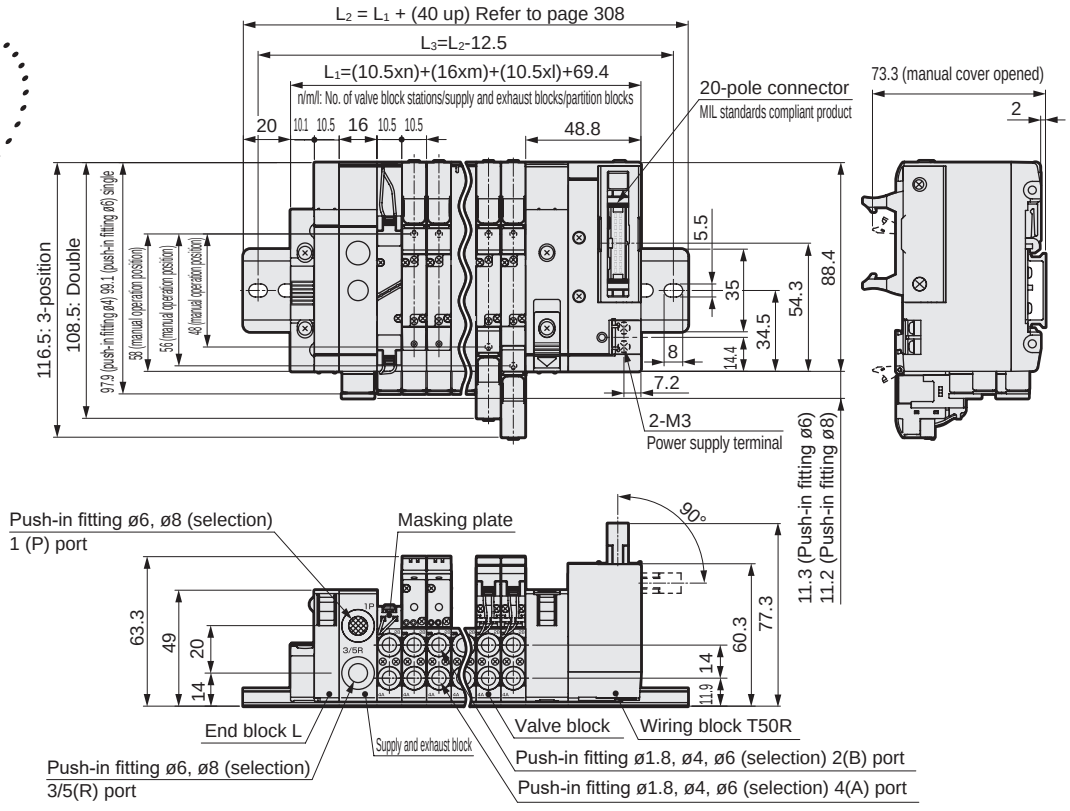

Dimensions CAD

MN4GB2

*1: T51, T52, and T53 are also available as flat cable connector. Dimensions are the same as T50.
*2: The two 3-port valve integrated have the same dimensions as the double.

● Flat cable connector left side with power supply terminal (T50)

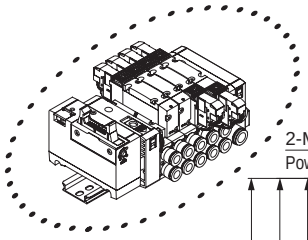

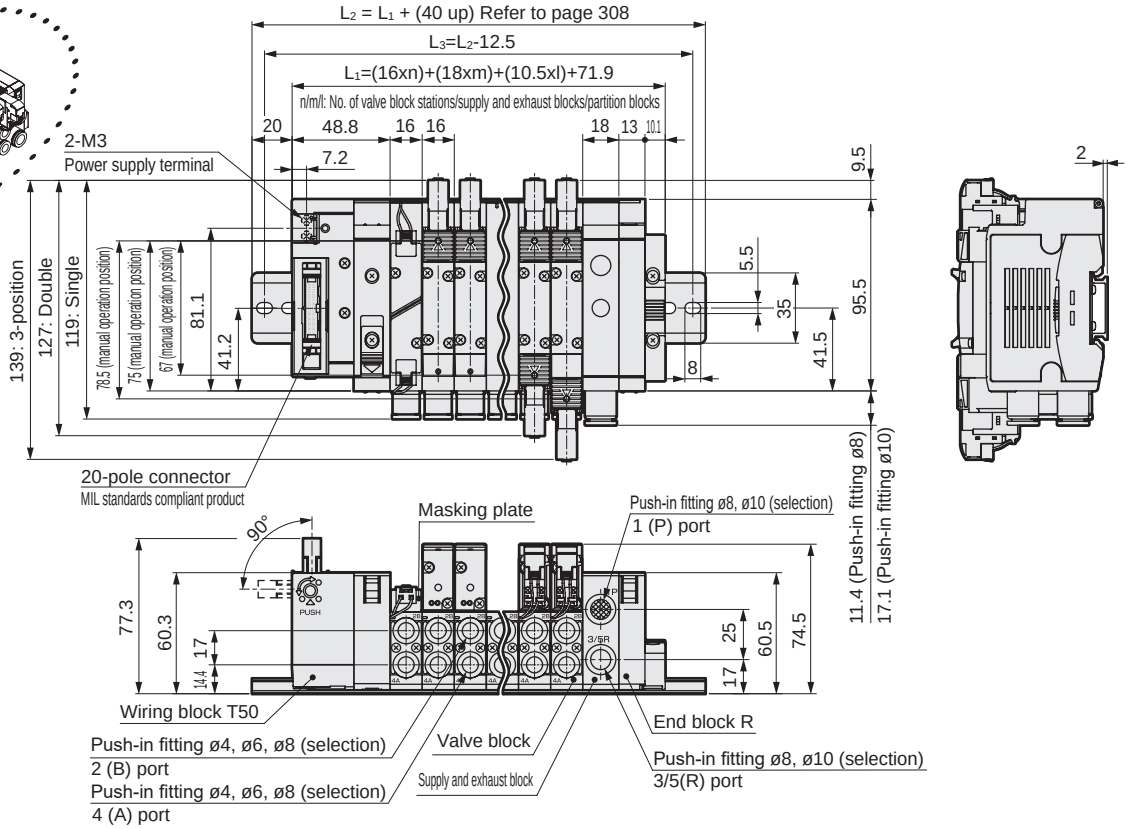

● Flat cable connector right side with power supply terminal (T50R)

Note: Refer to page 278 for dimensions of the push-in L fitting.

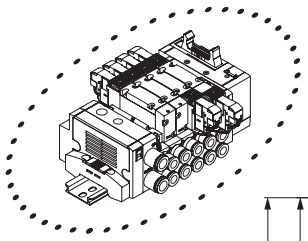

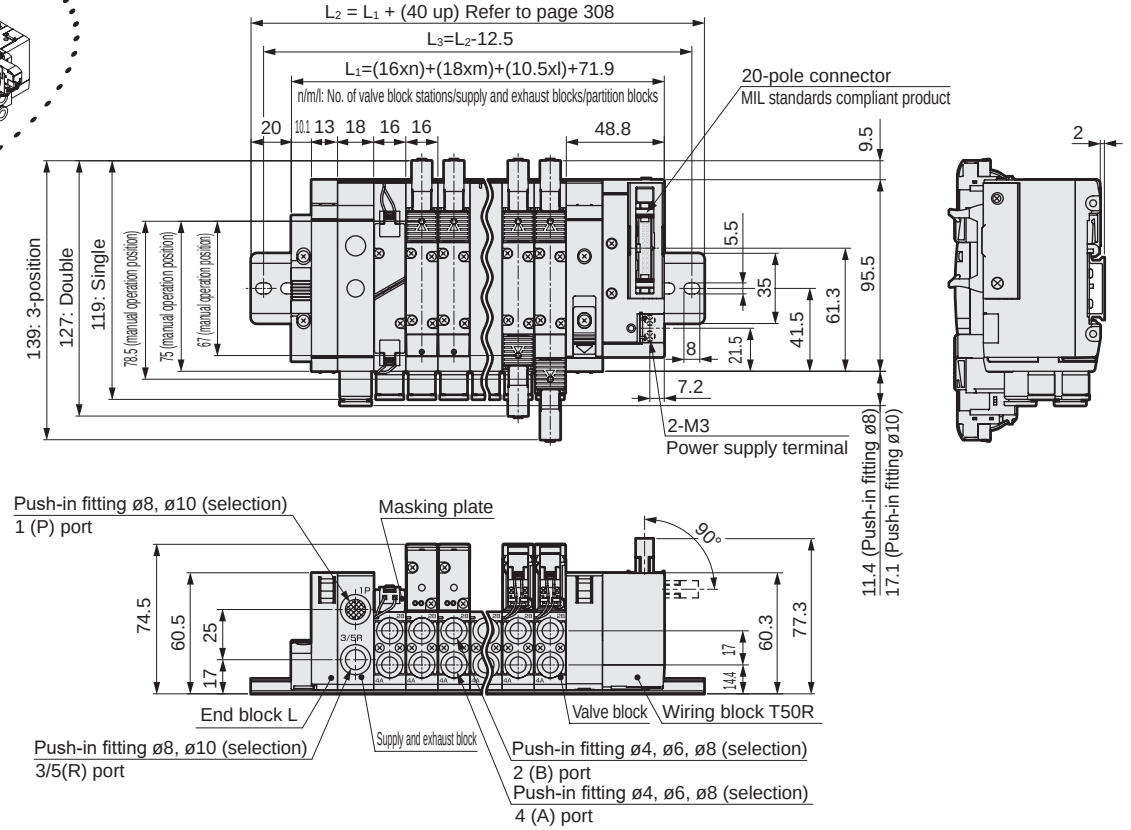

Dimensions CAD

MN4GB1

Note: The two 3-port valve integrated have the same dimensions as the double.

● Serial transmission (T6G1)

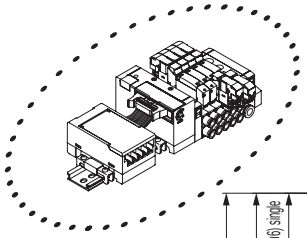

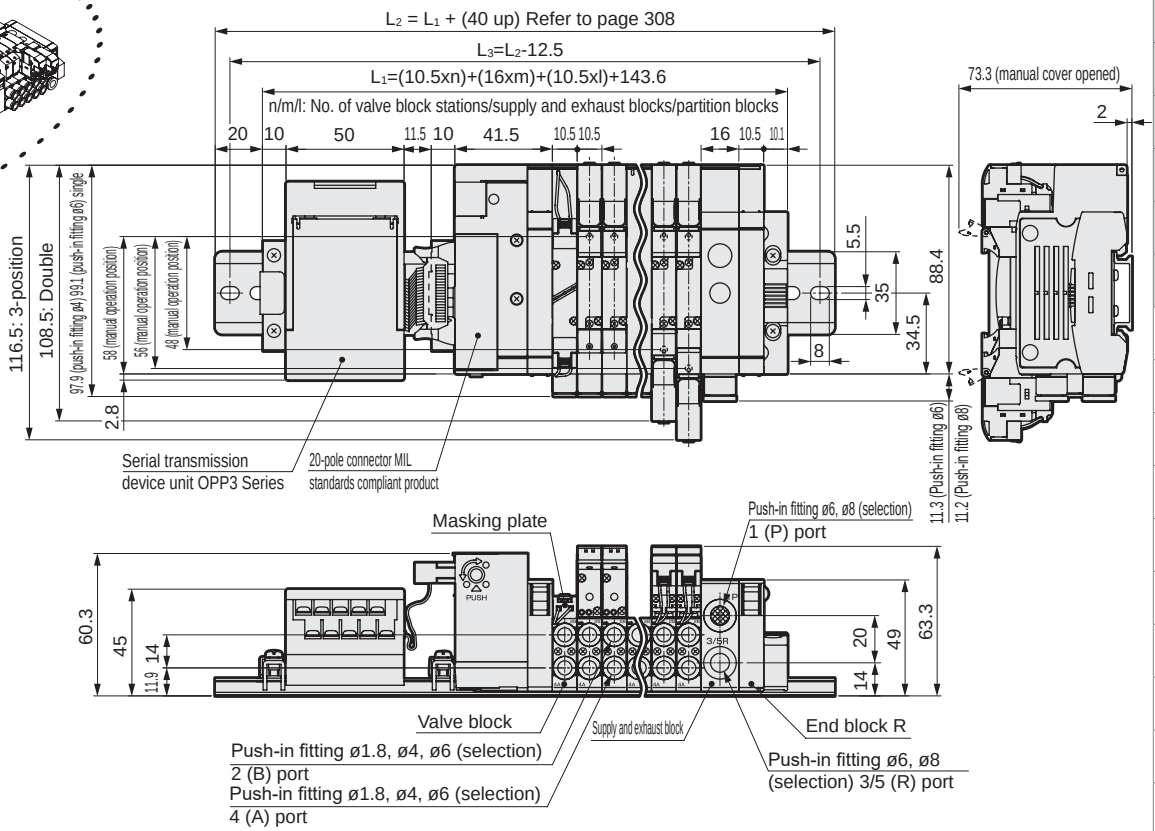

MN4GB2

Note: Refer to pages 276 and 278 for dimensions of the push-in L fitting.

● Serial transmission (T6G1)

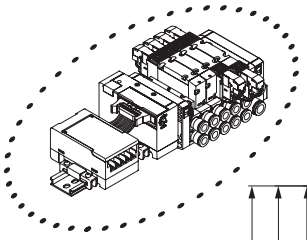

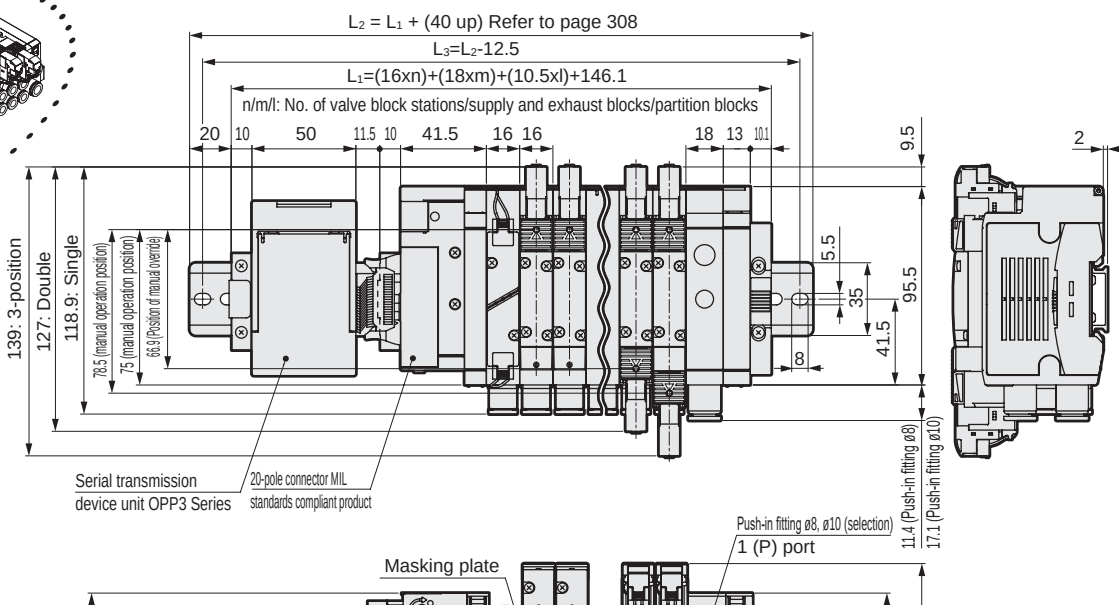

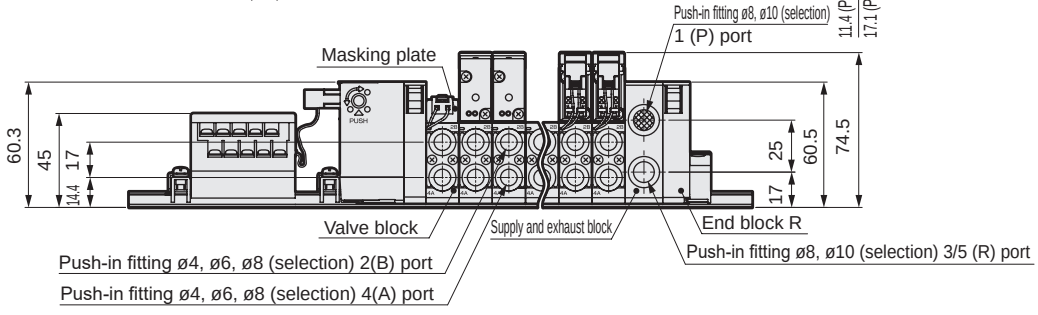

Dimensions CAD

MN4GB1

Note: The two 3-port valve integrated have the same dimensions as the double.

● Thin serial transmission (T7 □)

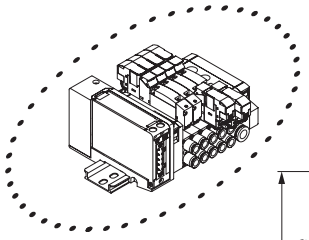

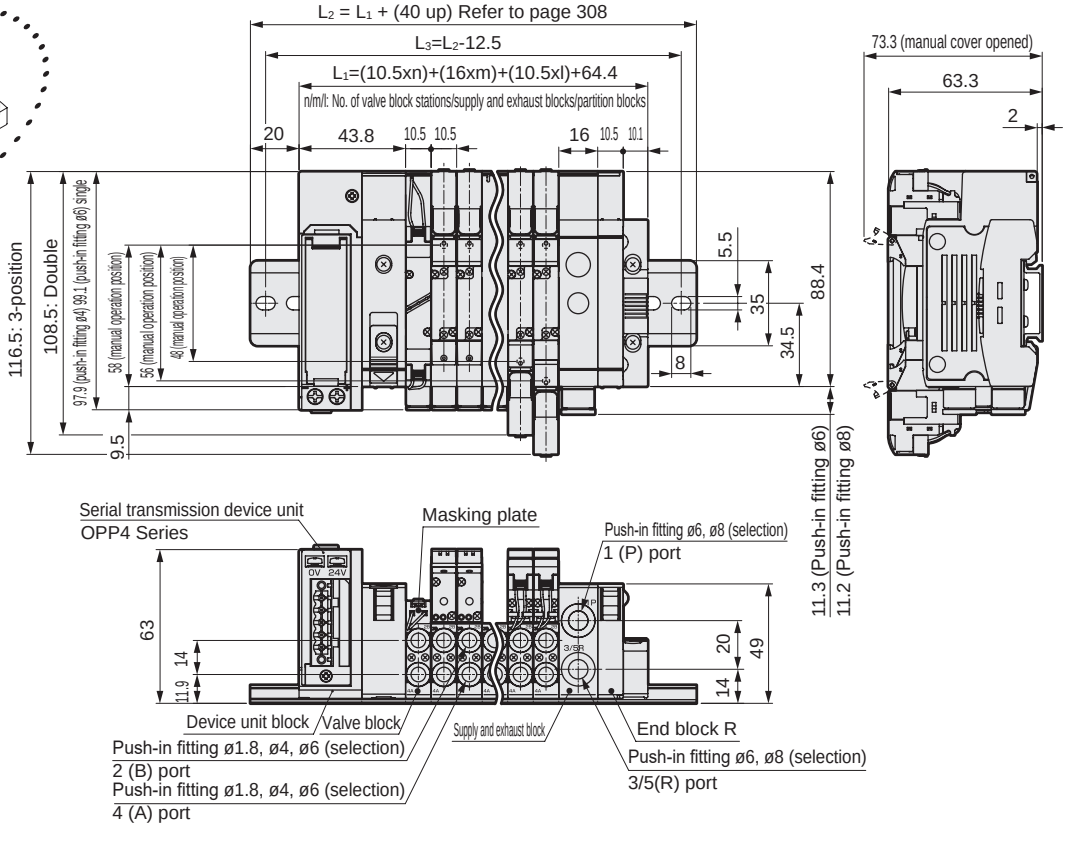

For T7S □1

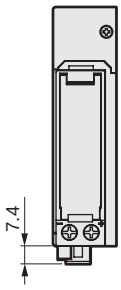

MN4GB2

Note: Refer to pages 276 and 278 for dimensions of the push-in L fitting.

● Thin serial transmission (T7 □)

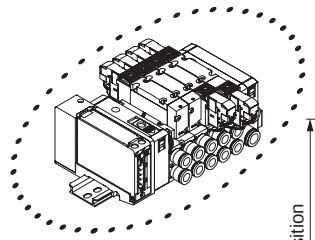

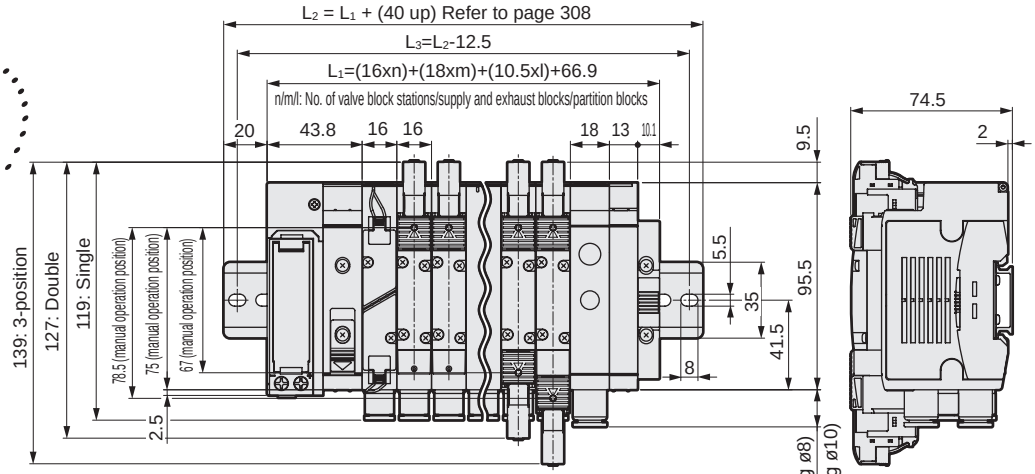

For T7S □1

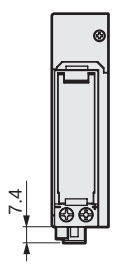

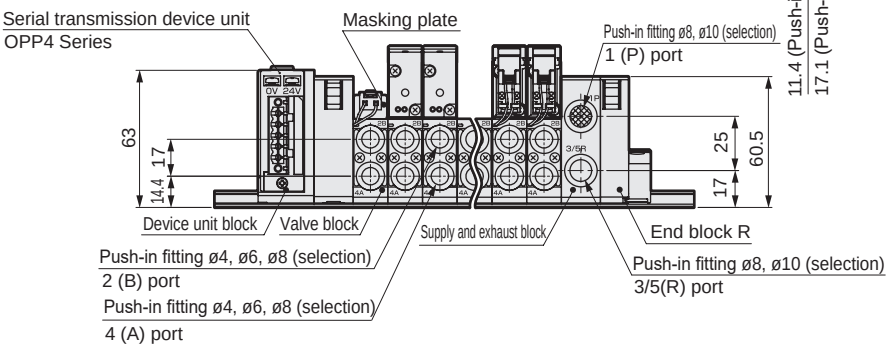

Dimensions

MN4GB1

Note: The two 3-port valve built-in type has the same dimensions as the double model.

● Thin serial transmission (T8*)

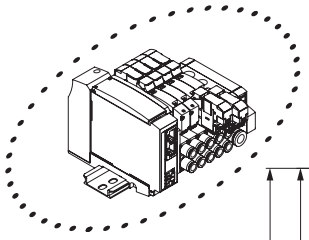

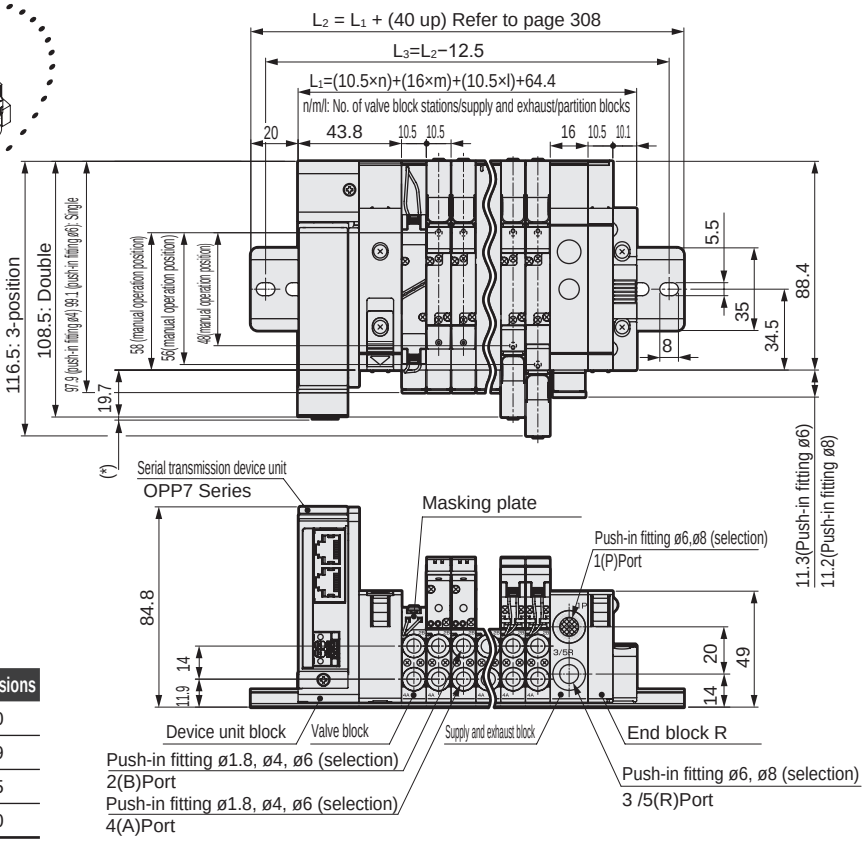

Serial transmission	* Dimensions
T8G □	1.0
T8P □	4.9
T8E □	1.5
T8D □	1.0

MN4GB2

Note: Refer to pages 276 and 278 for dimensions of the push-in L fitting.

● Thin serial transmission (T8*)

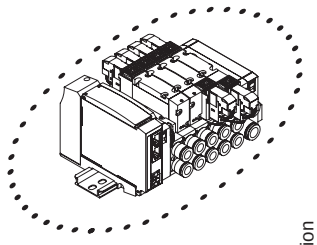

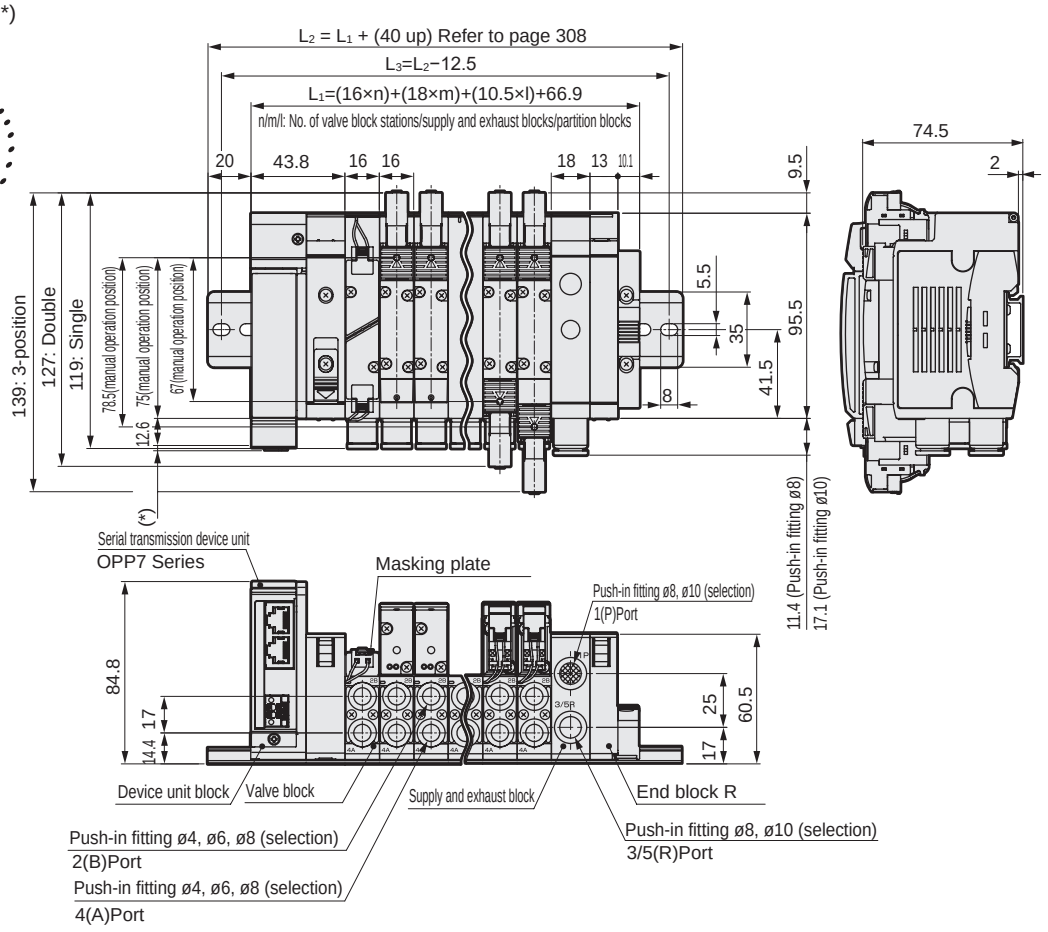

Serial transmission	* Dimensions
T8G □	1.0
T8P □	4.9
T8E □	1.5
T8D □	1.0

Dimensions

MN4GB1 Valve block

● Fitting straight

● ø1.8(CF)



● ø1.8(C18)

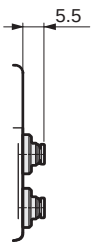

● ø4(C4)



● ø6(C6)



● When option L (with pipe adaptor) is selected, add 25.9 mm.

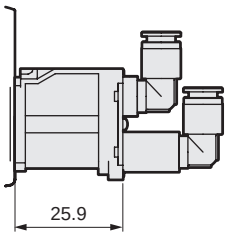

● Fitting straight, single plug

● ø1.8(CFNC)



● ø1.8(C18NC)

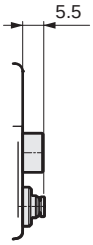

● ø4(C4NC)



● ø6(C6NC)



● ø1.8(CFNO)



● ø1.8(C18NO)

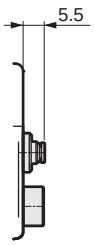

● ø4(C4NO)



● ø6(C6NO)

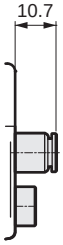

● L Fitting (upward)

● ø1.8(CL18)

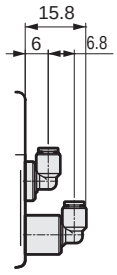

● ø4(CL4)

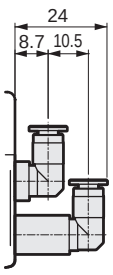

● ø6(CL6)

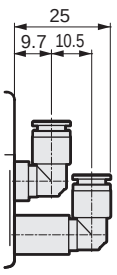

● L Fitting (downward)

● ø1.8(CD18)

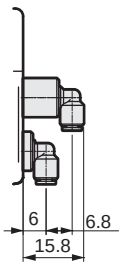

● ø4(CD4)

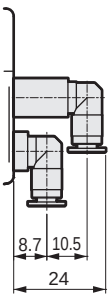

● ø6(CD6)

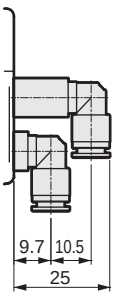

● L Fitting (upward), single plug

● ø1.8(CL18NC)

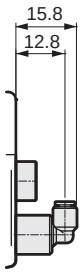

● ø4(CL4NC)

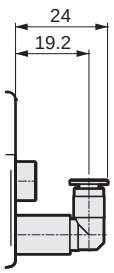

● ø6(CL6NC)

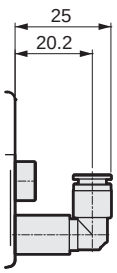

● ø1.8(CL18NO)



● ø4(CL4NO)

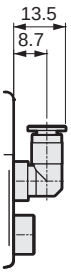

● ø6(CL6NO)

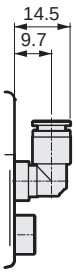

● L Fitting (downward), single plug

● ø1.8(CD18NC)



● ø4(CD4NC)



● ø6(CD6NC)



● ø1.8(CD18NO)

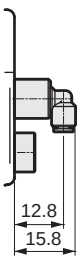

● ø4(CD4NO)

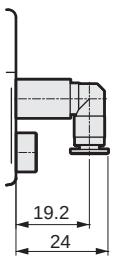

● ø6(CD6NO)

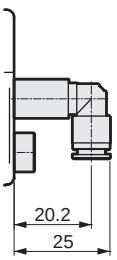

Dimensions

MN4GB1 Valve block

● Fitting straight

● ø1/8" (C3N)

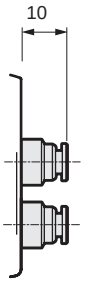

● ø5/32" (C4N)

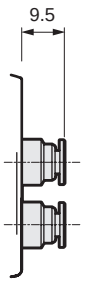

● When option L (with piping adapter) is selected, add 25.9 mm.

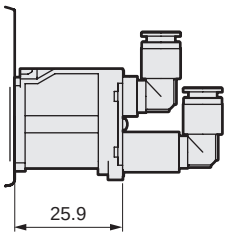

● Fitting straight, single plug

● ø1/8" (C3NCN)

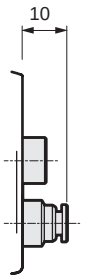

● ø5/32" (C4NCN)

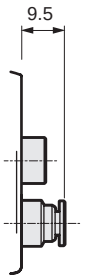

● ø1/8" (C3NON)

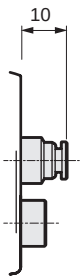

● ø5/32" (C4NON)

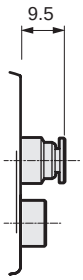

● L fitting (upward)

● ø1/8" (CL3N)

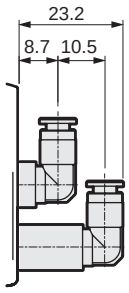

● ø5/32" (CL4N)

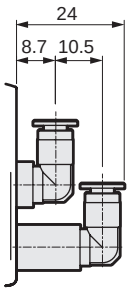

● ø1/8" (CD3N)

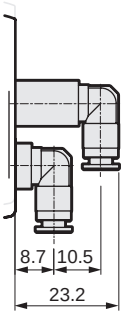

● ø5/32" (CD4N)

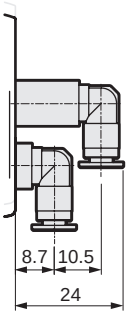

● L Fitting (upward), single plug

● ø1/8" (CL3NCN)

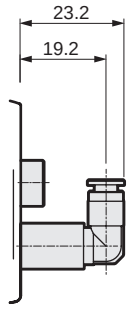

● ø5/32" (CL4NCN)

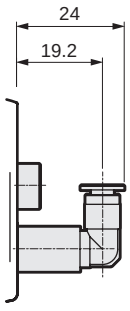

● ø1/8" (CL3NON)

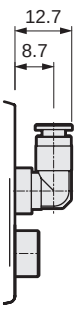

● ø5/32" (CL4NON)

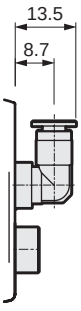

● L Fitting (downward), single plug

● ø1/8" (CD3NCN)

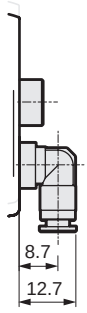

● ø5/32" (CD4NCN)

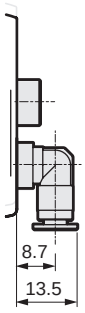

● ø1/8" (CD3NON)

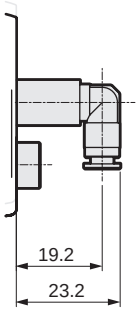

● ø5/32" (CD4NON)

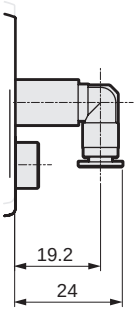

Dimensions

MN4GB2 Valve block

● Fitting straight

● ø4(C4)

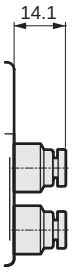

● ø6(C6)

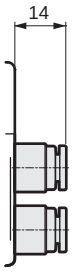

● ø8(C8)



● When option L (with piping adapter) is selected, add 24.7 mm.

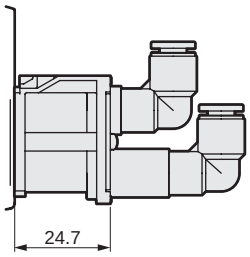

● Fitting straight, single plug

● ø4(C4NC)

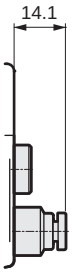

● ø6(C6NC)

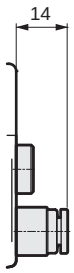

● ø8(C8NC)

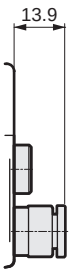

● ø4(C4NO)

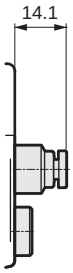

● ø6(C6NO)

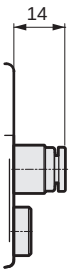

● ø8(C8NO)



● L Fitting (upward)

● ø6(CL6)

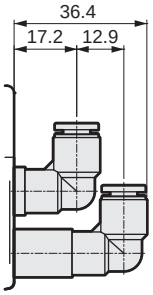

● ø8(CL8)

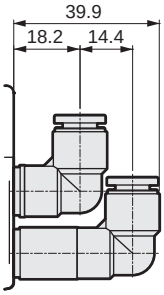

● L Fitting (downward)

● ø6(CD6)

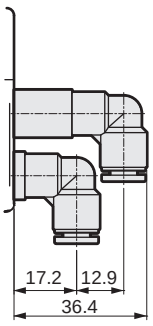

● ø8(CD8)

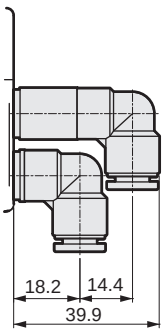

● L Fitting (upward), single plug

● ø6(CL6NC)

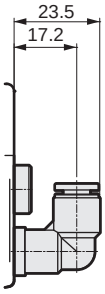

● ø8(CL8NC)

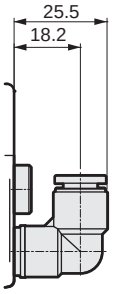

● ø6(CL6NO)

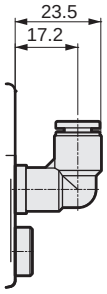

● ø8(CL8NO)

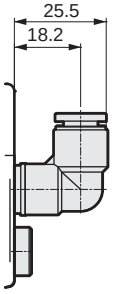

● L Fitting (downward), single plug

● ø6(CD6NC)

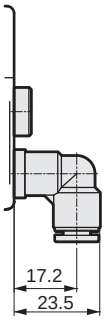

● ø8(CD8NC)

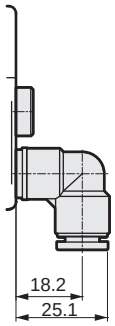

● ø6(CD6NO)

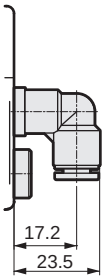

● ø8(CD8NO)

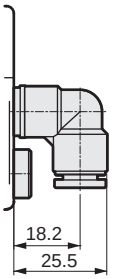

Dimensions

MN4GB2 Valve block

● Fitting straight

● ø1/4" (C6N)

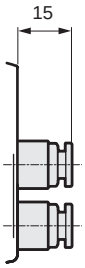

● ø5/16" (C8N)

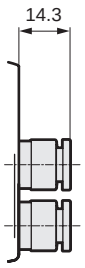

● When option L (with piping adapter) is selected, add 24.7 mm.

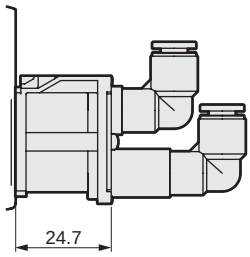

● Fitting straight, single plug

● ø1/4" (C6NNC)

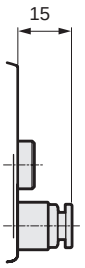

● ø5/16" (C8NNC)

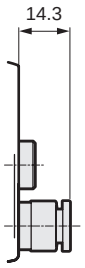

● ø1/4" (C6NON)

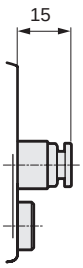

● ø5/16" (C8NON)

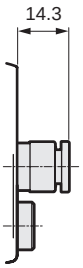

● L Fitting (upward)

● ø1/4" (CL6N)

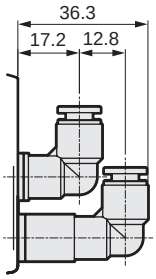

● ø5/16" (CL8N)

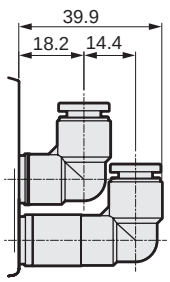

● L Fitting (downward)

● ø1/8" (CD6N)

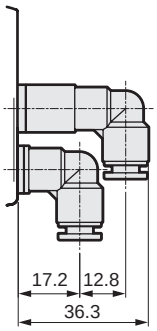

● ø5/32" (CD8N)

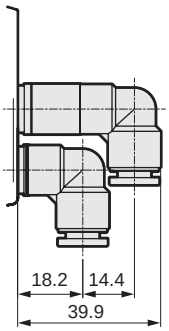

● L Fitting (upward), single plug

● ø1/4" (CL6NNC)

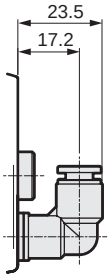

● ø5/16" (CL8NNC)

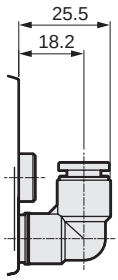

● ø1/4" (CL6NON)

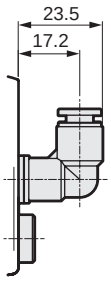

● ø5/16" (CL8NON)

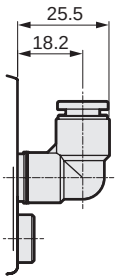

● L Fitting (downward), single plug

● ø1/4" (CD6NNC)

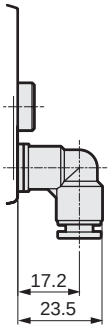

● ø5/16" (CD8NNC)

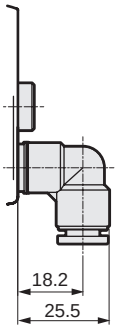

● ø1/4" (CD6NON)

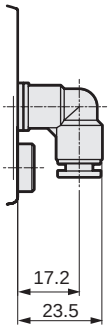

● ø5/16" (CD8NON)

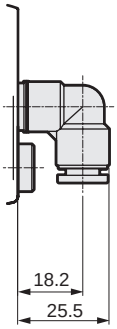

Internal structure and parts list

N3GA110R/N3GA210R

● 2-position single: Normally closed
Grommet lead wire (blank)

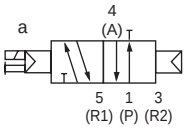

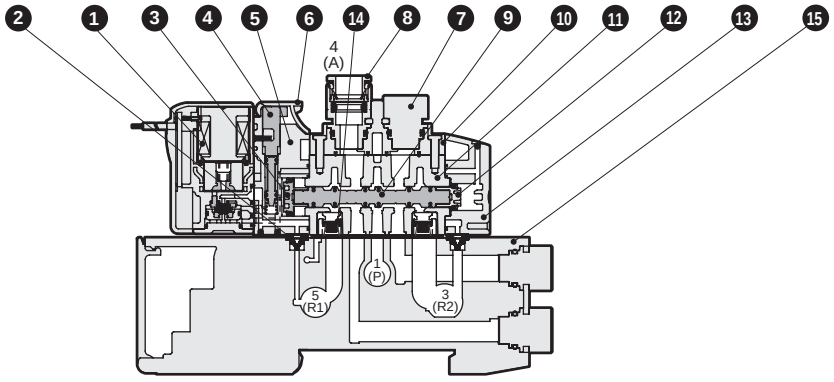

N3GA1110R/N3GA2110R

● 2-position single: Normally open
Grommet lead wire (blank)

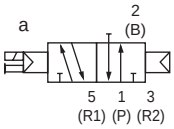

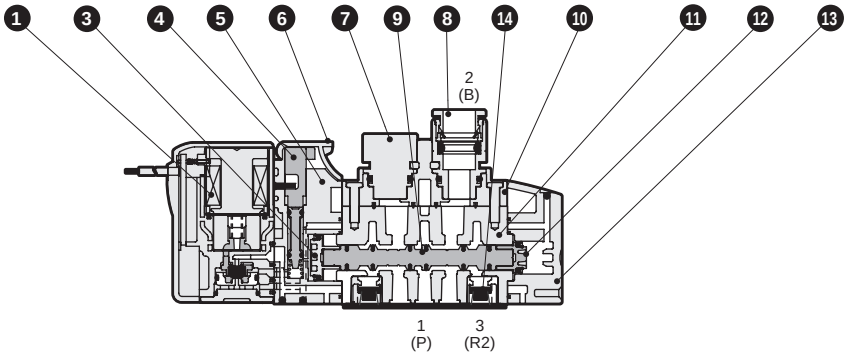

N3GA1660R/N3GA2660R

● Two 3-port valves integrated A side valve: Normally closed, B side valve: Normally closed
Grommet lead wire (blank)

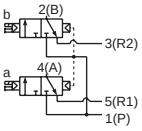

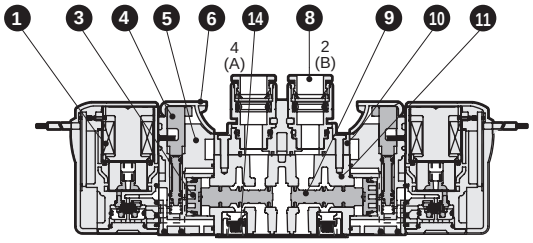

Main parts list

No.	Part name	Material
1	Coil assembly	-
2	Pilot exhaust check valve	Hydrogenated nitrile rubber
3	Piston D assembly	-
4	Manual override	Resin
5	Piston chamber	Resin
6	Manual protection cover	Resin
7	Plug cartridge	Aluminum
8	Cartridge push-in fitting	-
9	Spool assembly	-
10	Fitting adapter	Resin
11	Body	Aluminum alloy die-casting
12	Piston S assembly	-
13	Cap	Resin
14	Check valve	-
15	Valve block	Resin

Parts list

No.	Part name			Model No.
1	Coil assembly			4GR - electrical connections - □ - COIL - voltage Blank: Standard A: Ozone specs S: Surgeless E: Low exoergic/energy circuit K: External pilot
8	Cartridge push-in fitting and related parts	3G1 4G1	ø1.8 barbed	4G1R-JOINT-CF
			ø1.8 straight	4G1R-JOINT-C18
			ø4 straight	4G1R-JOINT-C4
			ø6 straight	4G1R-JOINT-C6
			ø1/8" straight	4G1R-JOINT-C3N
			ø5/32" straight	4G1R-JOINT-C4N
			Plug cartridge	4G1R-JOINT-CPG
		3G2 4G2	ø4 straight	4G2R-JOINT-C4
			ø6 straight	4G2R-JOINT-C6
			ø8 straight	4G2R-JOINT-C8
			ø1/4" straight	4G2R-JOINT-C6N
			ø5/16" straight	4G2R-JOINT-C8N
			Plug cartridge	4G2R-JOINT-CPG
-	E-connector socket assembly			4GR-SOCKET-ASSY- electrical connections - voltage
-	EJ type connector socket assembly			4GR - SOCKET - ASSY - electrical connections
-	DIN terminal box assembly (3GA2 only)			4GR-TERMINAL-BOX- Voltage

Internal structure and parts list

N4GA110R/N4GA210R

● 2-position single
Grommet lead wire (blank)

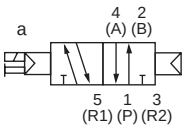

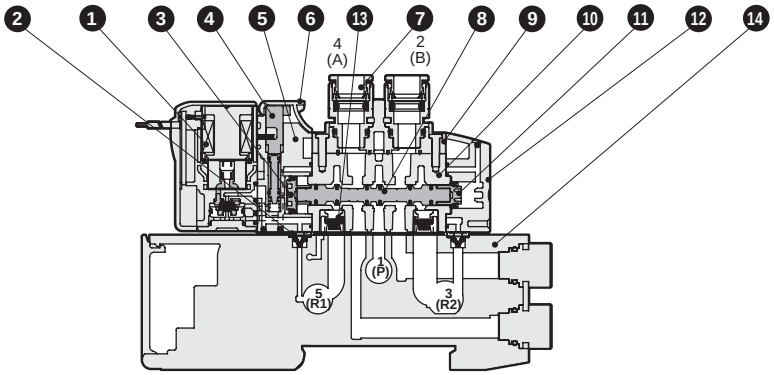

N4GA120R/N4GA220R

● 2-position double
Grommet lead wire (blank)

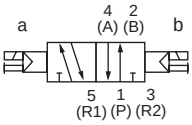

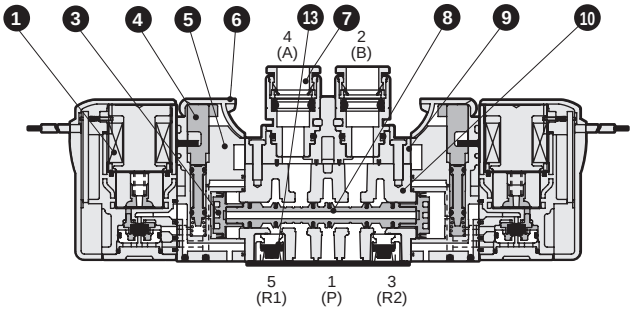

N4GA1 $^{3}_{4}_{5}$0R/N4GA2 $^{3}_{4}_{5}$0R

● 3-position
Grommet lead wire (blank)

All ports closed

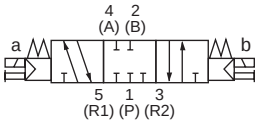

A/B/R connection

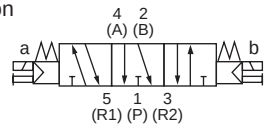

P/A/B connection

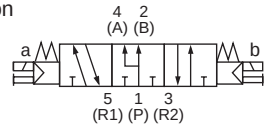

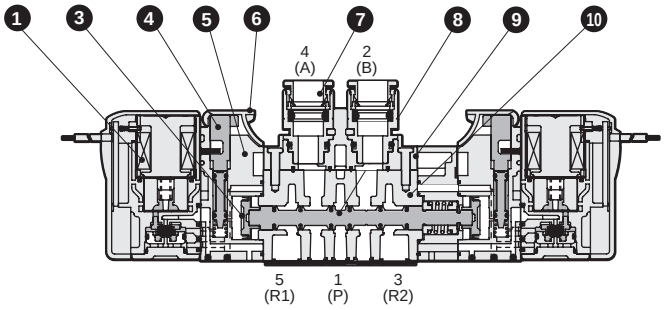

Main parts list

No.	Part name	Material
1	Coil assembly	-
2	Pilot exhaust check valve	Hydrogenated nitrile rubber
3	Piston D assembly	-
4	Manual override	Resin
5	Piston chamber	Resin
6	Manual protection cover	Resin
7	Cartridge push-in fitting	-
8	Spool assembly	-
9	Fitting adapter	Resin
10	Body	Aluminum alloy die-casting
11	Piston S assembly	-
12	Cap	Resin
13	Check valve	-
14	Valve block	Resin

Parts list

No.	Part name			Model No.
1	Coil assembly			4GR - [electrical connections] - □ - COIL - [voltage] Blank: Standard A: Ozone specs S: Surgeless E: Low exoergic/energy circuit K: External pilot
7	Cartridge push-in fitting and related parts	3G1 4G1	ø1.8 barbed	4G1R-JOINT-CF
			ø1.8 straight	4G1R-JOINT-C18
			ø4 straight	4G1R-JOINT-C4
			ø6 straight	4G1R-JOINT-C6
			ø1/8" straight	4G1R-JOINT-C3N
			ø5/32" straight	4G1R-JOINT-C4N
			Plug cartridge	4G1R-JOINT-CPG
		3G2 4G2	ø4 straight	4G2R-JOINT-C4
			ø6 straight	4G2R-JOINT-C6
			ø8 straight	4G2R-JOINT-C8
			ø1/4" straight	4G2R-JOINT-C6N
			ø5/16" straight	4G2R-JOINT-C8N
			Plug cartridge	4G2R-JOINT-CPG
-	E-connector socket assembly			4GR-SOCKET-ASSY-[electrical connections]-[voltage]
-	EJ type connector socket assembly			4GR - SOCKET - ASSY -[electrical connections]
-	DIN terminal box assembly (4GA2 only)			4GR-TERMINAL-BOX-[Voltage]

Internal structure and parts list

N3GB1660R/N3GB2660R

● Two 3-port valve integrated A side valve: Normally closed, B side valve: Normally closed
Grommet lead wire (blank) Refer to page 283.

N4GB110R/N4GB210R

● 2-position single
Grommet lead wire (blank)

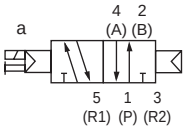

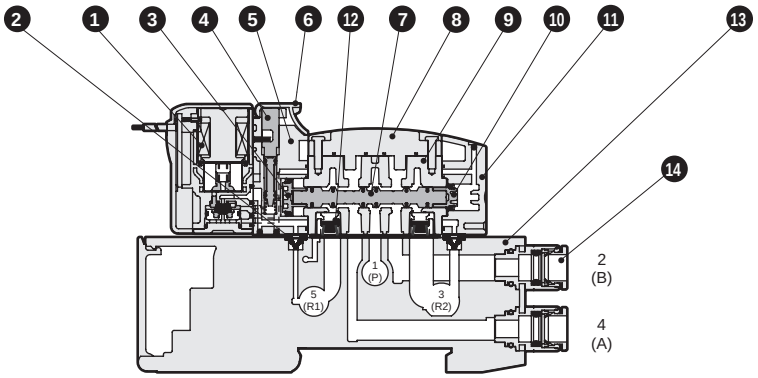

N4GB120R/N4GB220R

● 2-position double
Grommet lead wire (blank)

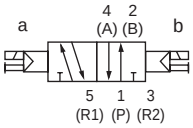

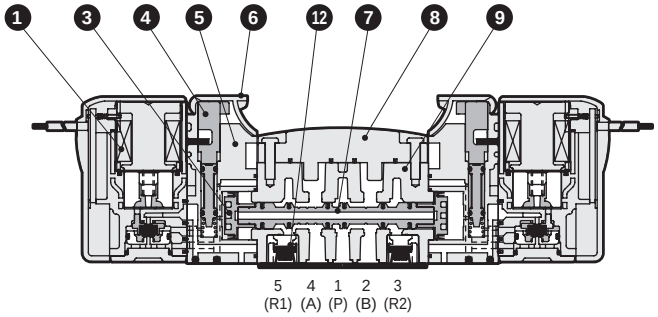

N4GB1$^{3}_{4}_{5}$0R/N4GB2$^{3}_{4}_{5}$0R

● 3-position
Grommet lead wire (blank)

All ports closed

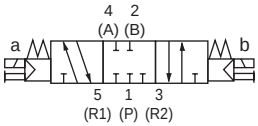

A/B/R connection

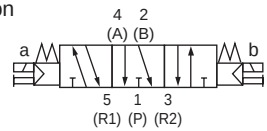

P/A/B connection

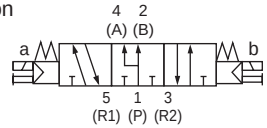

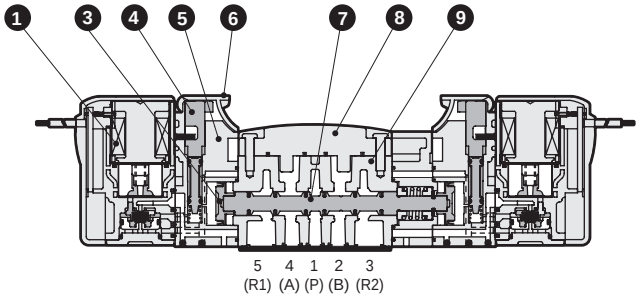

Main parts list

No.	Part name	Material
1	Coil assembly	-
2	Pilot exhaust check valve	Hydrogenated nitrile rubber
3	Piston D assembly	-
4	Manual override	Resin
5	Piston chamber	Resin
6	Manual protection cover	Resin
7	Spool assembly	-
8	Plate	Resin
9	Body	Aluminum alloy die-casting
10	Piston S assembly	-
11	Cap	Resin
12	Check valve	-
13	Valve block	Resin
14	Cartridge push-in fitting	-

Parts list

No.	Part name			Model No.
1	Coil assembly			4GR - electrical connections - □ - COIL - voltage Blank: Standard A: Ozone specs S: Surgeless E: Low exoergic/ energy circuit K: External pilot
14	Cartridge push-in fitting and related parts	3G1 4G1	ø1.8 barbed	4G1R-JOINT-CF
			ø1.8 straight	4G1R-JOINT-C18
			ø4 straight	4G1R-JOINT-C4
			ø6 straight	4G1R-JOINT-C6
			ø1/8" straight	4G1R-JOINT-C3N
			ø5/32" straight	4G1R-JOINT-C4N
			Plug cartridge	4G1R-JOINT-CPG
		3G2 4G2	ø4 straight	4G2R-JOINT-C4
			ø6 straight	4G2R-JOINT-C6
			ø8 straight	4G2R-JOINT-C8
			ø1/4" straight	4G2R-JOINT-C6N
			ø5/16" straight	4G2R-JOINT-C8N
			Plug cartridge	4G2R-JOINT-CPG
–	E-connector socket assembly			4GR-SOCKET-ASSY- electrical connections - voltage
–	EJ type connector socket assembly			4GR - SOCKET - ASSY - electrical connections
–	DIN terminal box assembly (4GB2 only)			4GR-TERMINAL-BOX- Voltage

Internal structure and parts list

N3GB1660R/N3GB2660R

● Two 3-port valve integrated A side valve: Normally closed, B side valve: Normally closed
Grommet lead wire (blank)

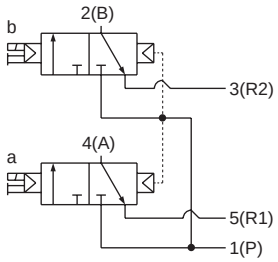

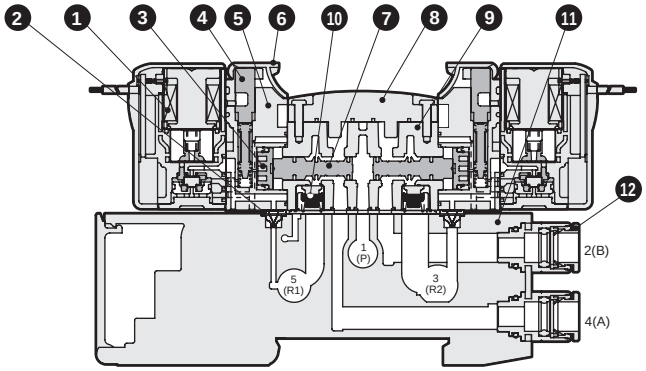

Main parts list

No.	Part name	Material
1	Coil assembly	-
2	Pilot exhaust check valve	Hydrogenated nitrile rubber
3	Piston assembly	-
4	Manual override	Resin
5	Piston chamber	Resin
6	Manual protection cover	Resin
7	Spool assembly	-
8	Plate	Resin
9	Body	Aluminum alloy die-casting
10	Check valve	-
11	Valve block	Resin
12	Cartridge push-in fitting	-

Parts list

No.	Part name			Model No.
1	Coil assembly			4GR - electrical connections - □ - COIL - voltage Blank: Standard A: Ozone specs S: Surgeless E: Low exoergic/ energy circuit K: External pilot
12	Cartridge push-in fitting and related parts	3G1 4G1	ø1.8 barbed	4G1R-JOINT-CF
			ø1.8 straight	4G1R-JOINT-C18
			ø4 straight	4G1R-JOINT-C4
			ø6 straight	4G1R-JOINT-C6
			ø1/8" straight	4G1R-JOINT-C3N
			ø5/32" straight	4G1R-JOINT-C4N
			Plug cartridge	4G1R-JOINT-CPG
		3G2 4G2	ø4 straight	4G2R-JOINT-C4
			ø6 straight	4G2R-JOINT-C6
			ø8 straight	4G2R-JOINT-C8
			ø1/4" straight	4G2R-JOINT-C6N
			ø5/16" straight	4G2R-JOINT-C8N
			Plug cartridge	4G2R-JOINT-CPG
–	E-connector socket assembly			4GR-SOCKET-ASSY- electrical connections - voltage
–	EJ type connector socket assembly			4GR - SOCKET - ASSY - electrical connections
–	DIN terminal box assembly (3GB2 only)			4GR-TERMINAL-BOX- Voltage

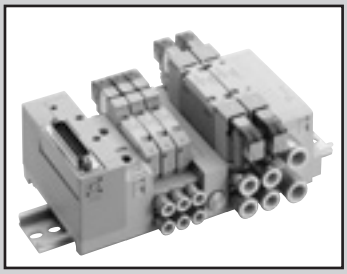

4G1/2 mix manifold

MN3GAX12,MN4GAX12 MN4GBX12 Series

● Cylinder bore size: ø20 to ø80

RoHS CAD

Specifications

Common with all series.

For individual wiring, refer to page 230 (body piping) or page 238 (base piping), and for reduced wiring, refer to page 246 (body piping) or page 262 (base piping).

How to order

MN3G$^{A}_{B}$X12R - ○ - ○ ○ ○ - ○ - ○

MN4G$^{A}_{B}$X12R - ○ - ○ ○ ○ - ○ - ○

Ⓐ Model No. Ⓑ Port size Ⓒ Electrical connections (Reduced wiring connection) Ⓓ Terminal/connector pin array Ⓔ Option Ⓕ Station No. Ⓖ Voltage

* The model No. will be "MN □ G □ X12R-". Other items are common with the example of model No. for each series.
For individual wiring, refer to page 232 (body piping) or page 240 (base piping), and for reduced wiring, refer to page 248 (body piping) or page 264 (base piping).

Manifold components explanation and parts list

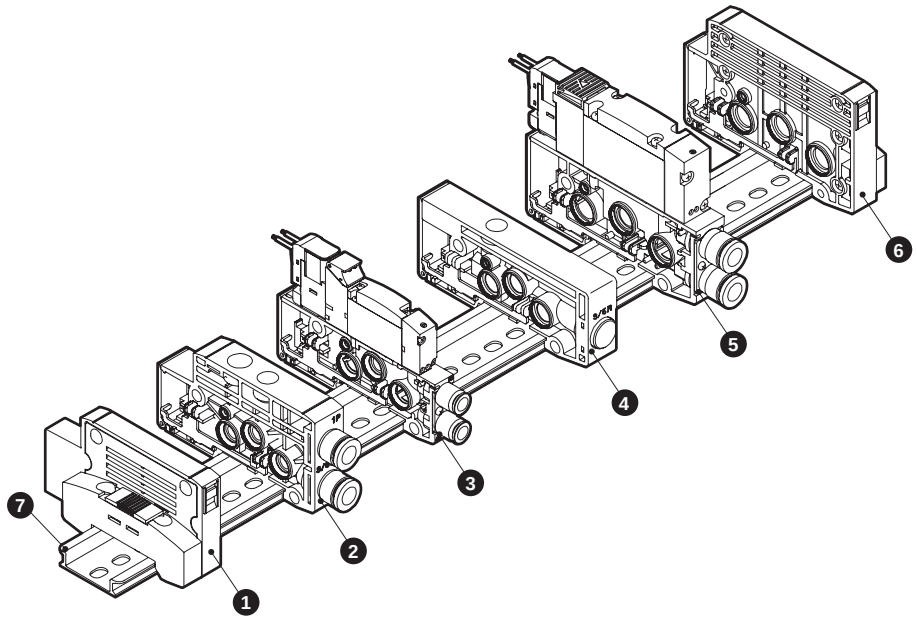

* Notes on 4G1/2 mix manifolds
With the fitting at the front, the left side of the mixed block is the 4G1 series and the right side the 4G2 series.
(Note that these position settings cannot be reversed.)

List of main components (refer to pages 286 to 305 for details)

No.	Component name	Model No. (example)
1	End block L	N4G1R-EL
2	Supply and exhaust block	N4G1R-Q-8
3	Discrete valve block with solenoid valve	N4GB110R-C6-H-3
4	Mixed block	N4G12R-MIX
5	Discrete valve block with solenoid valve	N4GB210R-C8-H-3
6	End block R	N4G2R-ER
7	DIN rail	N4GR-BAA (Length)

Weight

N4G12R-MIX: 49 g

Refer to the specifications of each series for other components.

Mixed block: Dimensions

Unit mm

MN4GBX12R

Note: For details of the E-connector, EJ type connector, and DIN terminal box, refer to pages for each model (MN4GA: page 235 on, MN4GB: page 243 on).
Note: Refer to pages 276 to 279 for details of the push-in L fitting.

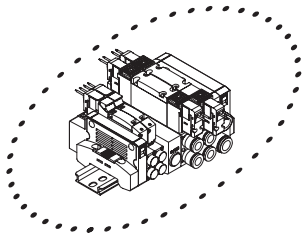

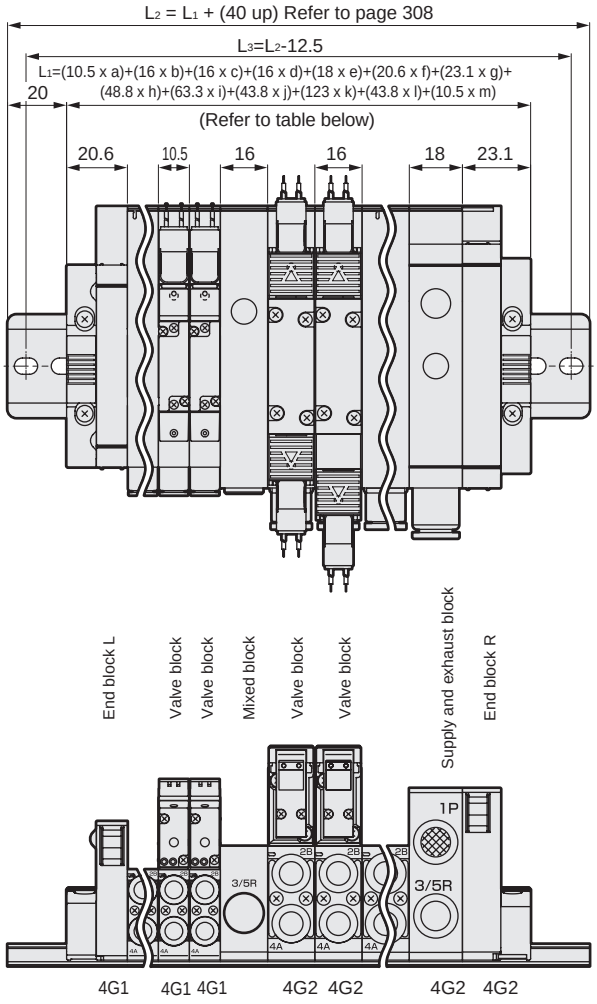

This diagram is one example of the many free combinations available for the mix manifold. With the dimensions listed below, configure combinations with reference to the previous page.

Part name	Dimensions
a : 4G1 number of valve blocks	10.5xa
b : 4G2 number of valve blocks	16xb
c : number of mix blocks	16xc
d : 4G1 number of supply and exhaust blocks	16xd
e : 4G2 number of supply and exhaust blocks	18xe
f : 4G1 number of L end blocks	20.6xf
g : 4G2 number of R end blocks	23.1xg
h : 4G1/2 number of reduced wiring T30/T5*	48.8xh
i : 4G1/2 number of reduced wiring T10/T11*	63.3xi
j : 4G1/2 number of reduced wiring T7*	43.8xj
k : 4G1/2 number of reduced wiring T6G1	123xK
l : 4G1/2 number of reduced wiring T8*	43.8xl
m : 4G1/2 number of partition blocks	10.5xm

*1: The mixed block must be placed between 4G1 and 4G2.
*2: The max. station No. is 20.

Block manifold: Block configuration

As units can be freely assembled, it is easy to change the number of stations, perform maintenance, etc.

● Valve block with solenoid valve

(1) The types of solenoid valve required can be arranged on a DIN rail at the number of stations required.
However, the max. number of stations depends on the wiring method. (Refer to pages 246 and 262.)
(2) Solenoid valves are numbered 1, 2, 3... from the left with the fitting in front.

● Supply and exhaust block

(1) At the connecting part of each block, a number of blocks can be freely connected.
(2) Select internal or external pilot according to the solenoid valve.

● End block

(1) Install on both sides for individual wiring specifications.
(2) Install only on wiring block opposite side for reduced wiring specifications.

● Partition block

(1) Install in combination with supply and exhaust blocks for multi-pressure specifications.

● Mixed block

(1) Install when combining 4G1 and 4G2 as a mix on the same DIN rail. This will have the effect of reduced piping.
Note: 4G1 on the left side of the mixed block and 4G2 on the right side.

Block manifold configuration

Piping

Wiring

Related products

Piping block

A Discrete valve block with solenoid valve

- For body piping individual wiring
- For body piping reduced wiring
- For base piping individual wiring
- For base piping reduced wiring

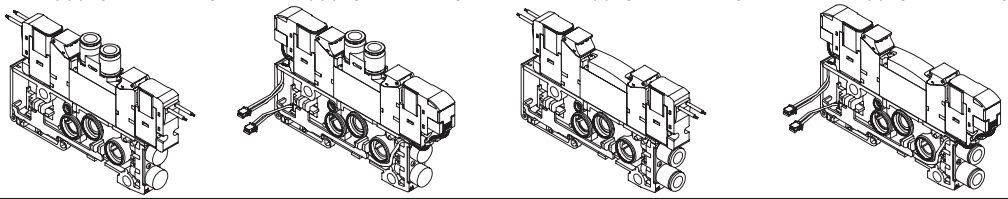

B Discrete valve block with masking plate

- For body piping
- For base piping

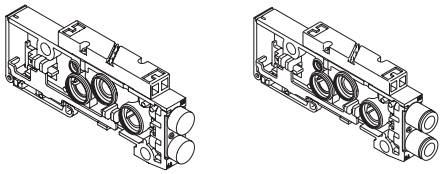

C Discrete valve block

- For body piping
- For base piping

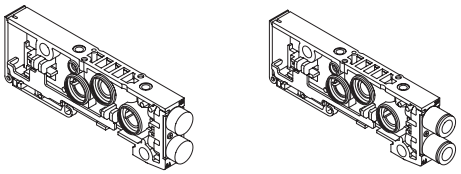

D Supply and exhaust block

- For internal pilot
- For external pilot

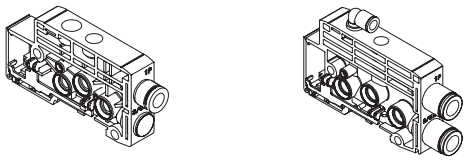

E End block

- For left
- For right

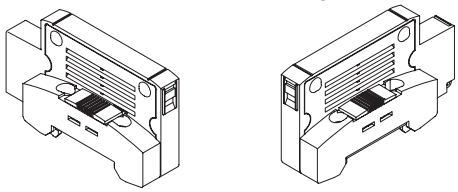

F Partition block

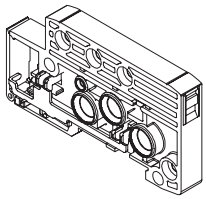

G Mixed block

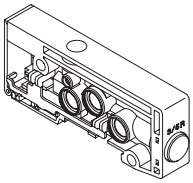

Wiring block

H Common terminal box

- M3
- Clamping method

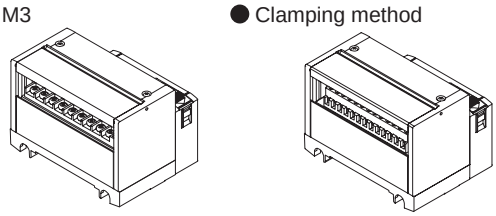

I D sub-connector block

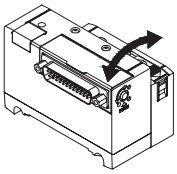

J Flat cable connector block

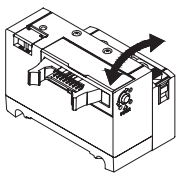

K Serial transmission block

- Connector connection
- Thin slot

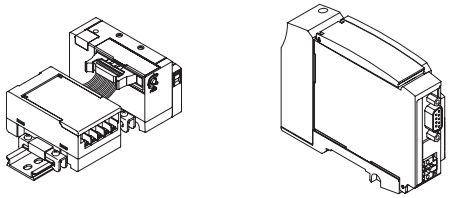

Related products

L Related products

- Mounting rail

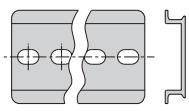

- Blanking plug

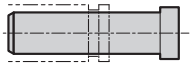

- Tag plate

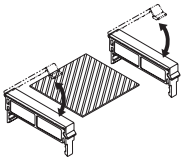

- Silencer

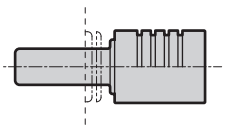

- Air supply spacer



- Spacer pilot check valve

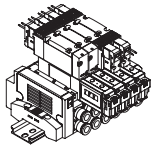

- In-stop valve spacer

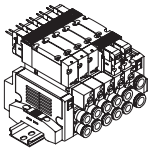

- Pilot check valve

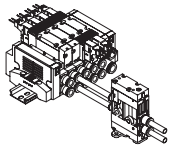

Piping

A. Discrete valve block with solenoid valve

Block assembled from solenoid valve body and valve block (split resin base). For model selection, refer to the following pages.
Body piping individual wiring: page 232, base piping individual wiring: page 240, body piping reduced wiring: page 248,
base piping reduced wiring: page 264

B. Discrete valve block with masking plate

Block assembled from masking plate and valve block (split resin base).

N4GA1 R - MP ——— 3

N4GB1 R - MPD - C4 - 3 F

Ⓐ Model No. Ⓑ Type Ⓒ Bore size Ⓓ Cable length *2 Ⓔ Option

Ⓑ Type

MP	For individual wiring
MPS	For reduced wiring single
MPD	For reduced wiring double/3-position

Ⓓ Cable length *3

Blank	For individual wiring
2 to 10	Select the length from page 290.

Ⓔ Option

Blank	No option
L	With piping adapter
F	A/B-port filter built in

*2: A socket assembly is attached with purchases for reduced wiring station expansion, so select “2 to 10”. Select a cable length from page 290 and fill in the Ⓓ cable length field. If ordering with the manifold specifications sheet, the cable length can be omitted.

Code	Description	Ⓐ Model No. N4GA1	N4GA2	N4GB1	N4GB2
Ⓒ Port size (for base piping, this must be configured.)					
Type	Metric fitting/Rc thread				
CF	ø1.8 barbed fitting (compatible tube UP-9102-**)			●	
C18	ø1.8 push-in fitting (compatible tube UP-9402-**)			●	
C4	ø4 push-in fitting			●	●
C6	ø6 push-in fitting			●	●
C8	ø8 push-in fitting				●
CL18	ø1.8 push-in L-fitting upward (compatible tube UP-9402-**)			●	
CL4	ø4 push-in L-fitting (upward)			●	
CL6	ø6 push-in L-fitting (upward)			●	●
CL8	ø8 push-in L-fitting (upward)				●
CD18	ø1.8 push-in L-fitting downward (compatible tube UP-9402-**)			●	
CD4	ø4 push-in L-fitting (downward)			●	
CD6	ø6 push-in L-fitting (downward)			●	●
CD8	ø8 push-in L-fitting (downward)				●
Single, plug specs	A port / B port				
CFNC	ø1.8 barbed fitting (compatible tube UP-9102-**) / Plug			●	
C18NC	ø1.8 push-in fitting (compatible tube UP-9402-**) / Plug			●	
C4NC	ø4 push-in fitting / Plug			●	●
C6NC	ø6 push-in fitting / Plug			●	●
C8NC	ø8 push-in fitting / Plug				●
CFNO	Plug / ø1.8 barbed fitting (compatible tube UP-9102-**)			●	
C18NO	Plug / ø1.8 push-in fitting (compatible tube UP-9402-**)			●	
C4NO	Plug / ø4 push-in fitting			●	●
C6NO	Plug / ø6 push-in fitting			●	●
C8NO	Plug / ø8 push-in fitting				●
CL18NC	ø1.8 push-in L-fitting upward (compatible tube UP-9402-**) / Plug			●	
CL4NC	ø4 push-in L-fitting (upward) / Plug			●	●
CL6NC	ø6 push-in L-fitting (upward) / Plug			●	●
CL8NC	ø8 push-in L-fitting (upward) / Plug				●
CL18NO	Plug / ø1.8 push-in L-fitting upward (compatible tube UP-9402-**)			●	
CL4NO	Plug / ø4 push-in L-fitting (upward)			●	
CL6NO	Plug / ø6 push-in L-fitting (upward)			●	●
CL8NO	Plug / ø8 push-in L-fitting (upward)				●

Code	Description	Ⓐ Model No. N4GA1	N4GA2	N4GB1	N4GB2
Type	Metric fitting/Rc thread				
Single, plug specs	A port / B port				
CD18NC	ø1.8 push-in L-fitting downward (compatible tube UP-9402-**) / Plug			●	
CD4NC	ø4 push-in L-fitting (downward) / Plug			●	
CD6NC	ø6 push-in L-fitting (downward) / Plug			●	●
CD8NC	ø8 push-in L-fitting (downward) / Plug				●
CD18NO	Plug / ø1.8 push-in L-fitting downward (compatible tube UP-9402-**)			●	
CD4NO	Plug / ø4 push-in L-fitting (downward)			●	
CD6NO	Plug / ø6 push-in L-fitting (downward)			●	●
CD8NO	Plug / ø8 push-in L-fitting (downward)				●
Type	Inch fitting/inch thread				
C3N	ø1/8” push-in fitting			●	
C4N	ø5/32” push-in fitting			●	
C6N	ø1/4” push-in fitting				●
C8N	ø5/16” push-in fitting				●
CL3N	ø1/8” push-in L-fitting (upward) *1			○	
CL4N	ø5/32” push-in L-fitting (upward) *1			○	
CL6N	ø1/4” push-in L-fitting (upward) *1				○
CL8N	ø5/16” push-in L-fitting (upward) *1				○
Single, plug specs	A port / B port				
C3NCN	ø1/8” push-in fitting / Plug			●	
C4NCN	ø5/32” push-in fitting / Plug			●	
C6NCN	ø1/4” push-in fitting / Plug				●
C8NCN	ø5/16” push-in fitting / Plug				●
C3NON	Plug / ø1/8” push-in fitting			●	
C4NON	Plug / ø5/32” push-in fitting			●	
C6NON	Plug / ø1/4” push-in fitting				●
C8NON	Plug / ø5/16” push-in fitting				●
CL3NCN	ø1/8” push-in L-fitting upward *1 / Plug			○	
CL4NCN	ø5/32” push-in L-fitting upward *1 / Plug			○	
CL6NCN	ø1/4” push-in L-fitting upward *1 / Plug				○
CL8NCN	ø5/16” push-in L-fitting upward *1 / Plug				○
CL3NON	Plug / ø1/8” push-in L-fitting upward *1			○	
CL4NON	Plug / ø5/32” push-in L-fitting upward *1			○	
CL6NON	Plug / ø1/4” push-in L-fitting upward *1				○
CL8NON	Plug / ø5/16” push-in L-fitting upward *1				○

*1: Available as custom order.

is not available.
○ indicates a custom order.

N4GA1R-MP

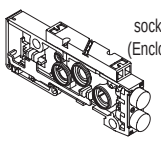

N4GB1R-MPD-C4-3

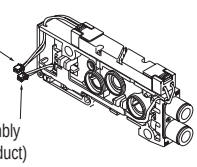

N4GB1R-MPD-C4-3L

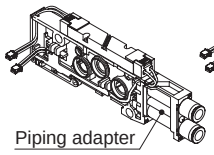

N4GB1R-MPD-CL4-3L

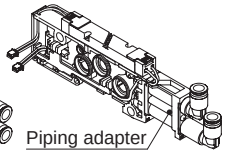

N4GA2R-MP

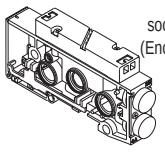

N4GB2R-MPD-C6-5

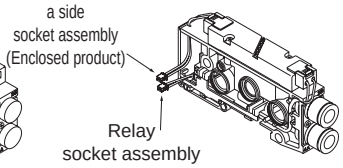

B-1. Masking plate

4G1R - MP

Ⓐ Model No.

4G1R-MP

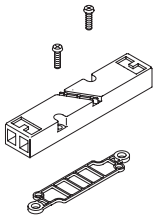

4G2R-MP

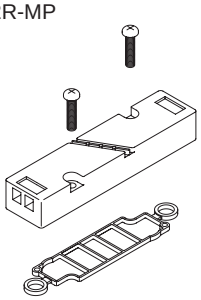

Piping

C. Discrete valve block (separate item only)

Discrete valve block (split resin base).

N4GA1 R - V1 ——— 3
N4GB1 R - V2 - C4 - 3 F

A Model No. / B Type / C Bore size / D Cable length *2 / E Option

B Type

V1	For individual wiring For reduced wiring single
V2	Reduced wiring double/3 For position

D Cable length *3

Blank	For individual wiring
2 to 10	Select the length from page 290.

*2: A socket assembly is attached with purchases for reduced wiring station expansion, so select "2 to 10". Select a cable length from page 290 and fill in the D cable length field. If ordering with the manifold specifications sheet, the cable length can be omitted.

Code	Description	A Model No. N4GA1	N4GA2	N4GB1	N4GB2
C Port size (for base piping, this must be configured.)					
Type	Metric fitting/RcThread				
CF	ø1.8 barbed fitting (compatible tube UP-9102-**)			●	
C18	ø1.8 push-in fitting (compatible tube UP-9402-**)			●	
C4	ø4 push-in fitting			●	●
C6	ø6 push-in fitting			●	●
C8	ø8 push-in fitting				●
CL18	ø1.8 push-in L-fitting upward (compatible tube UP-9402-**)			●	
CL4	ø4 push-in L-fitting (upward)			●	
CL6	ø6 push-in L-fitting (upward)			●	●
CL8	ø8 push-in L-fitting (upward)				●
CD18	ø1.8 push-in L-fitting downward (compatible tube UP-9402-**)			●	
CD4	ø4 push-in L-fitting (downward)			●	
CD6	ø6 push-in L-fitting (downward)			●	●
CD8	ø8 push-in L-fitting (downward)				●
Single, plug specs	A Port / B Port				
CFNC	ø1.8 barbed fitting (compatible tube UP-9102-**) / Plug			●	
C18NC	ø1.8 push-in fitting (compatible tube UP-9402-**) / Plug			●	
C4NC	ø4 push-in fitting / Plug			●	●
C6NC	ø6 push-in fitting / Plug			●	●
C8NC	ø8 push-in fitting / Plug				●
CFNO	Plug / ø1.8Barbed fitting (Compatible tube UP-9102-**)			●	
C18NO	Plug / ø1.8Push-in fitting (Compatible tube UP-9402-**)			●	
C4NO	Plug / ø4Push-in fitting			●	●
C6NO	Plug / ø6Push-in fitting			●	●
C8NO	Plug / ø8Push-in fitting				●
CL18NC	ø1.8 push-in L-fitting upward (compatible tube UP-9402-**) / Plug			●	
CL4NC	ø4 push-in L-fitting (upward) / Plug			●	●
CL6NC	ø6 push-in L-fitting (upward) / Plug			●	●
CL8NC	ø8 push-in L-fitting (upward) / Plug				●
CL18NO	Plug / ø1.8 push-in L-fitting upward (compatible tube UP-9402-**)			●	
CL4NO	Plug / ø4 push-in L-fitting (upward)			●	
CL6NO	Plug / ø6 push-in L-fitting (upward)			●	●
CL8NO	Plug / ø8 push-in L-fitting (upward)				●

Code	Description	A Model No. N4GA1	N4GA2	N4GB1	N4GB2
Type	Metric fitting/RcThread				
Single, plug specs	A Port / B Port				
CD18NC	ø1.8 push-in L-fitting downward (compatible tube UP-9402-**) / Plug			●	
CD4NC	ø4 push-in L-fitting (downward) / Plug			●	
CD6NC	ø6 push-in L-fitting (downward) / Plug			●	●
CD8NC	ø8 push-in L-fitting (downward) / Plug				●
CD18NO	Plug / ø1.8 push-in L-fitting downward (compatible tube UP-9402-**)			●	
CD4NO	Plug / ø4 push-in L-fitting (downward)			●	
CD6NO	Plug / ø6 push-in L-fitting (downward)			●	●
CD8NO	Plug / ø8 push-in L-fitting (downward)				●
Type	Inch fitting/inch thread				
C3N	ø1/8" push-in fitting			●	
C4N	ø5/32" push-in fitting			●	
C6N	ø1/4" push-in fitting				●
C8N	ø5/16" push-in fitting				●
CL3N	ø1/8" push-in L-fitting (upward) *1			○	
CL4N	ø5/32" push-in L-fitting (upward) *1			○	
CL6N	ø1/4" push-in L-fitting (upward) *1				○
CL8N	ø5/16" push-in L-fitting (upward) *1				○
Single, plug specs	A Port / B Port				
C3NCN	ø1/8" push-in fitting / Plug			●	
C4NCN	ø5/32" push-in fitting / Plug			●	
C6NCN	ø1/4" push-in fitting / Plug				●
C8NCN	ø5/16" push-in fitting / Plug				●
C3NON	Plug / ø1/8" push-in fitting			●	
C4NON	Plug / ø5/32" push-in fitting			●	
C6NON	Plug / ø1/4" push-in fitting				●
C8NON	Plug / ø5/16" push-in fitting				●
CL3NCN	ø1/8" push-in L-fitting upward *1 / Plug			○	
CL4NCN	ø5/32" push-in L-fitting upward *1 / Plug			○	
CL6NCN	ø1/4" push-in L-fitting upward *1 / Plug				○
CL8NCN	ø5/16" push-in L-fitting upward *1 / Plug				○
CL3NON	Plug / ø1/8" push-in L-fitting upward *1			○	
CL4NON	Plug / ø5/32" push-in L-fitting upward *1			○	
CL6NON	Plug / ø1/4" push-in L-fitting upward *1				○
CL8NON	Plug / ø5/16" push-in L-fitting upward *1				○

E Option

Blank	No option	●	●	●	●
L	With piping adapter			●	●
F	Port A/B filter built in			●	●
Z6	For spacer pilot check valve mounting			●	●

*1: Available as made to order.

is not available.
○ indicates made to order.

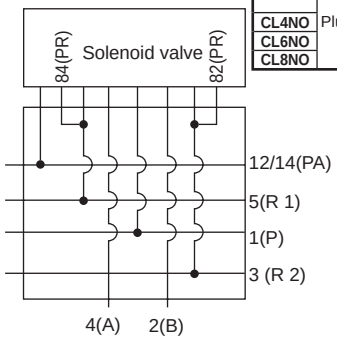

Discrete valve block circuit diagram

N4GA1R-V1

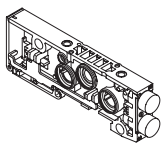

N4GB1R-V2-C4

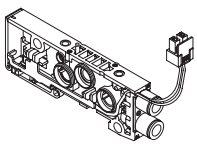

N4GA2R-V1

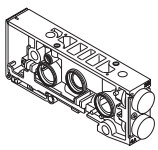

N4GB2R-V2-C6

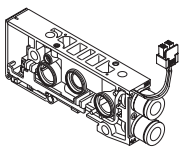

Option L piping adapter

When using radial upward push-in fittings with double or 3-position types, select L (with piping adapter).
In addition, combining axial push-in fittings with piping adapters may cause the fitting to protrude past the socket assembly, making tube attachment and removal easier.

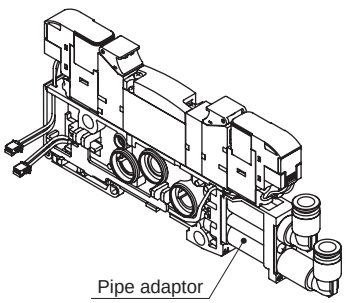

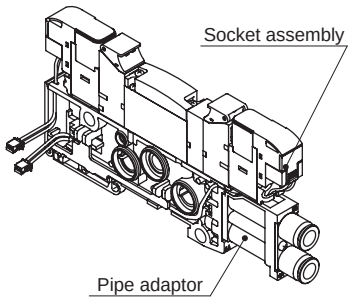

Piping

As problems may occur depending on the configuration, make selections with a sufficient understanding of the features of each block.

C. Discrete valve block (separate item only)

Valve block for expansion Cable length

Calculate the distance W between the expansion position and the wiring block (Fig. 1), and select an appropriate cable length from [Table 1].
Note that the required socket assembly will differ between the a side solenoid and the b side solenoid.
While Fig. 1 shows the wiring block with left side specifications, similarly calculate the distance W between the expansion position and the wiring block for the right side specifications.

Calculation of W

· For MN4G1
W=(10.5xn)+(16xm)+(10.5xl)

· For MN4G2
W=(16xn)+(18xm)+(10.5xl)

n: number of valve blocks m: number of supply and exhaust blocks l: number of partition blocks

· For MN4GX
Calculate W using the mix block width of 16.

[Table 1] W length - selection No. compatibility table

Selection No.	Type of wiring		
	T10/11(R)	T30/5*/6* (R)	T7*/T8*
2		0	25 or less
3	20 or less	Over 0 to 30	Over 25 to 55
4	Over 20 to 70	Over 30 to 80	Over 55 to 105
5	Over 70 to 120	Over 80 to 130	Over 105 to 155
6	Over 120 to 170	Over 130 to 180	Over 155 to 205
7	Over 170 to 260	Over 180 to 270	Over 205 to 295
8	Over 260 to 350	Over 270 to 360	Over 295 to 385
9	Over 350 to 450	Over 360 to 460	Over 385 to 485
10	Over 450 to 570	Over 460 to 580	Over 485 to 605

Fig. 1

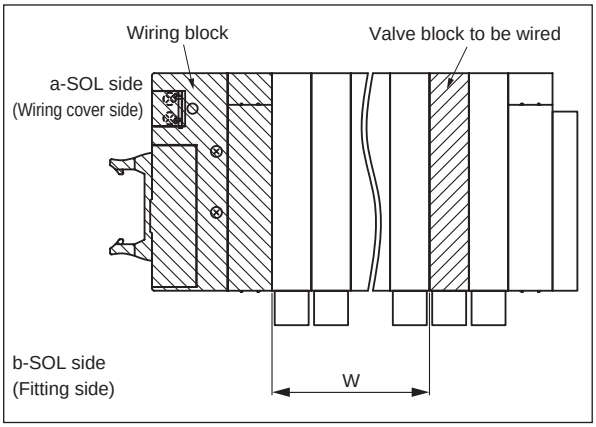

D. Supply and exhaust block

The supply and exhaust block can be installed at any position adjacent to the valve block.

As there is no set number of units, install two or more units when necessary for combinations with partition blocks or in order to increase the flow rate for supply and exhaust.

In order to prevent foreign matter from entering, the P-port is equipped with a filter.

N4G1R - Q - 8 X

Model No. Ⓐ Type Ⓑ Bore size Ⓒ Exhaust

Ⓐ Type	
Q	Internal pilot
QK	External pilot

*1: Available as custom order.
*2: Select 6*M or 8*M when using a silencer with inch fitting specification.
*3: For X, select atmosphere release (EX) for the end block.

Ⓑ Bore size	
6	ø6 push-in fitting
6L	ø6 push-in fitting upward
6D	ø6 push-in fitting down
8	ø8 push-in fitting
8L	ø8 push-in fitting upward
8D	ø8 push-in fitting downward
6N	ø1/4" push-in fitting
6LN	ø1/4" push-in upward *1
6DN	ø1/4" push-in downward *1
8N	ø5/16" push-in fitting
8LN	ø5/16" push-in upward *1
8DN	ø5/16" push-in downward *1
6M *2	P port ø1/4" push-in fitting R port ø6 push-in fitting
6LM *1, 2	P port ø1/4" push-in fitting upward R port ø6 push-in fitting upward
6DM *1, 2	P port ø1/4" push-in fitting downward R port ø6 push-in fitting downward
8M *2	P port ø5/16" push-in fitting R port ø8 push-in fitting *2
8LM *1, 2	P port ø5/16" push-in fitting upward R port ø8 push-in fitting upward
8DM *1, 2	P port ø5/16" push-in fitting downward R port ø8 push-in fitting downward

Ⓒ Exhaust	
Blank	Common exhaust
X*3	Atmospheric release

N4G2R - QK - 10L X

Model No. Ⓐ Type Ⓑ Bore size Ⓒ Exhaust

Ⓐ Type	
Q	Internal pilot
QK	External pilot

*1: Available as custom order.
*2: Select 6*M or 8*M when using a silencer with inch fitting specification.
*3: For X, select atmosphere release (EX) for the end block.

Ⓑ Bore size	
8	ø8 push-in fitting
8L	ø8 push-in fitting upward
8D	ø8 push-in fitting down
10	ø10 push-in fitting
10L	ø10 push-in fitting upward
10D	ø10 push-in fitting down
8N	ø5/16" push-in fitting
8LN	ø5/16" push-in upward *1
8DN	ø5/16" push-in downward *1
10N	ø3/8" push-in fitting
10LN	ø3/8" push-in upward *1
10DN	ø3/8" push-in downward *1
8M *2	P port ø5/16" push-in fitting R port ø8 push-in fitting
8LM *1, 2	P port ø5/16" push-in fitting upward R port ø8 push-in fitting upward
8DM *1, 2	P port ø5/16" push-in fitting downward R port ø8 push-in fitting downward
10M *2	P port ø3/8" push-in fitting R port ø10 push-in fitting
10LM *1, 2	P port ø3/8" push-in fitting upward R port ø10 push-in fitting upward
10DM *1, 2	P port ø3/8" push-in fitting downward R port ø10 push-in fitting downward

Ⓒ Exhaust	
Blank	Common exhaust
X*3	Atmospheric release

N4G1R-Q-8

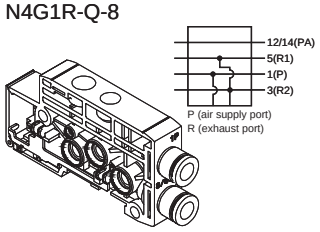

N4G1R-Q-8X

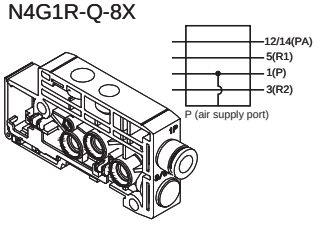

N4G2R-Q-10L

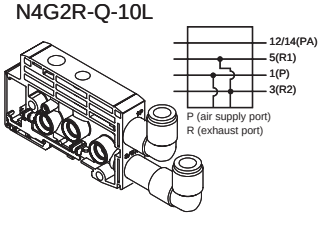

N4G2R-Q-10X

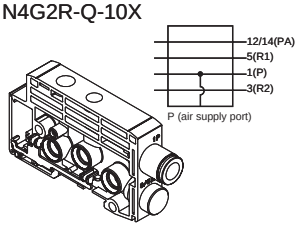

N4G1R-QK-8

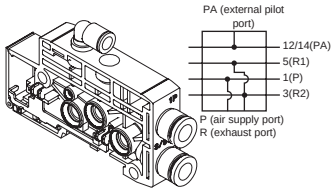

N4G1R-QK-8LX

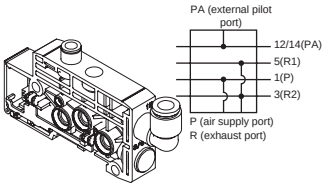

N4G2R-QK-10

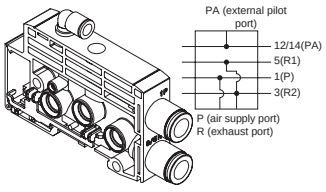

N4G2R-QK-10X

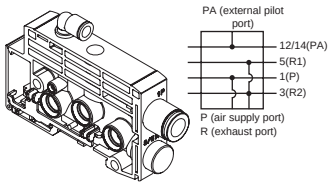

* External pilot port: ø6 push-in fitting

* External pilot port: ø6 push-in fitting

Piping

E. End block

Install on both ends of the manifold for individual wiring. Install on opposite sides of the wiring block for reduced wiring.
An exhaust muffler is built into the atmosphere release.

N4G1R - E R

Model No. Ⓐ Type Ⓑ Installation position

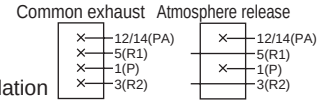

Ⓐ Type		Ⓑ Installation position	
E	Common exhaust	L	For left side
EX	Atmospheric release	R	For right side

N4G2R - EX L

Model No. Ⓐ Type Ⓑ Installation position

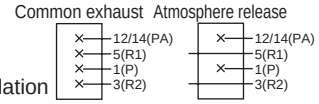

Ⓐ Type		Ⓑ Installation position	
E	Common exhaust	L	For left side
EX	Atmospheric release	R	For right side

N4G1R-EL

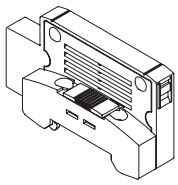

N4G1R-ER

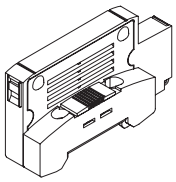

N4G2R-EL

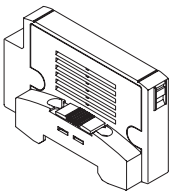

N4G2R-ER

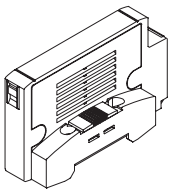

F. Partition block

Multi-pressure mixing and measures for back pressure increase prevention can be achieved by combining partition blocks and supply and exhaust blocks.

N4G1R - S

Model No. Ⓐ Type

Ⓐ Type	
SA	P/R/PA blocked
S	P/R blocked PA through
SP	P blocked R/PA through
SE	R blocked P/PA through

N4G1-S

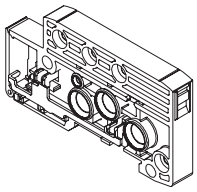

N4G2R - SA

Model No. Ⓐ Type

Ⓐ Type	
SA	P/R/PA blocked
S	P/R blocked PA through
SP	P blocked R/PA through
SE	R blocked P/PA through

N4G2-S

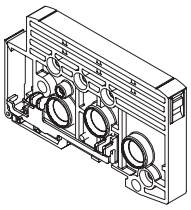

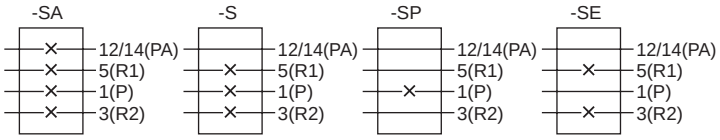

G. Mixed block

Install when 4G1 and 4G2 will be mixed within the same manifold.
Installation positions are 4G1 on the left side of the mixed block and 4G2 on the right side.

N4G12R - MIX

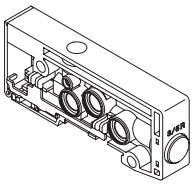

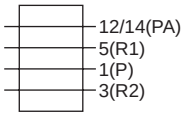

Wiring Wiring block cannot be ordered as a single item.

* "Wiring block" is the overall term for H. common terminal blocks, I. D-sub-connector blocks, J. flat cable connector blocks, and K. serial transmission blocks.

H. Common terminal box

M3 thread specifications

N4G1R-T10

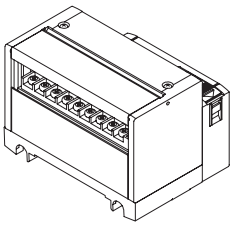

N4G1R-T10R

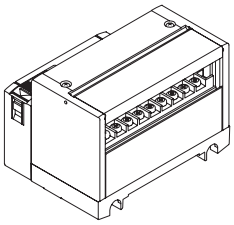

M3 thread specifications

N4G2R-T10

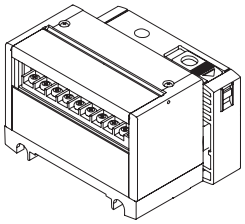

N4G2R-T10R

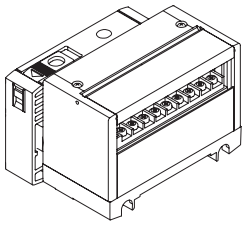

Clamping specifications

N4G1R-T11

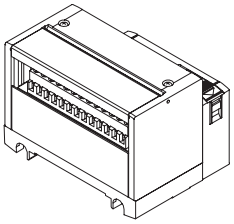

N4G1R-T11R

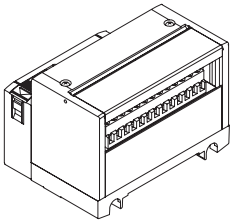

Clamping specifications

N4G2R-T11

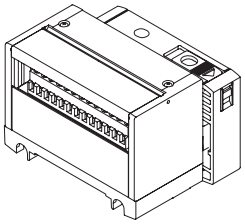

N4G2R-T11R

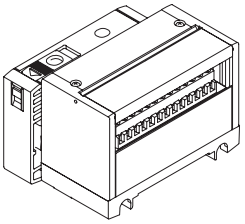

I. D sub-connector block

N4G1R-T30

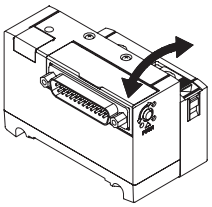

N4G1R-T30R

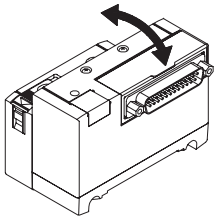

N4G2R-T30

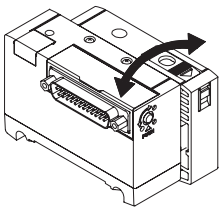

N4G2R-T30R

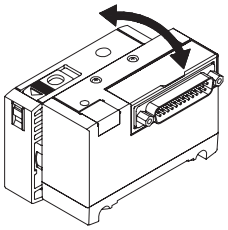

* Refer to page 819 for the model No. of cables with D sub-connector.

J. Flat cable connector block

● With power supply terminal

N4G1R-T50

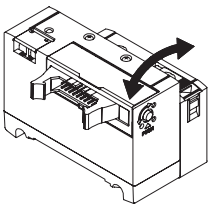

N4G1R-T50R

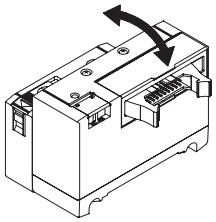

● With power supply terminal

N4G2R-T50

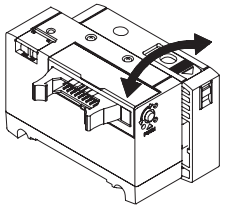

N4G2R-T50R

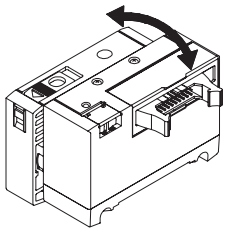

● Without power supply terminal

N4G1R-T51(N4G1R-T52) (N4G1R-T53)

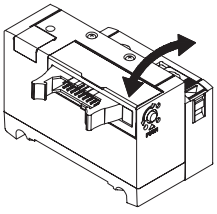

N4G1R-T51R(N4G1R-T52R) (N4G1R-T53R)

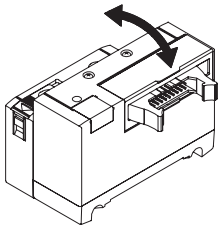

● Without power supply terminal

N4G2R-T51(N4G2R-T52) (N4G2R-T53)

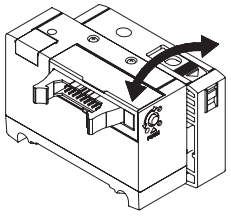

N4G2R-T51R(N4G2R-T52R) (N4G2R-T53R)

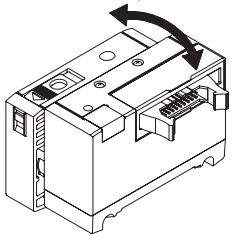

* The appearance of the connector unit varies with T52 and T53.

Wiring (Wiring block) * Wiring block cannot be ordered as a separate item.

K. Serial transmission block

● Connector type

N4G1R - T6G1

Model No. Ⓐ Type

Ⓐ Type			
T6G1	CC-Link	NPN	16 points

N4G1R-T6*

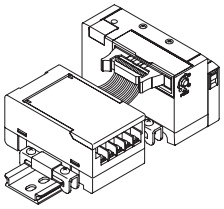

N4G2R - T6G1

Model No. Ⓐ Type

Ⓐ Type			
T6G1	CC-Link	NPN	16 points

N4G2R-T6*

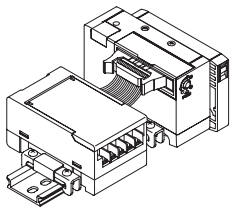

● Slim slot

N4G1R - T7D1

Model No. Ⓐ Type

Ⓐ Type			
T7D1	DeviceNet	NPN	16 points
T7G1	CC-Link		16 points
T7L1	SAVE NET		16 points
T7S1	CompoNet	NPN	16 points
T7SP1		PNP	

N4G1R-T7*

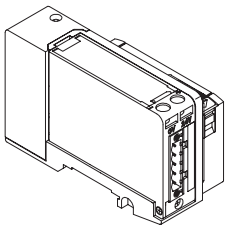

N4G2R - T7G1

Model No. Ⓐ Type

Ⓐ Type			
T7D1	DeviceNet	NPN	16 points
T7G1	CC-Link		16 points
T7L1	SAVE NET		16 points
T7S1	CompoNet	NPN	16 points
T7SP1		PNP	

N4G2R-T7*

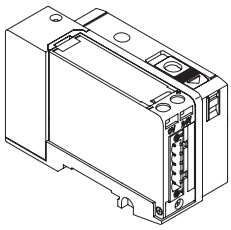

● Slim slot

N4G1R - T8G1

Ⓐ Wiring method

Ⓐ Wiring method			
T8G1	CC-Link	NPN	16 points
T8G2			32 points
T8GP1		PNP	16 points
T8GP2			32 points
T8P1	PROFIBUS-DP	NPN	16 points
T8P2			32 points
T8PP1		PNP	16 points
T8PP2			32 points
T8EC1	EtherCAT	NPN	16 points
T8EC2			32 points
T8ECP1		PNP	16 points
T8ECP2			32 points
T8EN1	EtherNet/IP	NPN	16 points
T8EN2			32 points
T8ENP1		PNP	16 points
T8ENP2			32 points
T8D1	DeviceNet	NPN	16 points
T8D2			32 points
T8DP1		PNP	16 points
T8DP2			32 points
T8EB1	CC-Link IEF Basic	NPN	16 points
T8EB2			32 points
T8EBP1		PNP	16 points
T8EBP2			32 points
T8EP1	PROFINET	NPN	16 points
T8EP2			32 points
T8EPP1		PNP	16 points
T8EPP2			32 points

N4G1R-T8*

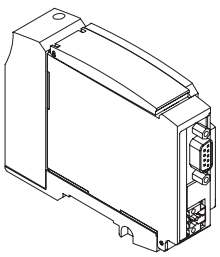

N4G2R - T8G1

Ⓐ Wiring method

Ⓐ Wiring method			
T8G1	CC-Link	NPN	16 points
T8G2			32 points
T8GP1		PNP	16 points
T8GP2			32 points
T8P1	PROFIBUS-DP	NPN	16 points
T8P2			32 points
T8PP1		PNP	16 points
T8PP2			32 points
T8EC1	EtherCAT	NPN	16 points
T8EC2			32 points
T8ECP1		PNP	16 points
T8ECP2			32 points
T8EN1	EtherNet/IP	NPN	16 points
T8EN2			32 points
T8ENP1		PNP	16 points
T8ENP2			32 points
T8D1	DeviceNet	NPN	16 points
T8D2			32 points
T8DP1		PNP	16 points
T8DP2			32 points
T8EB1	CC-Link IEF Basic	NPN	16 points
T8EB2			32 points
T8EBP1		PNP	16 points
T8EBP2			32 points
T8EP1	PROFINET	NPN	16 points
T8EP2			32 points
T8EPP1		PNP	16 points
T8EPP2			32 points

N4G2R-T8*

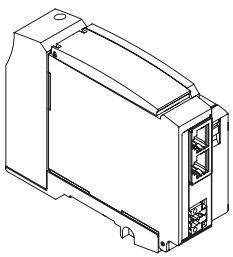

L. Serial transmission device unit* The serial transmission device unit may be ordered as a separate item.

● Single unit serial transmission device (adapter) station (connector connection)

4GR - OPP3 - 1G

Ⓐ Wiring method

Code	Description			
Ⓐ Wiring method				
1G	T6G1	CC-Link	NPN	16 points

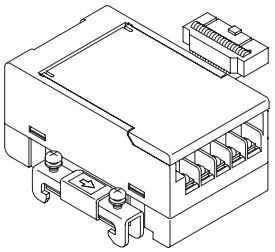

● Single unit serial transmission device (adapter) station (slim slot)

4GR - OPP4 - 1D

Ⓐ Wiring method

Code	Description			
Ⓐ Wiring method				
1D	T7D1	DeviceNet	NPN	16 points
1G	T7G1	CC-Link	NPN	16 points
1L	T7L1	SAVE NET	NPN	16 points
1S	T7S1	CompoNet	NPN	16 points
1S-P	T7SP1		PNP	16 points

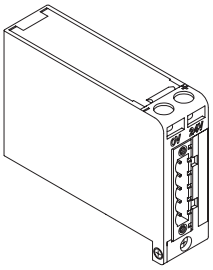

● Single unit serial transmission device (adapter) station (slim slot)

4GR - OPP7 - 2G

Ⓐ Wiring method

Code	Description			
Ⓐ Wiring method				
1G	T8G1	CC-Link	NPN	16 points
2G	T8G2			32 points
1G-P	T8GP1		PNP	16 points
2G-P	T8GP2			32 points
1P	T8P1	PROFIBUS-DP	NPN	16 points
2P	T8P2			32 points
1P-P	T8PP1		PNP	16 points
2P-P	T8PP2			32 points
1EC	T8EC1	EtherCAT	NPN	16 points
2EC	T8EC2			32 points
1EC-P	T8ECP1		PNP	16 points
2EC-P	T8ECP2			32 points
1EN	T8EN1	EtherNet/IP	NPN	16 points
2EN	T8EN2			32 points
1EN-P	T8ENP1		PNP	16 points
2EN-P	T8ENP2			32 points
1D	T8D1	DeviceNet	NPN	16 points
2D	T8D2			32 points
1D-P	T8DP1		PNP	16 points
2D-P	T8DP2			32 points
1EB	T8EB1	CC-Link IEF Basic	NPN	16 points
2EB	T8EB2			32 points
1EB-P	T8EBP1		PNP	16 points
2EB-P	T8EBP2			32 points
1EP	T8EP1	PROFINET	NPN	16 points
2EP	T8EP2			32 points
1EP-P	T8EPP1		PNP	16 points
2EP-P	T8EPP2			32 points

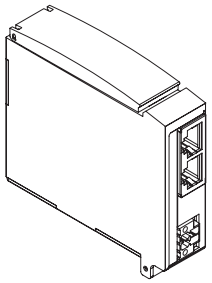

Related products

Mounting rail, silencer, blanking plug, tag plate

● Mounting rail

N4GR-BAA [length]

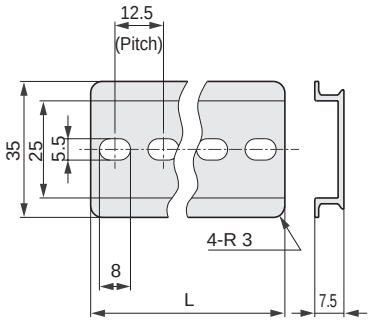

· Minimum length is 87.5 mm.
· Select the length at 12.5 mm pitch.
· Refer to page 308 for details.

● Silencer

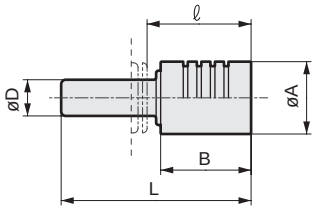

Model No.	D	L	A	B	ℓ
SLW-H6	ø6	41	16	20	23.5
SLW-H8	ø8	42	16	20	23
SLW-H10	ø10	53	20	27	31.5

● Blanking plug

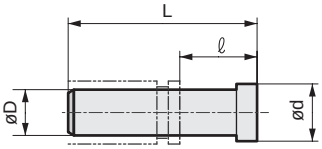

Model No.	D	L	ℓ	d
GWP4-B	ø4	27	16	6
GWP6-B	ø6	29	11.5	8
GWP8-B	ø8	33	14	10
GWP10-B	ø10	40	18.5	12

PG-P2-B (for ø1.8)

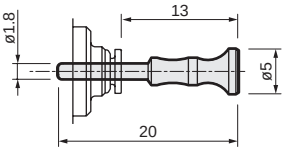

● Tag plates are shipped attached to the manifold body.
When required, mark a circle in the field for tag plates in the manifold specifications on pages 310 to 313.

[Tag holder]

N4G1 R-TAG-HOLDER

Ⓐ Model No.
N4G1
N4G2

(available in sets of 2.)

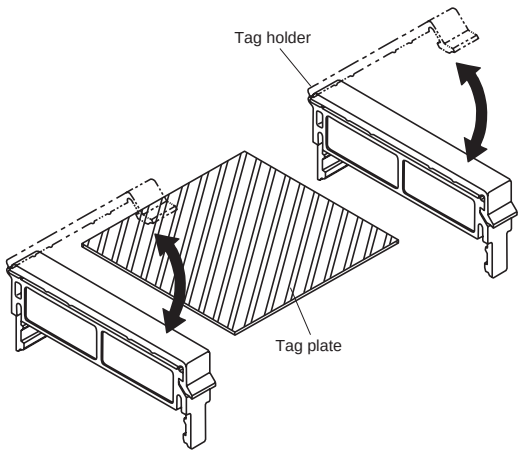

[Tag plate]

N4G1 R-TAG-PLATE-A-200 *1

Ⓐ Model No.	Ⓑ Type		Ⓒ Length (mm) *1
N4G1	A	MN4GA1/2 common	200
	B1	For MN4GB1, wide	300
	B2	For MN4GB1, narrow *2	400
N4G2	B	For MN4GB2	

*1: [Length] 200, 300 and 400 mm are available. Select according to the product length and cut the resin as required.
*2: With the narrow, manual operation is possible even with the tag plate on.
*3: Tag plates will not be attached when spacers are used in the manifold specifications.
*4: When DIN terminal box MN3GA2/MN4GA2 is selected, tag plates will not be attached.

Dimensions: Tag plate

MN4GA1/2

● Tag plate

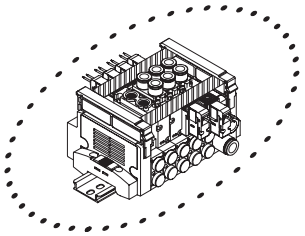

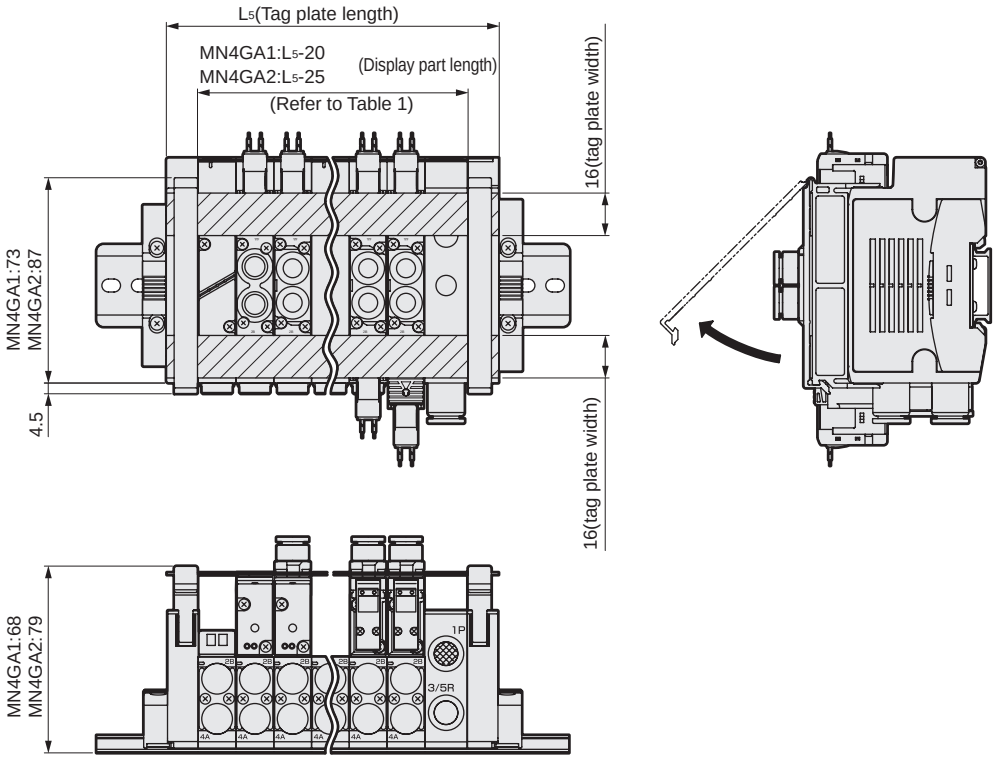

MN4GB1/2

● Tag plate

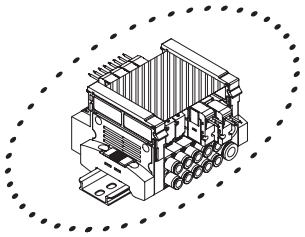

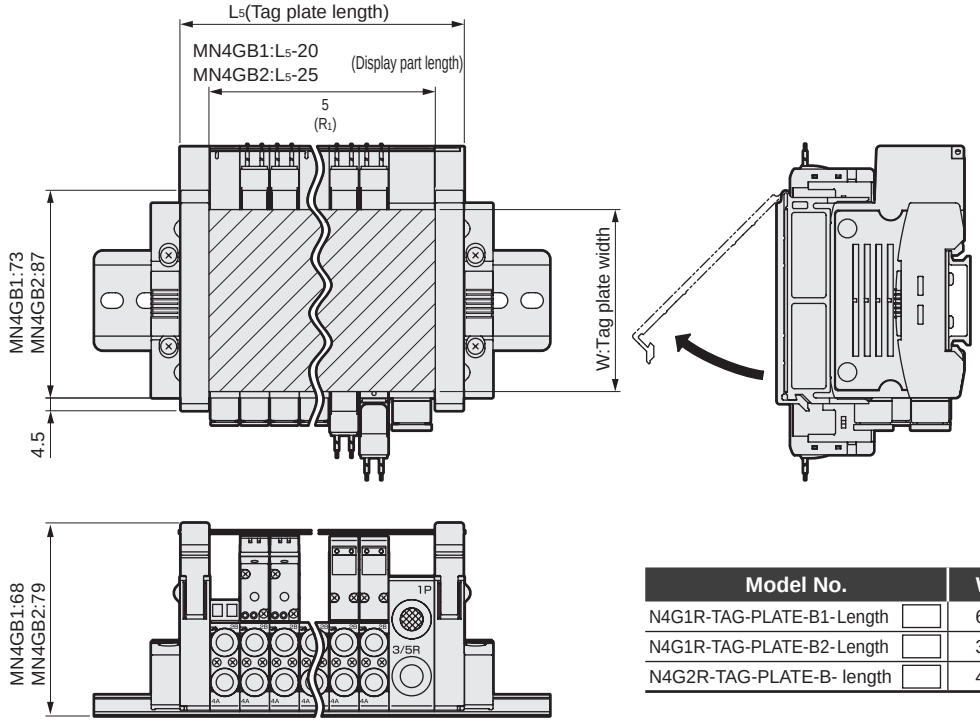

Model No.		W
N4G1R-TAG-PLATE-B1-Length	□	64
N4G1R-TAG-PLATE-B2-Length	□	30
N4G2R-TAG-PLATE-B- length	□	45

Table 1: Formula of L_5 (tag plate length)

MN4GA1	Individual wiring	$L_5=(10.5\times n)+(16\times m)+(10.5\times l)+20$
MN4GB1	Reduced wiring	$L_5=(10.5\times n)+(16\times m)+(10.5\times l)+25$
MN4GA2	Individual wiring	$L_5=(16\times n)+(18\times m)+(10.5\times l)+20$
MN4GB2	Reduced wiring	$L_5=(16\times n)+(18\times m)+(10.5\times l)+25$

n : Number of valve blocks
m: Number of supply and exhaust blocks
l : Number of partition blocks

Related products Air supply spacer

● Air supply spacer

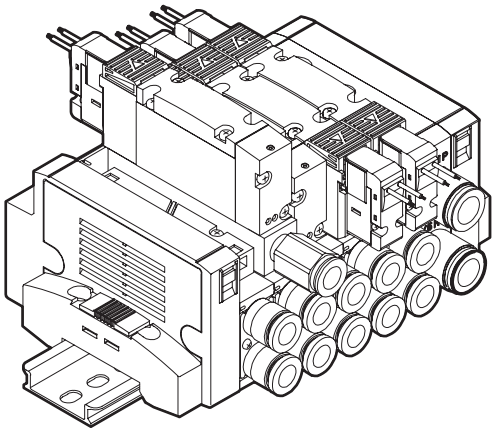

Specifications

Model No.	P→A/B		A/B→R		Weight g
	C[dm³/(s·bar)]	b	C[dm³/(s·bar)]	b	
4G1	0.70	0.23	0.93	0.16	8
4G2	1.6	0.17	1.8	0.16	35

*1: Values are when a valve is mounted.
*2: Effective cross-sectional area S and sonic conductance C are converted as S ≈ 5.0 x C.

How to order discrete units

4G 2 R − P − GWS6

Ⓐ Air supply spacer model No.
Ⓑ Port size

Code	Content	Model No. 4GA1	4GB1	4GA2	4GB2
Ⓐ Air supply spacer model No.					
1	For 4G1	●			
2	For 4G2			●	
Ⓑ Port size					
Blank	M5 (4G1), Rc1/8 (4G2)	●		●	
GWS4	ø4 fitting	●			
GWS6	ø6 fitting	●		●	
GWS8	ø8 fitting			●	
06N	1/8NPT thread			●	
06G	G1/8 thread			●	

is not available.

Attached products: 4G1 set screws (2), dedicated gasket (1)
4G2 set screws (2), PR check valves (2), body gasket (1)

⚠ Precautions for model selection

*1 Specify the positions and quantity of air supply spacers for manifold in the manifold specifications sheet.
*2 If the A/B port fitting is elbow, turn the air supply port of the air supply spacer toward the reverse side (“a” solenoid side).
*3 If the elbow (upward) A/B port fitting is used for the reduced wiring manifold, the air supply spacer cannot be selected.
*4 Combination with the masking plate is not supported.

Dimensions

● 4G1

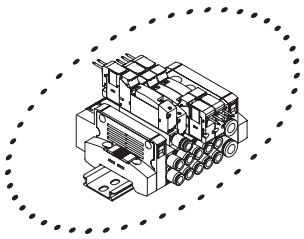

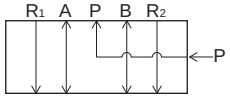

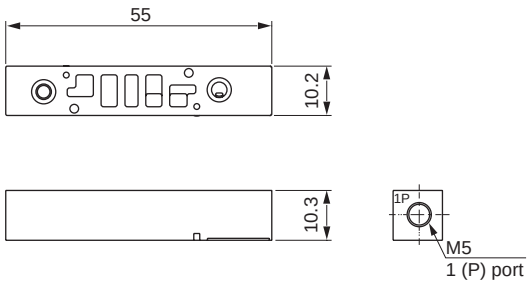

● 4G2

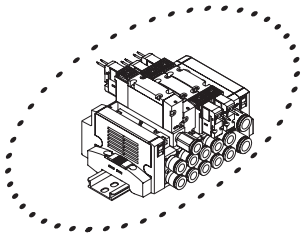

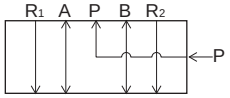

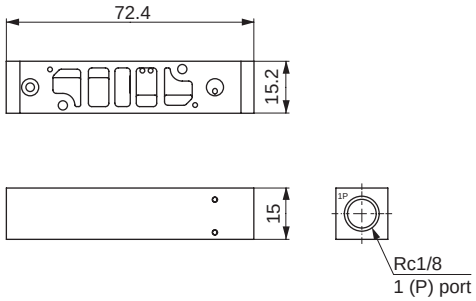

Dimensions when mounted

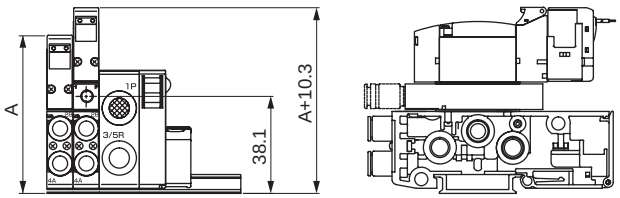

Dimensions when mounted

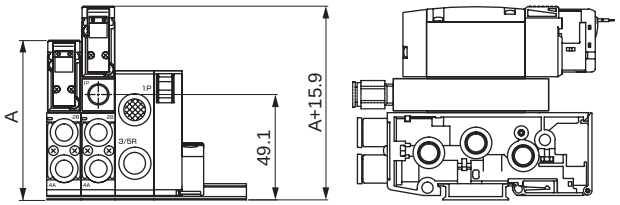

Note: For A dimensions, check the dimensions of the respective specifications.

Related products Exhaust spacer

● Exhaust spacer

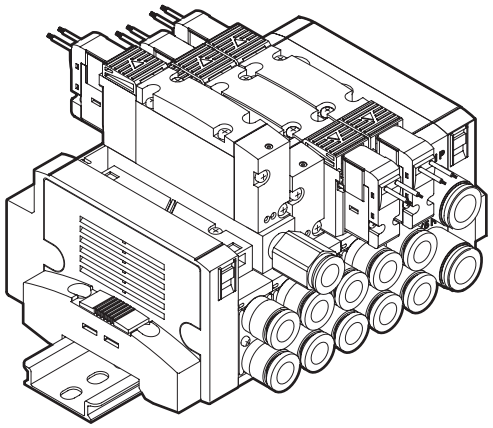

Specifications

Model No.	P→A/B		A/B→R		Weight g
	C[dm³/(s·bar)]	b	C[dm³/(s·bar)]	b	
4G1	0.94	0.28	0.68	0.33	7
4G2	1.5	0.24	1.9	0.24	34

*1: Values are when a valve is mounted.
*2: Effective cross-sectional area S and sonic conductance C are converted as S ≈ 5.0 x C.

How to order discrete units

4G ② R − R − GWS6

Ⓐ Exhaust spacer model No.
Ⓑ Port size

Code	Content	Model No. 4GA1	4GB1	4GA2	4GB2
Ⓐ Exhaust spacer model No.					
1	For 4G1	●			
2	For 4G2			●	
Ⓑ Port size					
Blank	M5 (4G1), Rc1/8 (4G2)	●		●	
GWS4	ø4 fitting	●			
GWS6	ø6 fitting	●		●	
GWS8	ø8 fitting			●	
06N	1/8NPT thread			●	
06G	G1/8 thread			●	

is not available.

Attached products: 4G1 set screws (2), dedicated gasket (1)
4G2 set screws (2), PR check valves (2), body gasket (1)

⚠ Precautions for model selection

*1 Specify the positions and quantity of exhaust spacers for manifold in the manifold specifications sheet.
*2 If the A/B port fitting is elbow, turn the exhaust port of the exhaust spacer toward the reverse side (“a” solenoid side).
*3 If the elbow upward A/B port fitting is used for the reduced wiring manifold, the exhaust spacer cannot be selected.
*4 Combination with the masking plate is not supported.

Dimensions

● 4G1

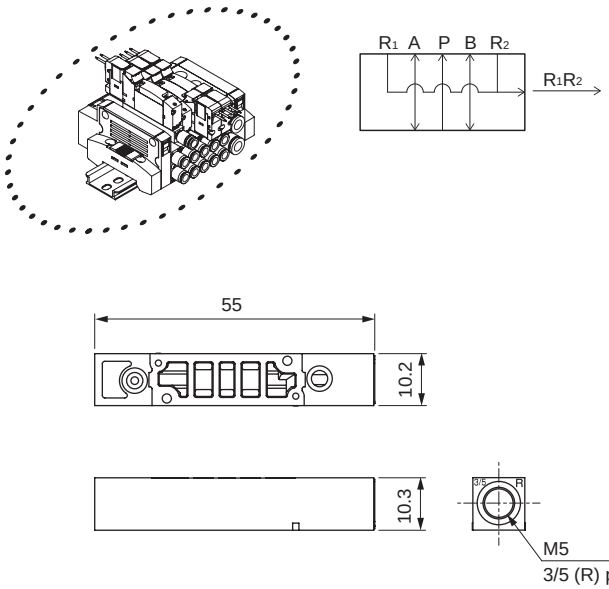

● 4G2

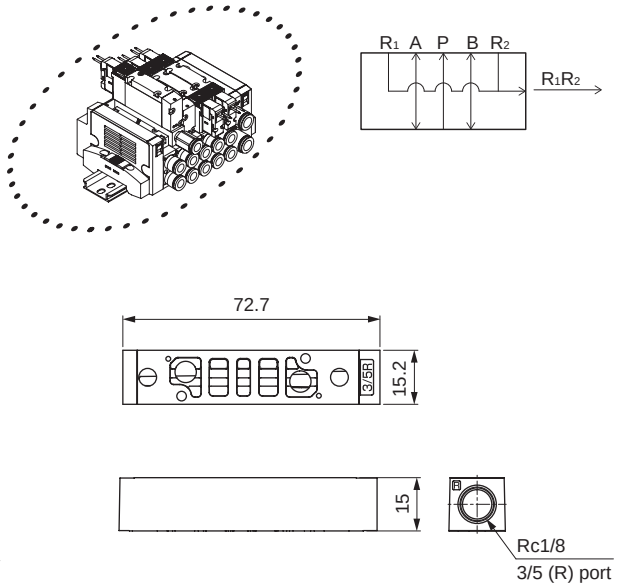

Dimensions when mounted

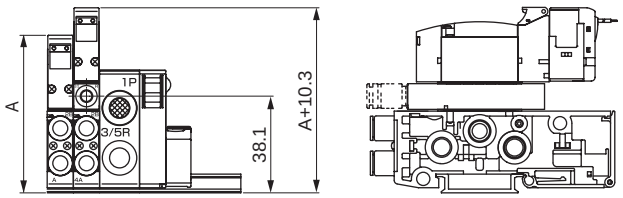

Dimensions when mounted

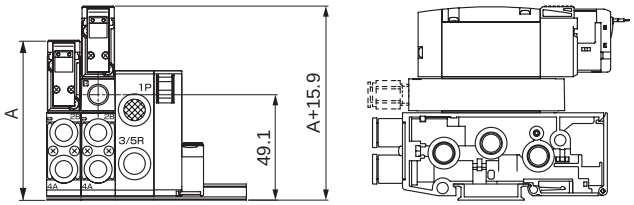

Note: For A dimensions, check the dimensions of the respective specifications.

Related products In-stop valve spacer

● In-stop valve spacer

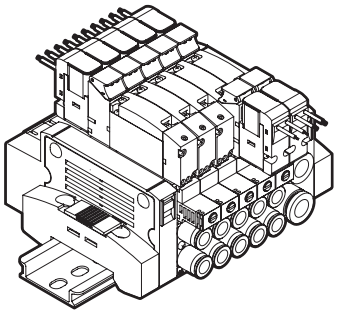

Specifications

Model No.	P→A/B		A/B→R		Weight g
	C[dm³/(s·bar)]	b	C[dm³/(s·bar)]	b	
4G1	0.54	0.03	0.82	0.27	17
4G2	1.5	0.17	1.6	0.20	63

*1: Values with base piping and 2-position valve mounted.
*2: The effective cross-sectional area when discharging residual pressure is 1.0 mm² (reference value).
*3: Effective cross-sectional area S and sonic conductance C are converted as S ≈ 5.0 x C.
Attached products: PR check valve (2), body gasket (1)

How to order discrete units

4G1R - IS

4G2R - IS

In-stop valve spacer

JIS symbol

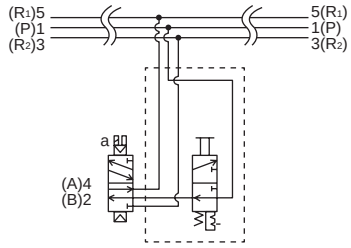

⚠ Precautions for model No. selection

*1: Specify the spacer mounting position and quantity in manifold specifications sheet.
*2: If the A/B port fitting is the elbow (upward), turn the operation part of the in-stop valve spacer toward the reverse side (“a” solenoid side).
*3: If the elbow (upward) A/B port fitting is used for the reduced wiring manifold, the in-stop valve spacer cannot be selected.
*4: The in-stop valve spacer cannot be used with the external pilot (K).
*5: When retrofitting to the reduced wiring manifold, the existing wiring may be too short. Contact CKD for details.

Dimensions

● 4G1

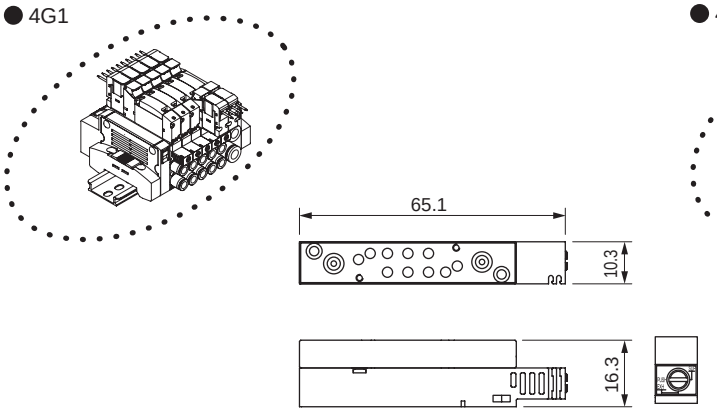

● 4G2

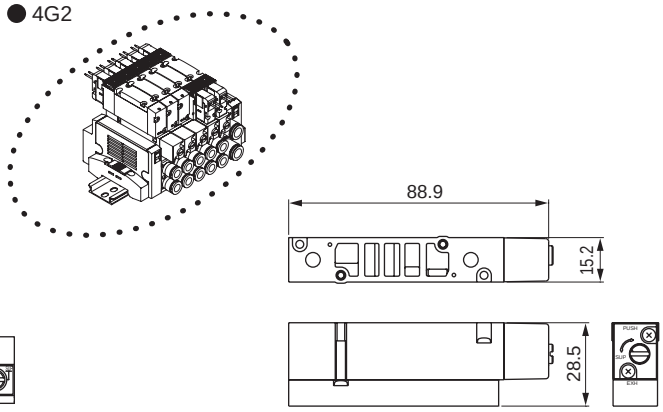

Dimensions when mounted

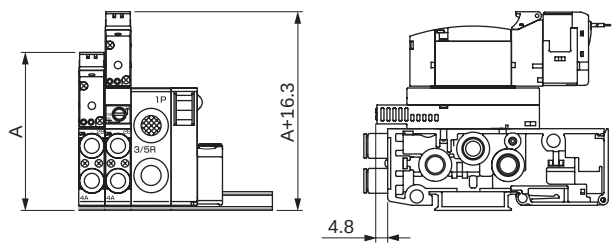

Dimensions when mounted

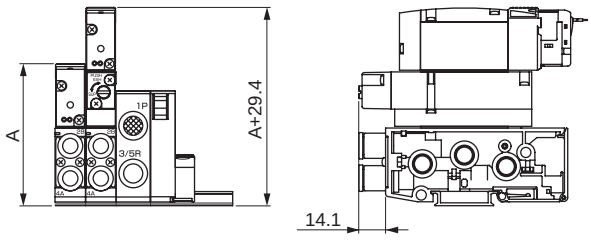

Note: For A dimensions, check the dimensions of the respective specifications.

Related products Spacer pilot check valve

● Spacer pilot check valve

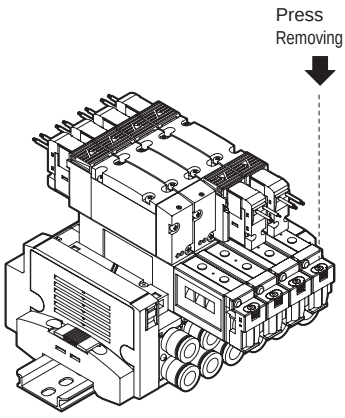

JIS symbol

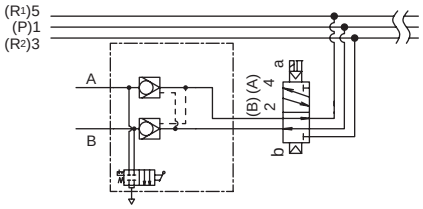

Note: Using a cylinder with a large diameter (more than ø50 as a guide) with little exhaust restriction (eg, no speed controller, no silencer) may lead to a decrease in intermediate stop accuracy and stopping error. Please be careful.

● Pilot check valve

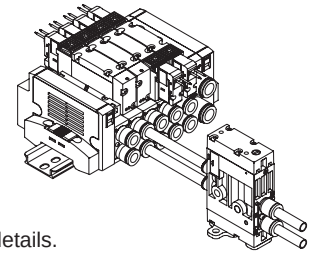

Refer to page 194 for details.

Specifications

Pilot check valve		4G1R-PC-M	4G2R-PC-M
Working fluid		Compressed air	
Max. working pressure	MPa	0.7	
Min. working pressure	MPa	0.2	0.1
Proof pressure	MPa	1.05	
Effective cross-sectional area	mm^2	1.6 (Solenoid valve)	3.5 (Solenoid valve)
Ambient temperature	°C	−5 to 55 (no freezing)	
Working fluid temperature	°C	5 to 55	
Lubrication	*1	Not required	
Atmosphere		Cannot be used in corrosive gas environment.	
Weight	g	22	54

*1:Use turbine oil Class 1 ISO VG32 for lubrication. Note that excessive lubricant may cause unstable operation.

Discrete model No.

4G1R -PC- M

Ⓐ Model No.
Pilot check valve

Code	Description	Ⓐ Model No. 4G1R	Ⓐ Model No. 4G2R
Ⓑ Residual pressure exhaust function			
M	Manual override of non-locking	●	●
M1	Locking manual override	●	●
Blank	Without manual override	●	●

⚠ Precautions for model No. selection

*1: Specify the spacer positions in the manifold specifications sheet.
*2: Spacer pilot check valve is not available when the fitting for port A/B is elbow.
*3: Stacking of spacers is not possible.
*4: A spacer cannot be combined with a masking plate.
*5: The spacer pilot check valve can be mounted only when the piping method is base piping.
*6: When adding a spacer to the reduced wiring manifold, the socket assembly lead wire will not reach far enough. Replace the valve block. (Refer to page 289 for details.)

Dimensions

● MN4GB1

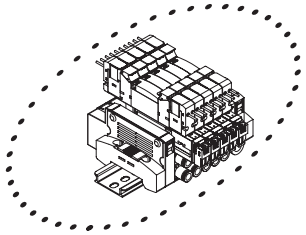

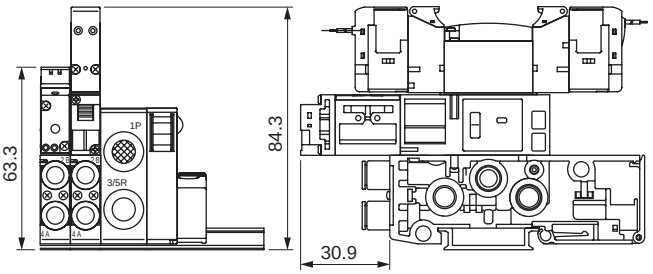

● MN4GB2

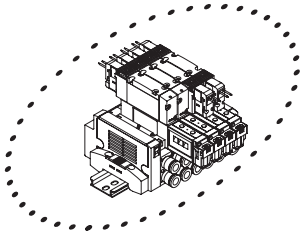

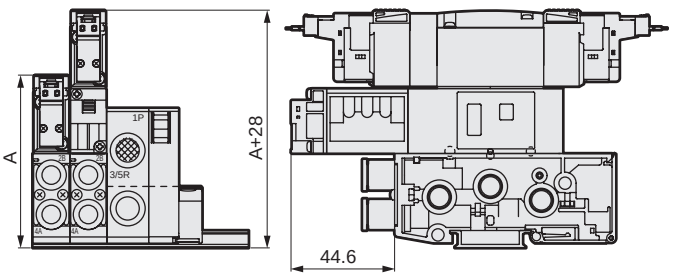

Note: For A dimension, check the Dimensions of the respective specifications.

Related products

● Residual pressure exhaust option

For manifolds

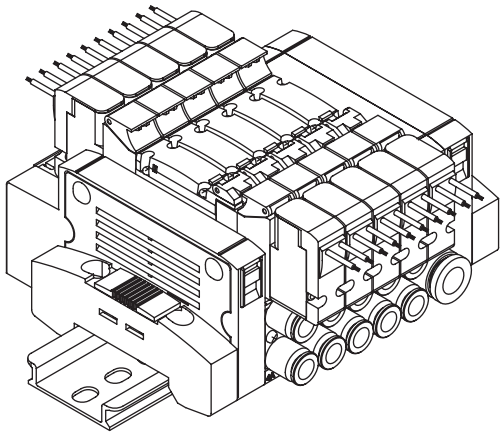

Discrete valve

4GB1

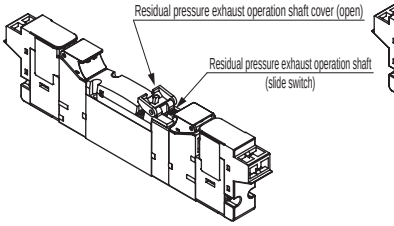

4GB2

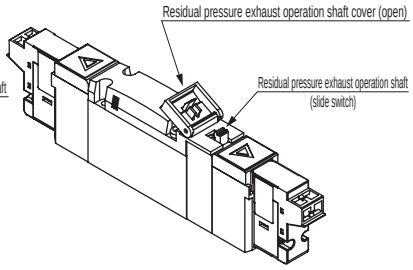

Example of model No.

● Block manifold model No.

MN4GB1 4 0R - C4 - E2 X1 - 10 - 3

Ⓐ Model No.
Ⓑ Solenoid position
Ⓒ Port size
Ⓓ Electrical connections
Ⓔ Option
Ⓕ Station No.
Ⓖ Voltage

Code	Description	Ⓐ Model No. MN4GB1	Ⓐ Model No. MN4GB2
Ⓔ Option			
X	Non-locking exhaust structure	●	●
X1	Locking exhaust structure	●	●

Pressure sensor (G1, G2) and residual pressure exhaust structure (X, X1) cannot be selected simultaneously. Exhaust structure is only compatible with 4GB1 and 4GB2 valve positions 3 and 4.

* Refer to How to order for each series for details about model numbers.

Applications

- 3-position all ports closed residual pressure exhaust for emergency stop
- Rod transfer after intermediate cylinder stop for three-position APR connection (with malfunction prevention valve)

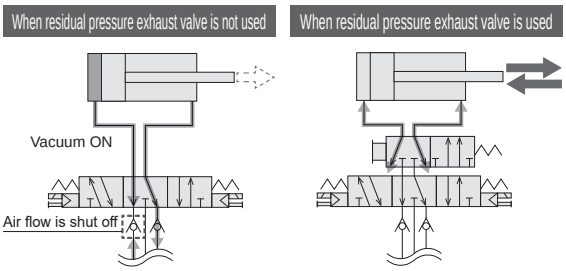

The malfunction prevention valve shuts off air flow. The cylinder rod cannot be adjusted.

The residual pressure discharger enables communication with the atmosphere. The cylinder rod can be adjusted.

Dimensions

● N4GB1

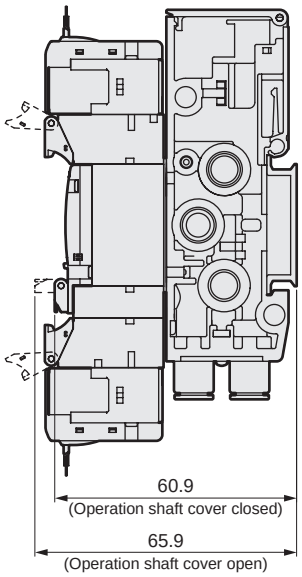

● N4GB2

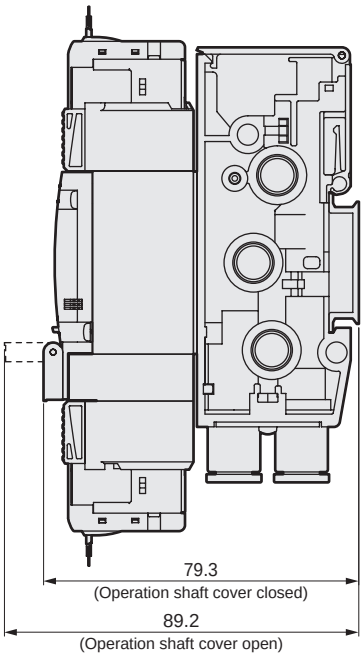

Related products Double wiring (with single spare wiring)

● Double wiring (with single spare wiring) (W1)

For manifolds

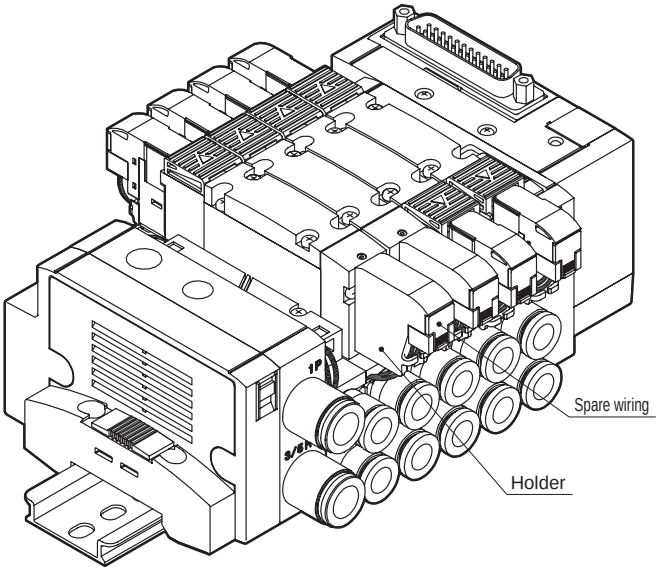

Spare wiring (holder and A type socket assembly) is included on the cap side for single solenoid valves.
This simplifies the workflow when changing valves from a single solenoid to a double solenoid, as you do not need to prepare the A type socket assembly separately.

For discrete valves (2-position single)

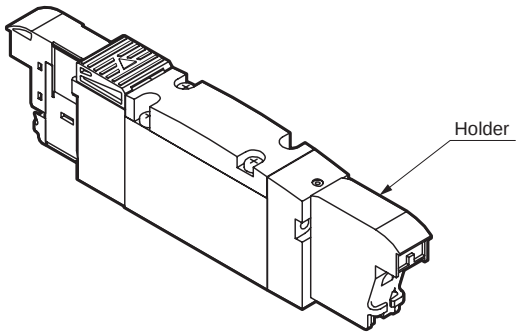

A holder for retaining the socket assembly is included.
(Not included for A type sockets.)
This can be used to hold the socket assembly no longer required when changing the valve from a double solenoid to a single solenoid.

Example of model No.

● Manifold model No. (example)

MN4GB1 1 0 R - C6 - T30 W1 H - 10 - 3

- Ⓐ Model No.
- Ⓑ Solenoid position
- Ⓒ Port size
- Ⓓ Wiring method
- Ⓕ Option
- Ⓖ Station No.
- Ⓗ Voltage

Code	Description
Ⓔ **Terminal/connector pin array**	
W1	Double wiring (with single spare wiring)

* Refer to How to order for each series for details about model numbers.
Not compatible with combination with port size C*NC or C*NO.

Related products Reduced wiring duct

● Reduced wiring duct (Q)

Holds A-connector lead wires.
· Can be selected with reduced wiring manifolds (T* and T*R) and reduced wiring discrete valve units (A2N).

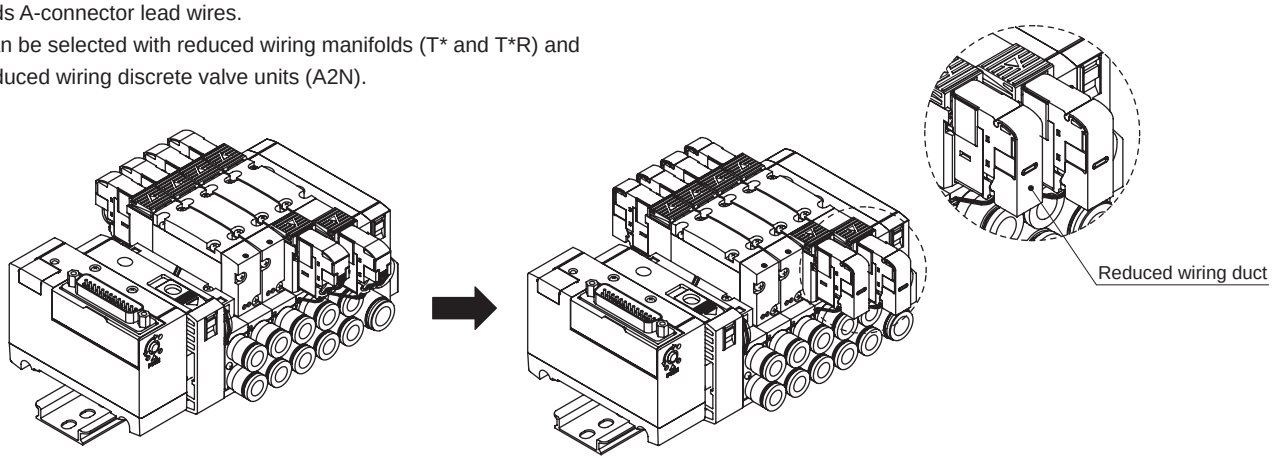

Standard

When Q (reduced wiring duct) selected

Example of model No.

● Manifold model No. (example)

MN4GB1 (A) 1 (B) 0 R - C6 (C) - T30 (D) W (E) Q - 10 (G) - 3 (H)

Code	Description
(F) Option	
Q	Reduced wiring duct

● Dimension lines

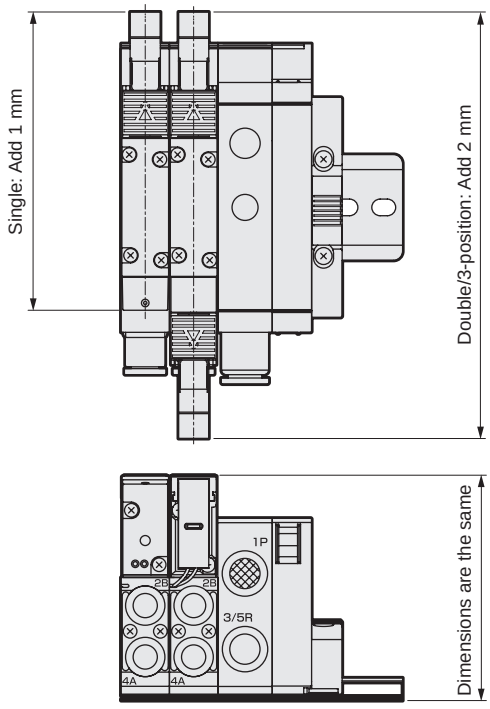

Reduced wiring duct closed state

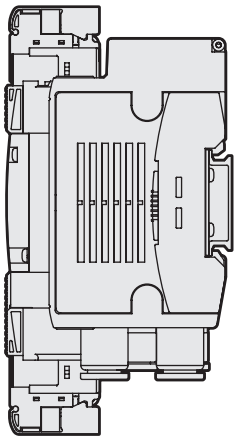

Open state

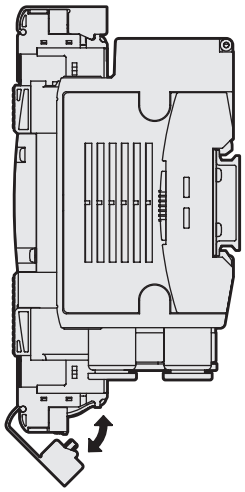

Related parts

1. MN4G cartridge push-in fitting for supply and exhaust block

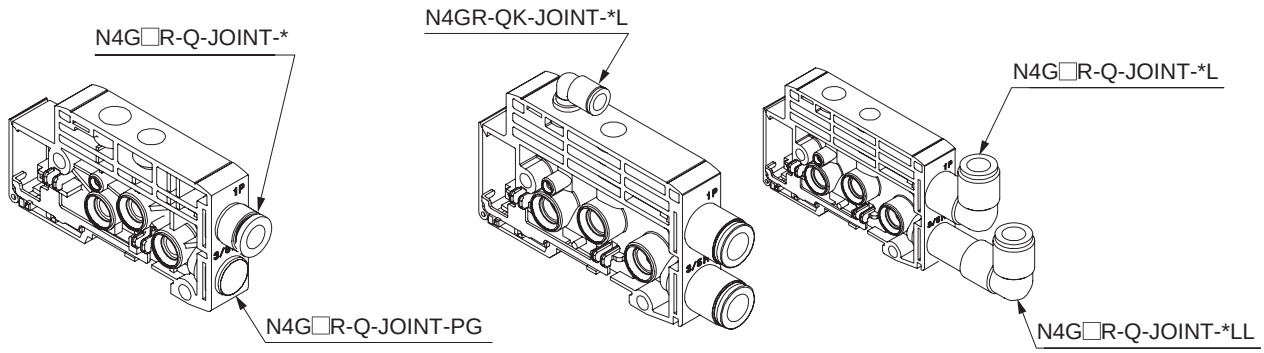

1.1 MN4G1 supply and exhaust block, fitting for 1(P), 3/5(R)

Bore size	Part model No.
ø6 straight	N4G1R-Q-JOINT-6
ø8 straight	N4G1R-Q-JOINT-8
ø6 elbow	N4G1R-Q-JOINT-6L,6LL
ø8 elbow	N4G1R-Q-JOINT-8L,8LL
ø1/4” straight	N4G1R-Q-JOINT-6N
ø5/16” straight	N4G1R-Q-JOINT-8N
ø1/4” elbow	N4G1R-Q-JOINT-6LN,6LLN
ø5/16” elbow	N4G1R-Q-JOINT-8LN,8LLN
Plug cartridge	N4G1R-Q-JOINT-PG

1.2 MN4G2 supply and exhaust block, fitting for 1(P), 3/5(R)

Bore size	Part model No.
ø8 straight	N4G2R-Q-JOINT-8
ø10 straight	N4G2R-Q-JOINT-10
ø8 elbow	N4G2R-Q-JOINT-8L,8LL
ø10 elbow	N4G2R-Q-JOINT-10L,10LL
ø5/16” straight	N4G2R-Q-JOINT-8N
ø3/8” straight	N4G2R-Q-JOINT-10N
ø5/16” elbow	N4G2R-Q-JOINT-8LN,8LLN
ø3/8” elbow	N4G2R-Q-JOINT-10LN,10LLN
Plug cartridge	N4G2R-Q-JOINT-PG

1.3 MN4G1/2 common, fitting for 12/14(PA)

Bore size	Part model No.
ø6 straight	N4GR-QK-JOINT-6
ø6 elbow	N4GR-QK-JOINT-6L

How to fill out block manifold MN4G series manifold specifications sheet

● Manifold model No. (example)

MN 4 GA1 8 0R - CX - T50 W H - 8 - 3

Ⓐ Model No. Ⓑ Solenoid position Ⓒ Port size Ⓓ Electrical connection (reduced wiring connection) Ⓔ Terminal/connector pin array (Note: Fill in for reduced wiring.) Ⓕ Option Ⓖ Station No. Ⓗ Voltage

When filling in this field, select the model No. from "Block configurations" (pages 287 to 305).

Part name	Model No.	Layout position 1	2	3	4	5	6	7	8	9	10	11	12	13	14	15	16	17	18	19	20	21	22	23	24	25	26	27	28	29	30	Quantity
Wiring block (Pages 292, 293)	N4G1R-T 50	○																														1
Valve block with solenoid valve (page 288)	N4GA1 1 0R- C4 -		○	○																												2
	N4GA1 2 0R- C6 -					○																										1
	N4GA1 3 0R- C4 -				○																											1
	N4GA1 0R- -																															
	N4GA1 0R- -																															
	N4GA1 0R- -																															
	N3GA1 1 0R- C4 -									○	○	○																				3
	N3GA1 0R- -																															
Valve block with masking plate (Page 288)	N4GA1R-MP																															
	N4GA1R-MPS																															
	N4GA1R-MPD						○																									1
Supply and exhaust block (page 290)	N4G1R-Q - 8L							○					○																			2
	N4G1R-Q -																															
	N4G1R-Q -																															
Partition block (page 291)	N4G1R-S A								○																							1
	N4G1R-S																															
	N4G1R-S																															
End block (page 291)	N4G1R-E R													○																		1
	N4G1R-E																															

Mounting rail	L_2= (How to calculate length on next page)	Blanking plug						Silencer				Tag plate (attachment)		Accessory
		GWP4-B		GWP6-B		GWP8-B		SLW-H6		SLW-H8		A	○	
		Cable with D sub-connector		4GR-CABLE-D0□-□				Push-in fitting tube remover (attached as standard) ☑ Not required (check the box)						

Place a check here if the tube remover (standard attached product) is not required.

* A circuit diagram of the above manifold model No. (example) is provided on the following page. Use for reference.

Preparing manifold specifications sheet

● Complete from the left end, with the piping port facing forward.
(Write the block model numbers and positions you determined referring to the block configurations (pages 287 to 305).)
● Write the total number of blocks specified in the quantity field at the table far right.
● Mark a circle for attached parts that are required.
● Indicate the mounting rail length. (Fill in only when a length other than the standard length is required.)
● As there are manifold specifications sheets for each of the various series, fill in the form for the corresponding specifications.
·MN4GA1: Page 310
·MN4GB1: Page 311
·MN4GA2: Page 312
·MN4GB2: Page 313
·MN4GAx1/2 (Mix manifold): page 314
·MN4GBx1/2 (Mix manifold): page 315

MN4GA/4GB Series

● Mounting rail model No.: N4GR-BAA Length

Mounting rail length (L2)

①Determine the rail length using the calculation method shown below. The obtained length is standard.
②For standard length, length (L2) is not required on the specification sheet. Indicate the length when using a non-standard length.

● How to determine the length of the mounting rail

Manifold length (L1) = (A x [Valve block Quantity]) + (B x [Supply and exhaust block Quantity]) + (C x [Partition block Quantity]) + D [Wiring block] + E [Mixed block]

Mounting rail length (L2) = L2' x 12.5 A, B, C, D, and E indicate the length (width) of each block.

$$L2' : \frac{L1+40}{12.5} \rightarrow \text{decimals rounded up}$$

Rail mounting pitch (L3) = L2-12.5

Block length (width) dimensions table (mm)

			MN4GA/B1	MN4GA/B2	MN4G1/2MIX	
					MN4GA/B1	MN4GA/B2
A	Valve block		10.5	16	10.5	16
B	Supply and exhaust block		16	18	16	18
C	Partition block		10.5	10.5	10.5	10.5
D	Individual wiring		41.2	46.2	43.7	
	Wiring block for reduced wiring	T10/T11	83.9	86.4	86.4	
		T10R/T11R	83.9	86.4	83.9	
		T30/T5*	69.4	71.9	71.9	
		T30R/T5*R	69.4	71.9	69.4	
		T6G1	143.6	146.1	146.1	
		T7*	64.4	66.9	66.9	
		T8*	64.4	66.9	66.9	
E	Mixed block				16	

* The end block is included in the wiring block.

● Mounting rail length quick reference table

L1: Manifold length	47.5 or less	47.5 Over to 60 or less	60 to 72.5	72.5 to 85	85 to 97.5	97.5 to 110	110 to 122.5	122.5 to 135	135 to 147.5	147.5 to 160	160 to 172.5	172.5 to 185	185 to 197.5	197.5 to 210	210 to 222.5	222.5 to 235	235 to 247.5	247.5 to 260	260 to 272.5	272.5 to 285	285 to 297.5	297.5 to 310	310 to 322.5	322.5 to 335	335 to 347.5	347.5 to 360
L2: Rail length	87.5	100	112.5	125	137.5	150	162.5	175	187.5	200	212.5	225	237.5	250	262.5	275	287.5	300	312.5	325	337.5	350	362.5	375	387.5	400
Pitch L3	75	87.5	100	112.5	125	137.5	150	162.5	175	187.5	200	212.5	225	237.5	250	262.5	275	287.5	300	312.5	325	337.5	350	362.5	375	387.5

*1: When L1 exceeds this table, calculate the length by referring to "How to calculate the length of the mounting rail".

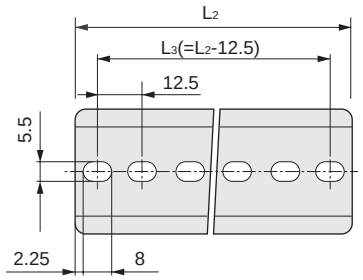

How to fill out wiring specifications sheet

Not required for standard wiring and double wiring.

● Wiring specifications sheet (example)

* The following example has been filled out in accordance with the manifold specifications sheet on the previous page.

Connector pin No.				Valve No.																						
T50/T50R	T51/T51R	T52/T52R	T53/T53R	1	2	3	4	5	6	7	8	9	10	11	12	13	14	15	16	17	18	19	20	21	22	23	24
1	1	1	1	a																							
2	2	2	2		a																						
3	3	3	3				a																				
4	4	4	4				b																				
5	5	5	5					a																			
6	6	6	6					b																			
7	7	7	7			a																					
8	8	8	8			b																					
9 - Power supply	9	9 COM	9																								
10 + (COM) Power supply	10	10 COM	10																								
11	11		11						a																		
12	12		12							a																	
13	13		13								a																
14	14		14																								
15	15		15																								
16	16		16																								
17	17		17																								
18	18		18																								
19 - Power supply	19 COM		19																								
20 + (COM) Power supply	20 COM		20																								
			21																								
			22																								
			23																								
			24																								
			25 COM																								
			26 COM																								

* Note that when the wiring method is T50/T50R, the COM polarity will be + (positive).

● Notes on wiring specifications sheet

(1) Fill in and attach to the manifold specifications sheet for anything other than the standard wiring or double wiring. Consult with CKD, as products will be made to order in this case.

(2) The valve No. is determined by counting the valve blocks only in order from the left with the ports facing forward. Note that this differs from the installation position numbers.

(3) As the connector pin No. and valve No. differ for each reduced wiring method (T1*/T30/T5*/T6G1/T7*/T8*), fill out the form upon reviewing the notes (pages 816 to 835) for each.

(4) Wiring (socket assembly) is included with valve blocks with masking plates. A side only for "-MPS". Both A and B sides for "-MPD".

(5) Double solenoids or 3-position solenoid valves cannot be assembled to "-MPS". Order valve block with solenoid valve and carry out expansion.

(6) It is not possible to install spare wires for station expansion in advance. Wire the socket assembly of the solenoid valve for expansion of stations. Refer to page 836 for instructions on how to expand stations.

Reference circuit diagram Simplified circuit diagram of manifold model No. (example) from previous page

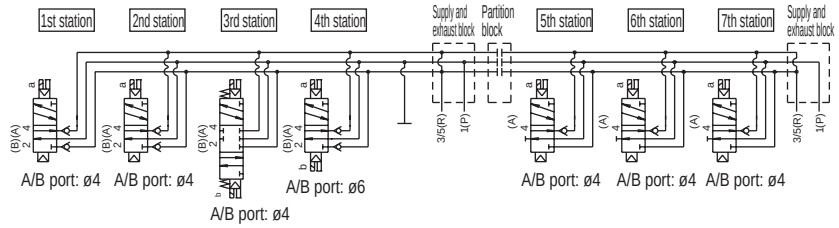

* The manifold station numbers are set in order from the left with the piping port facing forward.
(Wiring blocks, supply and exhaust blocks, partition block, and end block are not included in the manifold station No.)

* Select the model No. from block configuration (pages 287 to 305) and each specification model No. page.

* With piping port facing front, arrangement positions are set in order from the left.

MN4GA1 Block manifold specifications sheet

● Contact ● Quantity Set ● Delivery date /

Slip No. | Order No.

Issued / /

Company

Contact

Order No.

● Manifold model No.

MN □ GA1 □ 0R - □ - □ □ □ - □ - □

Ⓐ Model No. Ⓑ Solenoid position Ⓒ Port size Ⓓ Electrical connections (Reduced wiring connection) Ⓔ Terminal/connector Ⓕ Option Ⓖ Station No. Ⓗ Voltage

When filling in this field, select the model No. from "Block configurations" (pages 287 to 305). pin array (Note: Fill in for reduced wiring.)

Part name (Page)	Model No.	Layout position 1	2	3	4	5	6	7	8	9	10	11	12	13	14	15	16	17	18	19	20	21	22	23	24	25	26	27	28	29	30	Quantity
Wiring block (pages 292, 293)	N4G1R-T □																															
Valve block with solenoid valve (page 288)	N4GA1 □ 0R- □																															
	N4GA1 □ 0R- □																															
	N4GA1 □ 0R- □																															
	N4GA1 □ 0R- □																															
	N4GA1 □ 0R- □																															
	N4GA1 □ 0R- □																															
	N3GA1 □ 0R- □																															
	N3GA1 □ 0R- □																															
Valve block with masking plate (Page 288)	N4GA1R-MP																															
	N4GA1R-MPS																															
	N4GA1R-MPD																															
Air supply spacer (page 297)	4G1R-P- □																															
	4G1R-P- □																															
Exhaust spacer (Page 299)	4G1R-R- □																															
In-stop valve spacer (page 301)	4G1R-IS																															
Supply and exhaust block (Page 290)	N4G1R-Q □ - □																															
	N4G1R-Q □ - □																															
	N4G1R-Q □ - □																															
Partition block (Page 291)	N4G1R-S □																															
	N4G1R-S □																															
	N4G1R-S □																															
End block (Page 291)	N4G1R-E □																															
	N4G1R-E □																															

Mounting rail	Blanking plug								Silencer				Tag plate (attachment)		Accessory
L_2= □	PG-P2-B		GWP4-B		GWP6-B		GWP8-B		SLW-H6		SLW-H8		A		
* Write an integer multiple of 12.5.	Cable with D sub-connector				4GR-CABLE-D0□-□				Push-in fitting tube remover (attached as standard) □ Not required (check the box)						
(How to determine the length page 308)															

MN4GB1 Block manifold specifications sheet

● Contact ● Quantity set(s) ● Delivery date /

Slip No. | Order No.

Issued / /

Company

Contact

Order No.

● Manifold model No.

MN4GB1 □ 0R- □ - □ □ □ - □ - □

Ⓐ Model No. Ⓑ Solenoid position Ⓒ Port size Ⓓ Electrical connections (Reduced wiring connection) Ⓔ Terminal/connector pin array (Note: Fill in for reduced wiring.) Ⓕ Option Ⓖ Station No. Ⓗ Voltage

When filling in this field, select the model No. from "Block configurations" (pages 287 to 305).

Part name (Page)	Model No.	Layout position 1	2	3	4	5	6	7	8	9	10	11	12	13	14	15	16	17	18	19	20	21	22	23	24	25	26	27	28	29	30	Quantity
Wiring block (pages 292, 293)	N4G1R-T □																															
Valve block with solenoid valve (page 288)	N4GB1 □ 0R- □ - □																															
	N4GB1 □ 0R- □ - □																															
	N4GB1 □ 0R- □ - □																															
	N4GB1 □ 0R- □ - □																															
	N4GB1 □ 0R- □ - □																															
	N4GB1 □ 0R- □ - □																															
	N3GB1 □ 0R- □ - □																															
	N3GB1 □ 0R- □ - □																															
Valve block with masking plate (Page 288)	N4GB1R-MP- □																															
	N4GB1R-MPS- □																															
	N4GB1R-MPD- □																															
Air supply spacer (page 297)	4G1R-P- □																															
	4G1R-P- □																															
Exhaust spacer (Page 299)	4G1R-R- □																															
In-stop valve spacer (page 301)	4G1R-IS																															
Spacer pilot Check valve (page 301)	4G1R-PC- □																															
Supply and exhaust block (Page 290)	N4G1R-Q □ - □																															
	N4G1R-Q □ - □																															
	N4G1R-Q □ - □																															
Partition block (Page 291)	N4G1R-S □																															
	N4G1R-S □																															
	N4G1R-S □																															
End block (Page 291)	N4G1R-E □																															
	N4G1R-E □																															

Mounting rail	L_2= □ * Write an integer multiple of 12.5 Please fill in. (How to determine the length page 308)	Blanking plug								Silencer				Tag plate (included)				Accessory
		PG-P2-B	□	GWP 4-B	□	GWP 6-B	□	GWP 8-B	□	SLW-H6	□	SLW-H8	□	B1	□	B2	□	
		Cable with D sub-connector		4GR-CABLE-D0□-□						□	Push-in fitting tube remover (attached as standard) □ Not required (check the box)								

MN4GA2 Block manifold specifications sheet

● Contact ● Quantity Set ● Delivery date /

Slip No. | Order No.

Issued / /

Company

Contact

Order No.

● Manifold model No.

MN □ GA2 □ 0R - □ - □ □ □ - □ - □

Ⓐ Model No. Ⓑ Solenoid position Ⓒ Port size Ⓓ Electrical connections (Reduced wiring connection) Ⓔ Terminal/connector pin array (Note: Fill in for reduced wiring.) Ⓕ Option Ⓖ Station No. Ⓗ Voltage

When filling in this field, select the model No. from "Block configurations" (pages 287 to 305).

Part name (Page)	Model No.	Layout position 1	2	3	4	5	6	7	8	9	10	11	12	13	14	15	16	17	18	19	20	21	22	23	24	25	26	27	28	29	30	Quantity
Wiring block (pages 292, 293)	N4G2R-T □																															
Valve block with solenoid valve (page 288)	N4GA2 □ 0R- □																															
	N4GA2 □ 0R- □																															
	N4GA2 □ 0R- □																															
	N4GA2 □ 0R- □																															
	N4GA2 □ 0R- □																															
	N4GA2 □ 0R- □																															
	N3GA2 □ 0R- □																															
	N3GA2 □ 0R- □																															
Valve block with masking plate (Page 288)	N4GA2R-MP																															
	N4GA2R-MPS																															
	N4GA2R-MPD																															
Air supply spacer (page 297)	4G2R-P- □																															
	4G2R-P- □																															
Exhaust spacer (Page 299)	4G2R-R- □																															
In-stop valve spacer Spacer (page 301)	4G2R-IS																															
Supply and exhaust block (Page 290)	N4G2R-Q □ - □																															
	N4G2R-Q □ - □																															
	N4G2R-Q □ - □																															
Partition block (Page 291)	N4G2R-S □																															
	N4G2R-S □																															
	N4G2R-S □																															
End block (Page 291)	N4G2R-E □																															
	N4G2R-E □																															

Mounting rail	Blanking plug				Silencer		Tag plate (attachment)		Accessory
L_2= □	GWP4-B		GWP8-B		SLW-H8		A		
* Write an integer multiple of 12.5.	GWP6-B		GWP10-B		SLW-H10				
(How to determine the length page 308)	Cable with D sub-connector		4GR-CABLE-D0□-□						

MN4GB2 Block manifold specifications sheet

● Contact ● Quantity Set ● Delivery date /

Slip No. | Order No.

Issued / /

Company

Contact

Order No.

● Manifold model No.

MN4GB2 □ 0R - □ - □ □ □ - □ - □

Ⓐ Model No. Ⓑ Solenoid position Ⓒ Port size Ⓓ Electrical connections (Reduced wiring connection) Ⓔ Terminal/connector pin array (Note: Fill in for reduced wiring.) Ⓕ Option Ⓖ Station No. Ⓗ Voltage

When filling in this field, select the model No. from "Block configurations" (pages 287 to 305).

Part name (Page)	Model No.	Layout position 1	2	3	4	5	6	7	8	9	10	11	12	13	14	15	16	17	18	19	20	21	22	23	24	25	26	27	28	29	30	Quantity
Wiring block (pages 292, 293)	N4G2R-T □																															
Valve block with solenoid valve (page 288)	N4GB2 □ 0R- □ - □																															
	N4GB2 □ 0R- □ - □																															
	N4GB2 □ 0R- □ - □																															
	N4GB2 □ 0R- □ - □																															
	N4GB2 □ 0R- □ - □																															
	N4GB2 □ 0R- □ - □																															
	N3GB2 □ 0R- □ - □																															
	N3GB2 □ 0R- □ - □																															
Valve block with masking plate (Page 288)	N4GB2R-MP- □																															
	N4GB2R-MPS- □																															
	N4GB2R-MPD- □																															
Air supply spacer (page 297)	4G2R-P- □																															
	4G2R-P- □																															
Exhaust spacer (Page 299)	4G2R-R- □																															
In-stop valve spacer Spacer (page 301)	4G2R-IS																															
Spacer pilot check valve (Page 302)	4G2R-PC□																															
Supply and exhaust block (Page 290)	N4G2R-Q □ - □																															
	N4G2R-Q □ - □																															
	N4G2R-Q □ - □																															
Partition block (Page 291)	N4G2R-S □																															
	N4G2R-S □																															
	N4G2R-S □																															
End block (Page 291)	N4G2R-E □																															
	N4G2R-E □																															

Mounting rail	L_2= □ * Write an integer multiple of 12.5. (How to determine the length page 308)	Blanking plug				Silencer		Tag plate (attachment)		Accessory
		GWP4-B	□	GWP8-B	□	SLW-H8	□	B	□	
		GWP6-B	□	GWP10-B	□	SLW-H10	□			
		Cable with D sub-connector		4GR-CABLE-D0□-□		□				

MN4GA1/2 Mix manifold specifications sheet

● Contact ● Quantity Set ● Delivery date /

Slip No. | Order No.

Issued / /

Company

Contact

Order No.

● Manifold model No.

MN ☐ GAX12R- ☐ - ☐ ☐ ☐ - ☐ - ☐

Ⓐ Model No. Ⓒ Port size Ⓓ Electrical connections (Reduced wiring connection) Ⓔ Terminal/connector pin array (Note: Fill in for reduced wiring.) Ⓕ Option Ⓖ Station No. Ⓗ Voltage

When filling in this field, select the model No. from "Block configurations" (pages 287 to 305).

Part name (Page)	Model No.	Layout position 1	2	3	4	5	6	7	8	9	10	11	12	13	14	15	16	17	18	19	20	21	22	23	24	25	26	27	28	29	30	Quantity
Wiring block (pages 292, 293)	N4G ☐ R-T ☐																															
Valve block with solenoid valve (page 288)	N4GA ☐ 0R- ☐																															
	N4GA ☐ 0R- ☐																															
	N4GA ☐ 0R- ☐																															
	N4GA ☐ 0R- ☐																															
	N4GA ☐ 0R- ☐																															
	N4GA ☐ 0R- ☐																															
	N3GA ☐ 0R- ☐																															
	N3GA ☐ 0R- ☐																															
Valve block with masking plate (page 288)	N4GA ☐ R-MP																															
	N4GA ☐ R-MPS																															
	N4GA ☐ R-MPD																															
Air supply spacer (page 297)	4G1R-P- ☐																															
	4G2R-P- ☐																															
Exhaust spacer (Page 299)	4G1R-R- ☐																															
	4G2R-R- ☐																															
In-stop valve spacer (Page 301)	4G1R-IS																															
	4G2R-IS																															
Mixed block (Page 291)	N4G12R-MIX																															
Supply and exhaust block (page 290)	N4G ☐ R-Q ☐ - ☐																															
	N4G ☐ R-Q ☐ - ☐																															
	N4G ☐ R-Q ☐ - ☐																															
Partition block (page 291)	N4G ☐ R-S ☐																															
	N4G ☐ R-S ☐																															
	N4G ☐ R-S ☐																															
End block (page 291)	N4G ☐ R-E ☐																															
	N4G ☐ R-E ☐																															

Mounting rail

L_2= ☐

* Write an integer multiple of 12.5.

(How to determine the length page 308)

Blanking plug

PG-P2-B		GWP ☐ -B		GWP ☐ -B	
GWP ☐ -B		GWP ☐ -B			

Silencer

SLW-H ☐ SLW-H ☐

Cable with D sub-connector 4GR-CABLE-D0☐-☐

Push-in fitting tube remover (attached as standard) ☐ Not required (check the box)

Accessory

MN4GB1/2 Mix manifold specifications sheet

● Contact ● Quantity Set ● Delivery date /

Slip No. | Order No.

Issued / /

Company

Contact

Order No.

● Manifold model No.

MN4GBX12R- ☐ - ☐ ☐ ☐ - ☐ - ☐

Ⓐ Model No. Ⓒ Port size Ⓓ Electrical connections Ⓔ Terminal/connector Ⓕ Option Ⓖ Station No. Ⓗ Voltage

When filling in this field, select the model No. from "Block configurations" (pages 287 to 305). (Reduced wiring connection) pin array (Note: Fill in for reduced wiring.)

Part name	Model No.	Layout position 1	2	3	4	5	6	7	8	9	10	11	12	13	14	15	16	17	18	19	20	21	22	23	24	25	26	27	28	29	30	Quantity
Wiring block (pages 292, 293)	N4G ☐ R-T ☐																															
Valve block with solenoid valve (page 288)	N4GB ☐ 0R- ☐ - ☐																															
	N4GB ☐ 0R- ☐ - ☐																															
	N4GB ☐ 0R- ☐ - ☐																															
	N4GB ☐ 0R- ☐ - ☐																															
	N4GB ☐ 0R- ☐ - ☐																															
	N4GB ☐ 0R- ☐ - ☐																															
	N3GB ☐ 0R- ☐ - ☐																															
	N3GB ☐ 0R- ☐ - ☐																															
Valve block with masking plate (page 288)	N4GB ☐ R-MP- ☐																															
	N4GB ☐ R-MPS- ☐																															
	N4GB ☐ R-MPD- ☐																															
Air supply spacer (page 297)	4G1R-P- ☐																															
	4G2R-P- ☐																															
Exhaust spacer (Page 299)	4G1R-R- ☐																															
	4G2R-R- ☐																															
In-stop valve spacer (Page 301)	4G1R-IS																															
	4G2R-IS																															
Mixed block (Page 291)	N4G12R-MIX																															
Supply and exhaust block (page 290)	N4G ☐ R-Q ☐ - ☐																															
	N4G ☐ R-Q ☐ - ☐																															
	N4G ☐ R-Q ☐ - ☐																															
Partition block (page 291)	N4G ☐ R-S ☐																															
	N4G ☐ R-S ☐																															
	N4G ☐ R-S ☐																															
End block (page 291)	N4G ☐ R-E ☐																															
	N4G ☐ R-E ☐																															

Mounting rail	Blanking plug						Silencer				Accessory
L_2= ☐	PG-P2-B ☐		GWP ☐ -B ☐		GWP ☐ -B ☐		SLW-H ☐		SLW-H ☐		
* Write an integer multiple of 12.5.	GWP ☐ -B ☐		GWP ☐ -B ☐								
(How to determine the length page 308)	Cable with D sub-connector		4GR-CABLE-D0☐-☐			Push-in fitting tube remover (attached as standard) ☐ Not required (check the box)					

Common terminal block (T10/T11) wiring specifications sheet

* Fill in and attach to the manifold specifications sheet for anything other than the standard wiring or double wiring. (Available as a custom order)
* Not required with standard wiring/double wiring.

Connector pin No.		Valve No.																							
T10 ☐	**T11** ☐	1	2	3	4	5	6	7	8	9	10	11	12	13	14	15	16	17	18	19	20	21	22	23	24
1	1																								
2	2																								
3	3																								
4	4																								
5	5																								
6	6																								
7	7																								
8	8																								
9	9																								
10	10																								
11	11																								
12	12																								
13	13																								
14	14																								
15	15																								
16	16																								
COM	17																								
COM	18																								
	19																								
	20																								
	21																								
	22																								
	23																								
	24																								
	COM																								
	COM																								

D sub-connector (T30) wiring specifications sheet

* Fill in and attach to the manifold specifications sheet for anything other than the standard wiring or double wiring. (Available as a custom order)
* Not required with standard wiring/double wiring.

Connector pin No.	Valve No.																								
T30 ☐	1	2	3	4	5	6	7	8	9	10	11	12	13	14	15	16	17	18	19	20	21	22	23	24
1																								
14																								
2																								
15																								
3																								
16																								
4																								
17																								
5																								
18																								
6																								
19																								
7																								
20																								
8																								
21																								
9																								
22																								
10																								
23																								
11																								
24																								
12																								
25																								
13(COM)																								

Flat cable connector (T50/T51/T52/T53) wiring specifications sheet

* Fill in and attach to the manifold specifications sheet for anything other than the standard wiring or double wiring. (Available as a custom order)
* Not required with standard wiring/double wiring.

Connector pin No.				Valve No.																							
T50/T50R	**T51/T51R**	**T52/T52R**	**T53/T53R**	1	2	3	4	5	6	7	8	9	10	11	12	13	14	15	16	17	18	19	20	21	22	23	24
1	1	1	1																								
2	2	2	2																								
3	3	3	3																								
4	4	4	4																								
5	5	5	5																								
6	6	6	6																								
7	7	7	7																								
8	8	8	8																								
9 - Power supply	9	9 COM	9																								
10 + (COM) Power supply	10	10 COM	10																								
11	11		11																								
12	12		12																								
13	13		13																								
14	14		14																								
15	15		15																								
16	16		16																								
17	17		17																								
18	18		18																								
19 - Power supply	19 COM		19																								
20 + (COM) Power supply	20 COM		20																								
			21																								
			22																								
			23																								
			24																								
			25 COM																								
			26 COM																								

*: Note that when the wiring method is T50/T50R, the COM polarity will be + (positive).

Serial transmission (T6G1/T7*) wiring specifications sheet

* Fill in and attach to the manifold specifications sheet for anything other than the standard wiring or double wiring. (Available as a custom order)
* Not required with standard wiring/double wiring.

Serial transmission	Connector pin No.		Valve No.														
	T6G1	**T7***	1	2	3	4	5	6	7	8	9	10	11	12	13	14	15	16
Connector connection T6G1: CC-Link 16 points	1	1																
	2	2																
	3	3																
	4	4																
	5	5																
	6	6																
	7	7																
	8	8																
	9	9																
	10 COM	10																
	11	11																
	12	12																
Thin slot-insertion type T7D1: DeviceNet 16 points T7G1: CC-Link 16 points T7L1: SAVE NET 16 points T7S1: CompoNet 16 points (NPN) T7SP1: CompoNet 16 points (PNP)	13	13																
	14	14																
	15	15																
	16	16																
	17	17																
	18	18																
	19	19																
	20 COM	20																

Serial transmission (T8*) wiring specifications sheet

* Fill in and attach to the manifold specifications sheet for anything other than the standard wiring or double wiring. (Available as a custom order)
* Not required with standard wiring/double wiring.

Serial transmission			
T8G1	CC-Link	NPN	16 points
T8G2			32 points
T8GP1		PNP	16 points
T8GP2			32 points
T8P1	PROFIBUS-DP	NPN	16 points
T8P2			32 points
T8PP1		PNP	16 points
T8PP2			32 points
T8EC1	EtherCAT	NPN	16 points
T8EC2			32 points
T8ECP1		PNP	16 points
T8ECP2			32 points
T8EN1	EtherNet/IP	NPN	16 points
T8EN2			32 points
T8ENP1		PNP	16 points
T8ENP2			32 points
T8D1	DeviceNet	NPN	16 points
T8D2			32 points
T8DP1		PNP	16 points
T8DP2			32 points
T8EB1	CC-Link IEF Basic	NPN	16 points
T8EB2			32 points
T8EBP1		PNP	16 points
T8EBP2			32 points
T8EP1	PROFINET	NPN	16 points
T8EP2			32 points
T8EPP1		PNP	16 points
T8EPP2			32 points

Connector pin No.	Valve No.																							
T8*	1	2	3	4	5	6	7	8	9	10	11	12	13	14	15	16	17	18	19	20	21	22	23	24
1																								
2																								
3																								
4																								
5																								
6																								
7																								
8																								
9																								
10																								
11																								
12																								
13																								
14																								
15																								
16																								
17																								
18																								
19																								
20																								
21																								
22																								
23																								
24																								
25																								
26																								
27																								
28																								
29																								
30																								
31																								
32																								

MEMO

MEMO

4GA/4GB/M4GA/4GB

Pilot operated 3, 5-port valve

Master valve

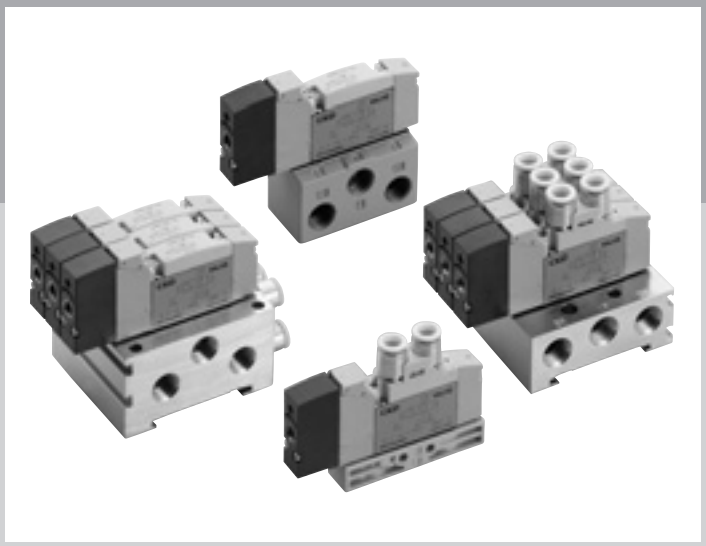

CONTENTS

Series variation 322

Discrete valve

- Body piping (3GA1 to 3/4GA1 to 3) 324
- Base piping (4GB1 to 3) 334

Manifold (built-in base)

- Body piping (M4GA1 to 3) 324
- Base piping (M4GB1 to 3) 334

Manifold specifications sheet 343

Technical data

(1) Pneumatic system selection guide 844

(2) Exhaust check valve 851

⚠ Safety precautions 850

Series external appearance				Model No.	Position No. of pilot ports JIS symbol	Valve performance: Flow characteristics C ($dm^3/(s \cdot bar)$)	Valve performance: Cylinder bore size(ø)	Switching position: 3-port Normally closed	Switching position: 3-port Normally open	Switching position: Single	Switching position: Double	Switching position: All ports closed	Switching position: ABR connection
Single unit	4GA / 4GB 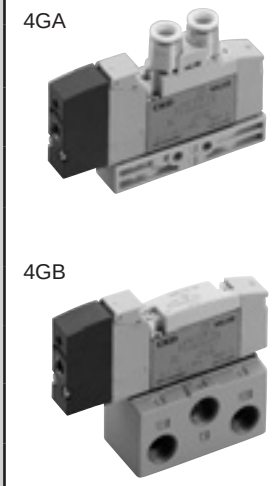	Body piping	3-port	3GA1	● 3-port valve 2-position single NC 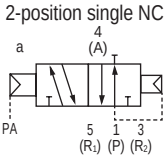	0.70	20 to 40	●	●				
				3GA2		2.7	40 to 80	●	●				
				3GA3		3.9	63 to 100	●	●				
			5-port	4GA1	2-position single NO 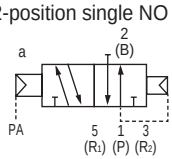	0.66 to 0.70	20 to 40			●	●	●	●
				4GA2		2.4 to 2.7	40 to 80			●	●	●	●
				4GA3		3.2 to 4.0	63 to 100			●	●	●	●
		Base piping	5-port	4GB1	● 5-port valve 2 position single 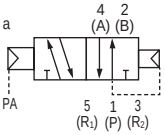	1.1 to 1.3	20 to 40			●	●	●	●
				4GB2		2.2 to 2.5	40 to 80			●	●	●	●
				4GB3		3.2 to 4.2	63 to 100			●	●	●	●
Manifold (metal base)	M4GA / M4GB 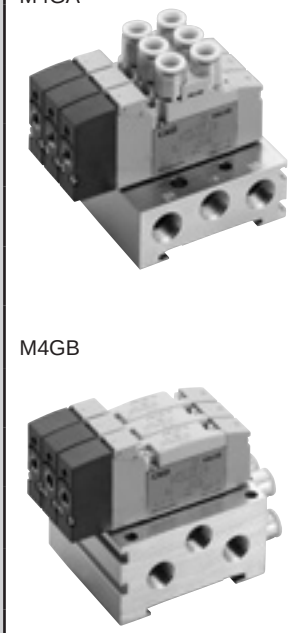	Body piping	Direct mount	M4GA1	2-position double 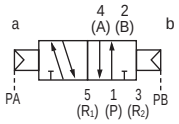	0.7 to 1.0	20 to 40						
				M4GA2		1.7 to 2.5	40 to 80	●	●	●	●	●	●
				M4GA3		2.5 to 3.3	63 to 100						
			DIN rail mount (-D)	M4GA1	3-position All ports closed 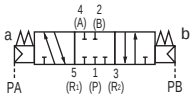	0.7 to 1.0	20 to 40						
				M4GA2		1.7 to 2.5	40 to 80	●	●	●	●	●	●
				M4GA3		2.5 to 3.3	63 to 100						
		Base piping	Direct mount	M4GB1	3-position A/B/R connection 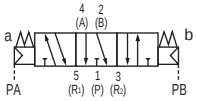	0.68 to 1.0	20 to 40						
				M4GB2		1.7 to 2.4	40 to 80			●	●	●	●
				M4GB3		2.6 to 3.3	63 to 100						
			DIN rail mount (-D)	M4GB1	3-position P/A/B connection 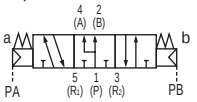	0.68 to 1.0	20 to 40						
				M4GB2		1.7 to 2.4	40 to 80			●	●	●	●
				M4GB3		2.6 to 3.3	63 to 100						

*1: Effective cross-sectional area S and sonic conductance C are converted as S ≈ 5.0 x C.
*2: P/R piping port is NPT thread.
*3: P/R piping port is G thread.
*4: "○" indicates made to order.

Switching position		Port A/B connection port												A/B piping port (*2, *4)								A/B piping port (*3)								Page
		Push-in fitting				Push-in L fitting (facing upward)				Female thread				Push-in fitting					Female thread			Push-in fitting				Female thread				
PAB connection	Mix	ø4	ø6	ø8	ø10	ø4	ø6	ø8	ø10	M5	Rc 1/8	Rc 1/4	Rc 3/8	ø1/ 8 Inching	ø5/ 32 Inching	ø1/ 4 Inching	ø5/ 16 Inching	ø3/ 8 Inching	M5	NPT1/8	NPT1/4	NPT3/8	ø4	ø6	ø8	ø10	M5	G 1/8	G 1/4	G 3/8	
		C4	C6	C8	C10	CL4	CL6	CL8	CL10	M5	06	08	10	C3N	C4N	C6N	C8N	C10N	M5N	06 N	08 N	10 N	C4G	C6G	C8G	C10G	M5G	06G	08G	10G	
		●	●							●				●	●															324
		●	●	●							●					●	●			●			●	●	●			●		
			●	●	●							●					○	○			○				●	●				●	
●		●	●							●				●	●															
●		●	●	●							●					●	●			●			●	●	●			●		
●			●	●	●							●					○	○			○				●	●				●	
●											●									●								●			334
●												●									●			●					●		
●												●	●								○	○							●	●	
		●	●							●				●	●				●				●	●			●				324
●	●	●	●	●							●					●	●			●			●	●	●			●		
			●	●	●							●					●	●			●				●	●				●	
		●	●							●				●	●				●				●	●			●				
●	●	●	●	●							●					●	●			●			●	●	●			●		
			●	●	●							●					●	●			●				●	●				●	
		●	●			●	●			●				●	●				●				●	●			●				334
●	●	●	●	●			●	●			●					●	●			●			●	●	●			●		
			●	●	●			●	●			●					●	●			●				●	●				●	
		●	●			●	●			●				●	●				●				●	●			●				
●	●	●	●	●			●	●			●					●	●			●			●	●	●			●		
			●	●	●			●	●			●					●	●			●				●	●				●	

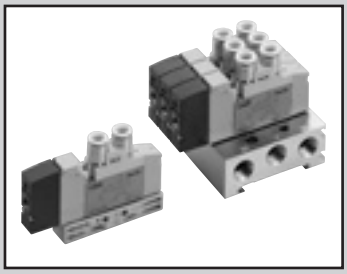

Master valve single unit/manifold (metal base)
Body piping

(M)3GA1/2/3 / (M)4GA1/2/3 Series

● Applicable cylinder bore size: ø20 to ø100

RoHS CAD

JIS symbol

● 3-port valve
2-position single NC

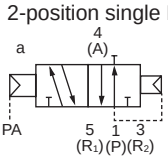

2-position single NO

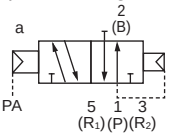

● 5-port valve
2-position single

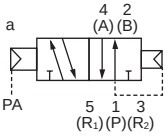

2-position double

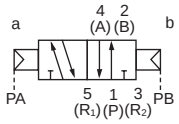

3-position
All ports closed

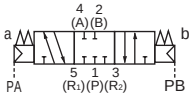

3-position A/B/R connection

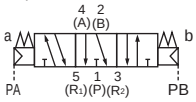

3-position P/A/B connection

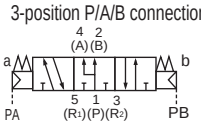

Common specifications

1 MPa ≈ 145.0 psi, 1 MPa = 10 bar

Item		Description
Valve and operation		Pilot operated soft spool valve
Working fluid		Compressed air
Max. working pressure	MPa	0.7 (≈101 psi, 7 bar)
Min. working pressure *1	MPa	Refer to main pressure section in the table below
Proof pressure	MPa	1.05 (≈152 psi, 10 bar)
Ambient temperature	°C	-5 (23°F) to 55 (131°F) (no freezing)
Fluid temperature	°C	5 (41°F) to 55 (131°F)
Manual override		Non-locking/locking common
Pilot exhaust method (manual operation)		Main valve/pilot valve common exhaust
Lubrication	*2	Not required
Vibration resistance	m/s^2	50 or less
Shock resistance	m/s^2	300 or less
Atmosphere		Cannot be used in corrosive gas environments

*1: When operating manually, supply pressure to port P as shown in the table below is required.
2-position 0.1 MPa and over
3-position 0.2 MPa and over

*2: Use turbine oil Class 1 ISO VG32 for lubrication.
Excessive or intermittent lubrication results in unstable operation.

Individual specifications

Body piping (discrete/manifold)

No. of ports	Model No.		Solenoid position	Pilot port PA/PB	Main pressure	Pilot signal pressure MPa	Other specifications Page *
	Single unit	Manifold					
3-port	3GA1**1R	M3GA1**1R	2-position single NC/NO	M5	0.2 to 0.7	(0.6 × main pressure + 0.06) to 0.7	Single unit: Page 12 Manifold: Page 96
	3GA2**1R	M3GA2**1R					
	3GA3**1R	M3GA3**1R					
5-port	4GA111R	M4GA111R	2-position single	M5	0.2 to 0.7	(0.6 × main pressure + 0.06) to 0.7	
	4GA121R	M4GA121R	2-position double		0 to 0.7	0.2 to 0.7	
	4GA1$\frac{3}{5}$1R	M4GA1$\frac{3}{5}$1R	3-position				
	4GA211R	M4GA211R	2-position single	M5	0.2 to 0.7	(0.6 × main pressure + 0.06) to 0.7	
	4GA221R	M4GA221R	2-position double		0 to 0.7	0.2 to 0.7	
	4GA2$\frac{3}{5}$1R	M4GA2$\frac{3}{5}$1R	3-position				
	4GA311R	M4GA311R	2-position single	M5	0.2 to 0.7	(0.6 × main pressure + 0.06) to 0.7	
	4GA321R	M4GA321R	2-position double		0 to 0.7	0.2 to 0.7	
	4GA3$\frac{3}{5}$1R	M4GA3$\frac{3}{5}$1R	3-position				

* Other specifications are the same as those of 4G Series. Refer to pages for each specification.

How to order

Single master valve

4GA2 1 1R - C4 - H

Ⓐ Model No.
Ⓑ Solenoid position
Ⓒ Port size
Ⓓ Option

Code	Description	Ⓐ Model No. 3GA1	3GA2	3GA3	4GA1	4GA2	4GA3
Ⓑ Solenoid position							
1	2 position single				●	●	●
2	2-position double				●	●	●
3	3-position all ports closed				●	●	●
4	3-position ABR connection				●	●	●
5	3-position PAB connection				●	●	●
1	2-position single: normally closed (*1)	●	●	●			
11	2-position single: normally open (*1)	●	●	●			
Ⓒ Port size							
Port	A/BPort	P/R1/Port R2 ①=M5 ②= Rc1/8 ③=Rc1/4					
C4	ø4 push-in fitting	①	②		①	②	
C6	ø6 push-in fitting	①	②	③	①	②	③
C8	ø8 push-in fitting		②	③		②	③
C10	ø10 push-in fitting			③			③
M5	M5	①			①		
06	Rc1/8		②			②	
08	Rc1/4			③			③
Port	4(A)/2(B) port	Port P/R1/R2 (1)=M5 (5)=1/8NPT (6)=Rc1/4NPT					
C3N	ø1/8" push-in fitting	①			①		
C4N	ø5/32" push-in fitting	①			①		
C6N	ø1/4" push-in fitting		⑤			⑤	
C8N	ø5/16" push-in fitting (*5)		⑤	⑥		⑤	⑥
C10N	ø3/8" push-in fitting (*5)			⑥			⑥
06 N	NPT1/8		⑤			⑤	
08 N	NPT1/4 (*5)			⑥			⑥
Port	4(A)/2(B) port	Port P/R1/R2 ⑧=G1/8 ⑨=G1/4					
C4G	ø4 push-in fitting		⑧			⑧	
C6G	ø6 push-in fitting		⑧			⑧	
C8G	ø8 push-in fitting		⑧	⑨		⑧	⑨
C10G	ø10 push-in fitting			⑨			⑨
06G	G1/8		⑧			⑧	
08G	G1/4			⑨			⑨
Ⓓ Option							
Blank	No	●	●	●	●	●	●
H	With exhaust check valve (*2)	●	●	●	●	●	●
P	With mounting plate (*3)	●	●	●	●	●	●
A	Ozone/coolant proof product	●	●	●	●	●	●
F	Port A/B filter built in (*4)	●	●	●	●	●	●

is not available.

⚠ Precautions for model No. selection

*1 For the 3G A normally closed, the piping connection 2 (B) and 3 (R2) ports are plugged. For 3GA normally open type, avoid plugging the 5 (R1) port. This may cause malfunction.

***2 3-position all ports closed and P A B connection are not provided with the exhaust check valve specifications (H). Refer to page 851 for details on the exhaust check valve.**

3 For option code P, that normal mounting is not possible because of the pilot port direction.

*4 A filter is built into port P as standard.

*5 4G3 is a made-to-order product.

How to order

Manifold

M 4GA2 1 1R - C4 - H D - 8

Discrete master valve for manifold (gasket, mounting screw, PR check valve attached)

4GA2 1 8R - C4 - H

- A Model No.
- B Solenoid position
- C Port size
- D Option
- E Mount type
- F Station No.

Code	Description	A Model No. M3GA1	M3GA2	M3GA3	M4GA1	M4GA2	M4GA3
B Solenoid position							
1	2 position single				●	●	●
2	2-position double				●	●	●
3	3-position all ports closed				●	●	●
4	3-position ABR connection				●	●	●
5	3-position PAB connection				●	●	●
1	2-position single normally closed	●	●	●			
11	2-position single normally open	●	●	●			
8	Mix manifold(for multiple solenoid positions)	●	●	●	●	●	●
C Port size							
Port	Port A/B	P/R1/Port R2 ②= Rc1/8 ③=Rc1/4 ④=Rc3/8					
C4	ø4 push-in fitting	②	③		②	③	
C6	ø6 push-in fitting	②	③	④	②	③	④
C8	ø8 push-in fitting		③	④		③	④
C10	ø10 push-in fitting			④			④
CX	Push-in fitting mix (*1)	②	③	④	②	③	④
M5	M5	②			②		
06	Rc1/8		③			③	
08	Rc1/4			④			④
Port	4(A)/2(B) port	Port P/R1/R2 ⑤=1/8NPT ⑥=1/4NPT ⑦=3/8NPT					
C3N	ø1/8" push-in fitting	⑤			⑤		
C4N	ø5/32" push-in fitting	⑤			⑤		
C6N	ø1/4" push-in fitting		⑥			⑥	
C8N	ø5/16" push-in fitting		⑥	⑦		⑥	⑦
C10N	ø3/8" push-in fitting			⑦			⑦
CXN	Push-in fitting mix (*1)	⑤	⑥	⑦	⑤	⑥	⑦
M5N	M5	⑤			⑤		
06 N	NPT1/8		⑥			⑥	
08 N	NPT1/4 (*6))			⑦			⑦
Port	4(A)/2(B) port	Port P/R1/R2 ⑧=G1/8 ⑨=G1/4 ⑩=G3/8					
C4G	ø4 push-in fitting	⑧	⑨		⑧	⑨	
C6G	ø6 push-in fitting	⑧	⑨		⑧	⑨	
C8G	ø8 push-in fitting		⑨	⑩		⑨	⑩
C10G	ø10 push-in fitting			⑩			⑩
CXG	Push-in fitting mix (*1)	⑧	⑨	⑩	⑧	⑨	⑩
M5G	M5	⑧			⑧		
06G	G1/8		⑨			⑨	
08G	G1/4			⑩			⑩
D Option							
Blank	No	●	●	●	●	●	●
H	With exhaust check valve (*2)	●	●	●	●	●	●
A	Ozone/Coolant proof	●	●	●	●	●	●
F	Port A/B filter built in (*3)	●	●	●	●	●	●
Z1	Air supply spacer (*4)(*5)	●	●	●	●	●	●
Z2	In-stop valve spacer (*4))(*5)	●	●	●	●	●	●
Z3	Exhaust spacer (*4)(*5)	●	●	●	●	●	●
E Mount type							
Blank	Direct mount	●	●	●	●	●	●
D	DIN rail mount	●	●	●	●	●	●
F Station No.							
2	2 stations	●	●	●	●	●	●
to	to						
20	Refer to page 96 for the max. station No. per model.						

Precautions for model No. selection

*1 : The push-in fitting cannot be mixed with the discrete valve's 4(A) or 2(B) port.

*2 : 3-position all ports closed and PAB connection are not provided with the exhaust check valve specifications (H). Refer to page 851 for details on the exhaust check valve.

*3 : A filter is built into port P as standard.

*4 : Specify the spacer mounting position and quantity on the manifold specifications sheet. Stacking of spacers is not possible. Combination with the masking plate is not supported. For details, refer to page 188 to page 192.

*5 : Not available with the discrete master valve for manifold.

*6 : Made-to-order product.

is not available.

Dimensions CAD

3GA111R

● 2-position single normally closed

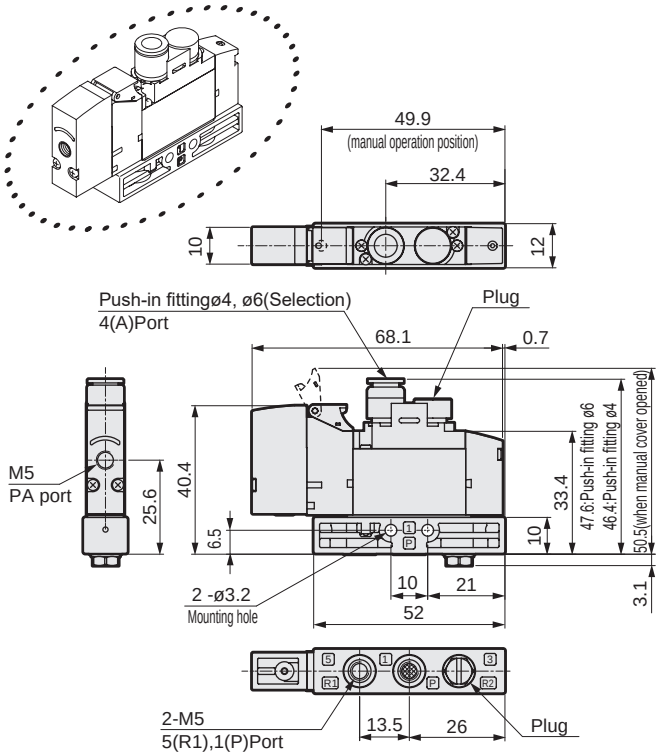

3GA1111R

● 2-position single normally open

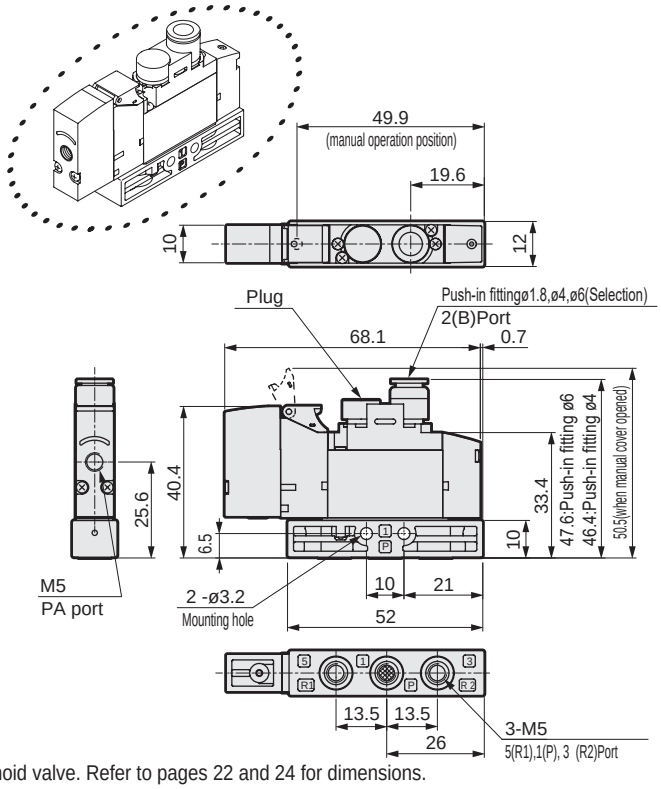

* The mounting plate (P) is the same as that of the solenoid valve. Refer to pages 22 and 24 for dimensions.
* For M5 thread dimensions, refer to pages 22 and 24.
* For NPT and G thread specifications, refer to the solenoid valve dimensions on pages 52 to 59.

3GA211R

● 2-position single normally closed

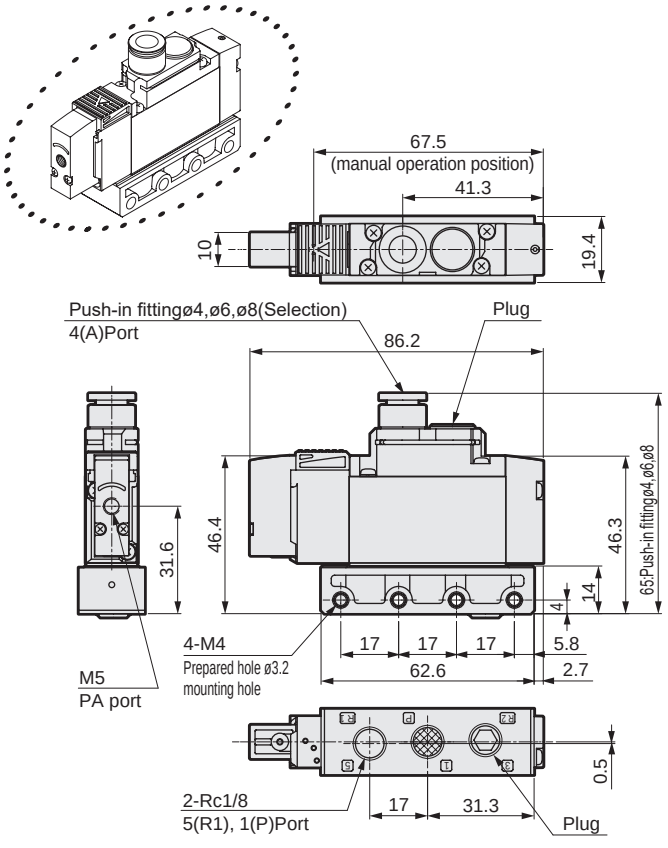

3GA2111R

● 2-position single normally open

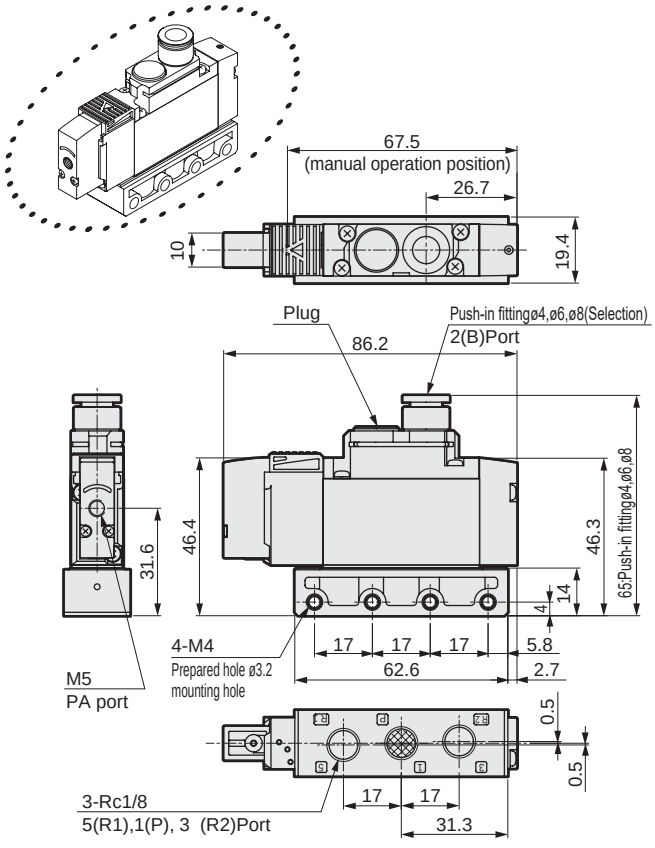

* The mounting plate (P) is the same as that of the solenoid valve. Refer to pages 26 and 28 for dimensions.
* For Rc1/8 thread (06) dimensions, refer to pages 26 and 28.
* For NPT and G thread specifications, refer to the solenoid valve dimensions on pages 52 to 59.
* Refer to page 853 for mounting hole details.

Dimensions CAD

3GA311R

● 2-position single normally closed

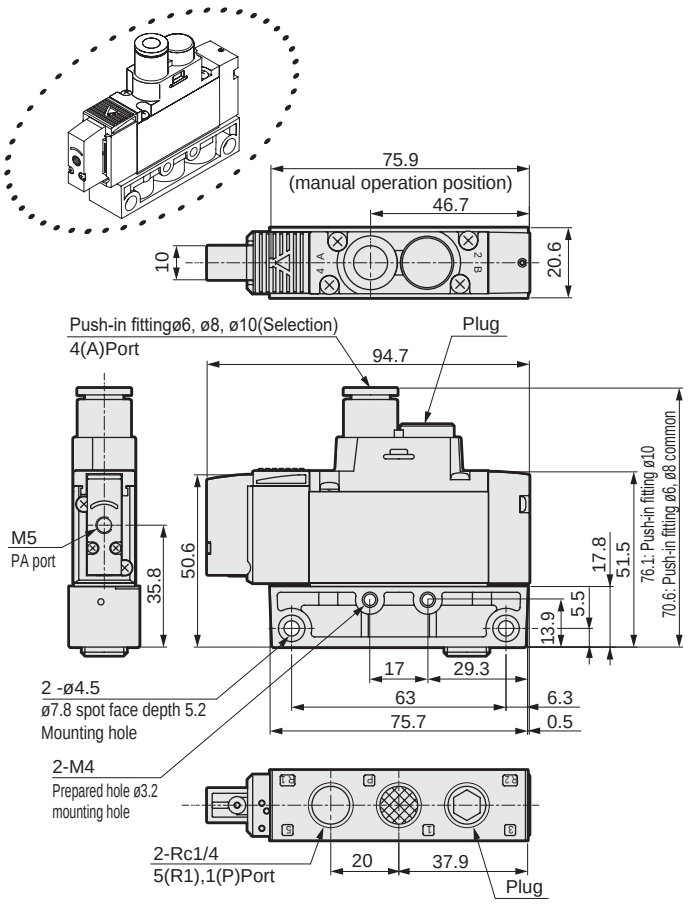

3GA3111R

● 2-position single normally open

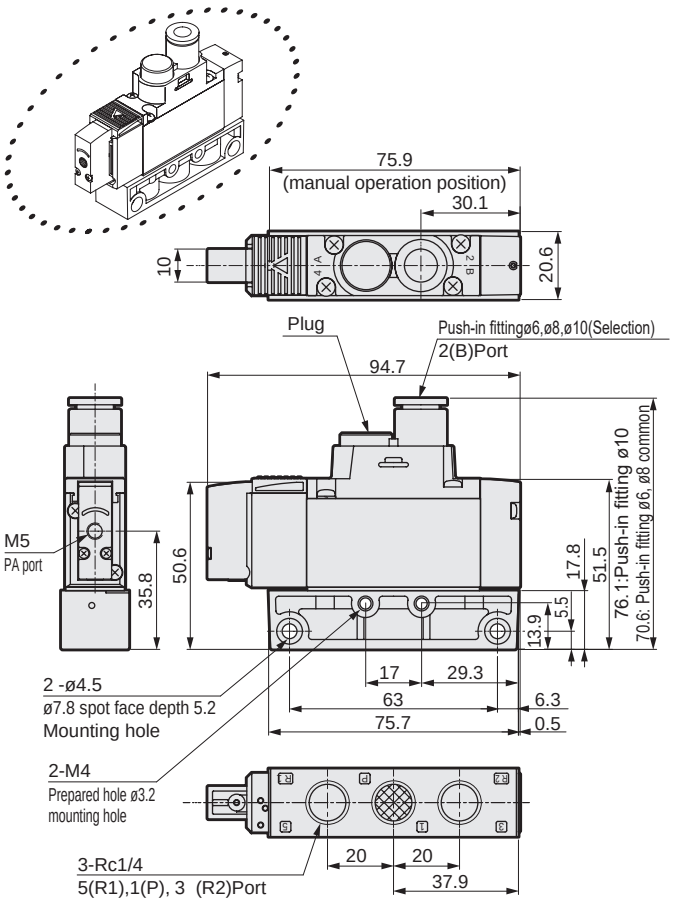

* The mounting plate (P) is the same as that of the solenoid valve. Refer to pages 30 and 32 for dimensions.
* For Rc1/4 thread (08) dimensions, refer to pages 30 and 32.
* For NPT and G thread specifications, refer to the solenoid valve dimensions on pages 52 to 59.

Dimensions CAD

4GA111R

● 2-position single

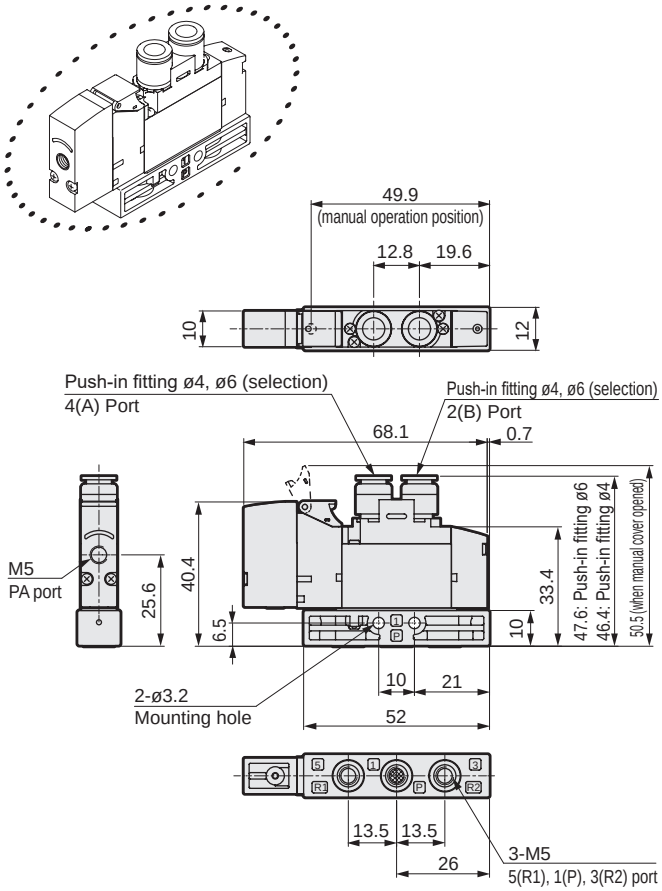

4GA121R

● 2-position double

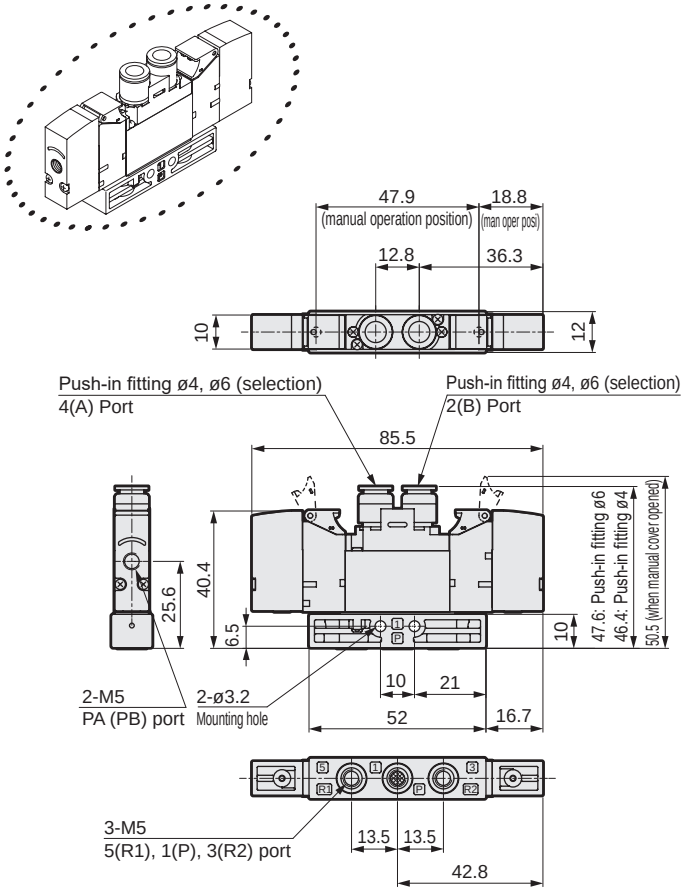

4GA1$^{3}_{5}$1R

● 3-position

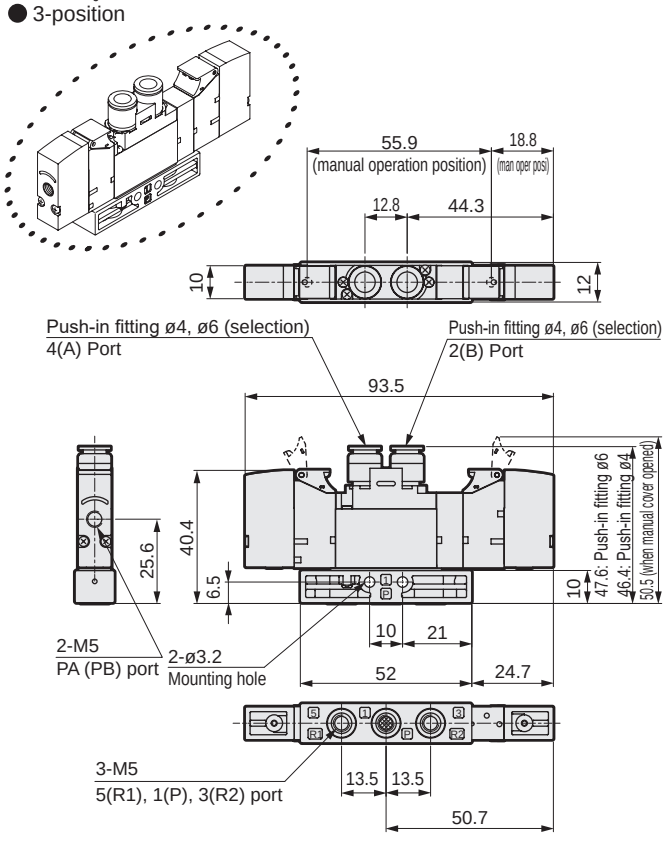

* The mounting plate (P) is the same as that of the solenoid valve. Refer to pages 34, 36 and 38 for dimensions.
* For M5 thread dimensions, refer to pages 34, 36, and 38.
* For NPT and G thread specifications, refer to the solenoid valve dimensions on pages 52 to 59.

Dimensions CAD

4GA211R

● 2 position single

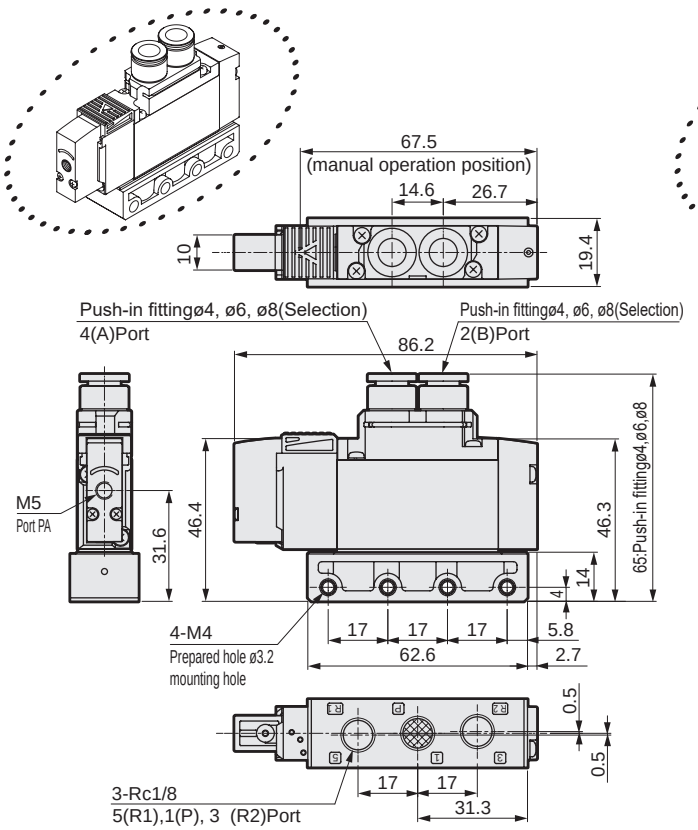

4GA221R

● 2-position double

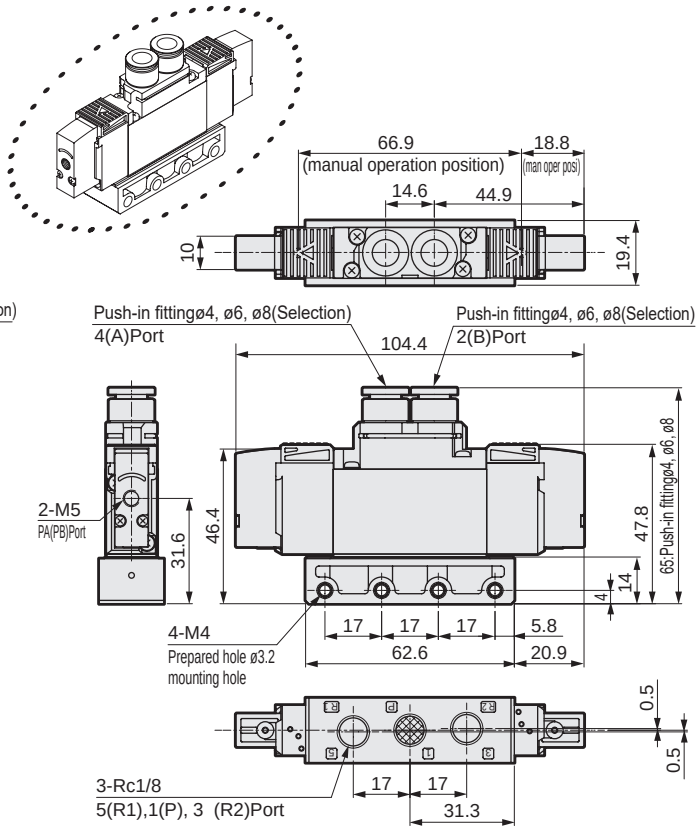

4GA2$^{3}_{4}_{5}$1R

● 3-position

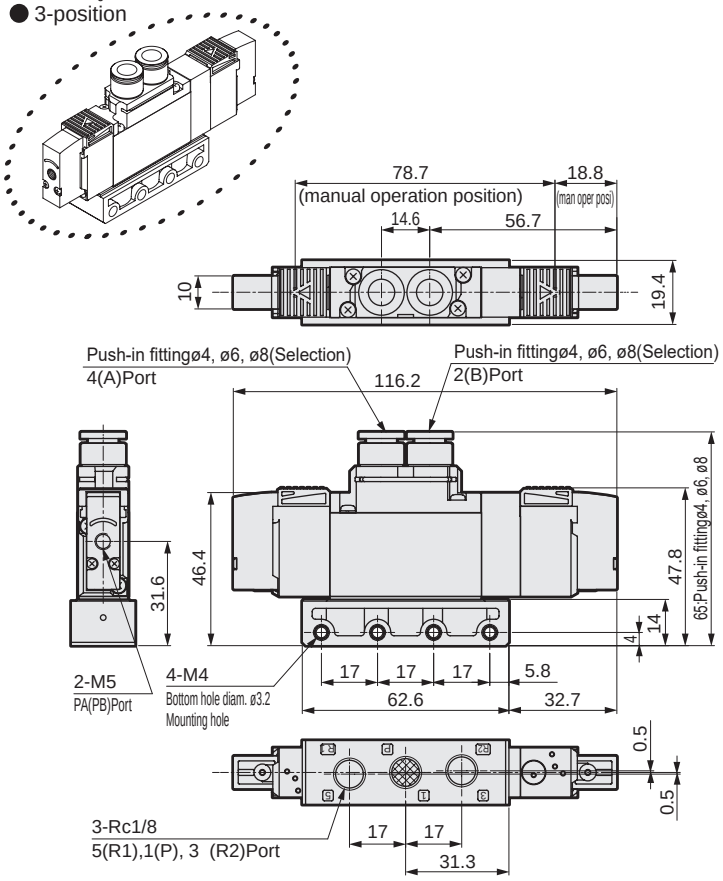

* The mounting plate (P) is the same as that of the solenoid valve. Refer to pages 40, 42 and 44 for dimensions.
* For Rc1/8 thread (06) dimensions, refer to pages 40, 42, and 44.
* For NPT and G thread specifications, refer to the solenoid valve dimensions on pages 52 to 59.
* Refer to page 853 for mounting hole details.

Dimensions CAD

4GA311R

● 2 position single

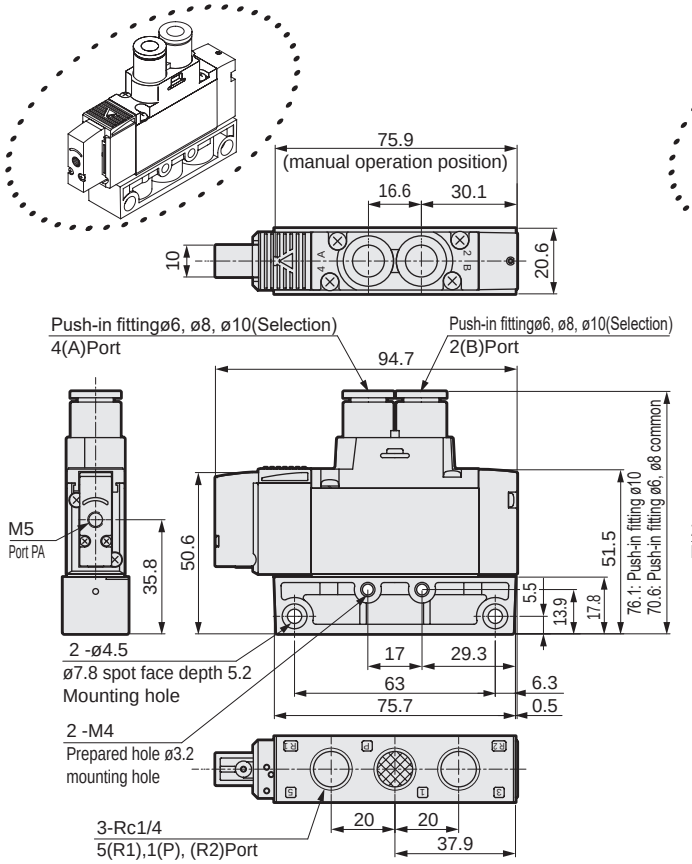

4GA321R

● 2-position double

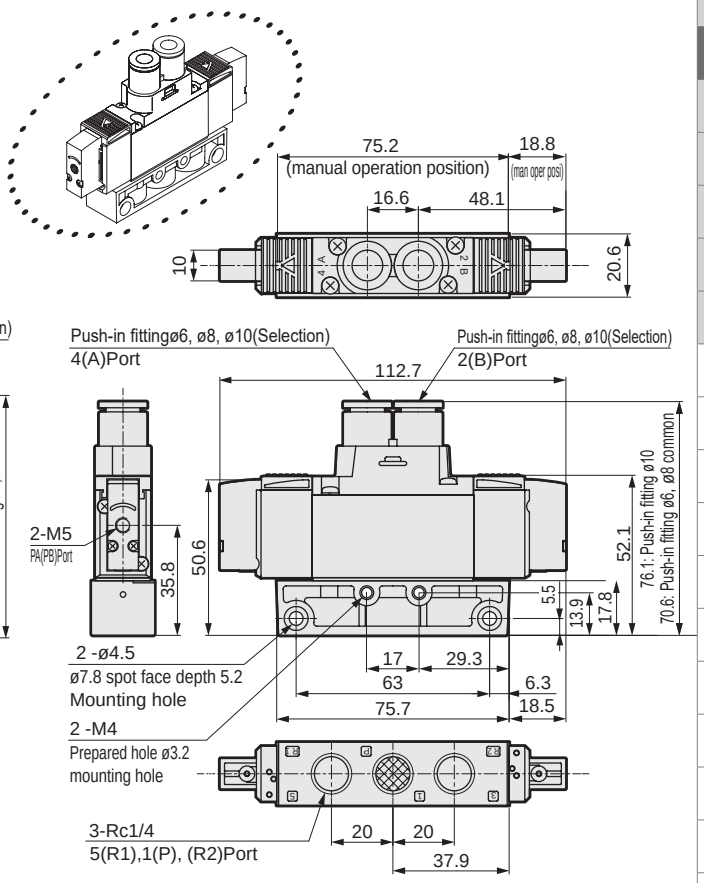

4GA3$^{3}_{4}_{5}$1R

● 3-position

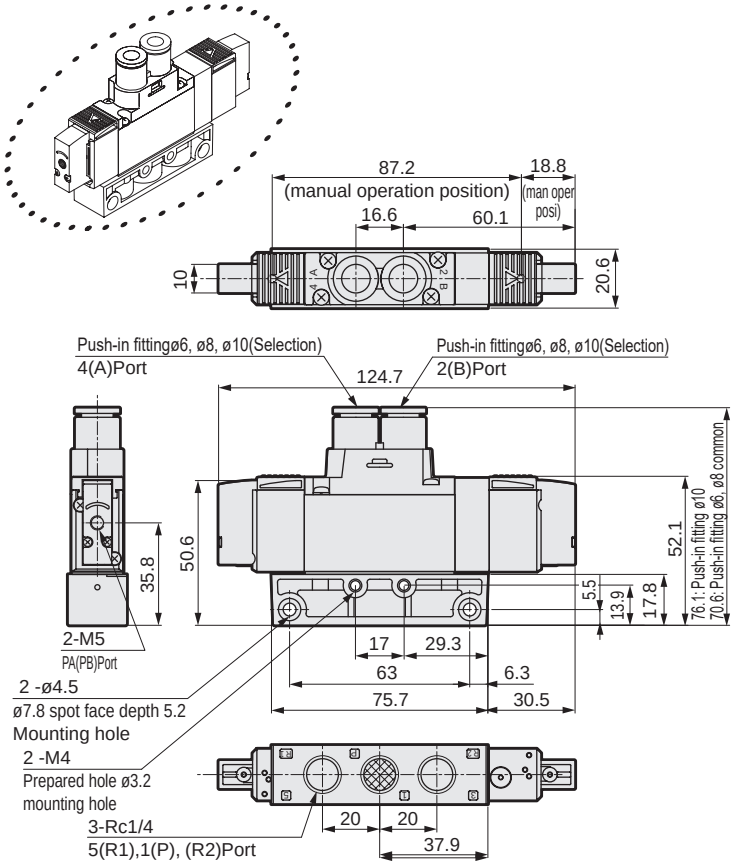

* The mounting plate (P) is the same as that of the solenoid valve. Refer to pages 46, 48 and 50 for dimensions.
* For Rc1/4 thread (08) dimensions, refer to pages 46, 48, and 50.
* For NPT and G thread specifications, refer to the solenoid valve dimensions on pages 52 to 59.
* Refer to page 853 for mounting hole details.

Dimensions CAD

M4GA1

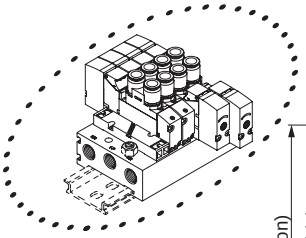

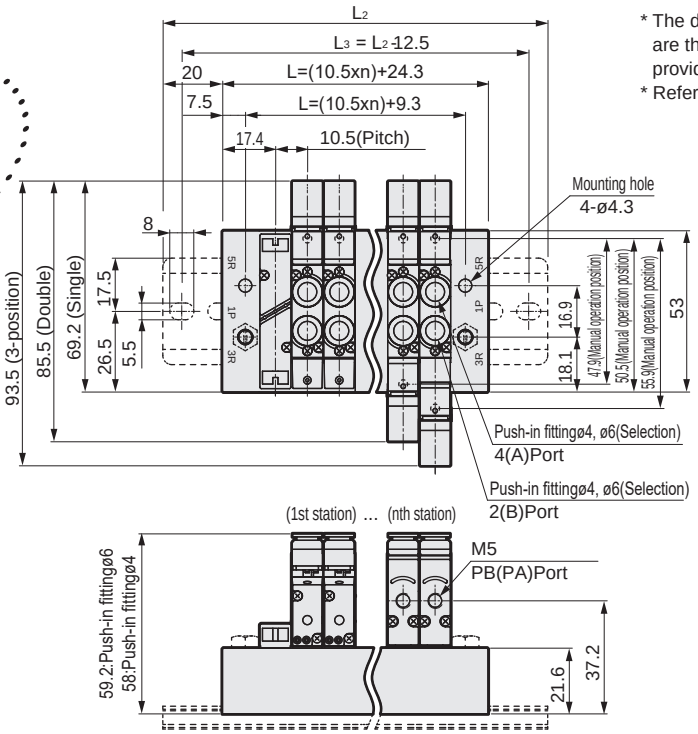

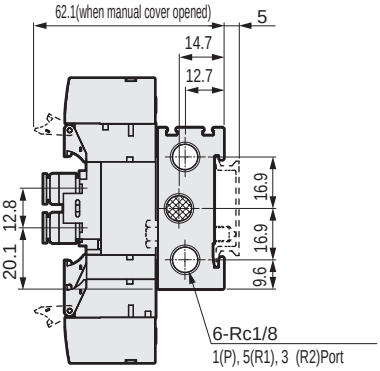

* The dimensions of the 2-position single 3-port valve are the same as those of the single, and a plug is provided for either port A or port B.
* Refer to page 855 for mounting hole details.

Station No.	2	3	4	5	6	7	8	9	10	11	12	13	14	15	16	17	18	19	20
L	45.3	55.8	66.3	76.8	87.3	97.8	108.3	118.8	129.3	139.8	150.3	160.8	171.3	181.8	192.3	202.8	213.3	223.8	234.3
L_1	30.3	40.8	51.3	61.8	72.3	82.8	93.3	103.8	114.3	124.8	135.3	145.8	156.3	166.8	177.3	187.8	198.3	208.8	219.3
L_2	87.5	100.0	112.5	125.0	137.5	150.0	150.0	162.5	175.0	187.5	200.0	212.5	212.5	225.0	237.5				
L_3	75.0	87.5	100.0	112.5	125.0	137.5	137.5	150.0	162.5	175.0	187.5	200.0	200.0	212.5	225.0				

M4GA2

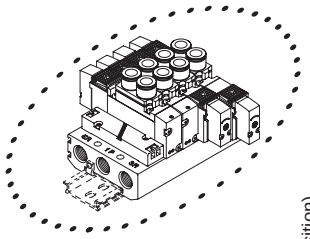

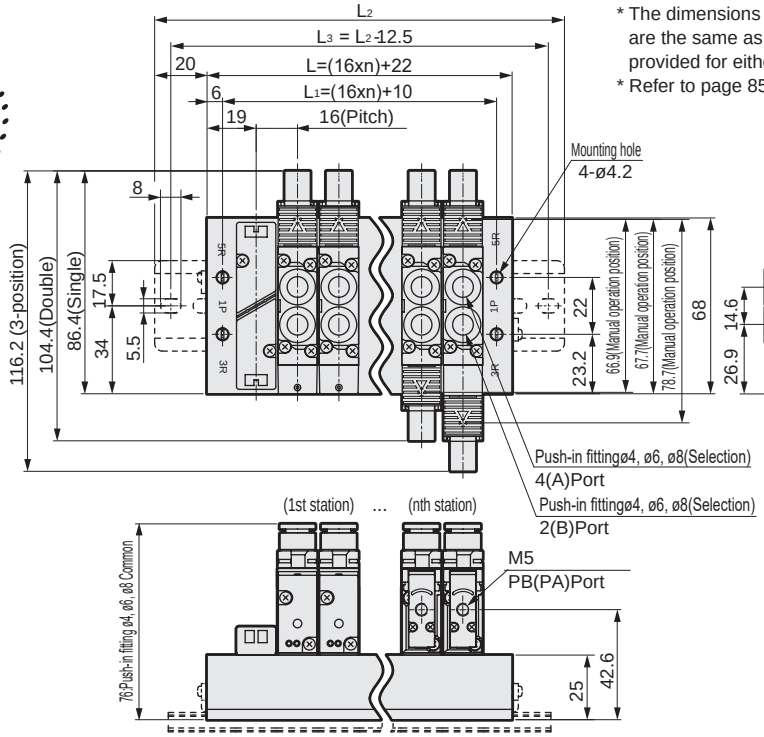

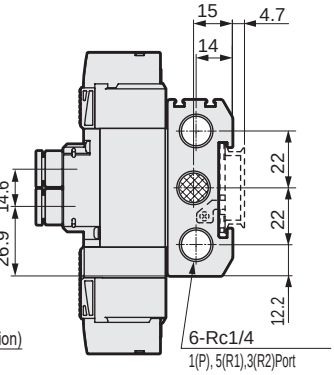

* The dimensions of the 2-position single 3-port valve are the same as those of the single, and a plug is provided for either port A or port B.
* Refer to page 854 for mounting hole details.

Station No.	2	3	4	5	6	7	8	9	10	11	12	13	14	15	16	17	18	19	20
L	54.0	70.0	86.0	102.0	118.0	134.0	150.0	166.0	182.0	198.0	214.0	230.0	246.0	262.0	278.0	294.0	310.0	326.0	342.0
L_1	42.0	58.0	74.0	90.0	106.0	122.0	138.0	154.0	170.0	186.0	202.0	218.0	234.0	250.0	266.0	282.0	298.0	314.0	330.0
L_2	100.0	112.5	137.5	150.0	162.5	175.0	200.0	212.5	225.0	250.0	262.5	275.0	287.5	312.5	325.0				
L_3	87.5	100.0	125.0	137.5	150.0	162.5	187.5	200.0	212.5	237.5	250.0	262.5	275.0	300.0	312.5				

Dimensions CAD

M4GA3

* The dimensions of the 2-position single 3-port valve are the same as those of the single, and a plug is provided for either port A or port B.
* Refer to page 854 for mounting hole details.

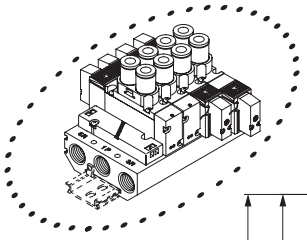

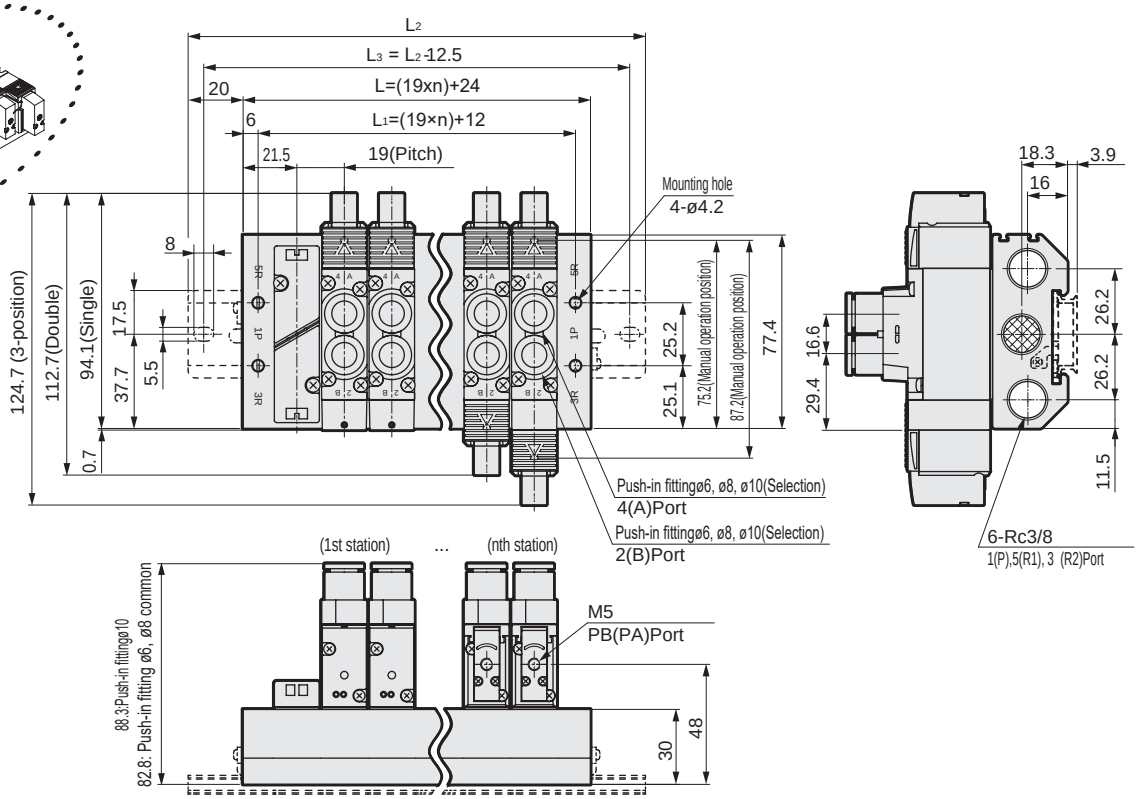

Station No.	2	3	4	5	6	7	8	9	10	11	12	13	14	15	16	17	18	19	20
L	62.0	81.0	100.0	119.0	138.0	157.0	176.0	195.0	214.0	233.0	252.0	271.0	290.0	309.0	328.0	347.0	366.0	385.0	404.0
L_1	50.0	69.0	88.0	107.0	126.0	145.0	164.0	183.0	202.0	221.0	240.0	259.0	278.0	297.0	316.0	335.0	354.0	373.0	392.0
L_2	112.5	125.0	150.0	162.5	187.5	200.0	225.0	237.5	262.5	275.0	300.0	312.5	337.5	350.0	375.0				
L_3	100.0	112.5	137.5	150.0	175.0	189.5	212.5	225.0	250.0	262.5	287.5	300.0	325.0	337.5	362.5				

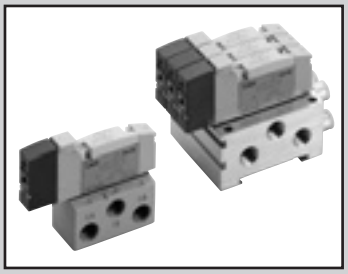

Master valve single unit/manifold (metal base)
Base piping

(M)4GB1/2/3 Series

● Applicable cylinder bore size: ø20 to ø100

RoHS CAD

JIS symbol

● 3-port valve

2-position single NC

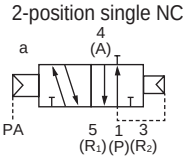

2-position single NO

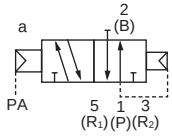

● 5-port valve

2-position single

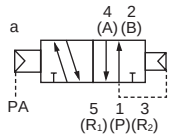

2-position double

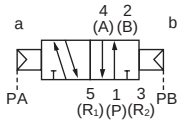

3-position
All ports closed

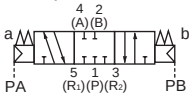

3-position A/B/R connection

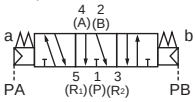

3-position P/A/B connection

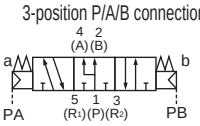

Common specifications

1 MPa ≈ 145.0 psi, 1 MPa = 10 bar

Item		Description
Valve and operation		Pilot operated soft spool valve
Working fluid		Compressed air
Max. working pressure	MPa	0.7 (≈101 psi, 7 bar)
Min. working pressure (*1)	MPa	Refer to main pressure section in the table below
Proof pressure	MPa	1.05 (≈152 psi, 10 bar)
Ambient temperature	°C	-5 (23°F) to 55 (131°F) (no freezing)
Fluid temperature	°C	5 (41°F) to 55 (131°F)
Manual override		Non-locking/locking common
Pilot exhaust method (manual operation)		Main valve/pilot valve common exhaust
Lubrication	(*2)	Not required
Vibration resistance	m/s^2	50 or less
Impact resistance	m/s^2	300 or less
Atmosphere		Cannot be used in corrosive gas environments

*1: When operating manually, supply pressure to port P as shown in the table below is required.
2-position 0.1 MPa and over
3-position 0.2 MPa and over

*2: Use turbine oil Class 1 ISO VG32 for lubrication.
Excessive or intermittent lubrication results in unstable operation.

Individual specifications

Base piping (discrete/manifold)

No. of ports	Model No.		Solenoid position	Pilot port PA/PB	Main pressure	Pilot signal pressure MPa	Other specifications Page *
	Single unit	Manifold					
5-port	4GB111R	M4GB111R	2-position single	M5	0.2 to 0.7	(0.6 × main pressure + 0.06) to 0.7	Single unit: Page 60 Manifold: Page 112
	4GB121R	M4GB121R	2-position double		0 to 0.7	0.2 to 0.7	
	4GB1$^{3}_{5}$1R	M4GB1$^{3}_{5}$1R	3-position				
	4GB211R	M4GB211R	2-position single	M5	0.2 to 0.7	(0.6 × main pressure + 0.06) to 0.7	
	4GB221R	M4GB221R	2-position double		0 to 0.7	0.2 to 0.7	
	4GB2$^{3}_{5}$1R	M4GB2$^{3}_{5}$1R	3-position				
	4GB311R	M4GB311R	2-position single	M5	0.2 to 0.7	(0.6 × main pressure + 0.06) to 0.7	
	4GB321R	M4GB321R	2-position double		0 to 0.7	0.2 to 0.7	
	4GB3$^{3}_{5}$1R	M4GB3$^{3}_{5}$1R	3-position				

Note Other specifications are the same as those of 4G Series. Refer to pages for each specification.

How to order

Single master valve

4GB2 1 1R - 08 - H

- Ⓐ Model No.
- Ⓑ Solenoid position
- Ⓒ Port size
- Ⓓ Option

Code	Description	Ⓐ Model No. 4GB1	4GB2	4GB3
Ⓑ Solenoid position				
1	2 position single	●	●	●
2	2-position double	●	●	●
3	3-position all ports closed	●	●	●
4	3-position ABR connection	●	●	●
5	3-position PAB connection	●	●	●
Ⓒ Port size				
Port	Port A/B	Port P/R1/R2 ②= Rc1/8 ③=Rc1/4 ④=Rc3/8		
06	Rc1/8	②		
08	Rc1/4		③	③
10	Rc3/8			④
Port	4(A)/2(B) port	Port P/R1/R2 ⑤=1/8NPT ⑥=1/4NPT ⑦=3/8NPT		
06 N	NPT1/8 (*3)	⑤		
08 N	NPT1/4 (*3)		⑥	⑥
10 N	NPT3/8 (*3)			⑦
Port	4(A)/2(B) port	Port P/R1/R2 ⑧=G1/8 ⑨=G1/4 ⑩=G3/8		
06G	G1/8 (*3)	⑧		
08G	G1/4 (*3)		⑨	⑨
10G	G3/8			⑩
Ⓓ Option				
Blank	No	●	●	●
H	With exhaust check valve (*1)	●	●	●
A	Ozone/coolant proof product	●	●	●
F	Port A/B filter built in (*2)	●	●	●

is not available.

⚠ Precautions for model No. selection

*1:3-position all ports closed and PAB connection are not provided with the exhaust check valve specifications (H). Refer to page 851 for details on the exhaust check valve.
*2: A filter is built into port P as standard.
*3: Made to order.

How to order

Manifold

M 4GB2 1 1R - C4 - H D - 8

Discrete master valve for manifold (gasket, mounting screw, PR check valve attached)

4GB2 1 8R - 00 - H

- Ⓐ Model No.
- Ⓑ Solenoid position
- Ⓒ Port size
- Ⓓ Option
- Ⓔ Mount type
- Ⓕ Station No.

Code	Description	Ⓐ Model No. M4GB1	M4GB2	M4GB3
Ⓑ Solenoid position				
1	2 position single	●	●	●
2	2-position double	●	●	●
3	3-position all ports closed	●	●	●
4	3-position ABR connection	●	●	●
5	3-position PAB connection	●	●	●
8	Mix manifold(for multiple solenoid positions)	●	●	●
Ⓒ Port size				
Port	4(A)/2(B)Port	Port P/R1/R2 ②= Rc1/8 ③=Rc1/4 ④=Rc3/8		
C4	ø4 push-in fitting	②	③	
C6	ø6 push-in fitting	②	③	④
C8	ø8 push-in fitting		③	④
C10	ø10 push-in fitting			④
CL4	Radial ø4push-in fitting(Upward) (*1)	②		
CL6	ø6 push-in L-fitting(Upward) (*1)	②	③	
CL8	ø8 push-in L-fitting(Upward) (*1)		③	④
CL10	ø10 push-in L fitting(Upward) (*1)			④
CX	Push-in fitting mix	②	③	④
M5	M5	②		
06	Rc1/8		③	
08	Rc1/4			④
Port	4(A)/2(B)Port	Port P/R1/R2 (1/8) = 1/8NPT, (1/4) = 1/4NPT, (3/8) = 3/8NPT		
C3N	ø1/8" push-in fitting	⑤		
C4N	ø5/32" push-in fitting	⑤		
C6N	ø1/4" push-in fitting		⑥	
C8N	ø5/16" push-in fitting		⑥	⑦
C10N	ø3/8" push-in fitting			⑦
CL3N	ø1/8" push-in L-fitting (upward) (*6)	⑤		
CL4N	ø5/32" push-in L-fitting (upward) (*6)	⑤		
CL6N	ø1/4" push-in L-fitting upward (*6)		⑥	
CL8N	Radial ø5/16 push-in fitting (upward) (*6)		⑥	
CXN	Push-in fitting mix	⑤	⑥	⑦
M5N	M5	⑤		
06 N	NPT1/8		⑥	
08 N	NPT1/4 (*6)			⑦
Port	4(A)/2(B)Port	Port P/R1/R2 ⑧=G1/8 ⑨=G1/4 ⑩=G3/8		
C4G	ø4 push-in fitting	⑧	⑨	
C6G	ø6 push-in fitting	⑧	⑨	
C8G	ø8 push-in fitting		⑨	⑩
C10G	ø10 push-in fitting			⑩
CL4G	ø4 push-in L-fitting (upward) (*6)	⑧		
CL6G	ø6 push-in L-fitting (upward) (*6)	⑧	⑨	
CL8G	ø8 push-in L-fitting (upward) (*6)		⑨	
CXG	Push-in fitting mix	⑧	⑨	⑩
M5G	M5	⑧		
06G	G1/8		⑨	
08G	G1/4			⑩
00	Discrete valve for integrated base	●	●	●
Ⓓ Option				
Blank	No	●	●	●
H	With exhaust check valve (*2)	●	●	●
A	Ozone/coolant proof product	●	●	●
F	Port A/B filter built in (*3)	●	●	●
Z1	Air supply spacer (*4)(*5)	●	●	●
Z2	In-stop valve spacer (*4)(*5)		●	●
Z3	Exhaust spacer (*4)(*5)	●	●	●
Ⓔ Mount type				
Blank	Direct mount	●	●	●
D	DIN rail mount	●	●	●
Ⓕ Station No.				
2	2 stations	●	●	●
to	to			
20	Refer to page 112 for the max. station No. per model.			

is not available.

⚠ Precautions for model No. selection

1 : CL push-in L fitting (upward) is compatible only with the 2-position single manifold.
Long elbow is for port A and short elbow for port B.

*2 : 3-position all ports closed and PAB connection are not provided with the exhaust check valve specifications (H). Refer to page 851 for details on the exhaust check valve.

*3 : A filter is built into port P as standard.

*4 : Specify the spacer mounting position and quantity on the manifold specifications sheet. Stacking of spacers is not possible.
Combination with the masking plate is not supported. Refer to pages 188 to 192 for details.

*5 : Not available with the discrete master valve for manifold.

*6 : Made-to-order product.

Dimensions CAD

4GB111R

● 2-position single

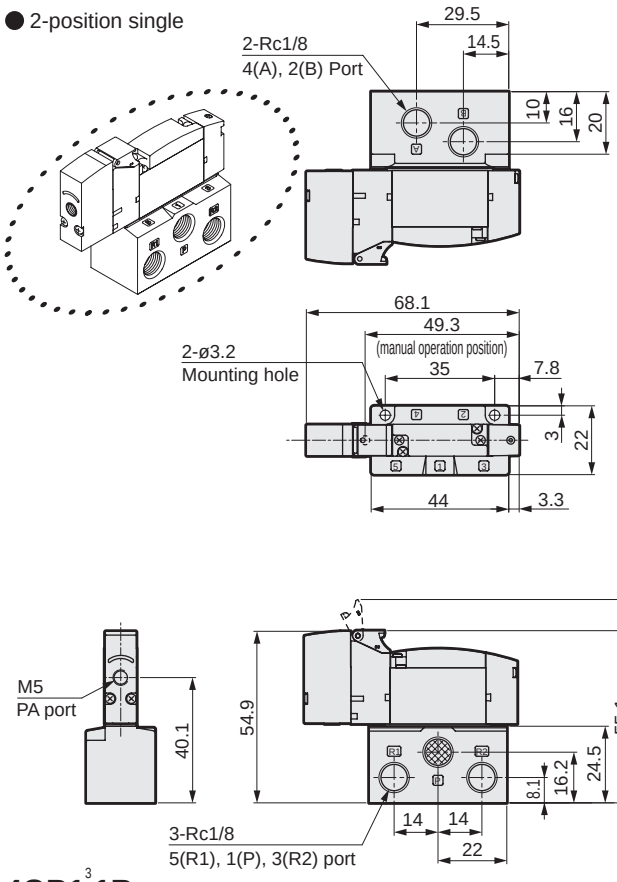

4GB121R

● 2-position double

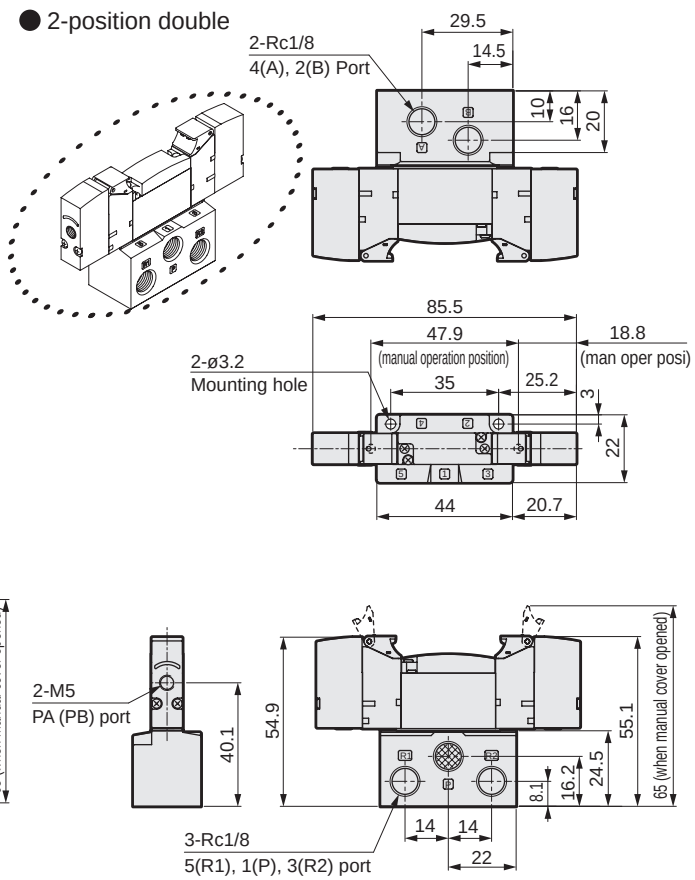

4GB1$^{3}_{4}_{5}$1R

● 3-position

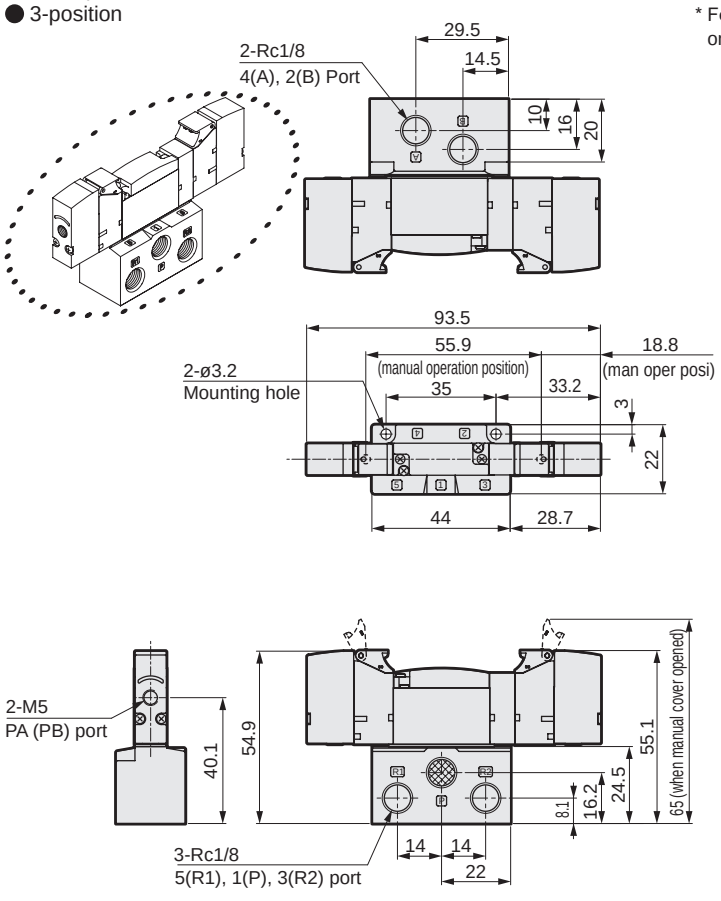

* For NPT and G thread specifications, refer to the solenoid valve dimensions on pages 86 to 95.

Dimensions CAD

4GB211R

● 2-position single

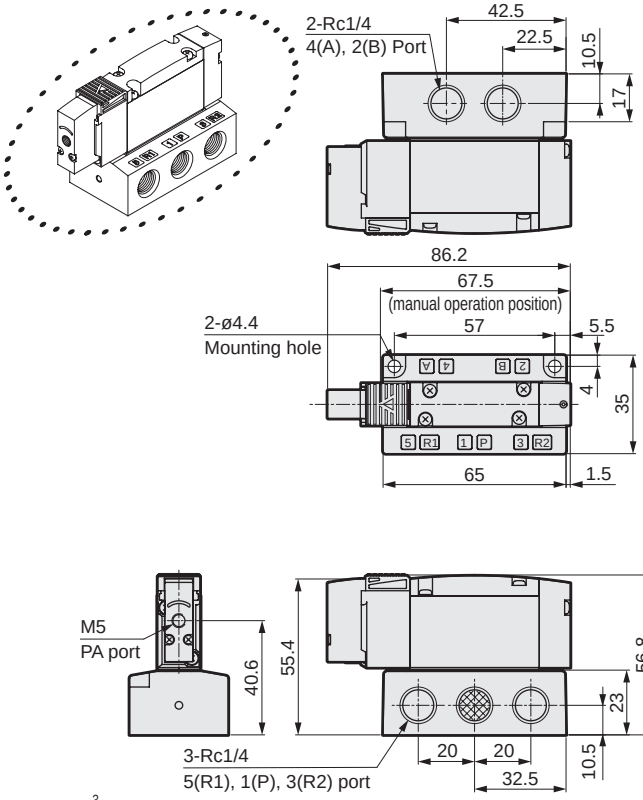

4GB221R

● 2-position double

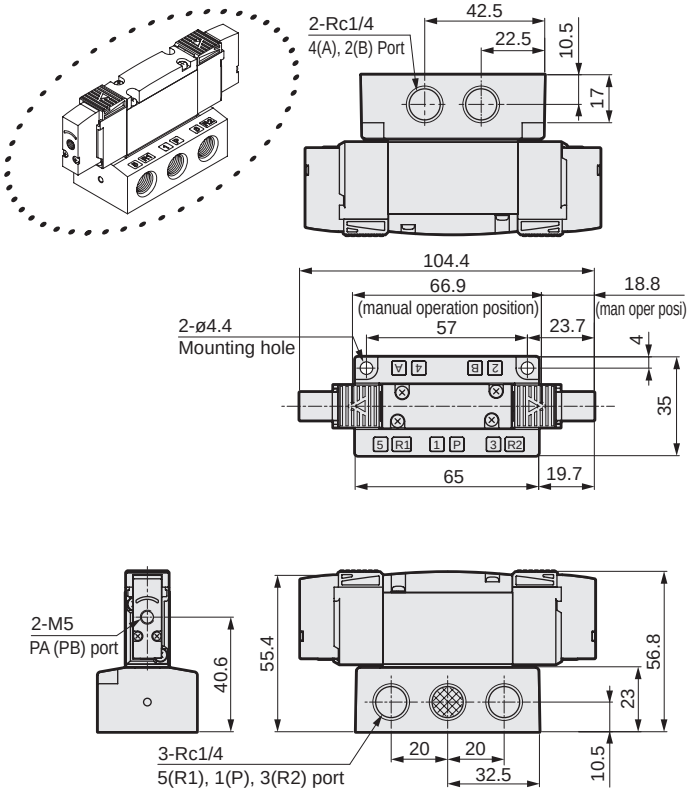

4GB2$^{3}_{5}$1R

● 3-position

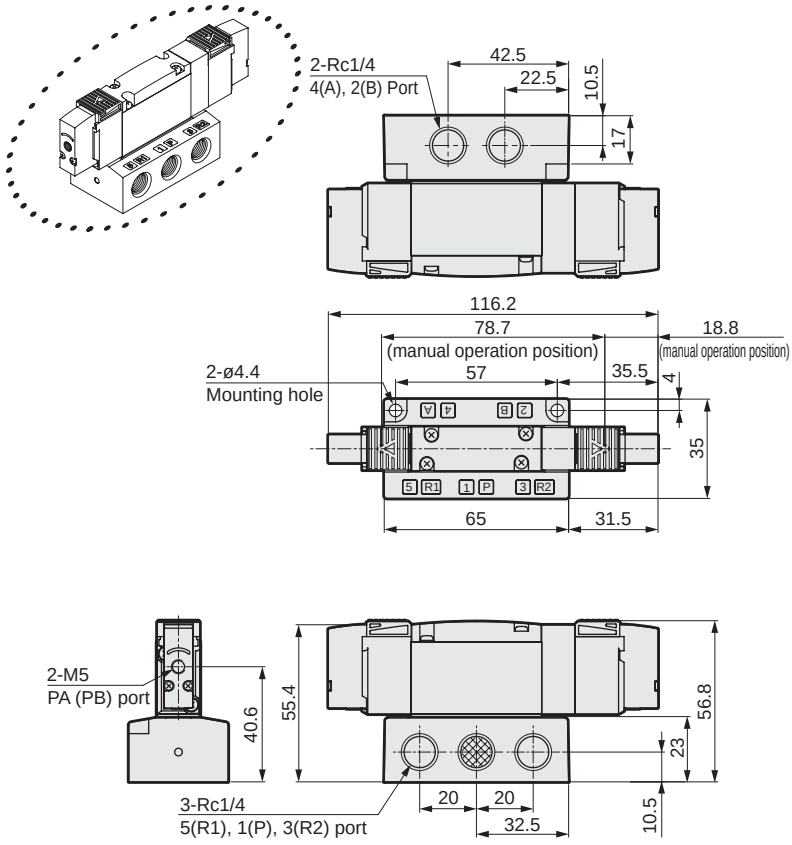

* For NPT and G thread specifications, refer to the solenoid valve dimensions on pages 86 to 95.

Dimensions CAD

4GB311R

● 2-position single

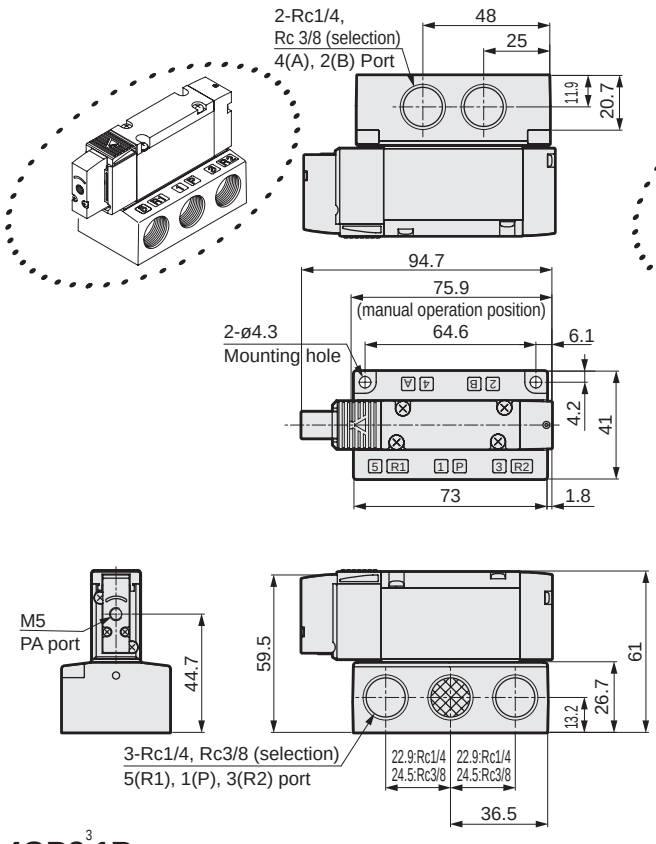

4GB321R

● 2-position double

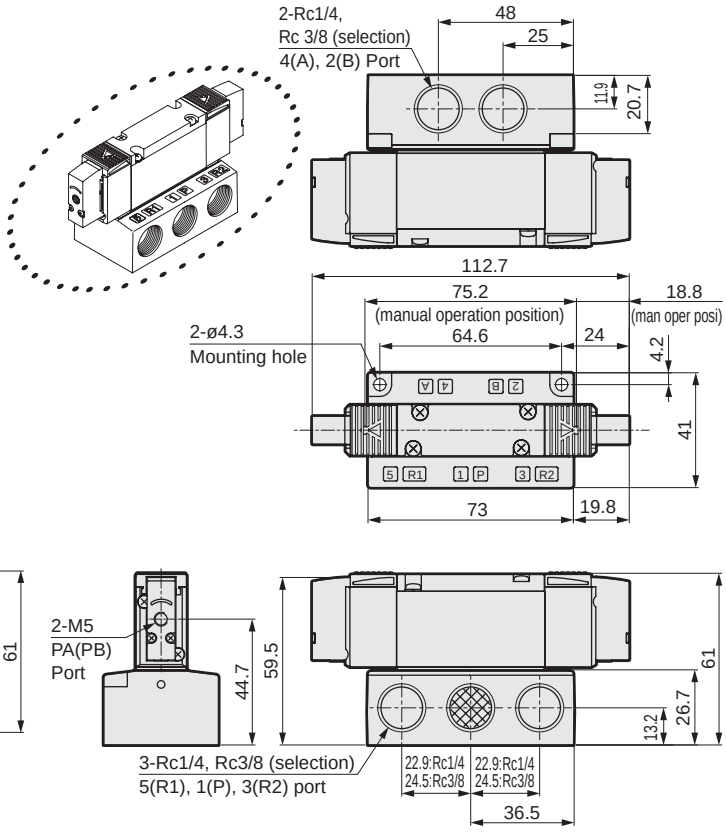

4GB3$^{3}_{4}_{5}$1R

● 3-position

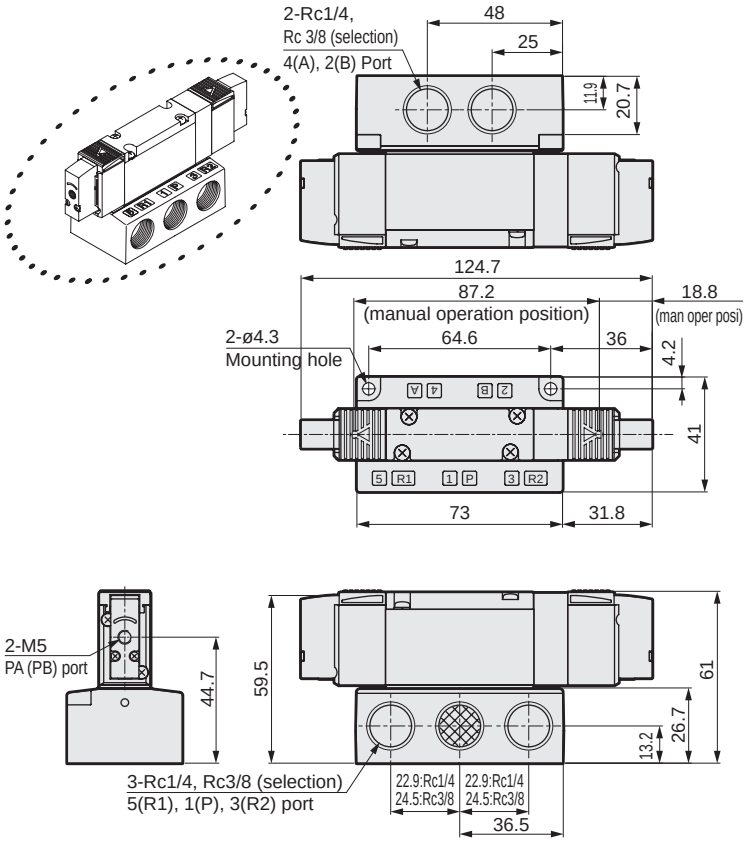

* For NPT and G thread specifications, refer to the solenoid valve dimensions on pages 86 to 95.

Dimensions CAD

M4GB1

● Direct mount installation

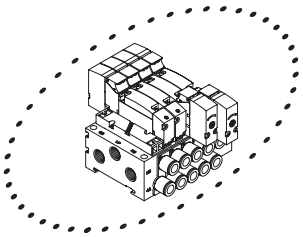

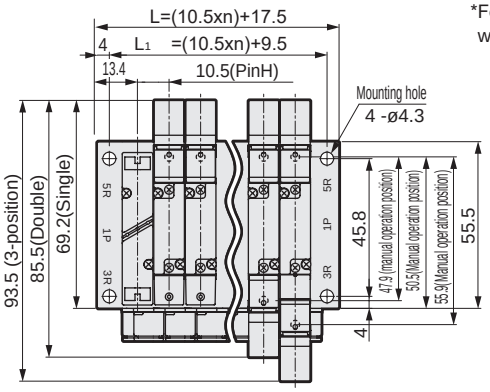

*Female thread and push-in L fitting (upward) are common with 4G. Refer to each dimension.

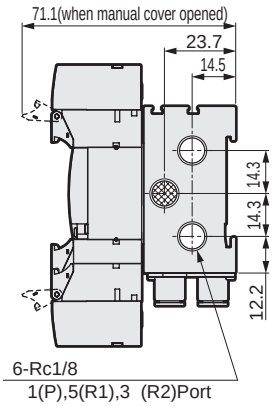

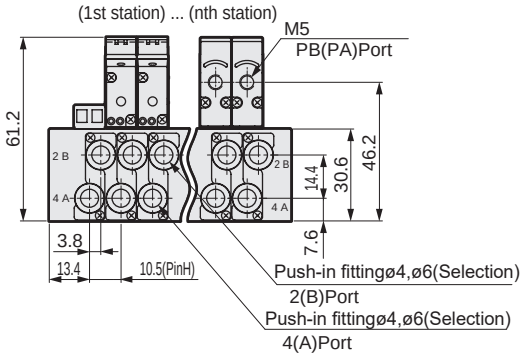

Station No.	2	3	4	5	6	7	8	9	10	11	12	13	14	15	16	17	18	19	20
L	38.5	49.0	59.5	70.0	80.5	91.0	101.5	112.0	122.5	133.0	143.5	154.0	164.5	175.0	185.5	196.0	206.5	217.0	227.5
L_1	30.5	41.0	51.5	62.0	72.5	83.0	93.5	104.0	114.5	125.0	135.5	146.0	156.5	167.0	177.5	188.0	198.5	209.0	219.5

● DIN rail installation (D)

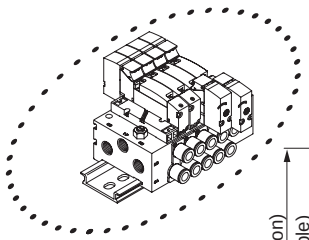

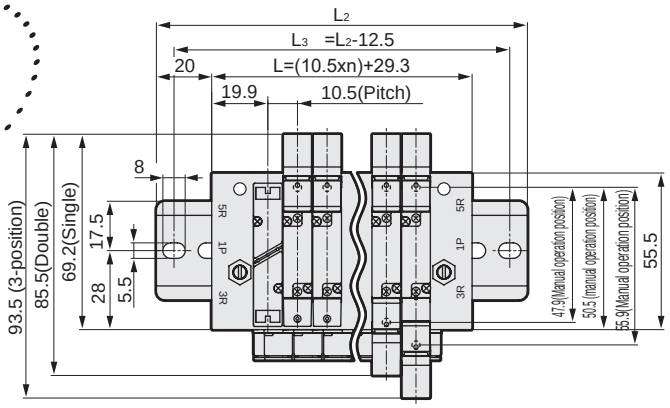

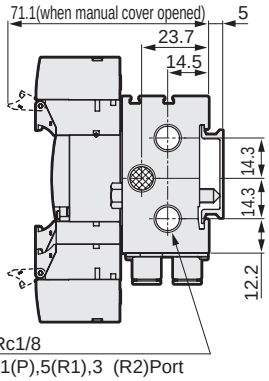

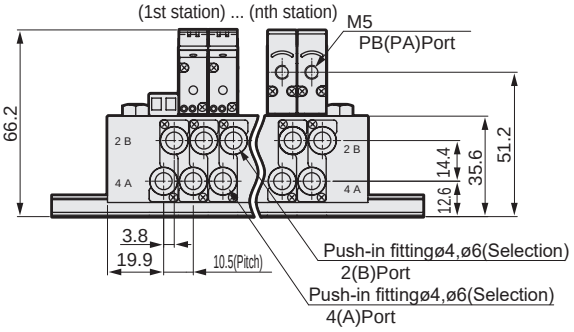

Station No.	2	3	4	5	6	7	8	9	10	11	12	13	14	15	16
L	50.3	60.8	71.3	81.8	92.3	102.8	113.3	123.8	134.3	144.8	155.3	165.8	176.3	186.8	197.3
L_2	100.0	112.5	112.5	125.0	137.5	150.0	162.5	175.0	175.0	187.5	200.0	212.5	225.0	237.5	237.5
L_3	87.5	100.0	100.0	112.5	125.0	137.5	150.0	162.5	162.5	175.0	187.5	200.0	212.5	225.0	225.0

Dimensions CAD

M4GB2

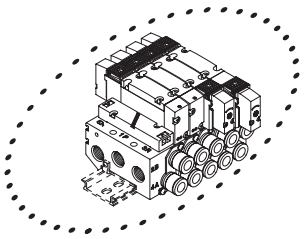

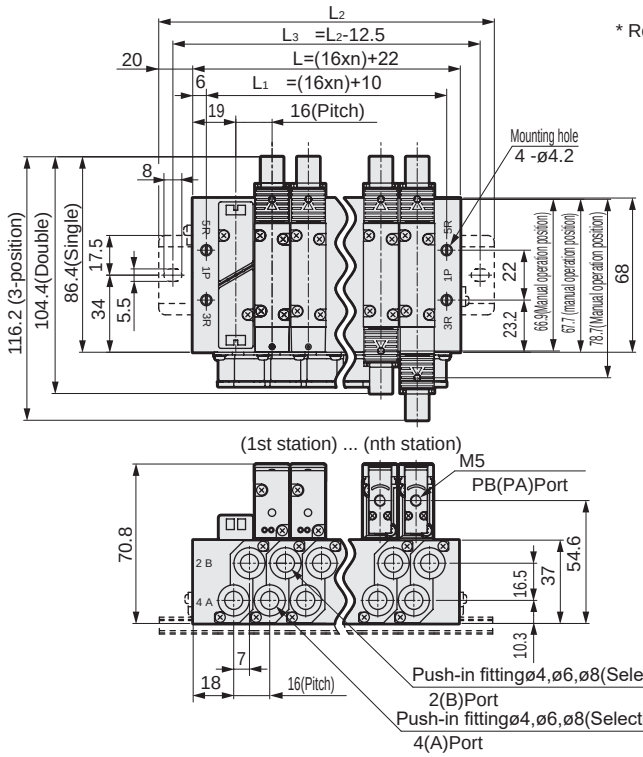

* Refer to page 854 for mounting hole details.

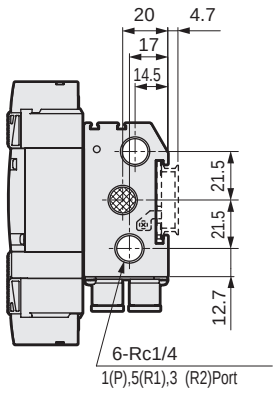

Station No.	2	3	4	5	6	7	8	9	10	11	12	13	14	15	16	17	18	19	20
L	54.0	70.0	86.0	102.0	118.0	134.0	150.0	166.0	182.0	198.0	214.0	230.0	246.0	262.0	278.0	294.0	310.0	326.0	342.0
L_1	42.0	58.0	74.0	90.0	106.0	122.0	138.0	154.0	170.0	186.0	202.0	218.0	234.0	250.0	266.0	282.0	298.0	314.0	330.0
L_2	100.0	112.5	137.5	150.0	162.5	175.0	200.0	212.5	225.0	250.0	262.5	275.0	287.5	312.5	325.0				
L_3	87.5	100.0	125.0	137.5	150.0	162.5	187.5	200.0	212.5	237.5	250.0	262.5	275.0	300.0	312.5				

M4GB3

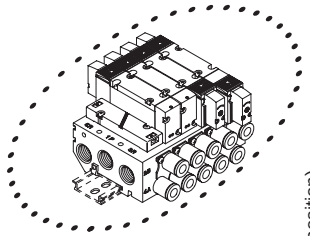

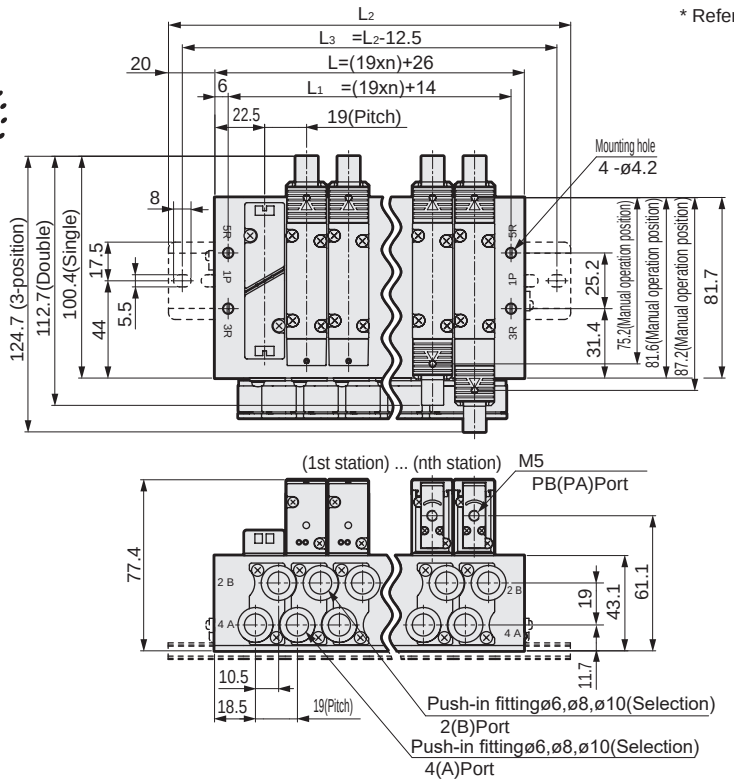

* Refer to page 854 for mounting hole details.

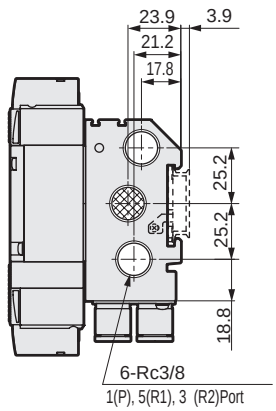

Station No.	2	3	4	5	6	7	8	9	10	11	12	13	14	15	16	17	18	19	20
L	64.0	83.0	102.0	121.0	140.0	159.0	178.0	197.0	216.0	235.0	254.0	273.0	292.0	311.0	330.0	349.0	368.0	387.0	406.0
L_1	52.0	71.0	90.0	109.0	128.0	147.0	166.0	185.0	204.0	223.0	242.0	261.0	280.0	299.0	318.0	337.0	356.0	375.0	394.0
L_2	112.5	125.0	150.0	162.5	187.5	200.0	225.0	237.5	262.5	275.0	300.0	325.0	337.5	362.5	375.0				
L_3	100.0	112.5	137.5	150.0	175.0	187.5	212.5	225.0	250.0	262.5	287.5	312.5	325.0	350.0	362.5				

M4GA/M4GB Series

How to fill out master valve M4G series manifold specifications sheet

● Manifold model No. (example)

Precautions for fitting mix CX

The A/B port fitting can be selected freely by indicating “CX” in the port size area.

Selectable cartridge fittings

4G1	C4, C6, X (plug)
4G2	C4, C6, C8, X (plug)
4G3	C6, C8, C10, X (plug)

How to use base piping M4GB*11R as a 3-port valve

By attaching a plug cartridge on one side of the A/B port, it can be used as an NO/NC.
Indicate "X" in the fitting CX column.

Switching method	Plug mounting port
NC (Normally closed)	B
NO (Normally open)	A

For female thread specifications, indicate the required number of plugs in the “Thread plug” area at the end. Female threads and cartridge fitting cannot be used together in one manifold set.

Elbow specifications

● Available only for 2-position single manifold.
Port A is a long elbow and port B a short elbow.

M 4 G (A/B) 1 8 1R- CX - 9

Solenoid valve — Solenoid position — Port size — Station No.

Solenoid valve model No.	Fitting CX A	Fitting CX B	Installation position 1	2	3	4	5	6	7	8	9	10	11	12	13	14	15	16	17	18	19	20	21	22	23	24	Quantity
4G(A/B)118R-CX	C6	X	○	○																							2
4G(A/B)118R-C6					○	○																					2
4G(A/B)128R-C6							○	○																			2
4G(A/B)158R-CX	C6	C4							○	○																	2
4G 1 8R-																											
3GA1 8R-																											
3GA1 8R-																											
4G1R-MP											○																1

Indicate X for a plug

Fill in “CX” when changing the fitting combination

Mounting rail	L_2=	Accessory	Blanking plug	Blanking plug	Thread plug	Silencer	Silencer
			GWP4-B	GWP6-B	4G1R-M5P	SLW-6S	SLW-6A
			Push-in fitting tube remover (attached as standard) Attachment not required✓				

Reference circuit diagram For manifold configuration as shown above (base piping) [simplified circuit diagram]

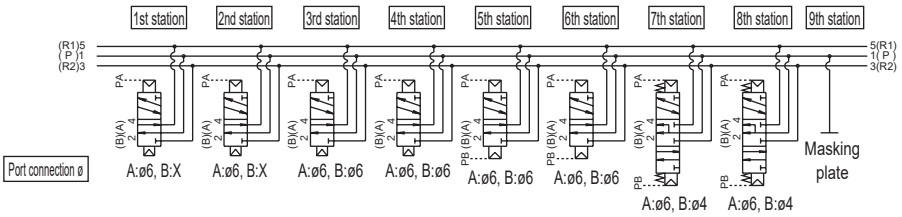

* The manifold station numbers are set in order from the left with the piping port facing forward.

Preparing manifold specifications sheet

● From the manifold specifications for each model, select and fill out the appropriate form.

M4G(A/B)1 ..... Page 343
M4G(A/B)2 ..... Page 344
M4G(A/B)3 ..... Page 345

*1: Select the silencer mounting after confirming the dimensions.
*2: Use SLW-8S for the M4GA2 DIN rail mount. Interference occurs if SLW-8A is used.

Master valve

M4G$^{A}_{B}$1 Manifold specifications sheet

Issued / /

Company

Contact

Order No.

● Contact ● Quantity set(s) ● Delivery date /

Slip No.	Order No.

● Manifold model No.

M ☐ **G**$^{A}_{B}$**1** ☐ **1R-** ☐ **-** ☐ ☐ **-** ☐

Type of solenoid valve / Solenoid position / Port size / Other options / Mount / Station No.

Solenoid valve model No.	Fitting CX		Valve installation position																						Quantity
	A	B	1	2	3	4	5	6	7	8	9	10	11	12	13	14	15	16	17	18	19	20	21	22	23	24	
4G ☐ 1 ☐ 8R- ☐																											
4G ☐ 1 ☐ 8R- ☐																											
4G ☐ 1 ☐ 8R- ☐																											
4G ☐ 1 ☐ 8R- ☐																											
4G ☐ 1 ☐ 8R- ☐																											
3GA1 ☐ 8R- ☐																											
3GA1 ☐ 8R- ☐																											
Masking plate **4G1R-MP-** ☐																											
Air supply spacer **4G1R-P-** ☐																											
Air supply spacer **4G1R-P-** ☐																											
In-stop valve spacer **4G1R-IS**																											
Exhaust spacer **4G1R-R-** ☐																											

Mounting rail	L_2= ☐ * Write an integer multiple of 12.5.	Accessory	Blanking plug		Blanking plug		Thread plug		Silencer		Silencer	
			GWP4-B		**GWP6-B**		**4G1R-M5P**		**SLW-6S**		**SLW-6A**	
			Push-in fitting tube remover (attached as standard) ☐ Not required (check the box)									

Master valve

M4G$^{A}_{B}$2 Manifold specifications sheet

Issued / /

Company

Contact

Order No.

● Contact ● Quantity set(s) ● Delivery date /

Slip No.	Order No.

● Manifold model No.

M G$^{A}_{B}$2 1R- - - -

Type of solenoid valve | Solenoid position | Port size | Other options | Mount | Station No.

Solenoid valve model No.	Fitting CX A	Fitting CX B	Valve installation position 1	2	3	4	5	6	7	8	9	10	11	12	13	14	15	16	17	18	19	20	21	22	23	24	Quantity
4G 2 8R-																											
4G 2 8R-																											
4G 2 8R-																											
4G 2 8R-																											
4G 2 8R-																											
3GA2 8R-																											
3GA2 8R-																											
Masking plate 4G2R-MP-																											
Air supply spacer 4G2R-P-																											
Air supply spacer 4G2R-P-																											
In-stop valve spacer 4G2R-IS																											
Exhaust spacer 4G2R-R-																											

Mounting rail	L_2=	Accessory	Blanking plug						Thread plug		Silencer			
	* Write an integer multiple of 12.5.		GWP4-B		GWP6-B		GWP8-B		4G2R-06P		SLW-8S		SLW-8A	

Master valve

M4G$^{A}_{B}$3 Manifold specifications sheet

Issued / /

Company

Contact

Order No.

● Contact ● Quantity set(s) ● Delivery date /

Slip No.	Order No.

● Manifold model No.

M [ ] **G**$^{A}_{B}$**3** [ ] **1R-** [ ] **-** [ ] [ ] **-** [ ]

Type of solenoid valve | Solenoid position | Port size | Other options | Mount | Station No.

Solenoid valve model No.	Fitting CX		Valve installation position																						Qty
	A	B	1	2	3	4	5	6	7	8	9	10	11	12	13	14	15	16	17	18	19	20	21	22	23	24	
4G [ ] 3 [ ] 8R- [ ]																											
4G [ ] 3 [ ] 8R- [ ]																											
4G [ ] 3 [ ] 8R- [ ]																											
4G [ ] 3 [ ] 8R- [ ]																											
4G [ ] 3 [ ] 8R- [ ]																											
3GA3 [ ] 8R- [ ]																											
3GA3 [ ] 8R- [ ]																											
Masking plate 4G3R-MP- [ ]																											
Air supply spacer 4G3R-P- [ ]																											
Air supply spacer 4G3R-P- [ ]																											
In-stop valve spacer 4G3R-IS																											
Exhaust spacer 4G3R-R- [ ]																											

Mounting rail	Accessory	Blanking plug						Thread plug		Silencer			
L_2= [ ] * Write an integer multiple of 12.5.		GWP6-B		GWP8-B		GWP10-B		4G3R-08P		SLW-10A		SLW-10L	

MEMO

4GB1 to 3/M4GB1 to 3/MN4GB1/2

Pilot operated 3, 5-port valve With pressure sensor

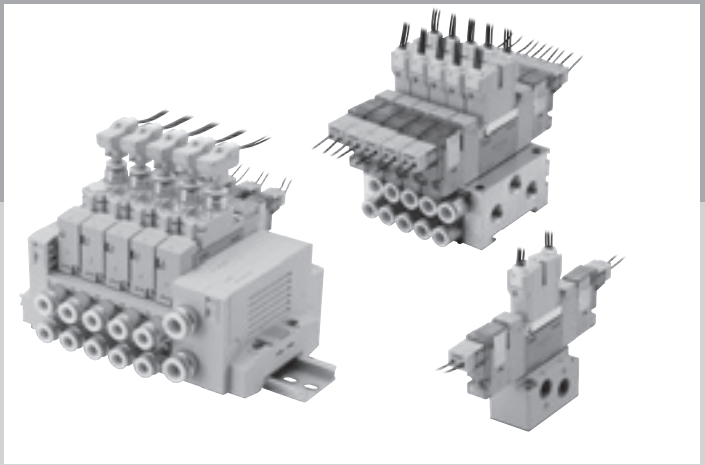

CONTENTS

Series variation 8/226
Electrical connections list (electrical connection methods/circuit diagram) 11
Product introduction 348

Metal base

● Discrete valve
3GB1 to 2, 4GB1 to 3 350

● Individual wiring manifolds
M3GB1 to 2, M4GB1 to 3 356

● Reduced wiring manifold
M3GB1 to 2-T*(D), M4GB1 to 2-T*(D)
(Common terminal block/D-sub-connector/
flat cable connector/serial transmission) 366

Block manifold

● Individual wiring block manifold
MN3GB1 to 2, MN4GB1 to 2 380

● Reduced wiring block manifold
MN3GB1 to 2, MN4GB1 to 2 386

● Mix manifold
MN3GBX12, MN4GBX12 398

Related products (in-stop valve spacer/air supply spacer/
exhaust spacer/pilot check valve/silencer/plug/DIN rail) 409
Related parts 418
Manifold specifications sheet 420
Technical data
(1) Pneumatic system selection guide 844
(2) Notes on wiring 815
(3) Exhaust check valve 851
(4) How to expand reduced wiring manifold 836
⚠ Safety precautions 850

Visualization of changes.

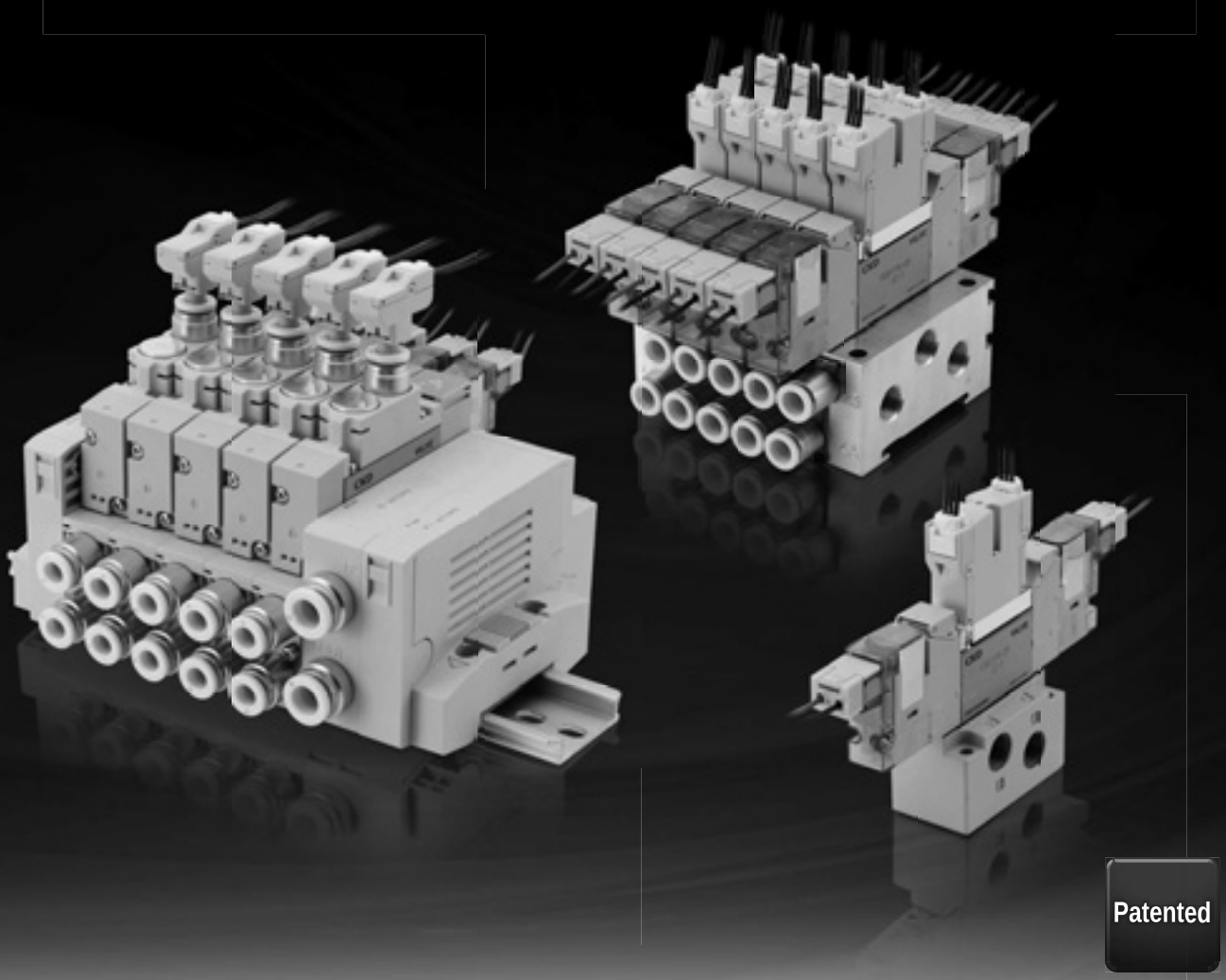

Patented

Applications

- Detects abnormal operation of the secondary pressure after the valve through output monitoring of the sensor.

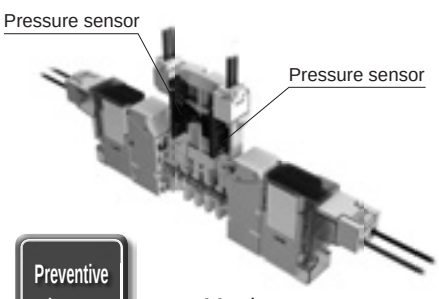

Preventive maintenance

Monitors pressure changes in ports A and B

- Alternate operation confirmation for actuators in strong magnetic fields or explosive atmospheres.

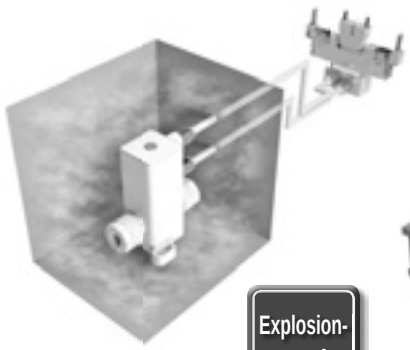

Explosion-proof

- Alternate operation confirmation for cylinders installed in moving parts.



Cylinder switch cable disconnection countermeasures

Sensor use examples

Valve operation detection examples
Response time from input signal of the valve to set pressure can be monitored by PLC.
When the response time exceeds the set threshold, it recognizes that the valve operation is abnormal.

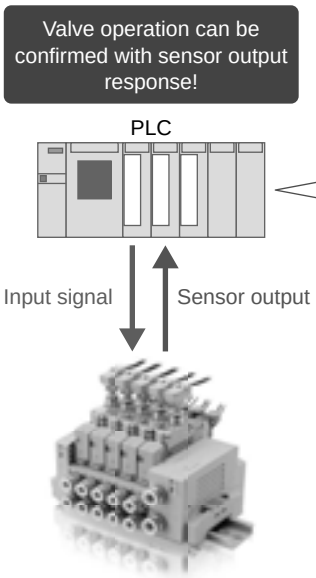

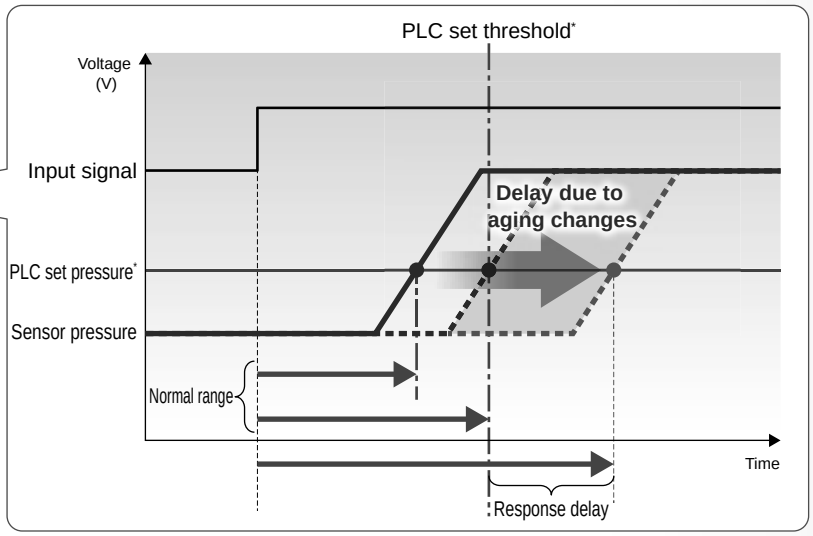

* Set values and threshold values must be set by the customer.

Variation

1-port detection
Ideal for single and double operation detection.

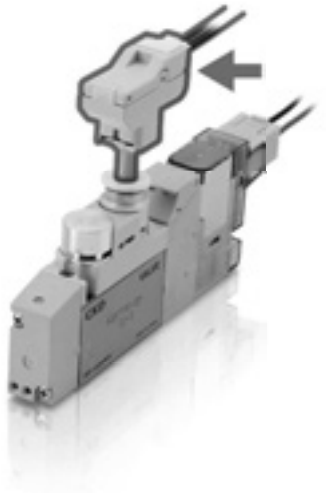

2-port detection
Ideal for operation detection for two 3-port valve integrated types and 3-position types.

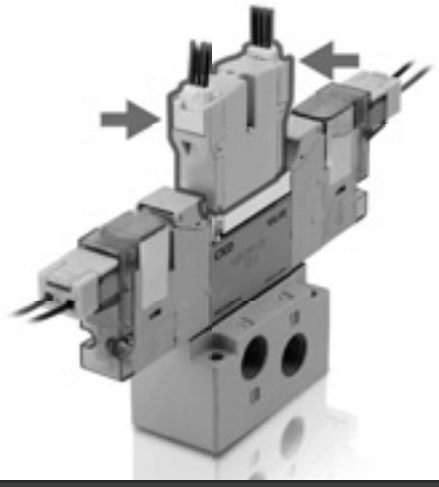

Connector wiring

Wiring uses a connector. Easily replaced during maintenance.



Single unit compatible

Pressure sensor can also be purchased as a single unit.



* Combination with a push-in fitting (tee, etc.) enables use as a piping pressure sensor.

Discrete sensor model No.

PPEV - P10A - H4-B

Model No.

Pressure range	
P10A	0 to 1.0MPa
V01A	-100 to 0kPa

Port size	
H4-B	ø4 mm plug
H6-B	ø6 mm plug
M5	M5

* Refer to the PPEV-□A Series pages in "Pneumatic, Vacuum and Auxiliary Components (catalog No. CB-024SA)" for details on the pressure sensor.

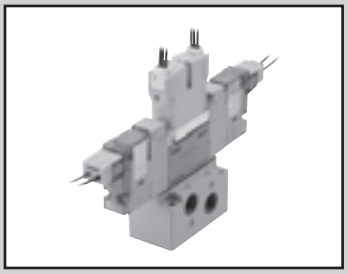

Discrete valve
Base piping With pressure sensor

3GB1/2 / 4GB1/2/3 Series

● Applicable cylinder bore size: ø20 to ø100

JIS symbol

● Two 3-port valves integrated

(A side valve: NC, B side valve: NC)

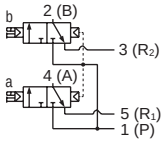

(A side valve: NC, B side valve: NO)

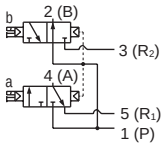

(A side valve: NO, B side valve: NC)

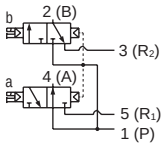

(A side valve: NO, B side valve: NO)

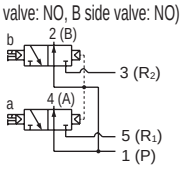

● 5-port valve

2-position single

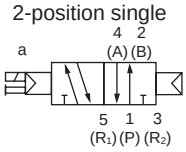

2-position double

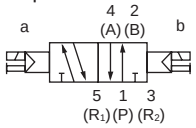

3-position
All ports closed

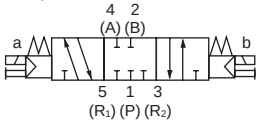

3-position A/B/R connection

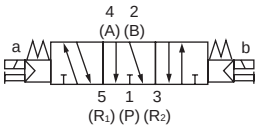

3-position P/A/B connection

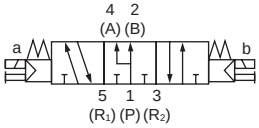

Common specifications

1 MPa ≈ 145.0 psi, 1 MPa = 10 bar

Item		Description
Valve and operation		Pilot operated soft spool valve
Working fluid		Compressed air
Max. working pressure MPa		0.7 (≈101 psi, 7 bar)
Min. working pressure MPa		0.2 (≈29 psi, 2 bar) (*3)
Proof pressure MPa		1.05 (≈152 psi, 10 bar)
Ambient temperature °C		-5 (23°F) to 55 (131°F) (no freezing)
Fluid temperature °C		5 (41°F) to 55 (131°F)
Manual override		Non-locking/locking common (standard)
Pilot exhaust method	Internal pilot	Main valve/pilot valve common exhaust
	External pilot	Main valve/pilot valve individual exhaust
Lubrication *1		Not required
Degree of protection *2		Dust-proof
Vibration resistance m/s²		50 or less
Impact resistance m/s²		300 or less
Atmosphere		Cannot be used in corrosive gas environments

*1: Use turbine oil Class 1 ISO VG32 for lubrication. Excessive or intermittent lubrication results in unstable operation.
*2: Avoid water drops or oil, etc., during use.
IP65 (jet-proof) applies for DIN terminal box specifications. However, the specified outer diameter of the cord and tightening torque must be used for fixing in place.
*3: The working pressure range is 0 to 0.7 MPa when the external pilot (option code: K) is selected. Set the external pilot pressure between 0.2 and 0.7 MPa.

Electrical specifications

Item		Description					
Rated voltage V		24 DC	12 DC	5 DC	3 DC	100 AC	200 AC
Voltage fluctuation range		±10%					
Holding current A (*4)	Standard	0.015 (0.017)	0.030 (0.034)	0.072 (0.082)	0.120 (0.136)	0.009 (0.009)	0.006 (0.006)
	With low exoergic/energy circuit	0.005	0.010	-		-	
Power consumption W (*4)	Standard	0.35 (0.40)		0.35 (0.40)		-	
	With low exoergic/energy circuit	0.1		-		-	
Apparent power VA (*4) (*5)	Standard	-		-		0.93 (0.98)	1.40
Thermal class		B					
Surge suppressor		Option					
Indicator		Lamp (option)					

*4: Values in ( ) apply when lamp is attached. In addition, the type with low exoergic/energy circuit is only available with lamp.
*5: 200 VAC is the value of DIN terminal box with lamp.

Individual specifications

Port size		3GB1, 4GB1	3GB2, 4GB2	4GB3
Rc thread	Port A/B	Rc1/8	Rc1/4	Rc1/4, Rc3/8
	Port P/R1/R2	Rc1/8	Rc1/4	Rc1/4, Rc3/8
NPT thread (*5)	Port A/B	NPT1/8	NPT1/4	NPT1/4, NPT3/8
	Port P/R1/R2	NPT1/8	NPT1/4	NPT1/4, NPT3/8
G thread (*5)	Port A/B	G1/8	G1/4	-
	Port P/R1/R2	G1/8	G1/4	-

*5: Available as made to order.

Performance/characteristics by model

Item			3GB1/4GB1		3GB2/4GB2		4GB3	
			ON	OFF	ON	OFF	ON	OFF
Response time ms	Two 3-port valves integrated		9	12	12	29	-	-
	2-position	Single	12	12	19	19	25	28
		Double	9	-	18	-	24	-
	3-position	ABR connection	8	15	17	30	23	45

Values with a lamp/surge suppressor are shown. The response times are values with working pressure of 0.5 MPa at 20°C, without lubrication. They depend on the pressure and the lubricant quality.

Weight

Item				3GB1/4GB1	3GB2/4GB2	4GB3
Weight g	2-position	Single	Grommet lead wire	80 (38)	156 (74)	215 (96)
			E-connector	82 (40)	158 (76)	217 (98)
			DIN terminal box	-	193 (111)	249 (130)
		Double	Grommet lead wire	97 (55)	173 (91)	233 (114)
			E-connector	101 (59)	177 (95)	237 (118)
			DIN terminal box	-	216 (134)	273 (154)
	3-position	All ports closed	Grommet lead wire	98 (56)	184 (102)	242 (123)
			E-connector	102 (60)	188 (106)	246 (127)
			DIN terminal box	-	227 (145)	282 (163)

- Values in parenthesis ( ) do not include the single sub-plate. Values for the E-connector include the socket assembly (with 300 mm lead wire). For the EJ-connector, add 16 g/connector to the E-connector weight.
- The weight of the two 3-port valves integrated type is the same as that of 2-position double.

Flow characteristics

Model No.	Solenoid position		P → A/B		A/B→R1/R2	
			C[dm³/(s·bar)]	b	C[dm³//(s·bar)]	b
3GB1 4GB1	Two 3-port valves integrated		0.92	0.08	1.1	0.26
	2-position		1.3	0.27	1.2	0.22
	3-position	All ports closed	1.1	0.31	1.1	0.27
		ABR connection	1.1	0.31	1.3	0.29
		PAB connection	1.4	0.30	1.1	0.26
3GB2 4GB2	Two 3-port valves integrated		1.7	0.42	2.1	0.26
	2-position		2.6	0.20	2.6	0.19
	3-position	All ports closed	2.3	0.32	2.2	0.22
		ABR connection	2.2	0.23	2.6	0.16
		PAB connection	2.4	0.10	2.4	0.22
4GB3	2-position		4.3	0.24	4.2	0.24
	3-position	All ports closed	3.3	0.40	3.4	0.27
		ABR connection	3.3	0.36	4.2	0.18
		PAB connection	4.5	0.28	3.4	0.30

*1: Effective cross-sectional area S and sonic conductance C are converted as S ≈ 5.0 × C.

Sensor specifications

Discrete specifications

Item		Positive pressure	Negative pressure *2
Working pressure *1		0 to 1.0 MPa	-100kPa to 0
Service voltage		10.8 to 30.0 VDC	
Current consumption		5 mA (24 VDC, no load)	
Pressure detection method		Diffused semiconductor pressure switch	
Ambient temperature		0 to 55°C	
Proof pressure		1.5 MPa	0.5 MPa
Degree of protection		Dust-proof	
Analog output	Output voltage	1 to 5V	
	Zero point voltage	1±0.1V	
	Linearity	±0.5% F.S. max	
	Temperature characteristics	±2% F.S. max	
	Output current	0.5mA max. (load resistance 10 kΩ)	
Wiring method		Connector connection	
Wire length		1000 mm	

Lead wire color and content

Line color	Description
Brown	Power supply (10.8 to 30.0 VDC)
Black	Analog output (1 to 5 V)
Blue	GND(0V)

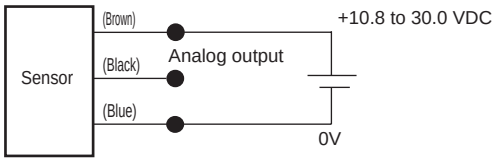

*1 Use the smaller working pressure range for the valve or pressure sensor.
*2 For negative pressure, only the single unit sensor is supported.

Analog output

● Positive pressure

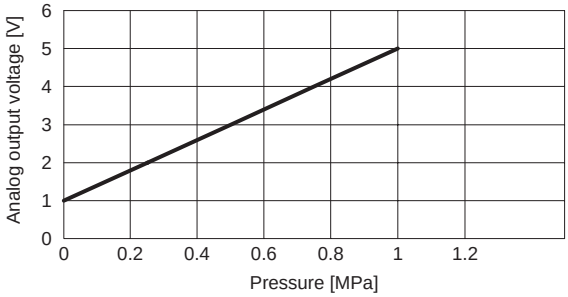

● Negative pressure

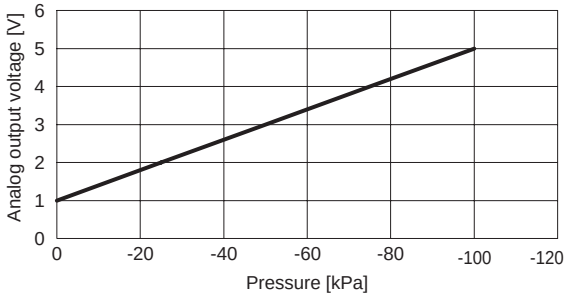

3GB1/2 / 4GB1/2/3 Series

Discrete valve; base piping

How to order

4GB1 1 0 R - 06 - E2 - 3

3GB1 66 0 R - 06 - E2 - 3

Discrete valve for integrated base

4GB1 1 9 R - 00 - E2 H - 3

3-port discrete valve for integrated base

3GB1 66 9 R - 00 - E2 H - 3

Ⓑ Solenoid position

Ⓐ Model No.

Ⓒ Port size

Ⓓ Electrical connections

For the circuit diagram with surge suppressor/lamp, refer to page 11.

Ⓔ Option

Ⓕ Voltage

Code	Item		Ⓐ Model No. 3GB1	3GB2	4GB1	4GB2	4GB3
Ⓑ Solenoid position							
1	2-position single				●	●	●
2	2-position double				●	●	●
3	3-position all ports closed				●	●	●
4	3-position ABR connection				●	●	●
5	3-position PAB connection				●	●	●
66	Two 3-port valves integrated (*1)	A side valve: Normally closed B side valve: Normally closed	●	●			
67	Two 3-port valves integrated (*1)	A side valve: Normally closed B side valve: Normally open	●	●			
76	Two 3-port valves integrated (*1)	A side valve: Normally open B side valve: Normally closed	●	●			
77	Two 3-port valves integrated (*1)	A side valve: Normally open B side valve: Normally open	●	●			
Ⓒ Port size							
Port	4(A)/2(B) port	Port P/R1/R2 (2) = Rc1/8 (3) = Rc1/4 (4) =Rc3/8					
06	Rc1/8		(2)		(2)		
08	Rc1/4			(3)		(3)	(3)
10	Rc3/8						(4)
Port	4(A)/2(B) port	Port P/R1/R2 (5) = 1/8NPT, (6) = 1/4NPT, (7) = 3/8NPT					
06N	NPT1/8 (*2)		(5)		(5)		
08N	NPT1/4 (*2)			(6)		(6)	(6)
10N	NPT3/8 (*2)						(7)
Port	4(A)/2(B) port	Port P/R1/R2 (8) = G1/8, (9) = G1/4					
06G	G1/8 (*2)		(8)		(8)		
08G	G1/4 (*2)			(9)		(9)	
00	Discrete valve for integrated base		●	●	●	●	●
Ⓓ Electrical connections							
Blank	Grommet lead wire (300 mm) (*8)		●	●	●	●	●
B	DIN terminal box (Pg7)	With surge suppressor/lamp (*9) (*11)		●		●	●
BN	DIN terminal box (Pg7) (no terminal box)	With surge suppressor (*9) (*11)		●		●	●
E-connector (upward/lateral common)							
E0	Lead wire (300 mm) (*10)		●	●	●	●	●
E00	Lead wire (500 mm) (*10)		●	●	●	●	●
E01	Lead wire (1000 mm) (*10)		●	●	●	●	●
E02	Lead wire (2000 mm) (*10)		●	●	●	●	●
E03	Lead wire (3000 mm) (*10)		●	●	●	●	●
E0N	Without lead wire (without socket) (*10)		●	●	●	●	●
E1	Without lead wire (socket/terminal included) (*10)		●	●	●	●	●
E2	Lead wire (300 mm)	With surge suppressor/lamp	●	●	●	●	●
E20	Lead wire (500 mm)	With surge suppressor/lamp	●	●	●	●	●
E21	Lead wire (1000 mm)	With surge suppressor/lamp	●	●	●	●	●
E22	Lead wire (2000 mm)	With surge suppressor/lamp	●	●	●	●	●
E23	Lead wire (3000 mm)	With surge suppressor/lamp	●	●	●	●	●
E2N	Without lead wire (without socket)	With surge suppressor/lamp	●	●	●	●	●
E3	Without lead wire (socket/terminal included)	with surge suppressor/lamp	●	●	●	●	●
EJ-connector (socket with cover, upward/lateral common)							
E01J	Lead wire (1000 mm) (*10)		●	●	●	●	●
E02J	Lead wire (2000 mm) (*10)		●	●	●	●	●
E03J	Lead wire (3000 mm) (*10)		●	●	●	●	●
E21J	Lead wire (1000 mm)	With surge suppressor/lamp	●	●	●	●	●
E22J	Lead wire (2000 mm)	With surge suppressor/lamp	●	●	●	●	●
E23J	Lead wire (3000 mm)	With surge suppressor/lamp	●	●	●	●	●
Ⓔ Option							
Blank	Non-locking/locking common manual override		●	●	●	●	●
M	Non-locking manual override		●	●	●	●	●
H	With exhaust check valve (*3)		●	●	●	●	●
K	External pilot				●	●	●
A	Ozone/coolant proof		●	●	●	●	●
S	Surgeless (*4)		●	●	●	●	●
E	Low exoergic/energy saving circuit (*4), (*5)		●	●	●	●	●
F	Port A/B filter built in (*6)		●	●	●	●	●
G1	With sensor (1-port detection type) (*12) (*13)				●	●	●
G2	With sensor (2-port detection type) (*13)		●	●	●	●	●
Ⓕ Voltage							
1	100 VAC (rectifier integrated)		●	●	●	●	●
2	200 VAC (rectifier integrated) (*7)			●		●	●
3	24 VDC		●	●	●	●	●
4	12 VDC		●	●	●	●	●
7	3 VDC		○	○	○	○	○
8	5 VDC		○	○	○	○	○

is not available.

○ indicates made to order.

⚠ Precautions for model No. selection

*1 : Not compatible when combined with external pilot (K).
Dimensions are the same as those of the respective 2-position double solenoid.

*2 : Made to order.

*3 : 3-position with all ports closed and PAB connection are not provided with the exhaust check valve.
Refer to page 851 for details on the exhaust check valve.

4 : E2 type and E2*J type connectors support 12/24 VDC only.
In addition, surgeless "S" and low exoergic/energy saving circuit "E" cannot be selected together.

*5 : Surgeless specifications.

*6 : A filter is built into port P as standard.

*7 : Only the DIN terminal box is supported.

*8 : The grommet lead wire specifications are compatible with DC voltage only.

*9 : AC voltages and 12/24 VDC are supported.
In addition, a lamp comes with the terminal box.

*10: AC voltage is with a rectifier circuit.

*11: The terminal box conforms to EN175301-803 Type C (former DIN 43650-C).
Details on pages 856 and 857.

*12: Single and double only.

*13: The pressure range is 0 to 0.7 MPa.

Electrical connections

Discrete valve/individual wiring manifold

Blank Grommet lead wire

● **Lead wire length**
300 mm

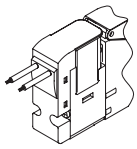

E1 E3 E-connector with socket/terminal

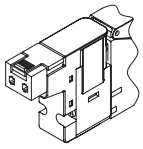

E0 E2 E-connector

● **Lead wire length**
300 mm
500 mm
1000 mm
2000 mm
3000 mm

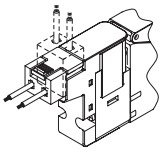

B DIN terminal box

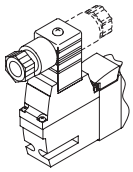

E0N E2N E-connector without socket

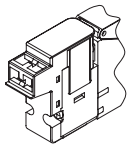

BN DIN terminal box Without terminal box

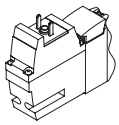

E0*J E2*J EJ-connector

● **Lead wire length**
1m
2m
3m

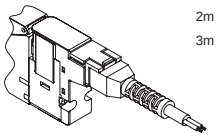

Ozone-proof specifications • Coolant proof specifications

Can be selected with "How to order" Item Ⓔ option "A" on page 352.

Specifications for rechargeable battery

(Catalog No. CC-1226A)

● For use in the rechargeable battery manufacturing process, materials used for air path and sliding section are limited

** - Voltage - **P4**

Clean-room specifications

● Anti-dust generation structure for use in cleanrooms

** - Voltage - **P7***

CE marking specifications

** - Voltage - **ST**

• Standard voltage of 24 VDC or less is CE marking-compatible even if the model No. is not indicated with "ST".

Dimensions

4GB110R

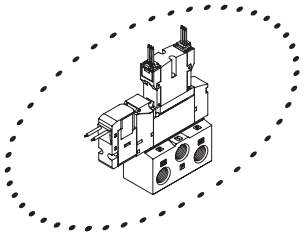

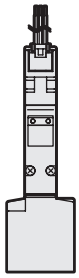

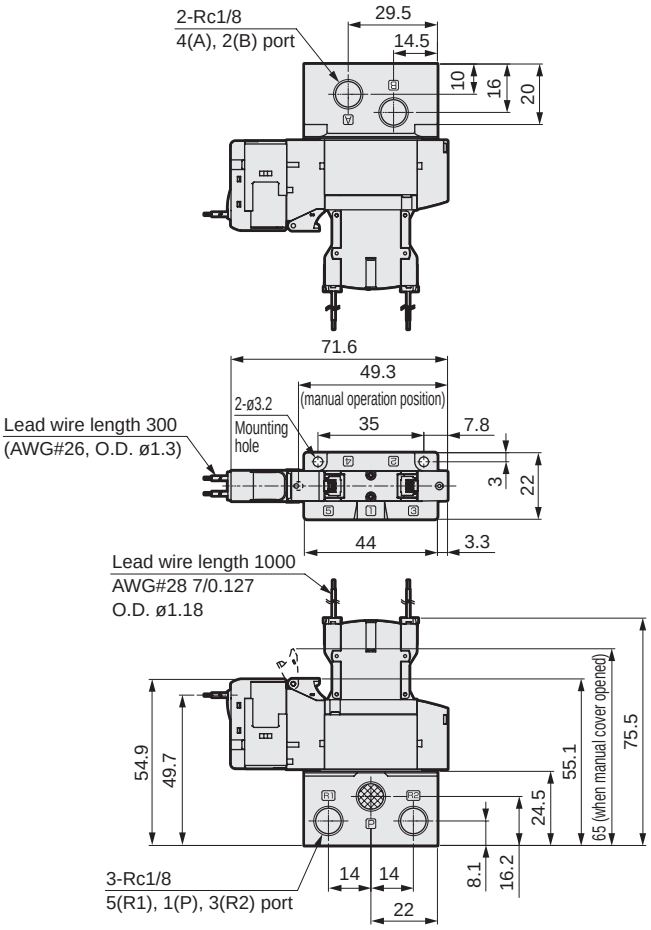

4GB210R

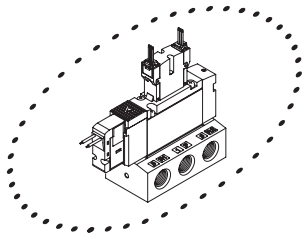

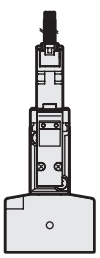

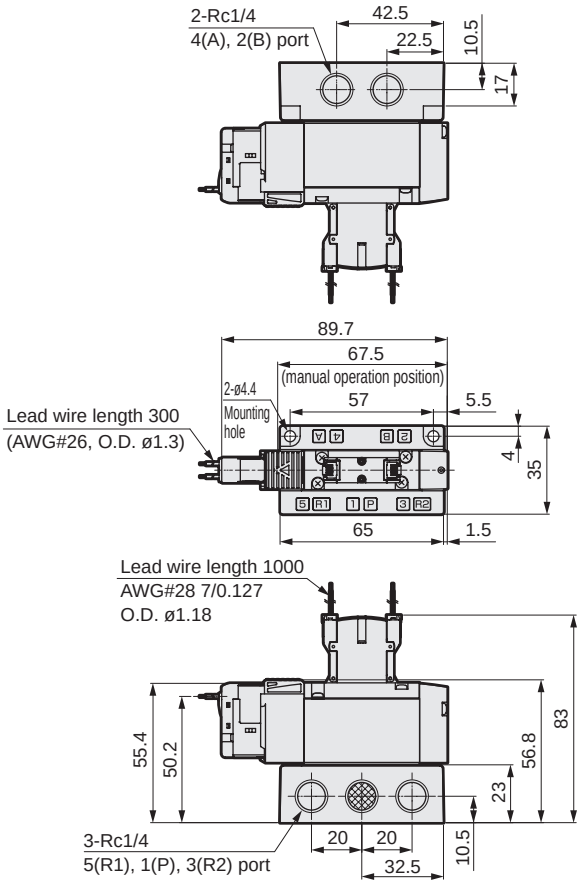

* Figure shows 2-position single: grommet lead wire.
For other dimensions, refer to pages 69 to 79, 86 to 89, and 92 to 95.

Dimensions

4GB310R

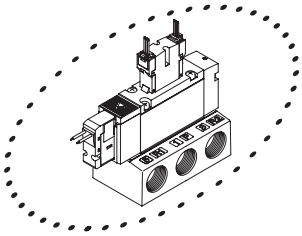

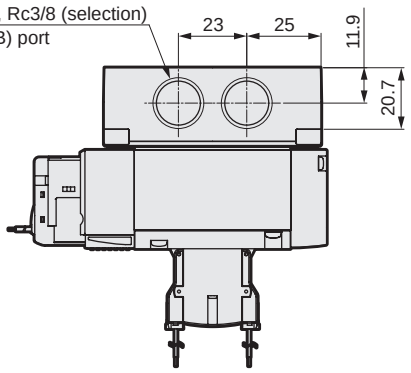

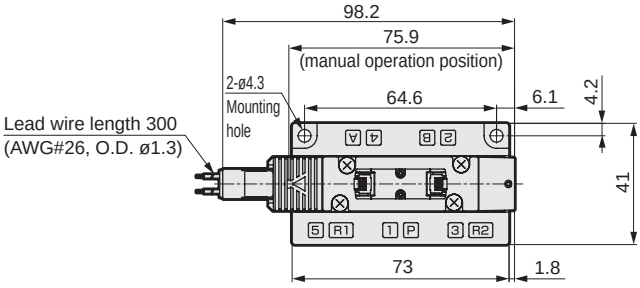

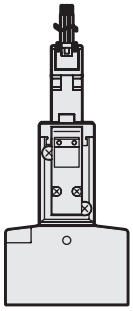

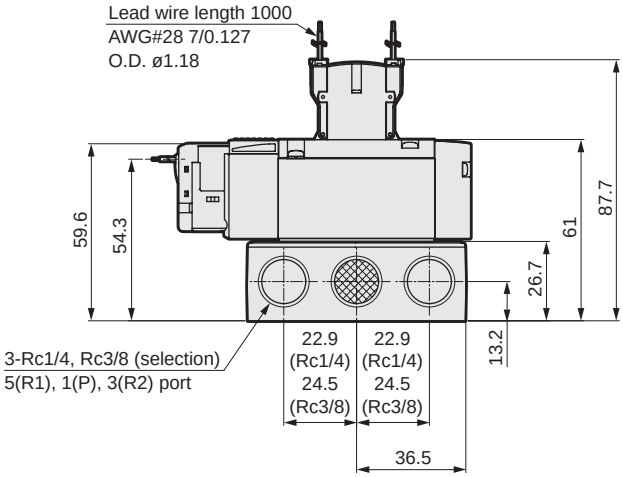

* Figure shows 2-position single: grommet lead wire.
For other dimensions, refer to pages 80 to 85, 90 and 91.

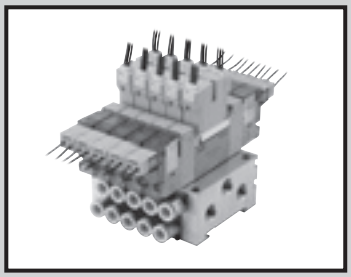

Individual wiring manifold
Base piping With pressure sensor
Direct mount/DIN rail mount

M3GB1/2 / M4GB1/2/3-(D) Series

● Applicable cylinder bore size: ø20 to ø100

CE RoHS CAD

JIS symbol

● Two 3-port valves integrated

(A side valve: NC, B side valve: NC)

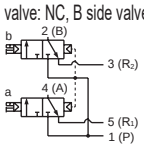

(A side valve: NC, B side valve: NO)

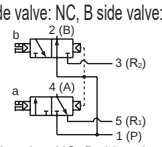

(A side valve: NO, B side valve: NC)

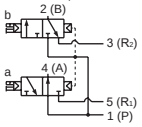

(A side valve: NO, B side valve: NO)

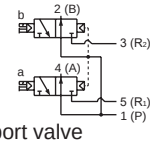

● 5-port valve

2-position single

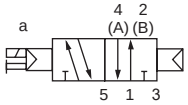

2-position double

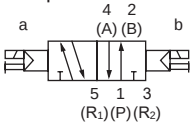

3-position
All ports closed

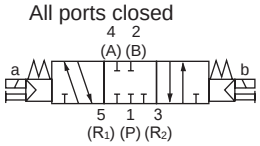

3-position A/B/R connection

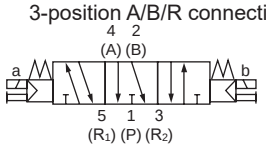

3-position P/A/B connection

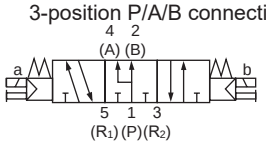

Manifold common specifications

1 MPa ≈ 145.0 psi, 1 MPa = 10 bar

Item		Description
Manifold		Integrated base
Mounting method		Direct mount/DIN rail mount
Air supply and exhaust method		Common supply/common exhaust (With internal exhaust check valve)
Pilot exhaust method	Internal pilot	Main valve/pilot valve common exhaust (Pilot exhaust check valve built-in)
	External pilot	Main valve/pilot valve individual exhaust
Piping direction		Side direction of base
Valve and operation		Pilot operated soft spool valve
Working fluid		Compressed air
Max. working pressure MPa		0.7 (≈101 psi, 7 bar)
Min. working pressure MPa		0.2 (≈29 psi, 2 bar) (*3)
Proof pressure MPa		1.05 (≈152 psi, 10 bar)
Ambient temperature °C		-5 (23°F) to 55 (131°F) (no freezing)
Fluid temperature °C		5 (41°F) to 55 (131°F)
Manual override		Non-locking/locking common (standard)
Lubrication (*1)		Not required
Degree of protection (*2)		Dust-proof
Vibration resistance m/s^2		50 or less
Shock resistance m/s^2		300 or less
Atmosphere		Cannot be used in corrosive gas environments

*1: Use turbine oil Class 1 ISO VG32 for lubrication. Excessive or intermittent lubrication results in unstable operation.
*2: Avoid water drops or oil, etc., during use. IP65 (water jet-proof) applies for DIN terminal box specifications. However, the specified outer diameter of the cord and tightening torque must be used for fixing in place.
*3: The working pressure range is 0 to 0.7 MPa when the external pilot (option code: K) is selected. Set the external pilot pressure between 0.2 and 0.7 MPa.

Electrical specifications

Item		Description					
Rated voltage V		24 DC	12 DC	5 DC	3 DC	100 AC	200 AC
Voltage fluctuation range		±10%					
Holding current A (*4)	Standard	0.015 (0.017)	0.030 (0.034)	0.072 (0.082)	0.120 (0.136)	0.009 (0.009)	0.006 (0.006)
	With low exoergic/energy saving circuit	0.005	0.010	-		-	
Power consumption W (*4)	Standard	0.35 (0.40)		0.35 (0.40)		-	
	With low exoergic/energy saving circuit	0.1		-		-	
Apparent power VA (*4) (*5)	Standard	-		-		0.93 (0.98)	1.40
Thermal class		B					
Surge suppressor		Option					
Indicator		Lamp (option)					

*4: Values in ( ) apply when lamp is included.In addition, the type with low exoergic/energy circuit is only available with lamp.
*5: 200 VAC is the value of DIN terminal box (with lamp).

Individual specifications

Item			M3GB1/M4GB1		M3GB2/M4GB2		M4GB3	
			Direct mount	DIN rail mount	Direct mount	DIN rail mount	Direct mount	DIN rail mount
Max. station No.		Standard (Internal pilot)	20 stations	16 stations	20 stations	16 stations	20 stations	16 stations
		External pilot	12 stations	12 stations				
Port size	Rc thread, M5	Port A/B	Barbed fitting ø1.8 Push-in fitting ø1.8, ø4, ø6 ø8 (*6) M5		Push-in fitting ø4, ø6, ø8 ø10 (*6) Rc1/8		Push-in fitting ø6, ø8, ø10 Rc1/4	
		Port P/R1/R2	Rc1/8		Rc1/4		Rc3/8	
	NPT thread, M5	Port A/B	Push-in fitting ø1/8", ø5/32" M5		Push-in fitting ø1/4", ø5/16" NPT1/8		Push-in fitting ø5/16", ø3/8" NPT1/4 (*6)	
		Port P/R1/R2	NPT1/8		NPT1/4		NPT3/8 (*6)	
	G thread, M5	Port A/B	Push-in fitting ø4, ø6 M5		Push-in fitting ø4, ø6, ø8 G1/8		-	
		Port P/R1/R2	G1/8		G1/4		-	
Manifold base Weight calculation formula (n: station No.) g		Standard	35n + 61	36n + 115	71n + 106	73n + 134	113n + 170	115n + 119
		External pilot	35n + 106	36n + 114	76n + 135	78n + 166	118n + 194	120n + 223

Refer to "Cautions for mounting the DIN rail" (page 854) before selection.
For 10 or over manifold station No. (5 stations for 4G3), use ports on both side for air supply and exhaust.
The manifold base weight is the value for screw specifications.
*6: Available as made to order.

Flow characteristics

Model No.	Solenoid position		P → A/B		A/B→R1/R2	
			C[dm³/(s·bar)]	b	C[dm³/(s·bar)]	b
M3GB1 M4GB1	Two 3-port valves integrated		0.86	0.35	1.1 (0.67)	0.22 (0.23)
	2-position		1.1	0.22	1.2 (0.70)	0.20 (0.10)
	3-position	All ports closed	0.98	0.22	1.1 -	0.24 -
		ABR connection	0.97	0.35	1.3 (0.68)	0.22 (0.24)
		PAB connection	1.1	0.38	1.1 -	0.21 -
M3GB2 M4GB2	Two 3-port valves integrated		1.7	0.44	2.1 (1.6)	0.32 (0.30)
	2-position		2.4	0.34	2.7 (1.7)	0.24 (0.31)
	3-position	All ports closed	2.2	0.34	2.4 -	0.29 -
		ABR connection	2.2	0.34	2.8 (1.8)	0.24 (0.27)
		PAB connection	2.4	0.29	2.4 -	0.29 -
M4GB3	2-position		3.5	0.34	3.8 (2.6)	0.11 (0.27)
	3-position	All ports closed	3.1	0.33	3.3 -	0.22 -
		ABR connection	3.0	0.30	3.8 (2.7)	0.11 (0.22)
		PAB connection	3.6	0.36	3.3 -	0.28 -

*1: Effective cross-sectional area S and sonic conductance C are converted as S ≈ 5.0 × C.
*2: Values in ( ) are with the exhaust check valve.

Sensor specifications

Discrete specifications

Item		Positive pressure	Negative pressure *2
Working pressure *1		0 to 1.0 MPa	-100kPa to 0
Service voltage		10.8 to 30.0 VDC	
Current consumption		5 mA (24 VDC, no load)	
Pressure detection method		Diffused semiconductor pressure switch	
Ambient temperature		0 to 55°C	
Proof pressure		1.5 MPa	0.5 MPa
Degree of protection		Dust-proof	
Analog output	Output voltage	1 to 5V	
	Zero point voltage	1±0.1V	
	Linearity	±0.5% F.S. max	
	Temperature characteristics	±2% F.S. max	
	Output current	0.5mA max. (load resistance 10 kΩ)	
Wiring method		Connector connection	
Wire length		1000 mm	

Lead wire color and content

Line color	Description
Brown	Power supply (10.8 to 30.0 VDC)
Black	Analog output (1 to 5 V)
Blue	GND(0V)

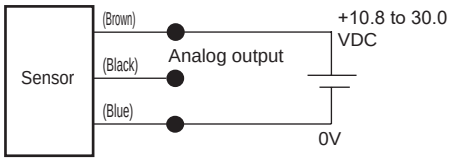

*1 Use the smaller working pressure range for the valve or pressure sensor.
*2 For negative pressure, only the single unit sensor is supported.

Analog output

● Positive pressure

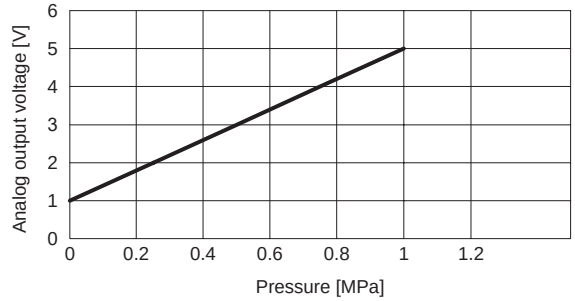

● Negative pressure

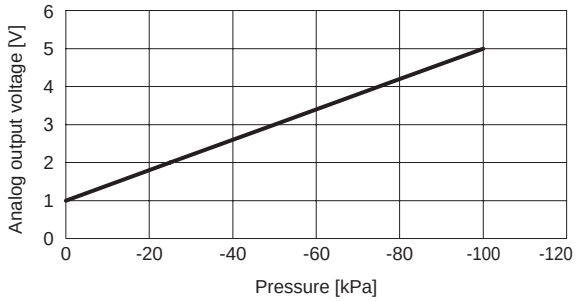

Ozone-proof specifications • **Coolant proof specifications**

Page 359 Select option "A" of Item Ⓔ in How to order.

Specifications for rechargeable battery (Catalog No. CC-1226A)

● For use in the rechargeable battery manufacturing process, materials used for air path and sliding section are limited

** - Voltage - **P4**

Clean-room specifications

● Anti-dust generation structure for use in cleanrooms

** - Voltage - **P7***

CE marking specifications

** - Voltage - **ST**

・Standard voltage of 24 VDC or less is CE marking-compatible even if the model No. is not indicated with "ST".

M4GB1/2/3 Series

Individual wiring manifold; base piping

How to order

Manifold model No.

M 4GB1 1 0R - C6 - E2 H D - ○ - 3

3-port manifold model No.

M 3GB1 66 0R - C6 - E2 H D - ○ - 3

● Discrete valve for mounting base

4GB1 1 9R - 00 - E2 H — 3

● 3-port discrete valve for mounting base

3GB1 66 9R - 00 - E2 H — 3

- A Model No.
- B Solenoid position
- C Port size (*3) (*4)
- D Electrical connections
- E Option
- F Mounting
- G Station No.
- H Voltage

* Be sure to fill in the "Manifold specifications sheet" (pages 422 to 424).

Code	Description		A Model No. 3GB1	3GB2	4GB1	4GB2	4GB3
B Solenoid position							
1	2-position single				●	●	●
2	2-position double				●	●	●
3	3-position all ports closed				●	●	●
4	3-position ABR connection				●	●	●
5	3-position PAB connection				●	●	●
66	Two 3-port valves integrated (*1) (*2)	A valve side: Normally closed B valve side: Normally closed	●	●			
67		A valve side: Normally closed B valve side: Normally open	●	●			
76		A valve side: Normally open B valve side: Normally closed	●	●			
77		A valve side: Normally open B valve side: Normally open	●	●			
8	Mix manifold (for multiple solenoid positions)		●	●	●	●	●

C Port size Port	4(A)/2(B) port		Port P/R1/R2 (2) = Rc1/8 (3) = Rc1/4 (4) =Rc3/8				
CF	ø1.8 barbed fitting (compatible tube UP-9102-**)		(2)		(2)		
C18	ø1.8 push-in fitting (compatible tube UP-9402-**)		(2)		(2)		
C4	ø4 push-in fitting		(2)	(3)	(2)	(3)	
C6	ø6 push-in fitting		(2)	(3)	(2)	(3)	(4)
C8	ø8 push-in fitting	(*5) (*6)	(2)	(3)	(2)	(3)	(4)
C10	ø10 push-in fitting	(*5) (*6)		(3)		(3)	(4)
CL18	ø1.8 push-in L-fitting upward (compatible tube UP-9402-**)				(2)		
CL4	ø4 push-in L-fitting (upward)				(2)		
CL6	ø6 push-in L-fitting (upward)				(2)	(3)	
CL8	ø8 push-in L-fitting (upward)					(3)	(4)
CL10	ø10 push-in L-fitting (upward)						(4)
CD18	ø1.8 push-in L-fitting downward (compatible tube UP-9402-**)		(2)		(2)		
CD4	ø4 push-in L-fitting (downward)		(2)		(2)		
CD6	ø6 push-in L-fitting (downward)		(2)	(3)	(2)	(3)	
CD8	ø8 push-in L-fitting (downward)			(3)		(3)	(4)
CD10	ø10 push-in L-fitting (downward)						(4)
CX	Push-in fitting mix		(2)	(3)	(2)	(3)	(4)
M5	M5		(2)		(2)		
06	Rc1/8			(3)		(3)	
08	Rc1/4						(4)
Port	4(A)/2(B) port		Port P/R1/R2 (5) = 1/8NPT, (6) = 1/4NPT, (7) = 3/8NPT				
C3N	ø1/8" push-in fitting		(5)		(5)		
C4N	ø5/32" push-in fitting		(5)		(5)		
C6N	ø1/4" push-in fitting			(6)		(6)	
C8N	ø5/16" push-in fitting			(6)		(6)	(7)
C10N	ø3/8" push-in fitting						(7)
CL3N	ø1/8" push-in L-fitting upward	(*6)			(5)		
CL4N	ø5/32" push-in L-fitting upward	(*6)			(5)		
CL6N	ø1/4" push-in L-fitting upward	(*6)				(6)	
CL8N	ø5/16" push-in L-fitting upward	(*6)				(6)	
CXN	Push-in fitting mix		(5)	(6)	(5)	(6)	(7)
M5N	M5		(5)		(5)		
06 N	NPT1/8			(6)		(6)	
08 N	NPT1/4	(*6)					(7)
Port	4(A)/2(B) port		Port P/R1/R2 (8) = G1/8, (9) = G1/4				
C4G	ø4 push-in fitting		(8)	(9)	(8)	(9)	
C6G	ø6 push-in fitting		(8)	(9)	(8)	(9)	
C8G	ø8 push-in fitting			(9)		(9)	
CL4G	ø4 push-in L-fitting upward	(*6)			(8)		
CL6G	ø6 push-in L-fitting upward	(*6)			(8)	(9)	
CL8G	ø8 push-in L-fitting upward	(*6)				(9)	
CXG	Push-in fitting mix		(8)	(9)	(8)	(9)	
M5G	M5		(8)		(8)		
06G	G1/8			(9)		(9)	
00	Discrete valve for integrated base		●	●	●	●	●

Precautions for model No. selection

*1 : Select M4GB*80R when mixing with 3, 5-port valves.
Further, select M3GB*80R when mixing with masking plate.

*2 : Not compatible when combined with external pilot (K).
Dimensions are the same as those of the respective 2-position double solenoid.

3 : CL push-in L fitting is compatible only with the single solenoid manifold. Long elbow is for port A and short elbow for port B.

*4 : Port A/B sizes are the same for the push-in L fitting (upward) (downward).

*5 : 4G1 C8 and 4G2 C10 do not support push-in fitting mixing.

*6 : Made to order.

			Ⓐ Model No.				
			3GB1	3GB2	4GB1	4GB2	4GB3
Ⓓ Electrical connections							
Blank	Grommet lead wire (300 mm)	(*17)	●	●	●	●	●
B	DIN terminal box (Pg7)	with surge suppressor/lamp (*18) (*20)		●		●	●
BN	DIN terminal box (Pg7) (no terminal box)	With surge suppressor (*18) (*20)		●		●	●
E-connector (upward/lateral common)							
E0	Lead wire (300 mm)	(*19)	●	●	●	●	●
E00	Lead wire (500 mm)	(*19)	●	●	●	●	●
E01	Lead wire (1000 mm)	(*19)	●	●	●	●	●
E02	Lead wire (2000 mm)	(*19)	●	●	●	●	●
E03	Lead wire (3000 mm)	(*19)	●	●	●	●	●
E0N	Without lead wire (no socket)	(*19)	●	●	●	●	●
E1	Without lead wire (socket/terminal included)	(*19)	●	●	●	●	●
E2	Lead wire (300 mm)	With surge suppressor/lamp	●	●	●	●	●
E20	Lead wire (500 mm)	With surge suppressor/lamp	●	●	●	●	●
E21	Lead wire (1000 mm)	With surge suppressor/lamp	●	●	●	●	●
E22	Lead wire (2000 mm)	With surge suppressor/lamp	●	●	●	●	●
E23	Lead wire (3000 mm)	With surge suppressor/lamp	●	●	●	●	●
E2N	Without lead wire (without socket)	With surge suppressor/lamp	●	●	●	●	●
E3	Without lead wire (socket/terminal included)	With surge suppressor/lamp	●	●	●	●	●
EJ-connector (socket with cover, upward/lateral common)							
E01J	Lead wire (1000 mm)	(*19)	●	●	●	●	●
E02J	Lead wire (2000 mm)	(*19)	●	●	●	●	●
E03J	Lead wire (3000 mm)	(*19)	●	●	●	●	●
E21J	Lead wire (1000 mm)	With surge suppressor/lamp	●	●	●	●	●
E22J	Lead wire (2000 mm)	With surge suppressor/lamp	●	●	●	●	●
E23J	Lead wire (3000 mm)	With surge suppressor/lamp	●	●	●	●	●
Ⓔ Option							
Blank	Non-locking/locking common manual override		●	●	●	●	●
M	Non-locking manual override		●	●	●	●	●
H	With exhaust check valve	(*7)	●	●	●	●	●
K	External pilot	(*8)	●	●	●	●	●
A	Ozone/coolant proof		●	●	●	●	●
S	Surgeless	(*9)	●	●	●	●	●
E	Low exoergic/energy saving circuit	(*9) (*10)	●	●	●	●	●
F	A/B port filter integrated	(*11)	●	●	●	●	●
G1	With sensor (1-port detection type)	(*21) (*22)			●	●	●
G2	With sensor (2-port detection type)	(*22)	●	●	●	●	●
Z1	Air supply spacer	(*12)	●	●	●	●	●
Z2	In-stop valve spacer	(*12) (*13)	●	●	●	●	●
Z3	Exhaust spacer	(*12)	●	●	●	●	●
Z6	Spacer pilot check valve	(*12) (*14)				●	
Ⓕ Mounting							
Blank	Direct mount	(*15)	●	●	●	●	●
D	DIN rail mount		●	●	●	●	●
Ⓖ Station No.							
2	2 stations		●	●	●	●	●
to	to						
20	Refer to page 356 for the max. station No. per model.						
Ⓗ Voltage							
1	100 VAC (rectifier integrated)		●	●	●	●	●
2	200 VAC (rectifier integrated)	(*16)		●		●	●
3	24 VDC		●	●	●	●	●
4	12 VDC		●	●	●	●	●
7	3 VDC		○	○	○	○	○
8	5 VDC		○	○	○	○	○

is not available.

○ indicates made to order.

*7 : 3-position all ports closed and PAB connection are not provided with the exhaust check valve specifications (H).
Refer to page 851 for details on the exhaust check valve.
*8 : Consult with CKD when using vacuum with external pilot (K).
9 : E2 and E2*J connectors support 12/24 VDC only.
In addition, surgeless "S" and low exoergic/energy saving circuit "E" cannot be selected together.
*10: Surgeless specifications.
*11: A filter is built into port P as standard.
*12: Specify the spacer mounting position and quantity on the manifold specifications sheet.
Stacking of spacers is not possible.
Combination with the masking plate is not supported.
For details, refer to page 188 to page 192.

*13: Not compatible in combination with external pilot (K).
*14: Combination with push-in L fittings (upward) is not supported.
*15: Direct mount M4GB1 cannot be changed to DIN rail mount after purchase.
*16: Only the DIN terminal box is supported.
*17: The grommet lead wire specifications are compatible with DC voltage only.
*18: AC voltages and 12/24 VDC are supported. In addition, a lamp comes with the terminal box.
*19: AC voltage includes a rectifier circuit.
*20: The terminal box conforms to EN175301-803 Type C (former DIN 43650-C). Details on pages 856 and 857.
*21: Single and double only.
*22: The pressure range is 0 to 0.7 MPa.

Electrical connections

Discrete valve/individual wiring manifold

Blank Grommet lead wire

● **Lead wire length**
300 mm

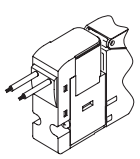

E1 E3 E-connector with socket/terminal

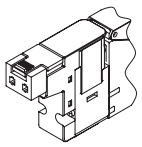

E0 E2 E-connector

● **Lead wire length**
300 mm
500 mm
1000 mm
2000 mm
3000 mm

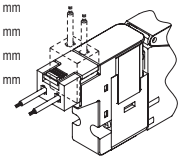

B DIN terminal box

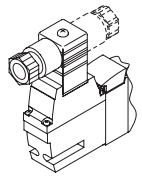

E0N E2N E-connector without socket

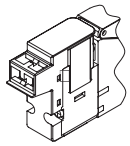

BN DIN terminal box (without terminal box)

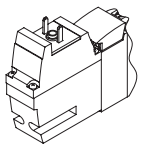

E0*J E2*J EJ-connector

● **Lead wire length**
1 m
2 m
3 m

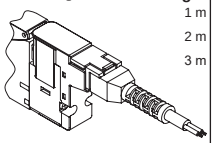

Manifold configuration explanation and parts list

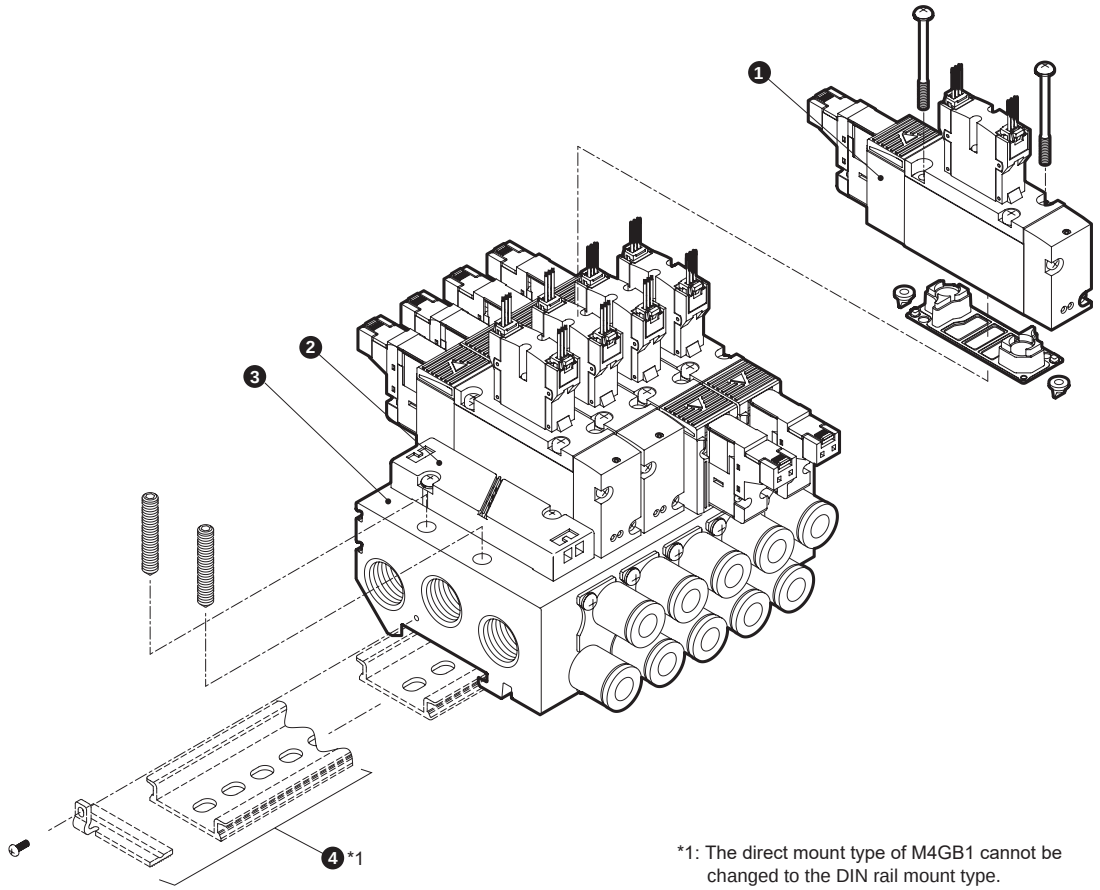

*1: The direct mount type of M4GB1 cannot be changed to the DIN rail mount type.

Main parts list

No.	Component name		Model No.	Description	Remarks
1	Discrete valve for integrated base		4GB □□9R - 00 - Electrical connections / Option - Voltage; Solenoid position; Series flow rate size	Discrete valve Gasket 2 mounting screws 2 PR check valves	Details on page 114
2	Masking plate	3G1/4G1	4G1R-MP	Masking plate Gasket 2 mounting screws	* 4G3R-MP has two PR check valves included.
		3G2/4G2	4G2R-MP		
		3G3/4G3	4G3R-MP		
3	Manifold base assembly		M4GB □R - Port size - Option D - Station No.; Series flow rate size; Mounting	Manifold base	Only M4GB1R mounting can be selected. Direct mount/DIN rail mount are common for M4GB2R and M4GB3R. DIN rail kit must be ordered separately.
4	DIN rail kit		4GB □R-BAA Rail length - Option D; Series flow rate size		Details on page 200

Parts list

No.	Part name	Model No.
–	Coil assembly	4GR-[Electrical connections]-□-COIL-[Voltage] Blank: Standard A: Ozone/coolant proof S: Surgeless E: Low exoergic/energy circuit K: External pilot Page 359 Ⓓ Select from Electrical connections
–	E-connector socket assembly	4GR-SOCKET-ASSY-[Electrical connections]-[Voltage]
–	EJ-connector socket assembly	4GR-SOCKET-ASSY-[Electrical connections]

No.	Part name			Model No.
–	Cartridge push-in fitting and related parts	4G1	ø1.8 barbed	4G1R-JOINT-CF
			ø1.8 straight	4G1R-JOINT-C18
			ø4 straight	4G1R-JOINT-C4
			ø6 straight	4G1R-JOINT-C6
			ø8 straight (*1)	4G1R-JOINT-C8
			ø1.8 elbow	4G1R-JOINT-CL18, CLL18
			ø4 elbow	4G1R-JOINT-CL4, CLL4
			ø6 elbow	4G1R-JOINT-CL6, CLL6
			ø1/8" straight	4G1R-JOINT-C3N
			ø5/32" straight	4G1R-JOINT-C4N
			ø1/8" elbow (*2)	4G1R-JOINT-CL3N, CLL3N
			ø5/32" elbow (*2)	4G1R-JOINT-CL4N, CLL4N
			Plug cartridge	4G1R-JOINT-CPG
		4G2	ø4 straight	4G2R-JOINT-C4
			ø6 straight	4G2R-JOINT-C6
			ø8 straight	4G2R-JOINT-C8
			ø10 straight (*3)	4G2R-JOINT-C10
			ø6 elbow	4G2R-JOINT-CL6, CLL6
			ø8 elbow	4G2R-JOINT-CL8, CLL8
			ø1/4" straight	4G2R-JOINT-C6N
			ø5/16" straight	4G2R-JOINT-C8N
			ø1/4" elbow (*2)	4G2R-JOINT-CL6N, CLL6N
			ø5/16" elbow (*2)	4G2R-JOINT-CL8N, CLL8N
			Plug cartridge	4G2R-JOINT-CPG
		4G3	ø6 straight	4G3R-JOINT-C6
			ø8 straight	4G3R-JOINT-C8
			ø10 straight	4G3R-JOINT-C10
			ø8 elbow	4G3R-JOINT-CL8, CLL8
			ø10 elbow	4G3R-JOINT-CL10, CLL10
			ø5/16" straight	4G3R-JOINT-C8N
			ø3/8" straight	4G3R-JOINT-C10N

*1: Dedicated part for M4GB1-C8.
*2: Made to order.
*3: Common product with the 4G3 ø10 straight.

Dimensions

M4GB1

● Direct mount installation
Grommet lead wire (blank)

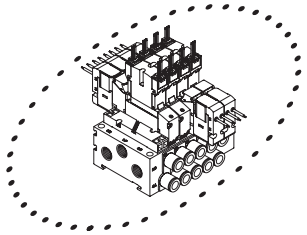

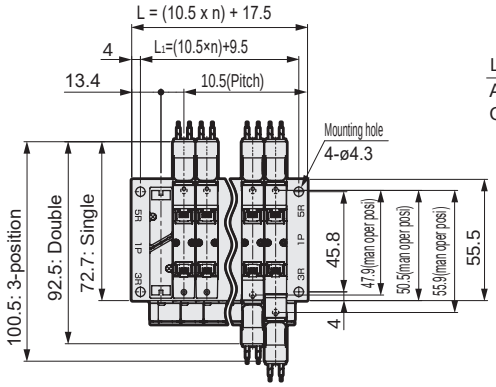

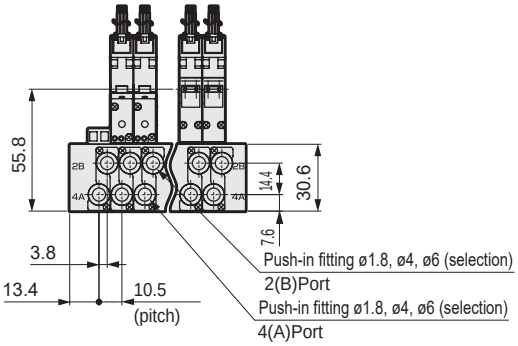

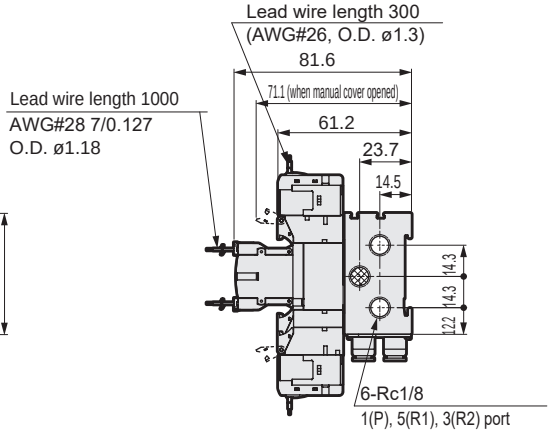

● DIN rail installation (D)
Grommet lead wire (blank)

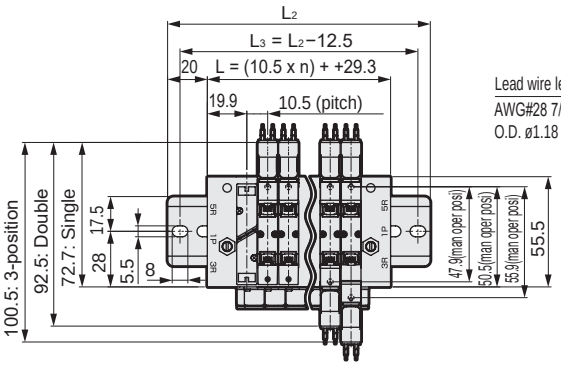

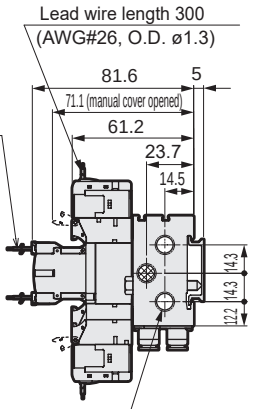

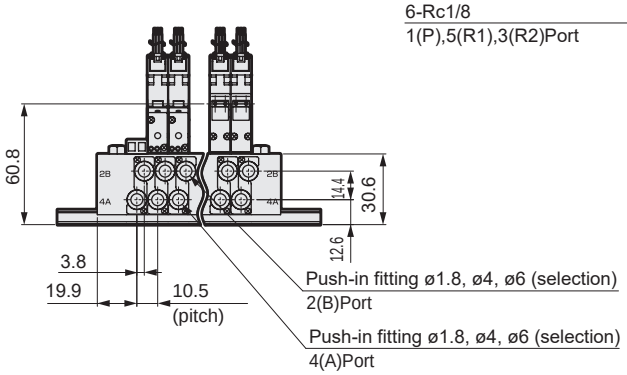

● E-connector (E)

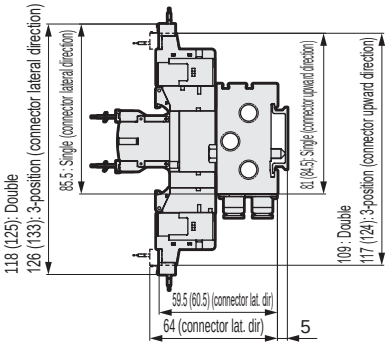

● EJ type connector (E**J)

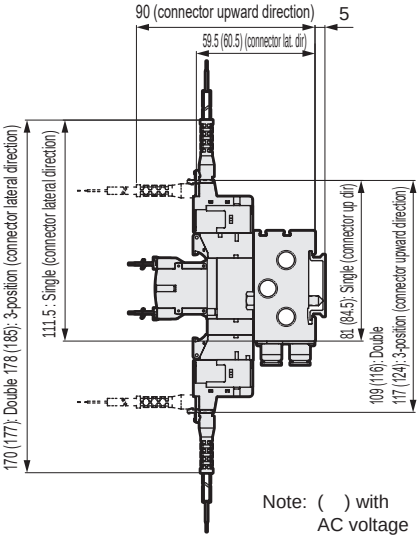

Note: ( ) with AC voltage

Station No.		2	3	4	5	6	7	8	9	10	11	12	13	14	15	16	17	18	19	20
Direct Mount Mounting	L	38.5	49.0	59.5	70.0	80.5	91.0	101.5	112.0	122.5	133.0	143.5	154.0	164.5	175.0	185.5	196.0	206.5	217.0	227.5
	L_1	30.5	41.0	51.5	62.0	72.5	83.0	93.5	104.0	114.5	125.0	135.5	146.0	156.5	167.0	177.5	188.0	198.5	209.0	219.5
DIN Rail Mounting	L	50.3	60.8	71.3	81.8	92.3	102.8	113.3	123.8	134.3	144.8	155.3	165.8	176.3	186.8	197.3				
	L_2	100.0	112.5	112.5	125.0	137.5	150.0	162.5	175.0	175.0	187.5	200.0	212.5	225.0	237.5	237.5				
	L_3	87.5	100.0	100.0	112.5	125.0	137.5	150.0	162.5	162.5	175.0	187.5	200.0	212.5	225.0	225.0				

Dimensions

M4GB2

● Grommet lead wire (blank)

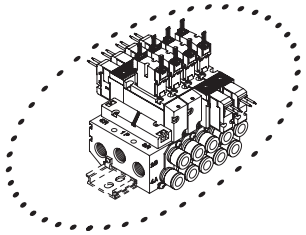

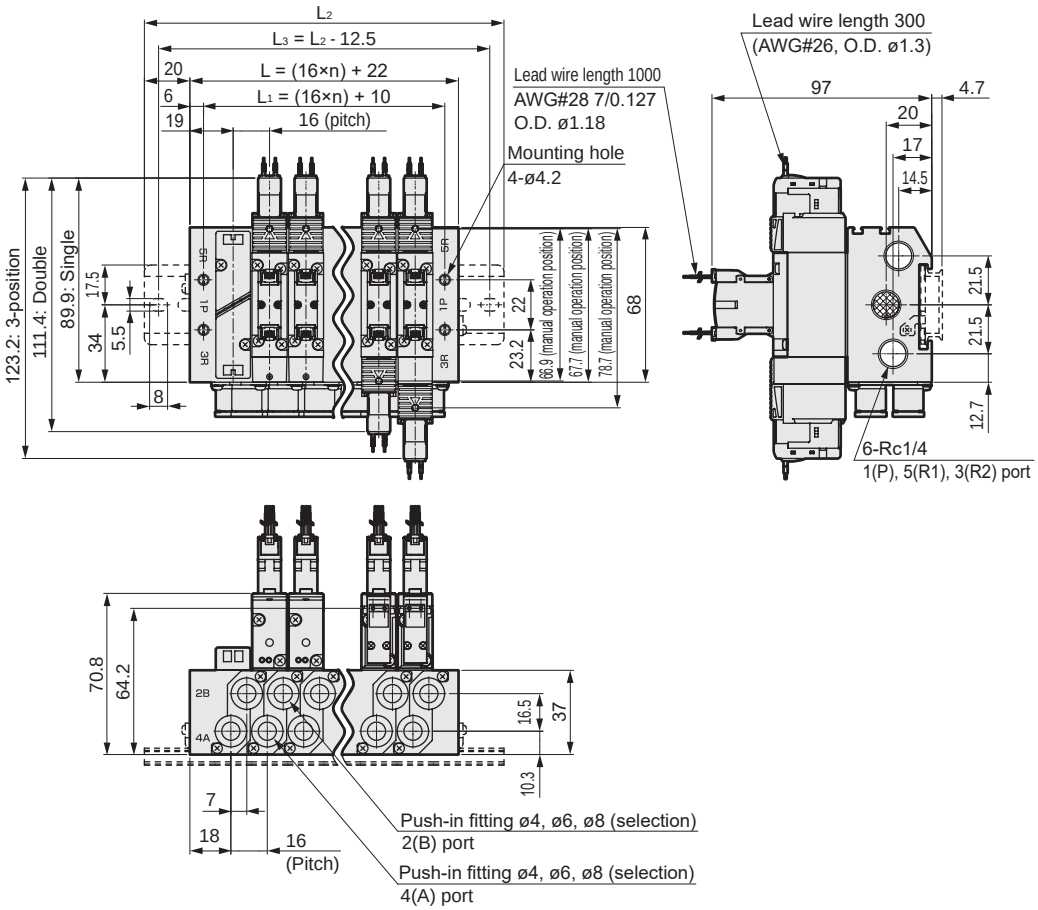

● E-connector (E)

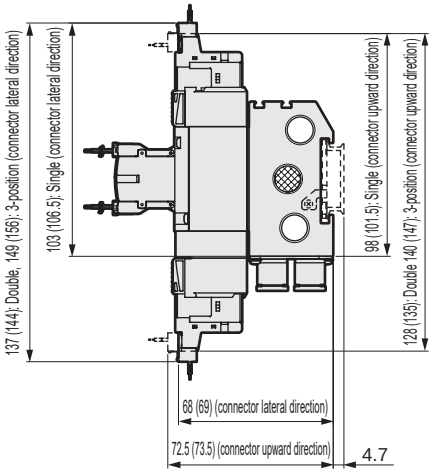

● EJ-connector (E**J)

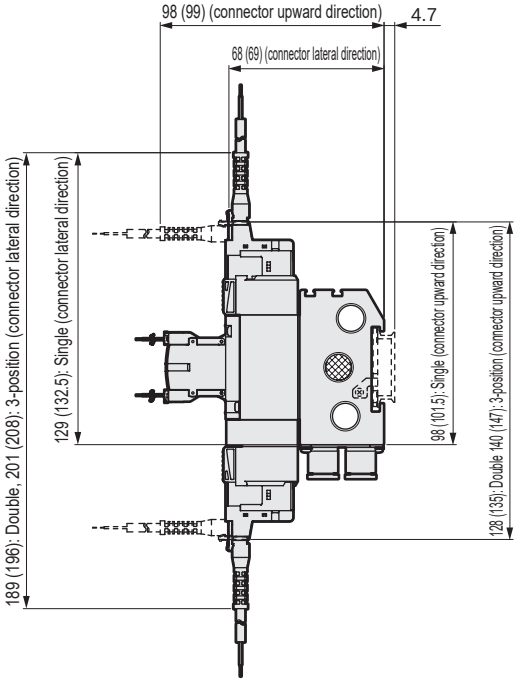

Note: Values in ( ) for AC voltage

Station No.	2	3	4	5	6	7	8	9	10	11	12	13	14	15	16	17	18	19	20
L	54.0	70.0	86.0	102.0	118.0	134.0	150.0	166.0	182.0	198.0	214.0	230.0	246.0	262.0	278.0	294.0	310.0	326.0	342.0
L_1	42.0	58.0	74.0	90.0	106.0	122.0	138.0	154.0	170.0	186.0	202.0	218.0	234.0	250.0	266.0	282.0	298.0	314.0	330.0
L_2	100.0	112.5	137.5	150.0	162.5	175.0	200.0	212.5	225.0	250.0	262.5	275.0	287.5	312.5	325.0				
L_3	87.5	100.0	125.0	137.5	150.0	162.5	187.5	200.0	212.5	237.5	250.0	262.5	275.0	300.0	312.5				

Dimensions

M4GB3

● Grommet lead wire (blank)

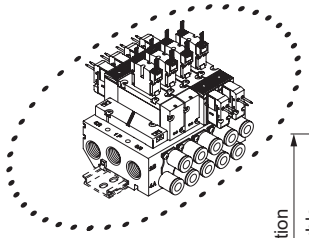

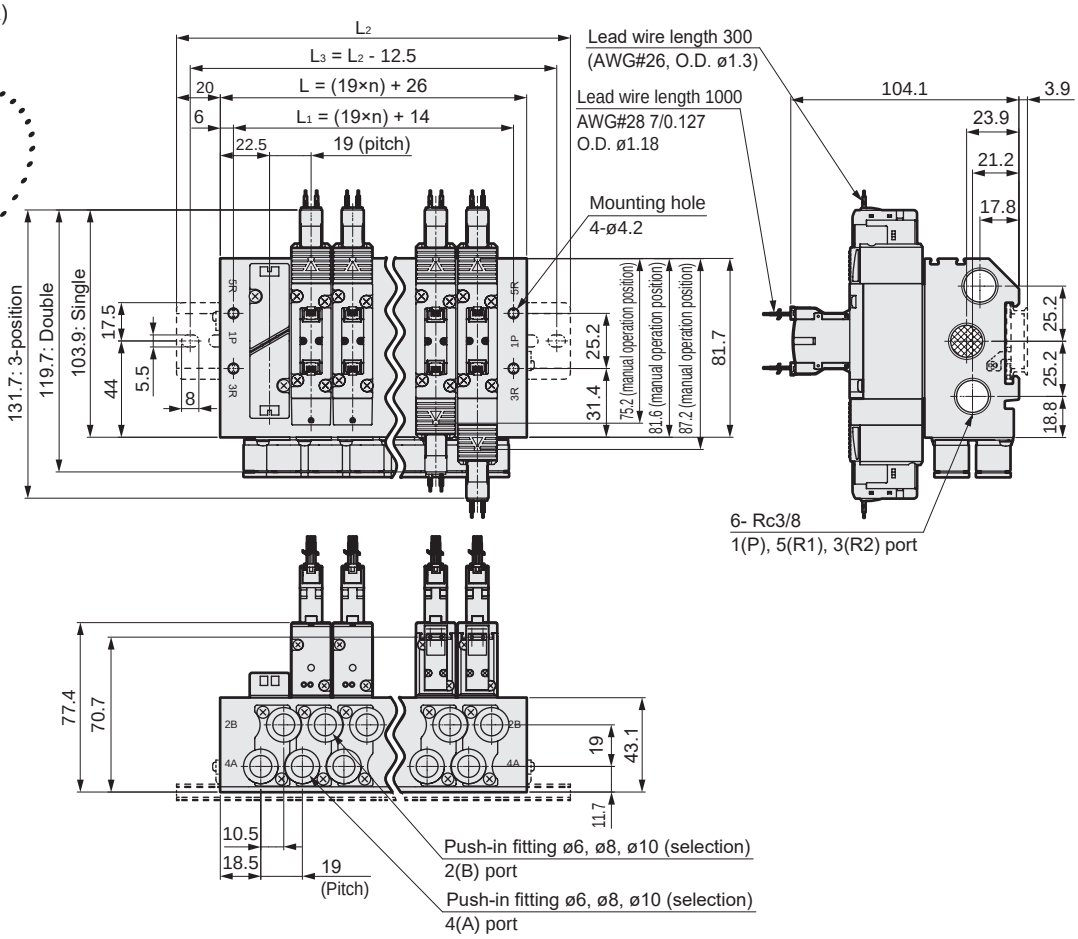

● E-connector (E)

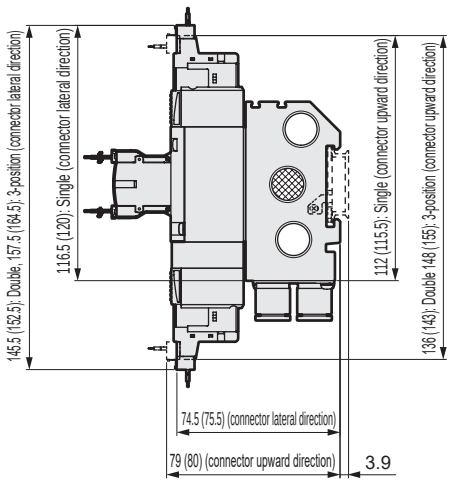

● EJ-connector (E**J)

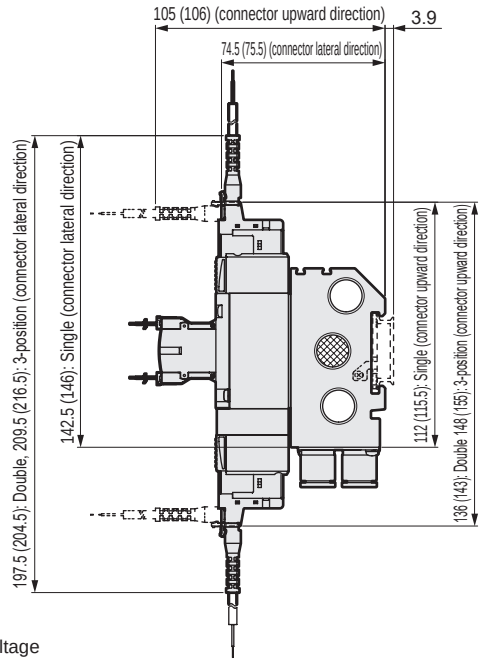

Note: Values in ( ) for AC voltage

Station No.	2	3	4	5	6	7	8	9	10	11	12	13	14	15	16	17	18	19	20
L	64.0	83.0	102.0	121.0	140.0	159.0	178.0	197.0	216.0	235.0	254.0	273.0	292.0	311.0	330.0	349.0	368.0	387.0	406.0
L_1	52.0	71.0	90.0	109.0	128.0	147.0	166.0	185.0	204.0	223.0	242.0	261.0	280.0	299.0	318.0	337.0	356.0	375.0	394.0
L_2	112.5	125.0	150.0	162.5	187.5	200.0	225.0	237.5	262.5	275.0	300.0	325.0	337.5	362.5	375.0				
L_3	100.0	112.5	137.5	150.0	175.0	187.5	212.5	225.0	250.0	262.5	287.5	312.5	325.0	350.0	362.5				

MEMO

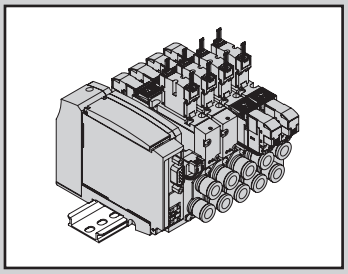

Reduced wiring manifold
Base piping
Direct mount/DIN rail mount
With pressure sensor

M3GB1/2-T* (D) Series
M4GB1/2/3-T* (D) Series

● Applicable cylinder bore size: ø20 to ø100

RoHS CAD

JIS symbol

● Two 3-port valves integrated

(A side valve: NC, B side valve: NC)

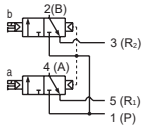

(A side valve: NC, B side valve: NO)

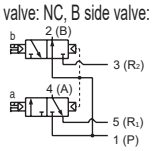

(A side valve: NO, B side valve: NC)

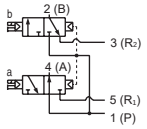

(A side valve: NO, B side valve: NO)

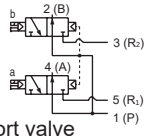

● 5-port valve

2-position single

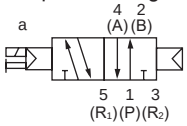

2-position double

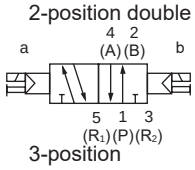

3-position
All ports closed

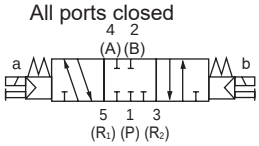

3-position A/B/R connection

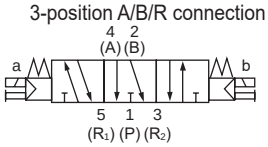

3-position P/A/B connection

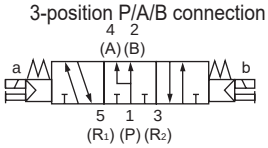

Manifold common specifications

1 MPa ≈ 145.0 psi, 1 MPa = 10 bar

Item		Description
Manifold		Reduced wiring integrated base
Mounting method		Direct mount/DIN rail mount
Air supply and exhaust method		Common supply/common exhaust (With internal exhaust check valve)
Pilot exhaust method	Internal pilot	Main valve/pilot valve common exhaust (Pilot exhaust check valve built-in)
	External pilot	Main valve/pilot valve individual exhaust
Piping direction		Side direction of base
Valve and operation		Pilot operated soft spool valve
Working fluid		Compressed air
Max. working pressure MPa		0.7 (≈101 psi, 7 bar)
Min. working pressure MPa		0.2 (≈29 psi, 2 bar) (*3)
Proof pressure MPa		1.05 (≈152 psi, 10 bar)
Ambient temperature °C		-5 (23°F) to 55 (131°F) (no freezing)
Fluid temperature °C		5 (41°F) to 55 (131°F)
Manual override		Non-locking/locking common (standard)
Lubrication (*1)		Not required
Degree of protection (*2)		Dust-proof
Vibration resistance m/s²		50 or less
Impact resistance m/s²		300 or less
Atmosphere		Cannot be used in corrosive gas environments

Electrical specifications

Item		Description		
Rated voltage V		T1□, T30□, T5□		T6G1, T8□
		24 DC	12 DC	24 DC
Voltage fluctuation range (*4)		±10%		+10%, -5%
Holding current A	Standard	0.017	0.034	0.017
	With low exoergic/ energy circuit	0.005	0.010	0.005
Power consumption W	Standard	0.4		
	With low exoergic/ energy circuit	0.1		
Thermal class		B		
Surge suppressor (*5)		Zener diode		
Indicator		LED		

*1: Use turbine oil Class 1 ISO VG32 for lubrication. Excessive or intermittent lubrication results in unstable operation.
*2: Avoid water drops or oil, etc., during use.
*3: The working pressure range is 0 to 0.7 MPa when the external pilot (option code: K) is selected. Set the external pilot pressure between 0.2 and 0.7 MPa.
*4: T6G1 and T8□ (serial transmission) may experience voltage drops due to internal circuitry, so care should be taken with the voltage fluctuation range.
*5: When selecting low exoergic/energy saving circuit or surgeless, a diode will be used.

Common specifications

Item		M3GB1/M4GB1	M3GB2/M4GB2	M3GB3/M4GB3
Port size	Port A/B	Barbed fitting ø1.8 Push-in fitting ø1.8, ø4, ø6, ø8 (*6) M5	Push-in fitting ø4, ø6, ø8, ø10 (*6) Rc1/8	Push-in fitting ø6, ø8, ø10 Rc1/4
	Port P/R1/R2	Rc1/8	Rc1/4	Rc3/8

*6: Available as made to order.

T1 □, T30 □, T5 □

Item		M3GB1/M4GB1		M3GB2/M4GB2		M3GB3/M4GB3	
		Direct mount	DIN rail mount	Direct mount	DIN rail mount	Direct mount	DIN rail mount
Max. station No.	Standard (Internal pilot)	20 stations	16 stations	20 stations	16 stations	16 stations	
	External pilot	12 stations					
Manifold base weight	Standard	43n + 335	45n + 348	80n + 398	82n + 431	124n + 548	126n + 582
Weight calculation formula (n: station No.) g	External pilot	44n + 330	46n + 344	88n + 433	90n + 467	129n + 577	131n + 606

T6G1

Item		M3GB1/M4GB1	M3GB2/M4GB2	M3GB3/M4GB3
		DIN rail mount	DIN rail mount	DIN rail mount
Max. station No.	Standard (Internal pilot)	16 stations	16 stations	16 stations
	External pilot	12 stations		
Manifold base weight	Standard	45n + 495	82n + 578	126n + 729
Weight calculation formula (n: station No.) g	External pilot	46n + 491	90n + 615	131n + 753

T8 □

Item		M3GB1/M4GB1		M3GB2/M4GB2		M3GB3/M4GB3	
		Direct mount	DIN rail mount	Direct mount	DIN rail mount	Direct mount	DIN rail mount
Max. station No.	Standard (Internal pilot)	20 stations	16 stations	20 stations	16 stations	16 stations	
	External pilot	12 stations					
Manifold base weight	Standard	46n + 305	49n + 332	83n + 318	86n + 350	128n + 384	132n + 416
Weight calculation formula (n: station No.) g	External pilot	48n + 312	51n + 339	91n + 336	94n + 368	146n + 417	150n + 449

The manifold base weight is the value for screw connection specifications with DIN rail, wiring block or device unit.
Note that the maximum number of stations in the manifold is also limited by the maximum number of solenoid points per wiring specification as shown on the right.

Flow characteristics

Model No.	Solenoid position		P → A/B		A/B→R1/R2	
			C[dm^3 /(s·bar)]	b	C[dm^3 /(s·bar)]	b
M3GB1 M4GB1	Two 3-port valves integrated		0.86	0.35	1.1 (0.67)	0.22 (0.23)
	2-position		1.1	0.22	1.2 (0.70)	0.20 (0.10)
	3-position	All ports closed	0.98	0.22	1.1 -	0.24 -
		ABR connection	0.97	0.35	1.3 (0.68)	0.22 (0.24)
		PAB connection	1.1	0.38	1.1 -	0.21 -
M3GB2 M4GB2	Two 3-port valves integrated		1.7	0.44	2.1 (1.6)	0.32 (0.30)
	2-position		2.4	0.34	2.7 (1.7)	0.24 (0.31)
	3-position	All ports closed	2.2	0.34	2.4 -	0.29 -
		ABR connection	2.2	0.34	2.8 (1.8)	0.24 (0.27)
		PAB connection	2.4	0.29	2.4 -	0.29 -
M4GB3	2-position		3.5	0.34	3.8 (2.6)	0.11 (0.27)
	3-position	All ports closed	3.1	0.33	3.3 -	0.22 -
		ABR connection	3.0	0.30	3.8 (2.7)	0.11 (0.22)
		PAB connection	3.6	0.36	3.3 -	0.28 -

*1: Effective cross-sectional area S and sonic conductance C are converted as S ≈ 5.0 × C. *2: Values in ( ) are with the exhaust check valve.

Wiring specifications

Item	T10□ Common terminal block	T11□ Common terminal block	T30□ DSub-connector	T50□ Flat cable 20-pin	T51□ Flat cable 20-pin	T52□ Flat cable 10-pin	T53□ Flat cable 26-pin
Connector and terminal block specifications	M3 thread tightening Terminal count 18	Clamping Terminal count 26	D-sub-connector 25-pin	MIL-C-83503 standard compliant Pressure welding socket 20-pin	MIL-C-83503 standard compliant Pressure welding socket 20-pin	MIL-C-83503 standard compliant Pressure welding socket 10-pin	MIL-C-83503 standard compliant Pressure welding socket 26-pin
Max. number of solenoids	16 points	24 points	24 points	16 points	18 points	8 points	24 points
Manifold internal wiring	Details on pages 816 to 823						
Wiring block position Blank: Left side R: Right side	**Left side: T □** a solenoid side; b solenoid side; Wiring block, 1st station, 2nd station, 3rd station, ..., 6th station			**Right side: T □ R** a solenoid side; b solenoid side; 1st station, 2nd station, 3rd station, ..., 6th station, Wiring block			
Array method Blank: Standard sequential W: Double wiring	**(Ex.) In the case of T50 □** Manifold specifications: 1a 2a 3a 4a / S D S D / 2b 4b; 1st station 3rd station; 2nd station 4th station Standard wiring (sequential): Blank Connector pin No. 1 2 3 4 5 6; Valve solenoid No. 1a 2a 2b 3a 4a 4b Double wiring: W Connector pin No. 1 2 3 4 5 6 7 8; Valve solenoid No. 1a Blank 2a 2b 3a Blank 4a 4b						

Serial transmission device unit specifications

Download the communication setting file from the CKD website (https://www.ckd.co.jp/en/).

Item		T6G1
Network name		CC-Link ver. 1.10
Power supply voltage	Unit side	24 VDC ±10%
	Valve side	24 VDC 10% −5%
Current consumption	Unit side	100mA or less (when all output points are ON)
	Valve side	15 mA or less (when all output points are OFF)
No. of output points		16 points
Occupied number		1 station
Operation display		LED (power supply and communication status)

Item		T8G1 / T8G2	T8GP1 / T8GP2	T8P1 / T8P2	T8PP1 / T8PP2	T8EC1 / T8EC2	T8ECP1 / T8ECP2	T8EN1 / T8EN2	T8ENP1 / T8ENP2	T8D1 / T8D2	T8DP1 / T8DP2	T8EB1 / T8EB2	T8EBP1 / T8EBP2	T8EP1 / T8EP2	T8EPP1 / T8EPP2
Communication protocol		CC-Link ver. 1.10		PROFIBUS-DP (V0)		EtherCAT		EtherNet/IP		DeviceNet		CC-Link IEF Basic		PROFINET	
Power supply voltage	Unit side	24 VDC ±10%								11 to 25 VDC		24 VDC ±10%			
	Valve side	24 VDC 10%, 5%													
Current consumption	Unit side	60 mA or less (when all output points are ON)		60 mA or less (when all output points are ON)		110 mA or less (when all output points are ON)		120 mA or less (when all output points are ON)		70 mA or less (when all output points are ON)		130 mA or less (when all output points are ON)		130 mA or less (when all output points are ON)	
	Valve side	T8 □ 1: 15 mA or less T8 □ 2: 20 mA or less (When all output points are ON) Load current is not included								15 mA or less (When all output points are ON) Load current is not included					
No. of output points		T8 □1: 16 points T8 □ 2: 32 points													
Occupied number		1 station													
Operation display		LED (power supply and communication status)													
Output		NPN output	PNP output	NPN output	PNP output	NPN output	PNP output	NPN output	PNP output	NPN output	PNP output	NPN output	PNP output	NPN output	PNP output

Sensor specifications

Discrete specifications

Item		Positive pressure	Negative pressure *2
Working pressure *1		0 to 1.0 MPa	-100kPa to 0
Service voltage		10.8 to 30.0 VDC	
Current consumption		5 mA (24 VDC, no load)	
Pressure detection method		Diffused semiconductor pressure switch	
Ambient temperature		0 to 55°C	
Proof pressure		1.5 MPa	0.5 MPa
Degree of protection		Dust-proof	
Analog output	Output voltage	1 to 5V	
	Zero point voltage	1±0.1V	
	Linearity	±0.5% F.S. max	
	Temperature characteristics	±2% F.S. max	
	Output current	0.5mA max. (load resistance 10 kΩ)	
Wiring method		Connector connection	
Wire length		1000 mm	

*1 Use the smaller working pressure range for the valve or pressure sensor.
*2 For negative pressure, only the single unit sensor is supported.

Lead wire color and content

Line color	Description
Brown	Power supply (10.8 to 30.0 VDC)
Black	Analog output (1 to 5 V)
Blue	GND(0V)

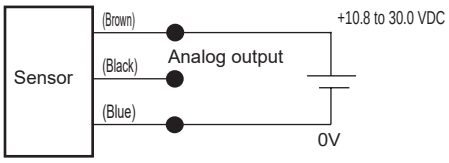

Analog output

● Positive pressure

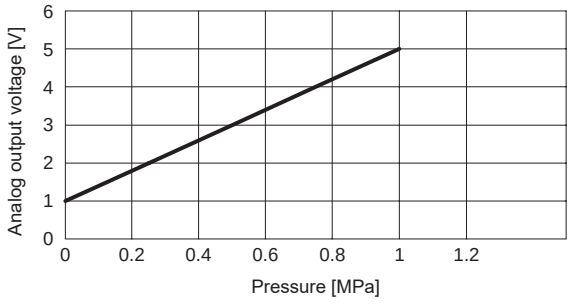

● Negative pressure

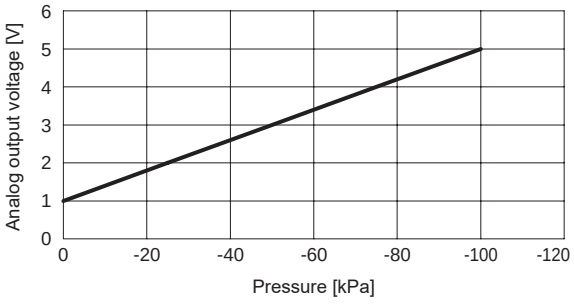

MEMO

M4GB1/2/3-T* (D) Series

Reduced wiring manifold; base piping

How to order

Manifold model No.

M 4GB1 1 0R - C6 - T30 W H D - ○ - 3

3-port manifold model No.

M 3GB1 66 0R - C6 - T30 W H D - ○ - 3

● Discrete valve for mounting base

4GB1 1 9R - 00 - A2N ○ H — 3

● 3-port discrete valve for mounting base

3GB1 66 9R - 00 - A2N ○ H — 3

Ⓐ Model No.

Ⓑ Solenoid position

Ⓒ Port size (*3) (*4)

Ⓓ Reduced wiring connection

Ⓔ Terminal/connector pin array

Ⓕ Option

Ⓖ Mounting

Ⓗ Station No.

Ⓘ Voltage

● For the cable with D-sub-connector model number, refer to page 819.

● Refer to page 815 for the model No. of cables for flat cable connector.

Ⓐ Model No.	3GB1	3GB2	4GB1	4GB2	4GB3
Ⓑ Solenoid position					
1 2-position single			●	●	●
2 2-position double			●	●	●
3 3-position all ports closed			●	●	●
4 3-position ABR connection			●	●	●
5 3-position PAB connection			●	●	●
66 Two 3-port valves integrated (*1) (*2) — A side valve: Normally closed, B side valve: Normally closed	●	●			
67 Two 3-port valves integrated (*1) (*2) — A side valve: Normally closed, B side valve: Normally open	●	●			
76 Two 3-port valves integrated (*1) (*2) — A side valve: Normally open, B side valve: Normally closed	●	●			
77 Two 3-port valves integrated (*1) (*2) — A side valve: Normally open, B side valve: Normally open	●	●			
8 Mix manifold (for multiple solenoid positions)	●	●	●	●	●

Ⓒ Port size		Port P/R1/R2 (2) = Rc1/8 (3) = Rc1/4 (4) =Rc3/8				
Port	4(A)/2(B) port					
CF	ø1.8 barbed fitting (compatible tube UP-9102-**)	(2)		(2)		
C18	ø1.8 push-in fitting (compatible tube UP-9402-**)	(2)		(2)		
C4	ø4 push-in fitting	(2)	(3)	(2)	(3)	
C6	ø6 push-in fitting	(2)	(3)	(2)	(3)	(4)
C8	ø8 push-in fitting (*5) (*6)	(2)	(3)	(2)	(3)	(4)
C10	ø10 push-in fitting (*5) (*6)		(3)		(3)	(4)
CL18	ø1.8 push-in L-fitting upward (compatible tube UP-9402-**)			(2)		
CL4	ø4 push-in L-fitting (upward)			(2)		
CL6	ø6 push-in L-fitting (upward)			(2)	(3)	
CL8	ø8 push-in L-fitting (upward)				(3)	(4)
CL10	ø10 push-in L-fitting (upward)					(4)
CD18	ø1.8 push-in L-fitting downward (compatible tube UP-9402-**)	(2)		(2)		
CD4	ø4 push-in L-fitting (downward)	(2)		(2)		
CD6	ø6 push-in L-fitting (downward)	(2)	(3)	(2)	(3)	
CD8	ø8 push-in L-fitting (downward)		(3)		(3)	(4)
CD10	ø10 push-in L-fitting (downward)					(4)
CX	Push-in fitting mix	(2)	(3)	(2)	(3)	(4)
M5	M5	(2)		(2)		
06	Rc1/8		(3)		(3)	
08	Rc1/4					(4)
Port	4(A)/2(B) port	Port P/R1/R2 (5) = 1/8NPT, (6) = 1/4NPT,(7) = 3/8NPT				
C3N	ø1/8" push-in fitting	(5)		(5)		
C4N	ø5/32" push-in fitting	(5)		(5)		
C6N	ø1/4" push-in fitting		(6)		(6)	
C8N	ø5/16" push-in fitting		(6)		(6)	(7)
C10N	ø3/8" push-in fitting					(7)
CL3N	ø1/8" push-in L-fitting upward (*6)			(5)		
CL4N	ø5/32" push-in L-fitting upward (*6)			(5)		
CL6N	ø1/4" push-in L-fitting upward (*6)				(6)	
CL8N	ø5/16" push-in L-fitting upward (*6)				(6)	
CXN	Push-in fitting mix	(5)	(6)	(5)	(6)	(7)
M5N	M5	(5)		(5)		
06 N	NPT1/8		(6)		(6)	
08 N	NPT1/4 (*6)					(7)
Port	4(A)/2(B) port	Port P/R1/R2 (8) = G1/8, (9) = G1/4				
C4G	ø4 push-in fitting	(8)	(9)	(8)	(9)	
C6G	ø6 push-in fitting	(8)	(9)	(8)	(9)	
C8G	ø8 push-in fitting		(9)		(9)	
CL4G	ø4 push-in L-fitting upward (*6)			(8)		
CL6G	ø6 push-in L-fitting upward (*6)			(8)	(9)	
CL8G	ø8 push-in L-fitting upward (*6)				(9)	
CXG	Push-in fitting mix	(8)	(9)	(8)	(9)	
M5G	M5	(8)		(8)		
06G	G1/8		(9)		(9)	
00	Discrete valve for integrated base	●	●	●	●	●

Ⓓ Reduced wiring connection

Refer to the next page for electrical connections.

is not available.

⚠ Precautions for model No. selection

*1 : Select M4GB*80R when mixing with 3, 5-port valves.
Further, select M3GB*80R when mixing with masking plate.

*2 : Not compatible when combined with external pilot (K). Dimensions are the same as those of the respective 2-position double solenoid.

3 : CL push-in L fitting (upward) is compatible only with the single solenoid manifold. Long elbow is for port A and short elbow for port B.

*4 : Ports A and B are the same size for push-in L fittings.

*5 : 4G1 C8 and 4G2 C10 are available as made to order. In addition, these do not support push-in fitting mixing.

*6 : Blank: The wiring is based on the type of valve equipped.
W*: All wired for double solenoid valves regardless of the type of valve equipped.

			Ⓐ Model No.				
			3GB1	3GB2	4GB1	4GB2	4GB3
Ⓓ Reduced wiring (lamp and surge suppressor provided as standard) 12/24 VDC							
T10	Common terminal block (M3 thread)	Left-sided specifications	●	●	●	●	●
T10R		Right-sided specifications	●	●	●	●	●
T11	Common terminal block (clamping)	Left-sided specifications	●	●	●	●	●
T11R		Right-sided specifications	●	●	●	●	●
T30	D-sub-connector	Left-sided specifications	●	●	●	●	●
T30R		Right-sided specifications	●	●	●	●	●
T50	20-pin flat cable connector (with power supply terminal)	Left-sided specifications	●	●	●	●	●
T50R		Right-sided specifications	●	●	●	●	●
T51	20-pin flat cable connector (without power supply terminal)	Left-sided specifications	●	●	●	●	●
T51R		Right-sided specifications	●	●	●	●	●
T52	10-pin flat cable connector (without power supply terminal)	Left-sided specifications	●	●	●	●	●
T52R		Right-sided specifications	●	●	●	●	●
T53	26-pin flat cable connector (without power supply terminal)	Left-sided specifications	●	●	●	●	●
T53R		Right-sided specifications	●	●	●	●	●
Ⓓ Serial transmission (lamp/surge suppressor provided as standard) 24 VDC							
T6G1	CC-Link	NPN 16 points	●	●	●	●	●
T8G1	CC-Link	NPN 16 points	●	●	●	●	●
T8G2		NPN 32 points	●	●	●	●	●
T8GP1		PNP 16 points	●	●	●	●	●
T8GP2		PNP 32 points	●	●	●	●	●
T8P1	PROFIBUS-DP	NPN 16 points	●	●	●	●	●
T8P2		NPN 32 points	●	●	●	●	●
T8PP1		PNP 16 points	●	●	●	●	●
T8PP2		PNP 32 points	●	●	●	●	●
T8EC1	EtherCAT	NPN 16 points	●	●	●	●	●
T8EC2		NPN 32 points	●	●	●	●	●
T8ECP1		PNP 16 points	●	●	●	●	●
T8ECP2		PNP 32 points	●	●	●	●	●
T8EN1	EtherNet/IP	NPN 16 points	●	●	●	●	●
T8EN2		NPN 32 points	●	●	●	●	●
T8ENP1		PNP 16 points	●	●	●	●	●
T8ENP2		PNP 32 points	●	●	●	●	●
T8D1	DeviceNet	NPN 16 points	●	●	●	●	●
T8D2		NPN 32 points	●	●	●	●	●
T8DP1		PNP 16 points	●	●	●	●	●
T8DP2		PNP 32 points	●	●	●	●	●
T8EB1	CC-Link IEF Basic	NPN 16 points	●	●	●	●	●
T8EB2		NPN 32 points	●	●	●	●	●
T8EBP1		PNP 16 points	●	●	●	●	●
T8EBP2		PNP 32 points	●	●	●	●	●
T8EP1	PROFINET	NPN 16 points	●	●	●	●	●
T8EP2		NPN 32 points	●	●	●	●	●
T8EPP1		PNP 16 points	●	●	●	●	●
T8EPP2		PNP 32 points	●	●	●	●	●
A2N	Without lead wire (without socket)	with surge suppressor and indicator lamp	●	●	●	●	●
Ⓔ Terminal/connector pin array							
Blank	Standard wiring	(*6)	●	●	●	●	●
W	Double wiring	(*6)	●	●	●	●	●
W1	Double wiring (with single spare wiring)	(*6) (*7)	●	●	●	●	●
Ⓕ Option							
Blank	Manual override of non-locking/locking common		●	●	●	●	●
M	Manual override of non-locking		●	●	●	●	●
H	With exhaust check valve	(*8)	●	●	●	●	●
K	External pilot	(*9)	●	●	●	●	●
A	Ozone/coolant proof		●	●	●	●	●
S	Surgeless	(*10)	●	●	●	●	●
E	Low exoergic/energy saving circuit	(*10) (*11)	●	●	●	●	●
F	Port A/B filter built in	(*12)	●	●	●	●	●
G1	With sensor (1-port detection type)	(*16) (*17)			●	●	●
G2	With sensor (2-port detection type)	(*17)	●	●	●	●	●
Z1	Air supply spacer	(*13)	●	●	●	●	●
Z2	In-stop valve spacer	(*13) (*14)	●	●	●	●	●
Z3	Exhaust spacer	(*13)	●	●	●	●	●
Z6	Spacer pilot check valve	(*13) (*15)				●	
Ⓖ Mount type							
Blank	Direct mount		●	●	●	●	●
D	DIN rail mount		●	●	●	●	●
Ⓗ Station No.							
2 to 20	2 stations to Refer to page 366 for the max. station No. per model.		●	●	●	●	●
Ⓘ Voltage							
3	24 VDC		●	●	●	●	●
4	12 VDC		●	●	●	●	●

Ozone-proof specifications • Coolant proof specifications

Page 370 Select option "A" of Item Ⓕ in How to order.

Clean-room specifications

● Anti-dust generation structure for use in cleanrooms

** - Voltage - **P7***

Specifications for rechargeable battery (Catalog No. CC-1226A)

● For use in the rechargeable battery manufacturing process, materials used for air path and sliding section are limited

** - Voltage - **P4**

CE marking specifications

** - Voltage - **ST**

• Standard voltage of 24 VDC or less is CE marking-compatible even if the model No. is not indicated with "ST".

⚠ Precautions for model No. selection

*7 : Spare wiring (A type socket assembly) is included on the cap side for single types. A holder for retaining the socket assembly is included for single unit valves (A2N). For details, refer to page 197.

*8 : 3-position all ports closed and PAB connection are not provided with the exhaust check valve specifications (H). Refer to page 851 for details on the exhaust check valve.

*9 : Consult with CKD when using a vacuum with the external pilot (K).

*10 : In addition, surgeless "S" and low exoergic/energy saving circuit "E" cannot be selected together.

*11 : Surgeless specifications.

*12 : A filter is built into port P as standard.

*13 : Specify the spacer mounting position and quantity on the manifold specifications sheet. Stacking of spacers is not possible. Combination with the masking plate is not supported. For details, refer to page 188 to page 192.

*14 : Not compatible in combination with external pilot (K).

*15 : Combination with push-in L fittings (upward) is not supported.

*16 : Single and double only.

*17 : The pressure range is 0 to 0.7 MPa.

Manifold configuration explanation and parts list

- T10/T10R
- T11/T11R
- T30/T30R
- T50/T50R
- T51/T51R
- T52/T52R
- T53/T53R

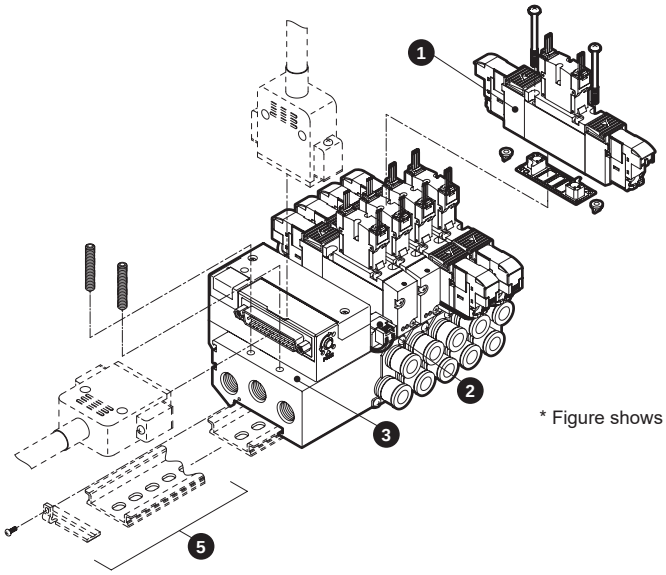

* Figure shows T30.

- T6G1

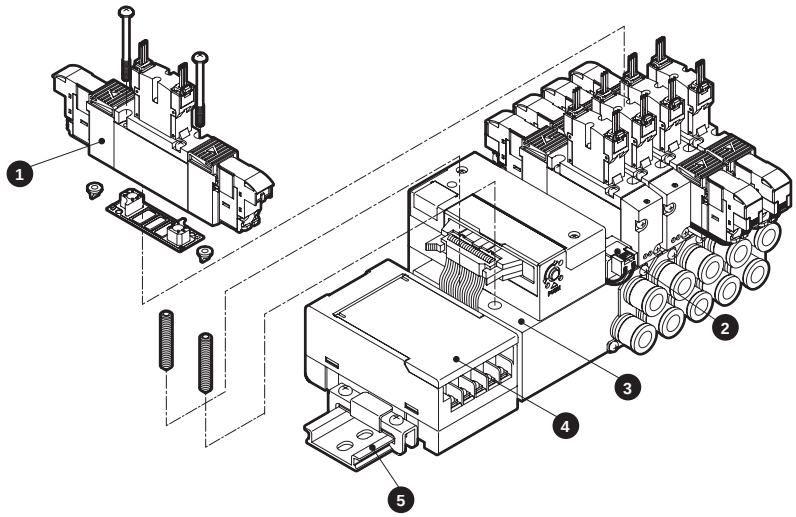

- T8*

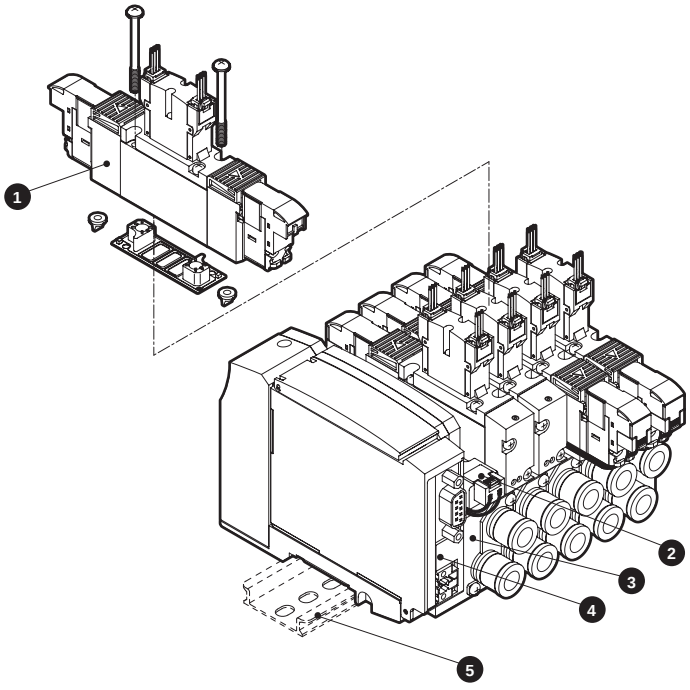

Mount (direct, DIN rail) cannot be changed after purchase of the M4GB2-T8 and M4GB3-T8 Series.
M4GB1-T8 Series allows changes.

Main parts list

No.	Component name		Model No.	Description	Remarks
1	Discrete valve for integrated base		3/4GB □□9R-00-A2N Option - Voltage Solenoid position Series flow rate size	Discrete valve Gasket 2 mounting screws 2 PR check valves	Details on page 358
2	Masking plate	3G1/4G1	4G1R-MP	Masking plate Gasket 2 mounting screws	* 4G3R-MP has two PR check valves included.
		3G2/4G2	4G2R-MP		
		3G2/4G3	4G3R-MP		
3	Manifold base assembly		M4GB □R - Port size - Reduce wire conn. - Option - Station No. Series flow rate size	Manifold base Wiring block	
4	Serial transmission device unit		4GR-OPP3- Wiring method	Discrete serial transmission device unit (connector type)	Details on page 187
			4GR-OPP7- Wiring method	Discrete serial transmission device unit (thin slot type)	
5	DIN rail kit		4GB□R-BAA Rail length - Option D Series flow rate size		Details on page 200

Parts list

No.	Part name	Model No.
–	Coil assembly	4GR-A2N- □ -COIL- Voltage Blank: Standard A: Ozone/coolant proof S: Surgeless E: Low exoergic/energy circuit K: External pilot
–	A-connector socket assembly details on page 837	4GR □ -SOCKET-ASSY-A □ □ - Row No. Series flow rate size Blank: Left side, R: Right side A: aSOL side, B: bSOL side n: Specify position of valve to be connected

No.	Part name			Model No.
–	Cartridge Push-in fitting and related parts	4G1	ø1.8 barbed	4G1R−JOINT−CF
			ø1.8 straight	4G1R−JOINT−C18
			ø4 straight	4G1R−JOINT−C4
			ø6 straight	4G1R−JOINT−C6
			ø8 straight (*1)	4G1R−JOINT−C8
			ø1.8 elbow	4G1R−JOINT−CL18, CLL18
			ø4 elbow	4G1R−JOINT−CL4, CLL4
			ø6 elbow	4G1R−JOINT−CL6, CLL6
			Plug cartridge	4G1R−JOINT−CPG
		4G2	ø4 straight	4G2R−JOINT−C4
			ø6 straight	4G2R−JOINT−C6
			ø8 straight	4G2R−JOINT−C8
			ø10 straight (*2)	4G2R−JOINT−C10
			ø6 elbow	4G2R−JOINT−CL6, CLL6
			ø8 elbow	4G2R−JOINT−CL8, CLL8
			Plug cartridge	4G2R−JOINT−CPG
		4G3	ø6 straight	4G3R−JOINT−C6
			ø8 straight	4G3R−JOINT−C8
			ø10 straight	4G3R−JOINT−C10
			ø8 elbow	4G3R−JOINT−CL8, CLL8
			ø10 elbow	4G3R−JOINT−CL10, CLL10

*1: Dedicated part for M4GB1-C8.
*2: Common product with the 4G3 ø10 straight.

* For related products, refer to page 188 to page 198.

Dimensions

M4GB1

*1 Figure shows T50. Refer to page 186 for detailed wiring block dimensions.
*2 The two 3-port valves integrated type has the same dimensions as the double model.

● Reduced wiring left side (T10/T11/T30/T50/T51/T52/T53)

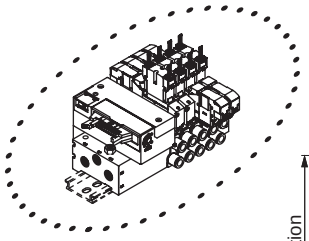

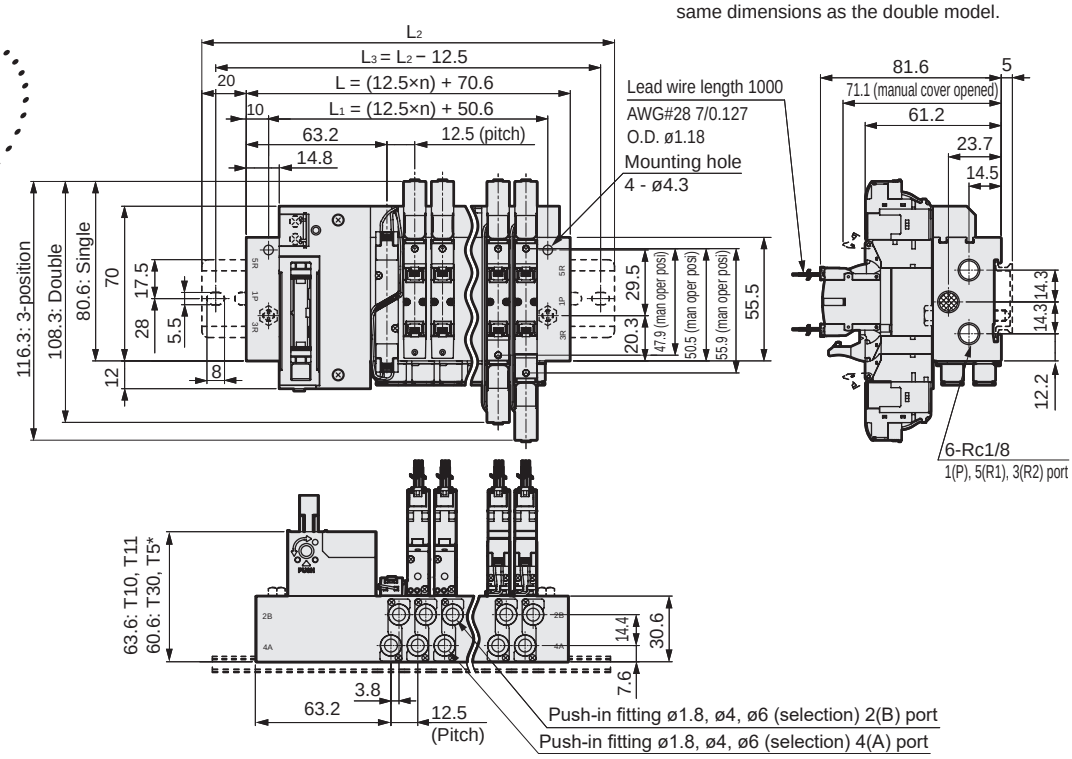

Note: Refer to page 172 for details on the push-in fitting elbow (upward) (downward).

● Reduced wiring right side (T10R/T11R/T30R/T50R/T51R/T52R/T53R)

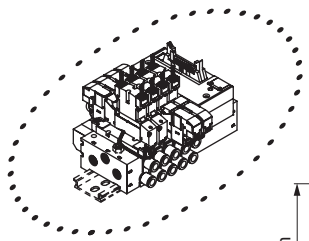

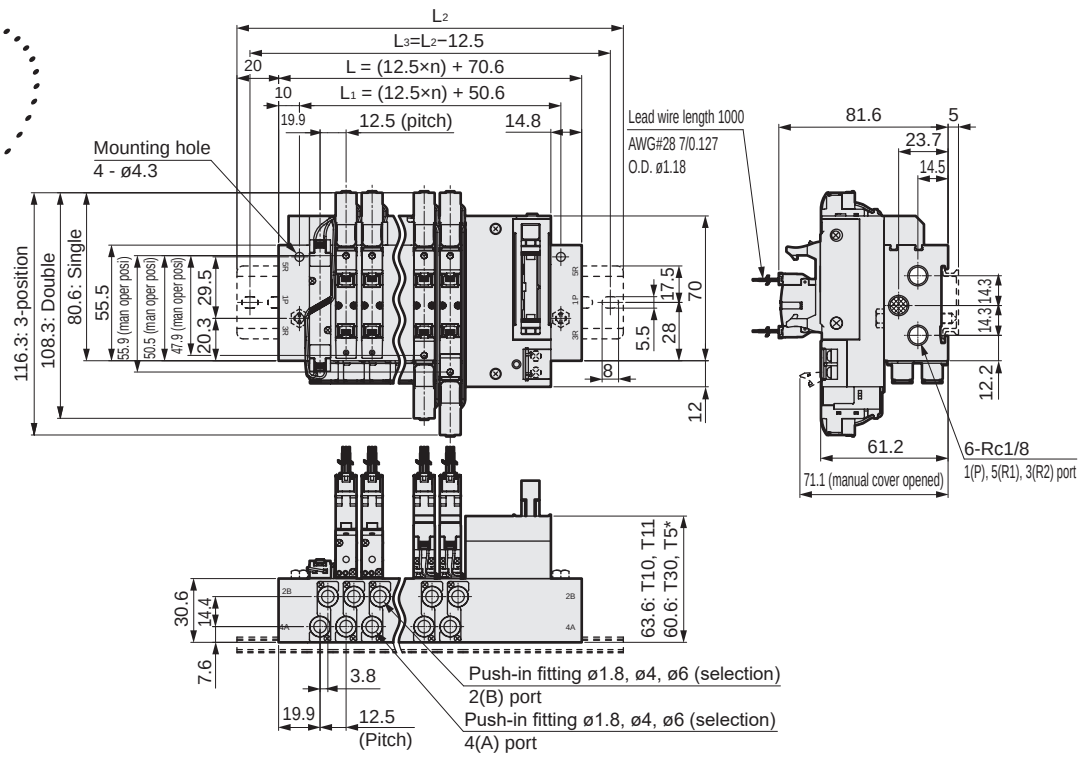

Station No.	2	3	4	5	6	7	8	9	10	11	12	13	14	15	16	17	18	19	20
L	95.6	108.1	120.6	133.1	145.6	158.1	170.6	183.1	195.6	208.1	220.6	233.1	245.6	258.1	270.6	283.1	295.6	308.1	320.6
L_1	75.6	88.1	100.6	113.1	125.6	138.1	150.6	163.1	175.6	188.1	200.6	213.1	225.6	238.1	250.6	263.1	275.6	288.1	300.6
L_2	137.5	150.0	162.5	175.0	187.5	200.0	212.5	225.0	237.5	250.0	262.5	275.0	287.5	300.0	312.5				
L_3	125.0	137.5	150.0	162.5	175.0	187.5	200.0	212.5	225.0	237.5	250.0	262.5	275.0	287.5	300.0				

Dimensions

M4GB1

● Serial transmission (T6G1)
DIN rail mounting (D)

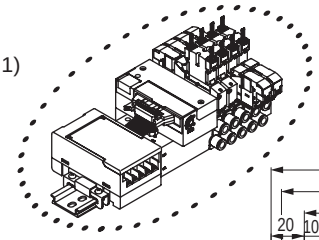

* The two 3-port valve built-in type has the same dimensions as the double model.

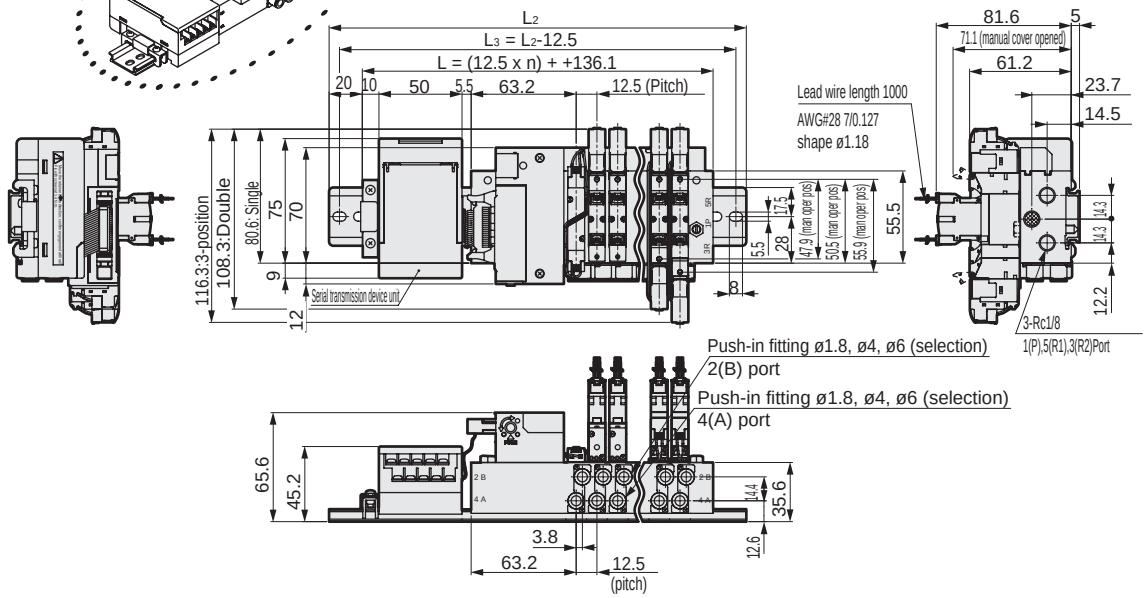

Station No.	2	3	4	5	6	7	8	9	10	11	12	13	14	15	16
L	161.1	173.6	186.1	198.6	211.1	223.6	236.1	248.6	261.1	273.6	286.1	298.6	311.1	323.6	336.1
L_2	212.5	225.0	237.5	250.0	262.5	275.0	287.5	300.0	312.5	325.0	337.5	350.0	362.5	375.0	387.5
L_3	200.0	212.5	225.0	237.5	250.0	262.5	275.0	287.5	300.0	312.5	325.0	337.5	350.0	362.5	375.0

● Serial transmission (T8□)
DIN rail mount (D)

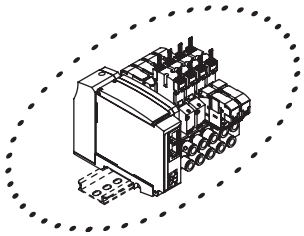

Note:Refer to page 172 for details on the push-in fitting elbow (upward) (downward).

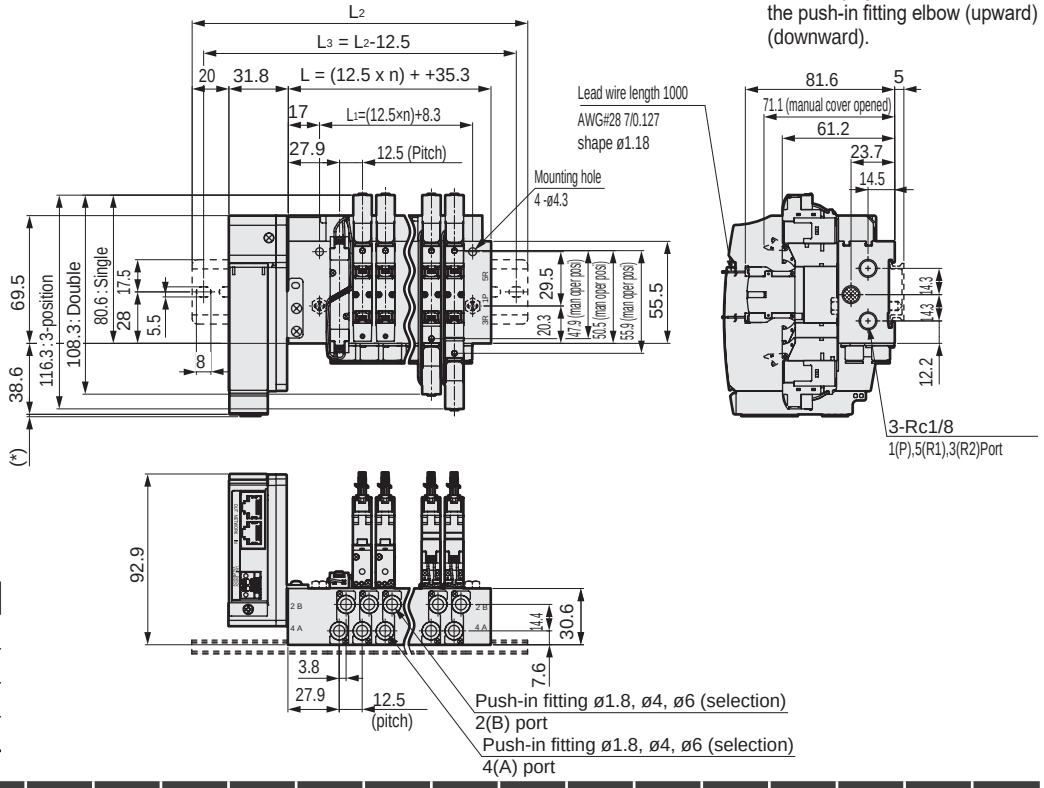

Serial transmission	* Dimensions
T8G □	1.0
T8P □	4.9
T8E □	1.5
T8D □	1.0

Station No.	2	3	4	5	6	7	8	9	10	11	12	13	14	15	16	17	18	19	20
L	60.3	72.8	85.3	97.8	110.3	122.8	135.3	147.8	160.3	172.8	185.3	197.8	210.3	222.8	235.3	247.8	260.3	272.8	285.3
L_1	33.3	45.8	58.3	70.8	83.3	95.8	108.3	120.8	133.3	145.8	158.3	170.8	183.3	195.8	208.3	220.8	233.3	245.8	258.3
L_2	137.5	150.0	162.5	175.0	187.5	200.0	212.5	225.0	237.5	250.0	262.5	275.0	287.5	300.0	312.5				
L_3	125.0	137.5	150.0	162.5	175.0	187.5	200.0	212.5	225.0	237.5	250.0	262.5	275.0	287.5	300.0				

Dimensions

M4GB2

*1 Figure shows T10. Refer to page 186 for detailed wiring block dimensions.
*2 The two 3-port valves integrated type has the same dimensions as the double model.

● Reduced wiring left side (T10/T11/T30/T50/T51/T52/T53)

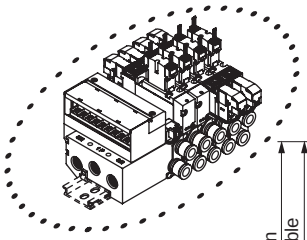

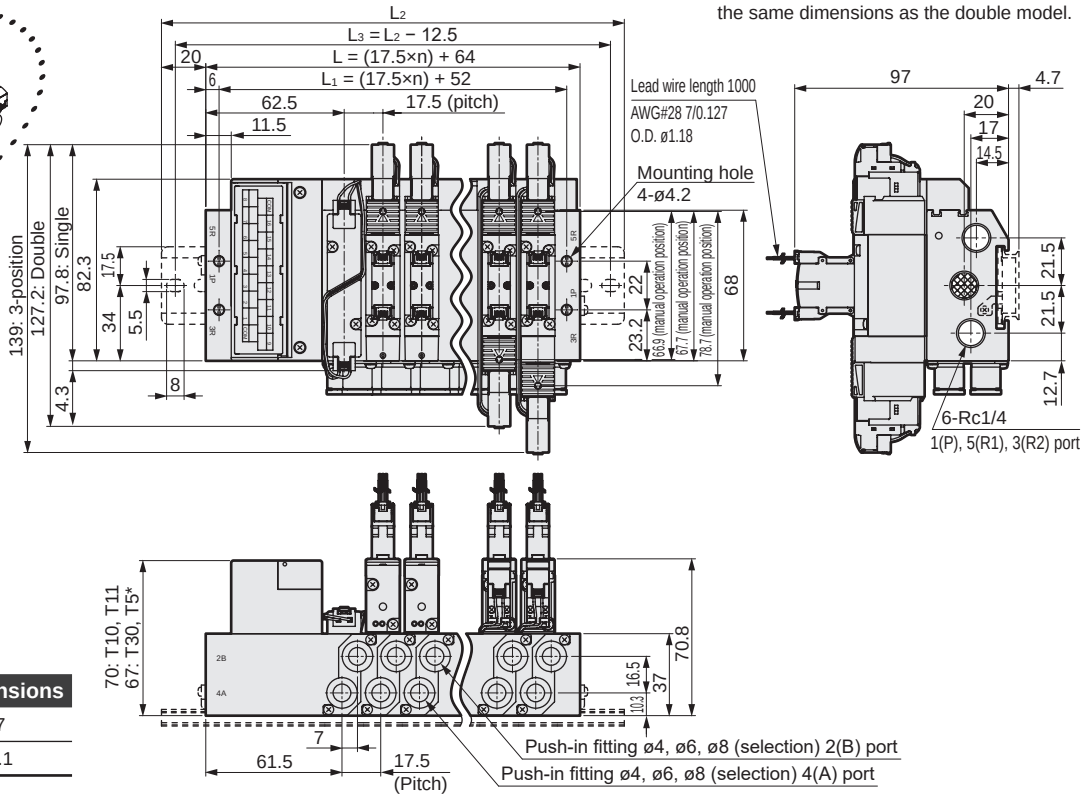

A/B port size	* Dimensions
ø4, ø6, ø8	7
ø10	8.1

Note: Refer to page 178 for details on the push-in fitting elbow (upward) (downward).

● Reduced wiring right side (T10R/T11R/T30R/T50R/T51R/T52R/T53R)

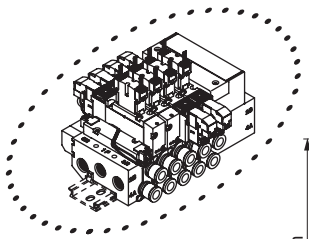

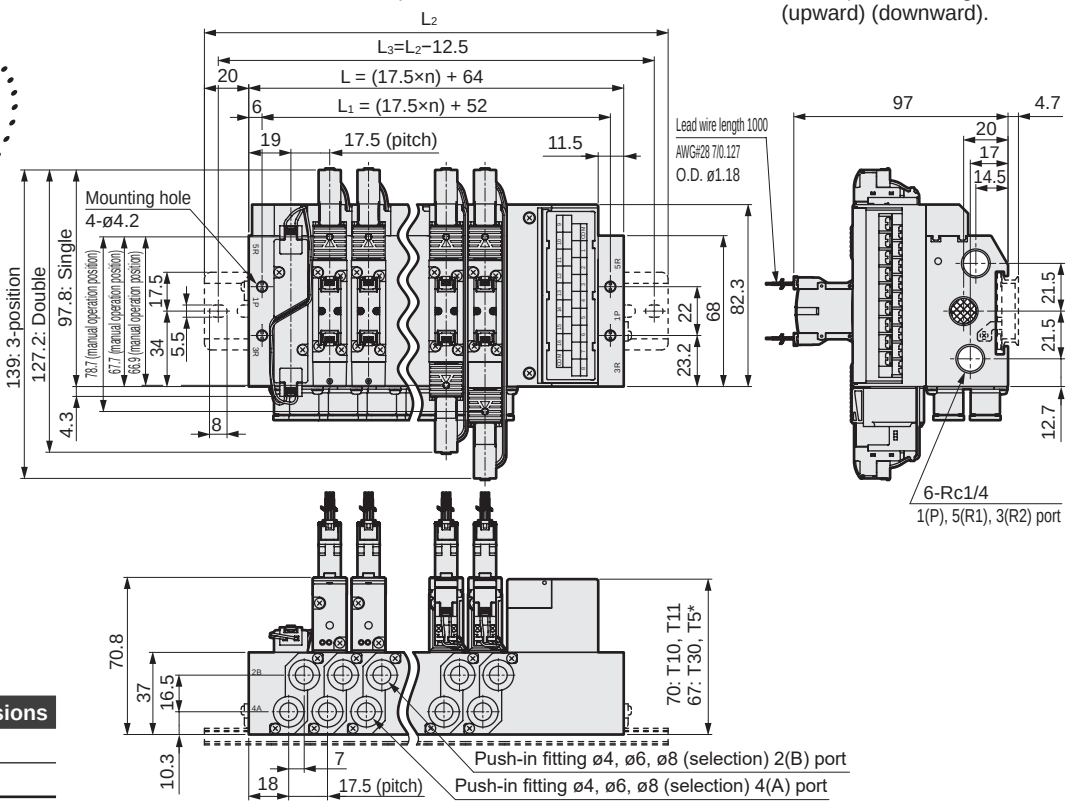

A/B port size	* Dimensions
ø4, ø6, ø8	7
ø10	8.1

Station No.	2	3	4	5	6	7	8	9	10	11	12	13	14	15	16	17	18	19	20
L	99.0	116.5	134.0	151.5	169.0	186.5	204.0	221.5	239.0	256.5	274.0	291.5	309.0	326.5	344.0	361.5	379.0	396.5	414.0
L_1	87.0	104.5	122.0	139.5	157.0	174.5	192.0	209.5	227.0	244.5	262.0	279.5	297.0	314.5	332.0	349.5	367.0	384.5	402.0
L_2	150.0	162.5	175.0	200.0	212.5	237.5	250.0	262.5	287.5	300.0	325.0	337.5	350.0	375.0	387.5				
L_3	137.5	150.0	162.5	187.5	200.0	225.0	237.5	250.0	275.0	287.5	312.5	325.0	337.5	362.5	375.0				

Dimensions

M4GB2

● Serial transmission (T6G1)
DIN rail mounting (D)

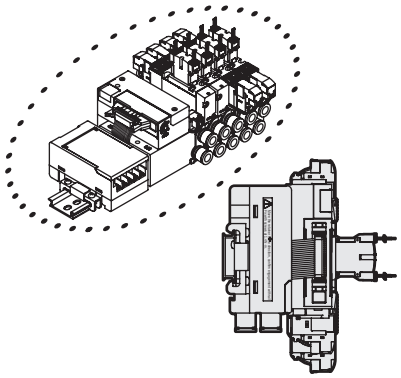

* The two 3-port valves integrated type has the same dimensions as the double model.

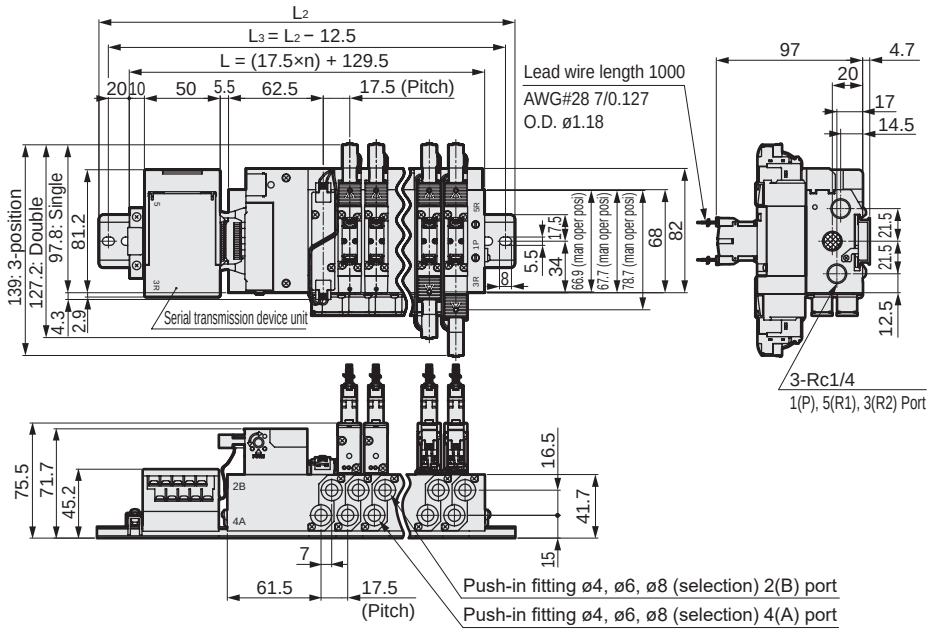

A/B port size	* Dimensions
ø4, ø6, ø8	7
ø10	8.1

Note: Refer to page 178 for details on the push-in fitting elbow (upward) (downward).

Station No.	2	3	4	5	6	7	8	9	10	11	12	13	14	15	16
L	164.5	182.0	199.5	217.0	234.5	252.0	269.5	287.0	304.5	322.0	339.5	357.0	374.5	392.0	409.5
L_2	212.5	225.0	250.0	262.5	275.0	300.0	312.5	337.5	350.0	362.5	387.5	400.0	425.0	437.5	450.0
L_3	200.0	212.5	237.5	250.0	262.5	287.5	300.0	325.0	337.5	350.0	375.0	387.5	412.5	425.0	437.5

● Serial transmission (T8□)
DIN rail mounting (D)

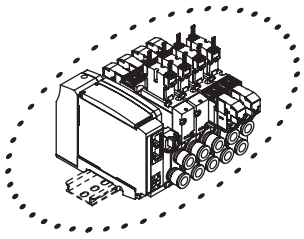

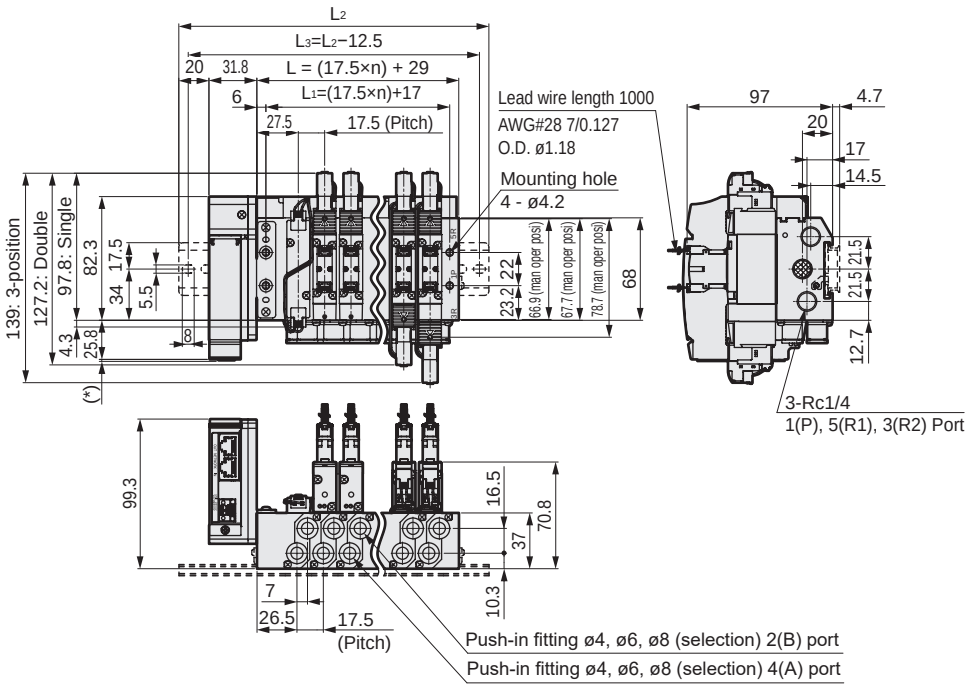

Serial transmission	* Dimensions
T8G □	1.0
T8P □	4.9
T8E □	1.5
T8D □	1.0

*2

A/B port size	*2 dimension
ø4, ø6, ø8	7
ø10	8.1

Station No.	2	3	4	5	6	7	8	9	10	11	12	13	14	15	16	17	18	19	20
L	64.0	81.5	99.0	116.5	134.0	151.5	169.0	186.5	204.0	221.5	239.0	256.5	274.0	291.5	309.0	326.5	344.0	361.5	379.0
L_1	52.0	69.5	87.0	104.5	122.0	139.5	157.0	174.5	192.0	209.5	227.0	244.5	262.0	279.5	297.0	314.5	332.0	349.5	367.0
L_2	137.5	162.5	175.0	200.0	212.5	225.0	250.0	262.5	287.5	300.0	312.5	337.5	350.0	375.0	387.5				
L_3	125.0	150.0	162.5	187.5	200.0	212.5	237.5	250.0	275.0	287.5	300.0	325.0	337.5	362.5	375.0				

Dimensions

M4GB3

● Reduced wiring left side type (T10/T11/T30/T50/T51/T52/T53)

* Figure shows T10. Refer to page 186 for detailed wiring block dimensions.

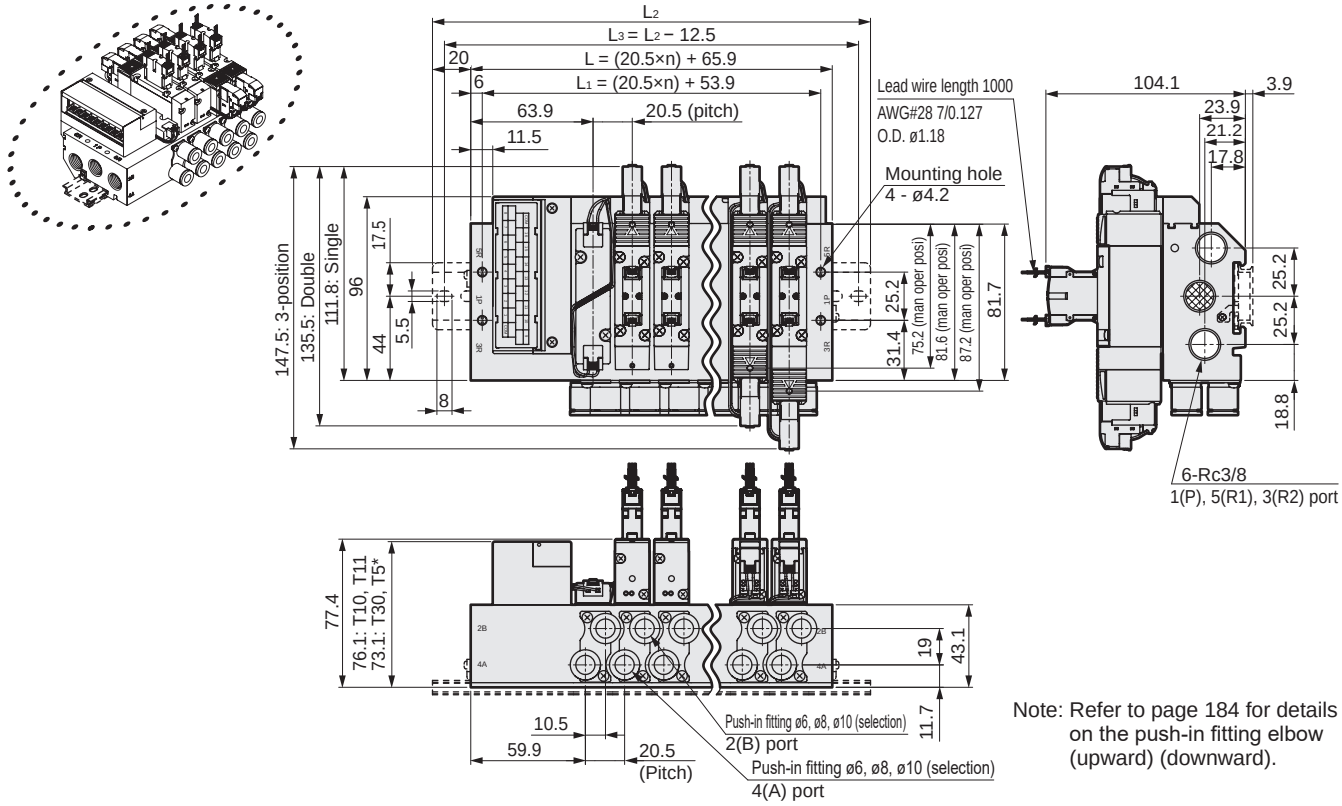

Note: Refer to page 184 for details on the push-in fitting elbow (upward) (downward).

● Reduced wiring right side (T10R/T11R/T30R/T50R/T51R/T52R/T53R)

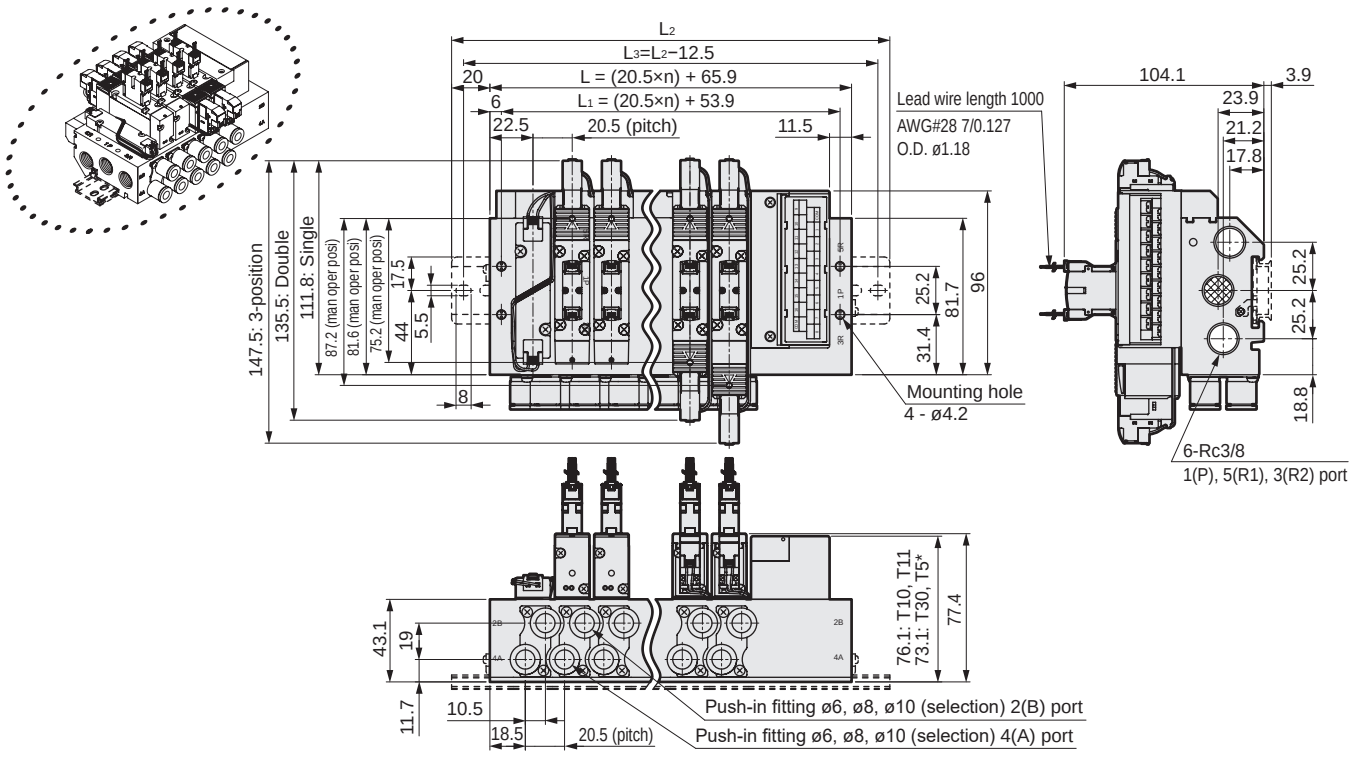

Station No.	2	3	4	5	6	7	8	9	10	11	12	13	14	15	16
L	106.9	127.4	147.9	168.4	188.9	209.4	229.9	250.4	270.9	291.4	311.9	332.4	352.9	373.4	393.9
L_1	94.9	115.4	135.9	156.4	176.9	197.4	217.9	238.4	258.9	279.4	299.9	320.4	340.9	361.4	381.9
L_2	150.0	175.0	200.0	212.5	237.5	250.0	275.0	300.0	312.5	337.5	362.5	375.0	400.0	425.0	437.5
L_3	137.5	162.5	187.5	200.0	225.0	237.5	262.5	287.5	300.0	325.0	350.0	362.5	387.5	412.5	425.0

Dimensions

M4GB3

● Serial transmission (T6G1)
DIN rail mounting (D)

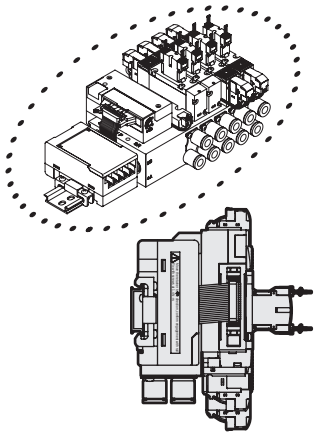

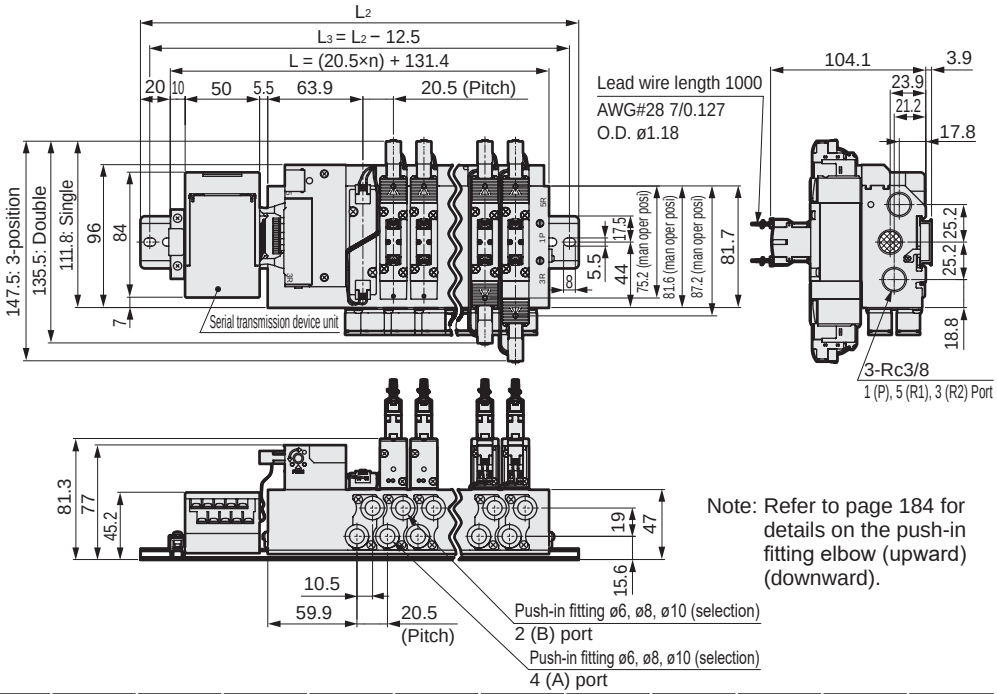

Note: Refer to page 184 for details on the push-in fitting elbow (upward) (downward).

Station No.	2	3	4	5	6	7	8	9	10	11	12	13	14	15	16
L	172.4	192.9	213.4	233.9	254.4	274.9	295.4	315.9	336.4	356.9	377.4	397.9	418.4	438.9	459.4
L_2	212.5	237.5	262.5	275.0	300.0	325.0	337.5	362.5	387.5	400.0	425.0	450.0	462.5	487.5	500.0
L_3	200.0	225.0	250.0	262.5	287.5	312.5	325.0	350.0	375.0	387.5	412.5	437.5	450.0	475.0	487.5

● Serial transmission (T8 □)
DIN rail mounting (D)

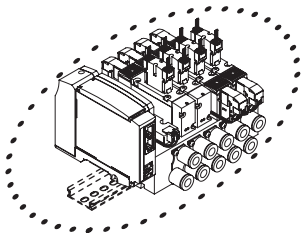

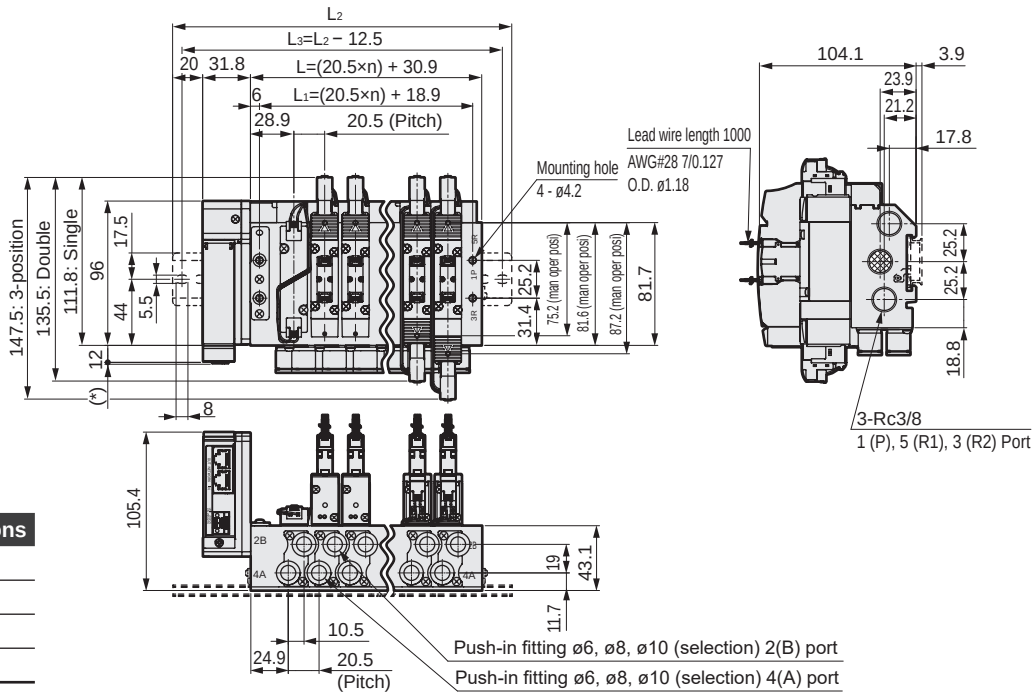

Serial transmission	* Dimensions
T8G □	1.0
T8P □	4.9
T8E □	1.5
T8D □	1.0

Station No.	2	3	4	5	6	7	8	9	10	11	12	13	14	15	16
L	71.9	92.4	112.9	133.4	153.9	174.4	194.9	215.4	235.9	256.4	276.9	297.4	317.9	338.4	358.9
L_1	59.9	80.4	100.9	121.4	141.9	162.4	182.9	203.4	223.9	244.4	264.9	285.4	305.9	326.4	346.9
L_2	150.0	175.0	187.5	212.5	237.5	250.0	275.0	287.5	312.5	337.5	350.0	375.0	400.0	412.5	437.5
L_3	137.5	162.5	175.0	200.0	225.0	237.5	262.5	275.0	300.0	325.0	337.5	362.5	387.5	400.0	425.0

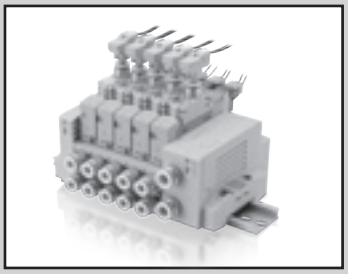

Individual wiring block manifold With pressure sensor
Base piping

MN4GB1/2 Series

● Applicable cylinder bore size: ø20 to ø80

JIS symbol

● 3-port valve

2-position single NC

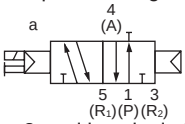

2-position single NO

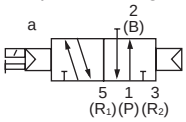

● Two 3-port valves integrated

(A side valve: NC, B side valve: NC)

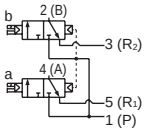

(A side valve: NC, B side valve: NO)

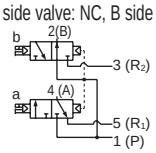

(A side valve: NO, B side valve: NC)

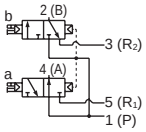

(A side valve: NO, B side valve: NO)

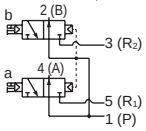

● 5-port valve

2-position single

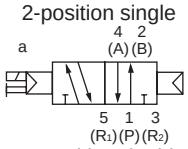

2-position double

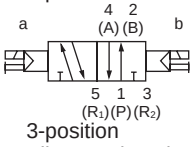

3-position
All ports closed

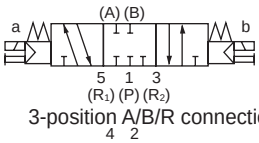

3-position A/B/R connection

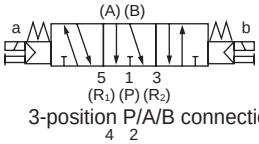

3-position P/A/B connection

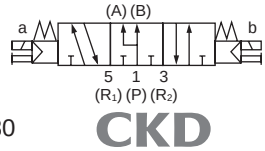

Manifold common specifications

1 MPa ≈ 145.0 psi, 1 MPa = 10 bar

Item	Description
Manifold	Block manifold
Mounting method	DIN rail mount
Air supply and exhaust method	Common supply/common exhaust (With internal exhaust check valve)
Pilot exhaust method	Main valve/pilot valve common exhaust (Pilot exhaust check valve built-in)
Piping direction	Side direction of base
Valve and operation	Pilot operated soft spool valve
Working fluid	Compressed air
Max. working pressure MPa	0.7 (≈101 psi, 7 bar)
Min. working pressure MPa	0.2 (≈29 psi, 2 bar) (*3)
Proof pressure MPa	1.05 (≈152 psi, 10 bar)
Ambient temperature °C	-5 (23°F) to 55 (131°F) (no freezing)
Fluid temperature °C	5 (41°F) to 55 (131°F)
Manual override	Non-locking/locking common (standard)
Lubrication (*1)	Not required
Degree of protection (*2)	Dust-proof
Vibration resistance m/s^2	50 or less
Shock resistance m/s^2	300 or less
Atmosphere	Cannot be used in corrosive gas environments

*1: Use turbine oil Class 1 ISO VG32 for lubrication. Excessive or intermittent lubrication results in unstable operation.
*2: Avoid water drops, oil, etc., during use. IP65 (water jet-proof) applies for DIN terminal box specifications. However, the specified outer diameter of the cord and tightening torque must be used for fixing in place.
*3: The working pressure range is 0 to 0.7 MPa when the external pilot (option code: K) is selected. Set the external pilot pressure between 0.2 and 0.7 MPa.

Electrical specifications

Item		Description					
Rated voltage V		24 DC	12 DC	5 DC	3 DC	100 AC	200 AC
Voltage fluctuation range		±10%					
Holding current A (*4)	Standard	0.015 (0.017)	0.030 (0.034)	0.072 (0.082)	0.120 (0.136)	0.009 (0.009)	0.006 (0.006)
	With low exoergic/energy circuit	0.005	0.010	–		–	
Power consumption W (*4)	Standard	0.35 (0.40)		0.35 (0.40)		–	
	With low exoergic/energy circuit	0.1		–		–	
Apparent power VA (*4)	Standard	–		–		0.93 (0.98)	1.40
Thermal class		B					
Surge suppressor		Option					
Indicator		Lamp (option)					

*4: Values in ( ) apply when lamp is included. In addition, the type with low exoergic/energy circuit is only available with lamp.

Individual specifications

Item			MN3GB1/MN4GB1	MN3GB2/MN4GB2
Max. station No.			24 stations	20 stations
Port size	Metric fitting	Port A/B	Barbed fitting ø1.8 Push-in fitting ø1.8, ø4, ø6	Push-in fitting ø4, ø6, ø8
		Port P/R	Push-in fitting ø6, ø8	Push-in fitting ø8, ø10
	Inch fitting	Port A/B	Push-in fitting ø1/8", ø5/32"	Push-in fitting ø1/4", ø5/16"
		Port P/R	Push-in fitting ø1/4", ø5/16"	Push-in fitting ø5/16", ø3/8"

· For DIN rail mounting, refer to page 855 "Mounting orientation".
· Refer to page 384 for weight.

Performance/characteristics by model

Item			MN3GB1/MN4GB1		MN3GB2/MN4GB2	
			ONHour	OFF	ON	OFF
Response time ms	Two 3-port valves integrated		9	12	12	29
	2-position	Single	12	12	19	19
		Double	9	-	18	-
	3-position	ABR connection	8	15	17	30

Values with lamp/surge suppressor are shown. The response times are values with supply pressure of 0.5 MPa at 20°C and without lubrication. They depend on the pressure and the lubricant quality.

Flow characteristics

Model No.	Solenoid position		P → A/B		A/B→R1/R2	
			C[dm³ /(s·bar)]	b	C[dm³ /(s·bar)]	b
MN3GB1 MN4GB1	Two 3-port valves integrated		0.86	0.35	1.0 (0.66)	0.15 (0.25)
	2-position		1.0	0.30	1.1 (0.72)	0.11 (0.26)
	3-position	All ports closed	0.96	0.32	1.0 -	0.14 -
		ABR connection	0.96	0.29	1.2 (0.71)	0.11 (0.30)
		PAB connection	1.1	0.31	1.0 -	0.15 -
MN3GB2 MN4GB2	Two 3-port valves integrated		1.7	0.42	2.2 (1.6)	0.15 (0.19)
	2-position		2.4	0.35	2.5 (1.7)	0.19 (0.19)
	3-position	All ports closed	2.2	0.38	2.3 -	0.17 -
		ABRConnection	2.2	0.38	2.5 (1.7)	0.18 (0.20)
		PAB connection	2.3	0.29	2.3 -	0.15 -

*1: Effective cross-sectional area S and sonic conductance C are converted as S ≈ 5.0 x C.
*2: Values in ( ) are with the exhaust check valve.

Sensor specifications

Discrete specifications

Item		Positive pressure	Negative pressure *2
Working pressure *1		0 to 1.0 MPa	-100kPa to 0
Service voltage		10.8 to 30.0 VDC	
Current consumption		5 mA (24 VDC, no load)	
Pressure detection method		Diffused semiconductor pressure switch	
Ambient temperature		0 to 55°C	
Proof pressure		1.5 MPa	0.5 MPa
Degree of protection		Dust-proof	
Analog output	Output voltage	1 to 5V	
	Zero point voltage	1±0.1V	
	Linearity	±0.5% F.S. max	
	Temperature characteristics	±2% F.S. max	
	Output current	0.5mA max. (load resistance 10 kΩ)	
Wiring method		Connector connection	
Wire length		1000 mm	

Lead wire color and content

Line color	Description
Brown	Power supply (10.8 to 30.0 VDC)
Black	Analog output (1 to 5 V)
Blue	GND(0V)

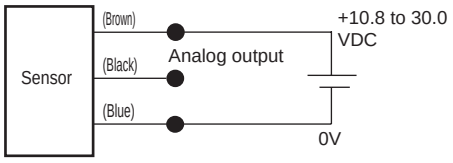

*1 Use the smaller working pressure range for the valve or pressure sensor.
*2 For negative pressure, only the single unit sensor is supported.

Analog output

● Positive pressure

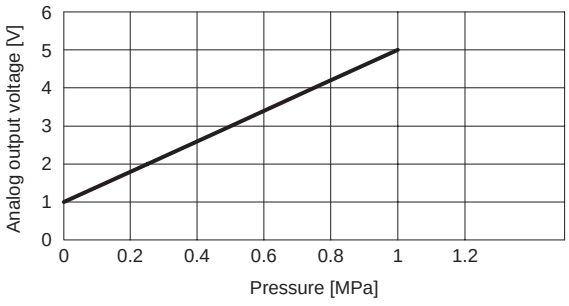

● Negative pressure

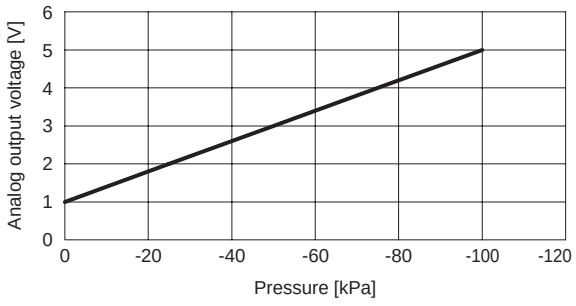

MN4GB1/2 Series

Individual wiring block manifold; base piping

How to order

Manifold model No.

MN4GB1 1 0 R - C6 - E2 H - 10 - 3

3-port manifold model No.

MN3GB1 66 0 R - C6 - E2 H - 10 - 3

Discrete valve block with solenoid valve

N4GB1 1 0 R - C6 - E2 H — 3

Discrete 3-port valve block with solenoid valve

N3GB1 66 0 R - C6 - E2 H — 3

Single solenoid valve

4GB1 1 9 R - 00 - E2 H — 3

Discrete 3-port solenoid valve

3GB1 66 9 R - 00 - E2 H — 3

Ⓐ Model No.

Ⓑ Solenoid position

Ⓒ Port size (*1)(*2) (*3)

Ⓓ Electrical connections

Ⓔ Option

Ⓕ Station No.

Ⓖ Voltage

⚠ Precautions for model selection

*1 : Ports A and B plug specifications are available for 2-position single only. Specify the port P/R bore size with the supply and exhaust block model No. on the manifold specifications sheet.

*2 : Ports A and B are the same size for push-in L-fitting mix (CX).

*3 : For a discrete solenoid valve, select 00 for port size.

*4 : Select MN4GB*80R when mixing with 4, 5-port valves. Further, select MN3GB*80R when mixing with masking plate.

*5 : Not compatible in combination with external pilot (K). Dimensions are the same as those of the respective 2-position double solenoid.

*6 : Simultaneously select option "L" for types other than single solenoid.

*7 : The push-in fitting cannot be mixed with the discrete valve's 4(A) or 2(B) port.

*8 : Available only for single solenoids.

Ozone-proof specifications • Coolant proof specifications

Page 383 Select option "A" of Item Ⓔ in How to order.

Specifications for rechargeable battery (Catalog No. CC-1226A)

● For use in the rechargeable battery manufacturing process, materials used for air path and sliding section are limited

** - Voltage - P4

Clean-room specifications

● Anti-dust generation structure for use in cleanrooms

** - Voltage - P7*

CE marking specifications

** - Voltage - ST

• Standard voltage of 24 VDC or less is CE marking-compatible even if the model No. is not indicated with "ST".

Code	Description		Ⓐ Model No.							
			Manifold							
			Two 3-port valves integrated		5-port valve		Discrete valve block with solenoid valve/ discrete solenoid valve			
			MN3GB1	MN3GB2	MN4GB1	MN4GB2	(N)3GB1	(N)3GB2	(N)4GB1	(N)4GB2
Ⓑ Solenoid position										
1	2 position single				●	●			●	●
2	2-position double				●	●			●	●
3	3-position all ports closed				●	●			●	●
4	3-position ABR connection				●	●			●	●
5	3-position PAB connection				●	●			●	●
66	3-port valve Two valves integrated (*4))(*5)	A side valve: Normally closed B side valve: Normally closed	●	●			●	●		
67		A side valve: Normally closed B side valve: Normally open	●	●			●	●		
76		A side valve: Normally open B side valve: Normally closed	●	●			●	●		
77		A side valve: Normally open B side valve: Normally open	●	●			●	●		
8	Mix manifold (when there are multiple solenoid positions)		●	●	●	●	●	●	●	●
Ⓒ Port size (port A/B)										
Type	Metric fittingRc thread									
CF	ø1.8 barbed fitting (compatible tube UP-9102-**)		●		●		●		●	
C18	ø1.8 push-in fitting (compatible tube UP-9402-**)		●		●		●		●	
C4	ø4 push-in fitting		●	●	●	●	●	●	●	●
C6	ø6 push-in fitting		●	●	●	●	●	●	●	●
C8	ø8 push-in fitting			●		●		●		●
CL18	ø1.8 push-in L-fitting upward (compatible tube UP-9402-**)	(*6)	●		●		●		●	
CL4	ø4 push-in L-fitting (upward)	(*6)	●		●		●		●	
CL6	ø6 push-in L-fitting (upward)	(*6)	●	●	●	●	●	●	●	●
CL8	ø8 push-in L-fitting (upward)	(*6)		●		●		●		●
CD18	ø1.8 push-in L-fitting downward (compatible tube UP-9402-**)		●		●		●		●	
CD4	ø4 push-in L-fitting (downward)		●		●		●		●	
CD6	ø6 push-in L-fitting (downward)		●	●	●	●	●	●	●	●
CD8	ø8 push-in L-fitting (downward)			●		●		●		●
CX	Push-in fitting mix	(*7)	●	●	●	●				
Single side plug specs	Port A	Port B								
CFNC	ø1.8 barbed fitting (compatible tube UP-9102-**)	Plug			●				●	
C18NC	ø1.8 push-in fitting (compatible tube UP-9402-**)				●				●	
C4NC	ø4 push-in fitting				●	●			●	●
C6NC	ø6 push-in fitting				●	●			●	●
C8NC	ø8 push-in fitting					●				●
CFNO	Plug	ø1.8 barbed fitting (compatible tube UP-9102-**)			●				●	
C18NO		ø1.8 push-in fitting (compatible tube UP-9402-**)			●				●	
C4NO		ø4 push-in fitting			●	●			●	●
C6NO		ø6 push-in fitting			●	●			●	●
C8NO		ø8 push-in fitting				●				●
CL18NC	ø1.8 push-in L-fitting upward (compatible tube UP-9402-**)	Plug			●				●	
CL4NC	ø4 push-in L-fitting (upward)				●				●	
CL6NC	ø6 push-in L-fitting (upward)				●	●			●	●
CL8NC	ø8 push-in L-fitting (upward)					●				●
CL18NO	Plug	ø1.8 push-in L-fitting upward (compatible tube UP-9402-**)			●				●	
CL4NO		ø4 push-in L-fitting (upward)			●				●	
CL6NO		ø6 push-in L-fitting (upward)			●	●			●	●
CL8NO		ø8 push-in L-fitting (upward)				●				●
CD18NC	ø1.8 push-in L-fitting downward (compatible tube UP-9402-**)	Plug			●				●	
CD4NC	ø4 push-in L-fitting (downward)				●				●	
CD6NC	ø6 push-in L-fitting (downward)				●	●			●	●
CD8NC	ø8 push-in L-fitting (downward)					●				●
CD18NO	Plug	ø1.8 push-in L-fitting downward (compatible tube UP-9402-**)			●				●	
CD4NO		ø4 push-in L-fitting (downward)			●				●	
CD6NO		ø6 push-in L-fitting (downward)			●	●			●	●
CD8NO		ø8 push-in L-fitting (downward)				●				●
Type	Inch fittingInch thread									
C3N	ø1/8" push-in fitting		●		●		●		●	
C4N	ø5/32" push-in fitting		●		●		●		●	
C6N	ø1/4" push-in fitting			●		●		●		●
C8N	ø5/16" push-in fitting			●		●		●		●
CL3N	ø1/8" push-in L-fitting (upward)	(*8)								
CL4N	ø5/32" push-in L-fitting (upward)	(*8)								
CL6N	ø1/4" push-in L-fitting upward	(*8)								
CL8N	Radial ø5/16 push-in fitting (upward)	(*8)								
CXN	Push-in fitting mix	(*7)	●	●	●	●				
Single side plug specs	Port A	Port B								
C3NCN	ø1/8" push-in fitting	Plug			●				●	
C4NCN	ø5/32" push-in fitting				●				●	
C6NCN	ø1/4" push-in fitting					●				●
C8NCN	ø5/16" push-in fitting					●				●
C3NON	Plug	ø1/8" push-in fitting			●				●	
C4NON		ø5/32" push-in fitting			●				●	
C6NON		ø1/4" push-in fitting				●				●
C8NON		ø5/16" push-in fitting				●				●
CL3NCN	ø1/8" push-in L-fitting (upward)	Plug								
CL4NCN	ø5/32" push-in L-fitting (upward)									
CL6NCN	ø1/4" push-in L-fitting upward									
CL8NCN	Radial ø5/16 push-in fitting (upward)									
CL3NON	Plug	ø1/8" push-in L-fitting (upward)								
CL4NON		ø5/32" push-in L-fitting (upward)								
CL6NON		ø1/4" push-in L-fitting upward								
CL8NON		Radial ø5/16 push-in fitting (upward)								
00	Discrete valve for integrated base						●	●	●	●

is not available. ○ indicates made to order.

[Options, stations, voltage, electrical connection list]

Code	Description		Ⓐ Model No. Manifold: Two 3-port valves integrated: MN3GB1	MN3GB2	5-port valve: MN4GB1	MN4GB2	Discrete valve block with solenoid valve/discrete solenoid valve: (N)3GB1	(N)3GB2	(N)4GB1	(N)4GB2
Ⓓ Electrical connections										
Blank	Grommet lead wire (300 mm)	(*17)	●	●	●	●	●	●	●	●
B	DIN terminal box (Pg7)	with surge suppressor/lamp (*18) (*21)		●		●		●		●
BN	DIN terminal box (Pg7) (no terminal box)	with surge suppressor/lamp (*18) (*21)		●		●		●		●
E-connector (upward/lateral direction common)										
E0	Lead wire (300 mm)	(*19)	●	●	●	●	●	●	●	●
E00	Lead wire (500 mm)	(*19)	●	●	●	●	●	●	●	●
E01	Lead wire (1000 mm)	(*19)	●	●	●	●	●	●	●	●
E02	Lead wire (2000 mm)	(*19)	●	●	●	●	●	●	●	●
E03	Lead wire (3000 mm)	(*19)	●	●	●	●	●	●	●	●
E0N	Without lead wire (no socket)	(*19)	●	●	●	●	●	●	●	●
E1	Without lead wire (socket/terminal included)	(*19)	●	●	●	●	●	●	●	●
E2	Lead wire (300 mm)	With surge suppressor/lamp	●	●	●	●	●	●	●	●
E20	Lead wire (500 mm)	With surge suppressor/lamp	●	●	●	●	●	●	●	●
E21	Lead wire (1000 mm)	With surge suppressor/lamp	●	●	●	●	●	●	●	●
E22	Lead wire (2000 mm)	With surge suppressor/lamp	●	●	●	●	●	●	●	●
E23	Lead wire (3000 mm)	With surge suppressor/lamp	●	●	●	●	●	●	●	●
E2N	Without lead wire (without socket)	With surge suppressor/lamp	●	●	●	●	●	●	●	●
E3	Without lead wire (with socket/terminal)	With surge suppressor/lamp	●	●	●	●	●	●	●	●
EJ-connector (socket with cover, upward/lateral direction common)										
E01J	Lead wire (1000 mm)	(*19)	●	●	●	●	●	●	●	●
E02J	Lead wire (2000 mm)	(*19)	●	●	●	●	●	●	●	●
E03J	Lead wire (3000 mm)	(*19)	●	●	●	●	●	●	●	●
E21J	Lead wire (1000 mm)	With surge suppressor/lamp	●	●	●	●	●	●	●	●
E22J	Lead wire (2000 mm)	With surge suppressor/lamp	●	●	●	●	●	●	●	●
E23J	Lead wire (3000 mm)	With surge suppressor/lamp	●	●	●	●	●	●	●	●
Ⓔ Option										
Blank	Non-locking/locking common manual override		●	●	●	●	●	●	●	●
M	Non-locking manual override		●	●	●	●	●	●	●	●
H	With exhaust check valve	(*9)	●	●	●	●	●	●	●	●
K	External pilot	(*10)			●	●			●	●
A	Ozone/coolant proof		●	●	●	●	●	●	●	●
S	Surgeless	(*11)	●	●	●	●	●	●	●	●
E	Low exoergic/energy saving circuit	(*11) (*12)	●	●	●	●	●	●	●	●
L	With piping adapter		●	●	●	●	●	●	●	●
F	A/B port filter integrated	(*13)	●	●	●	●	●	●	●	●
G1	With sensor (1-port detection type)	(*22) (*23)			●	●				
G2	With sensor (2-port detection type)	(*23)	●	●	●	●				
Z1	Air supply spacer	(*14)	●	●	●	●				
Z2	In-stop valve spacer	(*14) (*15)	●	●	●	●				
Z3	Exhaust spacer	(*14)	●	●	●	●				
Z6	Spacer pilot check valve	(*14) (*20)				●				
Ⓕ Station No.										
1	1 station		●	●	●	●				
to	to									
24	24 stations (max. station No. for MN4GB2 is 20)									
Ⓖ Voltage										
1	100 VAC (rectifier integrated)		●	●	●	●	●	●	●	●
2	200 VAC (rectifier integrated)	(*16)		●		●		●		●
3	24 VDC		●	●	●	●	●	●	●	●
4	12 VDC		●	●	●	●	●	●	●	●
7	3 VDC		○	○	○	○	○	○	○	○
8	5 VDC		○	○	○	○	○	○	○	○

is not available.
○ indicates made to order.

*9 : 3-position all ports closed and PAB connection are not provided with the exhaust check valve specifications (H). Refer to page 851 for details on the exhaust check valve.
*10: Consult with CKD when using vacuum with external pilot (K).
*11: In addition, surgeless "S" and low exoergic/energy saving circuit "E" cannot be selected together.
*12: Surgeless specifications.
*13: A filter is built into port P as standard.
*14: Specify the spacer mounting position and quantity on the manifold specifications sheet. Stacking of spacers is not possible. Combination with the masking plate is not supported. Only single solenoid can be selected together with push-in L-fitting (upward). For details, refer to page 410 to page 414.
*15: Not compatible when combined with external pilot (K).
*16: Only the DIN terminal box is supported.
*17: The grommet lead wire specifications are compatible with DC voltage only.
*18: AC voltages and 12/24 VDC are supported. In addition, a lamp comes with the terminal box.
*19: AC voltage includes a rectifier circuit.
*20: Combination with push-in L-fittings (upward) is not supported.
*21: The terminal box conforms to EN175301-803 Type C (former DIN 43650-C). Details on pages 856 and 857.
*22: Single and double only.
*23: The pressure range is 0 to 0.7 MPa.

Manifold configuration explanation and parts list

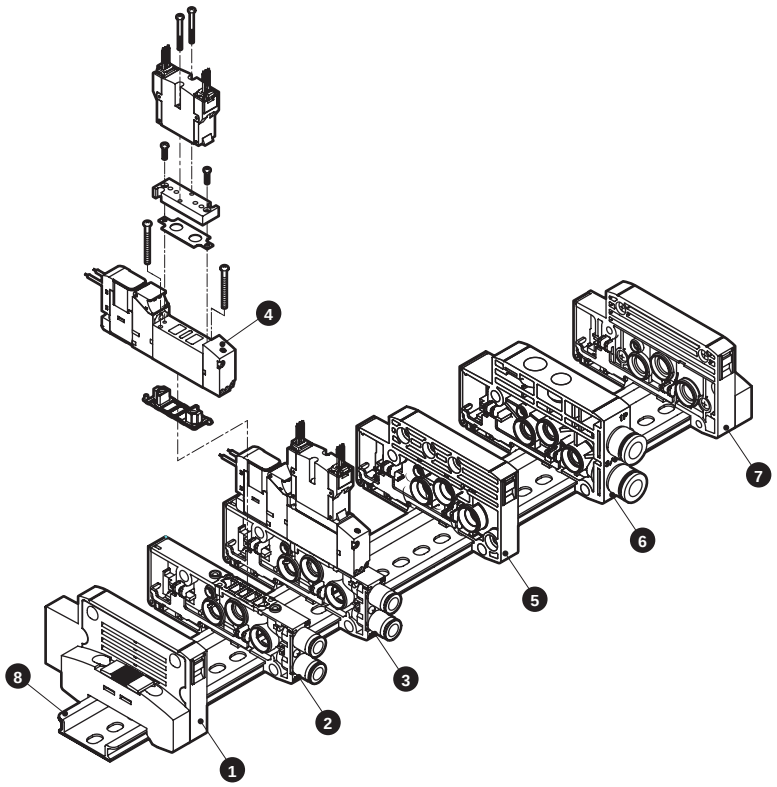

List of main components (refer to pages 400 to 417 for details)

No.	Component name	Model No. (example)	No.	Component name	Model No. (example)
1	End block L	N4G1R-EL	5	Partition block	N4G1R-S
2	Discrete valve block	N4GB1R-V1-C6	6	Supply and exhaust block	N4G1R-Q-8
3	Discrete valve block with solenoid valve	N4GB110R-C6-H-3	7	End block R	N4G1R-ER
4	Solenoid valve body	4GB119R-00-H-3	8	DIN rail	N4GR-BAA (length)

Individual wiring weight

4GB1 (g)

Part name	Model No.	Weight	Part name	Model No.	Weight
Valve block with solenoid valve	N4GB110R-C6	67	Supply and exhaust block	N4G1R-Q-8	58
	N4GB120R-C6	84		N4G1R-QK-8	60
	N4GB1$\frac{3}{5}$0R-C6	85	End block	N4G1R-E*	60
	N3GB1660R-C6-3	84		N4G1R-EX*	60
Valve block with masking plate	N4GB1R-MP-C6	37	Partition block	N4G1R-S	45
			Valve block	N4GB1R-V1-C*	33
			DIN rail	N4GR-BAA*	0.19/mm

4GB2 (g)

Part name	Model No.	Weight	Part name	Model No.	Weight
Valve block with solenoid valve	N4GB210R-C8	128	Supply and exhaust block	N4G2R-Q-10	83
	N4GB220R-C8	145		N4G2R-QK-10	85
	N4GB2$\frac{3}{5}$0R-C8	156	End block	N4G2R-E*	84
	N4GB2660R-C8-3	145		N4G2R-EX*	85
Valve block with masking plate	N4GB2R-MP-C8	69	Partition block	N4G2R-S	60
			Valve block	N4GB2R-V1-C*	55
			DIN rail	N4GR-BAA*	0.19/mm

Parts list

Compatible product(s)	Part name		Model No.
Valve 4G1	ø1.8 barbed		4G1R-JOINT-CF
	ø1.8 straight		4G1R-JOINT-C18
	ø4 straight		4G1R-JOINT-C4
	ø6 straight		4G1R-JOINT-C6
	ø1.8 elbow		4G1R-JOINT-CL18, CLL18
	ø4 elbow		4G1R-JOINT-CL4, CLL4
	ø6 elbow		4G1R-JOINT-CL6, CLL6
	ø1/8" straight		4G1R-JOINT-C3N
	ø5/32" straight		4G1R-JOINT-C4N
	ø1/8" elbow	(*1)	4G1R-JOINT-CL3N
	ø5/32" elbow	(*1)	4G1R-JOINT-CL4N
	Plug cartridge		4G1R-JOINT-CPG
Valve 4G2	ø4 straight		4G2R-JOINT-C4
	ø6 straight		4G2R-JOINT-C6
	ø8 straight		4G2R-JOINT-C8
	ø6 elbow		4G2R-JOINT-CL6, CLL6
	ø8 elbow		4G2R-JOINT-CL8, CLL8
	ø1/4" straight		4G2R-JOINT-C6N
	ø5/16" straight		4G2R-JOINT-C8N

Compatible product(s)	Part name		Model No.
Valve 4G2	ø1/4" elbow	(*1)	4G2R-JOINT-CL6N
	ø5/16" elbow	(*1)	4G2R-JOINT-CL8N
	Plug cartridge		4G2R-JOINT-CPG
Common	Coil assembly		4GR-[*1]-[*2]-COIL-[*3] *1: Electrical connections (blank, B, E0, ...), *2: Ozone/coolant proof (blank, A) Surgeless (S) Low exoergic/energy saving circuit (E) External pilot (K) *3: Voltage (1, 2, 3, 4)
	E-connector socket assembly		4GR-SOCKET-ASSY-[*1]-[*3] *1: Electrical connections (E0, E00, ...), *3: Voltage (1, 3, 4)
	EJ-connector socket assembly		4GR-SOCKET-ASSY-[*1] *1: Electrical connections (E01J, E02J, ...)
Valve 4G2	DIN terminal box assembly		4GR-TERMINAL-BOX-[*3] *3: Voltage (1, 2, 3, 4)

*1: Available as made to order.

Dimensions

MN4GB1

● Grommet lead wire (blank)

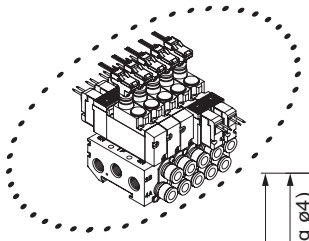

* For the 2-position single 3-port valve, either port A or port B is a plug. In addition, the two 3-port valve built-in type has the same dimensions as the double model.

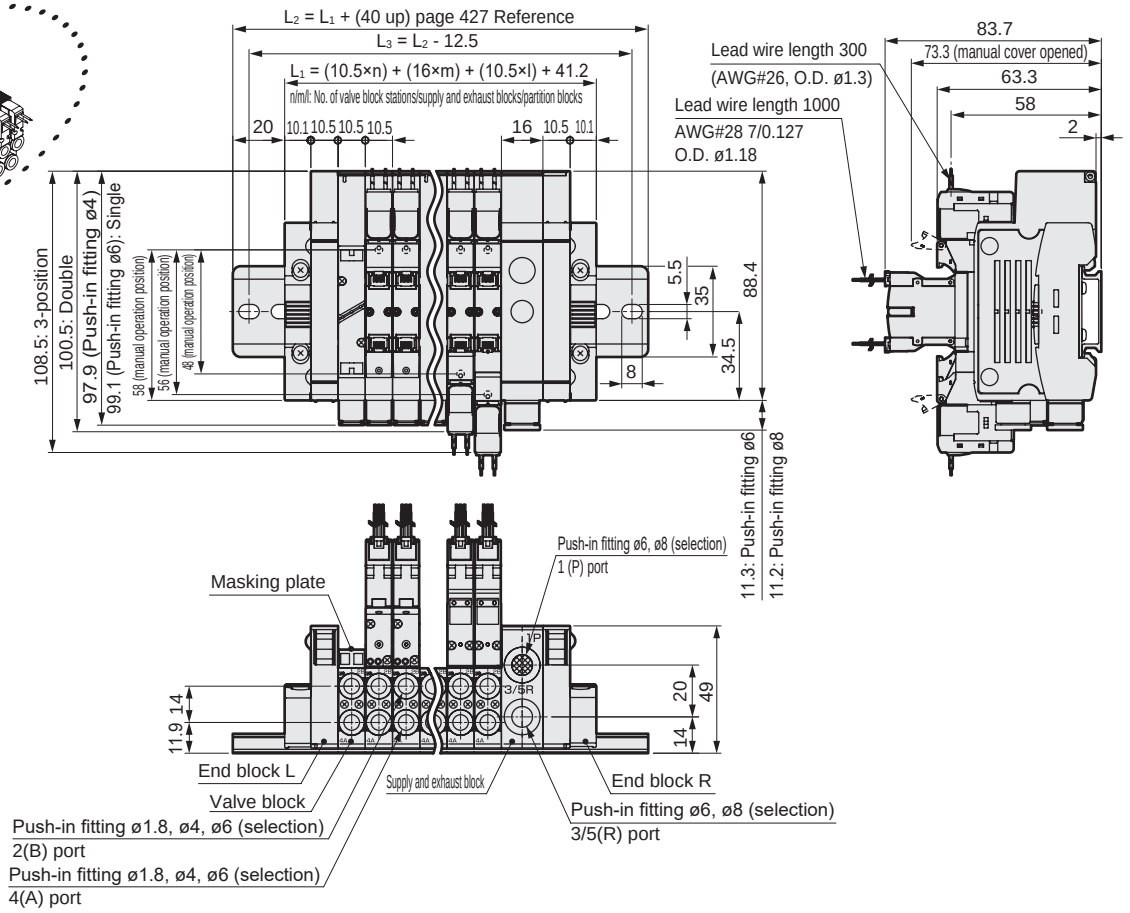

MN4GB2

● Grommet lead wire (blank)

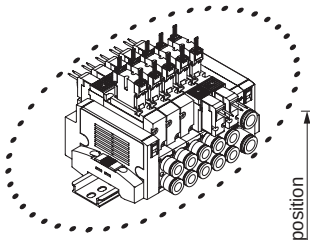

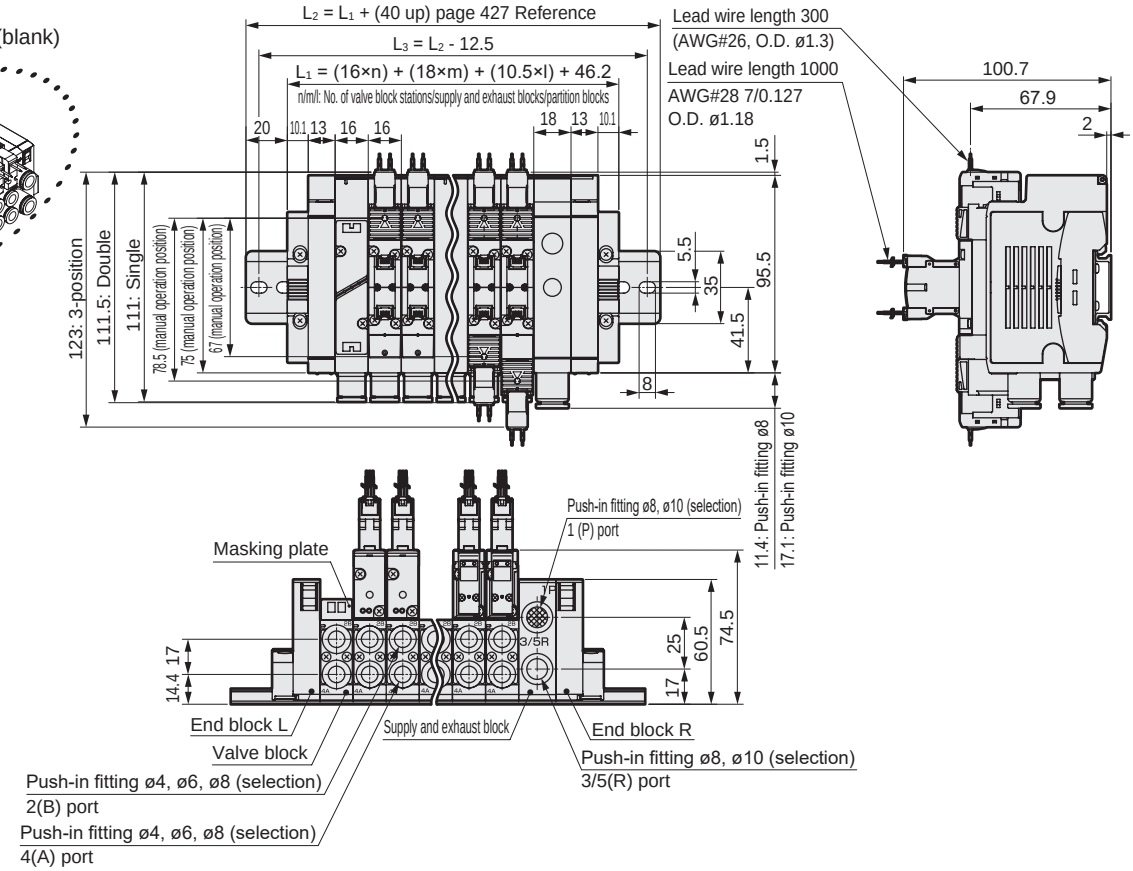

* Refer to pages 276 to 279 for dimensions of the valve block push-in fitting and supply and exhaust block push-in fitting.

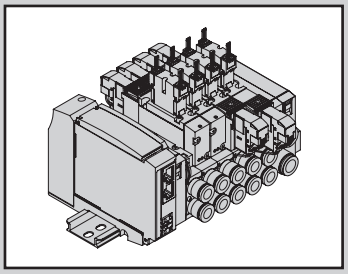

Reduced wiring block manifold
Base piping

With pressure sensor

MN4GB1/2-T* Series

● Applicable cylinder bore size: ø20 to ø80

RoHS CAD

JIS symbol

● Two 3-port valves integrated

(A side valve: NC, B side valve: NC)

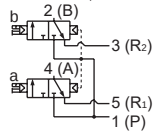

(A side valve: NC, B side valve: NO)

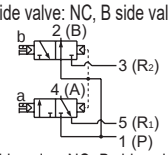

(A side valve: NO, B side valve: NC)

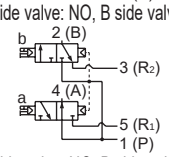

(A side valve: NO, B side valve: NO)

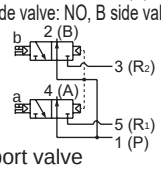

● 5-port valve

2-position single

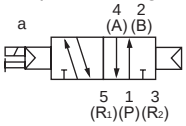

2-position double

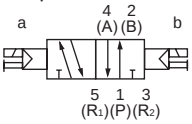

3-position
All ports closed

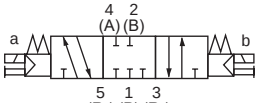

3-position A/B/R connection

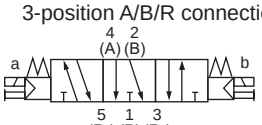

3-position P/A/B connection

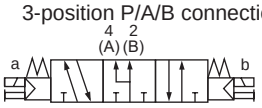

Manifold common specifications

1 MPa ≈ 145.0 psi, 1 MPa = 10 bar

Item	Description
Manifold	Block manifold
Mounting method	DIN rail mount
Air supply and exhaust method	Common supply/common exhaust (With internal exhaust check valve)
Pilot exhaust method	Main valve/pilot valve common exhaust (Pilot exhaust check valve built-in)
Piping direction	Side direction of base
Valve and operation	Pilot operated soft spool valve
Working fluid	Compressed air
Max. working pressure MPa	0.7 (≈101 psi, 7 bar)
Min. working pressure MPa	0.2 (≈29 psi, 2 bar) (*3)
Proof pressure MPa	1.05 (≈152 psi, 10 bar)
Ambient temperature °C	-5 (23°F) to 55 (131°F) (no freezing)
Fluid temperature °C	5 (41°F) to 55 (131°F)
Manual override	Non-locking/locking common (standard)
Lubrication (*1)	Not required
Degree of protection (*2)	Dust-proof
Vibration resistance m/s^2	50 or less
Shock resistance m/s^2	300 or less
Atmosphere	Cannot be used in corrosive gas environments

Electrical specifications

Item		Description		
Rated voltage V		T1□, T30□, T5□ 24 DC	12 DC	T6G1, T7□, T8□ 24 DC
Voltage fluctuation range (*4)		±10%		+10%, -5%
Holding current A	Standard	0.017	0.034	0.017
	With low exoergic/energy circuit	0.005	0.010	0.005
Power consumption W	Standard	0.4		
	With low exoergic/energy circuit	0.1		
Thermal class		B		
Surge suppressor (*5)		Zener diode		
Indicator		LED		

*1: Use turbine oil Class 1 ISO VG32 for lubrication. Excessive or intermittent lubrication results in unstable operation.
*2: Dust-proof degree of protection. Not drip-proof. Avoid dripping water or oil, etc., during use.
*3: The working pressure range is 0 to 0.7 MPa when external pilot (option code: K) is selected. Set the external pilot pressure between 0.2 and 0.7 MPa.
*4: T6G1, T7□ and T8□ (serial transmission) may experience voltage drops due to internal circuitry, so care should be taken with the voltage fluctuation range.
*5: When selecting low exoergic/energy saving circuit or surgeless, a diode will be used.

Individual specifications

Item			MN3GB1/MN4GB1									
			T10	T11	T30	T50	T51	T52	T53	T6G1	T7*1	T8*1/2
Max. station No.		Standard wiring	16 stations	24 stations	24 stations	16 stations	18 stations	8 stations	24 stations	16 stations	8/16 stations	16/24 stations
		Double wiring	8 stations	12 stations	12 stations	8 stations	9 stations	4 stations	12 stations	8 stations	4/8 stations	8/16 stations
Max. number of solenoids			16 points	24 points	24 points	16 points	18 points	8 points	24 points	16 points	8/16 points	16/32 points
Port size	Metric fitting	Port A/B	Barbed fitting ø1.8 Push-in fitting ø1.8, ø4, ø6									
		Port P/R	Push-in fitting ø6, ø8									
	Inch fitting	Port A/B	Push-in fitting ø1/8", ø5/32"									
		Port P/R	Push-in fitting ø1/4", ø5/16"									

· Refer to page 392 for weight.

Item			MN3GB2/MN4GB2									
			T10	T11	T30	T50	T51	T52	T53	T6G1	T7*1	T8*1/2
Max. station No.		Standard wiring	16 stations	20 stations	20 stations	16 stations	18 stations	8 stations	20 stations	16 stations	8/16 stations	16/20 stations
		Double wiring	8 stations	12 stations	12 stations	8 stations	9 stations	4 stations	12 stations	8 stations	4/8 stations	8/16 stations
Max. number of solenoids			16 points	24 points	24 points	16 points	18 points	8 points	24 points	16 points	8/16 points	16/32 points
Port size	Metric fitting	Port A/B	Push-in fitting ø4, ø6, ø8									
		Port P/R	Push-in fitting ø8, ø10									
	Inch fitting	Port A/B	Push-in fitting ø1/4", ø5/16"									
		Port P/R	Push-in fitting ø5/16", ø3/8"									

· Refer to page 392 for weight.

Flow characteristics

Model No.	Solenoid position		P→A/B C[dm^3/(s·bar)]	P→A/B b	A/B→R1/R2 C[dm^3/(s·bar)]	A/B→R1/R2 b
MN3GB1 MN4GB1	Two 3-port valves integrated		0.86	0.35	1.0 (0.66)	0.15 (0.25)
	2-position		1.0	0.30	1.1 (0.72)	0.11 (0.26)
	3-position	All ports closed	0.96	0.32	1.0 -	0.14 -
		ABR connection	0.96	0.29	1.2 (0.71)	0.11 (0.30)
		PAB connection	1.1	0.31	1.0 -	0.15 -
MN3GB2 MN4GB2	Two 3-port valves integrated		1.7	0.42	2.2 (1.6)	0.15 (0.19)
	2-position		2.4	0.35	2.5 (1.7)	0.19 (0.19)
	3-position	All ports closed	2.2	0.38	2.3 -	0.17 -
		ABR connection	2.2	0.38	2.5 (1.7)	0.18 (0.20)
		PAB connection	2.3	0.29	2.3 -	0.15 -

*1: Effective cross-sectional area S and sonic conductance C are converted as S ≈ 5.0 × C.
*2: Values in ( ) are with the exhaust check valve.

Reduced wiring specifications

Item	T10	T11	T30	T50	T51	T52	T53
Type	Common terminal block M3 thread	Common terminal block Clamping method	D-sub-connector	20-pin flat cable connector (with power supply terminal)	20-pin flat cable connector, no power supply terminal	10-pin flat cable connector, no power supply terminal	26-pin flat cable connector, no power supply terminal
Connector	—	—	D-sub-connector 25-pin	MIL-C-83503 standard compliant pressure welding socket 20-pin	MIL-C-83503 standard compliant pressure welding socket 20-pin	MIL-C-83503 standard compliant pressure welding socket 10-pin	MIL-C-83503 standard compliant pressure welding socket 26-pin

Serial transmission device unit specifications

Download the communication setting file from the CKD website (https://www.ckd.co.jp/en/).

Item		T6G1
Network name		CC-Link ver. 1.10
Power supply voltage	Unit side	24 VDC ±10%
	Valve side	24 VDC 10%, -5%
Current consumption	Unit side	100 mA or less (when all output points are ON)
	Valve side	15 mA or less (when all output points are OFF)
No. of output points		16 points
Occupied number		1 station
Operation display		LED (power supply and communication status)
Output		NPN

Item		T7G1	T7L1*1	T7D1	T7S1	T7SP1
Network name		CC-Link ver. 1.10	SAVE NET	DeviceNet*2,*3	CompoNet	
Power supply voltage	Unit side	24 VDC 10%, -5% Common power supply terminal				
	Valve side					
	Communication side	—	—	11 to 25 VDC *4	14.0 VDC to 26.4V	
Current consumption	Unit side	110 mA or less (when all output points are ON) Load current is not included			40 mA or less (when all output points are ON) Load current is not included	
	Valve side					
	Communication side	—	—	50 mA or less	65mA or less (all points ON: 24 VDC) 95 mA or less (all points ON: 14 VDC)	
No. of output points		16 points	16 points	16 points	16 points	
Occupied number		1 station	1 station	2 bytes	Word device 1 node (16 points)	
Operation display		LED(Power supply and communication status)				
Output		NPN				PNP

Item		T8G1 / T8G2	T8GP1 / T8GP2	T8P1 / T8P2	T8PP1 / T8PP2	T8EC1 / T8EC2	T8ECP1 / T8ECP2	T8EN1 / T8EN2	T8ENP1 / T8ENP2	T8D1 / T8D2	T8DP1 / T8DP2	T8EB1 / T8EB2	T8EBP1 / T8EBP2	T8EP1 / T8EP2	T8EPP1 / T8EPP2
Communication protocol		CC-Link ver. 1.10		PROFIBUS-DP (V0)		EtherCAT		EtherNet/IP		DeviceNet		CC-Link IEF Basic		PROFINET	
Power supply voltage	Unit side	24 VDC ±10%								11 to 25 VDC		24 VDC ±10%			
	Valve side	24 VDC+10%, -5%													
Current consumption	Unit side	60 mA or less (when all output points are ON)		60 mA or less (when all output points are ON)		110 mA or less (when all output points are ON)		120 mA or less (when all output points are ON)		70 mA or less (when all output points are ON)		130 mA or less (when all output points are ON)		130 mA or less (when all output points are ON)	
	Valve side	T8 □1: 15mA or less T8 □ 2:20mA or less (when all output points are ON) Load current is not included								15 mA or less (When all output points are ON) Load current is not included					
No. of output points		T8 □ 1:16 points T8 □ 2:32 points													
Occupied number		1 station													
Operation display		LED(Power supply and communication status)													
Output		NPN output	PNP output	NPN output	PNP output	NPN output	PNP output	NPN output	PNP output	NPN output	PNP output	NPN output	PNP output	NPN output	PNP output

*1 Transmission bit rate of 128 bits and half-duplex transmission method are supported. Contact CKD for other specifications.
*2 DeviceNet compliant networks (DLNK, etc.) are supported as well.
*3 Contact CKD for EDS file. EDS file: A text file of parameters for communication with various companies' master units
*4 Communication power supply (V+ and V- of DeviceNet cable) is isolated from power supply terminals (unit power supply/valve power supply).

Sensor specifications

Discrete specifications

Item		Positive pressure	Negative pressure *2
Working pressure *1		0 to 1.0 MPa	-100kPa to 0
Service voltage		10.8 to 30.0 VDC	
Current consumption		5 mA (24 VDC, no load)	
Pressure detection method		Diffused semiconductor pressure switch	
Ambient temperature		0 to 55°C	
Proof pressure		1.5 MPa	0.5 MPa
Degree of protection		Dust-proof	
Analog output	Output voltage	1 to 5V	
	Zero point voltage	1±0.1V	
	Linearity	±0.5% F.S. max	
	Temperature characteristics	±2% F.S. max	
	Output current	0.5mA max. (load resistance 10 kΩ)	
Wiring method		Connector connection	
Wire length		1000 mm	

Lead wire color and content

Line color	Description
Brown	Power supply (10.8 to 30.0 VDC)
Black	Analog output (1 to 5 V)
Blue	GND(0V)

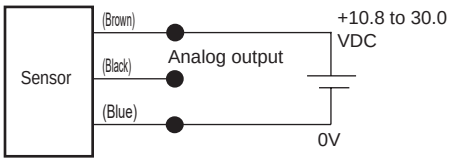

*1 Use the smaller working pressure range for the valve or pressure sensor.
*2 For negative pressure, only the single unit sensor is supported.

Analog output

● Positive pressure

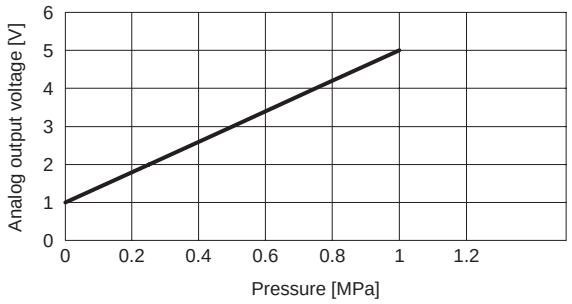

● Negative pressure

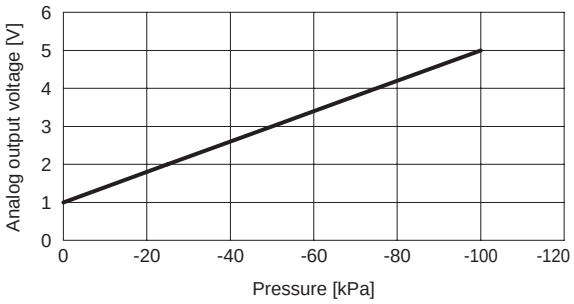

MEMO

MN4GB1/2-T* Series

Reduced wiring block manifold; base piping

How to order

● Manifold model No.

MN4GB1 **1** **0** **R** - **C6** - **T30** **W** **H** - **10** - **3**

● 3-port manifold model No.

MN3GB1 **66** **0** **R** - **C6** - **T30** **W** **H** - **10** - **3**

● Discrete valve block with solenoid valve

N4GB1 **1** **0** **R** - **C6** - A2N *1 **H** — **3**

● Discrete 3-port valve block with solenoid valve

N3GB1 **66** **0** **R** - **C6** - A2N *1 **H** — **3**

* When a cable is required, refer to page 404 and specify the cable length for *1. When not required, leave the space blank.

● Single solenoid valve

4GB1 **1** **9** **R** - **00** - **A2N** **H** — **3**

● Discrete 3-port solenoid valve

3GB1 **66** **9** **R** - **00** - **A2N** **H** — **3**

- A Model No.
- B Solenoid position
- C Port size (*1) (*2) (*3)
- D Reduced wiring connection
- E Terminal/connector pin array
- F Option
- G Station No.
- H Voltage

Code	Description		A Model No. Manifold: Two 3-port valves integrated: MN3GB1	MN3GB2	5-port valve: MN4GB1	MN4GB2	Discrete valve block with solenoid valve/discrete solenoid valve: (N)3GB1	(N)3GB2	(N)4GB1	(N)4GB2
B Solenoid position										
1	2-position single				●	●			●	●
2	2-position double				●	●			●	●
3	3-position all ports closed				●	●			●	●
4	3-position ABR connection				●	●			●	●
5	3-position PAB connection				●	●			●	●
66	Two 3-port valves integrated (*4) (*5)	A side valve: Normally closed B side valve: Normally closed	●	●			●	●		
67		A side valve: Normally closed B side valve: Normally open	●	●			●	●		
76		A side valve: Normally open B side valve: Normally closed	●	●			●	●		
77		A side valve: Normally open B side valve: Normally open	●	●			●	●		
8	Mix manifold (for multiple solenoid positions)		●	●	●	●	●	●	●	●
C Port size (ports A/B)										
Type	**Metric fitting/Rc thread**									
CF	ø1.8 barbed fitting (compatible tube UP-9102-**)		●		●		●		●	
C18	ø1.8 push-in fitting (compatible tube UP-9402-**)		●		●		●		●	
C4	ø4 push-in fitting		●	●	●	●	●	●	●	●
C6	ø6 push-in fitting		●	●	●	●	●	●	●	●
C8	ø8 push-in fitting			●		●		●		●
CL18	ø1.8 push-in L-fitting upward (Compatible tube UP-9402-**)	(*6)	●		●		●		●	
CL4	ø4 push-in L-fitting upward	(*6)	●		●		●		●	
CL6	ø6 push-in L-fitting upward	(*6)	●	●	●	●	●	●	●	●
CL8	ø8 push-in L-fitting upward	(*6)		●		●		●		●
CD18	ø1.8 push-in L-fitting downward (compatible tube UP-9402-**)		●		●		●		●	
CD4	ø4 push-in L-fitting (downward)		●		●		●		●	
CD6	ø6 push-in L-fitting (downward)		●	●	●	●	●	●	●	●
CD8	ø8 push-in L-fitting (downward)			●		●		●		●
CX	Push-in fitting mix	(*7)	●	●	●	●				
Single side plug specifications	Port A	Port B								
CFNC	ø1.8 barbed fitting (compatible tube UP-9102-**)	Plug			●				●	
C18NC	ø1.8 push-in fitting (compatible tube UP-9402-**)	Plug			●				●	
C4NC	ø4 push-in fitting	Plug			●	●			●	●
C6NC	ø6 push-in fitting	Plug			●	●			●	●
C8NC	ø8 push-in fitting	Plug				●				●
CFNO	Plug	ø1.8 barbed fitting (compatible tube UP-9102-**)			●				●	
C18NO	Plug	ø1.8 push-in fitting (compatible tube UP-9402-**)			●				●	
C4NO	Plug	ø4 push-in fitting			●	●			●	●
C6NO	Plug	ø6 push-in fitting			●	●			●	●
C8NO	Plug	ø8 push-in fitting				●				●
CL18NC	Rad ø1.8 push-in fit upward (compat tube UP-9402-**)	Plug			●				●	
CL4NC	ø4 push-in L-fitting (upward)	Plug			●				●	
CL6NC	ø6 push-in L-fitting (upward)	Plug			●	●			●	●
CL8NC	ø8 push-in L-fitting (upward)	Plug				●				●
CL18NO	Plug	Rad ø1.8 push-in fit upward (compat tube UP-9402-**)			●				●	
CL4NO	Plug	ø4 push-in L-fitting (upward)			●				●	
CL6NO	Plug	ø6 push-in L-fitting (upward)			●	●			●	●
CL8NO	Plug	ø8 push-in L-fitting (upward)				●				●
CD18NC	Rad ø1.8 push-in fit downward (compat tube UP-9402-**)	Plug			●				●	
CD4NC	ø4 push-in L-fitting (downward)	Plug			●				●	
CD6NC	ø6 push-in L-fitting (downward)	Plug			●	●			●	●
CD8NC	ø8 push-in L-fitting (downward)	Plug				●				●
CD18NO	Plug	Rad ø1.8 push-in fit downward (compat tube UP-9402-**)			●				●	
CD4NO	Plug	ø4 push-in L-fitting (downward)			●				●	
CD6NO	Plug	ø6 push-in L-fitting (downward)			●	●			●	●
CD8NO	Plug	ø8 push-in L-fitting (downward)				●				●
Type	**Inch fitting/inch thread**									
C3N	ø1/8" push-in fitting		●		●		●		●	
C4N	ø5/32" push-in fitting		●		●		●		●	
C6N	ø1/4" push-in fitting			●		●		●		●
C8N	ø5/16" push-in fitting			●		●		●		●
CL3N	ø1/8" push-in L-fitting upward	(*8)	○		○		○		○	
CL4N	ø5/32" push-in L-fitting upward	(*8)	○		○		○		○	
CL6N	ø1/4" push-in L-fitting upward	(*8)		○		○		○		○
CL8N	ø5/16" push-in L-fitting upward	(*8)		○		○		○		○
CXN	Push-in fitting mix	(*7)	●	●	●	●				
Single side plug specifications	Port A	Port B								
C3NCN	ø1/8" push-in fitting	Plug			●				●	
C4NCN	ø5/32" push-in fitting	Plug			●				●	
C6NCN	ø1/4" push-in fitting	Plug				●				●
C8NCN	ø5/16" push-in fitting	Plug				●				●
C3NON	Plug	ø1/8" push-in fitting			●				●	
C4NON	Plug	ø5/32" push-in fitting			●				●	
C6NON	Plug	ø1/4" push-in fitting				●				●
C8NON	Plug	ø5/16" push-in fitting				●				●
CL3NCN	ø1/8" push-in L-fitting (upward)	Plug			○				○	
CL4NCN	ø5/32" push-in L-fitting (upward)	Plug			○				○	
CL6NCN	ø1/4" push-in L-fitting (upward)	Plug				○				○
CL8NCN	ø5/16" push-in L-fitting (upward)	Plug				○				○
CL3NON	Plug	ø1/8" push-in L-fitting (upward)			○				○	
CL4NON	Plug	ø5/32" push-in L-fitting (upward)			○				○	
CL6NON	Plug	ø1/4" push-in L-fitting (upward)				○				○
CL8NON	Plug	ø5/16" push-in L-fitting (upward)				○				○
00	Discrete valve for integrated base						●	●	●	●

is not available.

○ indicates made to order.

Precautions for model selection

*1 : Ports A and B plug specifications are available for 2-position single only.
Specify the port P/R bore size with the supply and exhaust block model No. on the manifold specifications sheet.
*2 : Ports A and B are the same size for push-in L-fitting mix (CX).
*3 : For a discrete solenoid valve, select 00 for Port size.
*4 : Select MN4GB*80R when mixing with 4, 5-port valves. Further, select MN3GB*80R when mixing with masking plate.
*5 : Not compatible with combination with external pilot (K). Dimensions are the same as those of the respective 2-position double solenoid.
*6 : Simultaneously select option "L" for types other than single solenoid.
*7 : The push-in fitting cannot be mixed with the discrete valve's 4(A) or 2(B) port.
*8 : Available only for single solenoids.

[Port size/wiring method list]

Code	Description		Ⓐ Model No. Manifold: Two 3-port valves integrated MN3GB1	MN3GB2	5-port valve MN4GB1	MN4GB2	Discrete valve block with solenoid valve/discrete solenoid valve (N)3GB1	(N)3GB2	(N)4GB1	(N)4GB2
Ⓓ Reduced wiring (lamp and surge suppressor provided as standard) 12/24 VDC										
T10	Common terminal block (M3 thread)	Left-sided specifications	●	●	●	●				
T10R		Right-sided specifications	●	●	●	●				
T11	Common terminal block (clamping)	Left-sided specifications	●	●	●	●				
T11R		Right-sided specifications	●	●	●	●				
T30	D-sub-connector	Left-sided specifications	●	●	●	●				
T30R		Right-sided specifications	●	●	●	●				
T50	20-pin flat cable connector (with power supply terminal)	Left-sided specifications	●	●	●	●				
T50R		Right-sided specifications	●	●	●	●				
T51	20-pin flat cable connector (without power supply terminal)	Left-sided specifications	●	●	●	●				
T51R		Right-sided specifications	●	●	●	●				
T52	10-pin flat cable connector (without power supply terminal)	Left-sided specifications	●	●	●	●				
T52R		Right-sided specifications	●	●	●	●				
T53	26-pin flat cable connector (without power supply terminal)	Left-sided specifications	●	●	●	●				
T53R		Right-sided specifications	●	●	●	●				
Ⓓ Serial transmission (lamp/surge suppressor provided as standard) 24 VDC										
T6G1	CC-Link	NPN 16 points	●	●	●	●				
T7D1	DeviceNet	NPN 16 points	●	●	●	●				
T7G1	CC-Link	NPN 16 points	●	●	●	●				
T7L1	SAVE NET	NPN 16 points	●	●	●	●				
T7S1	CompoNet	NPN 16 points	●	●	●	●				
T7SP1		PNP 16 points	●	●	●	●				
T8G1	CC-Link	NPN 16 points	●	●	●	●				
T8G2		NPN 32 points	●	●	●	●				
T8GP1		PNP 16 points	●	●	●	●				
T8GP2		PNP 32 points	●	●	●	●				
T8P1	PROFIBUS-DP	NPN 16 points	●	●	●	●				
T8P2		NPN 32 points	●	●	●	●				
T8PP1		PNP 16 points	●	●	●	●				
T8PP2		PNP 32 points	●	●	●	●				
T8EC1	EtherCAT	NPN 16 points	●	●	●	●				
T8EC2		NPN 32 points	●	●	●	●				
T8ECP1		PNP 16 points	●	●	●	●				
T8ECP2		PNP 32 points	●	●	●	●				
T8EN1	EtherNet/IP	NPN 16 points	●	●	●	●				
T8EN2		NPN 32 points	●	●	●	●				
T8ENP1		PNP 16 points	●	●	●	●				
T8ENP2		PNP 32 points	●	●	●	●				
T8D1	DeviceNet	NPN 16 points	●	●	●	●				
T8D2		NPN 32 points	●	●	●	●				
T8DP1		PNP 16 points	●	●	●	●				
T8DP2		PNP 32 points	●	●	●	●				
T8EB1	CC-Link IEF Basic	NPN 16 points	●	●	●	●				
T8EB2		NPN 32 points	●	●	●	●				
T8EBP1		PNP 16 points	●	●	●	●				
T8EBP2		PNP 32 points	●	●	●	●				
T8EP1	PROFINET	NPN 16 points	●	●	●	●				
T8EP2		NPN 32 points	●	●	●	●				
T8EPP1		PNP 16 points	●	●	●	●				
T8EPP2		PNP 32 points	●	●	●	●				
A2N	Without lead wire (without socket)	with surge suppressor and indicator lamp					●	●	●	●
Ⓔ Terminal/connector pin array										
Blank	Standard wiring	(*9))	●	●	●	●	●	●	●	●
W	Double wiring	(*9))	●	●	●	●	●	●	●	●
W1	Double wiring (with single spare wiring)	(*9))(*10)	●	●	●	●	●	●	●	●
Ⓕ Option										
Blank	Manual override of non-locking/locking common		●	●	●	●	●	●	●	●
M	Manual override of non-locking		●	●	●	●	●	●	●	●
H	With exhaust check valve	(*11)	●	●	●	●	●	●	●	●
K	External pilot	(*12)			●	●			●	●
A	Ozone/coolant proof		●	●	●	●	●	●	●	●
S	Surgeless	(*13)	●	●	●	●	●	●	●	●
E	Low exoergic/energy saving circuit	(*13)(*14)	●	●	●	●	●	●	●	●
L	With pipe adaptor		●	●	●	●	●	●	●	●
Q	Reduced wiring duct	(*18)	●	●	●	●	●	●	●	●
F	Port A/B filter built in	(*15)	●	●	●	●	●	●	●	●
G1	With sensor (1-port detection type)	(*19)(*20)			●	●				
G2	With sensor (2-port detection type)	(*20)	●	●	●	●				
Z1	Air supply spacer	(*16)	●	●	●	●				
Z2	In-stop valve spacer	(*16)(*17)	●	●	●	●				
Z3	Exhaust spacer	(*16)	●	●	●	●				
Z6	Spacer pilot check valve	(*16)				●				
Ⓖ Station No.										
1 to 24	1 stations to 24 stations (Max. station number for MN4GB2 is 20.)		●	●	●	●				
Ⓗ Voltage										
3	24 VDC		●	●	●	●	●	●	●	●
4	12 VDC		●	●	●	●	●	●	●	●

Ozone-proof specifications • Coolant proof specifications

Can be selected with "How to order" Item Ⓕ option "A" above.

Clean-room specifications

● Clean room compatible specifications

** - Voltage - **P7***

Specifications for rechargeable battery (Catalog No. CC-1226A)

● For use in the rechargeable battery manufacturing process, parts materials used for air path and sliding section are limited

** - Voltage - **P4**

CE marking specifications

** - Voltage - **ST**

・Standard voltage of 24 VDC or less is CE marking-compatible even if the model No. is not indicated with "ST".

⚠ Precautions for model selection

*9 : Blank: The wiring will be based on the type of valve used.
W*: All wired for double solenoid valves regardless of the type of valve used.

*10: Spare wiring (A type socket assembly) is included on the cap side for single types. A holder for retaining the socket assembly is included for single unit valves (A2N). For details, refer to page 416. Not compatible with combination with port size C*NC or C*NO.

*11: 3-position all ports closed and PAB connection are not provided with the exhaust check valve specifications (H). Refer to page 628 for details on the exhaust check valve.

*12: Consult with CKD when using vacuum with external pilot (K).

*13: In addition, surgeless "S" and low exoergic/energy saving circuit "E" cannot be selected together.

*14: Surgeless specifications.

*15: A filter is built into port P as standard.

*16: Specify the spacer mounting position and quantity on the manifold specifications sheet. Stacking of spacers is not possible. Combination with the masking plate is not supported. Cannot be selected together with push-in L-fitting (upward). For details, refer to page 410 to page 414.

*17: Not compatible in combination with external pilot (K).

*18: When radial upward push-in fittings are selected, only 2-position single is supported.

*19: Single and double only.

*20: The pressure range is 0 to 0.7 MPa.

Manifold configuration explanation and parts list

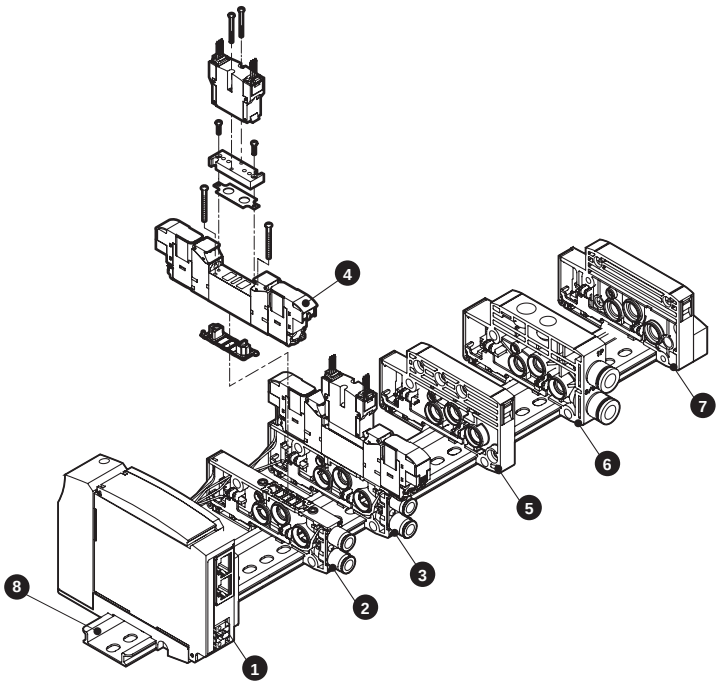

List of main components (refer to pages 400 to 417 for details)

No.	Component name	Model No. (example)	No.	Component name	Model No. (example)
1	Wiring block (Note)	N4G1R-T8P1	5	Partition block	N4G1R-S
2	Discrete valve block	N4GB1R-V2-C6	6	Supply and exhaust block	N4G1R-Q-8
3	Discrete valve block with solenoid valve	N4GB120R-C6-A2NH-3	7	End block R	N4G1R-ER
4	Solenoid valve body	4GB129R-00-A2NH-3	8	DIN rail	N4GR-BAA (length)

(Note) Wiring block cannot be ordered as a single item.

Reduced wiring weight

4GB1

(g)

Part name	Model No.	Weight	Part name	Model No.	Weight	Part name	Model No.	Weight
Valve block with solenoid valve	N4GB110R-C6-A2N-3	69	End block	N4G1R-E*	60	Wiring block (Note)	N4G1R-T10(R)	207
	N4GB120R-C6-A2N-3	88		N4G1R-EX*	60		N4G1R-T30(R)	165
	N4GB1[2/4]0R-C6-A2N-3	89	Partition block	N4G1R-S	45		N4G1R-T50(R)	167
	N3GB1660R-C6-A2N-3	88	Valve block	N4GB1R-V1-C*	33		N4G1R-T6*	295
Valve block with masking plate	N4GB1R-MP * -C6	37		N4GB1R-V2-C*	35		N4G1R-T7*	203
Supply and exhaust block	N4G1R-Q-8	58	DIN rail	N4GR-BAA*	0.19/mm		N4G1R-T8*	229
	N4G1R-QK-8	60						

(Note) Wiring block cannot be ordered as a single item.

4GB2

(g)

Part name	Model No.	Weight	Part name	Model No.	Weight	Part name	Model No.	Weight
Valve block with solenoid valve	N4GB210R-C8-A2N-3	130	End block	N4G2R-E*	84	Wiring block (Note)	N4G2R-T10(R)	223
	N4GB220R-C8-A2N-3	149		N4G2R-EX*	85		N4G2R-T30(R)	182
	N4GB2[2/4]0R-C8-A2N-3	160	Partition block	N4G2R-S	60		N4G2R-T50(R)	184
	N4GB2660R-C8-A2N-3	149	Valve block	N4GB2R-V1-C*	55		N4G2R-T6*	312
Valve block with masking plate	N4GB2R-MP * -C8	69		N4GB2R-V2-C*	57		N4G2R-T7*	204
Supply and exhaust block	N4G2R-Q-10	83	DIN rail	N4GR-BAA*	0.19/mm		N4G2R-T8*	242
	N4G2R-QK-10	85						

(Note) Wiring block cannot be ordered as a single item.

Parts list

Compatible product(s)	Part name	Model No.
Valve 4G1	ø1.8 barbed	4G1R-JOINT-CF
	ø1.8 straight	4G1R-JOINT-C18
	ø4 straight	4G1R-JOINT-C4
	ø6 straight	4G1R-JOINT-C6
	ø1.8 elbow	4G1R-JOINT-CL18, CLL18
	ø4 elbow	4G1R-JOINT-CL4, CLL4
	ø6 elbow	4G1R-JOINT-CL6, CLL6
	ø1/8" straight	4G1R-JOINT-C3N
	ø5/32" straight	4G1R-JOINT-C4N
	ø1/8" elbow *1	4G1R-JOINT-CL3N
	ø5/32" elbow *1	4G1R-JOINT-CL4N
	Plug cartridge	4G1R-JOINT-CPG
Valve 4G2	ø4 straight	4G2R-JOINT-C4
	ø6 straight	4G2R-JOINT-C6
	ø8 straight	4G2R-JOINT-C8
	ø6 elbow	4G2R-JOINT-CL6, CLL6
	ø8 elbow	4G2R-JOINT-CL8, CLL8

Compatible product(s)	Part name	Model No.
Valve 4G2	ø1/4" straight	4G2R-JOINT-C6N
	ø5/16" straight	4G2R-JOINT-C8N
	ø1/4" elbow *1	4G2R-JOINT-CL6N
	ø5/16" elbow *1	4G2R-JOINT-CL8N
	Plug cartridge	4G2R-JOINT-CPG
Common	Coil assembly	4GR-A2N-[*2]-COIL-[*3] *2: Ozone/coolant proof (blank, A) Surgeless (S) Low exoergic/energy saving circuit (E) External pilot (K) *3: Voltage (1, 3, 4)
Manifold	Expansion socket assembly (Details on page 837)	a side for solenoid N4GR-SOCKET-ASSY-[selection No.] b side for solenoid N4GR-RELAY-SOCKET-[selection No.]

*1: Available as made to order.

Dimensions

MN4GB1

Note: The two 3-port valve integrated type has the same dimensions as the double model.

● Common terminal block (M3 thread) left side (T10)

Note: Clamping specification (T11) is also available.
Dimensions are the same as T10.

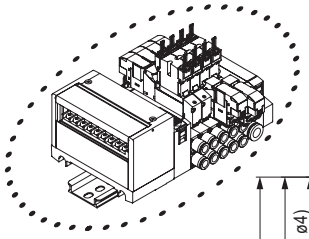

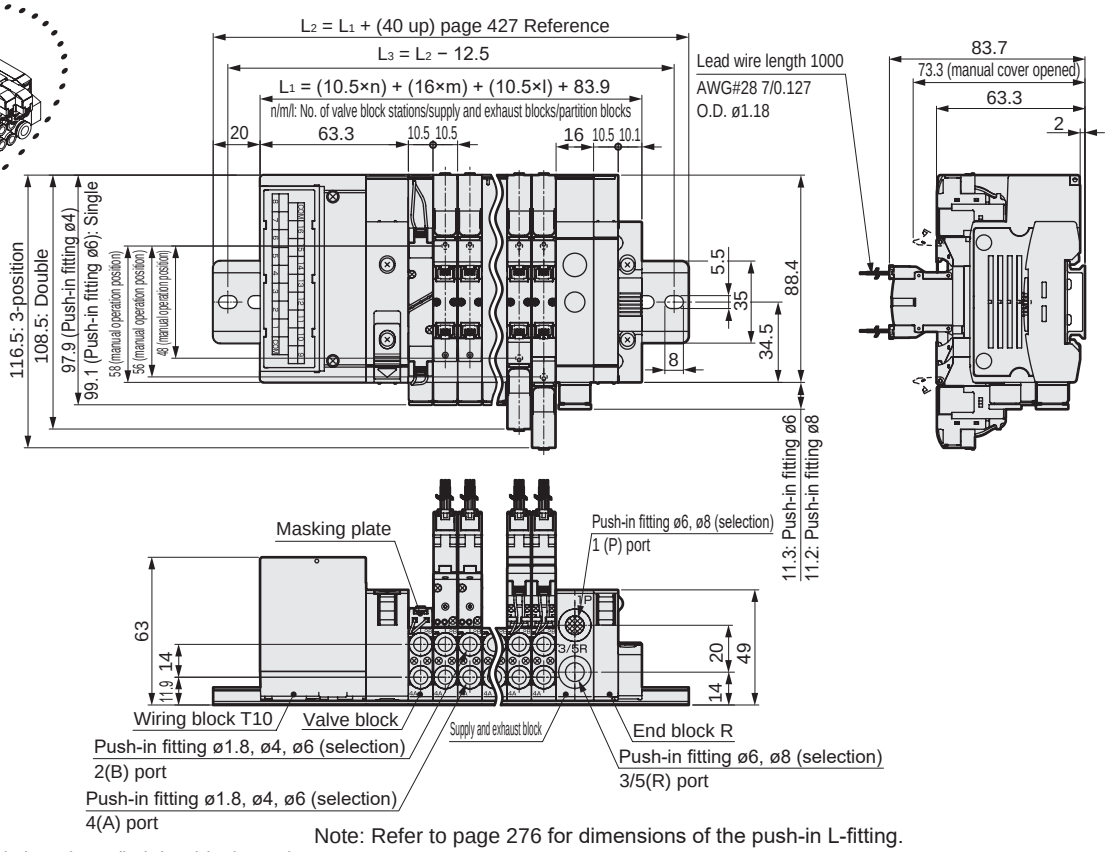

Note: Refer to page 276 for dimensions of the push-in L-fitting.

● Common terminal block (M3 thread) right side (T10R)

Note: Clamping specification (T11R) is also available.
Dimensions are the same as T10R.

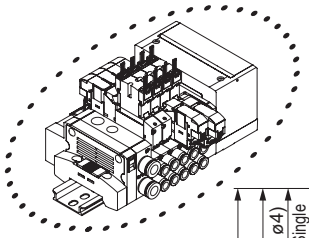

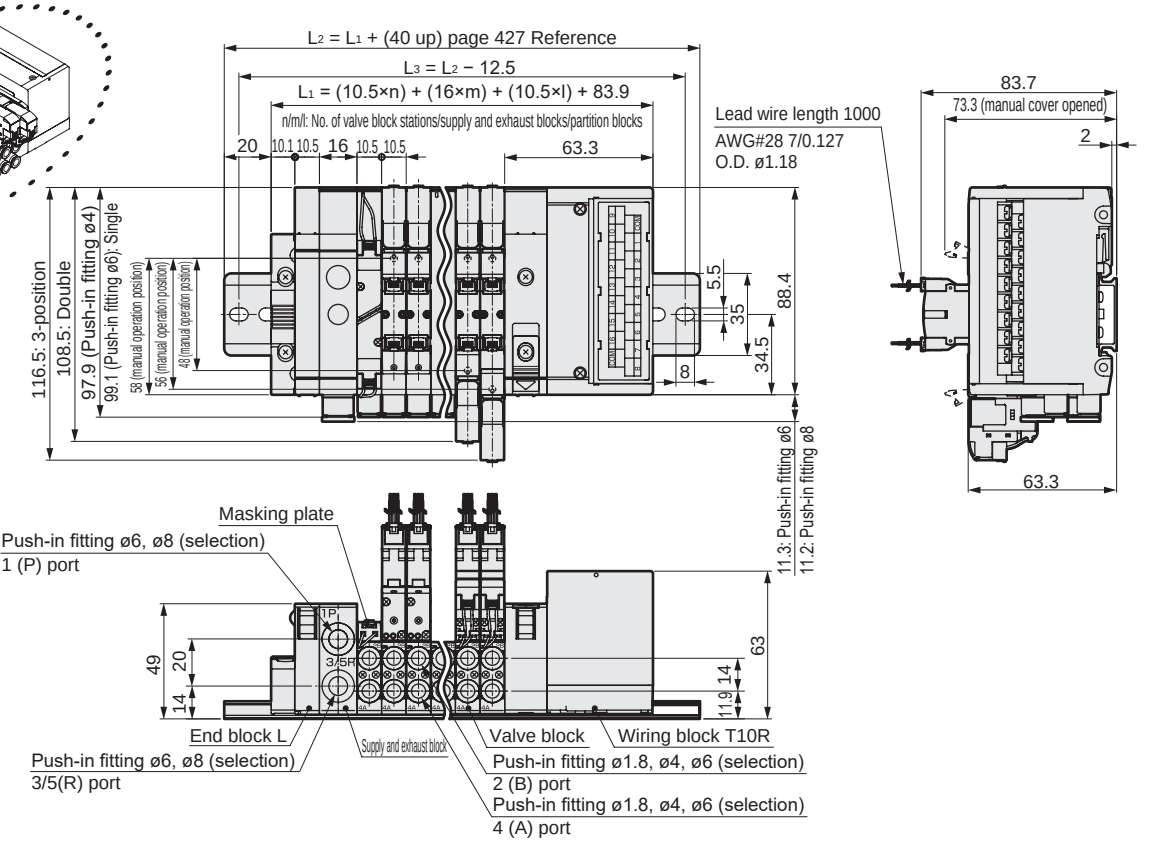

Dimensions

MN4GB2

Note: The two 3-port valve integrated type has the same dimensions as the double model.

● Common terminal block (M3 thread) left side (T10)

Note: Clamping specification (T11) is also available.
Dimensions are the same as T10.

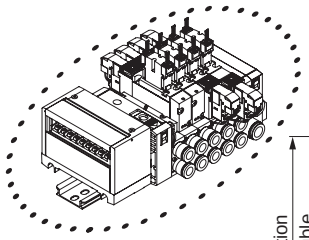

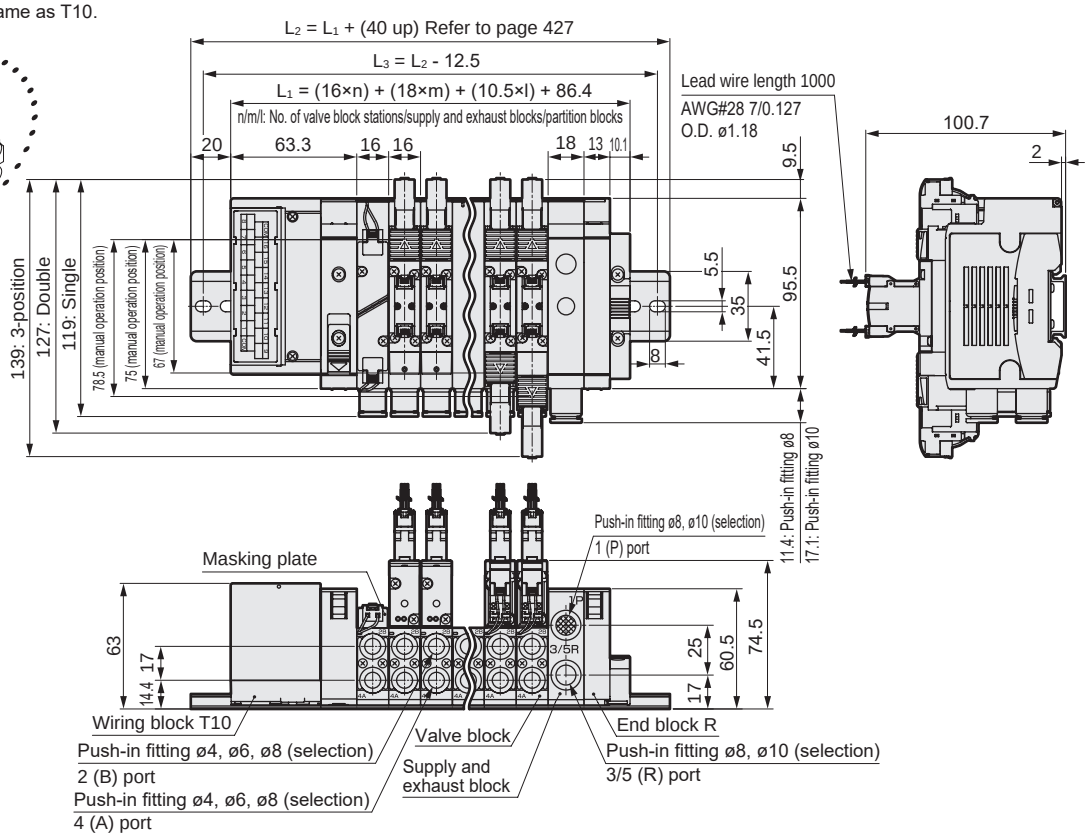

● Common terminal block (M3 thread) right side (T10R)

Note: Clamping specification (T11R) is also available.
Dimensions are the same as T10R.

Note: Refer to page 278 for dimensions of the push-in L fitting.

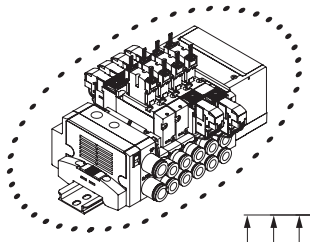

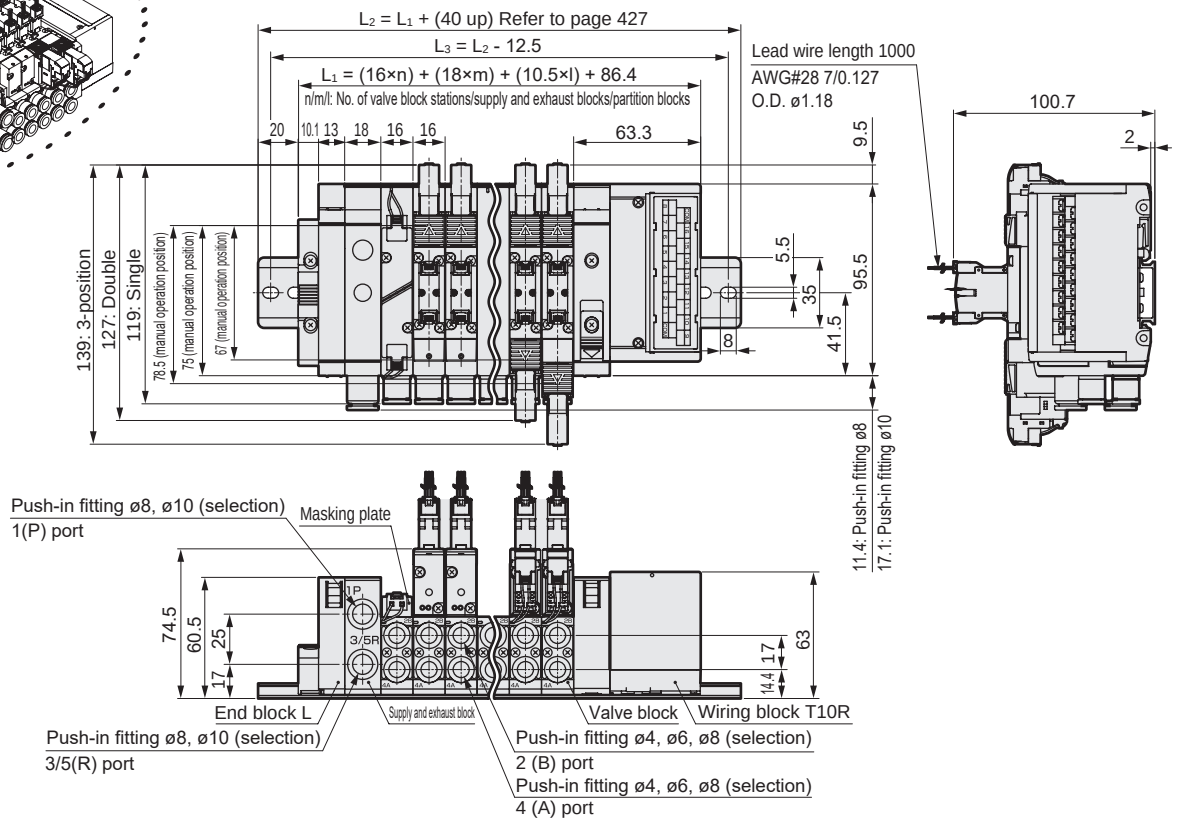

Dimensions

MN4GB1

Note: The two 3-port valve integrated type has the same dimensions as the double model.

● Serial transmission (T6G1)

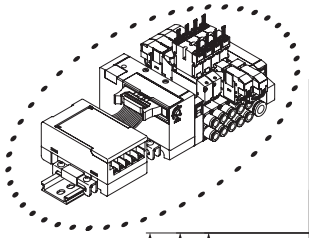

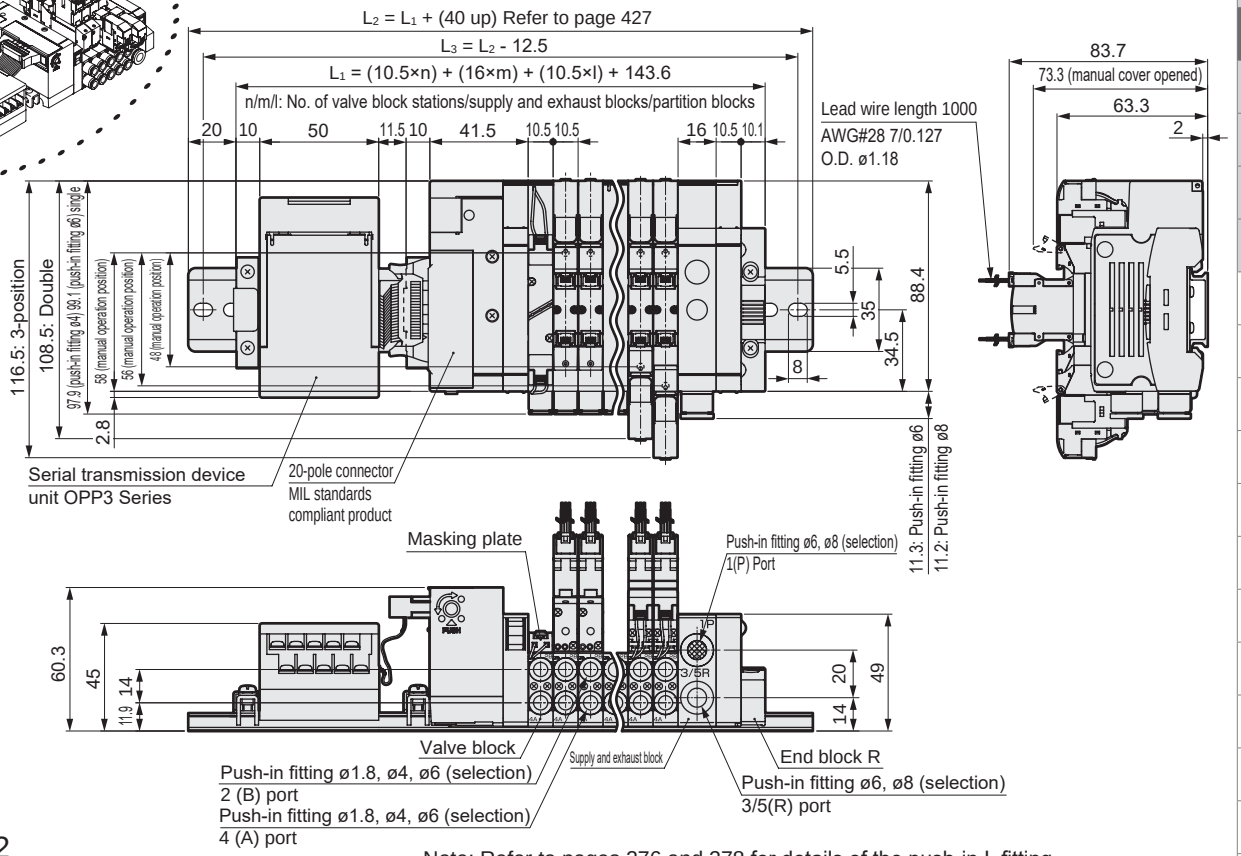

MN4GB2

● Serial transmission (T6G1)

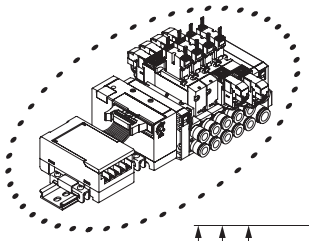

Note: Refer to pages 276 and 278 for details of the push-in L fitting.

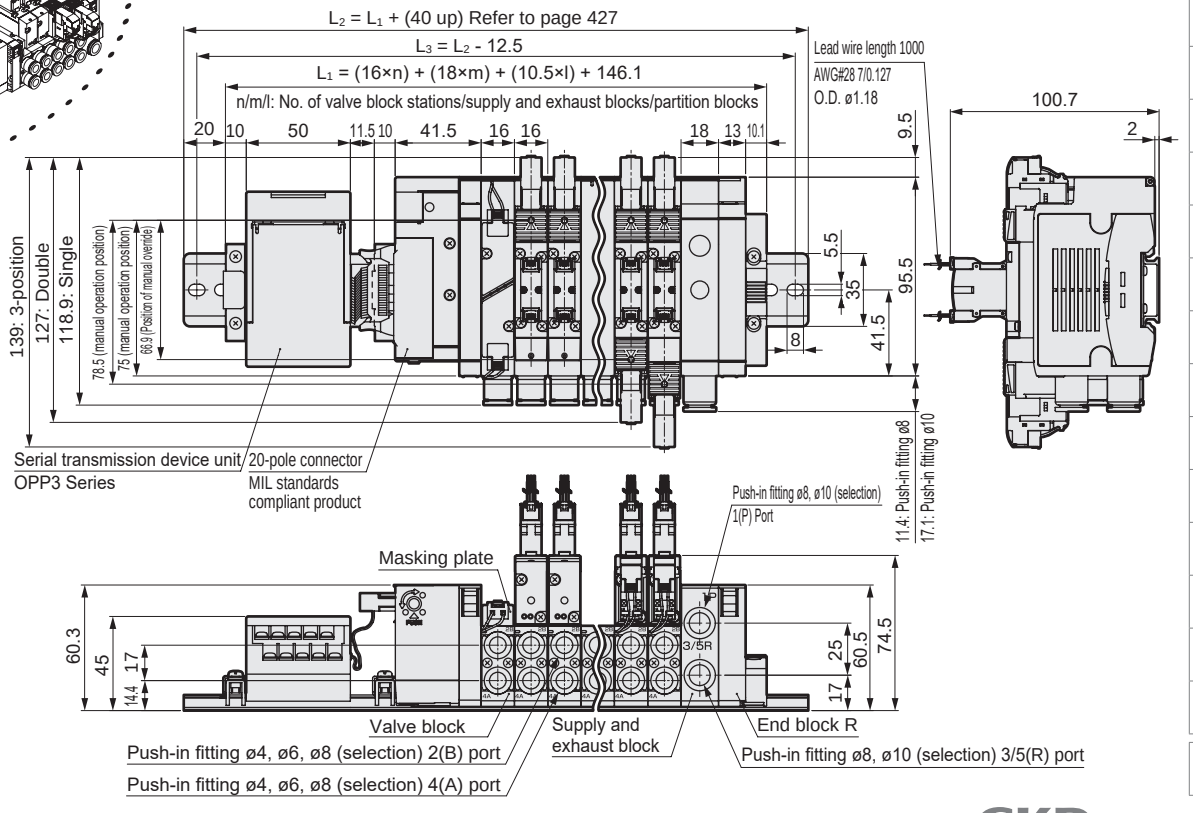

Dimensions

MN4GB1

Note: The two 3-port valve integrated type has the same dimensions as the double model.

● Thin serial transmission (T8*)

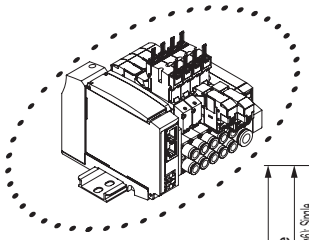

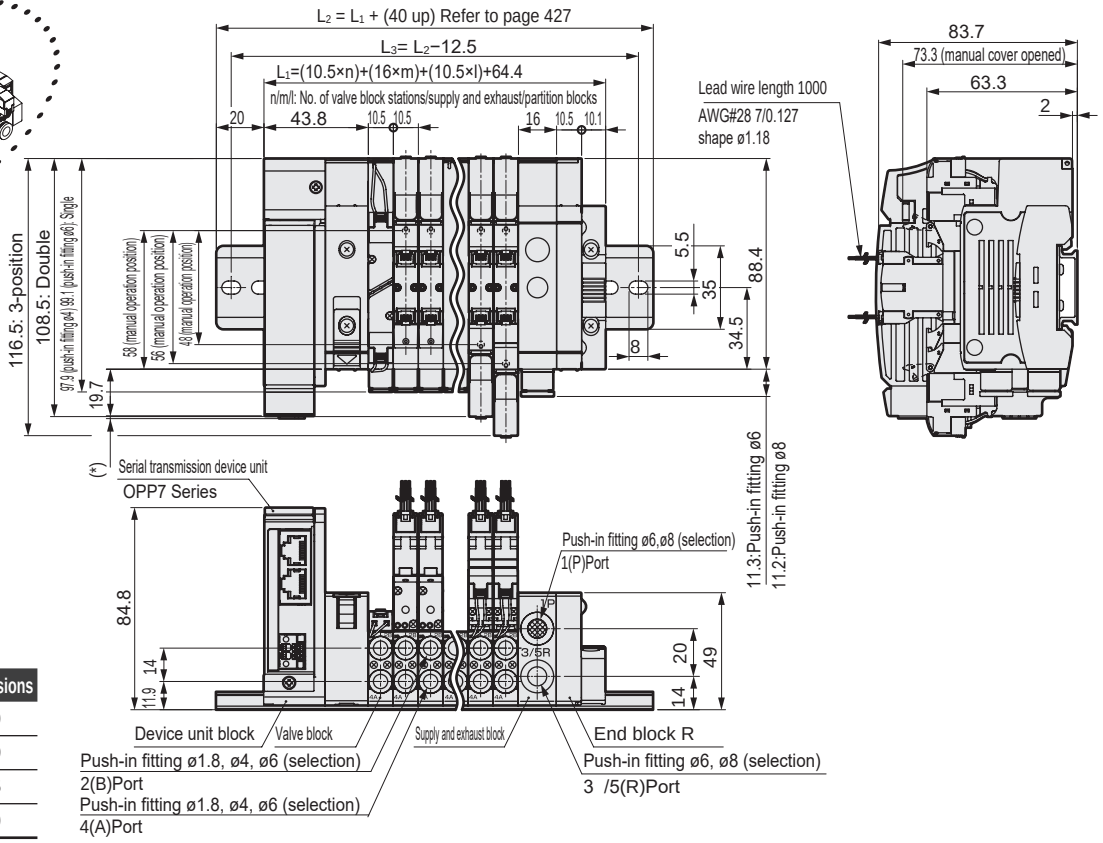

Serial transmission	* Dimensions
T8G□	1.0
T8P□	4.9
T8E□	1.5
T8D□	1.0

MN4GB2

Note: Refer to pages 276 and 278 for details of the push-in L fitting.

● Thin serial transmission (T8*)

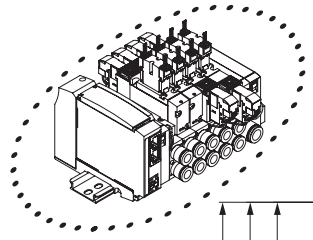

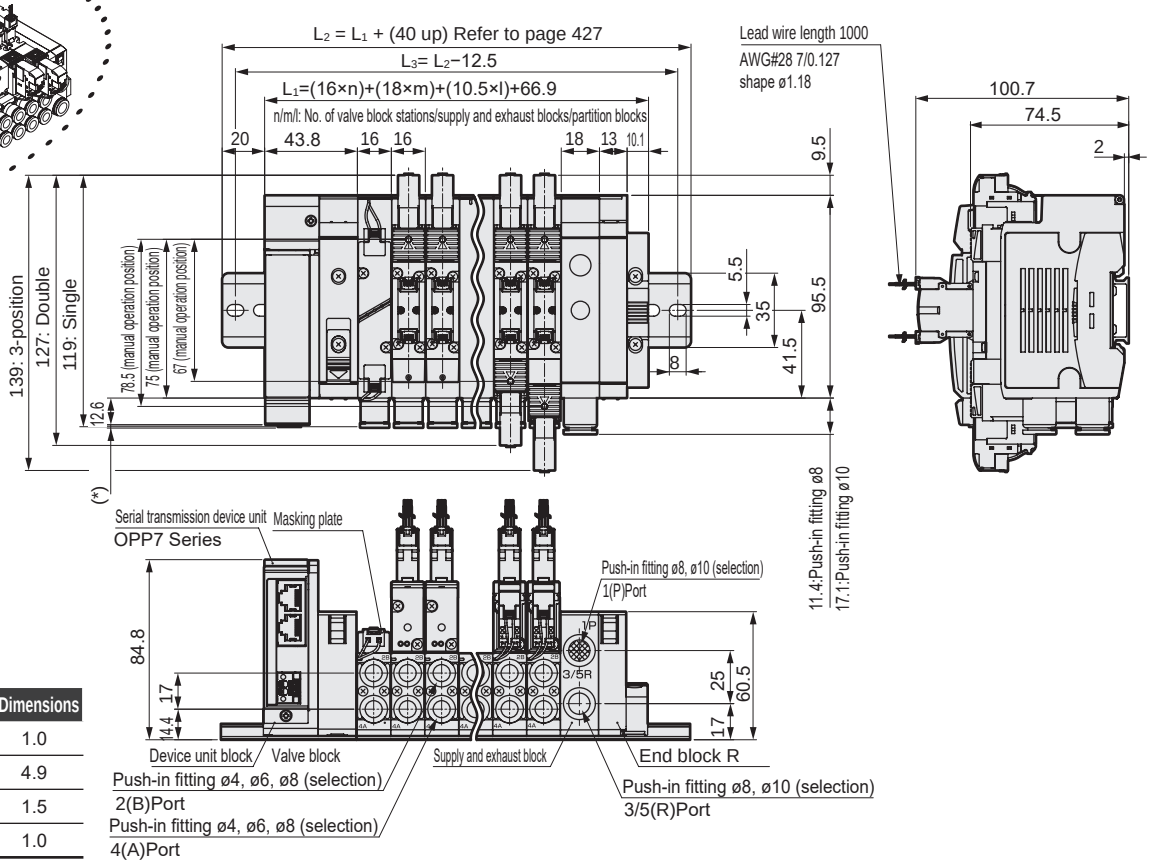

Serial transmission	* Dimensions
T8G □	1.0
T8P □	4.9
T8E □	1.5
T8D □	1.0

MEMO

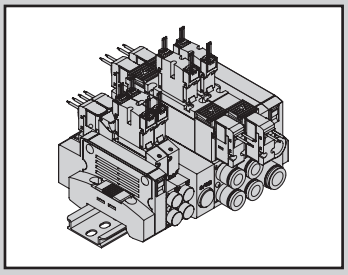

4G1/2 mix manifold

MN4GBX12 Series

● Cylinder bore size: ø20 to ø80

RoHS CAD

Specifications

Common with all series.

For individual wiring, refer to page 380, and for reduced wiring, refer to page 386.

How to order

MN3GBX12R- ☐ - ☐ ☐ - ☐ - ☐

MN4GBX12R- ☐ - ☐ ☐ - ☐ - ☐

Ⓐ Model No. Ⓑ Port size Ⓒ Electrical connections (Reduced wiring connection) Ⓓ Terminal/connector pin array Ⓔ Option Ⓕ Station No. Ⓖ Voltage

* The model No. will be "MN□GBX12R-". Other items are common with the example of model No. for each series.
For individual wiring, refer to page 382, and for reduced wiring, refer to page 390.

Manifold configuration explanation and parts list

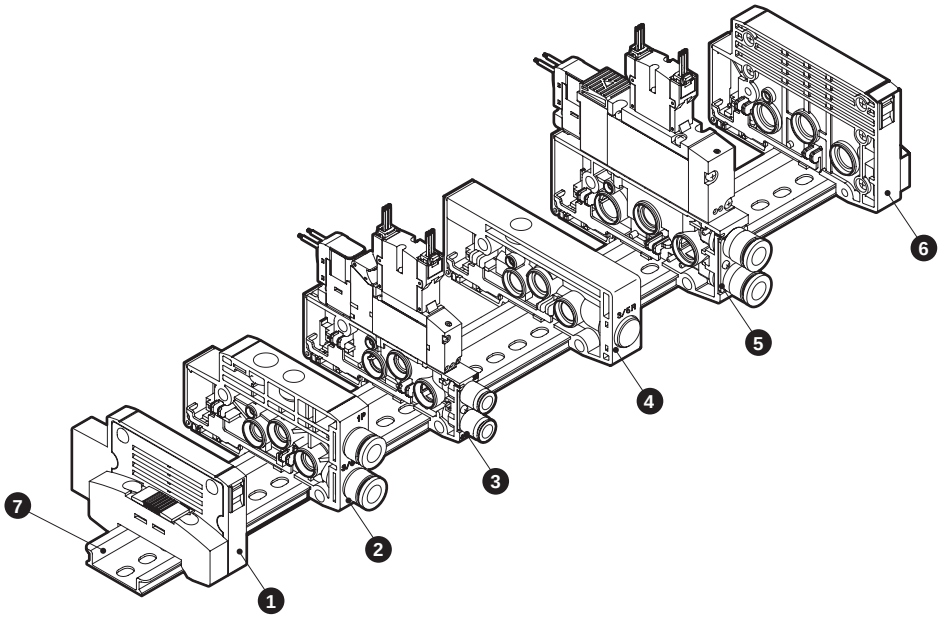

* Notes on 4G1/2 mix manifolds
With the fitting at the front, the left side of the mixed block is the 4G1 Series and the right side the 4G2 Series.
(Note that these position settings cannot be reversed.)

List of main components (refer to pages 400 to 417 for details)

Part No.	Configuration parts name	Model No. (example)
1	End block L	N4G1R-EL
2	Supply and exhaust block	N4G1R-Q-8
3	Discrete valve block with solenoid valve	N4GB110R-C6-H-3
4	Mixed block	N4G12R-MIX
5	Discrete valve block with solenoid valve	N4GB210R-C8-H-3
6	End block R	N4G2R-ER
7	DIN rail	N4GR-BAA (length)

Weight

N4G12R-MIX:49g Refer to the specifications of each series for other components.

Mixed block: Dimensions

Unit mm

MN4GBX12R

Note: For details of the E-connector, EJ-connector, and DIN terminal box, refer to page 243.
Note: Refer to pages 276 to 279 for details of the push-in L fitting.

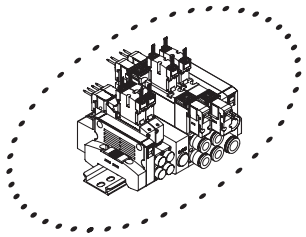

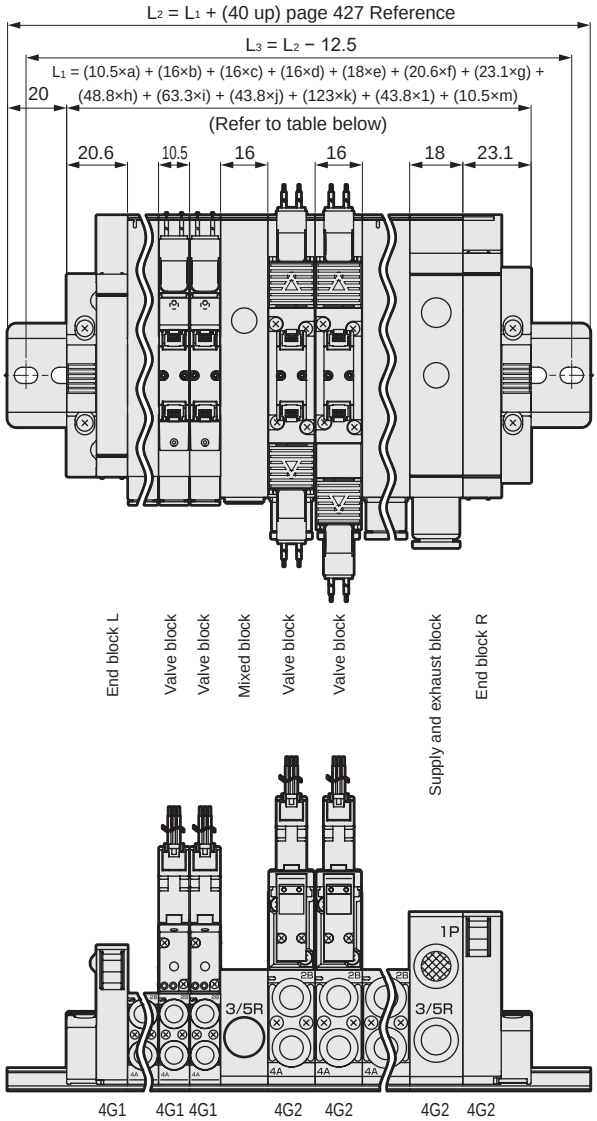

This diagram is one example of the many free combinations available for the mix manifold.
With the dimensions listed below, configure combinations with reference to the previous page.

Part name	Dimensions
a : 4G1 No. of valve blocks	10.5 × a
b : 4G2 No. of valve blocks	16 × b
c : No. of mix blocks	16 × c
d : 4G1 No. of supply and exhaust blocks	16 × d
e : 4G2 No. of supply and exhaust blocks	18 × e
f : 4G1 No. of L end blocks	20.6 × f
g : 4G2 No. of R end blocks	23.1 × g
h : 4G1/2 No. of reduced wiring T30/T5*	48.8 × h
i : 4G1/2 No. of reduced wiring T10/T11*	63.3 × i
j : 4G1/2 No. of reduced wiring T7*	43.8 × j
k : 4G1/2 No. of reduced wiring T6G1*	123 × k
l : 4G1/2 No. of reduced wiring T8*	43.8 × l
m : 4G1/2 No. of partition blocks	10.5 × m

*1: The mixed block must be placed between 4G1 and 4G2.
*2: The max. station No. is 20.

Block manifold: Block configuration

As units can be freely assembled, it is easy to change the number of stations, perform maintenance, etc.

● Valve block with solenoid valve

(1) The types of solenoid valve required can be arranged on a DIN rail at the number of stations required.
However, the number of stations depends on the wiring method. (Refer to page 386.)
(2) Solenoid valves are numbered 1, 2, 3... from the left with the fitting in front.

● Supply and exhaust block

(1) At the connecting part of each block, a number of blocks can be freely connected.
(2) Select internal or external pilot according to the solenoid valve.

● End block

(1) Install on both sides for individual wiring specifications.
(2) Install only on wiring block opposite side for reduced wiring specifications.

● Partition block

(1) Install in combination with supply and exhaust blocks for multi-pressure specifications.

● Mixed block

(1) Install when combining 4G1 and 4G2 as a mix on the same DIN rail.
This will have the effect of reduced piping.
*Note 4G1 on the left side of the mixed block and 4G2 on the right side.

Block manifold configuration

Piping

Piping block

Ⓐ Discrete valve block with solenoid valve
- For base piping individual wiring

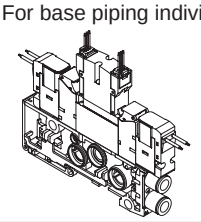

- For base piping reduced wiring

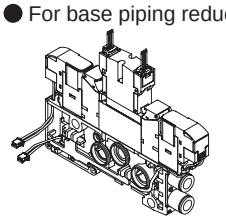

Ⓑ Discrete valve block with masking plate
- For base piping

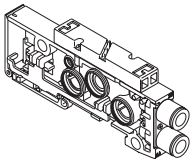

Ⓒ Discrete valve block
- For base piping

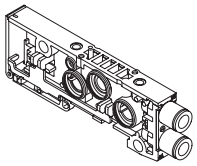

Ⓓ Supply and exhaust block
- For internal pilot

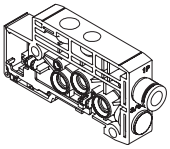

- For external pilot

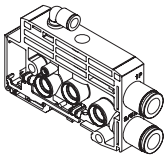

Ⓔ End block
- For left

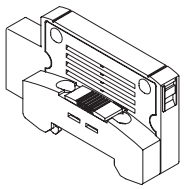

- For right

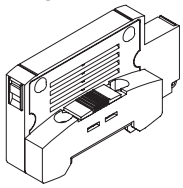

Ⓕ Partition block

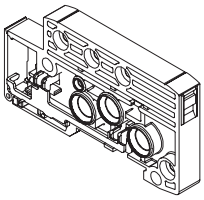

Ⓖ Mixed block

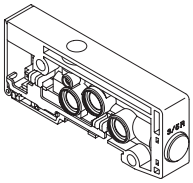

Wiring

Wiring block

Ⓗ Common terminal block
- M3

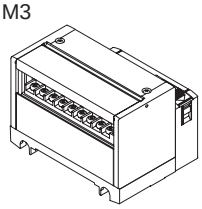

- Clamping method

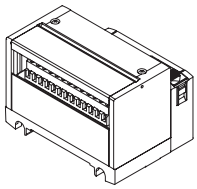

Ⓘ D-sub-connector block

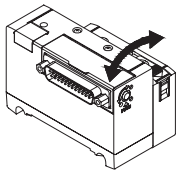

Ⓙ Flat cable connector block

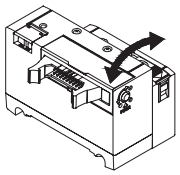

Ⓚ Serial transmission block
- Connector type

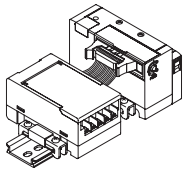

- Thin slot type

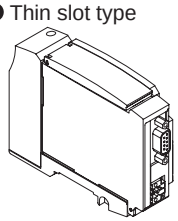

Related products

Related products

Ⓛ Related products
- Mounting rail

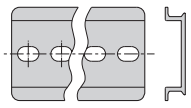

- Blanking plug

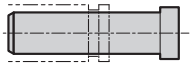

- Air supply spacer



- Spacer pilot check valve

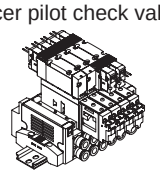

- Silencer

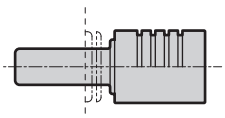

- In-stop valve spacer

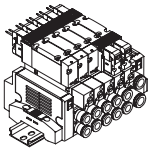

- Pilot check valve

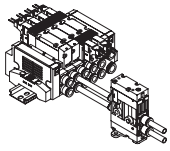

Piping

A. Discrete valve block with solenoid valve

Block assembled from solenoid valve body and valve block (split resin base). Refer to pages 382 and 390 for the selection guide.

B. Discrete valve block with masking plate

Block assembled from masking plate and valve block (split resin base).

N4GB1 R - MPD - C4 - 3 F

Ⓐ Model No. Ⓑ Type Ⓒ Bore size Ⓓ Cable length *2 Ⓔ Option

Ⓑ Type

MP	For individual wiring
MPS	For reduced wiring single
MPD	For reduced wiring double/3-position

Ⓓ Cable length *3

Blank	For individual wiring
2 to 10	Select the length from page 404.

Ⓔ Option

Blank	No option
L	With piping adapter
F	Port A/B filter built in

*2: A socket assembly is included with purchases for reduced wiring station expansion, so select "2 to 10". Select the cable length from page 404 and fill in the Ⓓ cable length field. If ordering with the manifold specifications sheet, the cable length can be omitted.

Code	Description	Port A	Port B	Ⓐ Model No. N4GB1	Ⓐ Model No. N4GB2
Ⓒ Port size (for base piping, this must be configured.)					
Type	Metric fitting/Rc thread				
CF	ø1.8 barbed fitting (compatible tube UP-9102-**)			●	
C18	ø1.8 push-in fitting (compatible tube UP-9402-**)			●	
C4	ø4 push-in fitting			●	●
C6	ø6 push-in fitting			●	●
C8	ø8 push-in fitting				●
CL18	ø1.8 push-in L-fitting upward (compatible tube UP-9402-**)			●	
CL4	ø4 push-in L-fitting (upward)			●	
CL6	ø6 push-in L-fitting (upward)			●	●
CL8	ø8 push-in L-fitting (upward)				●
CD18	ø1.8 push-in L-fitting downward (compatible tube UP-9402-**)			●	
CD4	ø4 push-in L-fitting (downward)			●	
CD6	ø6 push-in L-fitting (downward)			●	●
CD8	ø8 push-in L-fitting (downward)				●
Single side plug spec		Port A	Port B		
CFNC	ø1.8 barbed fitting (compatible tube UP-9102-**)		Plug	●	
C18NC	ø1.8 push-in fitting (compatible tube UP-9402-**)		Plug	●	
C4NC	ø4 push-in fitting		Plug	●	●
C6NC	ø6 push-in fitting		Plug	●	●
C8NC	ø8 push-in fitting		Plug		●
CFNO		Plug	ø1.8 barbed fitting (compatible tube UP-9102-**)	●	
C18NO		Plug	ø1.8 push-in fitting (compatible tube UP-9402-**)	●	
C4NO		Plug	ø4 push-in fitting	●	●
C6NO		Plug	ø6 push-in fitting	●	●
C8NO		Plug	ø8 push-in fitting		●
CL18NC	ø1.8 push-in L-fitting upward (compatible tube UP-9402-**)		Plug	●	
CL4NC	ø4 push-in L-fitting (upward)		Plug	●	●
CL6NC	ø6 push-in L-fitting (upward)		Plug	●	●
CL8NC	ø8 push-in L-fitting (upward)		Plug		●
CL18NO		Plug	ø1.8 push-in L-fitting upward (compatible tube UP-9402-**)	●	
CL4NO		Plug	ø4 push-in L-fitting (upward)	●	
CL6NO		Plug	ø6 push-in L-fitting (upward)	●	●
CL8NO		Plug	ø8 push-in L-fitting (upward)		●

Code	Description		Ⓐ Model No. N4GB1	Ⓐ Model No. N4GB2
Type	Metric fitting/Rc thread			
Single side plug spec	Port A	Port B		
CD18NC	ø1.8 push-in L-fitting downward (compatible tube UP-9402-**)	Plug	●	
CD4NC	ø4 push-in L-fitting (downward)	Plug	●	
CD6NC	ø6 push-in L-fitting (downward)	Plug	●	●
CD8NC	ø8 push-in L-fitting (downward)	Plug		●
CD18NO		ø1.8 push-in L-fitting downward (compatible tube UP-9402-**)	●	
CD4NO	Plug	ø4 push-in L-fitting (downward)	●	
CD6NO	Plug	ø6 push-in L-fitting (downward)	●	●
CD8NO	Plug	ø8 push-in L-fitting (downward)		●
Type	Inch fitting/inch thread			
C3N	ø1/8" push-in fitting		●	
C4N	ø5/32" push-in fitting		●	
C6N	ø1/4" push-in fitting			●
C8N	ø5/16" push-in fitting			●
CL3N	ø1/8" push-in L-fitting upward *1		○	
CL4N	ø5/32" push-in L-fitting upward *1		○	
CL6N	ø1/4" push-in L-fitting upward *1			○
CL8N	ø5/16" push-in L-fitting upward *1			○
Single side plug spec	Port A	Port B		
C3NCN	ø1/8" push-in fitting	Plug	●	
C4NCN	ø5/32" push-in fitting	Plug	●	
C6NCN	ø1/4" push-in fitting	Plug		●
C8NCN	ø5/16" push-in fitting	Plug		●
C3NON	Plug	ø1/8" push-in fitting	●	
C4NON	Plug	ø5/32" push-in fitting	●	
C6NON	Plug	ø1/4" push-in fitting		●
C8NON	Plug	ø5/16" push-in fitting		●
CL3NCN	ø1/8" push-in L-fitting upward *1	Plug	○	
CL4NCN	ø5/32" push-in L-fitting upward *1	Plug	○	
CL6NCN	ø1/4" push-in L-fitting upward *1	Plug		○
CL8NCN	ø5/16" push-in L-fitting upward *1	Plug		○
CL3NON	Plug	ø1/8" push-in L-fitting upward *1	○	
CL4NON	Plug	ø5/32" push-in L-fitting upward *1	○	
CL6NON	Plug	ø1/4" push-in L-fitting upward *1		○
CL8NON	Plug	ø5/16" push-in L-fitting upward *1		○

*1: Available as made to order.

is not available.
○ indicates made to order.

N4GB1R-MPD-C4-3

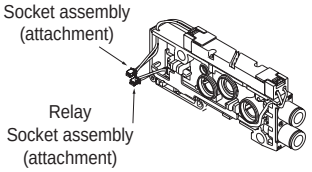

N4GB1R-MPD-C4-3L

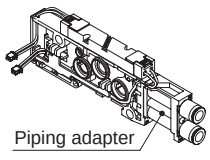

N4GB1R-MPD-CL4-3L

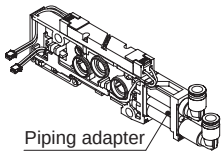

N4GB2R-MPD-C6-5

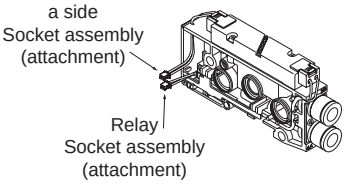

B-1. Masking plate

4G1R - MP

Ⓐ Model No.

4G1R-MP

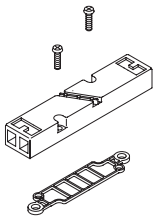

4G2R-MP

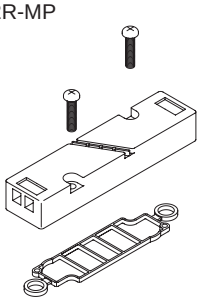

Piping

C. Discrete valve block (separate item only)

Discrete valve block (split resin base).

N4GB1 R - V2 - C4 - 3 F

Ⓐ Model No. Ⓑ Type Ⓒ Bore size Ⓓ Cable length *2 Ⓔ Option

Ⓑ Type

V1	For individual wiring For reduced wiring single
V2	For reduced wiring double/3-position

Ⓓ Cable length *3

Blank	For individual wiring
2 to 10	Select the length from page 404.

*2: A socket assembly is included with purchases for reduced wiring station expansion, so select "2 to 10". Select the cable length from page 404 and fill in the Ⓓ cable length field. If ordering with the manifold specifications sheet, the cable length can be omitted.

Code	Description	Ⓐ Model No. N4GB1	Ⓐ Model No. N4GB2
Ⓒ Port size (for base piping, this must be configured.)			
Type	Metric fitting/Rc thread		
CF	ø1.8 barbed fitting (compatible tube UP-9102-**)	●	
C18	ø1.8 push-in fitting (compatible tube UP-9402-**)	●	
C4	ø4 push-in fitting	●	●
C6	ø6 push-in fitting	●	●
C8	ø8 push-in fitting		●
CL18	ø1.8 push-in L-fitting upward (compatible tube UP-9402-**)	●	
CL4	ø4 push-in L-fitting (upward)	●	
CL6	ø6 push-in L-fitting (upward)	●	●
CL8	ø8 push-in L-fitting (upward)		●
CD18	ø1.8 push-in L-fitting downward (compatible tube UP-9402-**)	●	
CD4	ø4 push-in L-fitting (downward)	●	
CD6	ø6 push-in L-fitting (downward)	●	●
CD8	ø8 push-in L-fitting (downward)		●
Single side plug spec	Port A	Port B	
CFNC	ø1.8 barbed fitting (compatible tube UP-9102-**)	Plug	●
C18NC	ø1.8 push-in fitting (compatible tube UP-9402-**)	Plug	●
C4NC	ø4 push-in fitting	Plug	● ●
C6NC	ø6 push-in fitting	Plug	● ●
C8NC	ø8 push-in fitting	Plug	●
CFNO	Plug	ø1.8 barbed fitting (compatible tube UP-9102-**)	●
C18NO	Plug	ø1.8 push-in fitting (compatible tube UP-9402-**)	●
C4NO	Plug	ø4 push-in fitting	● ●
C6NO	Plug	ø6 push-in fitting	● ●
C8NO	Plug	ø8 push-in fitting	●
CL18NC	ø1.8 push-in L-fitting upward (compatible tube UP-9402-**)	Plug	●
CL4NC	ø4 push-in L-fitting (upward)	Plug	● ●
CL6NC	ø6 push-in L-fitting (upward)	Plug	● ●
CL8NC	ø8 push-in L-fitting (upward)	Plug	●
CL18NO	Plug	ø1.8 push-in L-fitting upward (compatible tube UP-9402-**)	●
CL4NO	Plug	ø4 push-in L-fitting (upward)	●
CL6NO	Plug	ø6 push-in L-fitting (upward)	● ●
CL8NO	Plug	ø8 push-in L-fitting (upward)	●

Code	Description	Ⓐ Model No. N4GB1	Ⓐ Model No. N4GB2
Type	Metric fitting/Rc thread		
Single side plug spec	Port A	Port B	
CD18NC	ø1.8 push-in L-fitting downward (compatible tube UP-9402-**)	Plug	●
CD4NC	ø4 push-in L-fitting (downward)	Plug	●
CD6NC	ø6 push-in L-fitting (downward)	Plug	● ●
CD8NC	ø8 push-in L-fitting (downward)	Plug	●
CD18NO	Plug	ø1.8 push-in L-fitting downward (compatible tube UP-9402-**)	●
CD4NO	Plug	ø4 push-in L-fitting (downward)	●
CD6NO	Plug	ø6 push-in L-fitting (downward)	● ●
CD8NO	Plug	ø8 push-in L-fitting (downward)	●
Type	Inch fitting/inch thread		
C3N	ø1/8" push-in fitting		●
C4N	ø5/32" push-in fitting		●
C6N	ø1/4" push-in fitting		●
C8N	ø5/16" push-in fitting		●
CL3N	ø1/8" push-in L-fitting upward *1		○
CL4N	ø5/32" push-in L-fitting upward *1		○
CL6N	ø1/4" push-in L-fitting upward *1		○
CL8N	ø5/16" push-in L-fitting upward *1		○
Single side plug spec	Port A	Port B	
C3NCN	ø1/8" push-in fitting	Plug	●
C4NCN	ø5/32" push-in fitting	Plug	●
C6NCN	ø1/4" push-in fitting	Plug	●
C8NCN	ø5/16" push-in fitting	Plug	●
C3NON	Plug	ø1/8" push-in fitting	●
C4NON	Plug	ø5/32" push-in fitting	●
C6NON	Plug	ø1/4" push-in fitting	●
C8NON	Plug	ø5/16" push-in fitting	●
CL3NCN	ø1/8" push-in L-fitting upward *1	Plug	○
CL4NCN	ø5/32" push-in L-fitting upward *1	Plug	○
CL6NCN	ø1/4" push-in L-fitting upward *1	Plug	○
CL8NCN	ø5/16" push-in L-fitting upward *1	Plug	○
CL3NON	Plug	ø1/8" push-in L-fitting upward *1	○
CL4NON	Plug	ø5/32" push-in L-fitting upward *1	○
CL6NON	Plug	ø1/4" push-in L-fitting upward *1	○
CL8NON	Plug	ø5/16" push-in L-fitting upward *1	○

Ⓔ Option

Blank	No option	●	●
L	With piping adapter	●	●
F	Port A/B filter built in	●	●
Z6	For spacer pilot check valve mounting		●

*1: Available as made to order.

is not available.
○ indicates made to order.

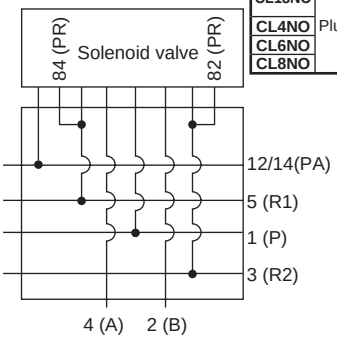

Discrete valve block circuit diagram

N4GB1R-V2-C4

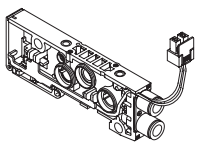

N4GB2R-V2-C6

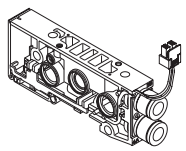

Option L piping adapter

When using radial upward push-in fittings with double or 3-position types, select L (with piping adapter).
In addition, combining axial push-in fittings with piping adapters may cause the fitting to protrude past the socket assembly, making tube attachment and removal easier.

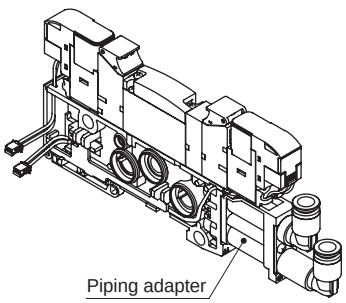

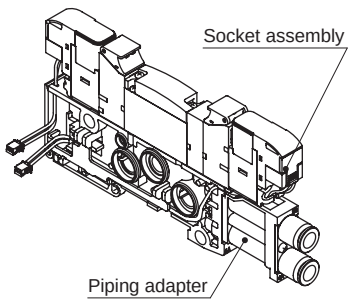

Piping

As problems may occur depending on the configuration, make selections with a sufficient understanding of the features of each block.

C. Discrete valve block (separate item only)

Valve block for expansion Cable length

Calculate the distance W between the expansion position and the wiring block (Fig. 1), and select an appropriate cable length from [Table 1].
Note that the required socket assembly will differ between the a side solenoid and the b side solenoid.
While Fig. 1 shows the wiring block with left side specifications, similarly calculate the distance W between the expansion position and the wiring block for the right side specifications.

Calculation of W

· For MN4G1

W = (10.5×n) + (16×m) + (10.5×l)

· For MN4G2

W = (16×n) + (18×m) + (10.5×l)

n/m/l: No. of valve blocks/supply and exhaust blocks/partition blocks

· For MN4GX

Calculate W using the mix block width of 16.

[Table 1] W length - selection No. compatibility table

Selection No.	Type of wiring		
	T10/11 (R)	T30/5*/6* (R)	T7*/T8*
2		0	25 or less
3	20 or less	Over 0 to 30	Over 25 to 55
4	Over 20 to 70	Over 30 to 80	Over 55 to 105
5	Over 70 to 120	Over 80 to 130	Over 105 to 155
6	Over 120 to 170	Over 130 to 180	Over 155 to 205
7	Over 170 to 260	Over 180 to 270	Over 205 to 295
8	Over 260 to 350	Over 270 to 360	Over 295 to 385
9	Over 350 to 450	Over 360 to 460	Over 385 to 485
10	Over 450 to 570	Over 460 to 580	Over 485 to 605

Fig. 1

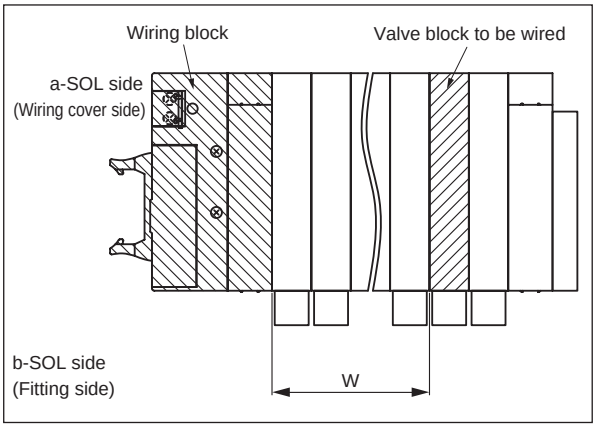

D. Supply and exhaust block

The supply and exhaust block can be installed at any position adjacent to the valve block.
As there is no set number of units, install two or more units when necessary for combinations with partition blocks or in order to increase the flow rate for supply and exhaust.
In order to prevent foreign matter from entering, port P is equipped with a filter.

N4G1 R - Q - 8 X

Model No. A Type B Bore size C Exhaust

A Type		B Bore size	
Q	Internal pilot	6	ø6 push-in fitting
QK	External pilot	6L	ø6 push-in fitting upward
		6D	ø6 push-in fitting down
		8	ø8 push-in fitting
		8L	ø8 push-in fitting upward
		8D	ø8 push-in fitting downward
		6N	ø1/4" push-in fitting
		6LN	ø1/4" push-in fitting upward *1
		6DN	ø1/4" push-in fitting downward *1
		8N	ø5/16" push-in fitting
		8LN	ø5/16" push-in fitting upward *1
		8DN	ø5/16" push-in fitting downward *1

B Bore size	
6M *2	Port P ø1/4" push-in fitting Port R ø6 push-in fitting
6LM *1, *2	Port P ø1/4" push-in fitting upward Port R ø6 push-in fitting upward
6DM *1, *2	Port P ø1/4" push-in fitting downward Port R ø6 push-in fitting downward
8M *2	Port P ø5/16" push-in fitting Port R ø8 push-in fitting *2
8LM *1, *2	Port P ø5/16" push-in fitting upward Port R ø8 push-in fitting upward
8DM *1, *2	Port P ø5/16" push-in fitting downward Port R ø8 push-in fitting downward

C Exhaust	
Blank	Common exhaust
X *3	Atmospheric release

*1: Available as made to order.
*2: Select 6*M or 8*M when using a silencer with inch fitting specification types.
*3: For X, select atmospheric release (EX) for the end block.

N4G2 R - QK - 10L X

Model No. A Type B Bore size C Exhaust

A Type		B Bore size	
Q	Internal pilot	8	ø8 push-in fitting
QK	External pilot	8L	ø8 push-in fitting upward
		8D	ø8 push-in fitting down
		10	ø10 push-in fitting
		10L	ø10 push-in fitting upward
		10D	ø10 push-in fitting down
		8N	ø5/16" push-in fitting
		8LN	ø5/16" push-in fitting upward *1
		8DN	ø5/16" push-in fitting downward *1
		10N	ø3/8" push-in fitting
		10LN	ø3/8" push-in fitting upward *1
		10DN	ø3/8" push-in fitting downward *1

B Bore size	
8M *2	Port P ø5/16" push-in fitting Port R ø8 push-in fitting
8LM *1, *2	Port P ø5/16" push-in fitting upward Port R ø8 push-in fitting upward
8DM *1, *2	Port P ø5/16" push-in fitting downward Port R ø8 push-in fitting downward
10M *2	Port P ø3/8" push-in fitting Port R ø10 push-in fitting
10LM *1, *2	Port P ø3/8" push-in fitting upward Port R ø10 push-in fitting upward
10DM *1, *2	Port P ø3/8" push-in fitting downward Port R ø10 push-in fitting downward

C Exhaust	
Blank	Common exhaust
X *3	Atmospheric release

*1: Available as made to order.
*2: Select 6*M or 8*M when using a silencer with inch fitting specification types.
*3: For X, select atmospheric release (EX) for the end block.

N4G1R-Q-8

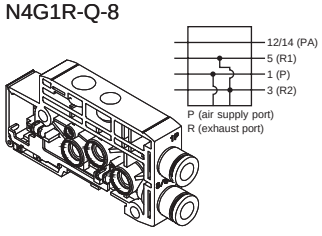

N4G1R-Q-8X

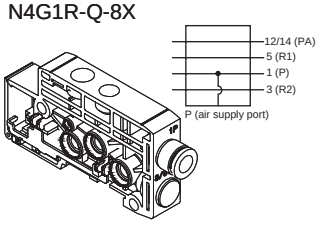

N4G2R-Q-10L

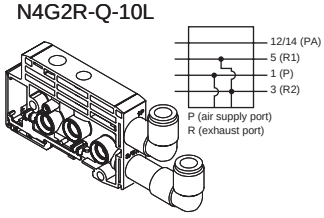

N4G2R-Q-10X

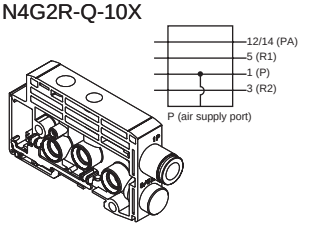

N4G1R-QK-8

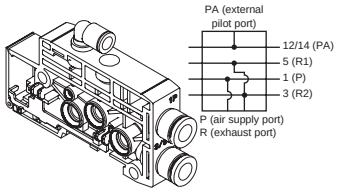

N4G1R-QK-8LX

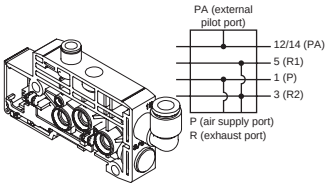

N4G2R-QK-10

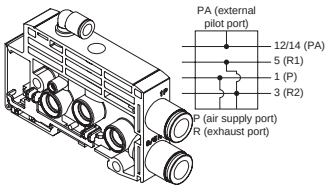

N4G2R-QK-10X

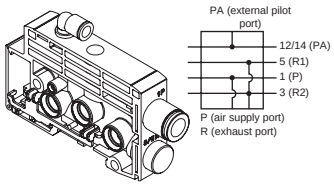

* External pilot port: ø6 push-in fitting

* External pilot port: ø6 push-in fitting

Piping

E. End block

Install on both ends of the manifold for individual wiring. Install on opposite sides of the wiring block for reduced wiring.
An exhaust muffler is built into the atmosphere release type.

N4G1R - E R

Model No. Ⓐ Type Ⓑ Installation position

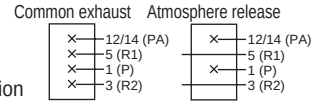

Ⓐ Type		Ⓑ Installation position	
E	Common exhaust	L	For left side
EX	Atmospheric release	R	For right side

N4G2R - EX L

Model No. Ⓐ Type Ⓑ Installation position

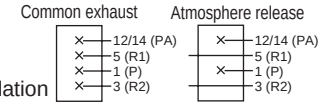

Ⓐ Type		Ⓑ Installation position	
E	Common exhaust	L	For left side
EX	Atmospheric release	R	For right side

N4G1R-EL

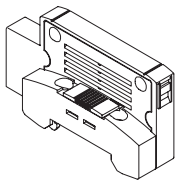

N4G1R-ER

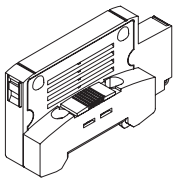

N4G2R-EL

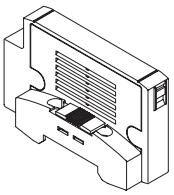

N4G2R-ER

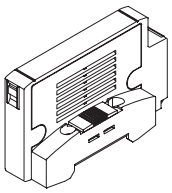

F. Partition block

Multi-pressure mixing and measures for back pressure increase prevention can be achieved by combining partition blocks and supply and exhaust blocks.

N4G1R - S

Model No. Ⓐ Type

Ⓐ Type	
SA	P/R/PA blocked
S	P/R blocked PA through
SP	P blocked R/PA through
SE	R blocked P/PA through

N4G1R-S

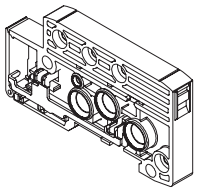

N4G2R - SA

Model No. Ⓐ Type

Ⓐ Type	
SA	P/R/PA blocked
S	P/R blocked PA through
SP	P blocked R/PA through
SE	R blocked P/PA through

N4G2R-S

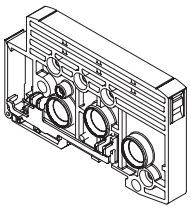

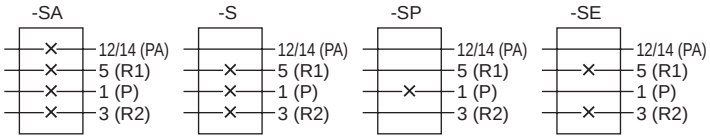

G. Mixed block

Install when 4G1 and 4G2 will be mixed within the same manifold.
Installation positions are 4G1 on the left side of the mixed block and 4G2 on the right side.

N4G12R - MIX

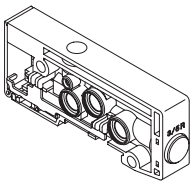

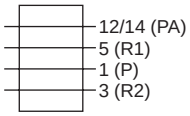

Wiring

Wiring block cannot be ordered as a single item.
* "Wiring block" is the overall term for H. common terminal blocks, I. D-sub-connector blocks, J. flat cable connector blocks, and K. serial transmission blocks.

H. Common terminal block

M3 thread specifications

N4G1R-T10

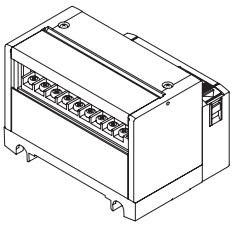

N4G1R-T10R

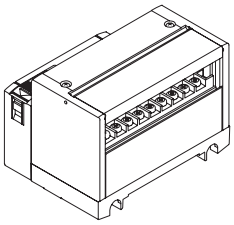

M3 thread specifications

N4G2R-T10

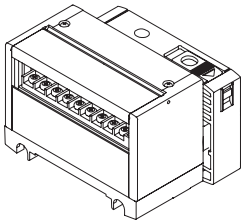

N4G2R-T10R

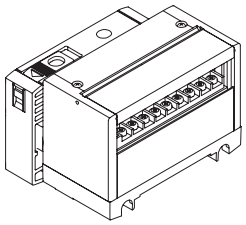

Clamping specification

N4G1R-T11

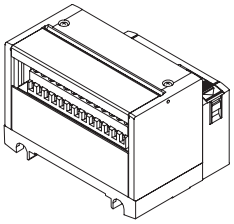

N4G1R-T11R

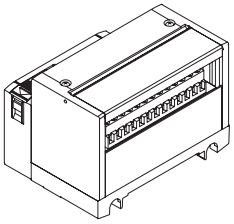

Clamping specification

N4G2R-T11

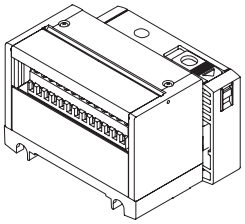

N4G2R-T11R

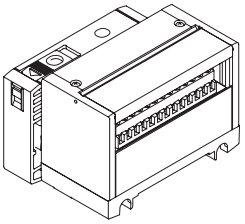

I. D-sub-connector block

N4G1R-T30

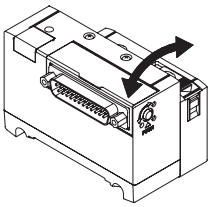

N4G1R-T30R

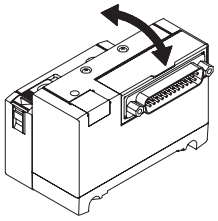

N4G2R-T30

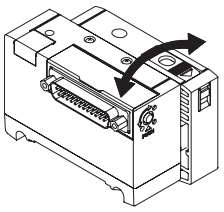

N4G2R-T30R

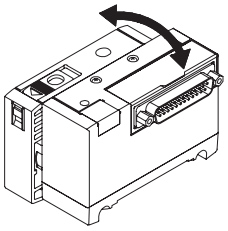

* For the cable with D-sub-connector model No., refer to page 819.

J. Flat cable connector block

● With power supply terminal

N4G1R-T50

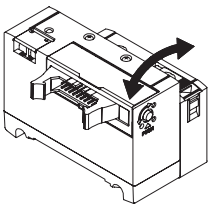

N4G1R-T50R

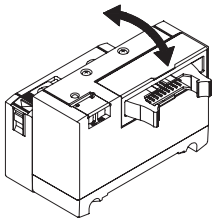

● With power supply terminal

N4G2R-T50

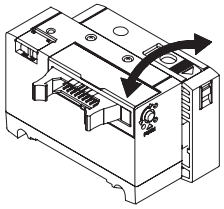

N4G2R-T50R

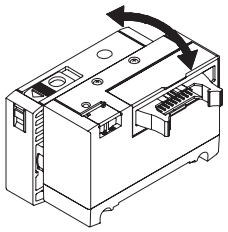

● Without power supply terminal

N4G1R-T51 (N4G1R-T52) (N4G1R-T53)

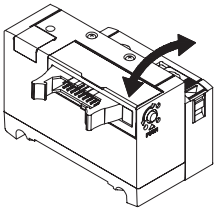

N4G1R-T51R (N4G1R-T52R) (N4G1R-T53R)

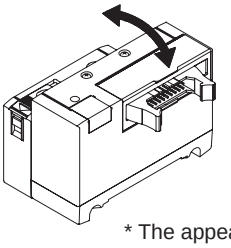

● Without power supply terminal

N4G2R-T51 (N4G2R-T52) (N4G2R-T53)

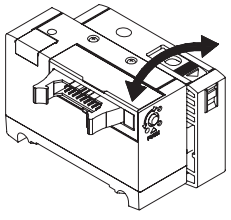

N4G2R-T51R (N4G2R-T52R) (N4G2R-T53R)

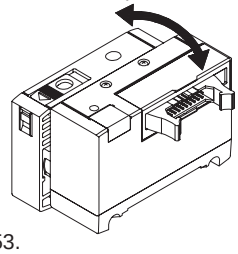

* The appearance of the connector unit varies with T52 and T53.

Wiring (Wiring block) * Wiring block cannot be ordered as a separate item.

K. Serial transmission block

● Connector type

N4G1R - T6G1

Model No. Ⓐ Type

Ⓐ Type			
T6G1	CC-Link	NPN	16 points

N4G1R-T6*

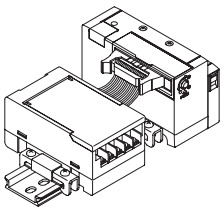

N4G2R - T6G1

Model No. Ⓐ Type

Ⓐ Type			
T6G1	CC-Link	NPN	16 points

N4G2R-T6*

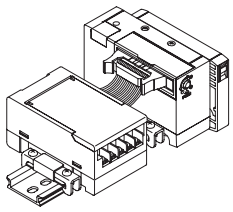

● Slim slot

N4G1R - T7D1

Model No. Ⓐ Type

Ⓐ Type			
T7D1	DeviceNet	NPN	16 points
T7G1	CC-Link		16 points
T7L1	SAVE NET		16 points
T7S1	CompoNet	NPN	16 points
T7SP1		PNP	

N4G1R-T7*

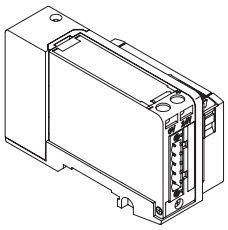

N4G2R - T7G1

Model No. Ⓐ Type

Ⓐ Type			
T7D1	DeviceNet	NPN	16 points
T7G1	CC-Link		16 points
T7L1	SAVE NET		16 points
T7S1	CompoNet	NPN	16 points
T7SP1		PNP	

N4G2R-T7*

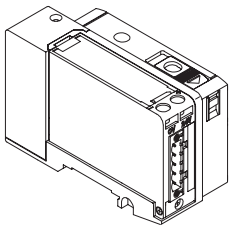

● Slim slot

N4G1R - T8G1

Ⓐ Wiring method

Ⓐ Wiring method			
T8G1	CC-Link	NPN	16 points
T8G2			32 points
T8GP1		PNP	16 points
T8GP2			32 points
T8P1	PROFIBUS-DP	NPN	16 points
T8P2			32 points
T8PP1		PNP	16 points
T8PP2			32 points
T8EC1	EtherCAT	NPN	16 points
T8EC2			32 points
T8ECP1		PNP	16 points
T8ECP2			32 points
T8EN1	EtherNet/IP	NPN	16 points
T8EN2			32 points
T8ENP1		PNP	16 points
T8ENP2			32 points
T8D1	DeviceNet	NPN	16 points
T8D2			32 points
T8DP1		PNP	16 points
T8DP2			32 points
T8EB1	CC-Link IEF Basic	NPN	16 points
T8EB2			32 points
T8EBP1		PNP	16 points
T8EBP2			32 points
T8EP1	PROFINET	NPN	16 points
T8EP2			32 points
T8EPP1		PNP	16 points
T8EPP2			32 points

N4G1R-T8*

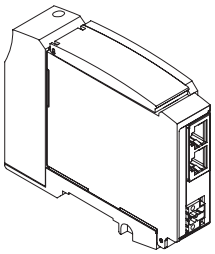

N4G2R - T8G1

Ⓐ Wiring method

Ⓐ Wiring method			
T8G1	CC-Link	NPN	16 points
T8G2			32 points
T8GP1		PNP	16 points
T8GP2			32 points
T8P1	PROFIBUS-DP	NPN	16 points
T8P2			32 points
T8PP1		PNP	16 points
T8PP2			32 points
T8EC1	EtherCAT	NPN	16 points
T8EC2			32 points
T8ECP1		PNP	16 points
T8ECP2			32 points
T8EN1	EtherNet/IP	NPN	16 points
T8EN2			32 points
T8ENP1		PNP	16 points
T8ENP2			32 points
T8D1	DeviceNet	NPN	16 points
T8D2			32 points
T8DP1		PNP	16 points
T8DP2			32 points
T8EB1	CC-Link IEF Basic	NPN	16 points
T8EB2			32 points
T8EBP1		PNP	16 points
T8EBP2			32 points
T8EP1	PROFINET	NPN	16 points
T8EP2			32 points
T8EPP1		PNP	16 points
T8EPP2			32 points

N4G2R-T8*

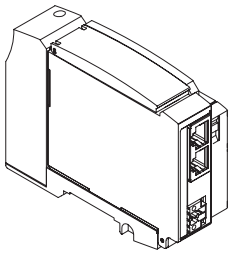

L. Serial transmission device unit * The serial transmission device unit may be ordered as a separate item.

● Single unit serial transmission device (adapter) station (connector connection)

4GR - OPP3 - 1G

Ⓐ Wiring method

Code	Description			
Ⓐ Wiring method				
1G	T6G1	CC-LINK	NPN	16 points

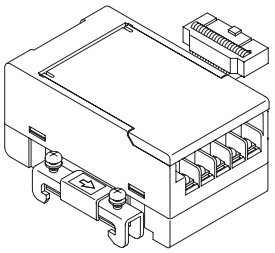

● Single unit serial transmission device (adapter) station (slim slot)

4GR - OPP4 - 1D

Ⓐ Wiring method

Code	Description			
Ⓐ Wiring method				
1D	T7D1	DeviceNet	NPN	16 points
1G	T7G1	CC-Link	NPN	16 points
1L	T7L1	SAVE NET	NPN	16 points
1S	T7S1	CompoNet	NPN	16 points
1S-P	T7SP1		PNP	16 points

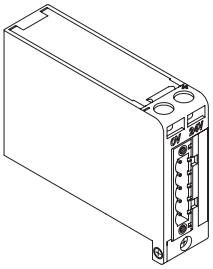

● Single unit serial transmission device (adapter) station (slim slot)

4GR - OPP7 - 2G

Ⓐ Wiring method

Code	Description			
Ⓐ Wiring method				
1G	T8G1	CC-Link	NPN	16 points
2G	T8G2			32 points
1G-P	T8GP1		PNP	16 points
2G-P	T8GP2			32 points
1P	T8P1	PROFIBUS-DP	NPN	16 points
2P	T8P2			32 points
1P-P	T8PP1		PNP	16 points
2P-P	T8PP2			32 points
1EC	T8EC1	EtherCAT	NPN	16 points
2EC	T8EC2			32 points
1EC-P	T8ECP1		PNP	16 points
2EC-P	T8ECP2			32 points
1EN	T8EN1	EtherNet/IP	NPN	16 points
2EN	T8EN2			32 points
1EN-P	T8ENP1		PNP	16 points
2EN-P	T8ENP2			32 points
1D	T8D1	DeviceNet	NPN	16 points
2D	T8D2			32 points
1D-P	T8DP1		PNP	16 points
2D-P	T8DP2			32 points
1EB	T8EB1	CC-Link IEF Basic	NPN	16 points
2EB	T8EB2			32 points
1EB-P	T8EBP1		PNP	16 points
2EB-P	T8EBP2			32 points
1EP	T8EP1	PROFINET	NPN	16 points
2EP	T8EP2			32 points
1EP-P	T8EPP1		PNP	16 points
2EP-P	T8EPP2			32 points

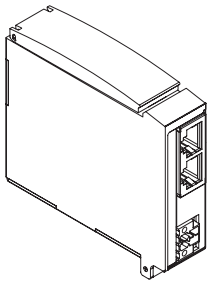

Related products Mounting rail, silencer, blanking plug, tag plate

● Mounting rail

N4GR-BAA [length]

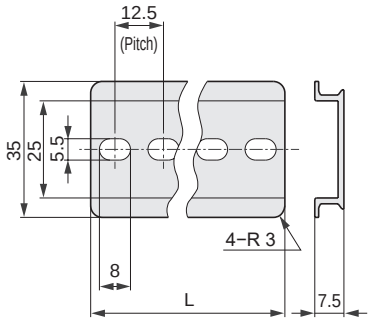

· Minimum length is 87.5 mm.
· Select the length at 12.5 mm pitch.
· For details, refer to page 427.

● Silencer

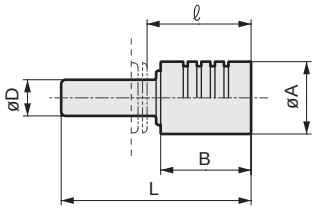

Model No.	D	L	A	B	ℓ
SLW-H6	ø6	41	16	20	23.5
SLW-H8	ø8	42	16	20	23
SLW-H10	ø10	53	20	27	31.5

● Blanking plug

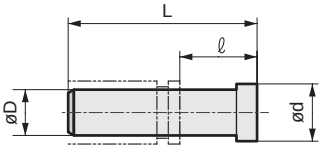

Model No.	D	L	ℓ	d
GWP4-B	ø4	27	16	6
GWP6-B	ø6	29	11.5	8
GWP8-B	ø8	33	14	10
GWP10-B	ø10	40	18.5	12

PG-P2-B (for ø1.8)

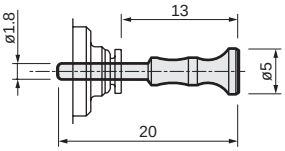

Related products Air supply spacer

● Air supply spacer

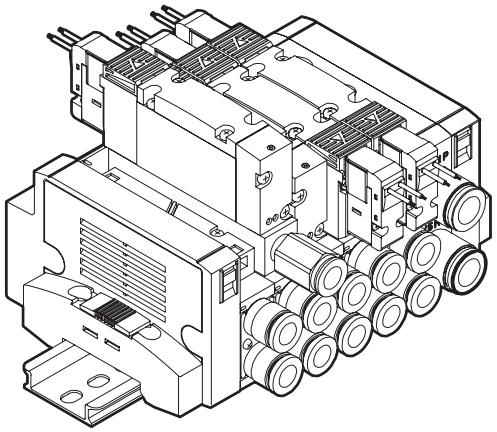

Specifications

Model No.	P→A/B		A/B→R		Weight g
	C[dm³/(s·bar)]	b	C[dm³/(s·bar)]	b	
4G1	0.70	0.23	0.93	0.16	8
4G2	1.6	0.17	1.8	0.16	35

*1: Values are when a valve is mounted.
*2: Effective cross-sectional area S and sonic conductance C are converted as S ≈ 5.0 × C.

How to order discrete units

4G 2 R − P − GWS6

Ⓐ Air supply spacer model No.

Ⓑ Port size *1

Code	Description	Model No. 4GB1	Model No. 4GB2
Ⓐ Air supply spacer model No.			
1	For 4G1	●	
2	For 4G2		●
Ⓑ Port size			
Blank	M5 (4G1), Rc1/8 (4G2)	●	●
GWS4	ø4 fitting	●	
GWS6	ø6 fitting	●	●
GWS8	ø8 fitting		●
06N	NPT1/8 thread		●
06G	G1/8 thread		●

is not available.

Attachments: 4G1 2 mounting screws, 1 dedicated gasket
4G2 2 mounting screws, 2 PR check valves, 1 body gasket

⚠ Precautions for model selection

*1 : Specify the positions and quantity of air supply spacers for manifold in the manifold specifications sheet.
*2 : If the port A/B fitting is elbow, turn the air supply port of the air supply spacer toward the reverse side ("a" solenoid side).
*3 : If the elbow (upward) port A/B fitting is used for the reduced wiring manifold, the air supply spacer cannot be selected.
*4 : Combination with the masking plate is not supported.

Dimensions

● 4G1

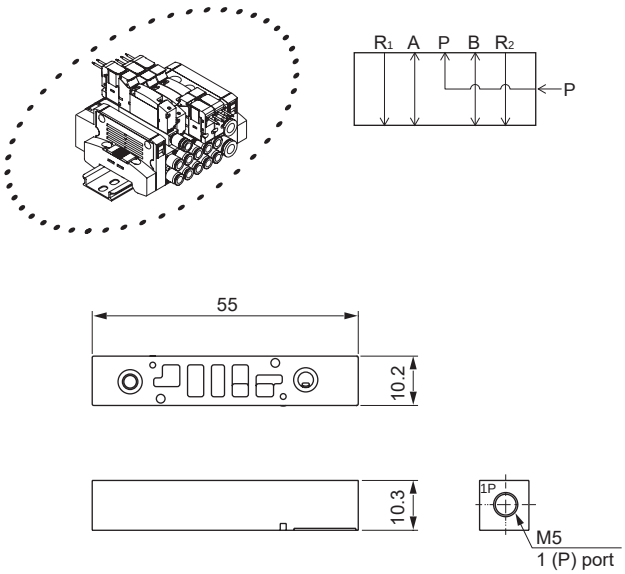

● 4G2

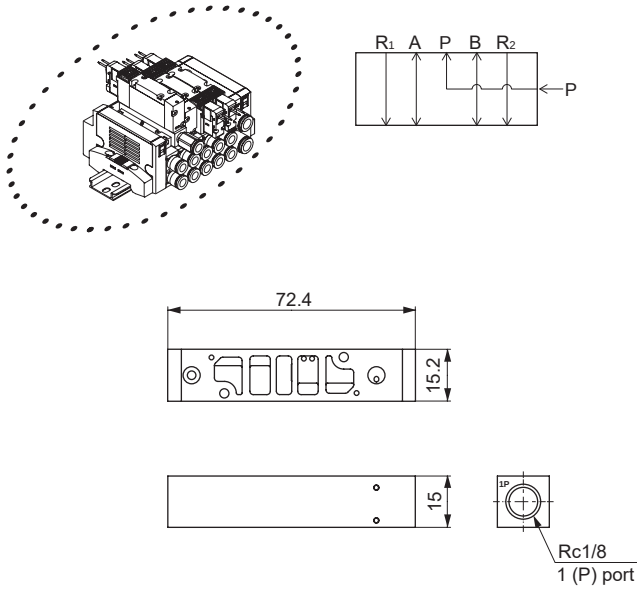

Dimensions when mounted

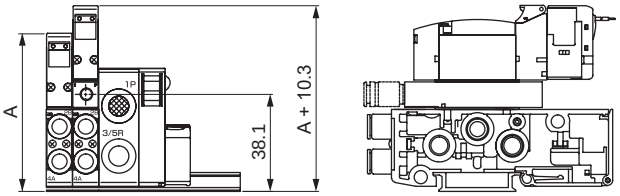

Dimensions when mounted

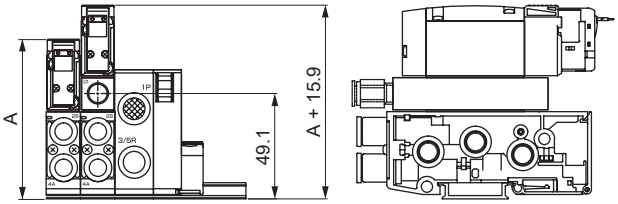

Note: For A dimension, check the dimensions of the respective specifications.

Related products Exhaust spacer

● Exhaust spacer

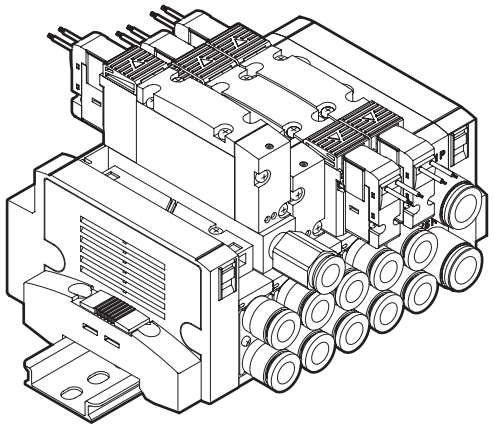

Specifications

Model No.	P→A/B		A/B→R		Weight g
	C[dm³/(s·bar)]	b	C[dm³/(s·bar)]	b	
4G1	0.94	0.28	0.68	0.33	7
4G2	1.5	0.24	1.9	0.24	34

*1: Values are when a valve is mounted.
*2: Effective cross-sectional area S and sonic conductance C are converted as S ≈ 5.0 × C.

How to order discrete units

4G (2) R − R − (GWS6)

Ⓐ Exhaust spacer model No.
Ⓑ Port size *1

Code	Description	Model No. 4GB1	Model No. 4GB2
Ⓐ Exhaust spacer model No.			
1	For 4G1	●	
2	For 4G2		●
Ⓑ Port size			
Blank	M5 (4G1), Rc1/8 (4G2)	●	●
GWS4	ø4 fitting	●	
GWS6	ø6 fitting	●	●
GWS8	ø8 fitting		●
06N	NPT1/8 thread		●
06G	G1/8 thread		●

is not available.

Attachments: 4G1 2 mounting screws, 1 dedicated gasket
4G2 2 mounting screws, 2 PR check valves, 1 body gasket

⚠ Precautions for model selection

*1 : Specify the positions and quantity of exhaust spacers for manifold in the manifold specifications sheet.
*2 : If the port A/B fitting is elbow, turn the exhaust port of the exhaust spacer toward the reverse side ("a" solenoid side).
*3 : If elbow upward port A/B fitting is used for the reduced wiring manifold, the exhaust spacer cannot be selected.
*4 : Combination with the masking plate is not supported.

Dimensions

● 4G1

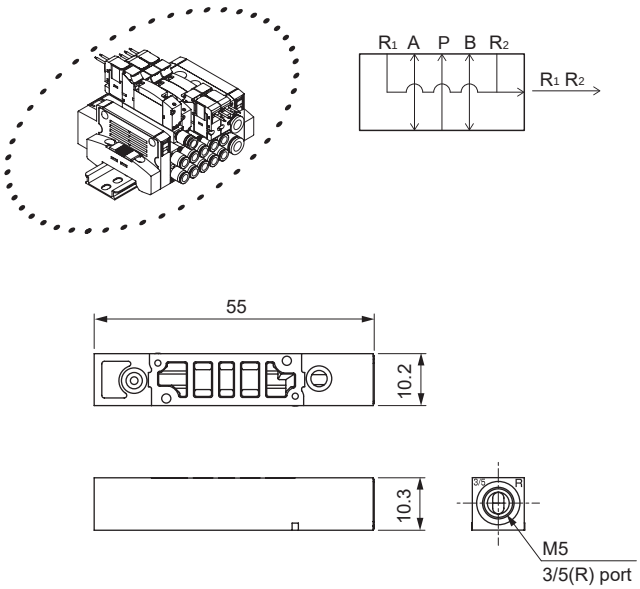

● 4G2

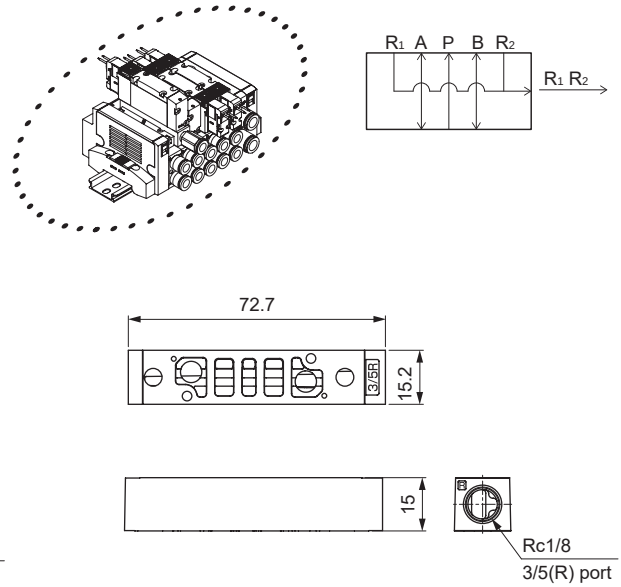

Dimensions when mounted

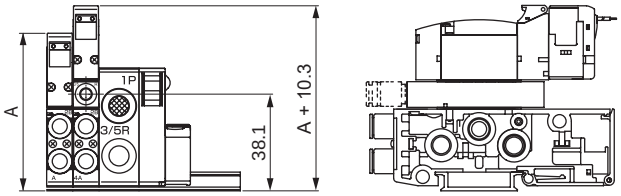

Dimensions when mounted

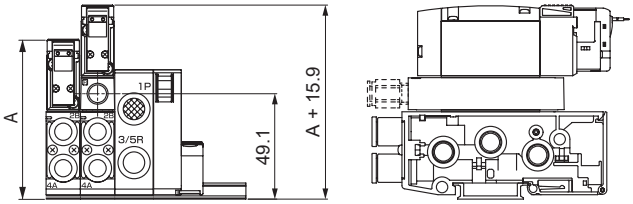

Note: For A dimension, check the dimensions of the respective specifications.

Related products In-stop valve spacer

● In-stop valve spacer

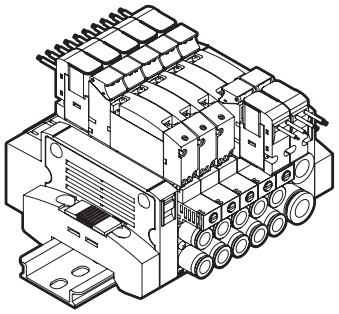

Specifications

Model No.	P→A/B		A/B→R		Weight g
	C[dm³/(s·bar)]	b	C[dm³/(s·bar)]	b	
4G1	0.54	0.03	0.82	0.27	17
4G2	1.5	0.17	1.6	0.20	63

*1: Values with base piping and 2-position valve mounted.
*2: The effective cross-sectional area when discharging residual pressure is 1.0 mm² (reference value).
*3: Effective cross-sectional area S and sonic conductance C are converted as S ≈ 5.0 × C.
Attachments: 2 PR check valves, 1 body gasket

How to order discrete units

4G1 R - IS
4G2 R - IS

In-stop valve spacer

JIS symbol

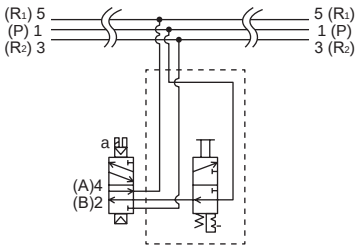

⚠ Precautions for model No. selection

*1: Specify the spacer mounting position and quantity in manifold specifications sheet.
*2: If the port A/B fitting is elbow (upward), turn the operation part of the in-stop valve spacer toward the reverse side ("a" solenoid side).
*3: If elbow (upward) port A/B fitting is used for the reduced wiring manifold, the in-stop valve spacer cannot be selected.
*4: The in-stop valve spacer cannot be used with the external pilot (K).
*5: When retrofitting to the reduced wiring manifold, the existing wiring may be too short. Contact CKD for details.

Dimensions

● 4G1

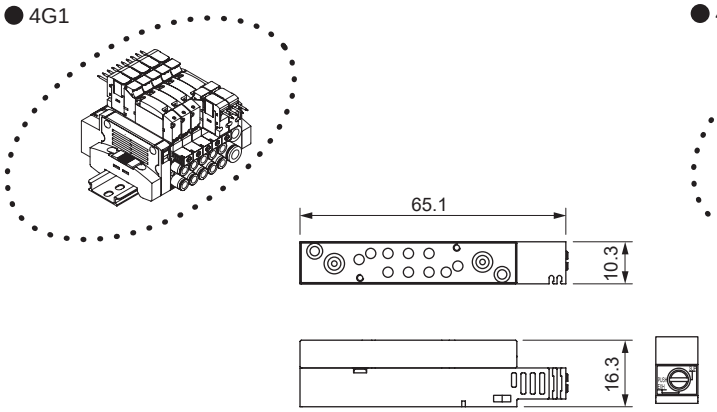

● 4G2

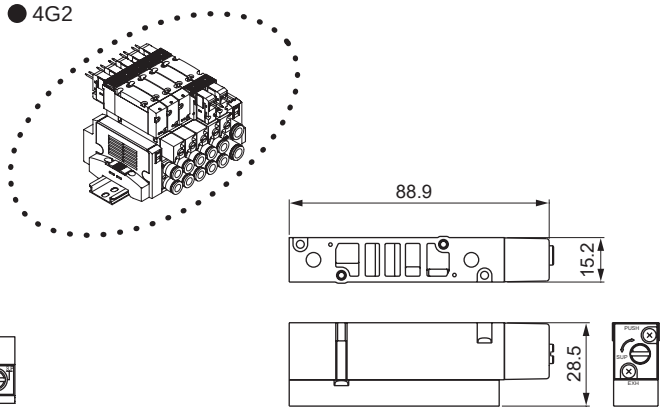

Dimensions when mounted

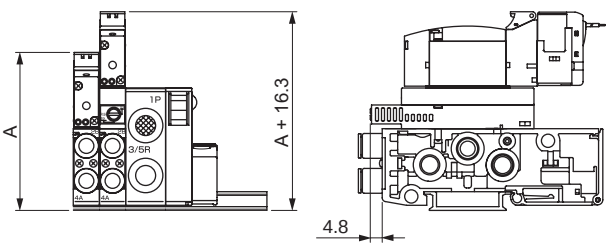

Dimensions when mounted

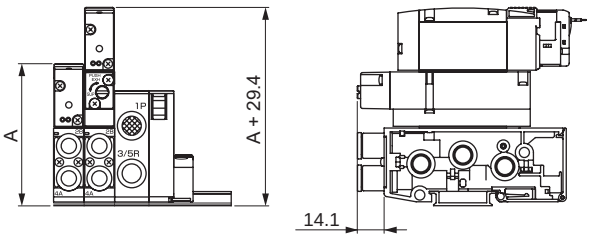

Note: For A dimensions, check the dimensions of the respective specifications.

Related products Spacer pilot check valve

● Spacer pilot check valve

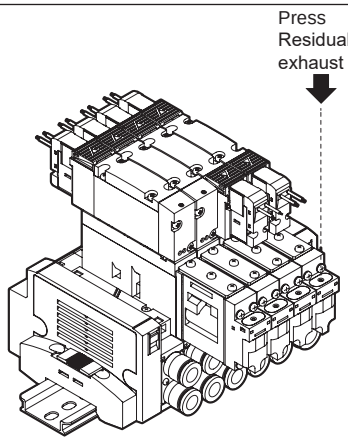

Specifications

1 MPa ≈ 145.0 psi, 1 MPa = 10 bar

Pilot check valve		4G2R-PC-M
Working fluid		Compressed air
Max. working pressure	MPa	0.7 (≈101 psi, 7 bar)
Min. working pressure	MPa	0.2 (≈29 psi, 2 bar)
Proof pressure	MPa	1.05 (≈152 psi, 10 bar)
Effective cross-sectional area	mm^2	4 (Solenoid valve)
Ambient temperature	°C	-5 (23°F) to 55 (131°F) (no freezing)
Working fluid temperature	°C	5 (41°F) to 55 (131°F)
Lubrication	*1	Not required
Atmosphere		Cannot be used in corrosive gas environment.
Weight	g	182.5

*1: Use turbine oil Class 1 ISO VG32 for lubrication.
Note that excessive lubricant may cause unstable operation.

JIS symbol

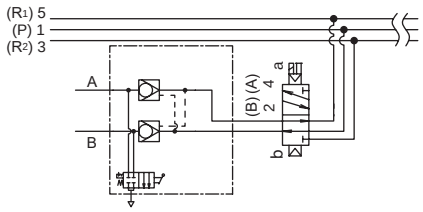

Note: Be careful, as using a cylinder with a large diameter (more than ø50 as a guide) with little exhaust restriction (e.g., no speed controller, no silencer) may lead to a decrease in intermediate stop accuracy and to stopping error.

Discrete model No.

4G2R - PC - M

- 4G2R: Model No.
- PC: Pilot check valve
- M: With residual pressure release function

⚠ Precautions for model No. selection

*1: Specify the spacer positions in the manifold specifications sheet.
*2: Spacer pilot check valve is not available when the fitting for port A/B is elbow.
*3: Stacking of spacers is not possible.
*4: A spacer cannot be combined with a masking plate.
*5: The spacer pilot check valve can be mounted only when the piping method is base piping.
*6: When adding a spacer to the reduced wiring manifold, the socket assembly lead wire will not reach far enough. Replace the valve block.
(For details, refer to page 403.)

Dimensions

● MN4GB2

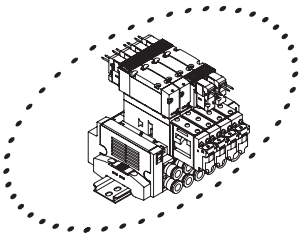

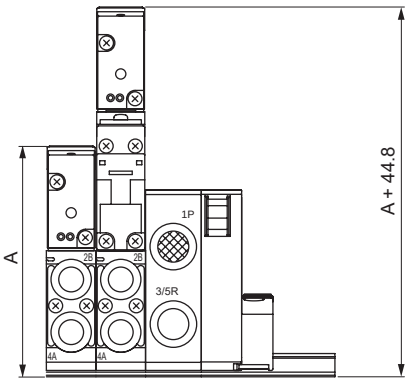

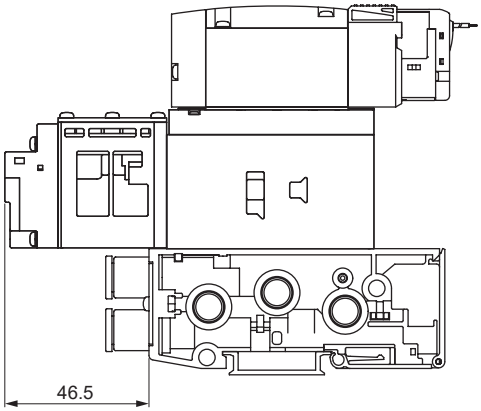

Note: For A dimension, check the dimensions of the respective specifications.

● Pilot check valve

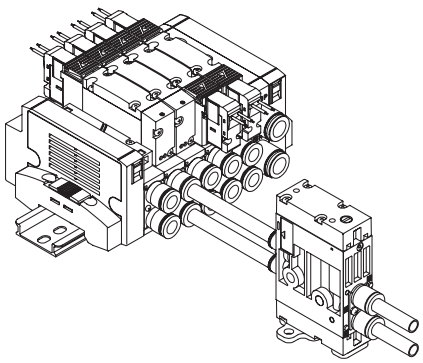

For details, refer to page 194.

Related products Double wiring (with single spare wiring)

● Double wiring (with single spare wiring) (W1)

For manifolds

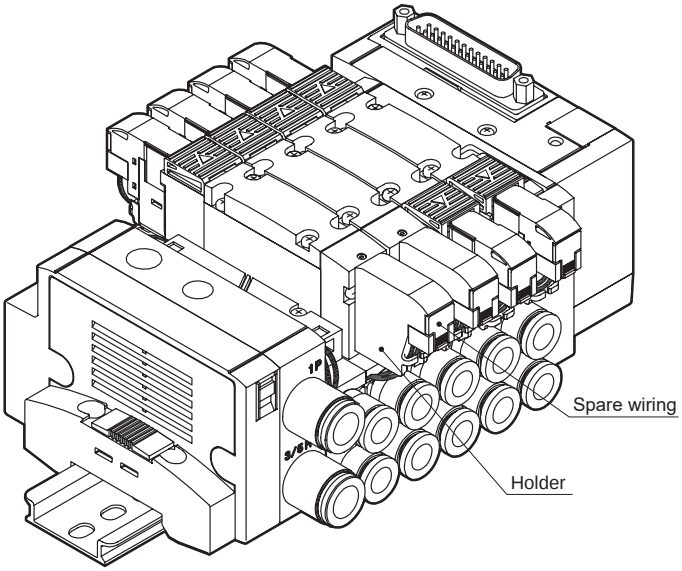

Spare wiring (holder and A type socket assembly) is included on the cap side for single solenoid valves.
This simplifies the workflow when changing valves from a single solenoid to a double solenoid, as the A socket assembly does not have to be prepared separately.

For single valves (2-position single)

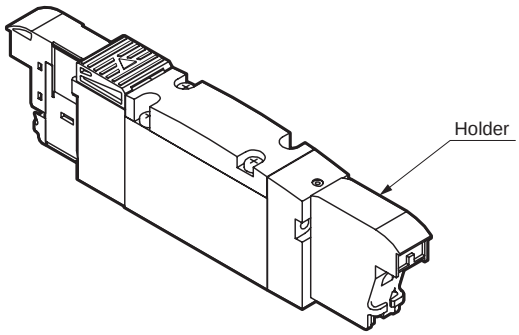

A holder for retaining the socket assembly is included.
(Not included for A type sockets.)
This can be used to hold the socket assembly no longer required when changing the valve from a double solenoid to a single solenoid.

Example of model No.

● Manifold model No. (example)

MN4GB1 1 0 R - C6 - T30 W1 H - 10 - 3

- A Model No.
- B Solenoid position
- C Port size
- D Wiring method
- E Terminal/connector pin array
- F Option
- G Station No.
- H Voltage

Code	Description
E Terminal/connector pin array	
W1	Double wiring (with single spare wiring)

* Refer to How to order for each series for details about model numbers.
Not compatible with combination with port size C*NC or C*NO.

Related products Reduced wiring duct

● Reduced wiring duct (Q)

Holds A-connector lead wires.
· Can be selected with reduced wiring manifolds (T* and T*R) and reduced wiring single valve units (A2N).

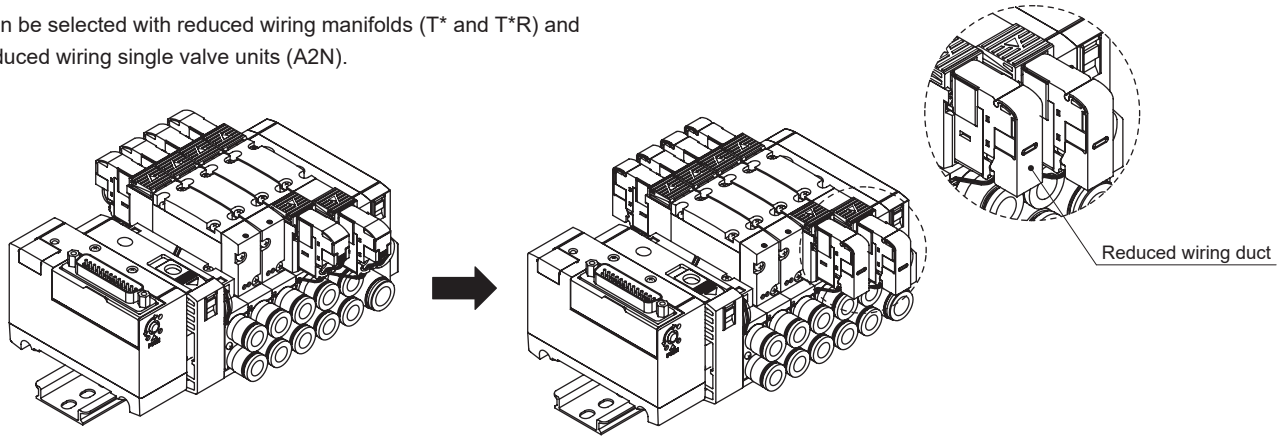

Standard

When Q (reduced wiring duct) selected

Example of model No.

● Manifold model No. (example)

MN4GB1 **1** 0 R - **C6** - **T30** **W** Q - **10** - **3**

- Ⓐ Model No.
- Ⓑ Solenoid position
- Ⓒ Port size
- Ⓓ Wiring method
- Ⓔ Terminal/ connector pin array
- Ⓖ Station No.
- Ⓗ Voltage

Code	Description
Ⓕ **Option**	
Q	Reduced wiring duct

● Dimension lines

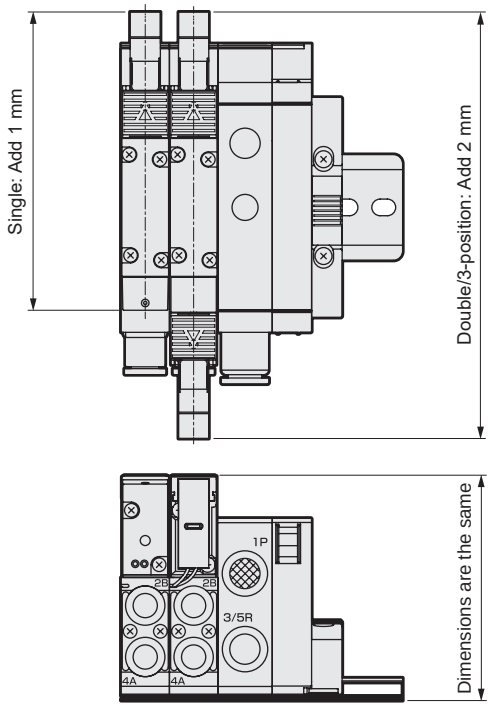

Reduced wiring duct closed state

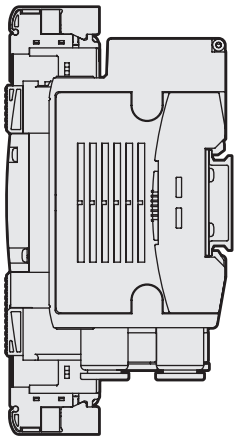

Open state

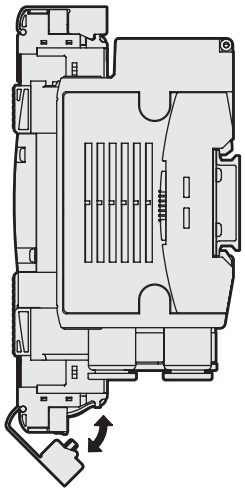

Related parts

1. MN4G cartridge push-in fitting for supply and exhaust block

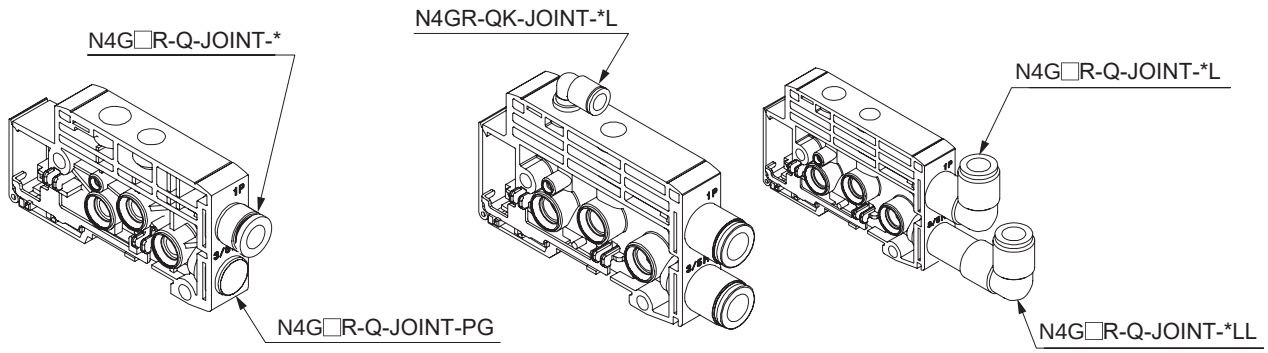

1.1 MN4G1 supply and exhaust block, fitting for 1(P), 3/5(R)

Bore size	Part model No.
ø6 straight	N4G1R-Q-JOINT-6
ø8 straight	N4G1R-Q-JOINT-8
ø6 elbow	N4G1R-Q-JOINT-6L, 6LL
ø8 elbow	N4G1R-Q-JOINT-8L, 8LL
ø1/4" straight	N4G1R-Q-JOINT-6N
ø5/16" straight	N4G1R-Q-JOINT-8N
ø1/4" elbow	N4G1R-Q-JOINT-6LN, 6LLN
ø5/16" elbow	N4G1R-Q-JOINT-8LN, 8LLN
Plug cartridge	N4G1R-Q-JOINT-PG

1.2 MN4G2 supply and exhaust block, fitting for 1(P), 3/5(R)

Bore size	Part model No.
ø8 straight	N4G2R-Q-JOINT-8
ø10 straight	N4G2R-Q-JOINT-10
ø8 elbow	N4G2R-Q-JOINT-8L, 8LL
ø10 elbow	N4G2R-Q-JOINT-10L, 10LL
ø5/16" straight	N4G2R-Q-JOINT-8N
ø3/8" straight	N4G2R-Q-JOINT-10N
ø5/16" elbow	N4G2R-Q-JOINT-8LN, 8LLN
ø3/8" elbow	N4G2R-Q-JOINT-10LN, 10LLN
Plug cartridge	N4G2R-Q-JOINT-PG

1.3 MN4G1/2 common, fitting for 12/14(PA)

Bore size	Part model No.
ø6 straight	N4GR-QK-JOINT-6
ø6 elbow	N4GR-QK-JOINT-6L

MEMO

M4GB1 to 3 Series

How to fill out metal base M4G Series manifold specifications sheet

● Manifold model No. (example)

M 4 GB1 8 0R- CX - T30 [ ] - 9 - 3

Solenoid valves	Solenoid position	Port size	Electrical connections	Terminal connector pin array method	Station No.	Voltage

Precautions for fitting mix CX

The port A/B fitting can be selected freely by indicating "CX" in the port size area.

Selectable cartridge fittings

4G1 CF, C18, C4, C6, C8, x (plug)
4G2 C4, C6, C8, C10, x (plug)
4G3 C6, C8, C10, x (plug)

* Port A/B fitting mix with body piping is not supported. 4G1 C8 and 4G2 C10 base piping types are available on a made-to-order basis. Fitting mix CX supports only the combinations of C8 and X (plug) for 4G1 and C10 and X (plug) for 4G2.

How to use base piping M4GB*10 as a 3-port valve

Usable as NO/NC by attaching a plug cartridge on one side of port A/B. Indicate "X" in the fitting CX column.

Switching method	Plug mounting port
NC (Normally closed)	B
NO (Normally open)	A

For female thread specifications, indicate the required number of plugs in the "Threaded plug" area at the end.
Female threads and cartridge fitting cannot be used together in one manifold set.

Elbow specifications

● The push-in L fitting (upward) supports only the single solenoid manifold.
Port A is a long elbow and port B a short elbow.
● Port A/B sizes are the same for elbow specifications.

Solenoid valve model No.	Fitting CX A	Fitting CX B	Installation position 1	2	3	4	5	6	7	8	9	10	11	12	13	14	15	16	17	18	19	20	21	22	23	24	Quantity
4GB1 1 9R- CX	C6	X	○	○																							2
4GB1 1 9R- C6					○	○																					2
4GB1 2 9R- C6							○	○																			2
4GB1 5 9R- CX	C6	C4							○	○																	2
4GB1 [ ] 9R- [ ]																											
3GB1 [ ] 9R- [ ]																											
3GB1 [ ] 9R- [ ]																											
Masking plate 4G1R-MP (S)																											
Masking plate 4G1R-MP (D)											○																1

Indicate X for a plug

Fill in "CX" when changing the fitting combination

Mounting Rail	L_2 = [ ] * Write an integer multiple of 12.5.	Included Part	Blanking plug				Threaded plug		Silencer			
			PG-P2-B		GWP4-B		4G1R-M5P		SLW-6S		SLW-6A	
			GWP6-B		GWP8-B							
			Cable with D-sub-connector		4GR-CABLE-D0□-□							

Push-in fitting tube remover (included as standard) ☑ Not required (check the box)

If the tube remover (standard attachment) is not required, place a check.

M4GB1*OR-C8 does not have a removal tool included.

* A reference circuit diagram for the above manifold (example) is shown on the next page.

From the manifold specifications for each model, select and fill out the appropriate form.

M4GB1 (page 422), M4GB2 (page 423), M4GB3 (page 424)

*1: Select the silencer mounting after confirming the dimensions.

How to fill out wiring specifications sheet

Not required for standard wiring and double wiring.

● Wiring specifications sheet (example)

Complete these specifications when specifying the wiring order and additional cables.

Connector pin No.		Installation position															
T30/T30R	T50/T50R/T6*	1	2	3	4	5	6	7	8	9	10	11	12	13	14	15	16	17
1	1	a																
14	2		a															
2	3			a														
15	4																	
3	5				a													
16	6																	
4	7					a												
17	8					b												
5	9 - Power supply						a											
18	10 + (COM) Power supply						b											
6	11							a										
19	12							b										
7	13								a									
20	14								b									
8	15									(a)								
21	16									(b)								
9	17																	
22	18																	
10	19 - Power supply																	
23	20 + (COM) Power supply																	
11																		
24																		
12																		
25																		
13 (COM)																		

Spare cable wiring precautions (1)

* Note that when T50 wiring is used, the COM polarity is + (plus).
* When T50 wiring is used, connector pin numbers 9, 10, 19, and 20 cannot be specified, because they are used for the external input power supply.
* Wiring is sequential from connector pin No. 1 in standard wiring. Contact CKD for special wiring order.

Precautions regarding spare wiring

(1) Spare wires are provided on the masking plate for the reduced wiring manifold. (Refer to page 416)
The number of wires for spare wiring can be specified by selecting the masking plate within the specifications.
4G *R -MP(S): 1 pc
4G *R -MP(D): 2 pcs
Indicate (a) or (b) on the manifold specifications sheet for masking plate spare wiring.

Reference circuit diagram The simplified circuit diagram of the manifold model No. (example) on the previous page is shown below.

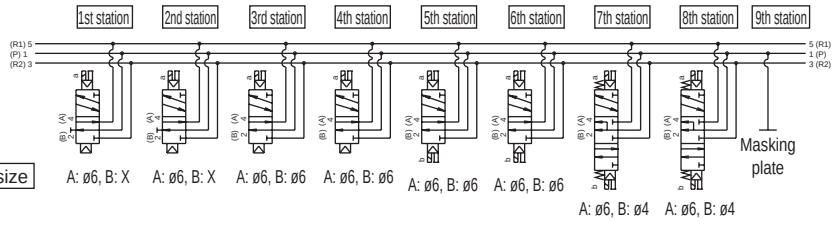

Port size

1st station	2nd station	3rd station	4th station	5th station	6th station	7th station	8th station	9th station
A: ø6, B: X	A: ø6, B: X	A: ø6, B: ø6	A: ø6, B: ø6	A: ø6, B: ø6	A: ø6, B: ø6	A: ø6, B: ø4	A: ø6, B: ø4	

* The manifold station numbers are set in order from the left with the piping port facing forward.

For wiring specifications sheets, refer to page 432 to page 434.

Metal base, M4GB1

M4GB1 Manifold specifications sheet

Date issued / /

Company

Contact

Order No.

● Contact ● Quantity set (s) ● Delivery date /

Slip No.	Order No.

● Manifold model No.

M □ **GB1** □ **0R-** □ **-** □ □ □ □ **-** □ **-** □

Solenoid valves	Solenoid position	Port size	Electrical connection reduced wiring connection	Terminal connector pin array method	Option	Mounting	Station No.	Voltage

Solenoid valve model No.	Fitting CX		Valve installation position																							Quantity
	A	B	1	2	3	4	5	6	7	8	9	10	11	12	13	14	15	16	17	18	19	20	21	22	23	24	
4GB1 □ **9R-** □ **-** □																											
4GB1 □ **9R-** □ **-** □																											
4GB1 □ **9R-** □ **-** □																											
4GB1 □ **9R-** □ **-** □																											
4GB1 □ **9R-** □ **-** □																											
3GB1 □ **9R-** □ **-** □																											
3GB1 □ **9R-** □ **-** □																											
Masking plate **4G1R-MP (S)-** □																											
Masking plate **4G1R-MP (D)-** □																											
Air supply spacer **4G1R-P-** □																											
In-stop valve spacer **4G1R-IS**																											
Exhaust spacer **4G1R-R-** □																											

Mounting rail	L_2 = □ * Write an integer multiple of 12.5.	Included parts	Blanking plug				Threaded plug		Silencer			
			PG-P2-B	□	**GWP4-B**	□	**4G1R-M5P**	□	**SLW-6S**	□	**SLW-6A**	□
			GWP6-B	□	**GWP8-B**	□						
			Cable with D-sub-connector		4GR-CABLE-D0□-□	□	Push-in fitting tube remover (included as standard) □ Not required (check the box)					

* M4GB C8 does not have a tube removal tool included.

Metal base, M4GB2

M4GB2 Manifold specifications sheet

Date issued / /

Company

Contact

Order No.

● Contact ● Quantity set (s) ● Delivery date /

Slip No.	Order No.

● Manifold model No.

M ☐ **GB2** ☐ **0R-** ☐ **-** ☐ ☐ ☐ ☐ **-** ☐ **-** ☐

Solenoid valves / Solenoid position / Port size / Electrical connection reduced wiring connection / Terminal connector pin array method / Option / Mounting / Station No. / Voltage

Solenoid valve model No.	Fitting CX		Valve installation position																							Quantity
	A	B	1	2	3	4	5	6	7	8	9	10	11	12	13	14	15	16	17	18	19	20	21	22	23	24	
4GB2☐9R-☐-☐																											
4GB2☐9R-☐-☐																											
4GB2☐9R-☐-☐																											
4GB2☐9R-☐-☐																											
4GB2☐9R-☐-☐																											
3GB2☐9R-☐-☐																											
3GB2☐9R-☐-☐																											
Masking plate **4G2R-MP (S)-☐**																											
Masking plate **4G2R-MP (D)-☐**																											
Air supply spacer **4G2R-P-☐**																											
In-stop valve spacer **4G2R-IS**																											
Exhaust spacer **4G2R-R-☐**																											
Pilot check valve spacer **4G2R-PC-M***																											

Mounting rail	L_2 = ☐ * Write an integer multiple of 12.5.	Included parts	Blanking plug				Threaded plug		Silencer			
			GWP4-B	☐	**GWP6-B**	☐	**4G2R-06P**	☐	**SLW-8S**	☐	**SLW-8A**	☐
			GWP8-B	☐	**GWP10-B**	☐						
			Cable with D-sub-connector		4GR-CABLE-D0☐-☐	☐						

Metal base, M4GB3

M4GB3 Manifold specifications sheet

Date issued / /

Company

Contact

Order No.

● Contact ● Quantity set (s) ● Delivery date /

Slip No.	Order No.

● Manifold model No.

M ☐ **GB3** ☐ **0R-** ☐ **-** ☐ ☐ ☐ ☐ **-** ☐ **-** ☐

Solenoid valves | Solenoid position | Port size | Electrical connection reduced wiring connection | Terminal connector pin array method | Option | Mounting | Station No. | Voltage

Solenoid valve model No.	Fitting CX		Valve installation position																							Quantity
	A	B	1	2	3	4	5	6	7	8	9	10	11	12	13	14	15	16	17	18	19	20	21	22	23	24	
4GB3 ☐ **9R-** ☐ **-** ☐																											
4GB3 ☐ **9R-** ☐ **-** ☐																											
4GB3 ☐ **9R-** ☐ **-** ☐																											
4GB3 ☐ **9R-** ☐ **-** ☐																											
4GB3 ☐ **9R-** ☐ **-** ☐																											
4GB3 ☐ **9R-** ☐ **-** ☐																											
4GB3 ☐ **9R-** ☐ **-** ☐																											
Masking plate **4G3R-MP (S)-** ☐																											
Masking plate **4G3R-MP (D)-** ☐																											
Air supply spacer **4G3R-P-** ☐																											
In-stop valve spacer **4G3R-IS**																											
Exhaust spacer **4G3R-R-** ☐																											

Mounting rail	L_2 = ☐ * Write an integer multiple of 12.5.	Included parts	Blanking plug						Threaded plug		Silencer			
			GWP6-B	☐	**GWP8-B**	☐	**GWP10-B**	☐	**4G3R-08P**	☐	**SLW-10A**	☐	**SLW-10L**	☐
			Cable with D-sub-connector		4GR-CABLE-D0☐-☐	☐								

MEMO

MN4GB Series

How to fill out block manifold MN4G Series manifold specifications sheet

● Manifold model No. (example)

MN 4 GB1 8 0R - CX - T50 W H - 8 - 3

Ⓐ Model No. Ⓑ Solenoid position Ⓒ Port size Ⓓ Electrical connections (Reduced wiring connection) Ⓔ Terminal/connector pin array (Note: Fill in for reduced wiring.) Ⓕ Option Ⓖ Station No. Ⓗ Voltage

When filling in this field, select the model No. from "Block configurations" (pages 400 to 417).

Part name	Model No.	Layout position 1	2	3	4	5	6	7	8	9	10	11	12	13	14	15	16	17	18	19	20	21	22	23	24	25	26	27	28	29	30	Quantity
Wiring block (pages 406 and 407)	N4G1R-T 50	○																														1
With solenoid valve Valve block (page 402)	N4GB1 1 0R- C4 -		○	○																												2
	N4GB1 2 0R- C6 -					○																										1
	N4GB1 3 0R- C4 -				○																											1
	N4GB1 0R- -																															
	N4GB1 0R- -																															
	N4GB1 0R- -																															
	N3GB1 1 0R- C4 -									○	○	○																				3
	N3GB1 0R- -																															
Valve block with masking plate (Refer to page 402)	N4GB1R-MP																															
	N4GB1R-MPS																															
	N4GB1R-MPD						○																									1
Supply and exhaust block (page 404)	N4G1R-Q - 8L							○					○																			2
	N4G1R-Q -																															
	N4G1R-Q -																															
Partition block (page 405)	N4G1R-S A								○																							1
	N4G1R-S																															
	N4G1R-S																															
End block (page 405)	N4G1R-E R													○																		1
	N4G1R-E																															

Mounting rail	L_2 = (How to calculate length on next page)	Blanking plug						Silencer				Tag plate (included)		Included parts
		GWP4-B		GWP6-B		GWP8-B		SLW-H6		SLW-H8		A	○	
		Cable with D-sub-connector		4GR-CABLE-D0□-□				Push-in fitting tube remover (included as standard) ☑ Not required (check the box)						

* A circuit diagram of the above manifold model No. (example) is provided on the following page. Use for reference.

Place a check here if the tube remover (standard attachment) is not required.

Preparing manifold specifications sheet

● Complete from the left end, with the piping port facing forward.
(Fill in the block model No. selected from "Block configurations" (pages 400 to 417) and array directions.)
● Write the total number of blocks specified in the quantity field in the table far right.
● Mark a circle for required attachment parts.
● Indicate the mounting rail length. (Fill in only when a length other than the standard length is required.)
● As there are manifold specifications sheets for each of the various series, fill in the form for the corresponding specifications.
· MN4GB1: Page 429
· MN4GB2: Page 430
· MN4GBx1/2 (Mix manifold): Page 431

MN4GB Series

● Mounting rail model No.: N4GR-BAA Length

Mounting rail length (L2)

(1) Determine the rail length using the calculation method shown below. The obtained length is standard.
(2) For standard length, length (L2) is not required on the specifications sheet. Indicate the length when using a non-standard length.

● How to determine the length of the mounting rail

Manifold length (L1) = (A × Valve block Quantity) + (B × Supply and exhaust block Quantity) + (C × Partition block Quantity) + D (Wiring block) + E (Mixed block)

Mounting rail length (L2) = L2' × 12.5 A, B, C, D, and E indicate the length (width) of each block.

$$L2' : \frac{L1 + 40}{12.5} \rightarrow \text{decimals rounded up}$$

Rail mounting pitch (L3) = L2 - 12.5

Block length (width) dimensions table (mm)

			MN4GB1	MN4GB2	MN4G1/2MIX	
					MN4GB1	MN4GB2
A	Valve block		10.5	16	10.5	16
B	Supply and exhaust block		16	18	16	18
C	Partition block		10.5	10.5	10.5	10.5
D	Individual wiring		41.2	46.2	43.7	
	Wiring block for reduced wiring	T10/T11	83.9	86.4	86.4	
		T10R/T11R	83.9	86.4	83.9	
		T30/T5*	69.4	71.9	71.9	
		T30R/T5*R	69.4	71.9	69.4	
		T6G1	143.6	146.1	146.1	
		T7*	64.4	66.9	66.9	
		T8*	64.4	66.9	66.9	
E	Mixed block				16	

* The end block is included in the wiring block.

● Mounting rail length quick reference table

L1: Manifold Length	47.5 or less	47.5 Over to 60 or less	60 to 72.5	72.5 to 85	85 to 97.5	97.5 to 110	110 to 122.5	122.5 to 135	135 to 147.5	147.5 to 160	160 to 172.5	172.5 to 185	185 to 197.5	197.5 to 210	210 to 222.5	222.5 to 235	235 to 247.5	247.5 to 260	260 to 272.5	272.5 to 285	285 to 297.5	297.5 to 310	310 to 322.5	322.5 to 335	335 to 347.5	347.5 to 360
L2: Rail Length	87.5	100	112.5	125	137.5	150	162.5	175	187.5	200	212.5	225	237.5	250	262.5	275	287.5	300	312.5	325	337.5	350	362.5	375	387.5	400
Pitch L3	75	87.5	100	112.5	125	137.5	150	162.5	175	187.5	200	212.5	225	237.5	250	262.5	275	287.5	300	312.5	325	337.5	350	362.5	375	387.5

*1: When L1 exceeds this table, calculate the length by referring to "How to calculate the length of the mounting rail".

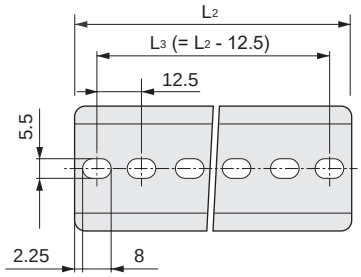

MN4GB Series

How to fill out wiring specifications sheet

Not required for standard wiring and double wiring.

● Wiring specifications sheet (example)

* The following example has been filled out in accordance with the manifold specifications sheet on the previous page.

Connector pin No.				Valve No.																							
T50/T50R	**T51/T51R**	**T52/T52R**	**T53/T53R**	1	2	3	4	5	6	7	8	9	10	11	12	13	14	15	16	17	18	19	20	21	22	23	24
1	1	1	1	**a**																							
2	2	2	2		**a**																						
3	3	3	3				**a**																				
4	4	4	4				**b**																				
5	5	5	5					**a**																			
6	6	6	6					**b**																			
7	7	7	7			**a**																					
8	8	8	8			**b**																					
9 - power supply	9	9 COM	9																								
10 + (COM) power supply	10	10 COM	10																								
11	11		11						**a**																		
12	12		12							**a**																	
13	13		13								**a**																
14	14		14																								
15	15		15																								
16	16		16																								
17	17		17																								
18	18		18																								
19 - power supply	19 COM		19																								
20 + (COM) power supply	20 COM		20																								
			21																								
			22																								
			23																								
			24																								
			25 COM																								
			26 COM																								

* Note that when the wiring method is T50/T50R, the COM polarity will be + (positive).

● Notes on wiring specifications

(1) Fill in and attach to the manifold specifications sheet for anything other than the standard wiring or double wiring. Consult with CKD, as products will be custom made in this case.

(2) The valve No. is determined by counting the valve blocks only in order from the left with the ports facing forward. Note that this differs from the installation position numbers.

(3) As the connector pin No. and valve No. differ for each reduced wiring method (T1*/T30/T5*/T6G1/T7*/T8*), fill out the form upon reviewing the notes (pages 816 to 835) for each.

(4) Wiring (socket assembly) is included with valve blocks with masking plates. A side only for "-MPS". Both A and B sides for "-MPD".

(5) Double solenoids or 3-position solenoid valves cannot be assembled to "-MPS". Order valve block with solenoid valve and carry out expansion.

(6) It is not possible to install spare wires for station expansion in advance. Wire the socket assembly of the solenoid valve for expansion of stations. Refer to page 836 for instructions on how to expand stations.

Reference circuit diagram Simplified circuit diagram of manifold model No. (example) from previous page

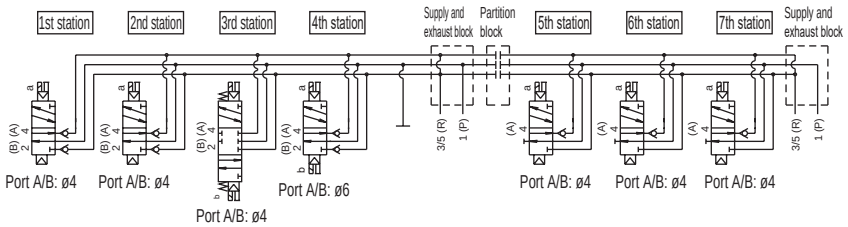

* The manifold station numbers are set in order from the left with the piping port facing forward.
(Wiring blocks, supply and exhaust blocks, partition block, and end block are not included in the manifold station No.)

* Fill in the model No. selected from "Block configurations" (pages 400 to 417) and each specification model No. page.

* With piping port facing front, arrangement positions are set in order from the left.

MN4GB1 Block manifold specifications sheet

● Contact ● Quantity set (s) ● Delivery date /

Slip No. | Order No.

Date issued / /

Company

Contact

Order No.

● Manifold model No.

MN4GB1 [ ] 0R - [ ] - [ ] [ ] [ ] - [ ] - [ ]

Ⓐ Model No. Ⓑ Solenoid position Ⓒ Port size Ⓓ Electrical connections (Reduced wiring connection) Ⓔ Terminal/connector pin array (Note: Fill in for reduced wiring.) Ⓕ Option Ⓖ Station No. Ⓗ Voltage

When filling in this field, select the model No. from "Block configurations" (pages 400 to 417).

Part name (Page)	Model No.	Layout position 1	2	3	4	5	6	7	8	9	10	11	12	13	14	15	16	17	18	19	20	21	22	23	24	25	26	27	28	29	30	Quantity
Wiring block (pages 406 and 407)	N4G1R-T [ ]																															
Valve block with solenoid valve (page 402)	N4GB1 [ ] 0R- [ ] - [ ]																															
	N4GB1 [ ] 0R- [ ] - [ ]																															
	N4GB1 [ ] 0R- [ ] - [ ]																															
	N4GB1 [ ] 0R- [ ] - [ ]																															
	N4GB1 [ ] 0R- [ ] - [ ]																															
	N4GB1 [ ] 0R- [ ] - [ ]																															
	N3GB1 [ ] 0R- [ ] - [ ]																															
	N3GB1 [ ] 0R- [ ] - [ ]																															
Valve block with masking plate (Refer to page 402)	N4GB1R-MP- [ ]																															
	N4GB1R-MPS- [ ]																															
	N4GB1R-MPD- [ ]																															
Air supply spacer (page 410)	4G1R-P- [ ]																															
	4G1R-P- [ ]																															
Exhaust spacer (Refer to page 412)	4G1R-R- [ ]																															
In-stop valve spacer Spacer (page 414)	4G1R-IS																															
Supply and exhaust block (Refer to page 404)	N4G1R-Q [ ] - [ ]																															
	N4G1R-Q [ ] - [ ]																															
	N4G1R-Q [ ] - [ ]																															
Partition block (Refer to page 405)	N4G1R-S [ ]																															
	N4G1R-S [ ]																															
	N4G1R-S [ ]																															
End block (Refer to page 405)	N4G1R-E [ ]																															
	N4G1R-E [ ]																															

Mounting rail	Blanking plug				Silencer				Tag plate (included)				Included parts
[ ] L_2 = * Write an integer multiple of 12.5. (How to determine the length: page 427)	PG-P2-B		GWP4-B		SLW-H6		SLW-H8		B1		B2		
	GWP6-B		GWP6-B										
	Cable with D-sub-connector		4GR-CABLE-D0□-□		Push-in fitting tube remover (included as standard) □ Not required (check the box)								

MN4GB2 Block manifold specifications sheet

● Contact ● Quantity set (s) ● Delivery date /

Slip No. | Order No.

Date issued / /

Company

Contact

Order No.

● Manifold model No.

MN4GB2 □ 0R - □ - □ □ □ - □ - □

Ⓐ Model No. Ⓑ Solenoid position Ⓒ Port size Ⓓ Electrical connections (Reduced wiring connection) Ⓔ Terminal/connector pin array (Note: Fill in for reduced wiring.) Ⓕ Option Ⓖ Station No. Ⓗ Voltage

When filling in this field, select the model No. from "Block configurations" (pages 400 to 417).

Part name (Page)	Model No.	Layout position 1	2	3	4	5	6	7	8	9	10	11	12	13	14	15	16	17	18	19	20	21	22	23	24	25	26	27	28	29	30	Quantity
Wiring block (pages 406 and 407)	N4G2R-T□																															
Valve block with solenoid valve (page 402)	N4GB2□0R-□-□																															
	N4GB2□0R-□-□																															
	N4GB2□0R-□-□																															
	N4GB2□0R-□-□																															
	N4GB2□0R-□-□																															
	N4GB2□0R-□-□																															
	N3GB2□0R-□-□																															
	N3GB2□0R-□-□																															
Valve block with masking plate (Refer to page 402)	N4GB2R-MP-□																															
	N4GB2R-MPS-□																															
	N4GB2R-MPD-□																															
Air supply spacer (page 410)	4G2R-P-□																															
	4G2R-P-□																															
Exhaust spacer (Refer to page 412)	4G2R-R-□																															
In-stop valve spacer Spacer (page 414)	4G2R-IS																															
Spacer pilot check valve (Refer to page 415)	4G2R-PC-M																															
Supply and exhaust block (Refer to page 404)	N4G2R-Q□-□																															
	N4G2R-Q□-□																															
	N4G2R-Q□-□																															
Partition block (Refer to page 405)	N4G2R-S□																															
	N4G2R-S□																															
	N4G2R-S□																															
End block (Refer to page 405)	N4G2R-E□																															
	N4G2R-E□																															

Mounting rail	Blanking plug				Silencer		Tag plate (included)		Included parts
L_2= □	GWP4-B		GWP8-B		SLW-H8		B		
* Write an integer multiple of 12.5. (How to determine the length: page 427)	GWP6-B		GWP10-B		SLW-H10				
	Cable with D-sub-connector		4GR-CABLE-D0□-□						

MN4GB1/2 Mix manifold specifications sheet

● Contact ● Quantity set (s) ● Delivery date /

Slip No. | Order No.

Date issued / /

Company

Contact

Order No.

● Manifold model No.

MN4GBX12R - ☐ **-** ☐ ☐ ☐ **-** ☐ **-** ☐

Ⓐ Model No. Ⓒ Port size Ⓓ Electrical connections (Reduced wiring connection) Ⓔ Terminal/connector pin array (Note: Fill in for reduced wiring.) Ⓕ Option Ⓖ Station No. Ⓗ Voltage

When filling in this field, select the model No. from "Block configurations" (pages 400 to 417).

Part name	Model No.	Layout position 1	2	3	4	5	6	7	8	9	10	11	12	13	14	15	16	17	18	19	20	21	22	23	24	25	26	27	28	29	30	Quantity
Wiring block (pages 406, 407)	N4G ☐ R-T ☐																															
Valve block with solenoid valve (page 402)	N4GB ☐ 0R- ☐ - ☐																															
	N4GB ☐ 0R- ☐ - ☐																															
	N4GB ☐ 0R- ☐ - ☐																															
	N4GB ☐ 0R- ☐ - ☐																															
	N4GB ☐ 0R- ☐ - ☐																															
	N4GB ☐ 0R- ☐ - ☐																															
	N3GB ☐ 0R- ☐ - ☐																															
	N3GB ☐ 0R- ☐ - ☐																															
Valve block with masking plate (page 402)	N4GB ☐ R-MP- ☐																															
	N4GB ☐ R-MPS- ☐																															
	N4GB ☐ R-MPD- ☐																															
Air supply spacer (page 410)	4G1R-P- ☐																															
	4G2R-P- ☐																															
Exhaust spacer (Refer to page 412)	4G2R-R- ☐																															
In-stop valve spacer (page 414)	4G2R-IS																															
Mixed block (Refer to page 405)	N4G12R-MIX																															
Supply and exhaust block (page 404)	N4G ☐ R-Q ☐ - ☐																															
	N4G ☐ R-Q ☐ - ☐																															
	N4G ☐ R-Q ☐ - ☐																															
Partition block (page 405)	N4G ☐ R-S ☐																															
	N4G ☐ R-S ☐																															
	N4G ☐ R-S ☐																															
End block (page 405)	N4G ☐ R-E ☐																															
	N4G ☐ R-E ☐																															

Mounting rail	Blanking plug						Silencer				Included parts
L_2 = ☐ * Write an integer multiple of 12.5. (How to determine the length: page 427)	PG-P2-B		GWP☐-B		GWP☐-B		SLW-H☐		SLW-H☐		
	GWP☐-B		GWP☐-B								
	Cable with D-sub-connector		4GR-CABLE-D0☐-☐				Push-in fitting tube remover (included as standard) ☐ Not required (check the box)				

Common terminal block (T10/T11) wiring specifications sheet

* Fill in and attach to the manifold specifications sheet for anything other than the standard wiring or double wiring. (Available as made to order)
* Not required with standard wiring/double wiring.

Connector pin No.		Valve No.																							
T10 ☐	**T11** ☐	1	2	3	4	5	6	7	8	9	10	11	12	13	14	15	16	17	18	19	20	21	22	23	24
1	1																								
2	2																								
3	3																								
4	4																								
5	5																								
6	6																								
7	7																								
8	8																								
9	9																								
10	10																								
11	11																								
12	12																								
13	13																								
14	14																								
15	15																								
16	16																								
COM	17																								
COM	18																								
	19																								
	20																								
	21																								
	22																								
	23																								
	24																								
	COM																								
	COM																								

D-sub-connector (T30) wiring specifications sheet

* Fill in and attach to the manifold specifications sheet for anything other than the standard wiring or double wiring. (Available as made to order)
* Not required with standard wiring/double wiring.

Connector pin No.	Valve No.																								
T30 ☐	1	2	3	4	5	6	7	8	9	10	11	12	13	14	15	16	17	18	19	20	21	22	23	24
1																								
14																								
2																								
15																								
3																								
16																								
4																								
17																								
5																								
18																								
6																								
19																								
7																								
20																								
8																								
21																								
9																								
22																								
10																								
23																								
11																								
24																								
12																								
25																								
13 (COM)																								

Flat cable connector (T50/T51/T52/T53) wiring specifications sheet

* Fill in and attach to the manifold specifications sheet for anything other than the standard wiring or double wiring. (Available as made to order)
* Not required with standard wiring/double wiring.

Connector pin No.				Valve No.																							
T50 ☐	**T51** ☐	**T52** ☐	**T53** ☐	1	2	3	4	5	6	7	8	9	10	11	12	13	14	15	16	17	18	19	20	21	22	23	24
1	1	1	1																								
2	2	2	2																								
3	3	3	3																								
4	4	4	4																								
5	5	5	5																								
6	6	6	6																								
7	7	7	7																								
8	8	8	8																								
9 - power supply	9	9 COM	9																								
10 + (COM) power supply	10	10 COM	10																								
11	11		11																								
12	12		12																								
13	13		13																								
14	14		14																								
15	15		15																								
16	16		16																								
17	17		17																								
18	18		18																								
19 - power supply	19 COM		19																								
20 + (COM) power supply	20 COM		20																								
			21																								
			22																								
			23																								
			24																								
			25 COM																								
			26 COM																								

* Note that when the wiring method is T50/T50R, the COM polarity will be + (positive).

Serial transmission (T6G1/T7*) wiring specifications sheet

* Fill in and attach to the manifold specifications sheet for anything other than the standard wiring or double wiring. (Available as made to order)
* Not required with standard wiring/double wiring.

Serial transmission	Connector pin No.		Valve No.															
	T6G1	**T7***	1	2	3	4	5	6	7	8	9	10	11	12	13	14	15	16
Connector type T6G1: CC-Link 16 points	1	1																
	2	2																
	3	3																
	4	4																
	5	5																
	6	6																
	7	7																
	8	8																
	9	9																
	10 COM	10																
	11	11																
	12	12																
Thin slot-insertion type T7D1: DeviceNet 16 points T7G1: CC-Link 16 points T7L1: SAVE NET 16 points T7S1: CompoNet 16 points (NPN) T7SP1: CompoNet 16 points (PNP)	13	13																
	14	14																
	15	15																
	16	16																
	17	17																
	18	18																
	19	19																
	20 COM	20																

Serial transmission (T8*) wiring specifications sheet

* Fill in and attach to the manifold specifications sheet for anything other than the standard wiring or double wiring. (Available as made to order)
* Not required with standard wiring/double wiring.

Serial transmission			
T8G1	CC-Link	NPN	16 points
T8G2			32 points
T8GP1		PNP	16 points
T8GP2			32 points
T8P1	PROFIBUS-DP	NPN	16 points
T8P2			32 points
T8PP1		PNP	16 points
T8PP2			32 points
T8EC1	EtherCAT	NPN	16 points
T8EC2			32 points
T8ECP1		PNP	16 points
T8ECP2			32 points
T8EN1	EtherNet/IP	NPN	16 points
T8EN2			32 points
T8ENP1		PNP	16 points
T8ENP2			32 points
T8D1	DeviceNet	NPN	16 points
T8D2			32 points
T8DP1		PNP	16 points
T8DP2			32 points
T8EB1	CC-Link IEF Basic	NPN	16 points
T8EB2			32 points
T8EBP1		PNP	16 points
T8EBP2			32 points
T8EP1	PROFINET	NPN	16 points
T8EP2			32 points
T8EPP1		PNP	16 points
T8EPP2			32 points

Connector pin No.	Valve No.																							
T8*	1	2	3	4	5	6	7	8	9	10	11	12	13	14	15	16	17	18	19	20	21	22	23	24
1																								
2																								
3																								
4																								
5																								
6																								
7																								
8																								
9																								
10																								
11																								
12																								
13																								
14																								
15																								
16																								
17																								
18																								
19																								
20																								
21																								
22																								
23																								
24																								
25																								
26																								
27																								
28																								
29																								
30																								
31																								
32																								

MEMO

MEMO

4GD1 to 3/4GE1 to 3

Pilot operated 3, 5-port valve

Metal base

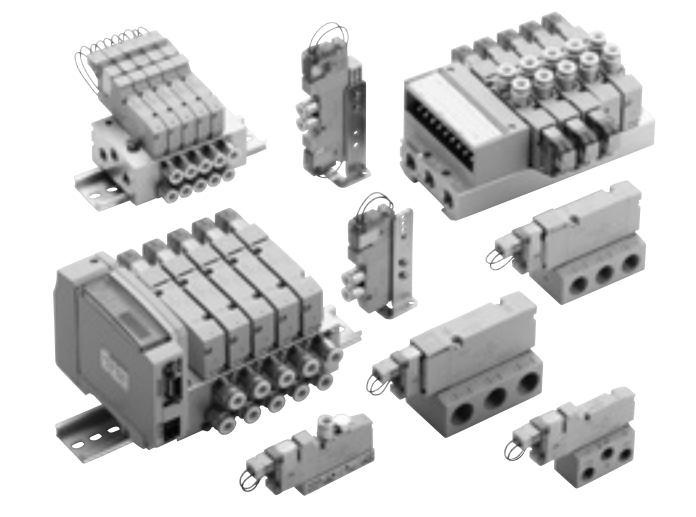

CONTENTS

Series variation	438
Electrical connections list (wire connections/circuit)	441
Product introduction	2
Discrete valve	
● Body piping (3GD1 to 3/4GD1 to 3)	442
● Base piping (4GE1 to 3)	482
Individual wiring manifold	
● Body piping (M3GD1 to 3/M4GD1 to 3)	508
● Base piping (M4GE1 to 3)	520
Reduced wiring manifold	
● Body piping (M3GD1 to 3-T*(D) / M4GD1 to 3-T*(D))	
· Common terminal block/D sub-connector/flat cable connector/Serial transmission	534
● Base piping (M4GE1 to 3-T*(D))	
· Common terminal block/D sub-connector/flat cable connector/Serial transmission	554
Related products (in-stop valve spacer/air supply spacer/ exhaust spacer/pilot check valve/silencer/plug/DIN rail)	576
Manifold specifications sheet	592
Technical data	
(1) Notes on wiring	815
(2) Exhaust check valve	851
(3) How to expand reduced wiring manifolds	836
(4) Pneumatic system selection guide	844
⚠Safety precautions	850

Series variation

4GD1 to 3/4GE1 to 3 Series

* Refer to page 609 for block manifold.

Series external appearance						Model No.	Position Number of solenoids JIS symbol	Valve performance: Flow characteristic C [dm³/(s·bar)] *1	Valve performance: Applicable cylinder bore size (ø)	Voltage (V)
Single unit	3GD110R-E* 4GD120R-E* 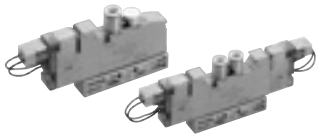	Body piping	3-port			3GD1	● 3-port valve 2-position single NC 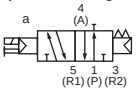	0.66 to 0.70	20 to 40	100 AC 200 AC 24 DC 12 DC (*2)
						3GD2		2.2 to 2.7	40 to 80	
						3GD3		3.9	63 to 100	
			5-port			4GD1		0.66 to 0.70	20 to 40	
						4GD2		2.4 to 2.7	40 to 80	
						4GD3		3.2 to 4.0	63 to 100	
	4GE310R-E* 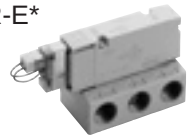	Base piping	3-port			3GE1	2-position single NO 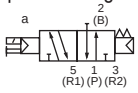	1.0	20 to 40	
						3GE2		2.1	40 to 80	
			5-port			4GE1		1.1 to 1.3	20 to 40	
						4GE2		2.2 to 2.5	40 to 80	
						4GE3		3.2 to 4.2	63 to 100	
Individual wiring manifold	M4GD280R-E*D  M4GE110R-E*D  M4GE280R-B 	Body piping	· Direct mount · DIN rail mount (-D)			M4GD1	● 5-port valve 2-position single 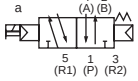	0.66 to 1.0	20 to 40	100 AC 200 AC 24 DC 12 DC (*2)
						M4GD2		1.7 to 2.5	40 to 80	
						M4GD3		2.5 to 3.3	63 to 100	
		Base piping	· Direct mount · DIN rail mount (-D)			M4GE1		0.67 to 1.0	20 to 40	
						M4GE2		1.6 to 2.4	40 to 80	
						M4GE3		2.6 to 3.3	63 to 100	
Reduced wiring manifold	M4GD280R-T10 	Body piping	Direct mount	Terminal (-T1□) Connector (-T30, T5□)		M4GD1	2-position double 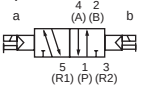	0.66 to 1.0	20 to 40	24 DC 12 DC
						M4GD2		1.7 to 2.5	40 to 80	
						M4GD3		2.5 to 3.3	63 to 100	
				Serial transmission (-T8□)		M4GD1	3-position all ports closed 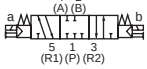	0.66 to 1.0	20 to 40	24 DC
						M4GD2		1.7 to 2.5	40 to 80	
						M4GD3		2.5 to 3.3	63 to 100	
	M4GD180R-T8* 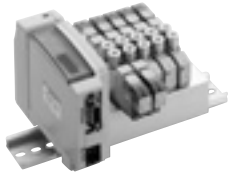		Mount DIN rail	Terminal (-T1□D) Connector (-T30D, T5□D)		M4GD1	3-position A/B/R connection 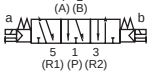	0.66 to 1.0	20 to 40	24 DC 12 DC
						M4GD2		1.7 to 2.5	40 to 80	
						M4GD3		2.5 to 3.3	63 to 100	
				Serial transmission (-T6G1) (-T8□D)		M4GD1	3-position P/A/B connection 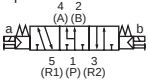	0.66 to 1.0	20 to 40	24 DC
						M4GD2		1.7 to 2.5	40 to 80	
						M4GD3		2.5 to 3.3	63 to 100	
	M4GE180R-T8* 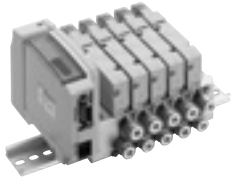	Base piping	Direct mount	Terminal (-T1□) Connector (-T30, T5□)		M4GE1		0.67 to 1.0	20 to 40	24 DC 12 DC
						M4GE2		1.6 to 2.4	40 to 80	
						M4GE3		2.6 to 3.3	63 to 100	
				Serial transmission (-T8□)		M4GE1	● Two 3-port valves integrated NC/NC 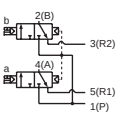	0.66 to 1.0	20 to 40	24 DC
						M4GE2		1.7 to 2.5	40 to 80	
						M4GE3		2.5 to 3.3	63 to 100	
			Mount DIN rail	Terminal block (-T1□D) Connector (-T30D, T5□D)		M4GE1		0.67 to 1.0	20 to 40	24 DC 12 DC
						M4GE2		1.6 to 2.4	40 to 80	
						M4GE3		2.6 to 3.3	63 to 100	
				Serial transmission (-T6G1) (-T8□D)		M4GE1		0.67 to 1.0	20 to 40	24 DC
						M4GE2		1.6 to 2.4	40 to 80	
						M4GE3		2.6 to 3.3	63 to 100	

*1: Effective cross-sectional area S and sonic conductance C are converted as S ≈ 5.0 x C.
*2: The grommet lead wire specifications are for DC voltages only.
*3: The two 3-port valves integrated is compatible with 3GD1/2 and 3GE1/2.
*4: P/R piping port is either M5 or Rc thread.
*5: Only compatible with the base piping 2-position single model.
*6: Specifications for reduced wiring equipped manifolds. Only 12/24 VDC is supported.

Switching position									A/B Piping port (*4)																Electrical connections											Selection page
2-position				3-position					Push-in fitting				Push-in L-fitting (upward) (*5)				Push-in L-fitting (downward)				Female thread				Single unit, individual wiring				Reduced wiring							
Normally closed	Normally open	Single	Double	All ports closed	ABR connection	PAB connection	Two 3-port valves integrated (*3)	Mix	ø4	ø6	ø8	ø10	ø4	ø6	ø8	ø10	ø4	ø6	ø8	ø10	M5	Rc1/8	Rc1/4	Rc3/8	Grommet lead (*2)	E-connector	EJ-connector	DIN terminal box	A-connector (*6)	Common terminal block	D-sub-connector	Flat cable, power supply	Flat cable, no power supply	Serial transmission	Serial transmission	
									C4	C6	C8	C10	CL4	CL6	CL8	CL10	CD4	CD6	CD8	CD10	M5	06	08	10	Blank	E□	EJ□	B□	A2N	T1□	T30	T50	T5□	T6G1	T8□	
●	●						●		●	●											●				●	●	●									442
●	●						●		●	●	●											●			●	●	●	●								
●	●									●	●	●											●		●	●	●	●								
		●	●	●	●	●			●	●											●				●	●	●								
		●	●	●	●	●			●	●	●											●			●	●	●	●								
		●	●	●	●	●				●	●	●											●		●	●	●	●								
							●															●			●	●	●									482
							●																●			●	●	●	●								
		●	●	●	●	●																●			●	●	●								
		●	●	●	●	●																	●		●	●	●	●								
		●	●	●	●	●																	●	●	●	●	●	●								
●	●	●	●	●	●	●	●	●	●	●											●				●	●	●								508
●	●	●	●	●	●	●	●	●	●	●	●											●			●	●	●	●								
●	●	●	●	●	●	●		●		●	●	●											●		●	●	●	●								
		●	●	●	●	●	●	●	●	●			●	●			●	●			●				●	●	●									520
		●	●	●	●	●	●	●	●	●	●			●	●			●	●			●			●	●	●	●								
		●	●	●	●	●	●			●	●	●			●	●			●	●			●		●	●	●	●								
●	●	●	●	●	●	●	●	●	●	●											●							●	●	●	●	●			534
●	●	●	●	●	●	●	●	●	●	●	●											●							●	●	●	●	●		
●	●	●	●	●	●	●		●		●	●	●											●							●	●	●	●	●		
●	●	●	●	●	●	●	●	●	●	●											●							●					●		
●	●	●	●	●	●	●	●	●	●	●	●											●							●					●		
●	●	●	●	●	●	●		●		●	●	●											●							●					●		
		●	●	●	●	●	●	●	●	●			●	●			●	●			●									●	●	●	●			534
		●	●	●	●	●	●	●	●	●	●			●	●			●	●			●								●	●	●	●		
		●	●	●	●	●	●			●	●	●			●	●			●	●			●								●	●	●	●		
		●	●	●	●	●	●	●	●	●			●	●			●	●			●									●	●	●	●			554
		●	●	●	●	●	●	●	●	●	●			●	●			●	●			●								●	●	●	●		
		●	●	●	●	●	●			●	●	●			●	●			●	●			●								●	●	●	●		
		●	●	●	●	●	●	●	●	●			●	●			●	●			●									●	●	●	●			554
		●	●	●	●	●	●	●	●	●	●			●	●			●	●			●								●	●	●	●		
		●	●	●	●	●	●			●	●	●			●	●			●	●			●								●	●	●	●		
		●	●	●	●	●	●	●	●	●			●	●			●	●			●									●	●	●	●			554
		●	●	●	●	●	●	●	●	●	●			●	●			●	●			●								●	●	●	●		
		●	●	●	●	●	●			●	●	●			●	●			●	●			●								●	●	●	●		

Electrical connections

Discrete valve/individual wiring manifold

Blank Grommet lead wire Ⓐ

● **Lead wire length**
300 mm

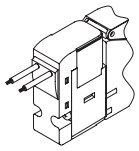

E0 E-connector Ⓐ

● **Lead wire length**
300 mm
500 mm
1000 mm
2000 mm
3000 mm

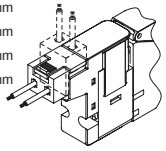

E0N E-connector without socket

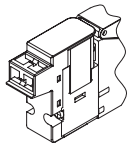

E1 E-connector with socket/terminal

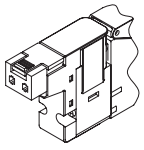

E2 E-connector ⒶⒷⒸ

● **Lead wire length**
300 mm
500 mm
1000 mm
2000 mm
3000 mm

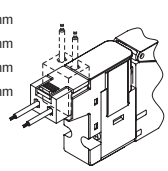

E2N E-connector without socket ⒷⒸ

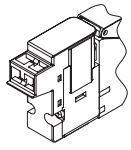

E3 E-connector with socket/terminal ⒷⒸ

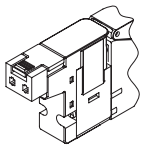

A2N A-connector downward without socket

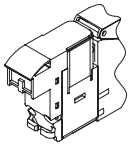

● For 100 VAC, ⓐ dimension is 3.5 mm longer than 12/24 VDC.

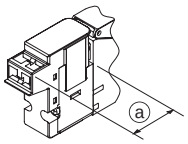

B DIN terminal box
BN (BN: without terminal box)

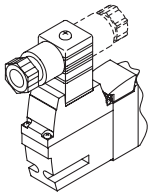

E2*J EJ-connector Ⓐ

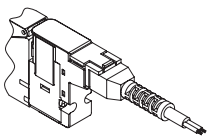

E2*JN EJ-connector ⒶⒷⒸ

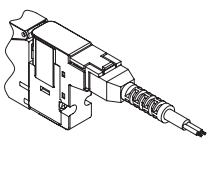

Reduced wiring manifold

T10 **T11** Common terminal block (left side) M3 thread specifications/ push tightening specifications

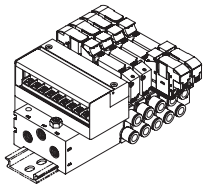

T10R **T11R** Common terminal block (right side) M3 thread specifications/ push tightening specifications

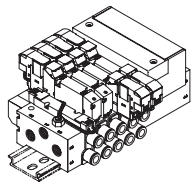

T30 D-sub-connector (left)

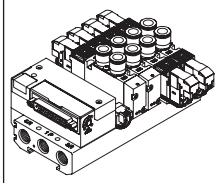

T30R D-sub-connector (right)

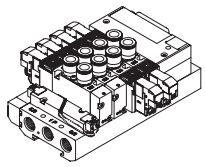

T50 Flat cable with power supply terminal (left side)

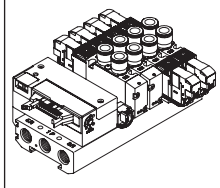

T50R Flat cable with power supply terminal (right side)

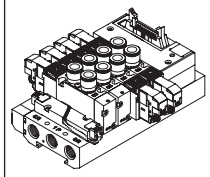

T51 **T52** **T53** Flat cable without power supply terminal (left side)

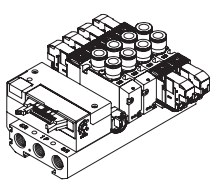

T51R **T52R** **T53R** Flat cable without power supply terminal (right side)

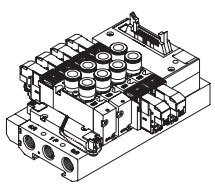

T6G1 Serial transmission

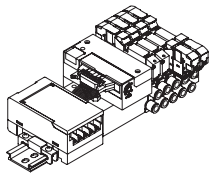

T8*½ Serial transmission (thin)

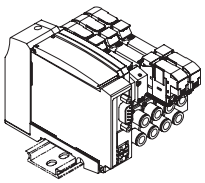

ⒶWith lead wire
ⒷWith indicator lamp
ⒸWith surge suppressor

Manual override

Blank Non-locking/locking common

(Standard equipment)

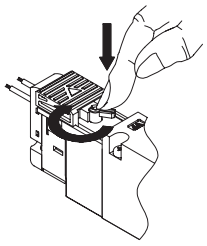

(1) For non-locking, push to turn ON, release to turn OFF

(2) For locking, push and turn 90° clockwise to hold the ON state. Turn counterclockwise to release OFF

Other options

H With exhaust check valve

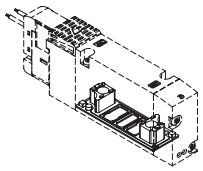

Standard for pilot exhaust

P Mounting plate

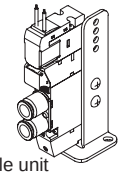

Single unit
(only body piping)

A Ozone/coolant proof product

Select for coolant inflow and ozone measures.

F A/B port filter integrated

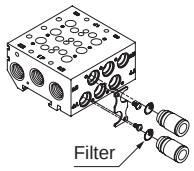

Pilot check valve (separate)

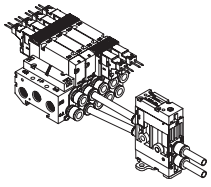

Electric connection circuit diagram

Other options	
Z1 Z3	Air supply spacer/ exhaust spacer
	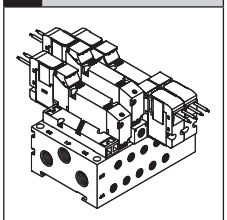
Z2	In-stop valve spacer
	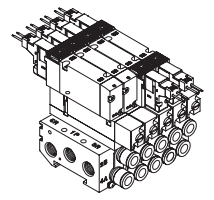
Z6	Spacer pilot check valve
	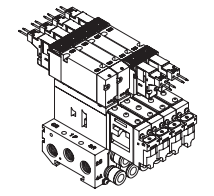
D	DIN rail mount
	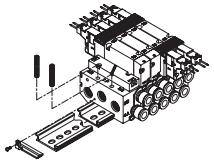

Electrical connections		Without lead wire	With lead wire	With indicator lamp	With surge suppressor	Without socket	Circuit diagram
Blank	Grommet lead wire		●				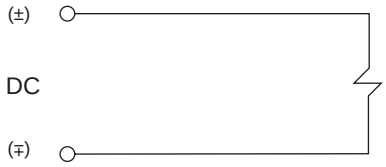
E0	E-connector		●				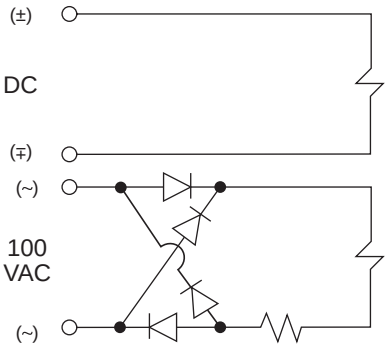
E0*J	EJ-connector		●				
E0N	E-connector					●	
E1	E-connector	●					
E2	E-connector		●	●	●		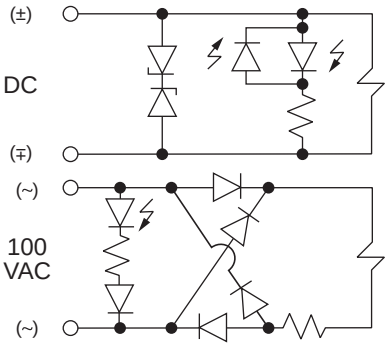
E2*J	EJ-connector		●	●	●		
E2N	E-connector			●	●	●	
E3	E-connector	●		●	●		
A2N	A-connector			●	●	●	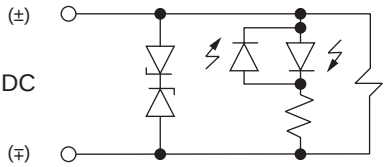
B	DIN terminal box	●		●	●		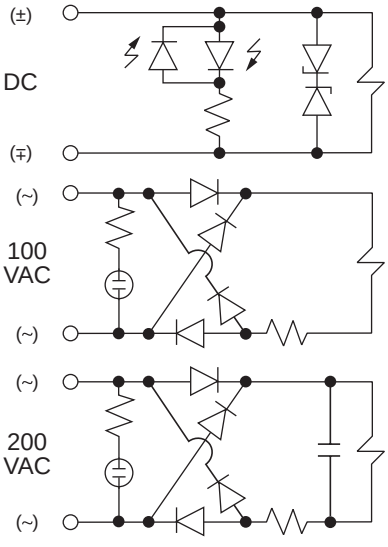
BN	DIN terminal box (without terminal box)	●			●		

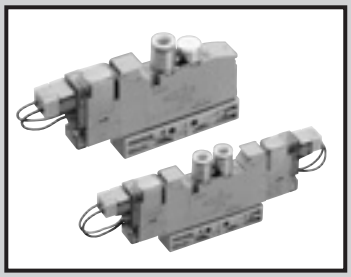

Discrete valve
Body piping

3GD1/2/3 / 4GD1/2/3 Series

● Cylinder bore size: ø20 to ø100

JIS symbol

● 3-port valve
2-position single NC

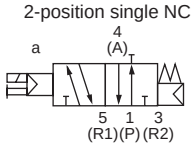

2-position single NO

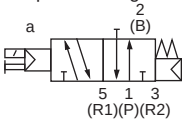

● Two 3-port valves integrated
(A side valve: NC, B side valve: NC)

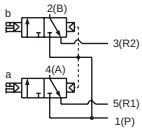

● 5-port valve
2-position single

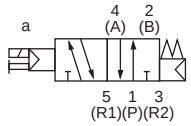

2-position double

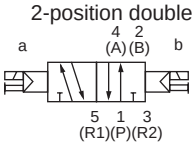

3-position all ports closed

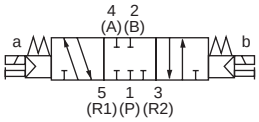

3-position A/B/R connection

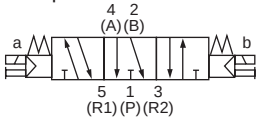

3-position P/A/B connection

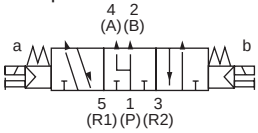

Common specifications

Item	Description
Valve and operation	Pilot operated soft spool valve
Working fluid	Compressed air
Max. working pressure MPa	0.7 (≈100 psi, 7 bar)
Min. working pressure MPa	0.2 (≈29 psi, 2 bar)
Proof pressure MPa	1.05 (≈150 psi, 10.5 bar)
Ambient temperature °C	-5 (23°F) to 55 (131°F) (no freezing)
Fluid temperature °C	5 (41°F) to 55 (131°F)
Manual override	Non-locking/locking common type
Pilot exhaust method	Main valve/pilot valve common exhaust type
Lubrication (*1)	Not required
Degree of protection (*2)	Dust-proof
Vibration resistance m/s^2	50 or less
Shock resistance m/s^2	300 or less
Atmosphere	Cannot be used in corrosive gas environments

*1: Use turbine oil Class 1 ISO VG32 for lubrication. Excessive or intermittent lubrication results in unstable operation.
*2: Avoid water drops or oil, etc., during use. IP65 (jet-proof) applies for DIN terminal box specifications. However, the specified outer diameter of the applicable cord and tightening torque must be used for fixing in place.

Electrical specifications

Item	Description			
Rated voltage V	24 DC	12 DC	100 AC	200 AC
V fluctuation range	±10%			
Holding current A (*3)	0.015 (0.017)	0.030 (0.034)	0.009 (0.009)	0.006 (0.006)
Power consumption W (*3)	0.35(0.40)		-	
Apparent power VA (*3) (*4)	-		0.93 (0.98)	1.40
Thermal class	B			
Surge suppressor	Option			
Indicator	Lamp (option)			

*3: Values in ( ) apply when lamp is included.
*4: 200 VAC is the value of DIN terminal box (with lamp).

Individual specifications

Item		3GD1	3GD2	3GD3	4GD1	4GD2	4GD3
Port size	A/B port	Push-in fitting ø4, ø6 M5	Push-in fitting ø4, ø6, ø8 Rc1/8	Push-in fitting ø6, ø8, ø10 Rc1/4	Push -in fitting ø4, ø6 M5	Push-in fitting ø4, ø6, ø8 Rc1/8	Push-in fitting ø6, ø8, ø10 Rc1/4
	P/R1/R2 port	M5	Rc1/8	Rc1/4	M5	Rc1/8	Rc1/4

Performance/characteristics by model

Item			3GD1		3GD2		3GD3		4GD1		4GD2		4GD3	
			ON	OFF	ON	OFF	ON	OFF	ON	OFF	ON	OFF	ON	OFF
Response time ms	Two 3-port valves integrated		12	15	15	30	-	-	-	-	-	-	-	-
	2-position	Single	15	25	20	30	25	40	15	25	20	30	25	40
		Double	-	-	-	-	-	-	15	-	20	-	25	-
	3-position	ABR connection	-	-	-	-	-	-	20	30	25	35	35	50

Values with lamp/surge suppressor are shown. The response time is the value with supply pressure of 0.5 MPa at 20°C without lubrication. It depends on the pressure and the lubricant quality.

Weight

Item				3GD1	3GD2	3GD3	4GD1	4GD2	4GD3
Weight g	2-position	Single	Grommet lead wire	48(41)	110(80)	144(102)	48(41)	115(85)	153(111)
			E-connector	50(43)	112(82)	146(104)	50(43)	117(87)	155(113)
			DIN terminal box	-	147(117)	178(136)	-	152(122)	187(145)
		Double	Grommet lead wire	-	-	-	65(58)	133(103)	175(129)
			E-connector	-	-	-	69(62)	137(107)	179(133)
			DIN terminal box	-	-	-	-	176(146)	215(169)
	3-position	All ports closed	Grommet lead wire	-	-	-	67(60)	145(115)	184(142)
			E-connector	-	-	-	71(64)	149(119)	188(146)
			DIN terminal box	-	-	-	-	188(158)	224(182)

・Values in ( ) do not include the pipe adaptor. Values for the E-connector include the socket assembly (with 300 mm lead wire). Weight for EJ-connector is E-connectortoAdd 16 g/pc.
・The weight of the two 3-port valves integrated type is the same as that of 2-position double.

Flow characteristics

Model No.	Solenoid position		P → A/B		A/B→R1/R2	
			C[dm³ /(s·bar)]	b	C[dm³ /(s·bar)]	b
3GD1 4GD1	Two 3-port valves integrated		0.98	0.45	0.71	0.34
	2-position		1.2	0.47	0.72	0.37
	3-position	All ports closed	1.1	0.39	0.70	0.34
		ABR connection	1.1	0.33	0.72	0.34
		PAB connection	1.3	0.61	0.72	0.36
3GD2 4GD2	Two 3-port valves integrated		1.8	0.29	2.3	0.32
	2-position		2.4	0.33	2.8	0.30
	3-position	All ports closed	2.2	0.28	2.5	0.28
		ABR connection	2.3	0.26	2.8	0.27
		PAB connection	2.5	0.38	2.4	0.30
3GD3 4GD3	2-position		3.4	0.29	4.0	0.24
	3-position	All ports closed	3.1	0.27	3.4	0.28
		ABR connection	3.1	0.33	4.1	0.20
		PAB connection	3.5	0.43	3.4	0.32

*1 : Effective cross-sectional area S and sonic conductance C are converted as S ≈ 5.0 x C.

Ozone-proof specifications ・ Coolant proof specifications

Can be selected with “How to order” Item Ⓔ option “A” on page 444.

Specifications for rechargeable battery (Catalog No. CC-1226A)

● For use in the rechargeable battery manufacturing process, materials used for air path and sliding section are limited

** - Voltage - **P4**

CE marking specifications

** - Voltage - **ST**

・Standard voltage of 24 VDC or less is CE marking-compatible even if the model No. is not indicated with "ST".

3GD1/2/3 / 4GD1/2/3 Series

Discrete valve; body piping

How to order

4GD1 1 0 R - C6 - E2 - 1

3GD1 1 0 R - C6 - E2 - 1

● Discrete valve for mounting base

4GD1 1 9 R - C6 - E2 H - 3

● Discrete 3-port valve for mounting base

3GD1 1 9 R - C6 - E2 H C - 3

Ⓐ Model No.
Ⓑ Solenoid position
Ⓒ Port size
Ⓓ Electrical connections
Refer to page 441 for the circuit diagram with surge suppressor/ lamp.
Ⓔ Option
Ⓕ Pilot exhaust method
Ⓖ Voltage

Code	Description	Ⓐ Model No. 3GD1	3GD2	3GD3	4GD1	4GD2	4GD3
Ⓑ Solenoid position							
1	2-position single				●	●	●
2	2-position double				●	●	●
3	3-position all ports closed				●	●	●
4	3-position ABR connection				●	●	●
5	3-position PAB connection				●	●	●
1	2-position single: normally closed (*1)	●	●	●			
11	2-position single: normally open (*1)	●	●	●			
66	Two 3-port valves integrated (*2) — A side valve: Normally closed / B side valve: Normally closed	●	●				
Ⓒ Port size							
Port	4(A)/2(B) port	P/R1/R2 port (1) = M5, (2) = Rc1/8, (3) = Rc1/4					
C4	ø4 push-in fitting	(1)	(2)		(1)	(2)	
C6	ø6 Push-in fitting	(1)	(2)	(3)	(1)	(2)	(3)
C8	ø8 Push-in fitting		(2)	(3)		(2)	(3)
C10	ø10 Push-in fitting			(3)			(3)
M5	M5	(1)			(1)		
06	Rc1/8		(2)			(2)	
08	Rc1/4			(3)			(3)
Ⓓ Electrical connections							
	Refer to the electrical connection list on next page.						
Ⓔ Option							
Blank	Non-locking/locking common manual override	●	●	●	●	●	●
H	With exhaust check valve (*3)	●	●	●	●	●	●
P	With mounting plate	●	●	●	●	●	●
A	Ozone/coolant proof	●	●	●	●	●	●
F	A/B-port filter built in (*4)	●	●	●	●	●	●
Ⓕ Pilot exhaust method							
Blank	Common exhaust (pilot exhaust check valve built-in)	●	●	●	●	●	●
C	Atmosphere release	○	○	○	○	○	○
Ⓖ Voltage							
1	100 VAC (rectifier integrated)	●	●	●	●	●	●
2	200 VAC (rectifier integrated) (*5)		●	●		●	●
3	24 VDC	●	●	●	●	●	●
4	12 VDC	●	●	●	●	●	●

is not available.
○ indicates a custom order.

⚠ Precautions for model No. selection

*1: For the 3GD normally closed, the piping connection 2 (B) and 3 (R2) ports are plugged. For 3GD normally open type, avoid plugging the 5 (R1) port. Otherwise, malfunctions may result.
*2: Dimensions are the same as the respective 2-position double solenoid.
*3: 3-position all ports closed and PAB connection are not provided with the exhaust check valve.
Refer to page 851 for details on the exhaust check valve.
*4: A filter is built into the P-port as standard.
*5: DIN terminal box only is supported.

[Electrical connections list]

Ⓓ Electrical connections		Ⓐ Model No. 3GD1	3GD2	3GD3	4GD1	4GD2	4GD3
Blank	Grommet lead wire (300 mm) (*6)	●	●	●	●	●	●
B	DIN terminal box (Pg7) with surge suppressor/lamp (*7) (*9)		●	●		●	●
BN	DIN terminal box (Pg7) (without terminal box) with surge suppressor (*7) (*9)		●	●		●	●
E-connector (upward/lateral common)							
E0	Lead wire (300 mm) (*8)	●	●	●	●	●	●
E00	Lead wire (500 mm) (*8)	●	●	●	●	●	●
E01	Lead wire (1000 mm) (*8)	●	●	●	●	●	●
E02	Lead wire (2000 mm) (*8)	●	●	●	●	●	●
E03	Lead wire (3000 mm) (*8)	●	●	●	●	●	●
E0N	Without lead wire (without socket) (*8)	●	●	●	●	●	●
E1	Without lead wire (socket/terminal attached) (*8)	●	●	●	●	●	●
E2	Lead wire (300 mm), surge suppressor/indicator lamp	●	●	●	●	●	●
E20	Lead wire (500 mm), surge suppressor/indicator lamp	●	●	●	●	●	●
E21	Lead wire (1000 mm), surge suppressor/indicator lamp	●	●	●	●	●	●
E22	Lead wire (2000 mm), surge suppressor/indicator lamp	●	●	●	●	●	●
E23	Lead wire (3000 mm), surge suppressor/indicator lamp	●	●	●	●	●	●
E2N	No lead wire (without socket), surge suppressor/indicator lamp	●	●	●	●	●	●
E3	No lead wire (with socket/terminal), surge suppressor/indicator lamp	●	●	●	●	●	●
EJ type connector (socket with cover, upward/lateral common)							
E01J	Lead wire (1000 mm) (*8)	●	●	●	●	●	●
E02J	Lead wire (2000 mm) (*8)	●	●	●	●	●	●
E03J	Lead wire (3000 mm) (*8)	●	●	●	●	●	●
E21J	Lead wire (1000 mm), surge suppressor/indicator lamp	●	●	●	●	●	●
E22J	Lead wire (2000 mm), surge suppressor/indicator lamp	●	●	●	●	●	●
E23J	Lead wire (3000 mm), surge suppressor/indicator lamp	●	●	●	●	●	●

*6: Grommet lead wire specifications are compatible with DC voltage only.
*7: A lamp comes with the terminal box.
*8: AC voltage is with a rectifier circuit.
*9: The terminal box conforms to EN175301-803 Type C (former DIN 43650-C).
Refer to pages 856 and 857 for details.

Electrical connections

Discrete valve/individual wiring manifold

Blank Grommet lead wire

● **Lead wire length**
300 mm

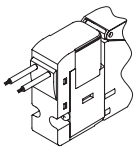

E1 E3 E-connector with socket/terminal

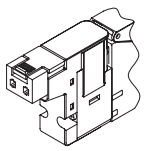

E0 E2 E-connector

● **Lead wire length**
300 mm
500 mm
1000 mm
2000 mm
3000 mm

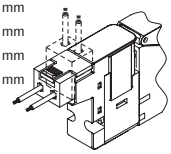

B DIN terminal box

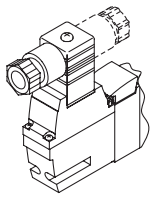

E0N E2N E-connector without socket

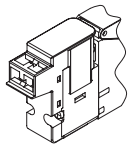

BN DIN terminal box without terminal box

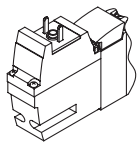

E0*J E2*J EJ type connector

● **Lead wire length**
1 m
2 m
3 m

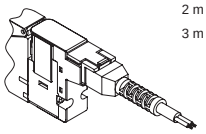

Internal structure and parts list

3GD110R

● 2-position single: Normally closed
Grommet lead wire (blank)

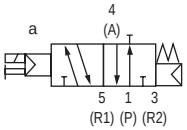

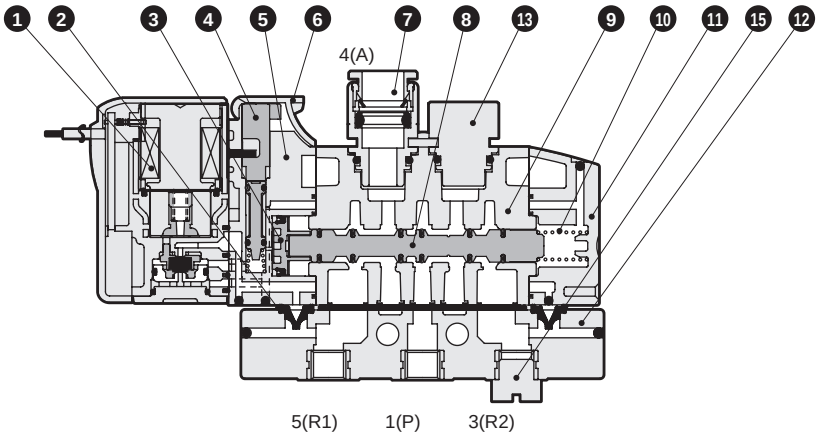

3GD1110R

● 2-position single: Normally open
Grommet lead wire (blank)

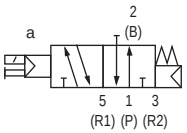

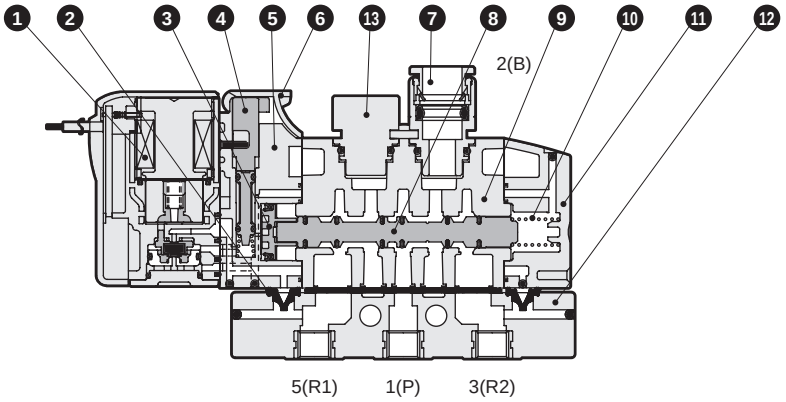

3GD1660R

● Two 3-port valves integrated
Grommet lead wire (blank)
A side valve: Normally closed,
B side valve: Normally closed

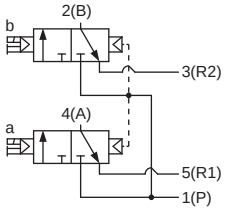

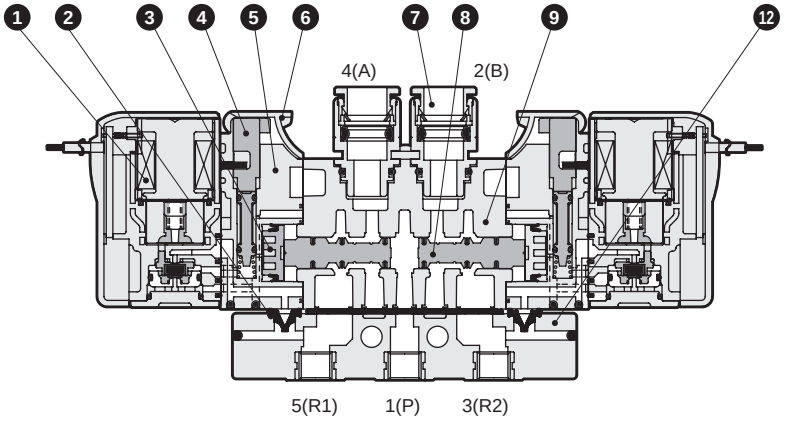

Main parts list

No.	Part name	Material
1	Coil assembly	-
2	Pilot exhaust check valve	Hydrogenated nitrile rubber
3	Piston D assembly	-
4	Manual override	Resin
5	Piston chamber	Resin
6	Manual protection cover	Resin
7	Cartridge push-in fitting	-
8	Spool assembly	-
9	Body	Aluminum alloy die-casting
10	Spool spring	Stainless steel
11	Cap	Resin
12	Pipe adaptor	Resin
13	Plug cartridge	Aluminum
15	M5 plug	Copper alloy + nickel plating

Parts list

No.	Part name		Model No.
1	Coil assembly		4GR - electrical connections - □ - COIL - voltage Blank: Standard A: Ozone specifications Blank: Grommet lead wire
7	Cartridge push-in fitting and related parts	ø4 straight	4G1R-JOINT-C4
		ø6 straight	4G1R-JOINT-C6
		Plug cartridge	4G1R-JOINT-CPG

Internal structure and parts list

4GD110R

● 2-position single
Grommet lead wire (blank)

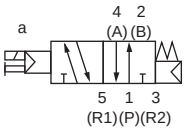

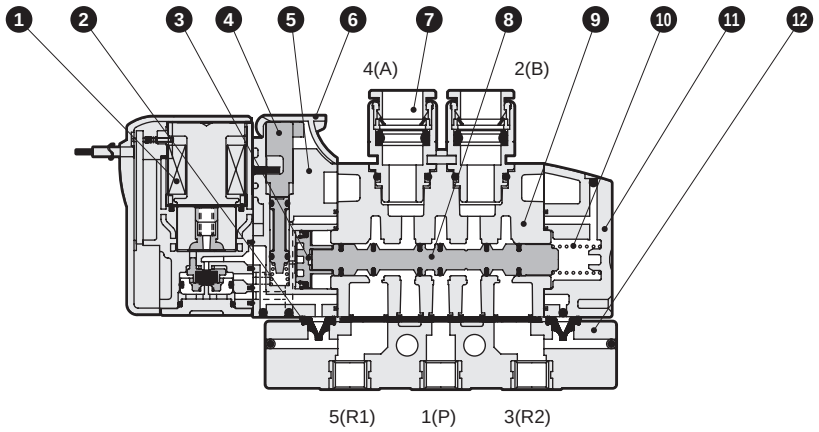

4GD120R

● 2-position double
Grommet lead wire (blank)

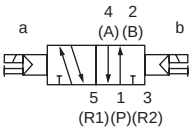

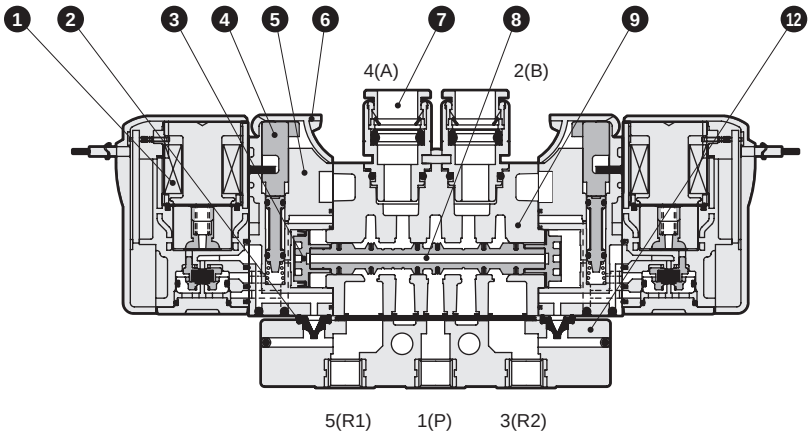

4GD1$^{3}_{4}_{5}$0R

● 3-position
Grommet lead wire (blank)

All ports closed

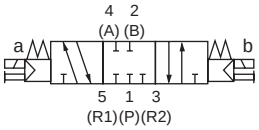

A/B/R connection

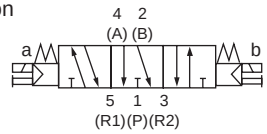

P/A/B connection

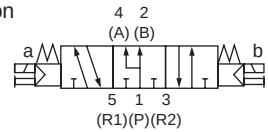

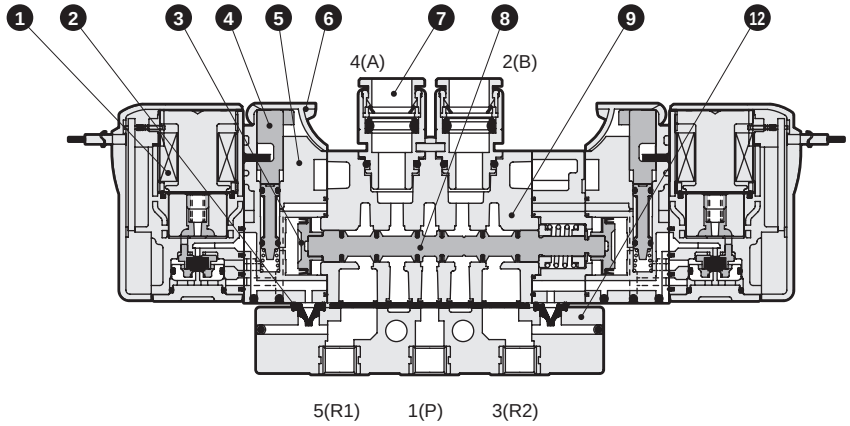

Main parts list

No.	Part name	Material
1	Coil assembly	-
2	Pilot exhaust check valve	Hydrogenated nitrile rubber
3	Piston D assembly	-
4	Manual override	Resin
5	Piston chamber	Resin
6	Manual protection cover	Resin
7	Cartridge push-in fitting	-
8	Spool assembly	-
9	Body	Aluminum alloy die-casting
10	Spool spring	Stainless steel
11	Cap	Resin
12	Pipe adaptor	Resin

Parts list

No.	Part name		Model No.
1	Coil assembly		4GR - electrical connections - □ - COIL - voltage Blank: Standard A: Ozone specifications Blank: Grommet lead wire
7	Cartridge push-in fitting and related parts	ø4 straight	4G1R-JOINT-C4
		ø6 straight	4G1R-JOINT-C6
		Plug cartridge	4G1R-JOINT-CPG

Internal structure and parts list

3GD210R/3GD310R

● 2-position single: Normally closed
Grommet lead wire (blank)

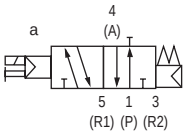

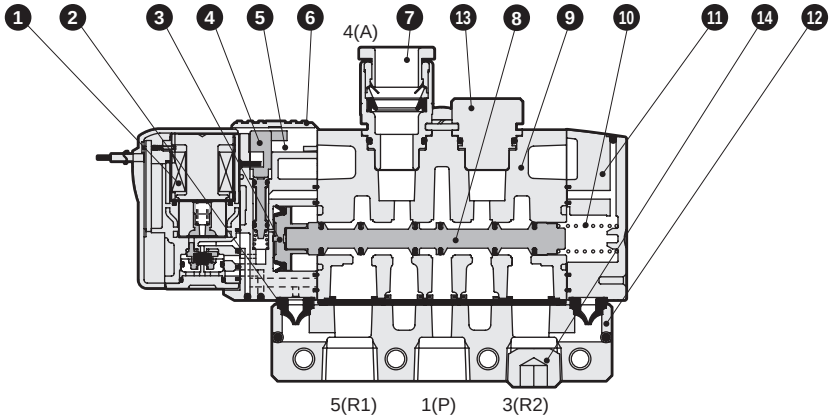

3GD2110R/3GD3110R

● 2-position single: Normally open
Grommet lead wire (blank)

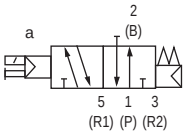

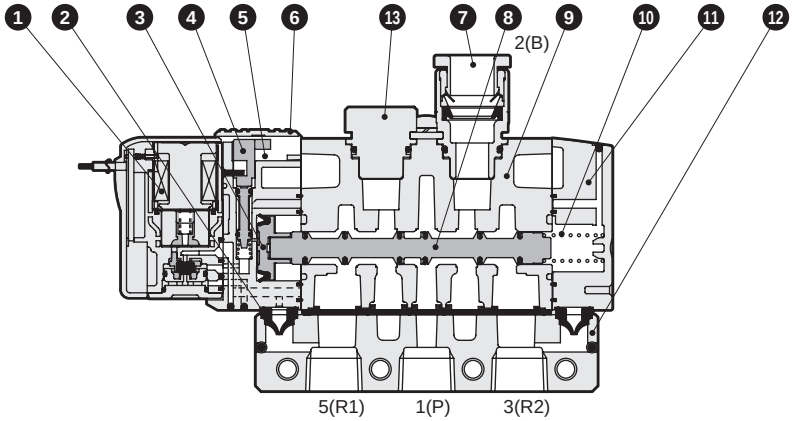

3GD2660R

● Two 3-port valves integrated
Grommet lead wire (blank)

A side valve: Normally closed,
B side valve: Normally closed

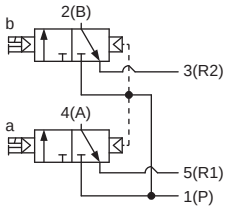

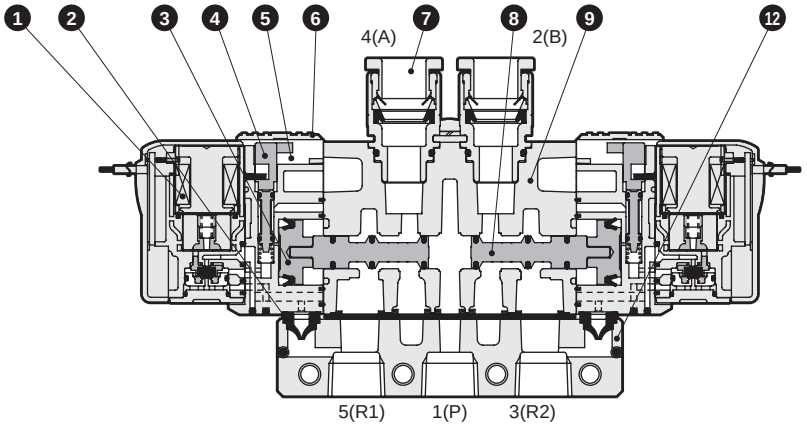

Main parts list

No.	Part name	Material
1	Coil assembly	-
2	Pilot exhaust check valve	Hydrogenated nitrile rubber
3	Piston assembly	-
4	Manual override	Resin
5	Piston chamber	Resin
6	Manual protection cover	Resin
7	Cartridge push-in fitting	-
8	Spool assembly	-
9	Body	Aluminum alloy die-casting
10	Spool spring	Stainless steel
11	Cap	Resin
12	Pipe adaptor	Aluminum alloy die-casting
13	Plug cartridge	Aluminum
14	Hexagon socket plug	Steel

Parts list

No.	Part name			Model No.
1	Coil assembly			4GR - electrical connections - □ - COIL - voltage Blank: Standard A: Ozone specifications Blank: Grommet lead wire
7	Cartridge push-in fitting and related parts	3G2	ø4 straight	4G2R-JOINT-C4
			ø6 straight	4G2R-JOINT-C6
			ø8 straight	4G2R-JOINT-C8
			Plug cartridge	4G2R-JOINT-CPG
		3G3	ø6 straight	4G3R-JOINT-C6
			ø8 straight	4G3R-JOINT-C8
			ø10 straight	4G3R-JOINT-C10
			Plug cartridge	4G3R-JOINT-CPG

Internal structure and parts list

4GD210R/4GD310R

● 2-position single
Grommet lead wire (blank)

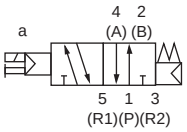

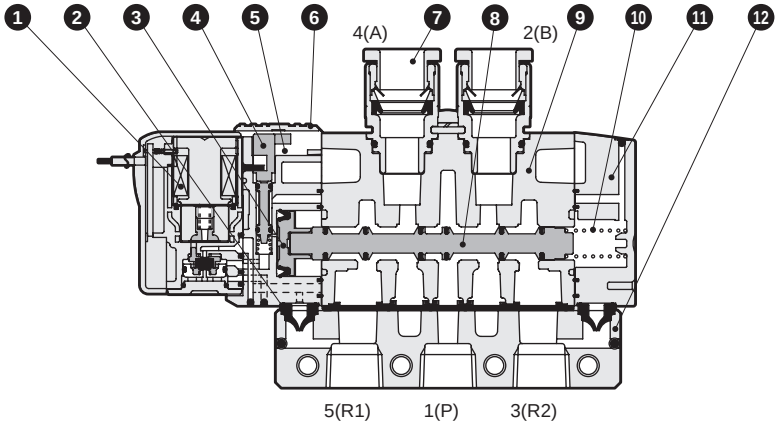

4GD220R/4GD320R

● 2-position double
Grommet lead wire (blank)

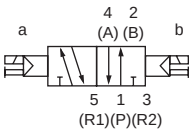

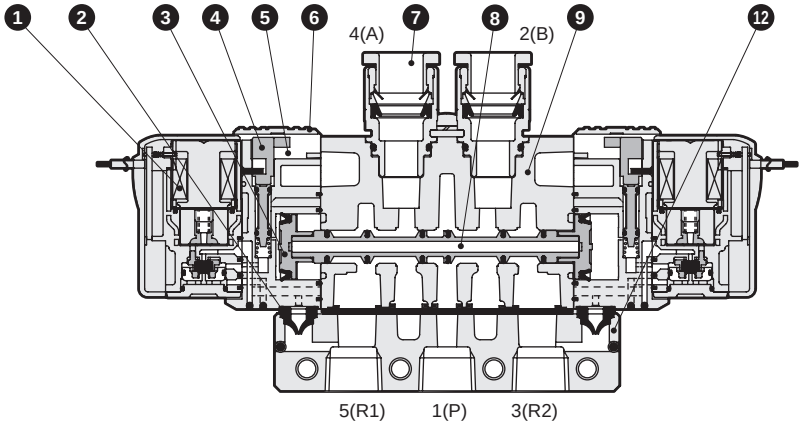

4GD2$^{3}_{5}$0R/4GD3$^{3}_{5}$0R

● 3-position
Grommet lead wire (blank)

All ports closed

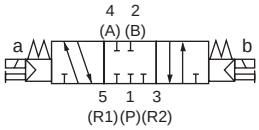

A/B/R connection

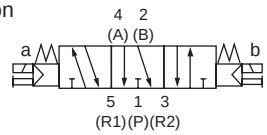

P/A/B connection

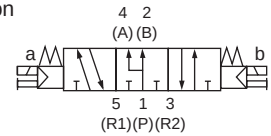

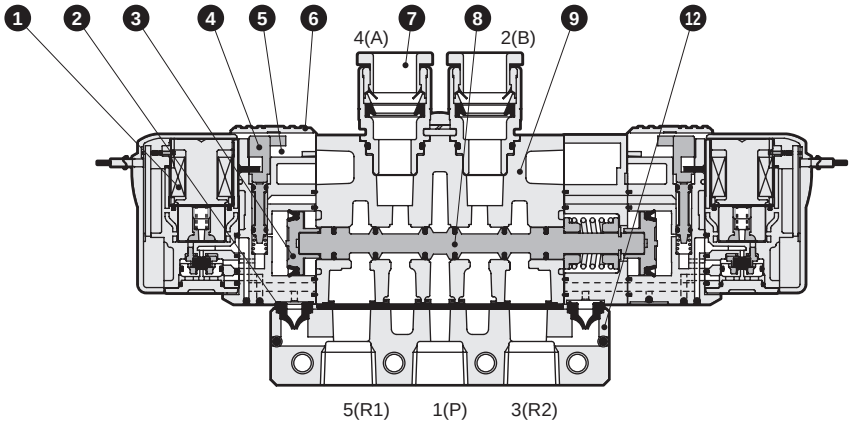

Main parts list

No.	Part name	Material
1	Coil assembly	-
2	Pilot exhaust check valve	Hydrogenated nitrile rubber
3	Piston D assembly	-
4	Manual override	Resin
5	Piston chamber	Resin
6	Manual protection cover	Resin
7	Cartridge push-in fitting	-
8	Spool assembly	-
9	Body	Aluminum alloy die-casting
10	Spool spring	Stainless steel
11	Cap	Resin
12	Pipe adaptor	Aluminum alloy die-casting

Parts list

No.	Part name			Model No.
1	Coil assembly			4GR - electrical connections - □ - COIL - voltage Blank: Standard A: Ozone specifications Blank: Grommet lead wire
7	Cartridge push-in fitting and related parts	4G2	ø4 straight	4G2R-JOINT-C4
			ø6 straight	4G2R-JOINT-C6
			ø8 straight	4G2R-JOINT-C8
		4G3	ø6 straight	4G3R-JOINT-C6
			ø8 straight	4G3R-JOINT-C8
			ø10 straight	4G3R-JOINT-C10

Internal structure and parts list (electrical connections section)

● E-connector E□□

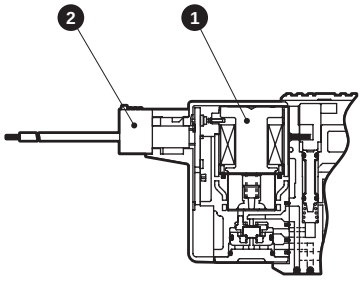

● EJ type connector E□□J

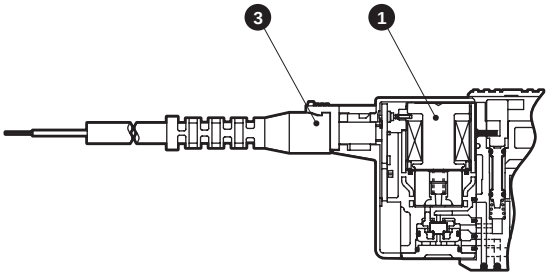

● DIN terminal box B

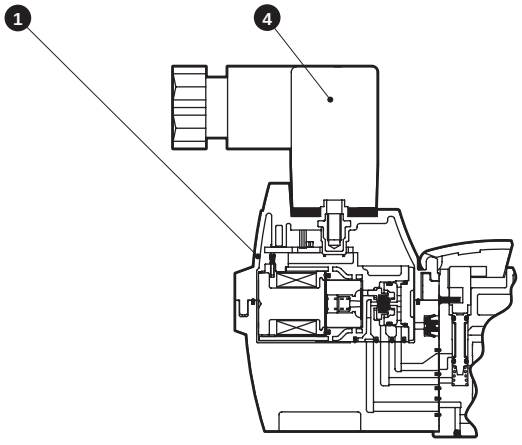

Main parts list

No.	Part name	Material
1	Coil assembly	
2	E-connector socket assembly	-
3	Socket assembly with cover	-
4	DIN terminal box assembly	-

Parts list

No.	Part name	Model No.
1	Coil assembly	4GR - [electrical connections] - □ - COIL - [voltage] Blank: Standard A: Ozone proof E* : E-connector E*J: Socket with cover type B* : DIN terminal box B includes the DIN terminal box BN does not include the DIN terminal box
2	E-connector socket assembly	4GR-SOCKET-ASSY-E**-[Voltage]
3	Socket assembly with cover	4GR-SOCKET-ASSY-E**J
4	DIN terminal box assembly	4GR-TERMINAL-BOX-[Voltage]

MEMO

Dimensions CAD

3GD110R

● 2-position single: Normally closed grommet lead wire (blank)

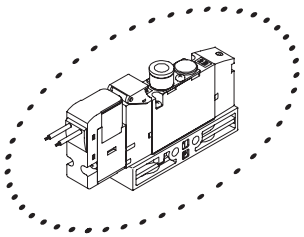

● Mounting plate (P)

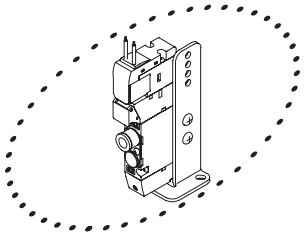

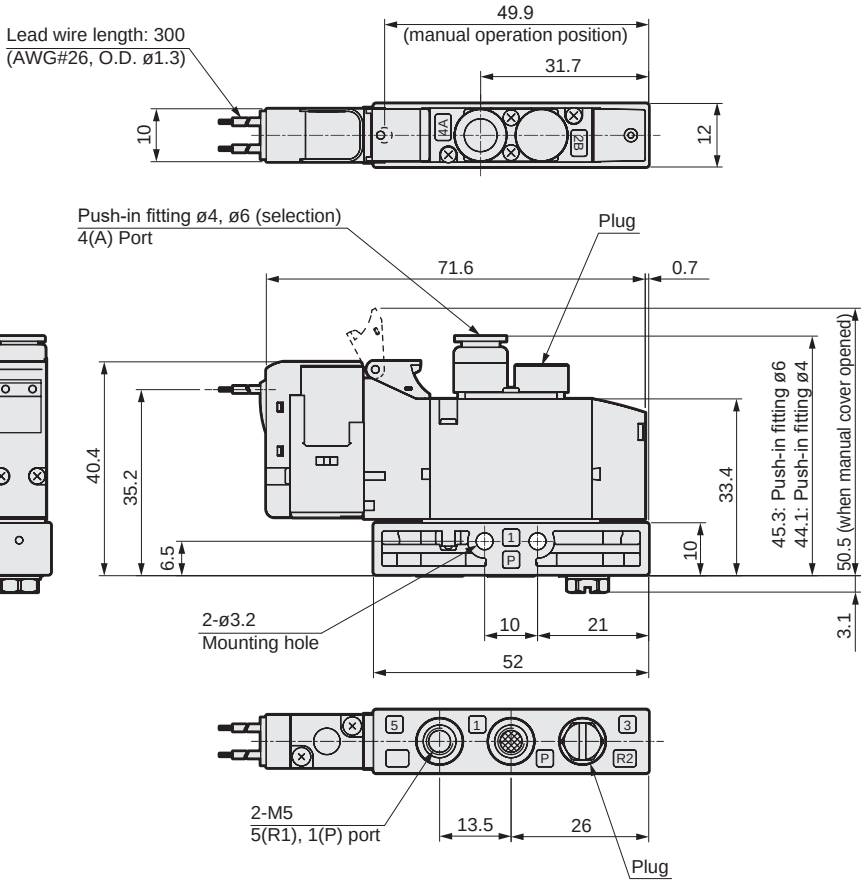

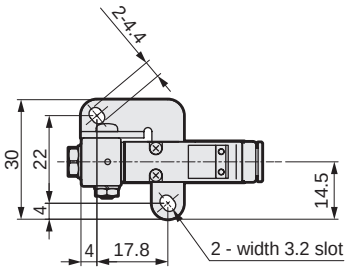

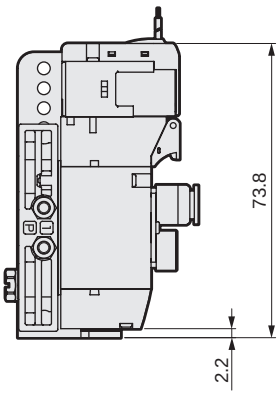

● M5 female thread (M5)

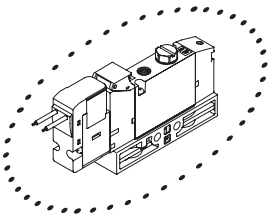

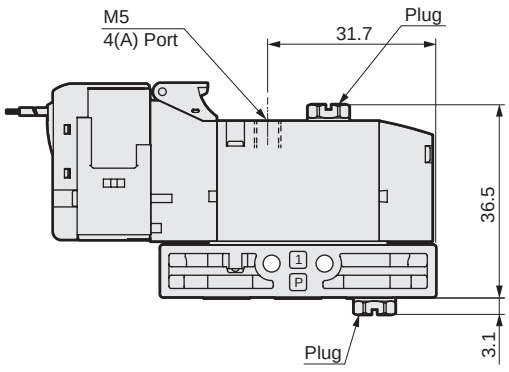

Dimensions

● E-connector (E)

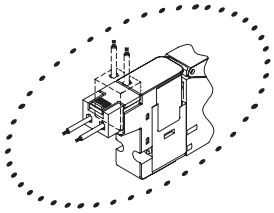

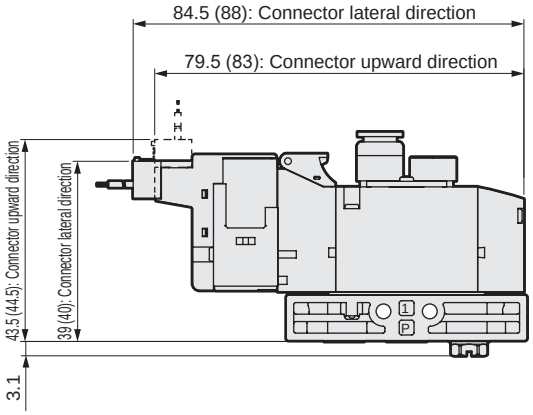

Note: Values in ( ) are for AC voltage.

● EJ type connector (E**J)

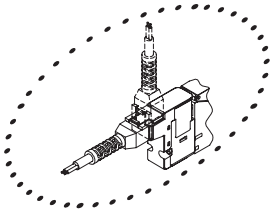

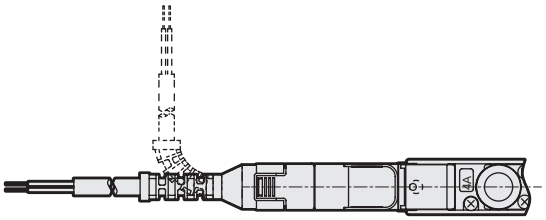

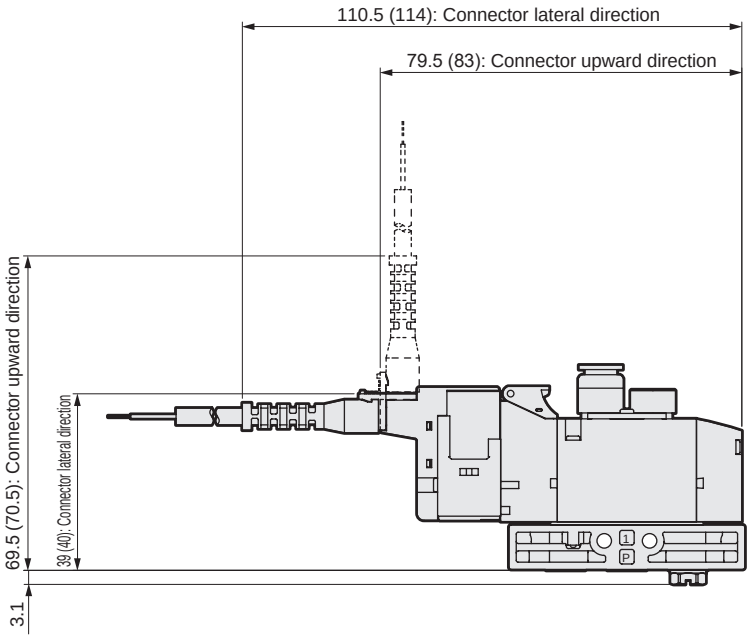

Note: Values in ( ) are for AC voltage.

Dimensions CAD

3GD1110R

● 2-position single: Normally open grommet lead wire (blank)

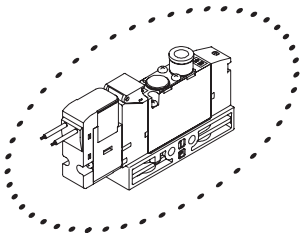

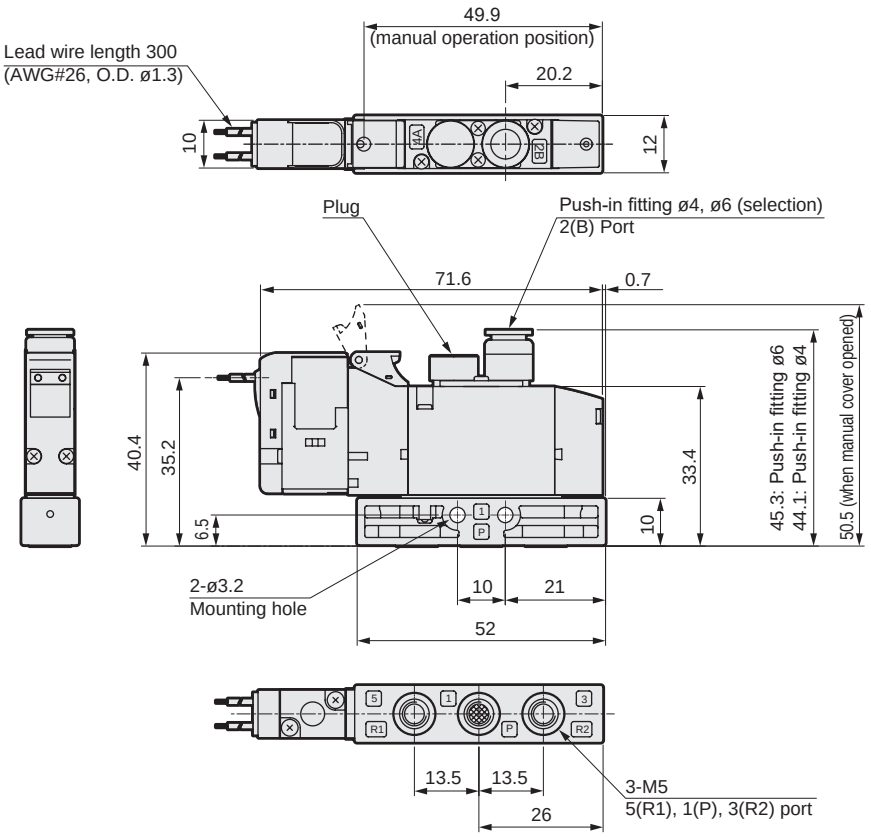

● Mounting plate (P)

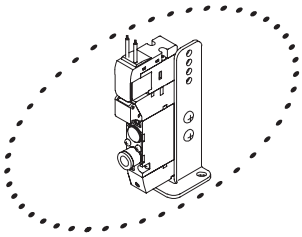

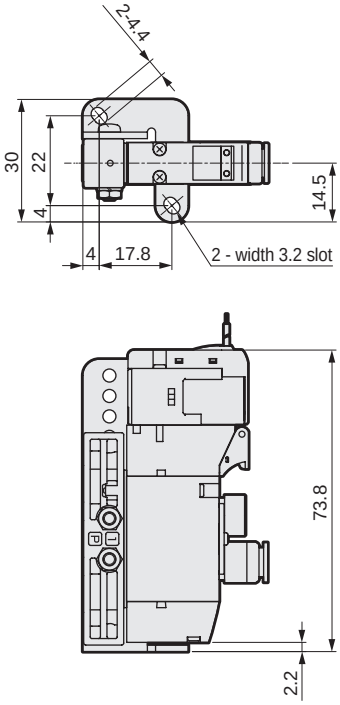

● M5 female thread (M5)

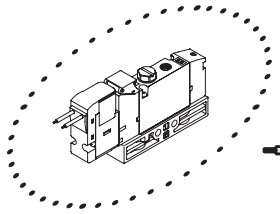

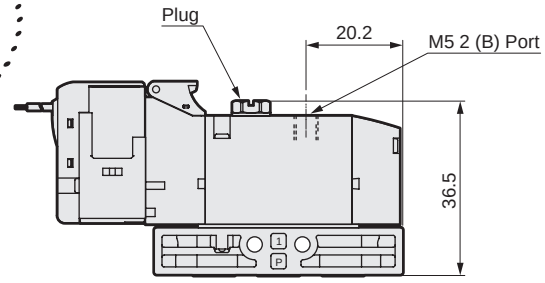

Dimensions

● E-connector (E)

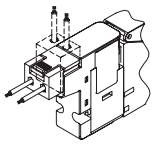

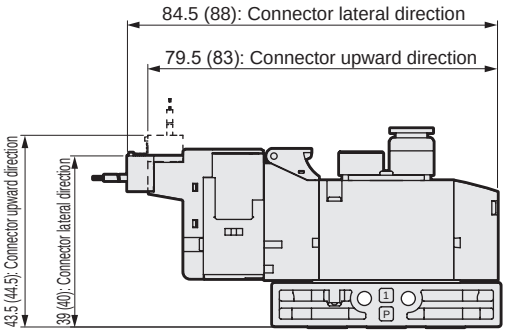

Note: Values in ( ) are for AC voltage.

● EJ type connector (E**J)

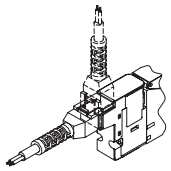

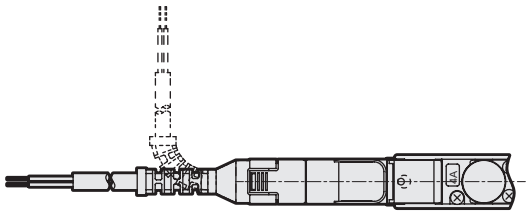

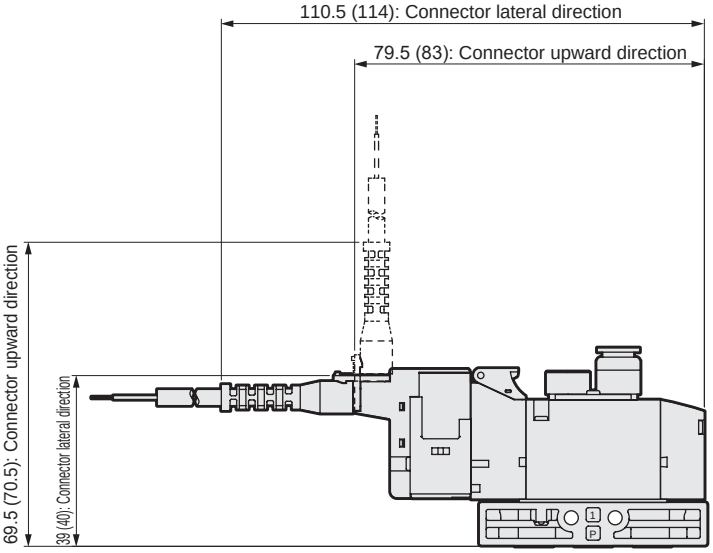

Note: Values in ( ) are for AC voltage.

Dimensions CAD

3GD210R

● 2-position single: Normally closed grommet lead wire (blank)

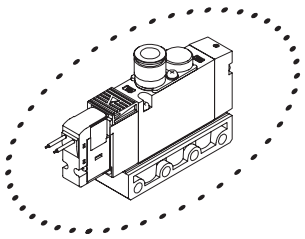

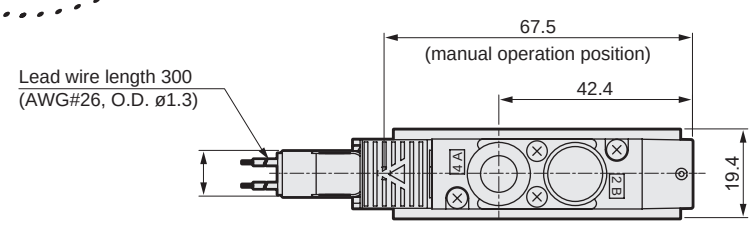

● Mounting plate (P)

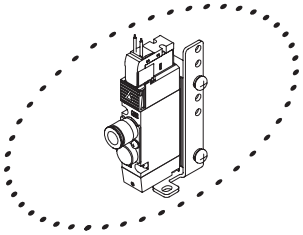

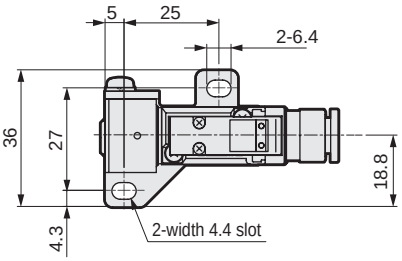

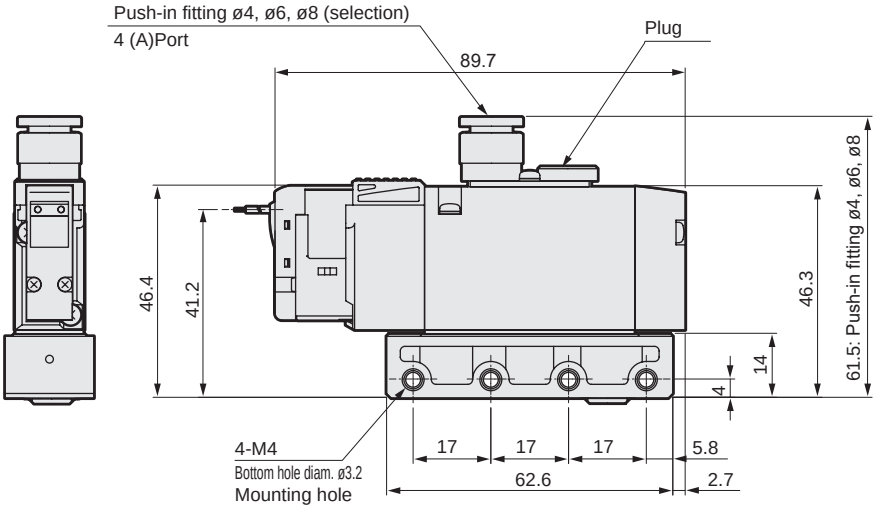

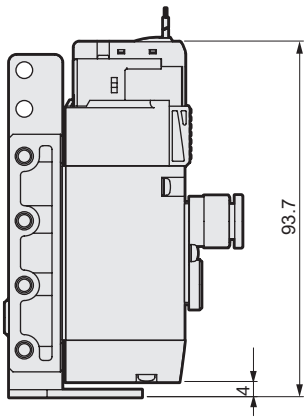

*Refer to page 853 for details on mounting holes

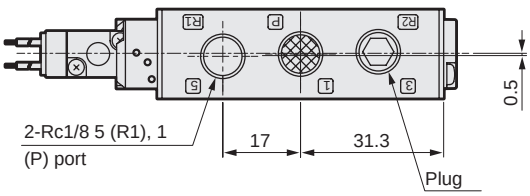

● Rc1/8 female thread (06)

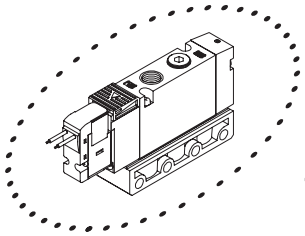

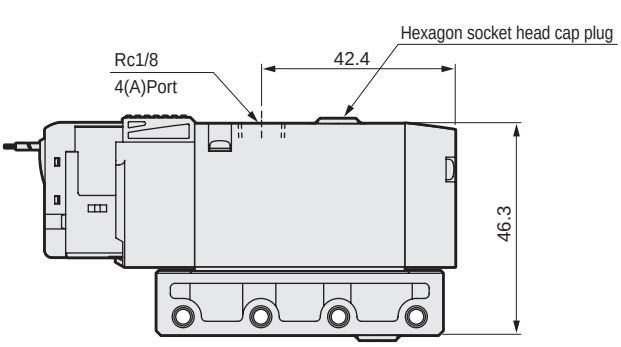

Dimensions

● E-connector (E)

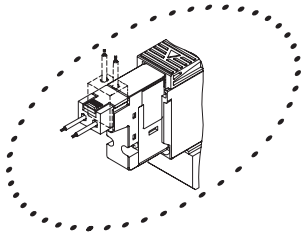

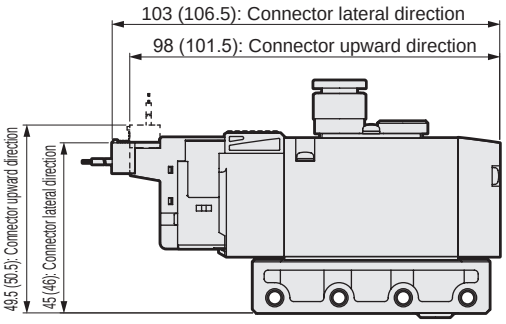

Note: Values in ( ) are for AC voltage.

● EJ type connector (E**J)

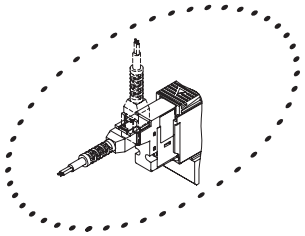

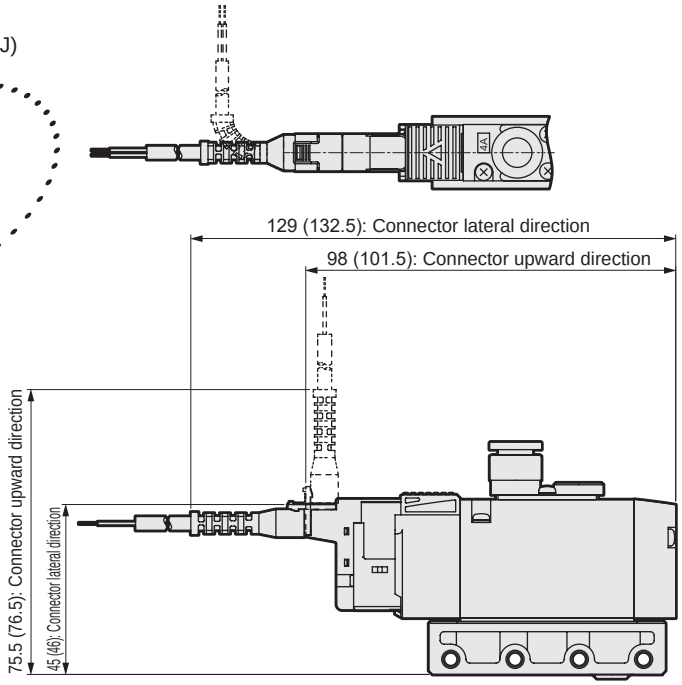

Note: Values in ( ) are for AC voltage.

● DIN terminal box (B)

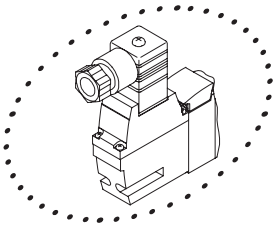

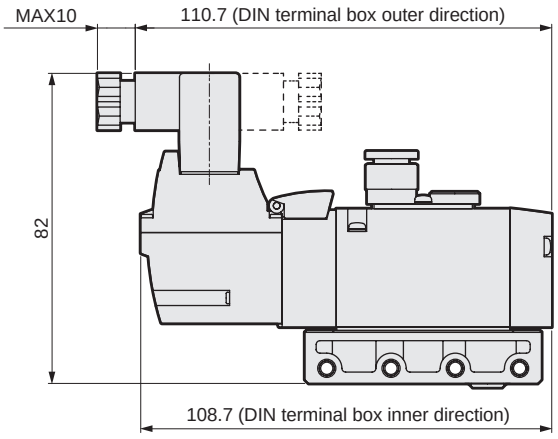

Note: DIN terminal box assembly is shipped facing inward.

Dimensions CAD

3GD2110R

● 2-position single: Normally open grommet lead wire (blank)

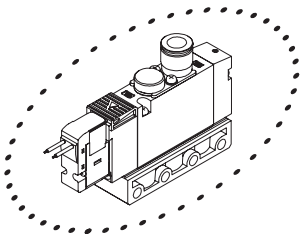

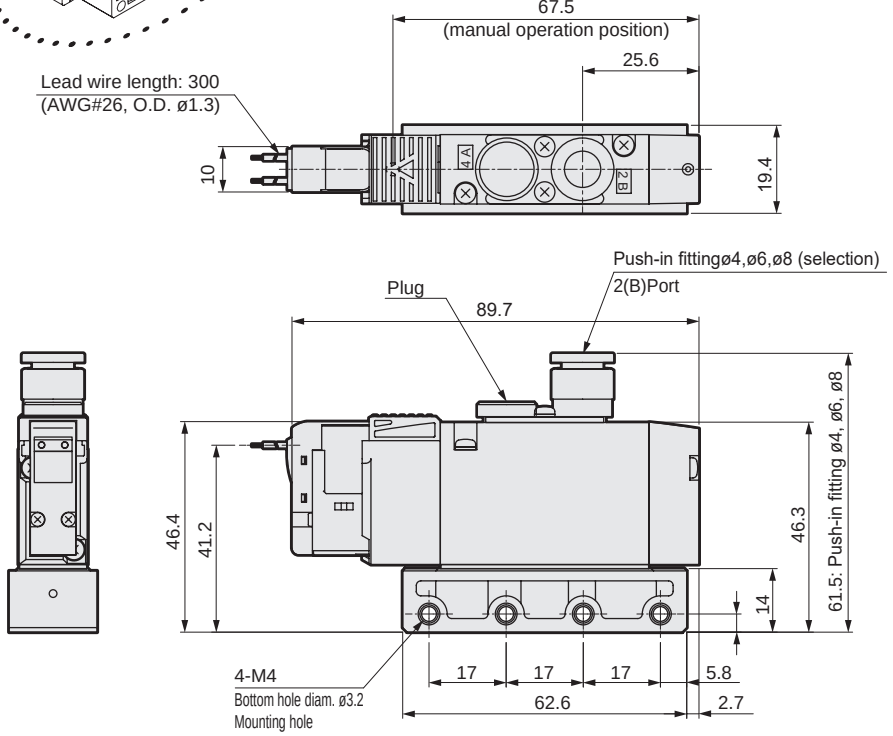

*Refer to page 853 for details on mounting holes.

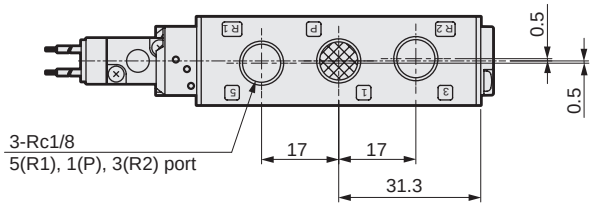

● Mounting plate (P)

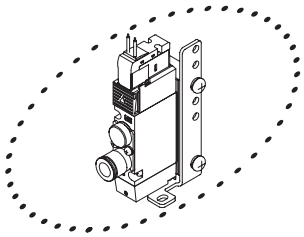

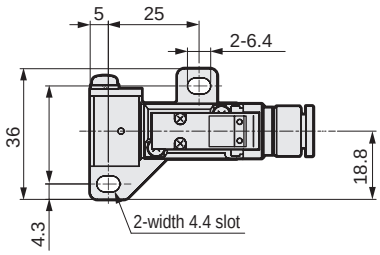

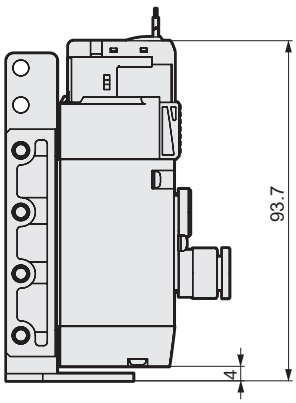

● Rc1/8 female thread (06)

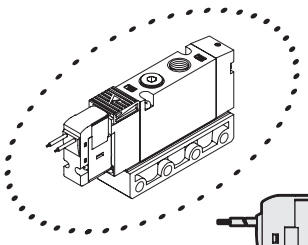

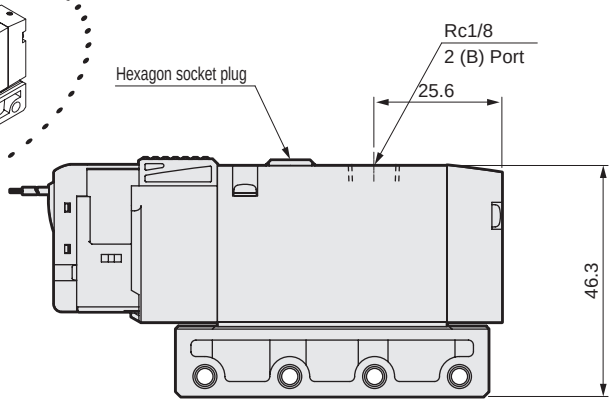

Dimensions

● E-connector (E)

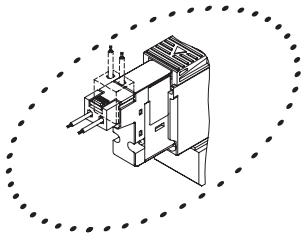

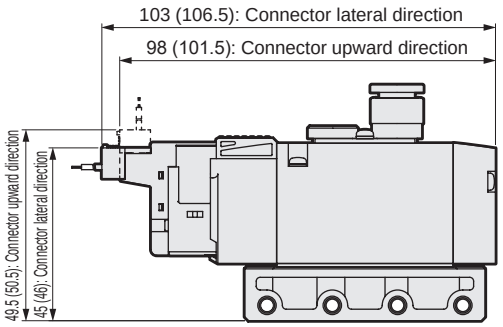

Note: Values in ( ) are for AC voltage.

● EJ type connector (E**J)

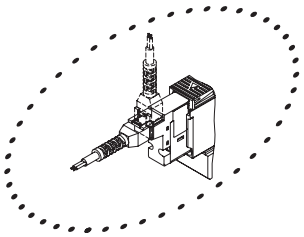

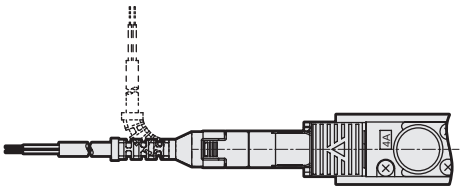

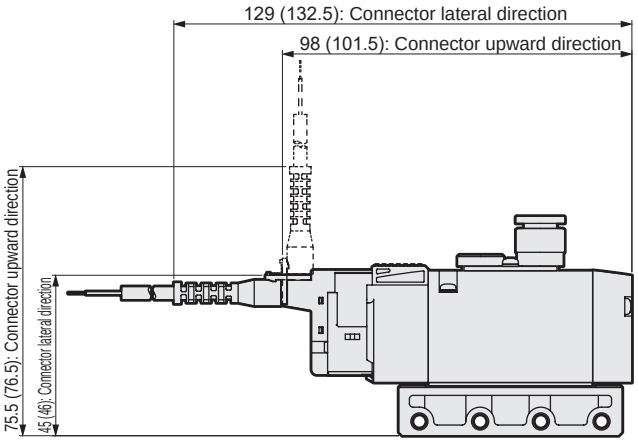

Note: Values in ( ) are for AC voltage.

● DIN terminal box (B)

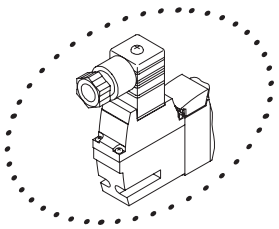

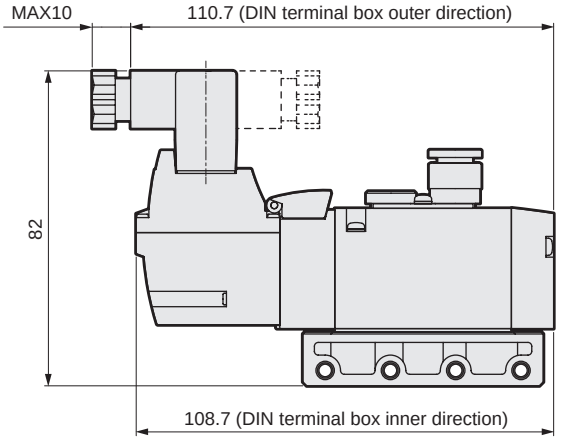

Note: DIN terminal box assembly is shipped facing inward.

Dimensions CAD

3GD310R

● 2-position single: Normally closed grommet lead wire (blank)

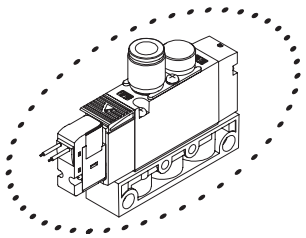

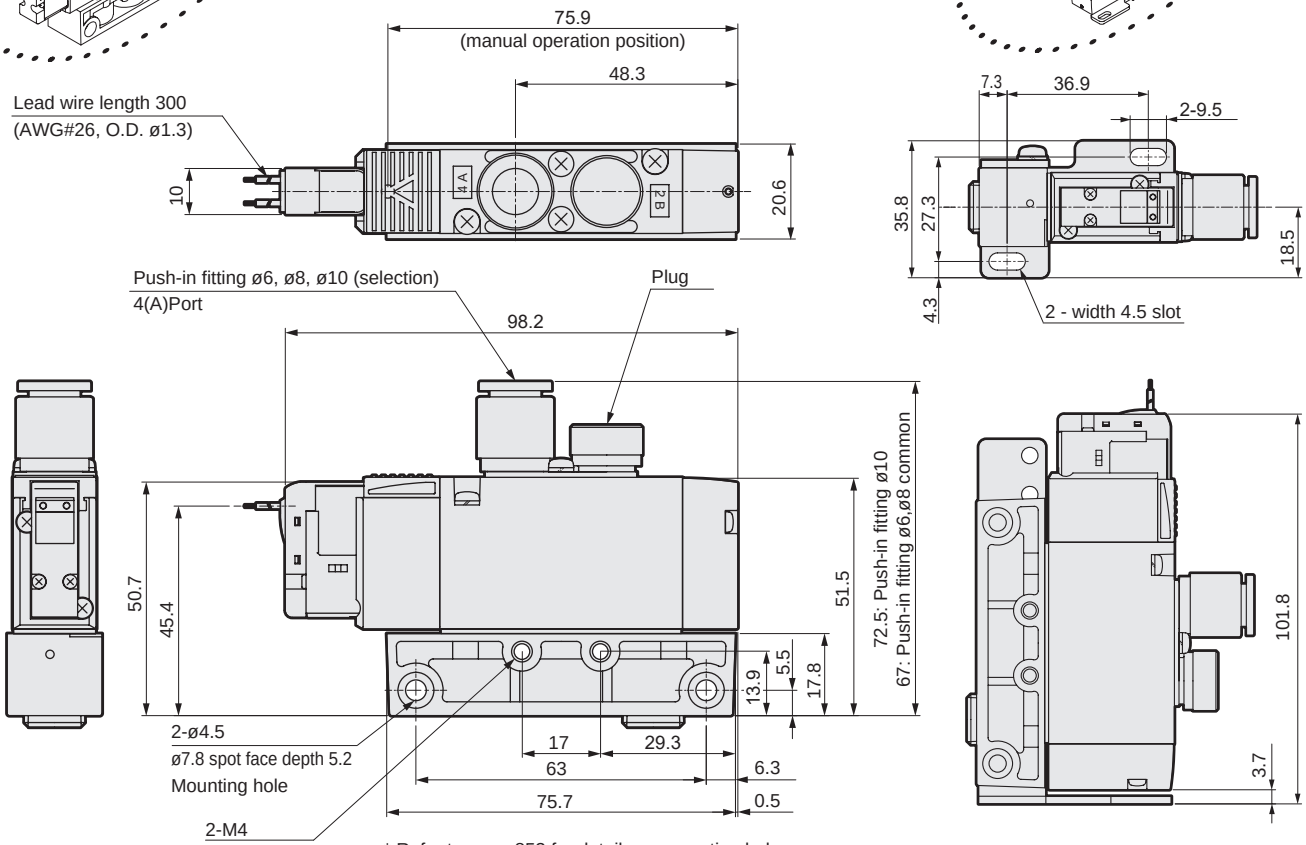

● Mounting plate (P)

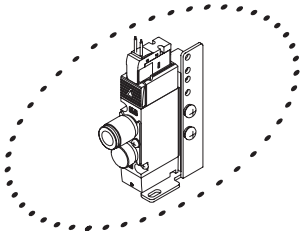

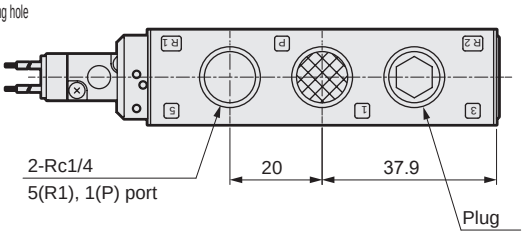

● Rc1/4 female thread (08)

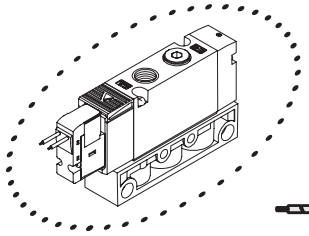

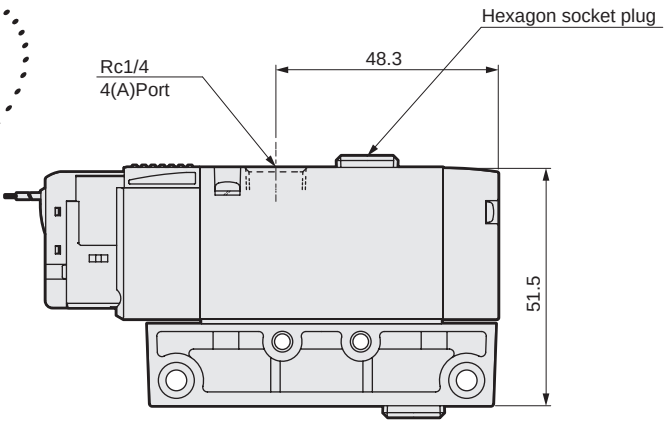

Dimensions

● E-connector (E)

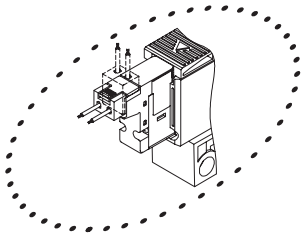

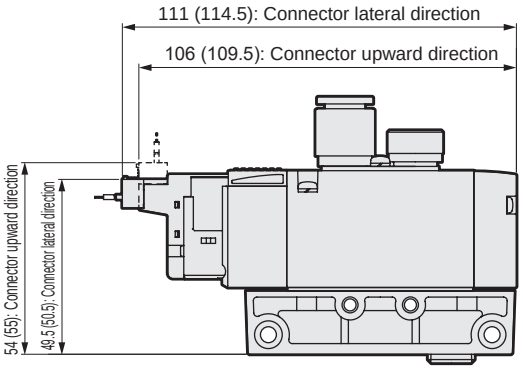

Note: Values in ( ) are for AC voltage.

● EJ type connector (E**J)

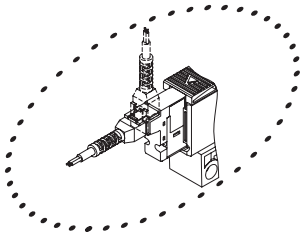

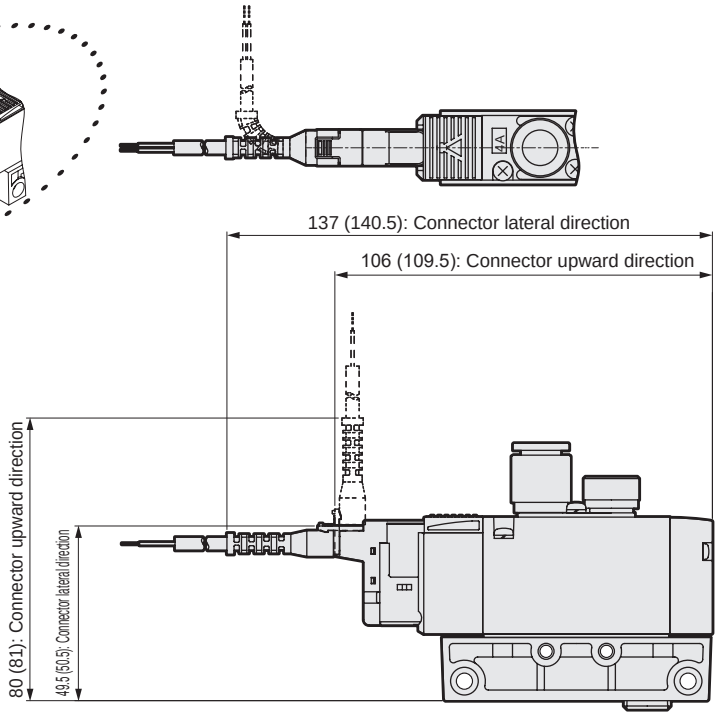

Note: Values in ( ) are for AC voltage.

● DIN terminal box (B)

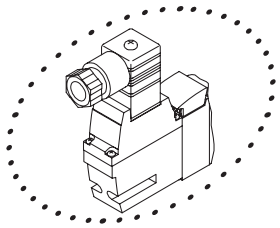

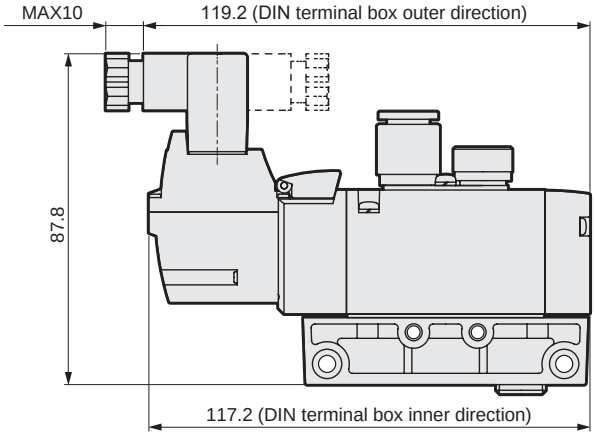

Note: DIN terminal box assembly is shipped facing inward.

Dimensions CAD

3GD3110R

● 2-position single: Normally open grommet lead wire (blank)

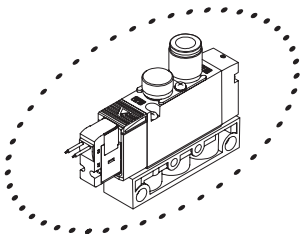

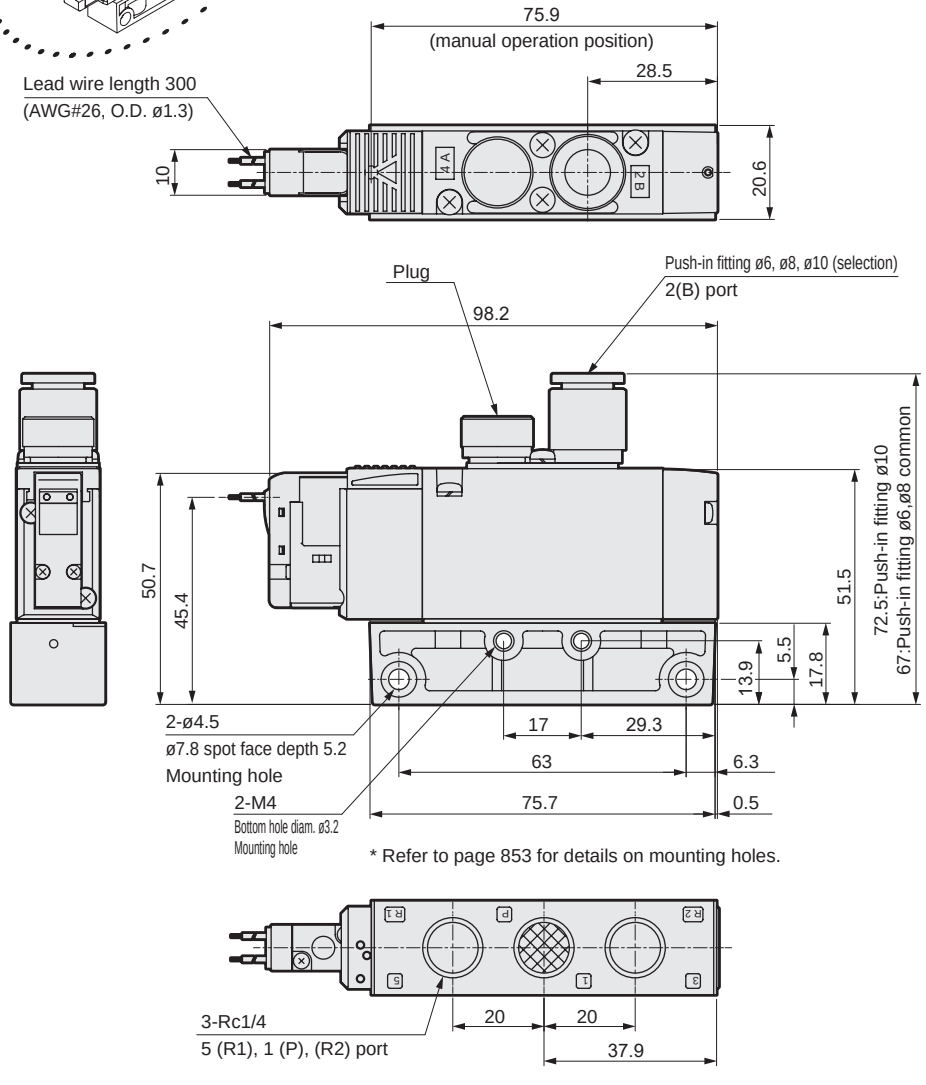

* Refer to page 853 for details on mounting holes.

● Mounting plate(P)

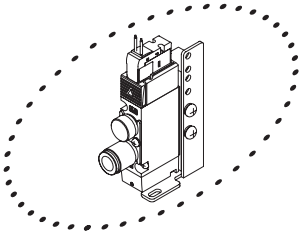

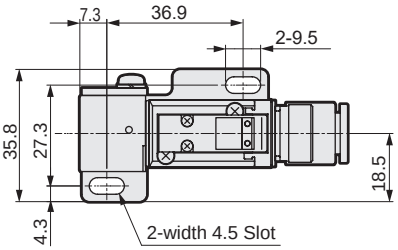

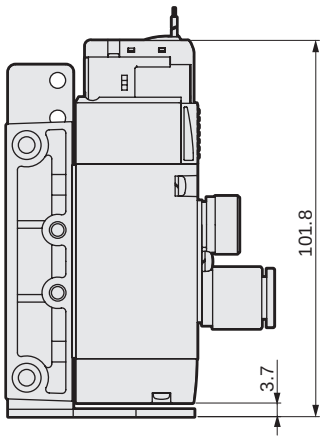

● Rc1/4 female thread (08)

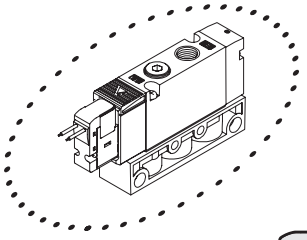

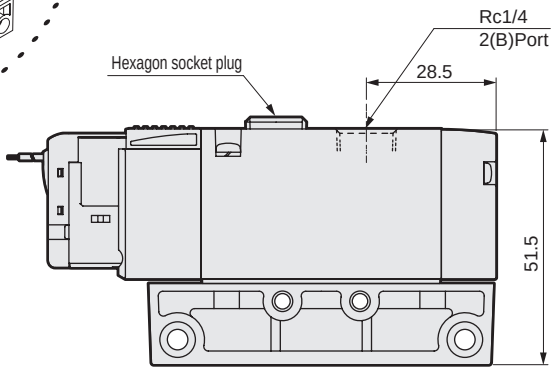

Dimensions

● E-connector (E)

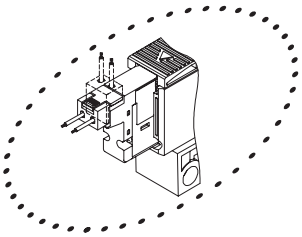

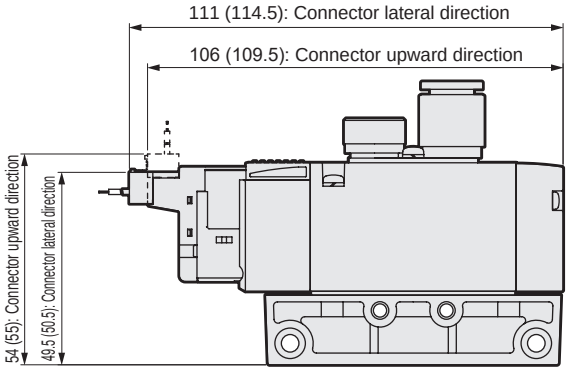

Note: Values in ( ) are for AC voltage.

● EJ type connector (E**J)

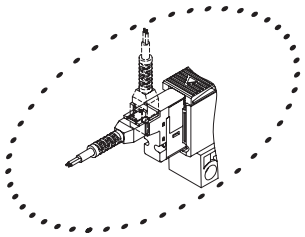

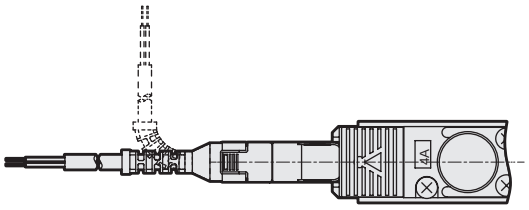

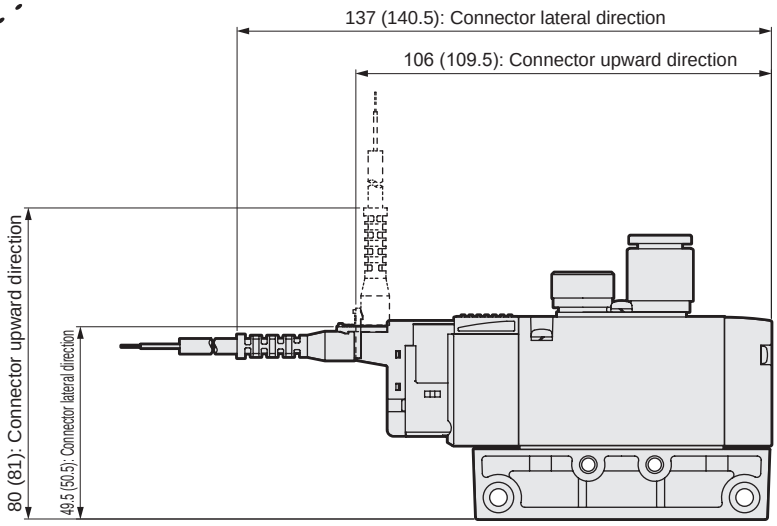

Note: Values in ( ) are for AC voltage.

● DIN terminal box (B)

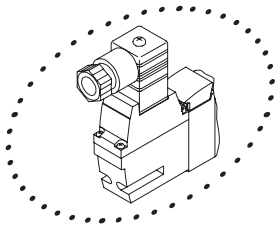

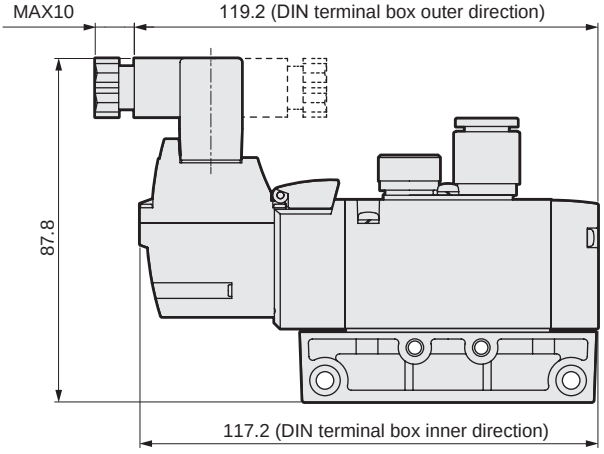

Note: DIN terminal box assembly is shipped facing inward.

Dimensions CAD

4GD110R

● 2-position single grommet lead wire (blank)

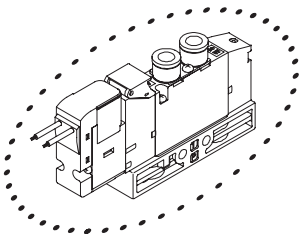

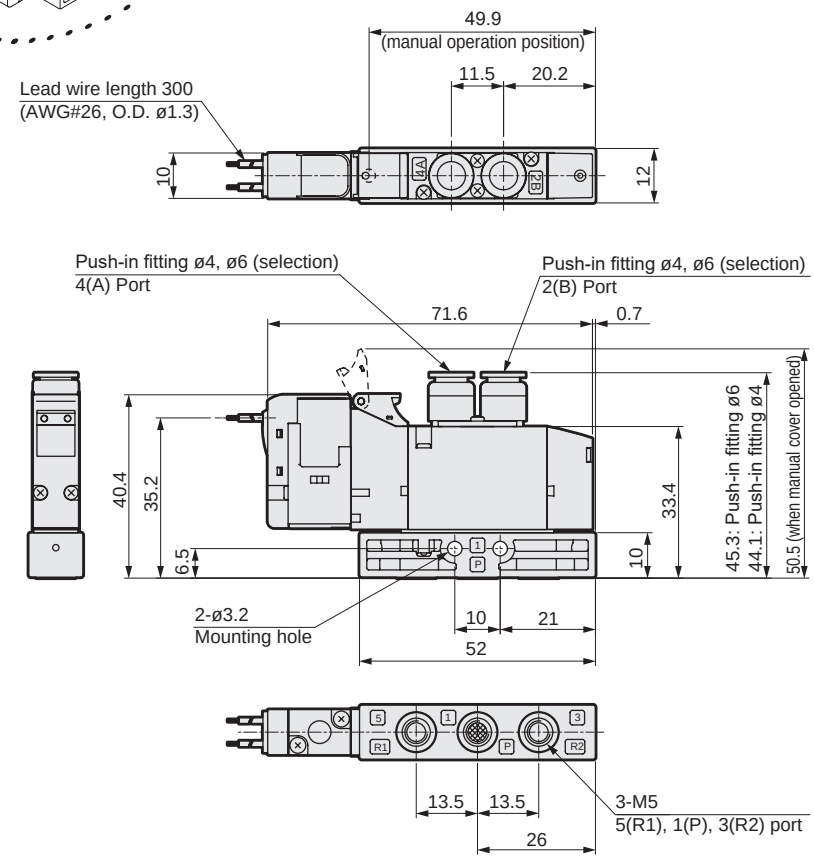

● Mounting plate (P)

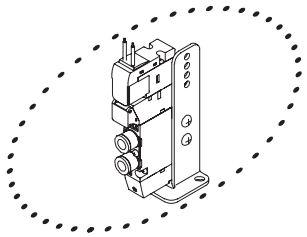

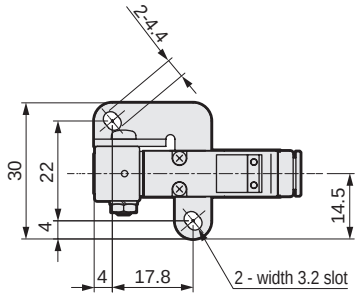

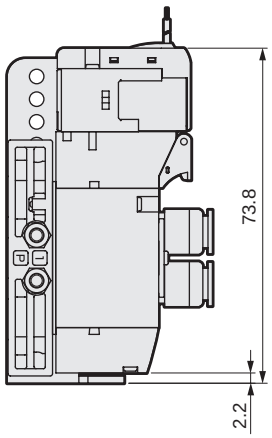

● M5 female thread (M5)

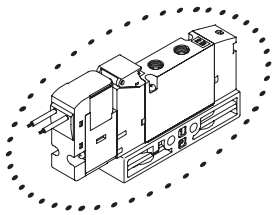

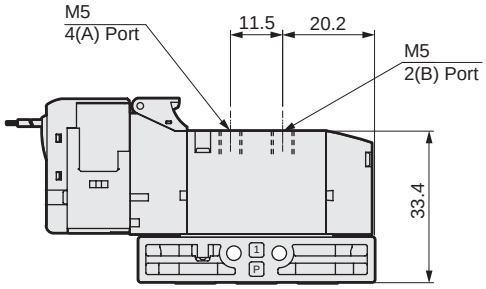

Dimensions

● E-connector (E)

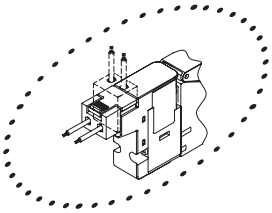

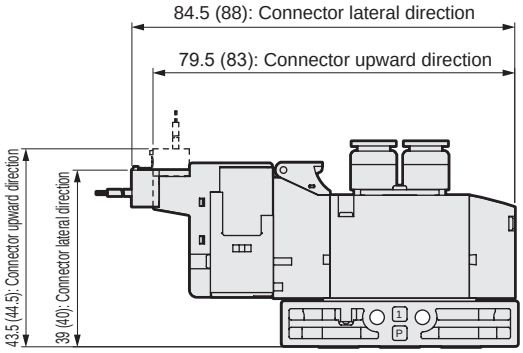

Note: Values in ( ) are for AC voltage.

● EJ type connector (E**J)

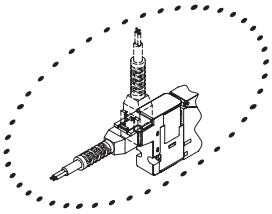

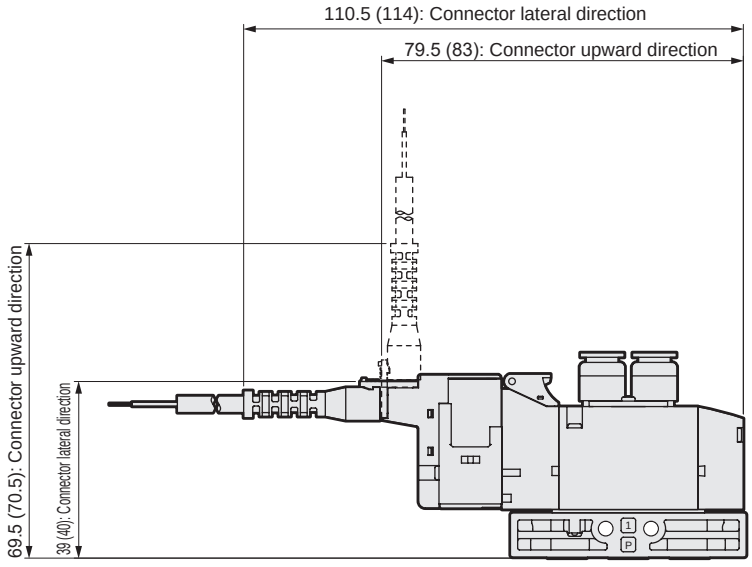

Note: Values in ( ) are for AC voltage.

Dimensions CAD

4GD120R

● 2-position double grommet lead wire (blank)

3GD1660R

● Two 3-port valves integrated grommet lead wire (blank)

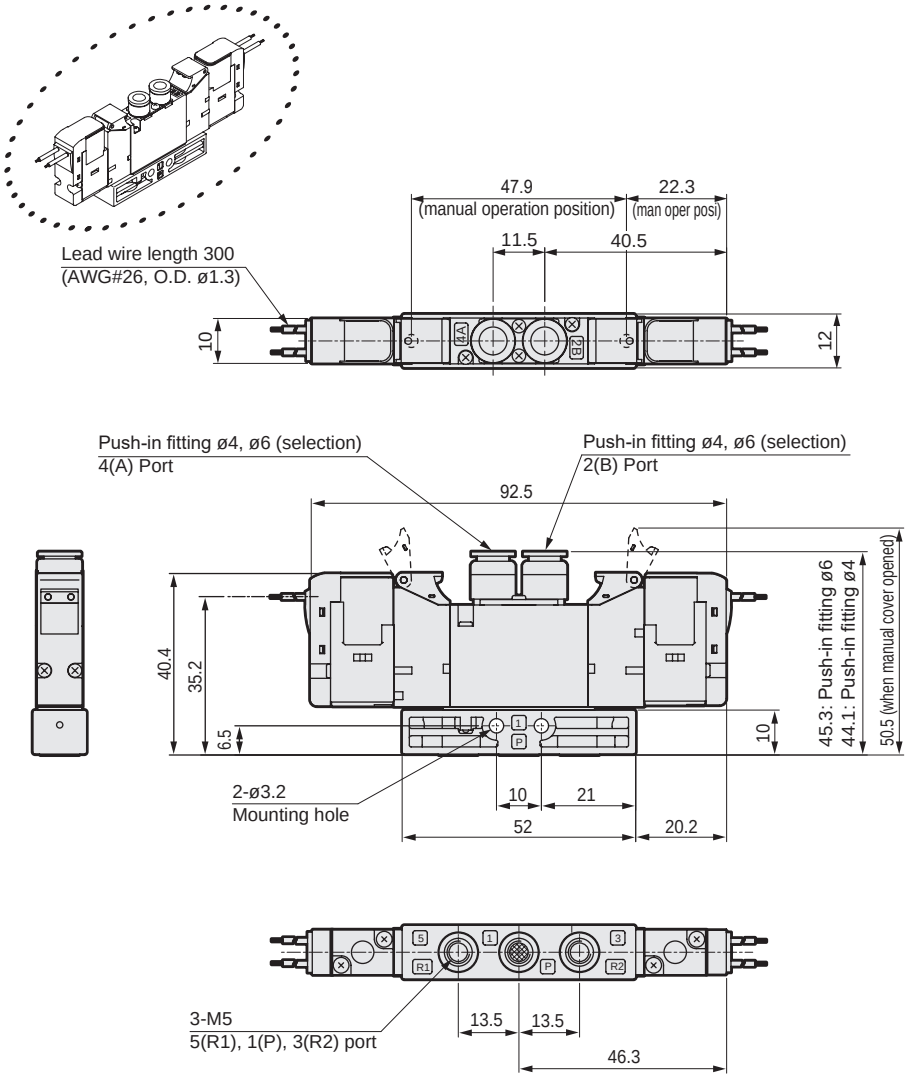

● Mounting plate (P)

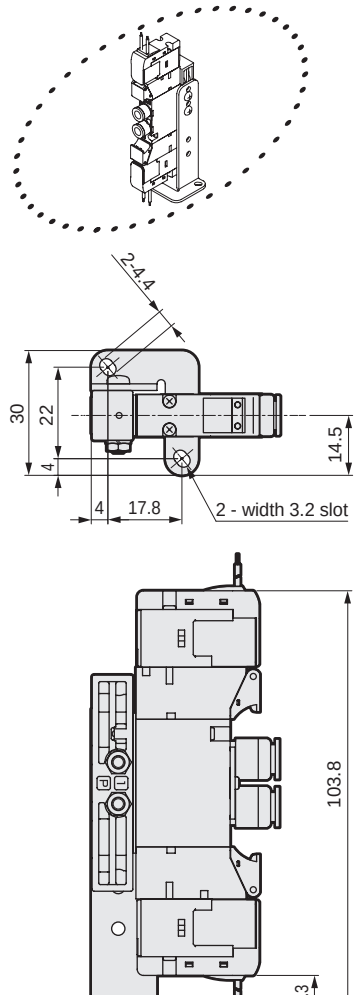

● M5 female thread (M5)

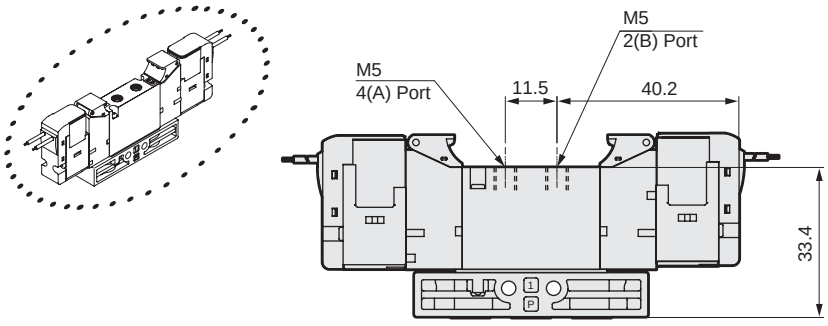

Dimensions

● E-connector (E)

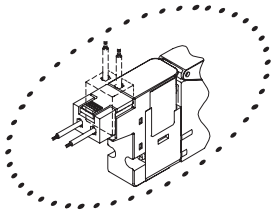

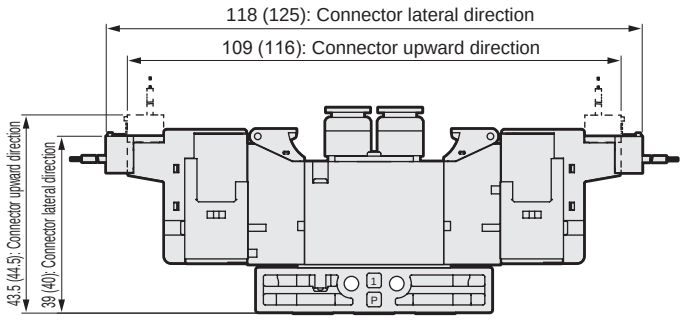

Note: Values in ( ) are for AC voltage.

● EJ type connector (E**J)

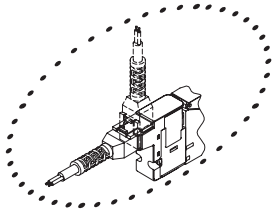

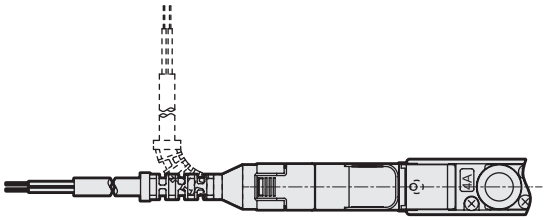

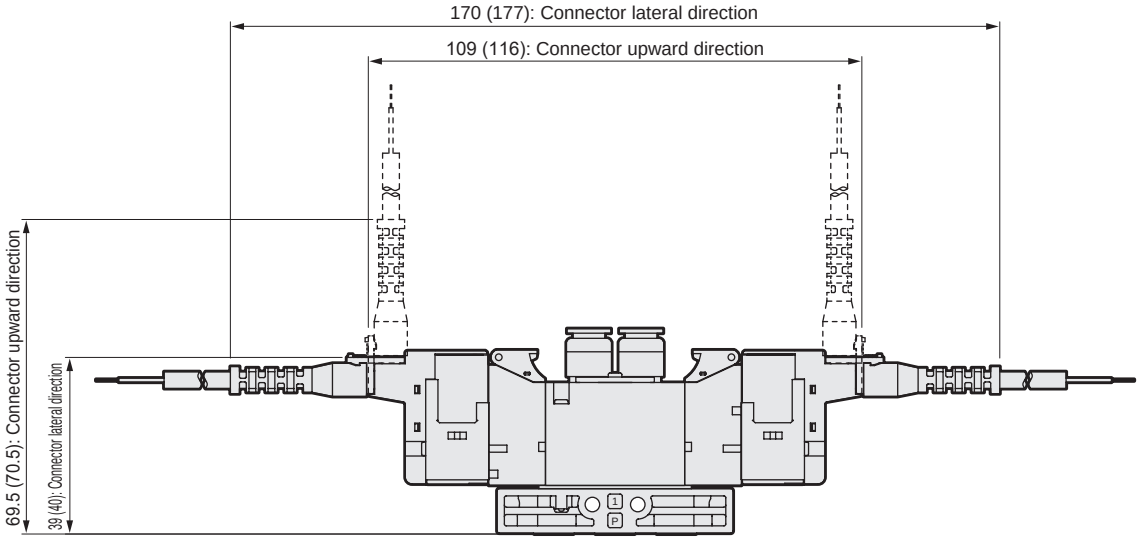

Note: Values in ( ) are for AC voltage.

Dimensions CAD

4GD1$^{3}_{4}_{5}$0R

● 3-position grommet lead wire (blank)

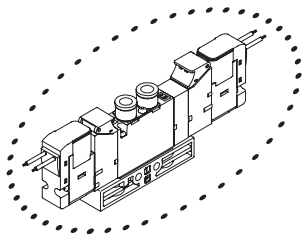

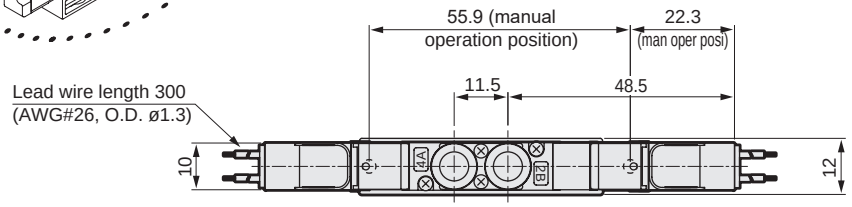

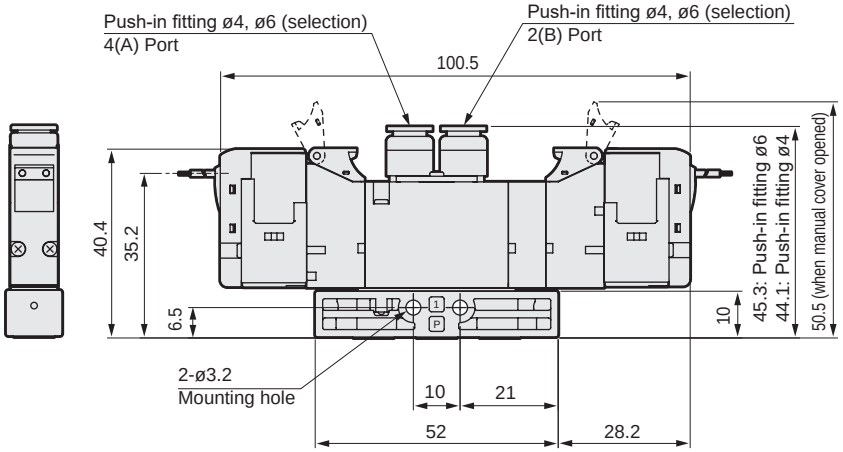

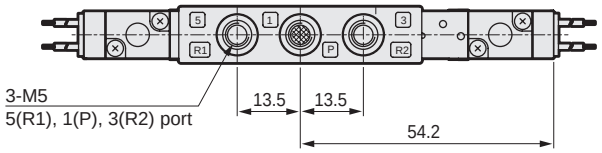

● Mounting plate (P)

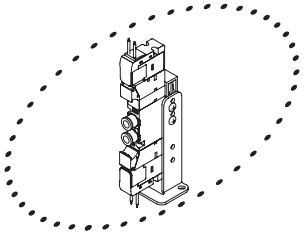

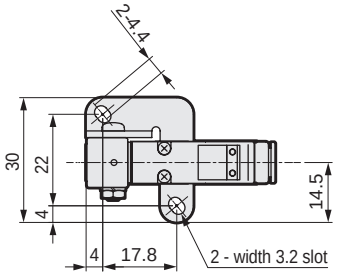

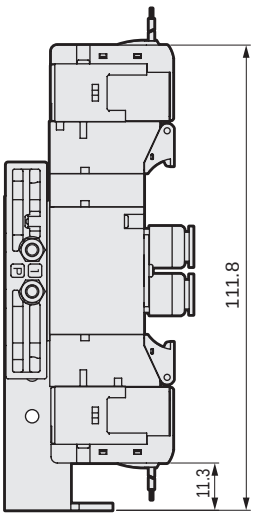

● M5 female thread (M5)

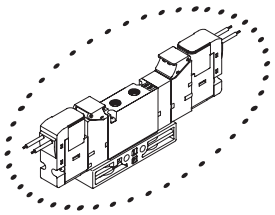

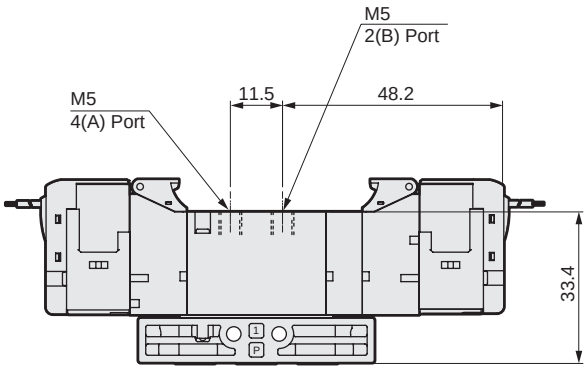

Dimensions

● E-connector (E)

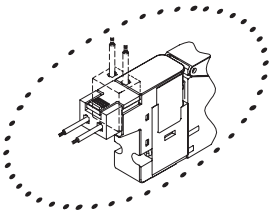

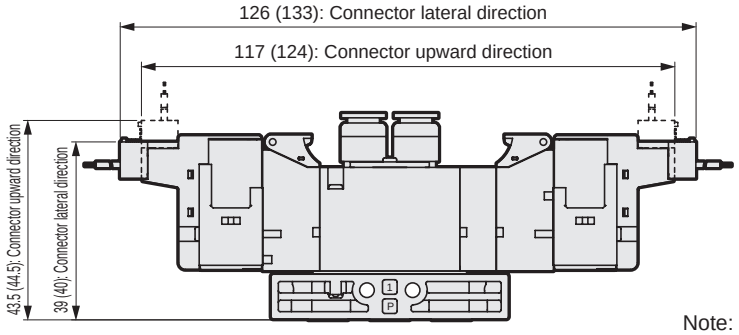

Note: Values in ( ) are for AC voltage.

● EJ type connector (E**J)

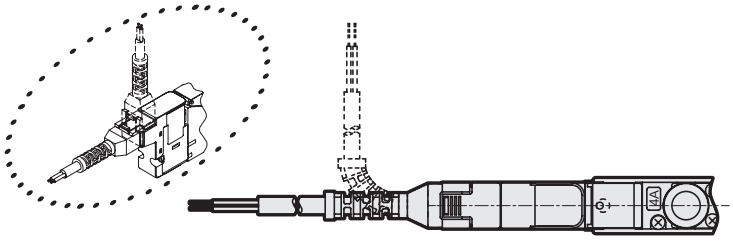

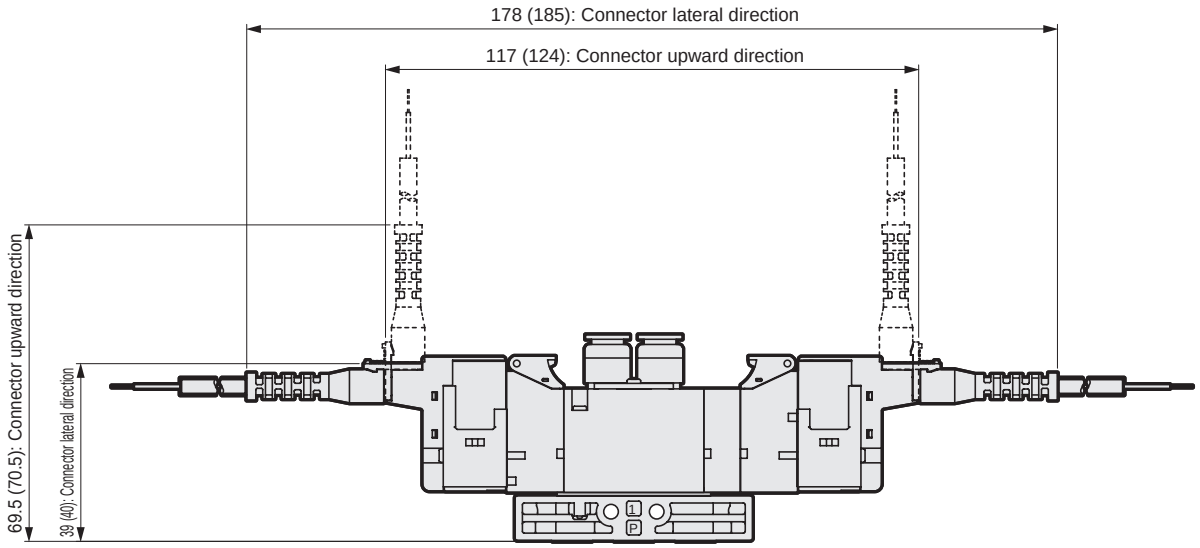

Note: Values in ( ) are for AC voltage.

Dimensions CAD

4GD210R

● 2-position single grommet lead wire (blank)

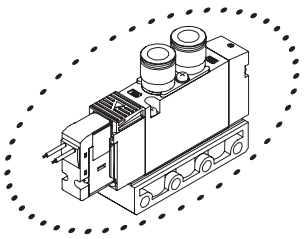

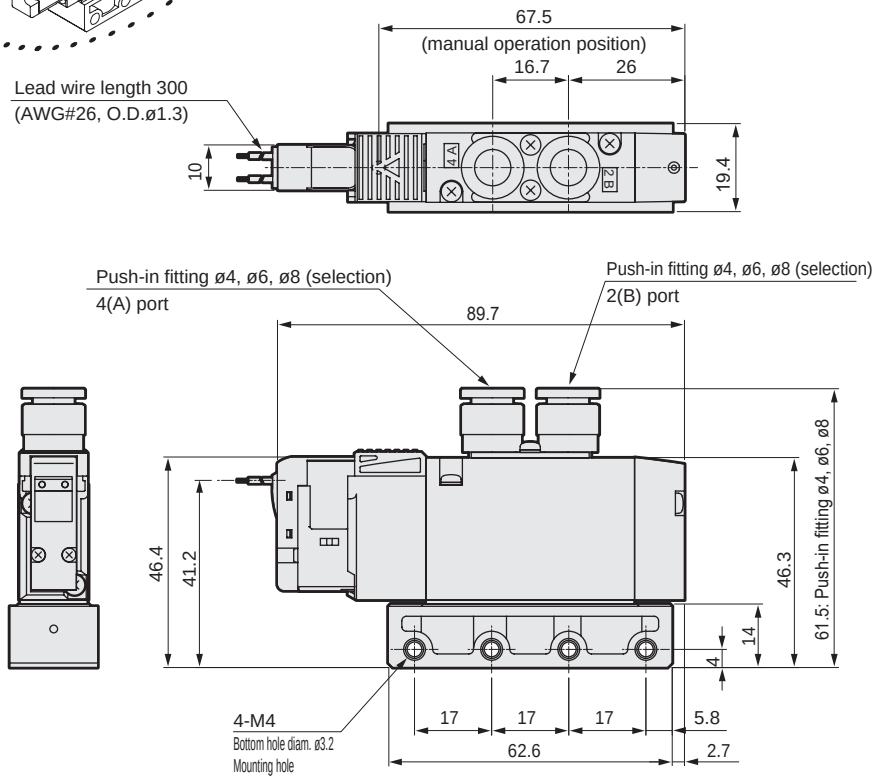

* Refer to page 853 for details on mounting holes.

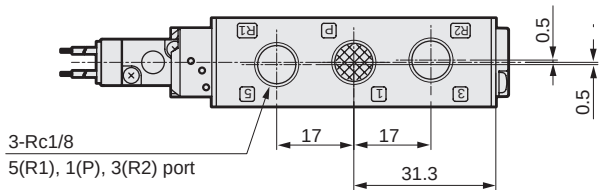

● Mounting plate (P)

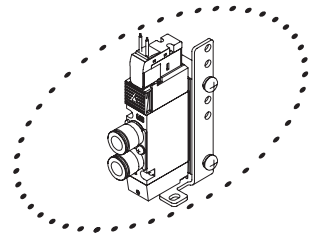

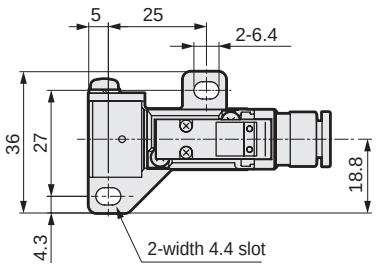

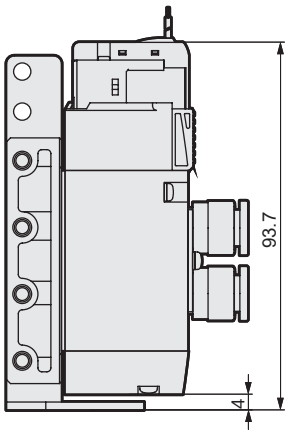

● Rc1/8 female thread (06)

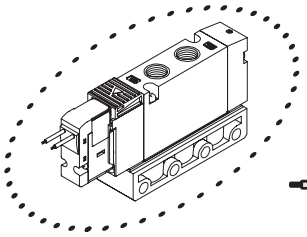

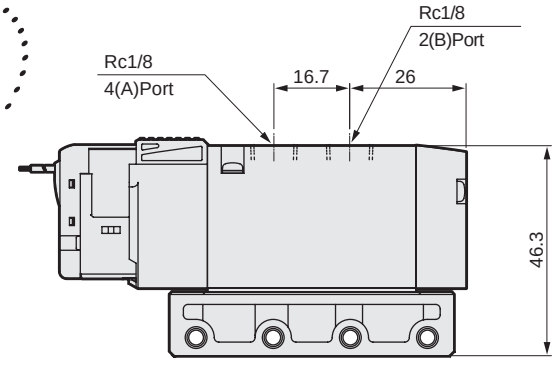

Dimensions

● E-connector (E)

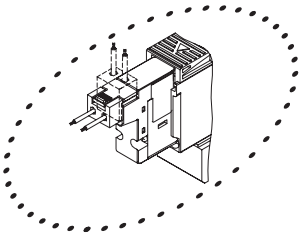

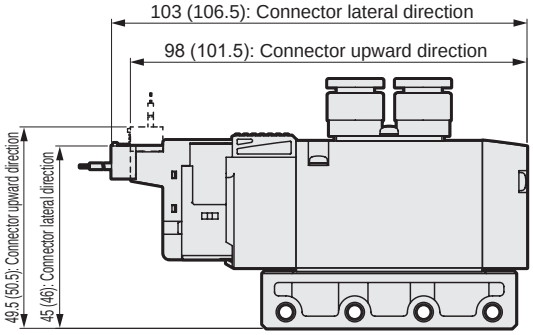

Note: Values in ( ) are for AC voltage.

● EJ type connector (E**J)

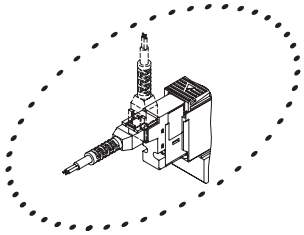

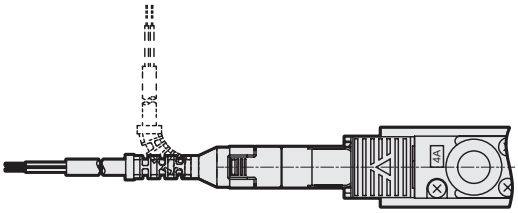

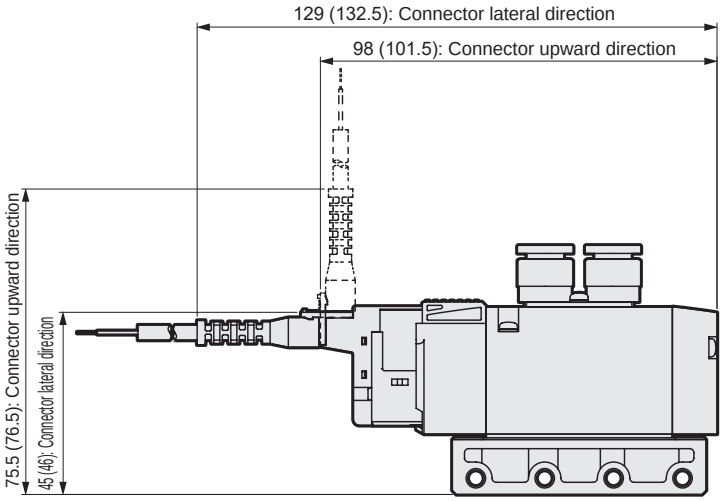

Note: Values in ( ) are for AC voltage.

● DIN terminal box (B)

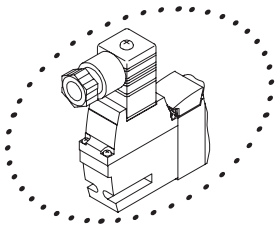

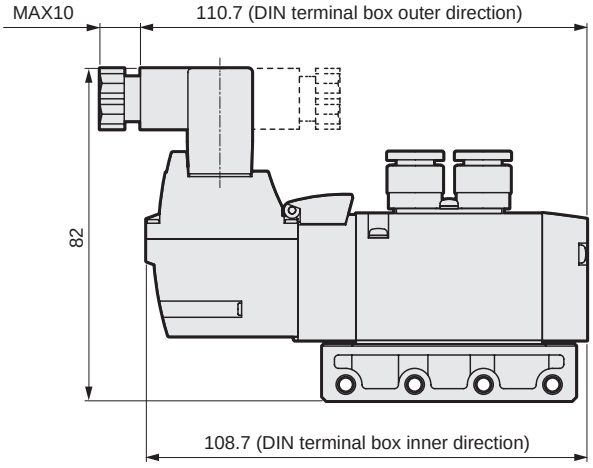

Note: DIN terminal box assembly is shipped facing inward.

Dimensions CAD

4GD220R

● 2-position double grommet lead wire (blank)

● Mounting plate (P)

3GD2660R

● Two 3-port valves integrated grommet lead wire (blank)

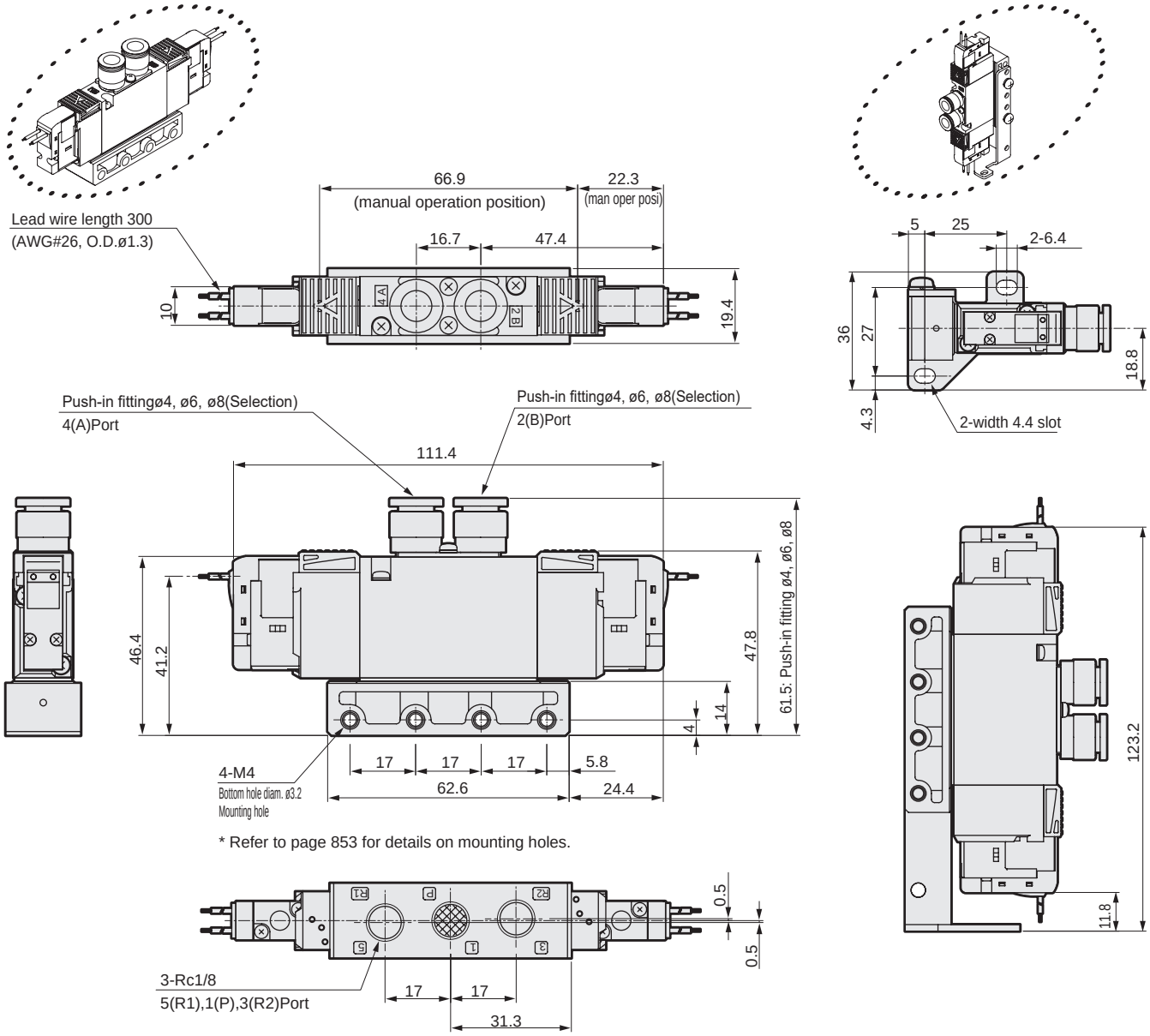

* Refer to page 853 for details on mounting holes.

● Rc1/8 female thread (06)

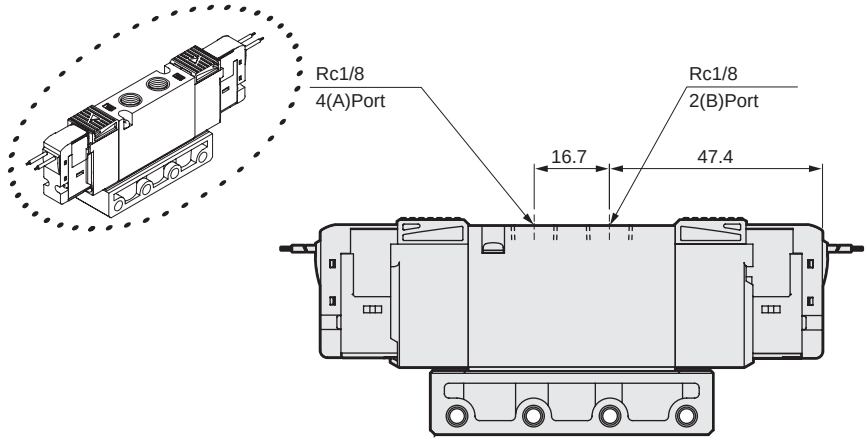

Dimensions

● E-connector (E)

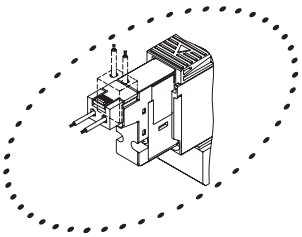

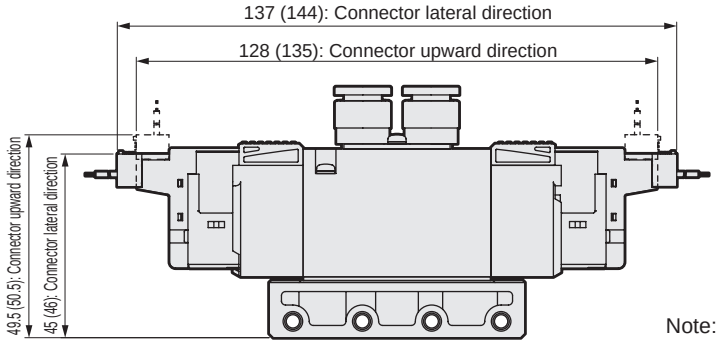

Note: Values in ( ) are for AC voltage.

● EJ type connector (E**J)

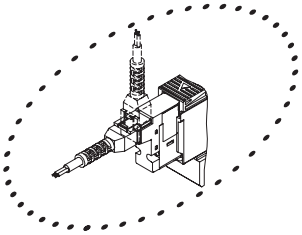

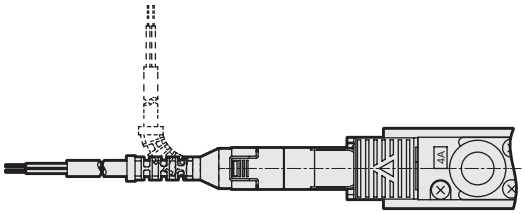

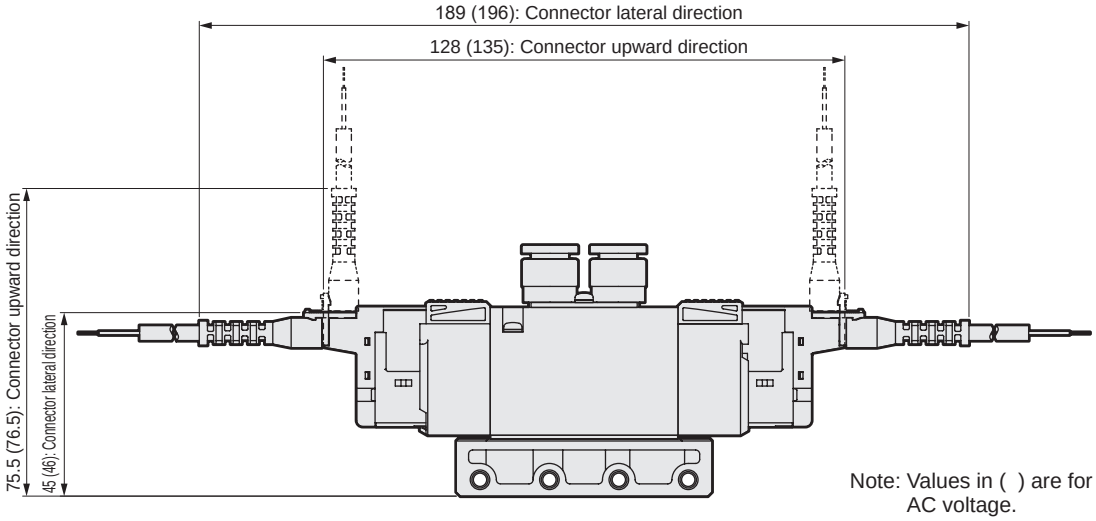

Note: Values in ( ) are for AC voltage.

● DIN terminal box (B)

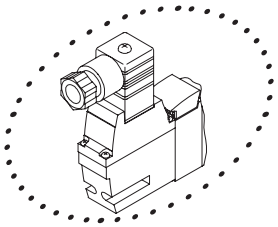

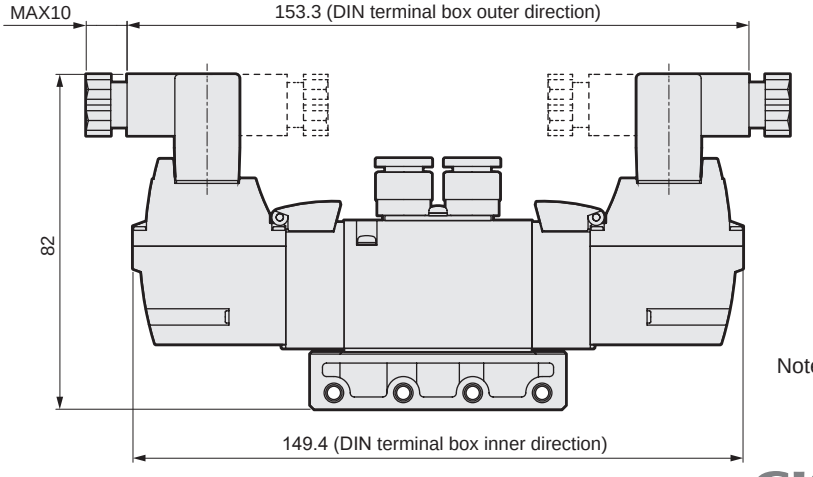

Note: DIN terminal box assembly is shipped facing inward.

Dimensions CAD

4GD2$^{3}_{5}$0R

● 3-position grommet lead wire (blank)

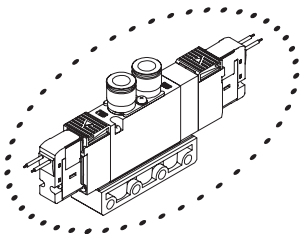

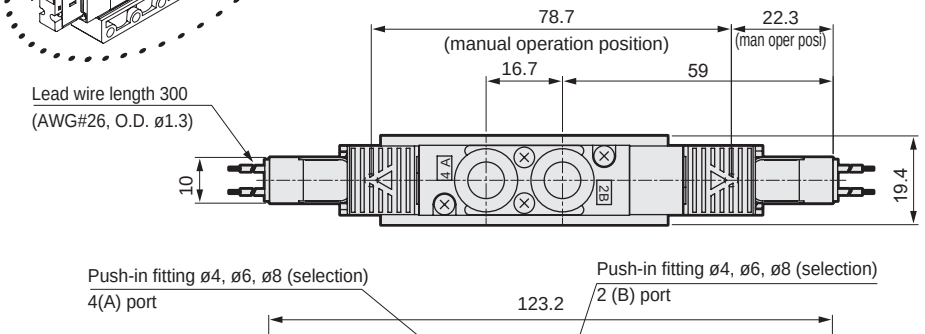

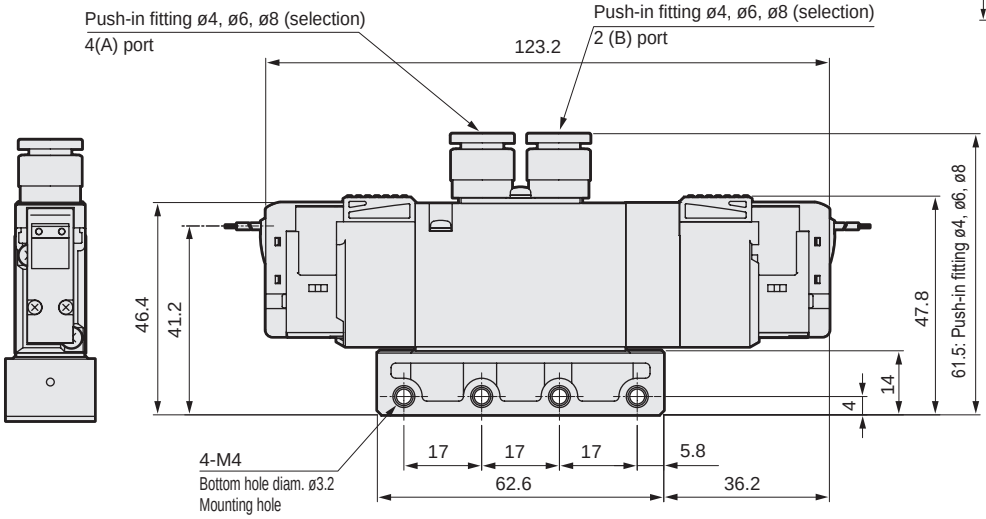

* Refer to page 853 for details on mounting holes.

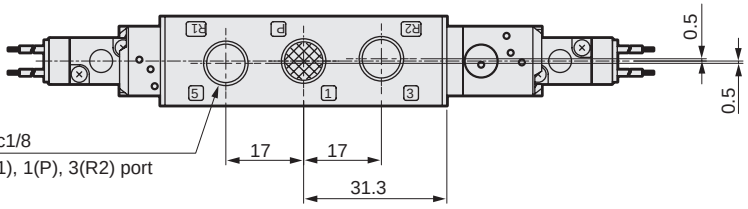

● Mounting plate (P)

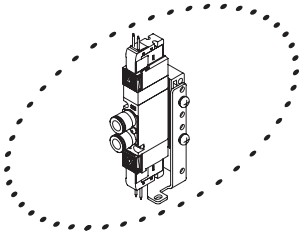

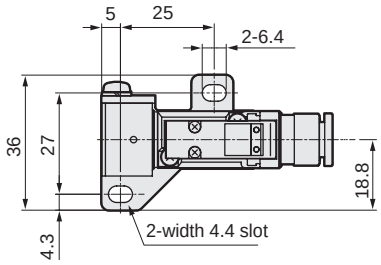

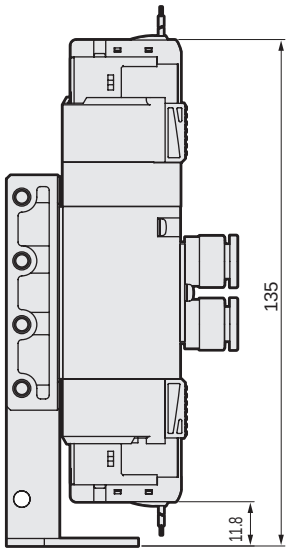

● Rc1/8 female thread (06)

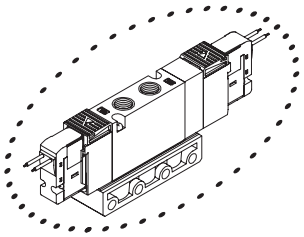

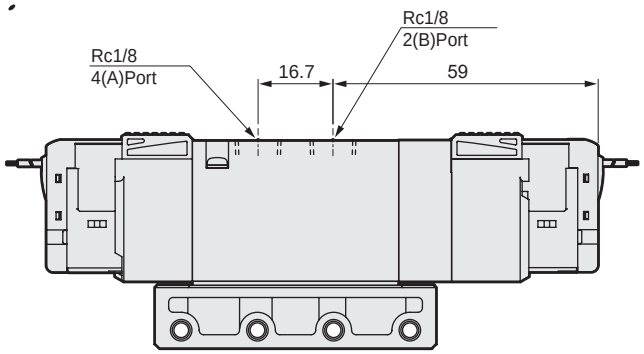

Dimensions

● E-connector (E)

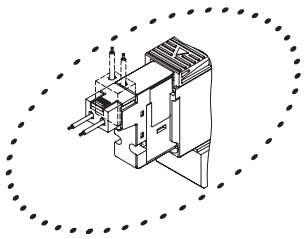

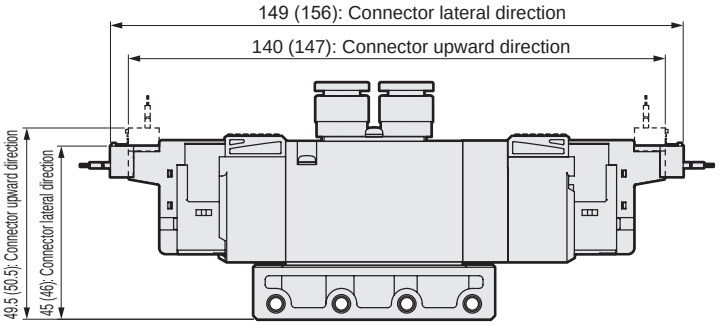

Note: Values in ( ) are for AC voltage.

● EJ type connector (E**J)

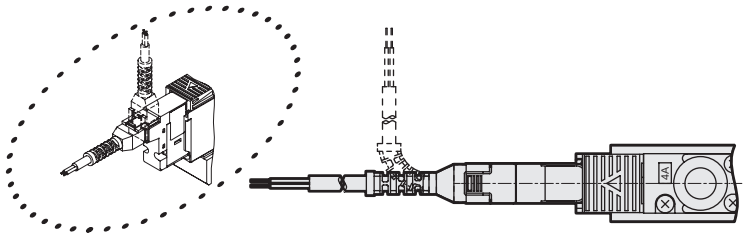

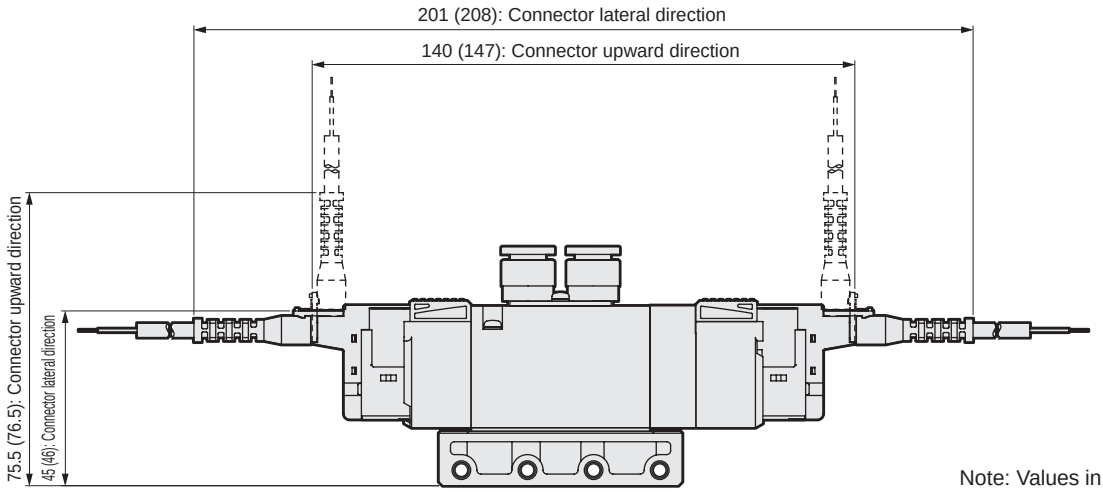

Note: Values in ( ) are for AC voltage.

● DIN terminal box (B)

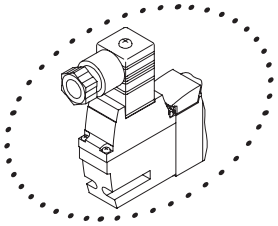

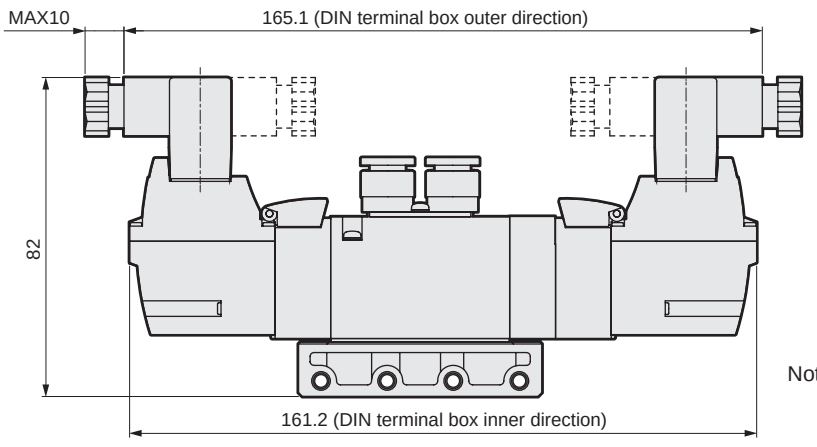

Note: DIN terminal box assembly is shipped facing inward.

Dimensions CAD

4GD310R

● 2-position single grommet lead wire (blank)

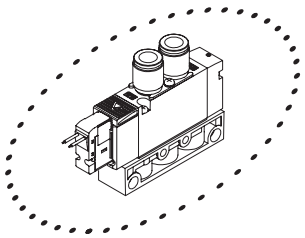

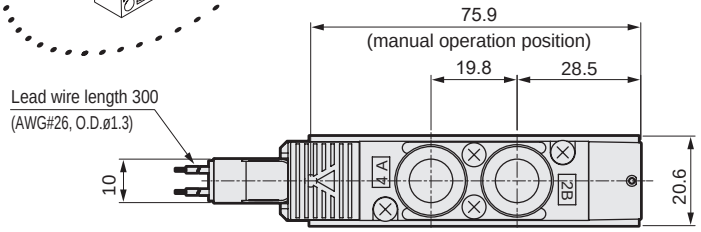

● Mounting plate (P)

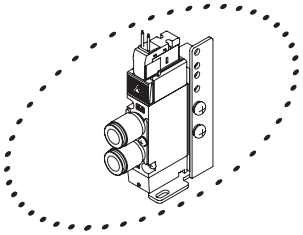

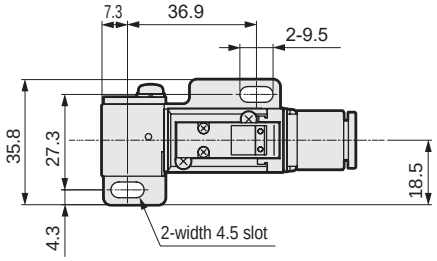

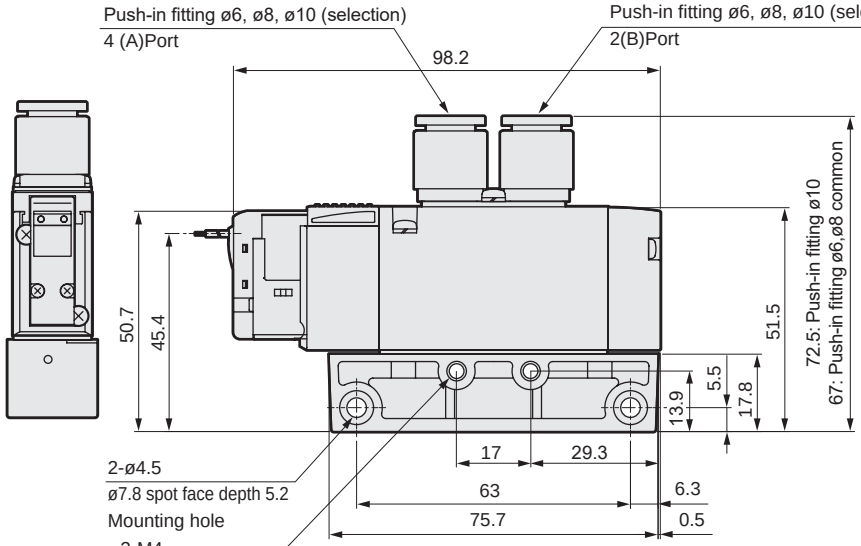

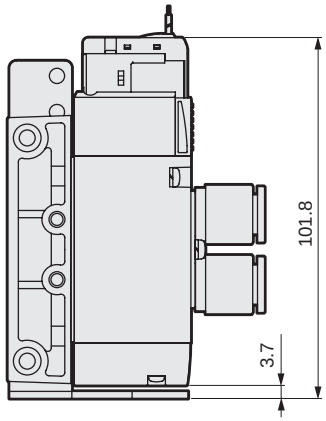

* Refer to page 853 for details on mounting holes.

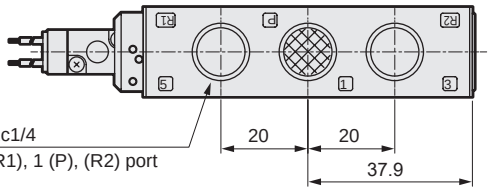

● Rc1/4 female thread (08)

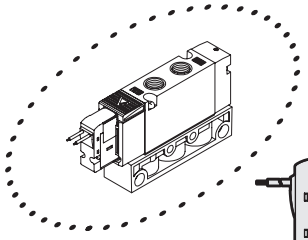

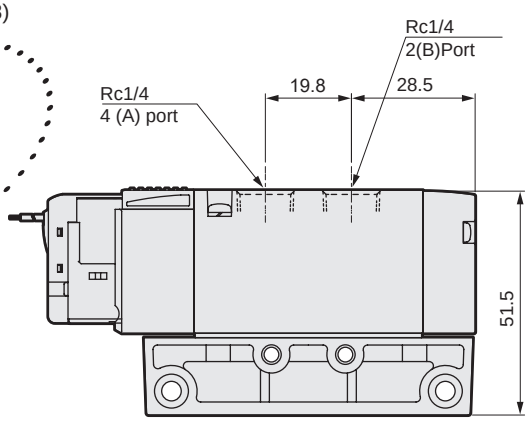

Dimensions

● E-connector (E)

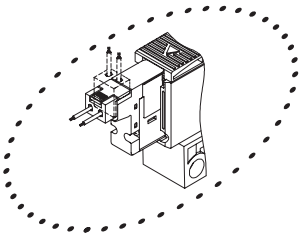

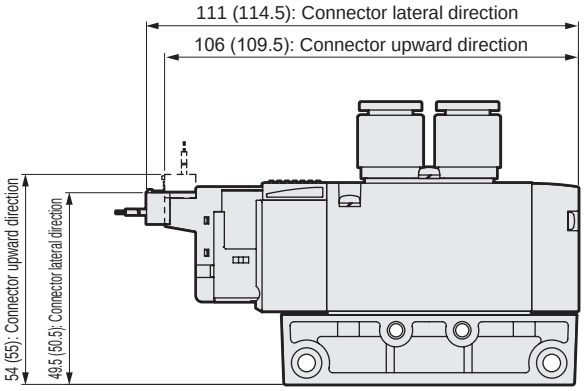

Note: Values in ( ) are for AC voltage.

● EJ type connector (E**J)

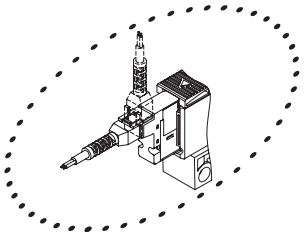

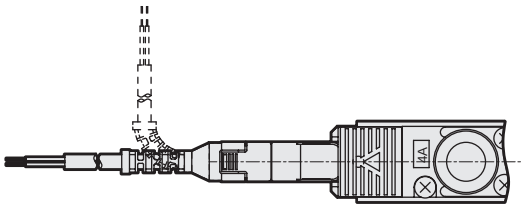

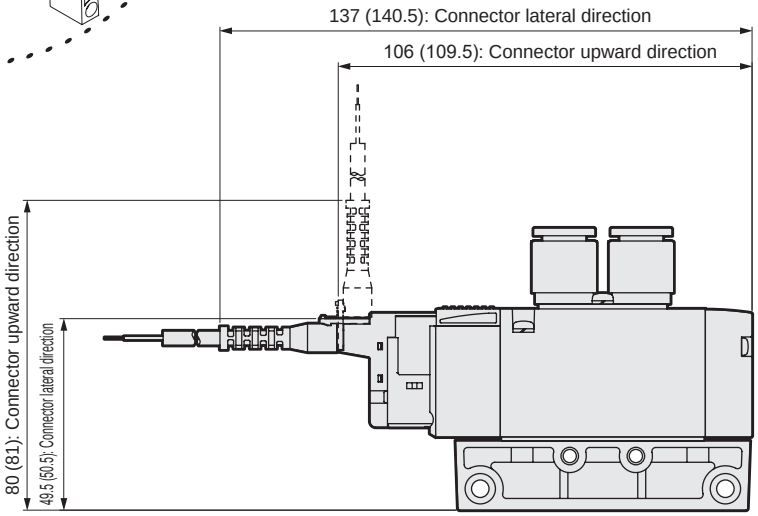

Note: Values in ( ) are for AC voltage.

● DIN terminal box (B)

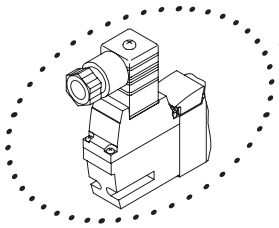

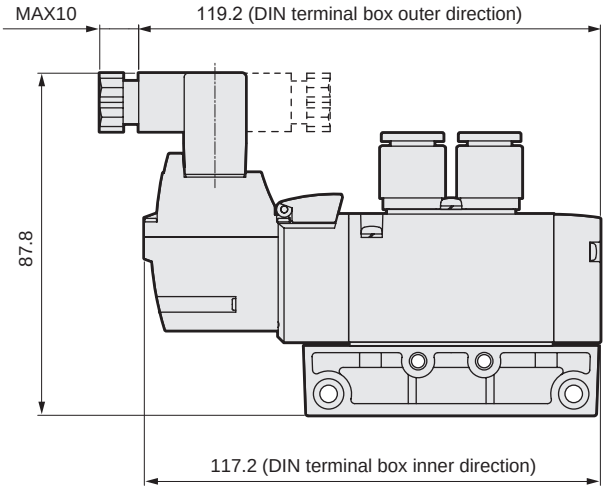

Note: DIN terminal box assembly is shipped facing inward.

Dimensions CAD

4GD320R

● 2-position double grommet lead wire (blank)

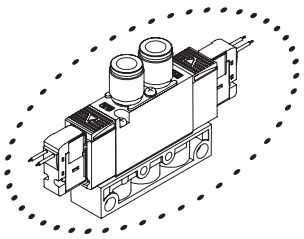

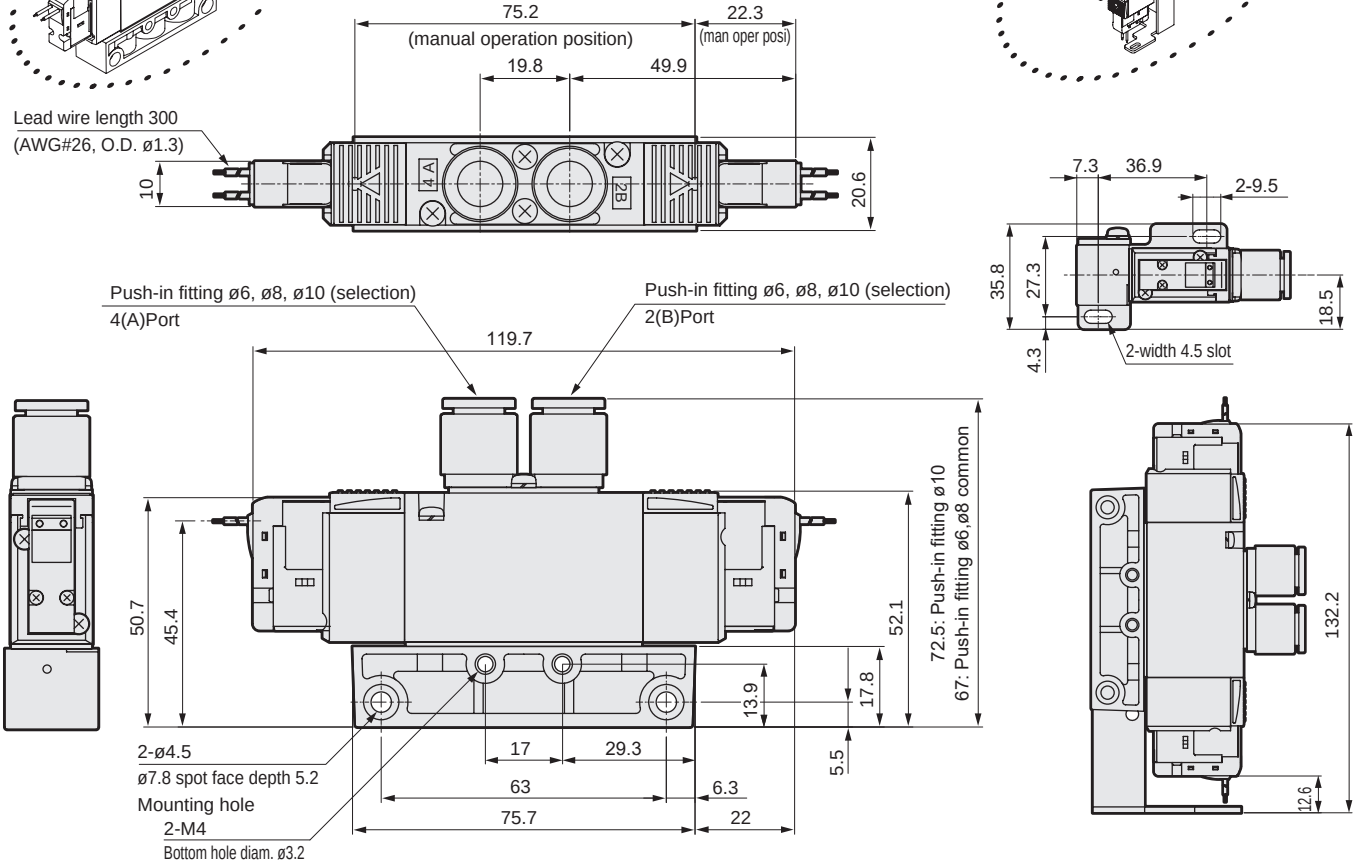

* Refer to page 853 for details on mounting holes.

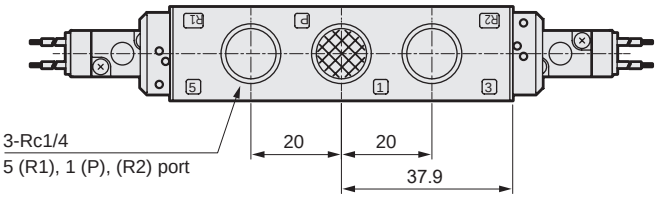

● Mounting plate (P)

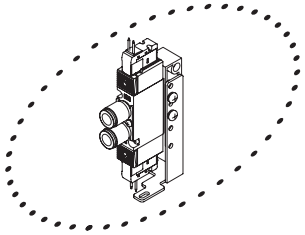

● Rc1/4 female thread (08)

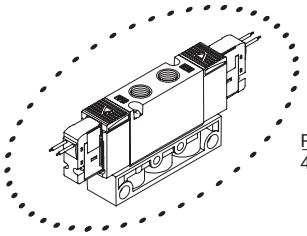

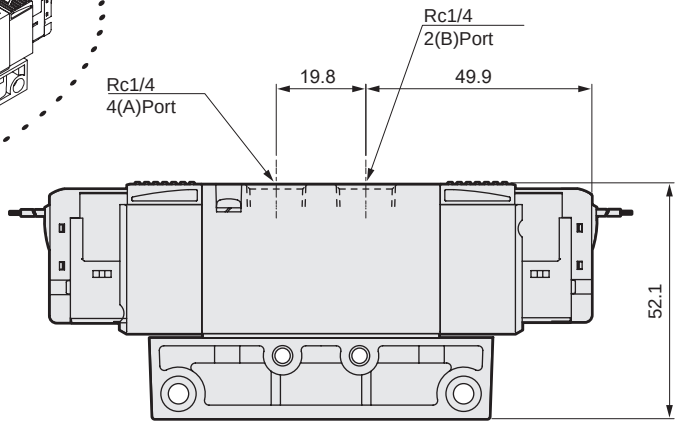

Dimensions

● E-connector (E)

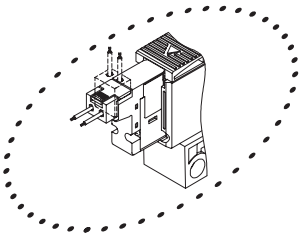

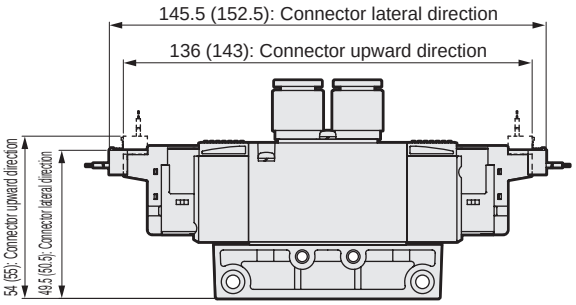

Note: Values in ( ) are for AC voltage.

● EJ type connector (E**J)

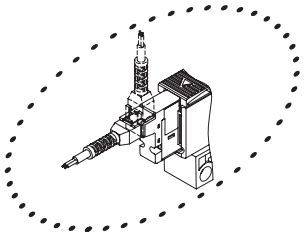

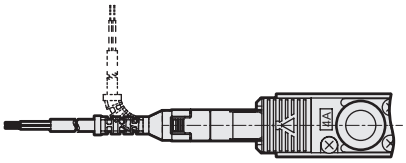

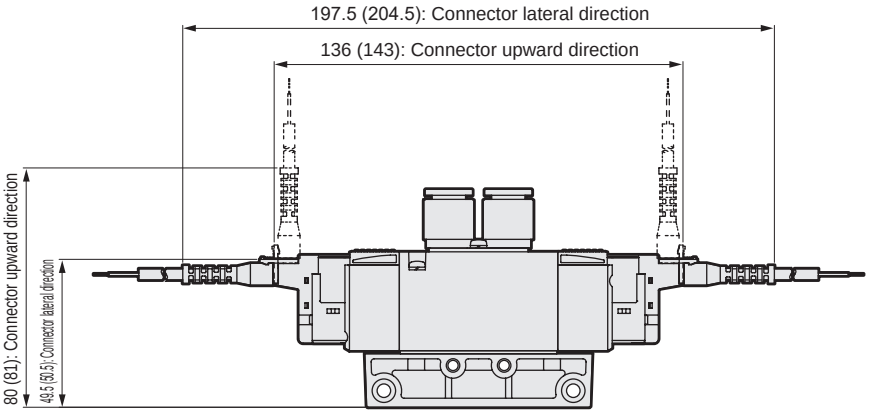

Note: Values in ( ) are for AC voltage.

● DIN terminal box (B)

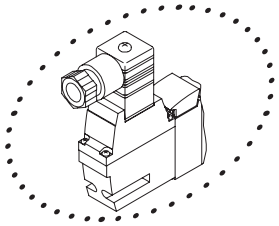

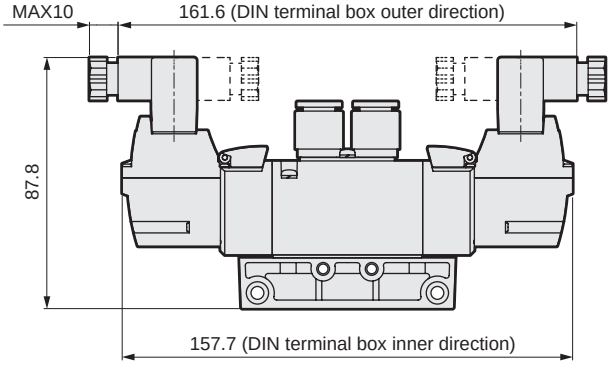

Note: DIN terminal box assembly is shipped facing inward.

Dimensions CAD

4GD3$^{3}_{5}$0R

● 3-position grommet lead wire (blank)

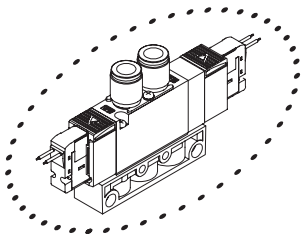

● Mounting plate (P)

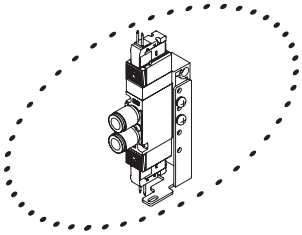

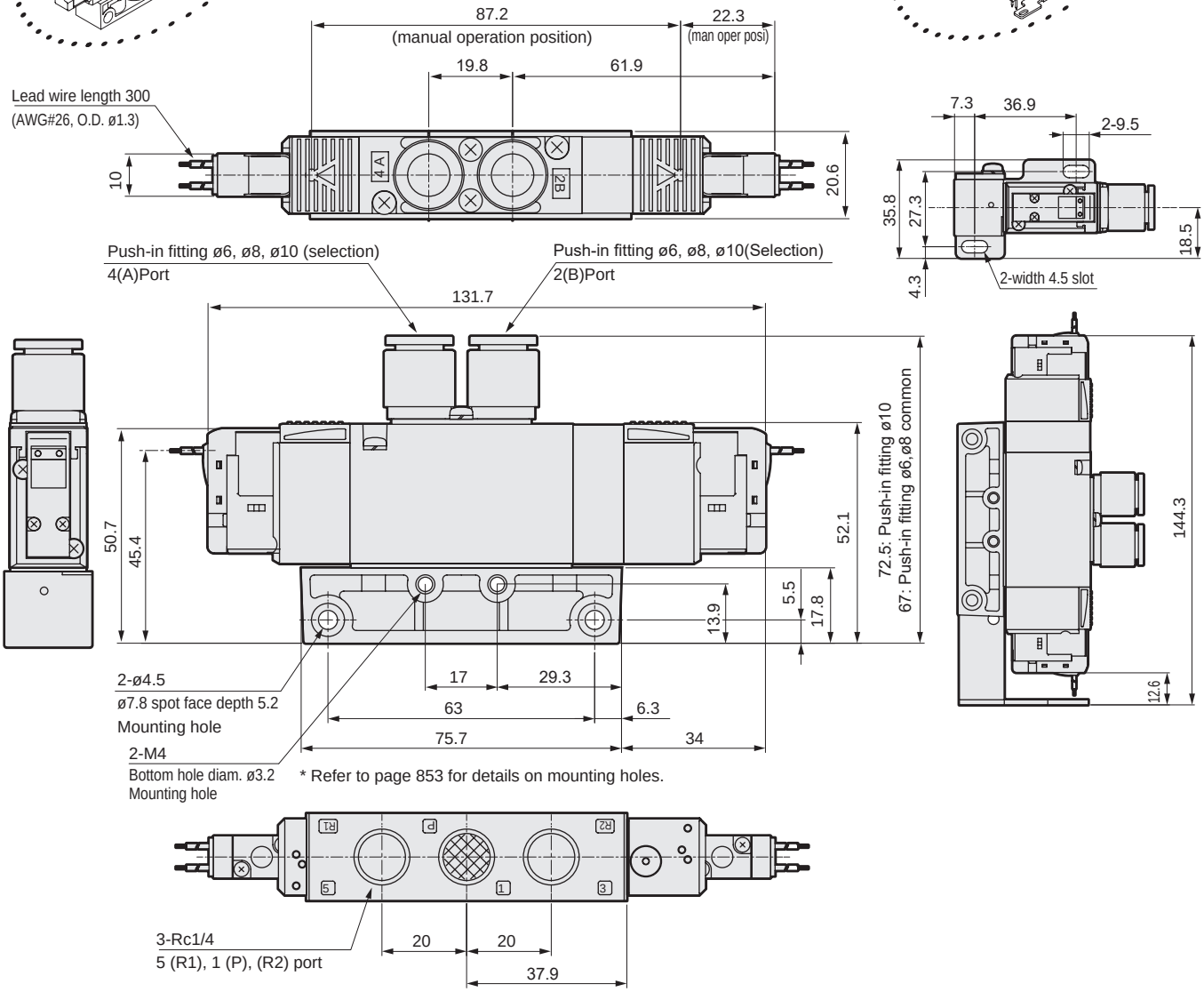

● Rc1/4 female thread (08)

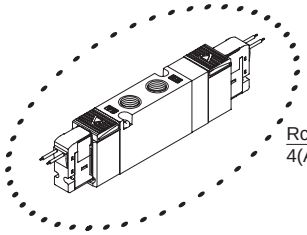

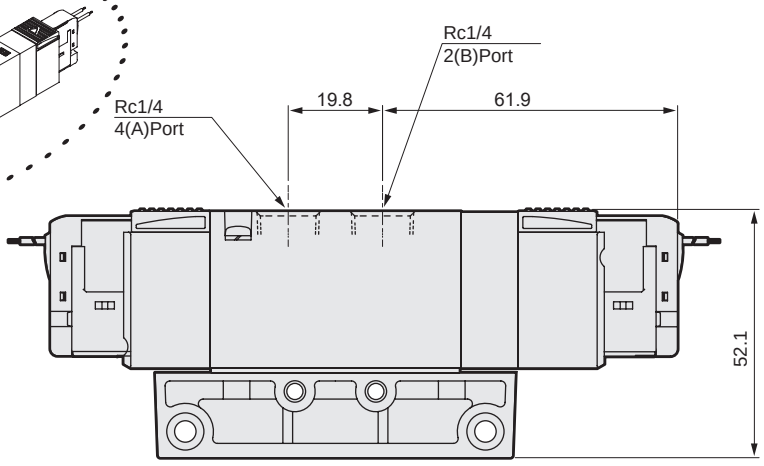

Dimensions

● E-connector (E)

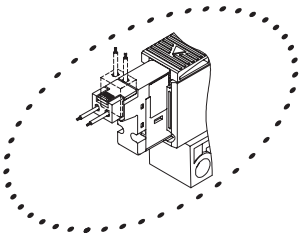

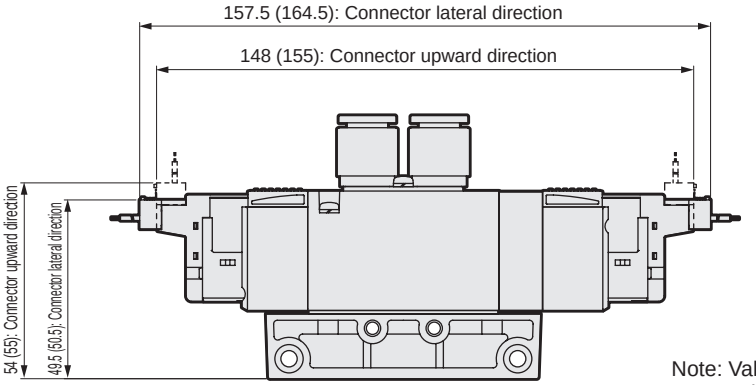

Note: Values in ( ) are for AC voltage.

● EJ type connector (E**J)

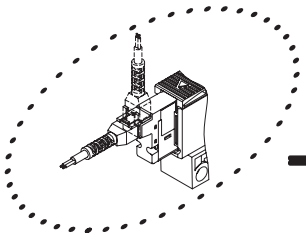

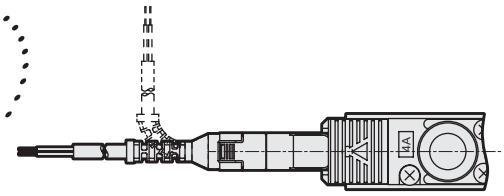

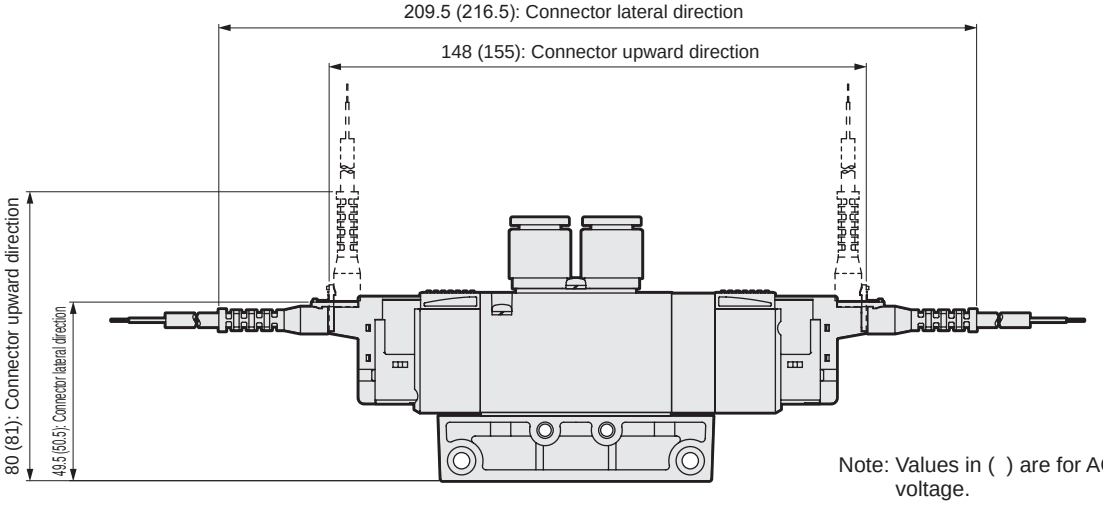

Note: Values in ( ) are for AC voltage.

● DIN terminal box (B)

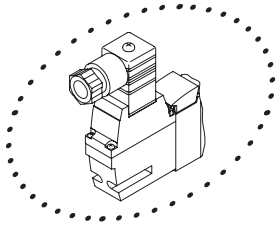

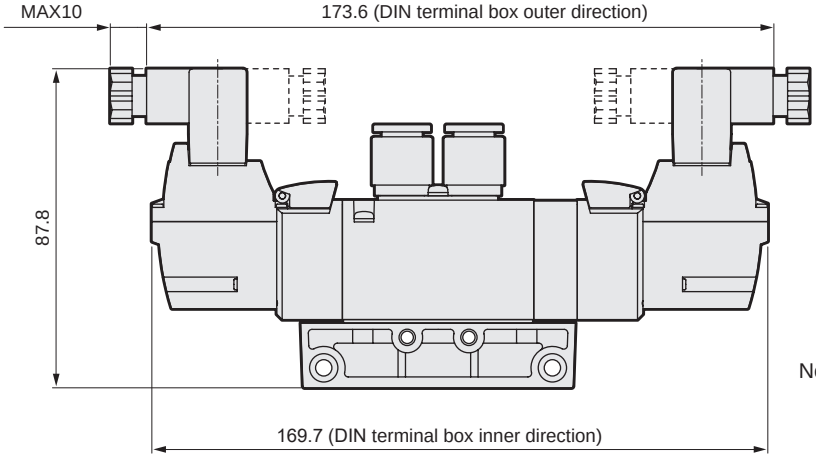

Note: DIN terminal box assembly is shipped facing inward.

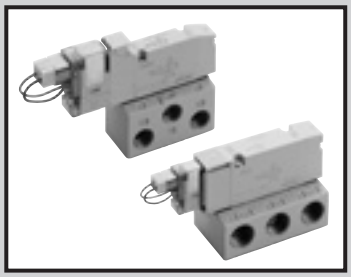

Single valve
Base piping

3GE1/2 / 4GE1/2/3 Series

● Cylinder bore size: ø20 to ø100

JIS symbol

● Two 3-port valves integrated
(A side valve: NC, B side valve: NC)

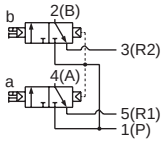

● 5-port valve

2-position single

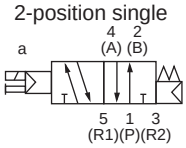

2-position double

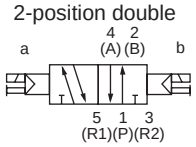

3-position all ports closed

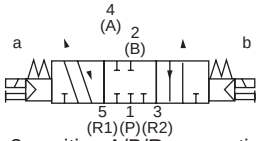

3-position A/B/R connection

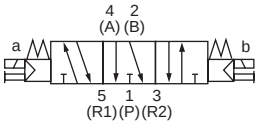

3-position P/A/B connection

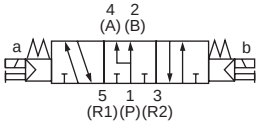

Common specifications

Item	Description
Valve and operation	Pilot operated soft spool valve
Working fluid	Compressed air
Max. working pressure MPa	0.7 (≈100 psi, 7 bar)
Min. working pressure MPa	0.2 (≈29 psi, 2 bar)
Proof pressure MPa	1.05 (≈150 psi, 10.5 bar)
Ambient temperature °C	-5 (23°F) to 55 (131°F) (no freezing)
Fluid temperature °C	5 (41°F) to 55 (131°F)
Manual override	Non-locking/locking common (standard)
Pilot exhaust method: Internal pilot	Main valve/pilot valve common exhaust
Lubrication (*1)	Not required
Degree of protection (*2)	Dust-proof
Vibration resistance m/s^2	50 or less
Shock resistance m/s^2	300 or less
Atmosphere	Cannot be used in corrosive gas environments

*1 Use turbine oil Class 1 ISO VG32 for lubrication. Excessive or intermittent lubrication results in unstable operation.
*2 Avoid dripping water or oil, etc., during use.
IP65 (jet-proof) applies for DIN terminal box specifications. However, the specified outer diameter of the applicable cord and tightening torque must be used for fixing in place.

Electrical specifications

Item	Description			
Rated voltage V	24 DC	12 DC	100 AC	200 AC
Voltage fluctuation range	±10%			
Holding current A (*3)	0.015 (0.017)	0.030 (0.034)	0.009 (0.009)	0.006 (0.006)
Power consumption W (*3)	0.35(0.40)		-	
Apparent power VA (*3) (*4)	-		0.93 (0.98)	1.40
Thermal class	B			
Surge suppressor	Option			
Indicator	Lamp (option)			

*3 Values in ( ) apply when lamp is included.
*4 200 VAC is the value of DIN terminal box (with lamp).

Individual specifications

Item		3GE1/4GE1	3GE2/4GE2	4GE3
Port size	A/B port	Rc1/8	Rc1/4	Rc1/4, Rc3/8
	P/R1/R2 port	Rc1/8	Rc1/4	Rc1/4, Rc3/8

Performance/characteristics by model

Item			3GE1/4GE1		3GE2/4GE2		4GE3	
			ON	OFF	ON	OFF	ON	OFF
Response time ms	Two 3-port valves integrated		12	15	15	30	-	-
	2-position	Single	15	25	20	30	25	40
		Double	15	-	20	-	25	-
	3-position	ABR connection	20	30	25	35	35	50

Values with a lamp/surge suppressor are shown. The response time is the value with supply pressure of 0.5 MPa at 20°C and without lubrication. It depends on the pressure and the lubricant quality.

Weight

Item				3GE1/4GE1	3GE2/4GE2	4GE3
Weight g	2-position	Single	Grommet lead wire	80(38)	158(76)	221(102)
			E-connector	82(40)	160(78)	223(104)
			DIN terminal box	-	195(113)	255(136)
		Double	Grommet lead wire	97(55)	175(93)	240(121)
			E-connector	101(59)	179(97)	244(125)
			DIN terminal box	-	218(136)	280(161)
	3-position	All ports closed	Grommet lead wire	98(56)	186(104)	249(130)
			E-connector	102(60)	190(108)	253(134)
			DIN terminal box	-	229(147)	289(170)

- Values in ( ) do not include the pipe adaptor. Values for the E-connector include the socket assembly (with 300 mm lead wire).For the EJ-connector, add 16 g/connector to the E-connector weight.
- The weight of the two 3-port valves integrated type is the same as that of 2-position double.

Flow characteristics

Model No.	Solenoid position		P → A/B		A/B→R1/R2	
			C[dm³/(s·bar)]	b	C[dm³/(s·bar)]	b
3GE1 4GE1	Two 3-port valves integrated		0.92	0.08	1.1	0.26
	2-position		1.3	0.27	1.2	0.22
	3-position	All ports closed	1.1	0.31	1.1	0.27
		ABR connection	1.1	0.31	1.3	0.29
		PAB connection	1.4	0.30	1.1	0.26
3GE2 4GE2	Two 3-port valves integrated		1.7	0.42	2.1	0.26
	2-position		2.6	0.20	2.6	0.19
	3-position	All ports closed	2.3	0.32	2.2	0.22
		ABR connection	2.2	0.23	2.6	0.16
		PAB connection	2.4	0.10	2.4	0.22
4GE3	2-position		4.3	0.24	4.2	0.24
	3-position	All ports closed	3.3	0.40	3.4	0.27
		ABR connection	3.3	0.36	4.2	0.18
		PAB connection	4.5	0.28	3.4	0.30

*1: Formula to calculate sonic conductance C from effective cross-sectional area S is S≈5.0xC.

Ozone-proof specifications • Coolant proof specifications

Can be selected with "How to order" Item Ⓔ option "A" on page 484.

Specifications for rechargeable battery (Catalog No. CC-1226A)

● For use in the rechargeable battery manufacturing process, materials used for air path and sliding section are limited

** - Voltage - **P4**

CE marking specifications

** - Voltage - **ST**

- Standard voltage of 24 VDC or less is CE marking-compatible even if the model No. is not indicated with "ST".

How to order

● Discrete valve

4GE1 1 0 R - 06 - E2 □□ - 3

3GE1 66 0 R - 06 - E2 □□ - 3

● Discrete valve for mounting base

4GE1 1 9 R - 00 - E2 H □ - 3

3GE1 66 9 R - 00 - E2 H C - 3

Ⓑ Solenoid position

Ⓐ Model No.

Ⓒ Port size

Ⓓ Electrical connections
Refer to page 441 for the circuit diagram with surge suppressor/lamp.

Ⓔ Option

Ⓕ Pilot exhaust method

Ⓖ Voltage

Code	Description	Ⓐ Model No. 3GE1	3GE2	4GE1	4GE2	4GE3
Ⓑ Solenoid position						
1	2-position single			●	●	●
2	2-position double			●	●	●
3	3-position all ports closed			●	●	●
4	3-position ABR connection			●	●	●
5	3-position PAB connection			●	●	●
66	Two 3-port valves integrated (*1) — A side valve: Normally closed / B side valve: Normally closed	●	●			
Ⓒ Port size						
Port	4(A)/2(B) port	P/R1/R2 port ② =Rc1/8 ③ =Rc1/4 ④ =Rc3/8				
06	Rc1/8	②		②		
08	Rc1/4		③		③	③
10	Rc3/8					④
00	Discrete valve for mounting base	●	●	●	●	●
Ⓓ Electrical connections						
Blank	Grommet lead wire (300 mm) (*5)	●	●	●	●	●
B	DIN terminal box (Pg7) With surge suppressor/lamp (*6) (*8)		●		●	●
BN	DIN term. box (Pg7) (no terminal box) + surge suppressor (*6) (*8)		●		●	●
E-connector (upward/lateral common)						
E0	Lead wire (300 mm) (*7)	●	●	●	●	●
E00	Lead wire (500 mm) (*7)	●	●	●	●	●
E01	Lead wire (1000 mm) (*7)	●	●	●	●	●
E02	Lead wire (2000 mm) (*7)	●	●	●	●	●
E03	Lead wire (3000 mm) (*7)	●	●	●	●	●
E0N	Without lead wire (without socket) (*7)	●	●	●	●	●
E1	Without lead wire (socket/terminal attached) (*7)	●	●	●	●	●
E2	Lead wire (300 mm), surge suppressor/indicator lamp	●	●	●	●	●
E20	Lead wire (500 mm), surge suppressor/indicator lamp	●	●	●	●	●
E21	Lead wire (1000 mm), surge suppressor/indicator lamp	●	●	●	●	●
E22	Lead wire (2000 mm), surge suppressor/indicator lamp	●	●	●	●	●
E23	Lead wire (3000 mm), surge suppressor/indicator lamp	●	●	●	●	●
E2N	No lead wire (without socket), surge suppressor/indicator lamp	●	●	●	●	●
E3	No lead wire (with socket/terminal), surge suppressor/indicator lamp	●	●	●	●	●
EJ type connector (socket with cover, upward/lateral common)						
E01J	Lead wire (1000 mm) (*7)	●	●	●	●	●
E02J	Lead wire (2000 mm) (*7)	●	●	●	●	●
E03J	Lead wire (3000 mm) (*7)	●	●	●	●	●
E21J	Lead wire (1000 mm), surge suppressor/indicator lamp	●	●	●	●	●
E22J	Lead wire (2000 mm), surge suppressor/indicator lamp	●	●	●	●	●
E23J	Lead wire (3000 mm), surge suppressor/indicator lamp	●	●	●	●	●
Ⓔ Option						
Blank	Non-locking/locking common manual override	●	●	●	●	●
H	With exhaust check valve (*2)	●	●	●	●	●
A	Ozone/coolant proof	●	●	●	●	●
F	A/B-port filter built in (*3)	●	●	●	●	●
Ⓕ Pilot exhaust method						
Blank	Common exhaust (pilot exhaust check valve built-in)	●	●	●	●	●
C	Atmosphere release	○	○	○	○	○
Ⓖ Voltage						
1	100 VAC (rectifier integrated)	●	●	●	●	●
2	200 VAC (rectifier integrated) (*4)		●		●	●
3	24 VDC	●	●	●	●	●
4	12 VDC	●	●	●	●	●

is not available.

○ indicates a custom order.

⚠ Precautions for model No. selection

*1 : Dimensions are the same as the respective 2-position double solenoid.
*2 : 3-position all-port blocks and PAB connections are not provided with the exhaust check valve. Refer to page 851 for details on the exhaust check valve.
*3 : A filter is built into the P-port as standard.
*4 : DIN terminal box only is supported.
*5 : Grommet lead wire specifications are compatible with DC voltage only.
*6 : A lamp comes with the terminal box.
*7 : AC voltage is with a rectifier circuit.
*8 : The terminal box conforms to EN175301-803 Type C (former DIN 43650-C). Refer to pages 856 and 857 for details.

Electrical connections

Discrete valve/individual wiring manifold

Blank Grommet lead wire

● **Lead wire length**
300 mm

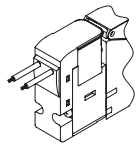

E1 E3 E-connector with socket/terminal

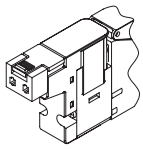

E0 E2 E-connector

● **Lead wire length**
300 mm
500 mm
1000 mm
2000 mm
3000 mm

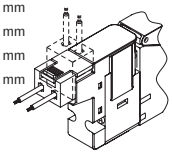

B DIN terminal box

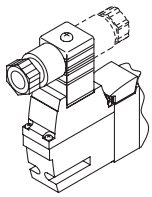

E0N E2N E-connector without socket

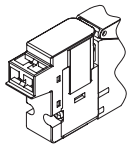

BN DIN terminal box without terminal box

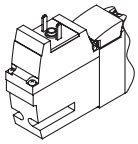

E0*J E2*J EJ type connector

● **Lead wire length**
1 m
2 m
3 m

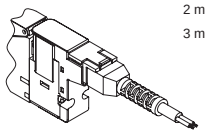

Internal structure and parts list

3GE1660R

● Two 3-port valves integrated
Grommet lead wire (blank)

Refer to page 488.

4GE110R

● 2-position single
Grommet lead wire (blank)

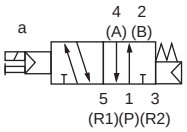

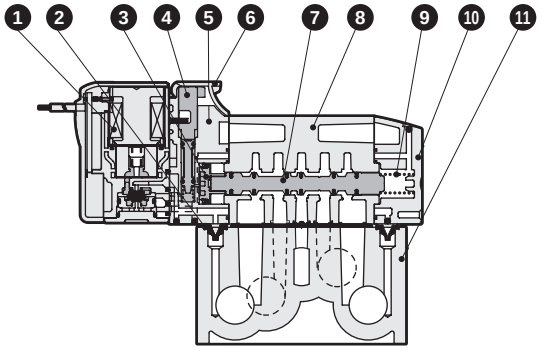

5(R1) 4(A) 1(P) 2(B) 3(R2)

4GE120R

● 2-position double
Grommet lead wire (blank)

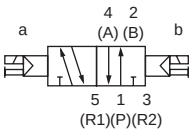

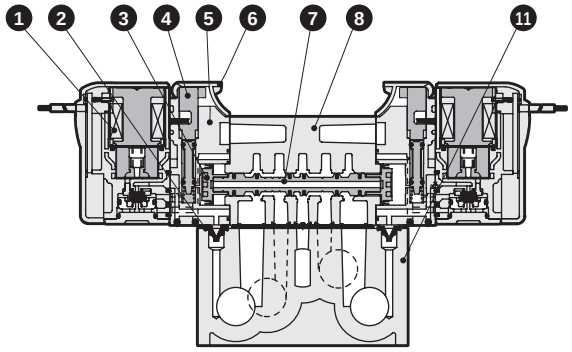

5(R1) 4(A) 1(P) 2(B) 3(R2)

4GE1$^{3}_{4}_{5}$0R

● 3-position
Grommet lead wire (blank)

All ports closed

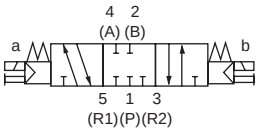

A/B/R connection

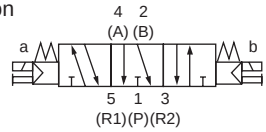

P/A/B connection

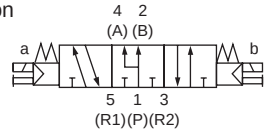

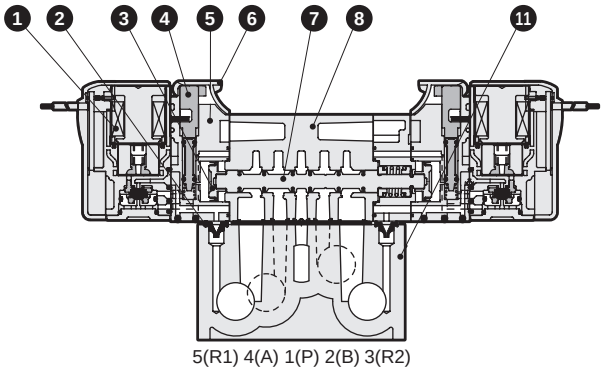

5(R1) 4(A) 1(P) 2(B) 3(R2)

Main parts list

No.	Part name	Material
1	Coil assembly	-
2	Pilot exhaust check valve	Hydrogenated nitrile rubber
3	Piston D assembly	-
4	Manual override	Resin
5	Piston chamber	Resin
6	Manual protection cover	Resin
7	Spool assembly	-
8	Body	Aluminum alloy die-casting
9	Spool spring	Stainless steel
10	Cap	Resin
11	Sub-plate	Aluminum alloy die-casting

Parts list

No.	Part name	Material
1	Coil assembly	4GR - electrical connections - □ - COIL - voltage Blank: Standard A: Ozone specifications Blank: Grommet lead wire

Internal structure and parts list

3GE2660R

● Two 3-port valves integrated
Grommet lead wire (blank)

Refer to page 488.

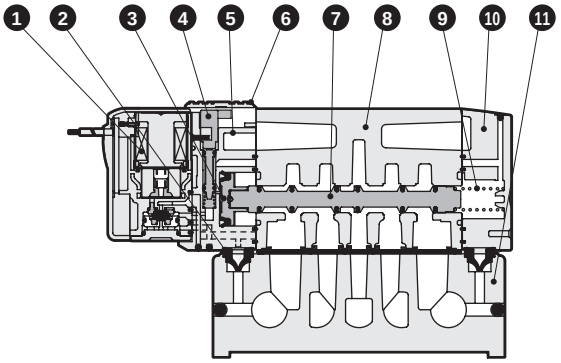

4GE210R/4GE310R

● 2-position single
Grommet lead wire (blank)

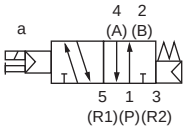

4GE220R/4GE320R

● 2-position double
Grommet lead wire (blank)

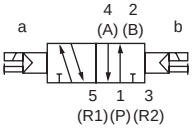

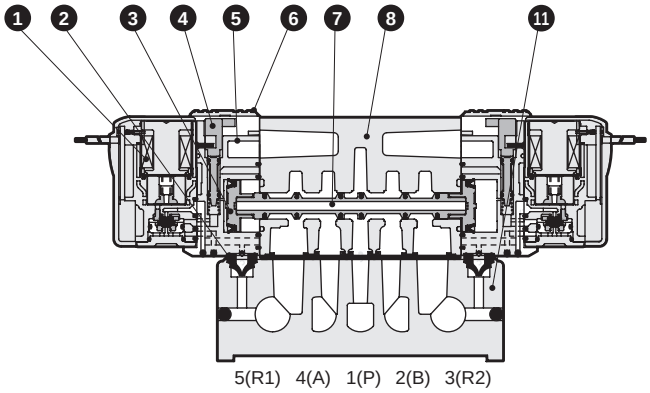

4GE2 $^{3}_{5}$0R/4GE3 $^{3}_{5}$0R

● 3-position
Grommet lead wire (blank)

All ports closed

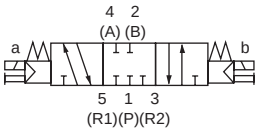

A/B/R connection

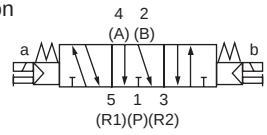

P/A/B connection

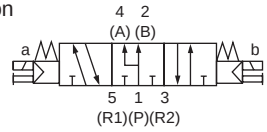

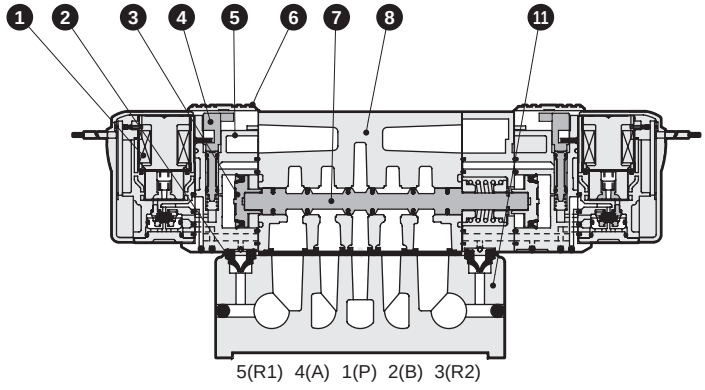

Main parts list

No.	Part name	Material
1	Coil assembly	-
2	Pilot exhaust check valve	Hydrogenated nitrile rubber
3	Piston D assembly	-
4	Manual override	Resin
5	Piston chamber	Resin
6	Manual protection cover	Resin
7	Spool assembly	-
8	Body	Aluminum alloy die-casting
9	Spool spring	Stainless steel
10	Cap	Resin
11	Sub-plate	Aluminum alloy die-casting

Parts list

No.	Part name	Material
1	Coil assembly	4GR - electrical connections - □ - COIL - voltage Blank: Standard A: Ozone specifications Blank: Grommet lead wire

Internal structure and parts list

3GE1660R

● Two 3-port valves integrated
Grommet lead wire (blank)
A side valve: normally closed,
B side valve: normally closed
NC/NC

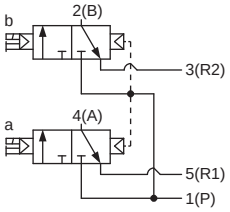

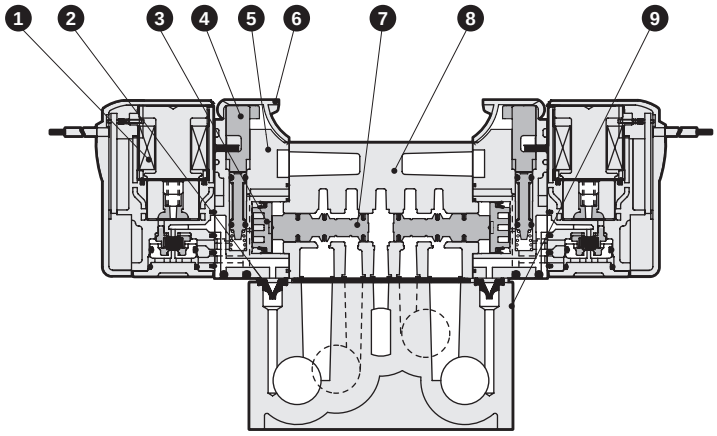

3GE2660R

● Two 3-port valves integrated
Grommet lead wire (blank)
A side valve: normally closed,
B side valve: normally closed
NC/NC

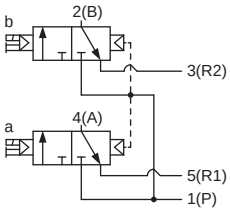

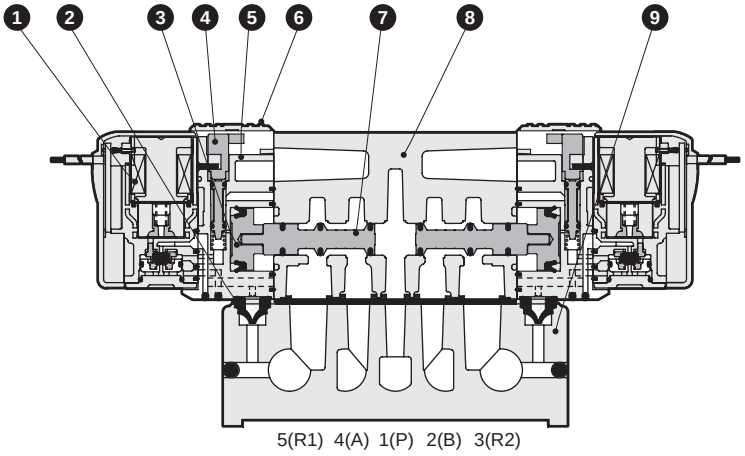

Main parts list

No.	Part name	Material
1	Coil assembly	-
2	Pilot exhaust check valve	Hydrogenated nitrile rubber
3	Piston assembly	-
4	Manual override	Resin
5	Piston chamber	Resin
6	Manual protection cover	Resin
7	Spool assembly	-
8	Body	Aluminum alloy die-casting
9	Sub-plate	Aluminum alloy die-casting

Parts list

No.	Part name	Material
1	Coil assembly	4GR - electrical connections - □ - COIL - voltage Blank: Standard A: Ozone specs Blank: Grommet lead wire

Electrical connections internal structure and parts list

● E-connector E□□

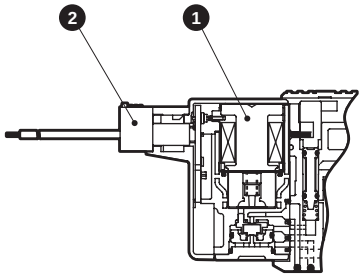

● EJ type connector E□□J

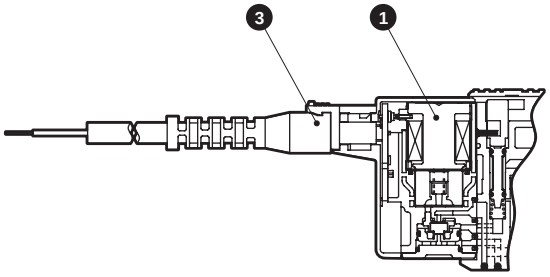

● DIN terminal box B

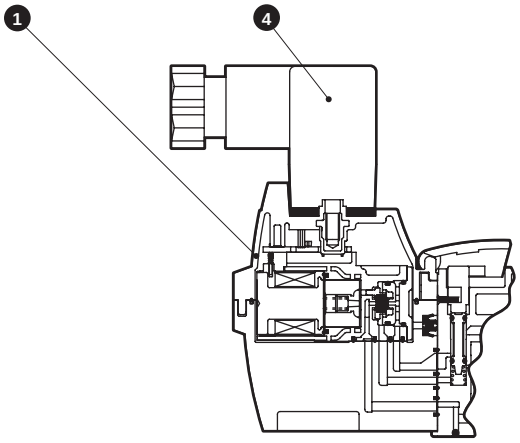

Main parts list

No.	Part name	Material
1	Coil assembly	
2	E-connector socket assembly	-
3	Socket assembly with cover	-
4	DIN terminal box assembly	-

Parts list

No.	Part name	Material
1	Coil assembly	4GR - electrical connections - □ - COIL - voltage Blank: Standard A: Ozone specifications E* : E-connector E*J : Socket with cover type B* : DIN terminal box B includes the DIN terminal box BN does not include the DIN terminal box
2	E-connector socket assembly	4GR-SOCKET-ASSY-E**-Voltage
3	Socket assembly with cover	4GR-SOCKET-ASSY-E**J
4	DIN terminal box assembly	4GR-TERMINAL-BOX-Voltage

Dimensions CAD

4GE110R

● 2-position single grommet lead wire (blank)

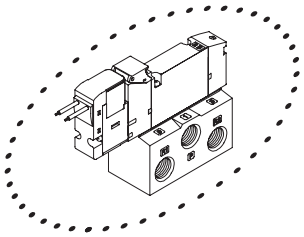

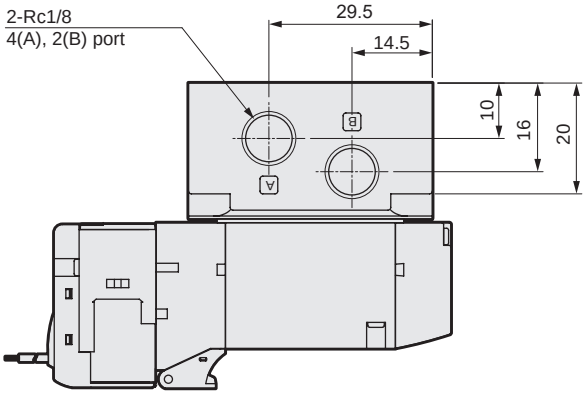

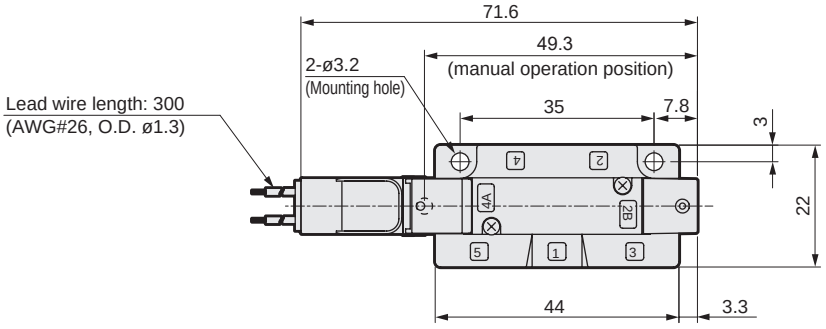

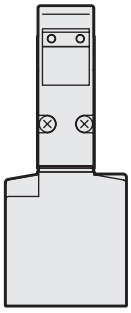

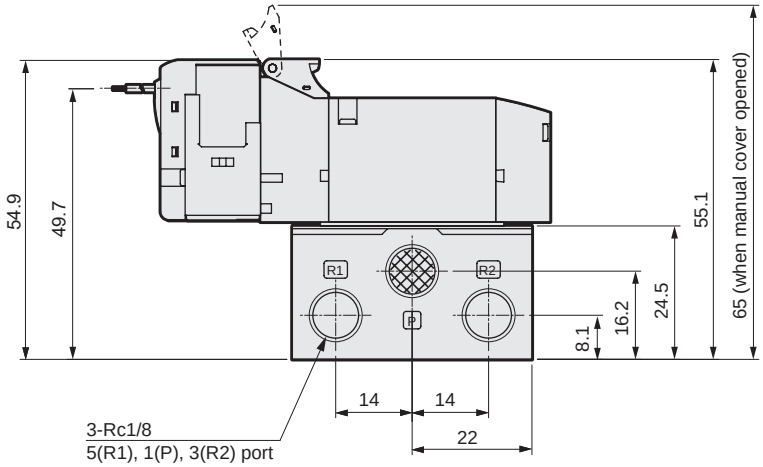

Dimensions

● E-connector (E)

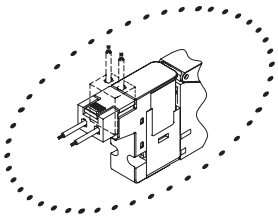

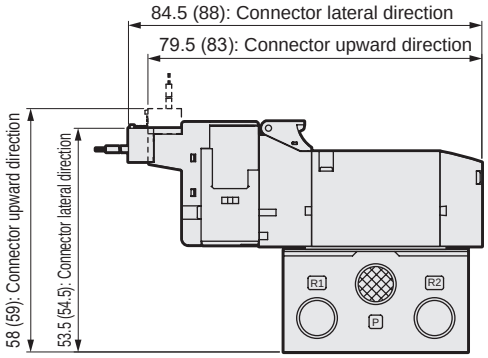

Note: Values in ( ) are for AC voltage.

● EJ type connector (E**J)

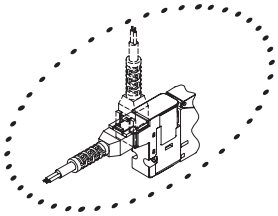

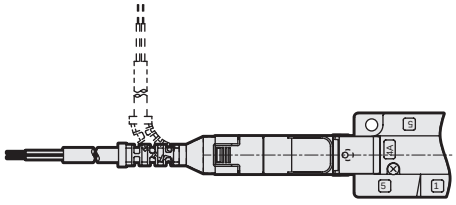

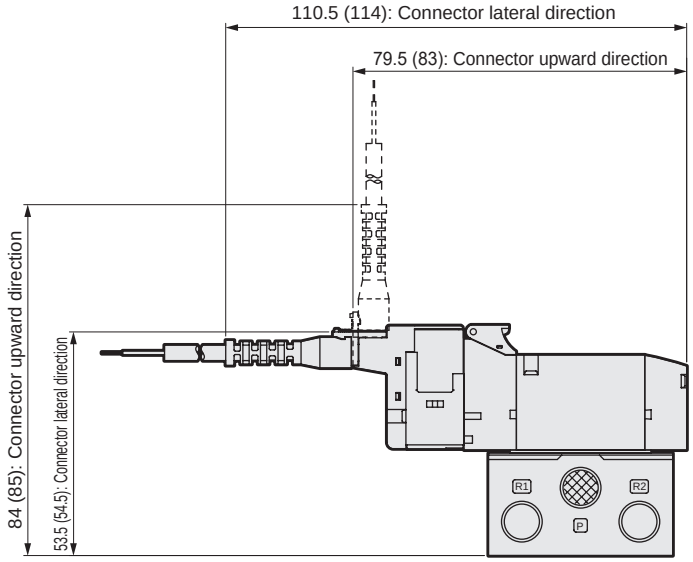

Note: Values in ( ) are for AC voltage.

Dimensions CAD

4GE120R

● 2-position double grommet lead wire (blank)

3GE1660R

● Two 3-port valves integrated grommet lead wire (blank)

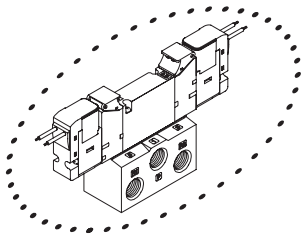

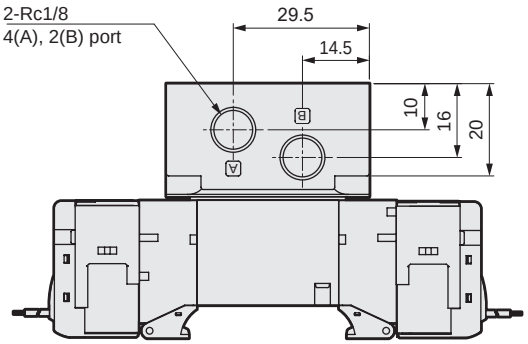

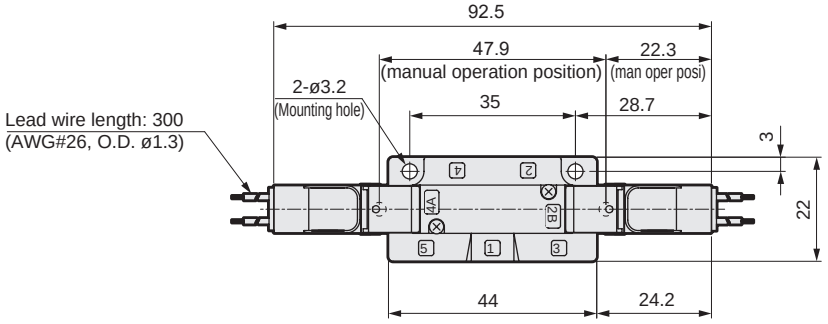

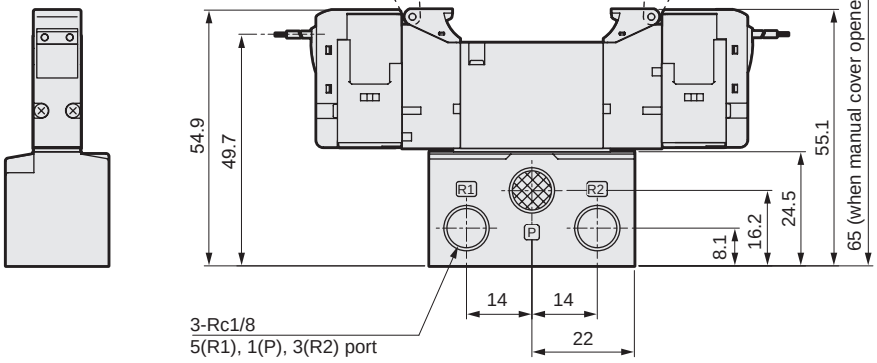

Dimensions

● E-connector (E)

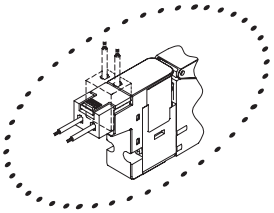

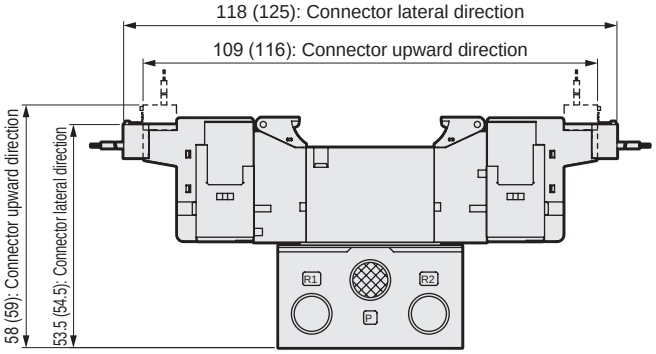

Note: Values in ( ) are for AC voltage.

● EJ type connector (E**J)

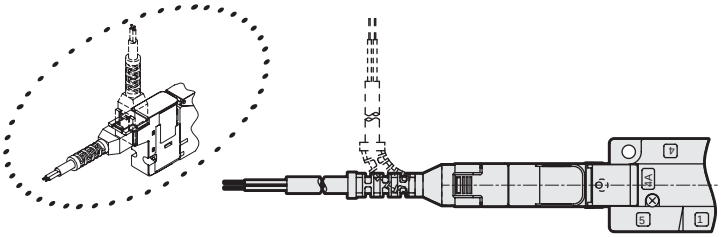

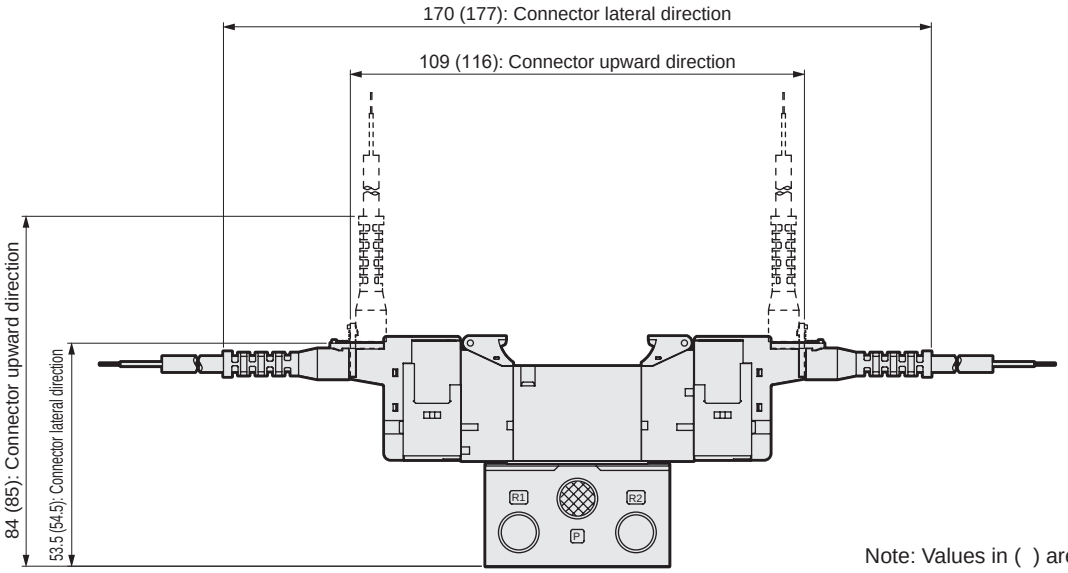

Note: Values in ( ) are for AC voltage.

Dimensions CAD

4GE1 3/4/5 0R

● 3-position grommet lead wire (blank)

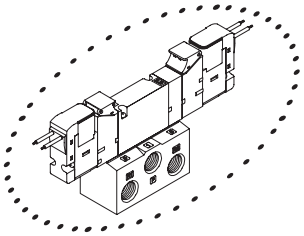

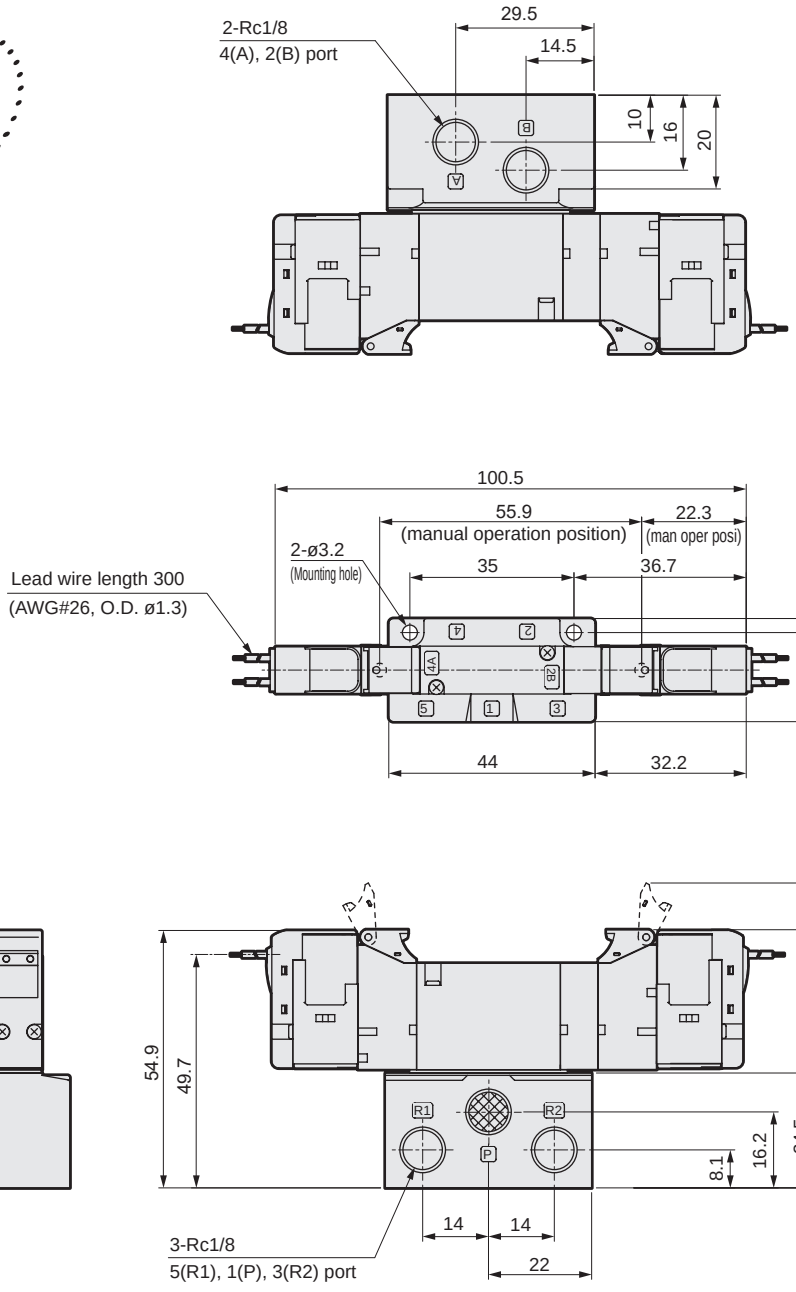

Dimensions

● E-connector (E)

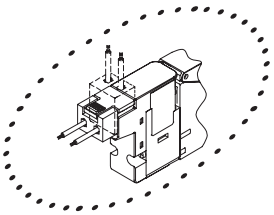

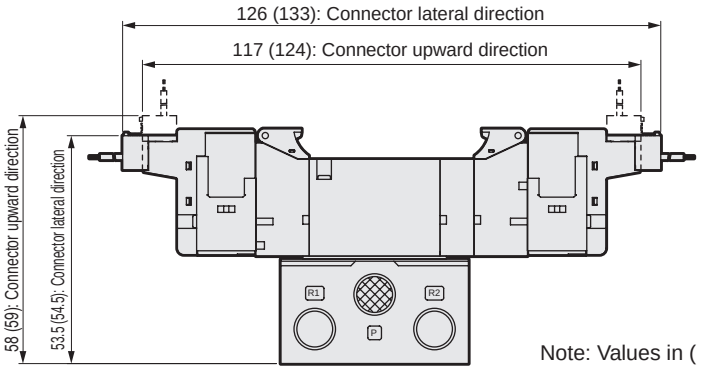

Note: Values in ( ) are for AC voltage.

● EJ type connector (E**J)

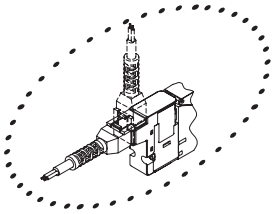

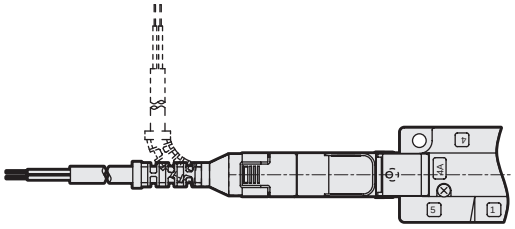

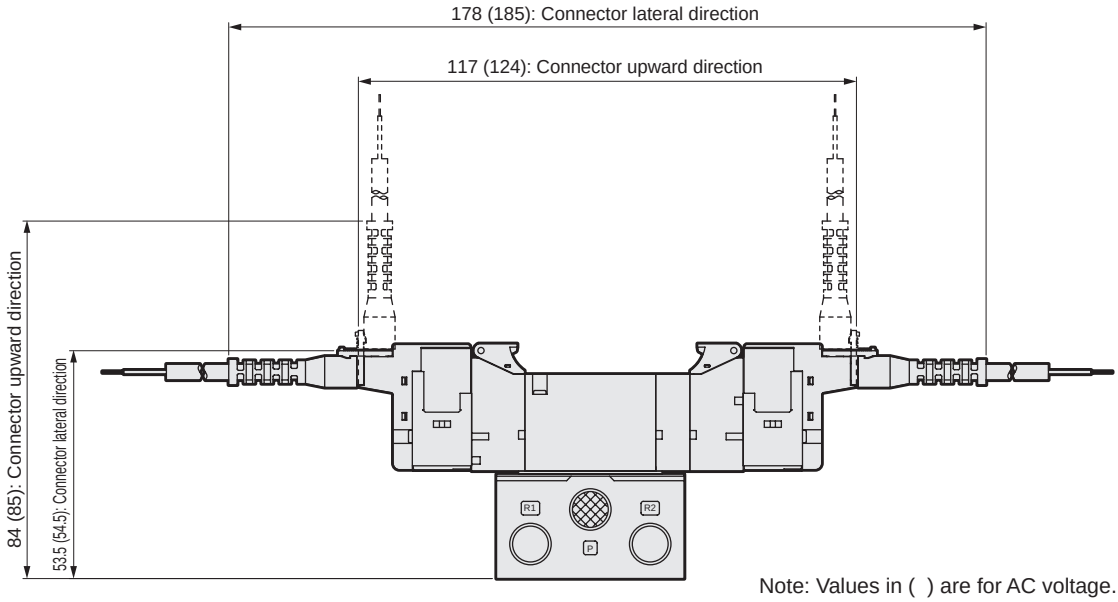

Note: Values in ( ) are for AC voltage.

Dimensions CAD

4GE210R

● 2-position single grommet lead wire (blank)

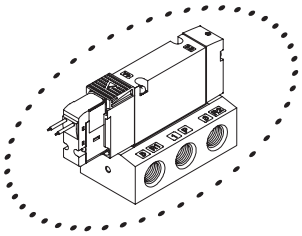

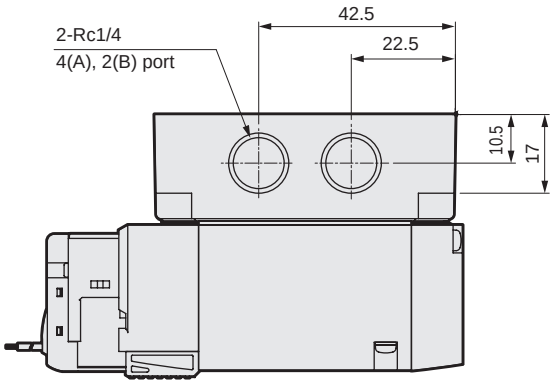

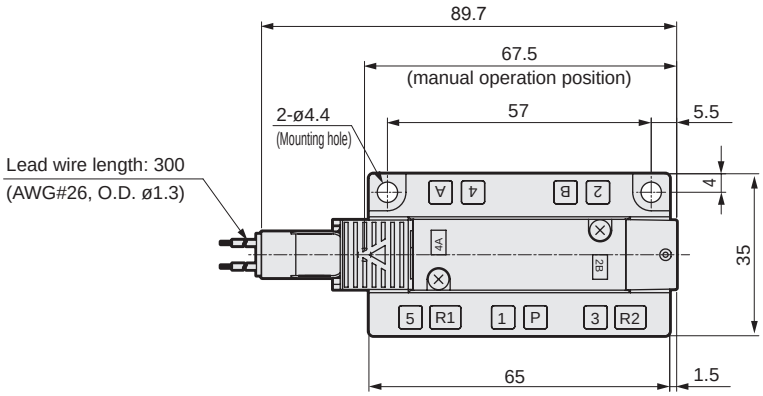

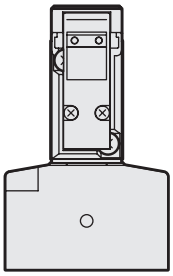

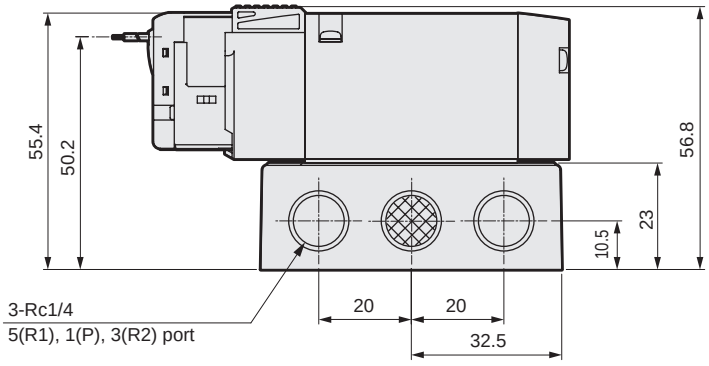

Dimensions

● E-connector (E)

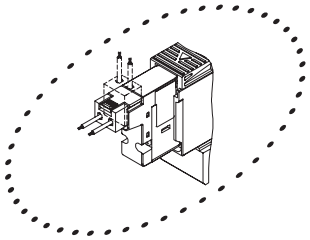

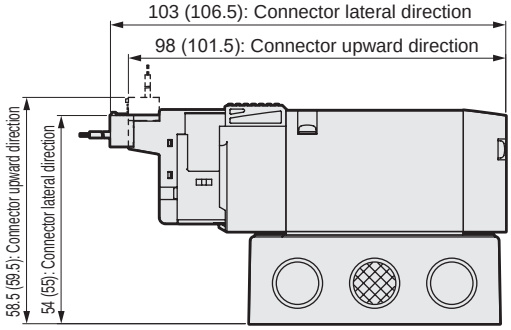

Note: Values in ( ) are for AC voltage.

● EJ type connector (E**J)

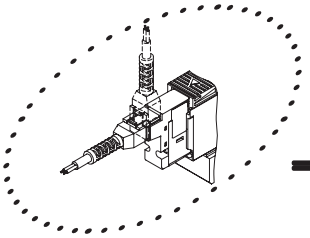

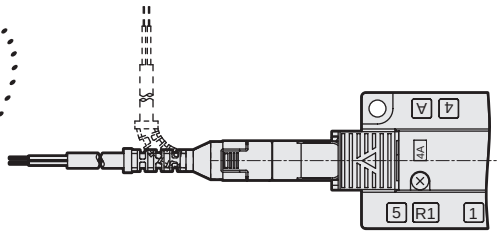

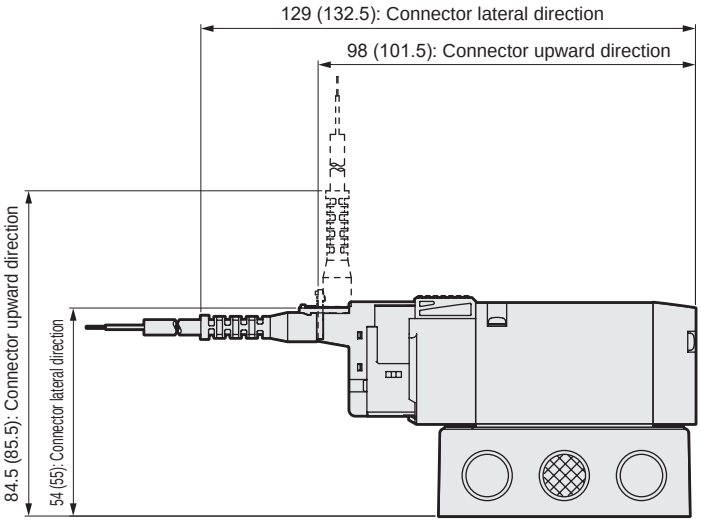

Note: Values in ( ) are for AC voltage.

● DIN terminal box (B)

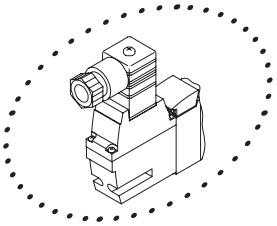

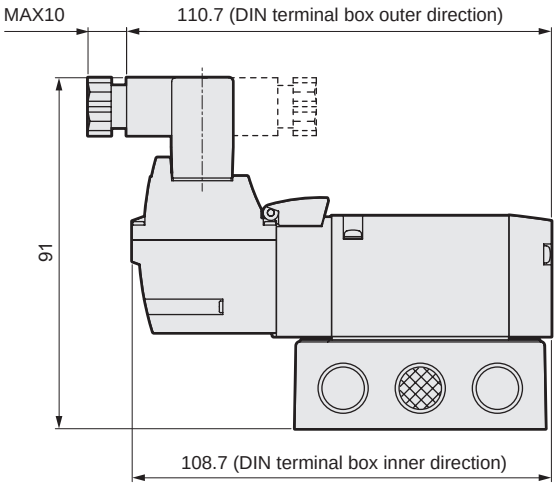

Note: DIN terminal box assembly is shipped facing inward.

Dimensions CAD

4GE220R

● 2-position double grommet lead wire (blank)

3GE2660R

● Two 3-port valves integrated grommet lead wire (blank)

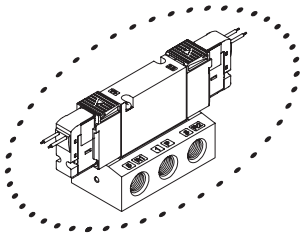

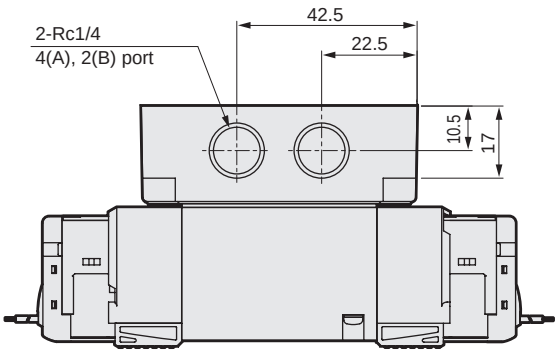

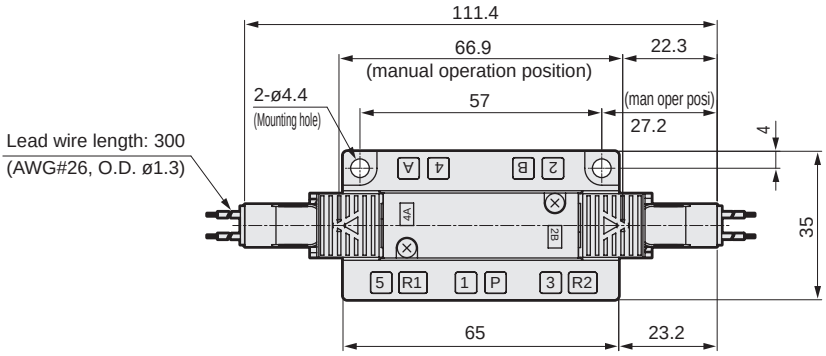

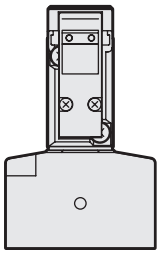

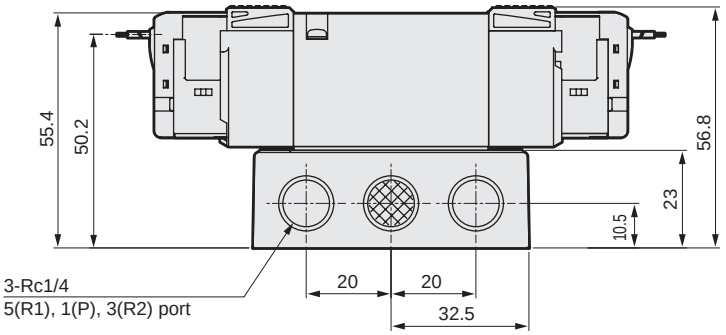

Dimensions

● E-connector (E)

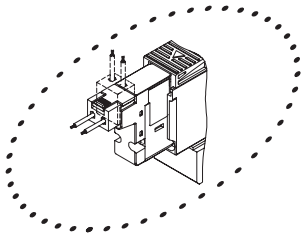

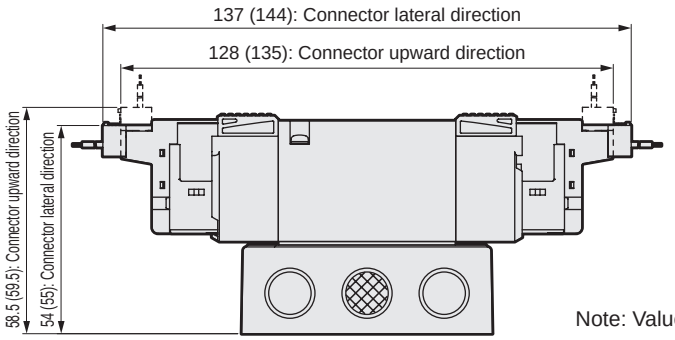

Note: Values in ( ) are for AC voltage.

● EJ type connector (E**J)

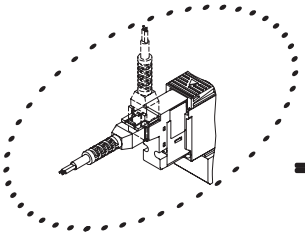

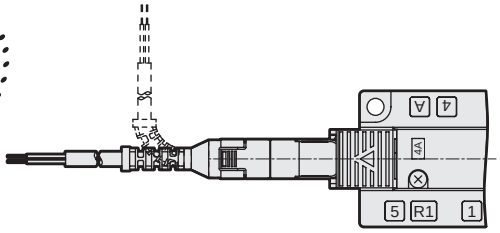

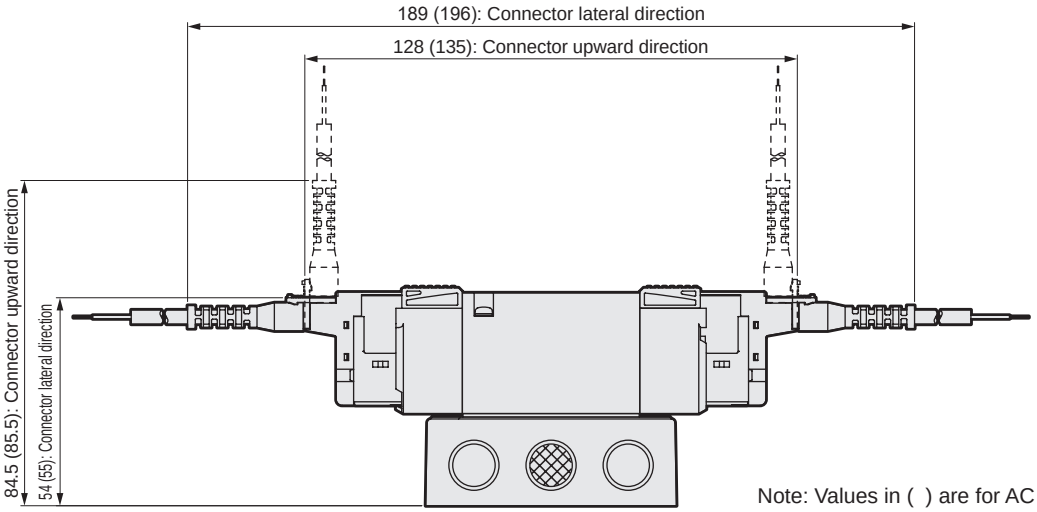

Note: Values in ( ) are for AC voltage.

● DIN terminal box (B)

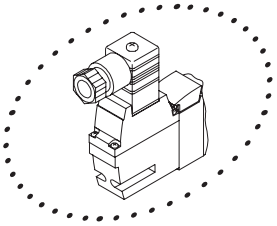

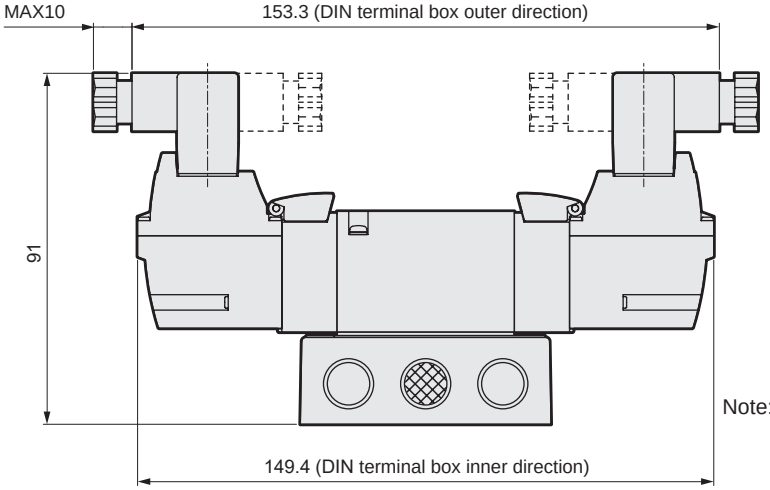

Note: DIN terminal box assembly is shipped facing inward.

Dimensions CAD

4GE2 $^{3}_{4}_{5}$0R

● 3-position grommet lead wire (blank)

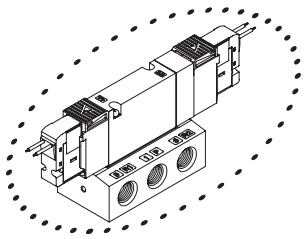

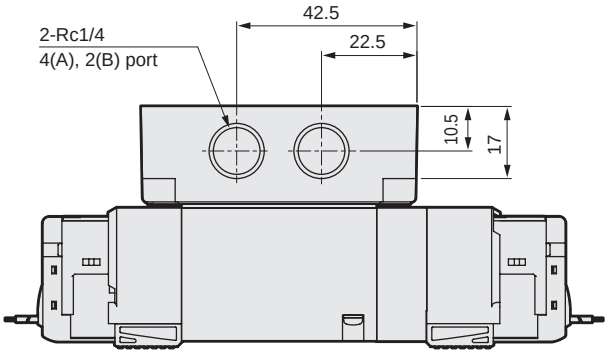

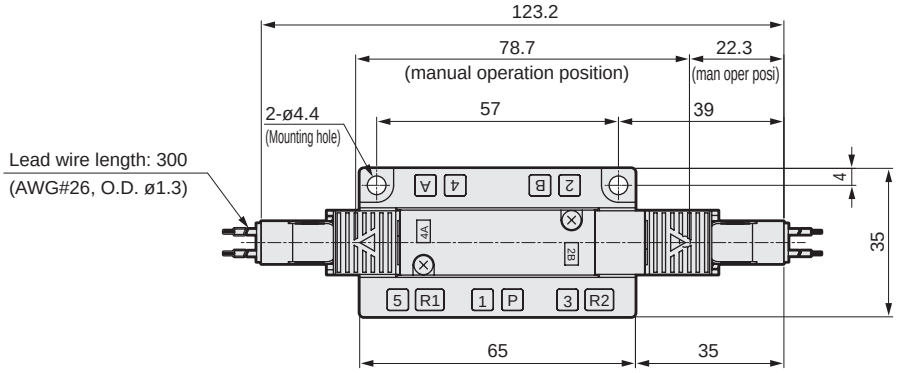

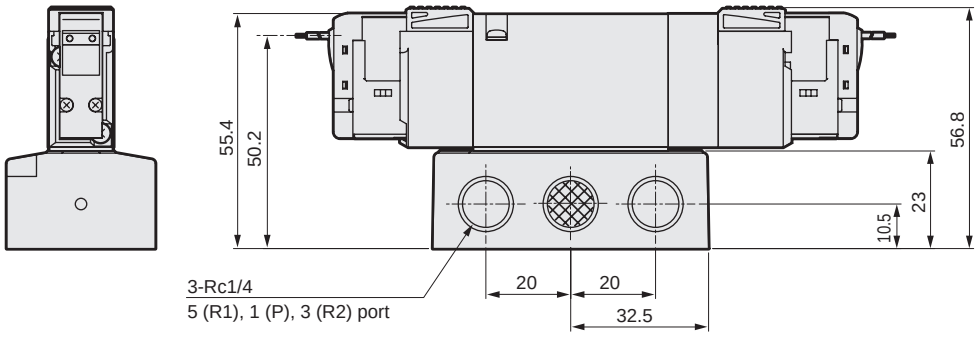

Dimensions

● E-connector (E)

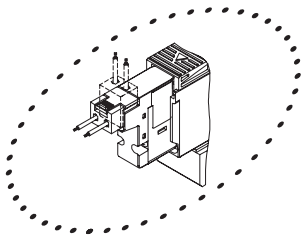

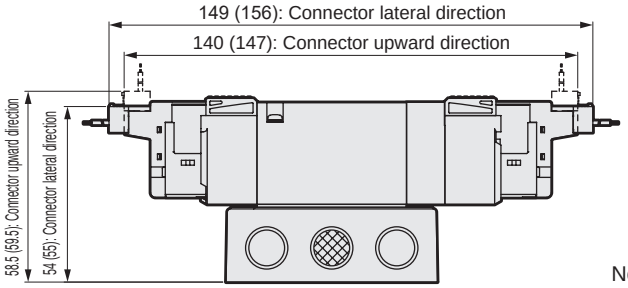

Note: Values in ( ) are for AC voltage.

● EJ type connector (E**J)

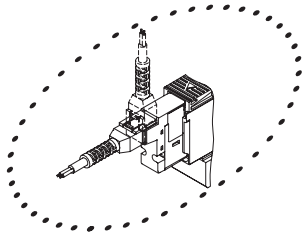

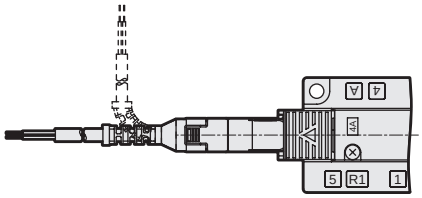

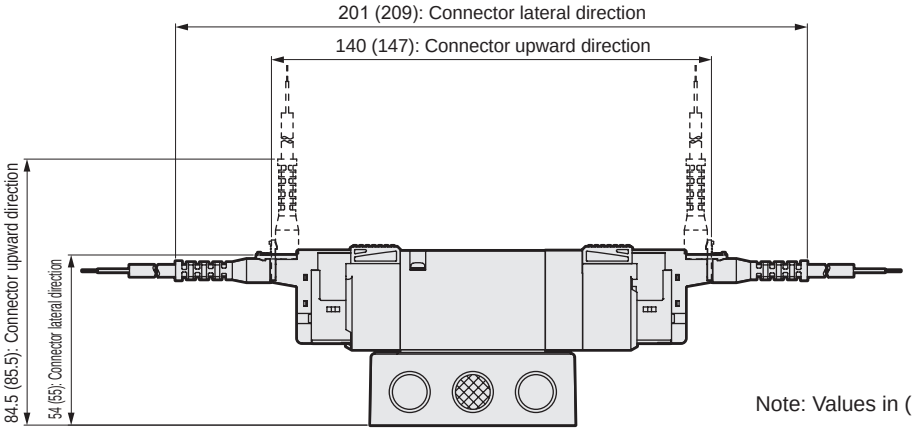

Note: Values in ( ) are for AC voltage.

● DIN terminal box (B)

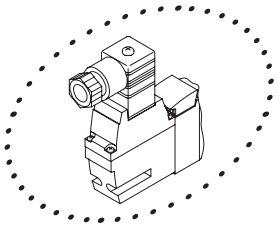

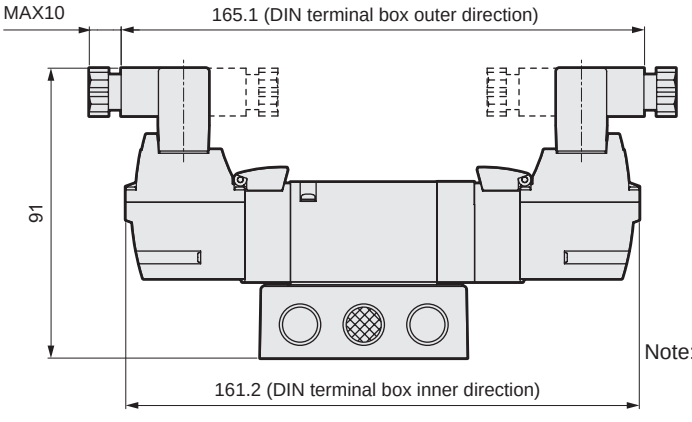

Note: DIN terminal box assembly is shipped facing inward.

Dimensions CAD

4GE310R

● 2-position single grommet lead wire (blank)

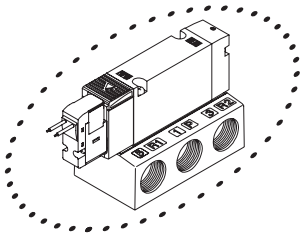

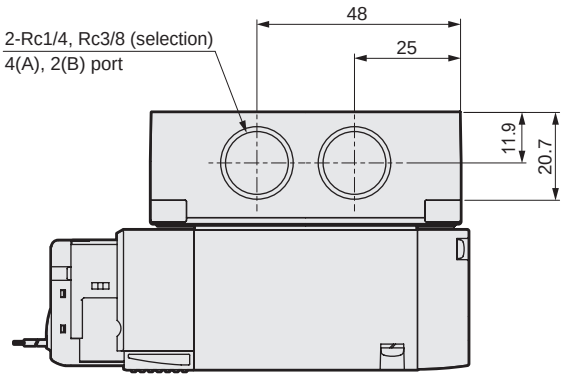

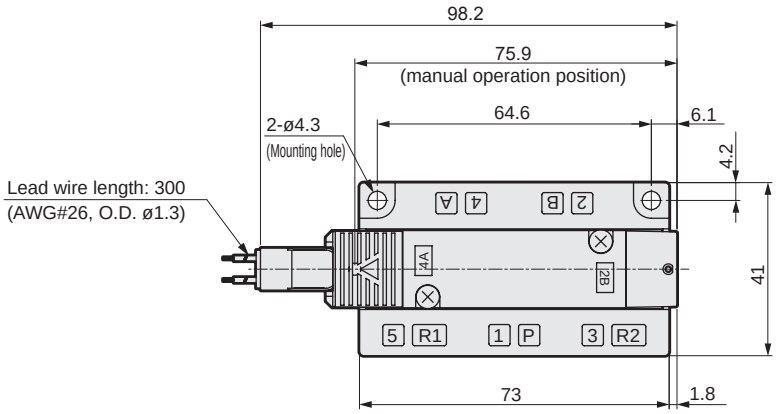

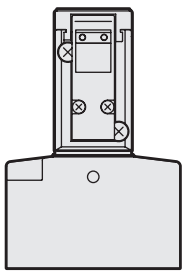

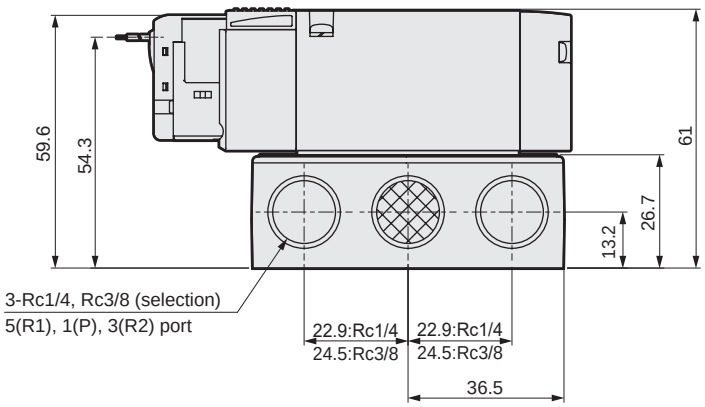

Dimensions

● E-connector (E)

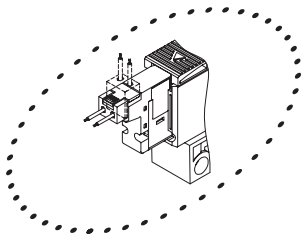

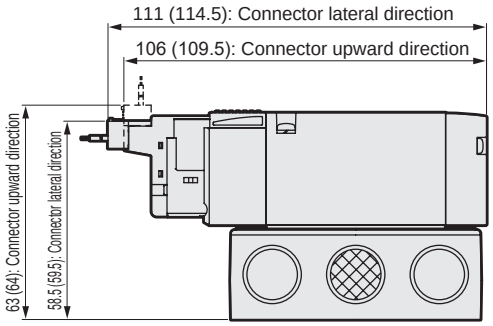

Note: Values in ( ) are for AC voltage.

● EJ type connector (E**J)

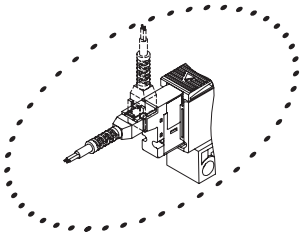

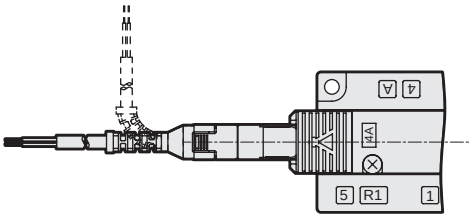

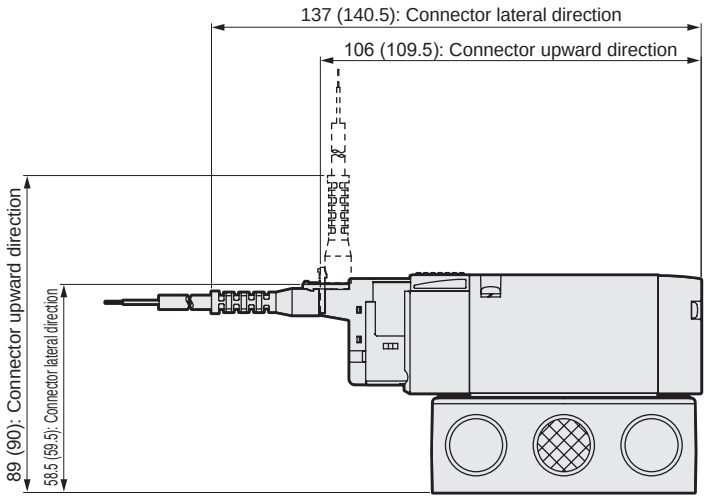

Note: Values in ( ) are for AC voltage.

● DIN terminal box (B)

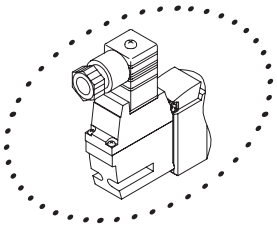

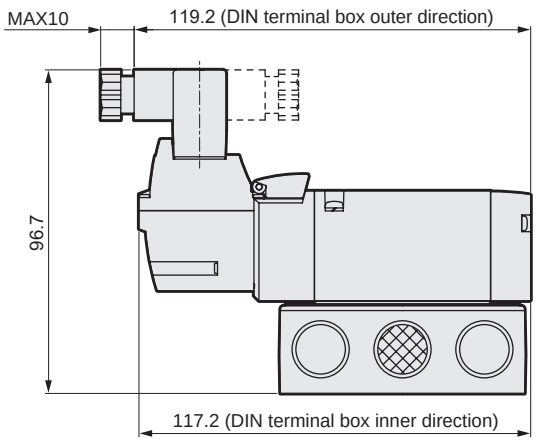

Note: DIN terminal box assembly is shipped facing inward.

Dimensions CAD

4GE320R

● 2-position double grommet lead wire (blank)

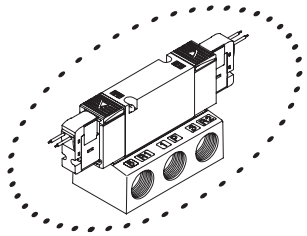

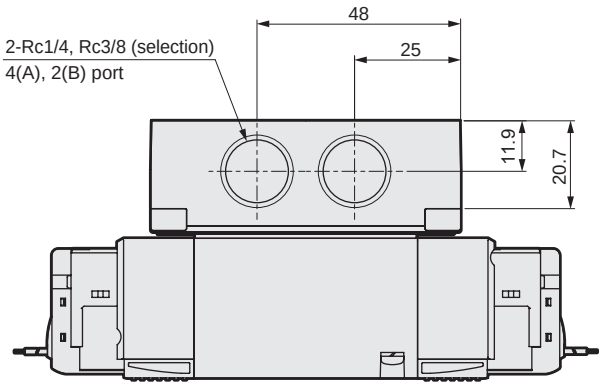

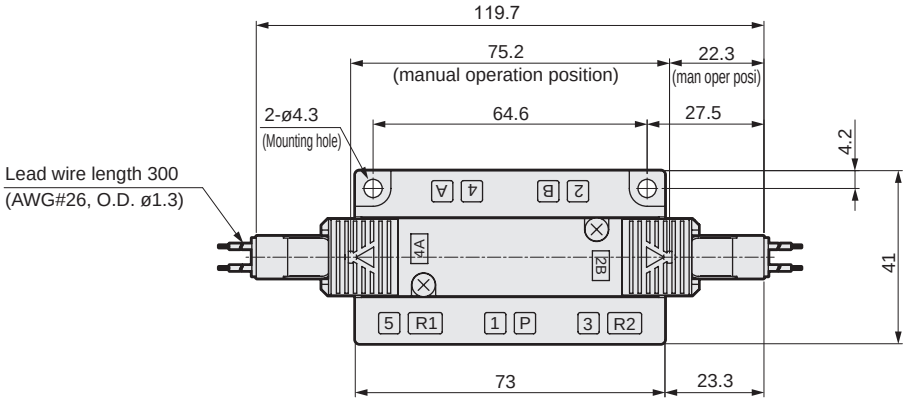

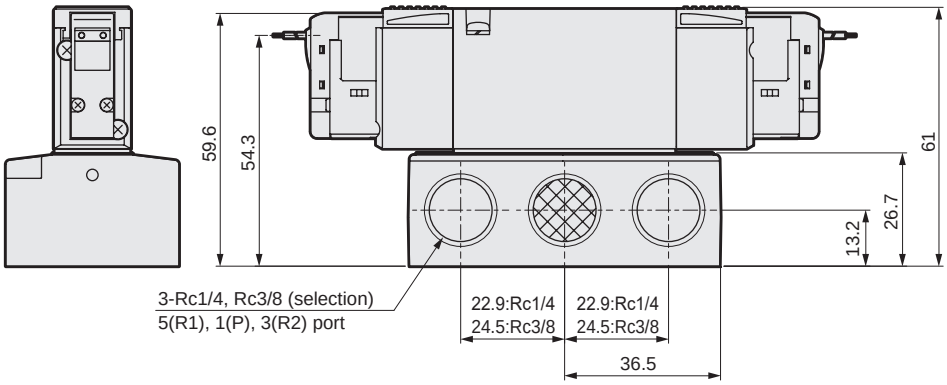

Dimensions

● E-connector (E)

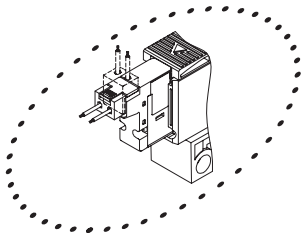

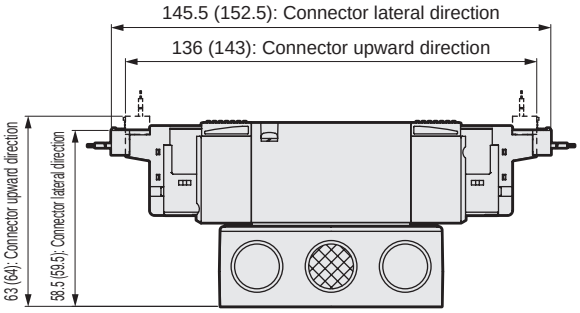

Note: Values in ( ) are for AC voltage.

● EJ type connector (E**J)

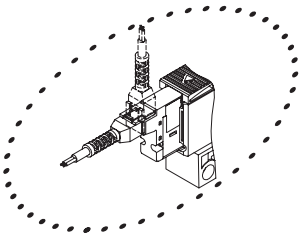

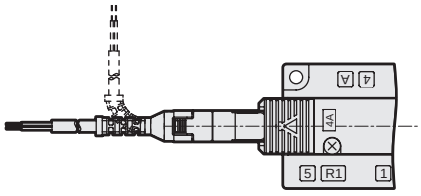

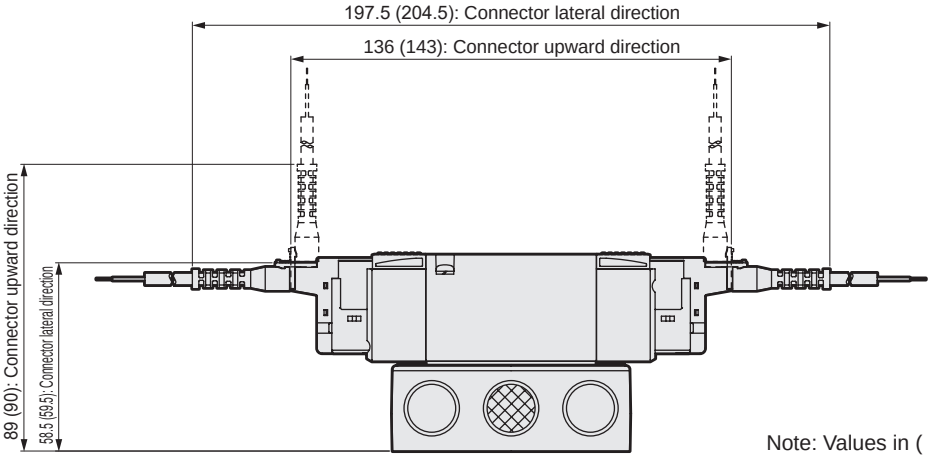

Note: Values in ( ) are for AC voltage.

● DIN terminal box (B)

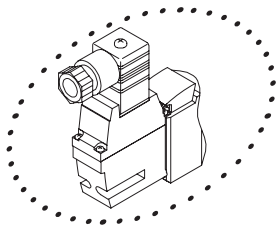

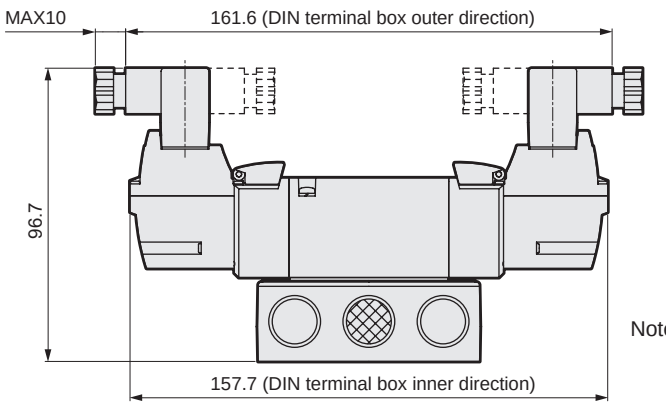

Note: DIN terminal box assembly is shipped facing inward.

Dimensions CAD

4GE3 $^{3}_{4}_{5}$0R

● 3-position grommet lead wire (blank)

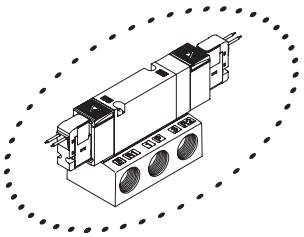

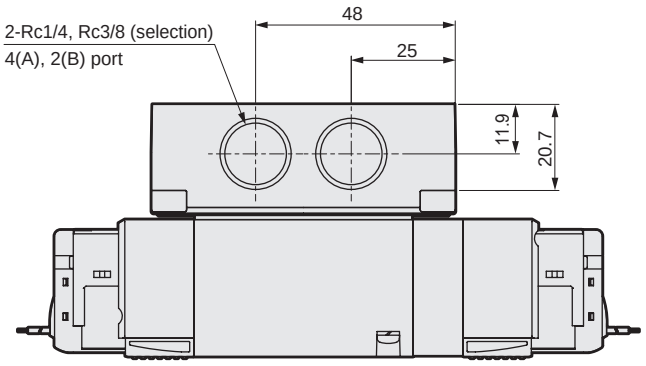

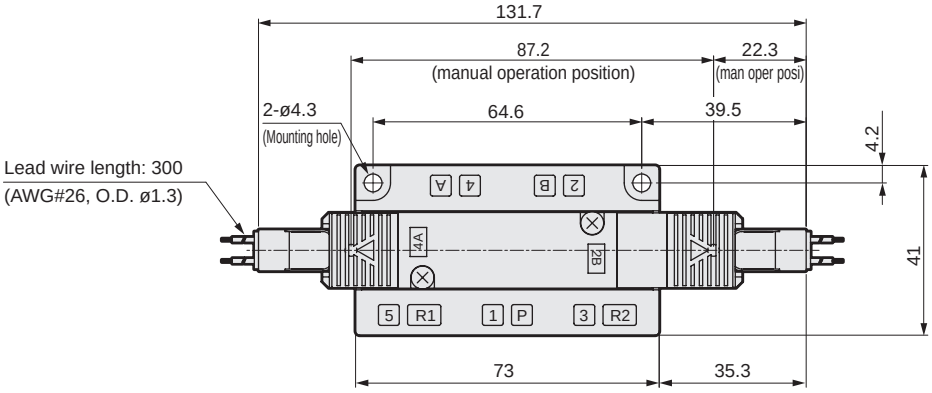

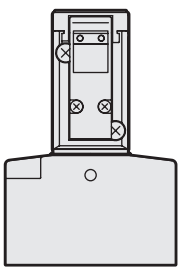

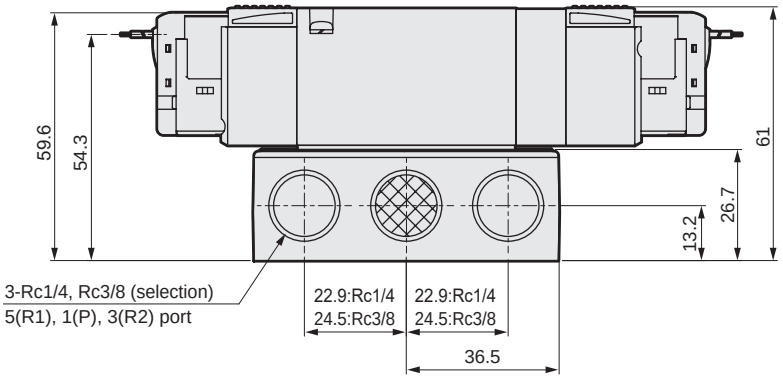

Dimensions

● E-connector (E)

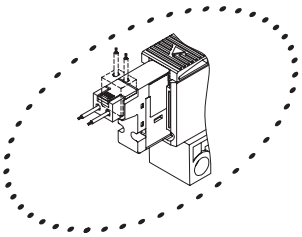

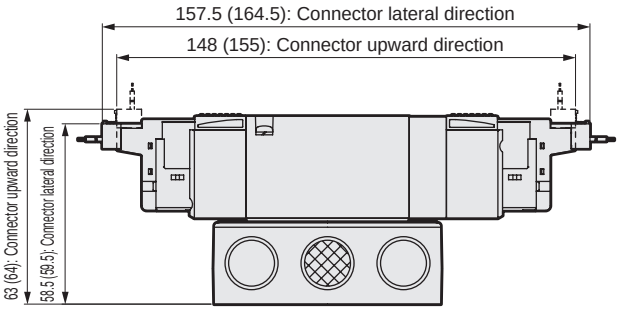

Note: Values in ( ) are for AC voltage.

● EJ type connector (E**J)

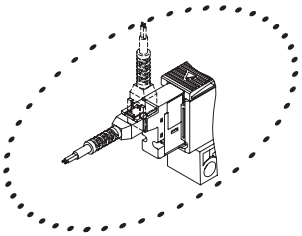

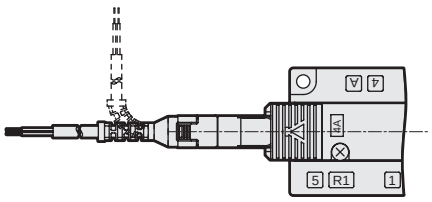

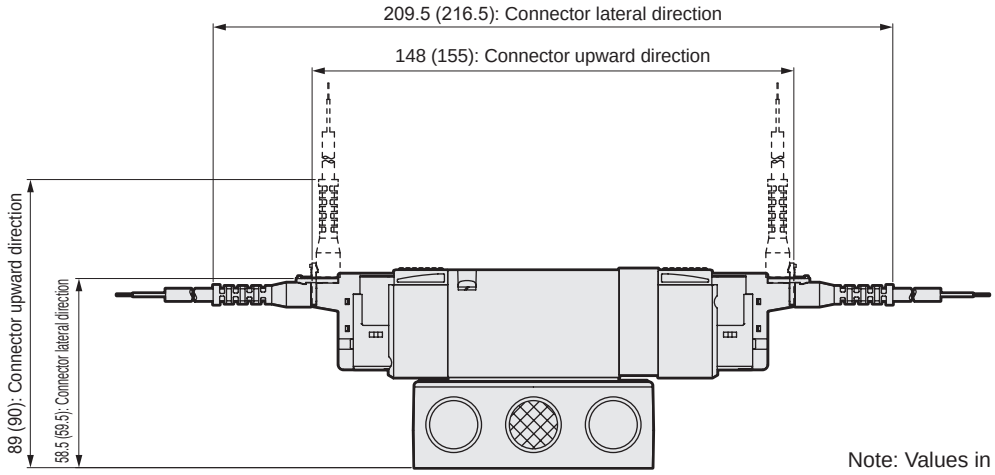

Note: Values in ( ) are for AC voltage.

● DIN terminal box (B)

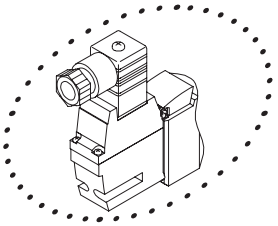

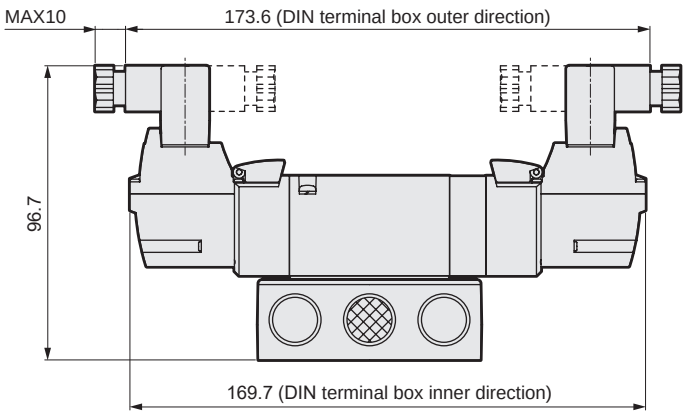

Note: DIN terminal box assembly is shipped facing inward.

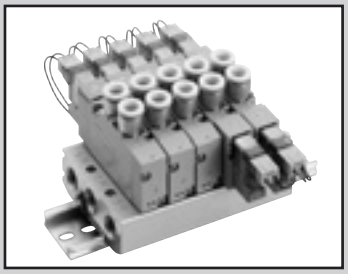

Individual wiring manifold
Body piping
Direct mount/DIN rail mount

M3GD1/2/3-(D) / M4GD1/2/3-(D) Series

● Cylinder bore size: ø20 to ø100

CE RoHS CAD

JIS symbol

● 3-port valve

2-position single NC

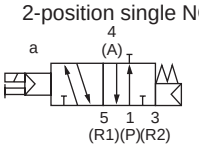

2-position single NO

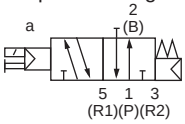

● Two 3-port valves integrated
(A side valve: NC, B side valve: NC)

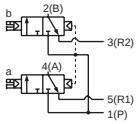

● 5-port valve

2-position single

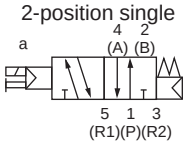

2-position double

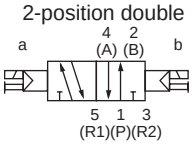

3-position all ports closed

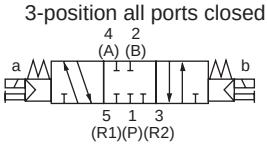

3-position A/B/R connection

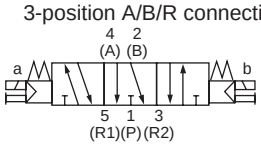

3-position P/A/B connection

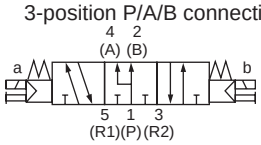

Manifold common specifications

Item		Description
Manifold		Integrated base
Mounting method		Direct mount/DIN rail mount
Supply and exhaust method		Common supply/common exhaust (With internal exhaust check valve)
Pilot exhaust method	Internal pilot	Main valve/pilot valve common exhaust (Standard) (Pilot exhaust check valve built-in)
Piping direction		Valve top direction
Valve and operation		Pilot operated soft spool valve
Working fluid		Compressed air
Max. working pressure	MPa	0.7 (≈100 psi, 7 bar)
Min. working pressure	MPa	0.2 (≈29 psi, 2 bar)
Proof pressure	MPa	1.05 (≈150 psi, 10.5 bar)
Ambient temperature	°C	-5 (23°F) to 55 (131°F) (no freezing)
Fluid temperature	°C	5 (41°F) to 55 (131°F)
Manual override		Non-locking/locking common
Lubrication	(*1)	Not required
Degree of protection	(*2)	Dust-proof
Vibration resistance	m/s^2	50 or less
Shock resistance	m/s^2	300 or less
Atmosphere		Cannot be used in corrosive gas environments

*1: Use turbine oil Class 1 ISO VG32 for lubrication. Excessive or intermittent lubrication results in unstable operation.
*2: Avoid dripping water or oil, etc., during use.
IP65 (jet-proof) applies for DIN terminal box specifications. However, the specified outer diameter of the applicable cord and tightening torque must be used for fixing in place.

Electrical specifications

Item			Description			
Rated voltage	V		24 DC	12 DC	100 AC	200 AC
Voltage fluctuation range			±10%			
Holding current	A	(*3)	0.015 (0.017)	0.030 (0.034)	0.009 (0.009)	0.006 (0.006)
Power consumption	W	(*3)	0.35 (0.40)		-	
Apparent power	VA	(*3) (*4)	-		0.93 (0.98)	1.40
Thermal class			B			
Surge suppressor			Option			
Indicator			Lamp (option)			

*3: Values in ( ) apply when lamp is included.
*4: 200 VAC is the value of DIN terminal box (with lamp).

Individual specifications

Item		M3GD1/M4GD1		M3GD2/M4GD2		M3GD3/M4GD3	
		Direct mount	DIN rail mount	Direct mount	DIN rail mount	Direct mount	DIN rail mount
Max. station No.	Standard (Internal pilot)	20 stations	16 stations	20 stations	16 stations	20 stations	16 stations
Port size	A/B port	Push-in fitting ø4, ø6 M5		Push-in fitting ø4, ø6, ø8 Rc1/8		Push-in fitting ø6, ø8, ø10 Rc1/4	
	P/R1/R2 port	Rc1/8		Rc1/4		Rc3/8	
Manifold base weight calculation formula (n: station No.) g		23n+52	25n+60	47n+64	49n+92	74n+88	76n+117

Refer to “Cautions for Mounting the DIN Rail” (page 854), and select the manifold.
For 10 or more manifold station No. (5 stations for 4G3), use ports on both side for air supply and exhaust.
The manifold base weight is the value for screw specifications.

Performance/characteristics by model

Item			M3GD1		M3GD2		M3GD3		M4GD1		M4GD2		M4GD3	
			ON	OFF	ON	OFF	ON	OFF	ON	OFF	ON	OFF	ON	OFF
Re-	Two 3-port valves integrated		12	15	15	30	-	-	-	-	-	-	-	-
sponse	2-position	Single	15	25	20	30	25	40	15	25	20	30	25	40
time		Double	-	-	-	-	-	-	15	-	20	-	25	-
ms	3-position	ABR connection	-	-	-	-	-	-	20	30	25	35	35	50

Values with lamp/surge suppressor are shown. The response times are values with working pressure of 0.5 MPa at 20°C, without lubrication. They depend on the pressure and the lubricant quality.

Flow characteristics

Model No.	Solenoid position		P → A/B		A/B→R1/R2			
			C[dm³/(s·bar)]	b	C[dm³/(s·bar)]		b	
M3GD1 M4GD1	Two 3-port valves integrated		0.86	0.31	1.1	(0.66)	0.19	(0.22)
	2-position		0.99	0.20	1.2	(0.70)	0.20	(0.12)
	3-position	All ports closed	0.94	0.23	1.1	—	0.20	—
		ABR connection	0.93	0.18	1.3	(0.70)	0.23	(0.02)
		PAB connection	1.1	0.28	1.1	—	0.23	—
M3GD2 M4GD2	Two 3-port valves integrated		1.7	0.40	2.3	(1.7)	0.29	(0.32)
	2-position		2.3	0.36	2.9	(1.7)	0.24	(0.33)
	3-position	All ports closed	2.1	0.35	2.5	—	0.32	—
		ABR connection	2.2	0.37	2.9	(1.8)	0.32	(0.29)
		PAB connection	2.4	0.34	2.5	—	0.33	—
M3GD3 M4GD3	2-position		3.2	0.37	3.8	(2.5)	0.13	(0.28)
	3-position	All ports closed	2.9	0.35	3.3	—	0.35	—
		ABR connection	3.0	0.34	3.8	(2.6)	0.12	(0.27)
		PAB connection	3.3	0.30	3.3	—	0.32	—

*1: Effective cross-sectional area S and sonic conductance C are converted as S ≈ 5.0 × C.
*2: Values in ( ) are with the exhaust check valve.

Ozone-proof specifications • Coolant proof specifications

Can be selected with “How to order” Item Ⓔ option “A” on page 510.

Specifications for rechargeable battery (Catalog No. CC-1226A)

● For use in the rechargeable battery manufacturing process, materials used for air path and sliding section are limited

** - Voltage - **P4**

CE marking specifications

** - Voltage - **ST**

• Standard voltage of 24 VDC or less is CE marking-compatible even if the model No. is not indicated with "ST".

How to order

Manifold model No.

M 4GD1 1 0 R- C6 - E2 H D ○ - ○ - 3

3-port manifold model No.

M 3GD1 1 0 R- C6 - E2 H D ○ - ○ - 3

Discrete valve for mounting base

4GD1 1 9 R- C6 - E2 H ○ — 3

Discrete 3-port valve for mounting base

3GD1 1 9 R- C6 - E2 H ○ — 3

Ⓑ Solenoid position

Ⓐ Model No.

Ⓒ Port size

Ⓓ Electrical connections

Ⓔ Option

Ⓕ Mount

Ⓖ Pilot exhaust method

Ⓗ Station No.

Ⓘ Voltage

* Be sure to fill in the "Manifold specifications sheet" (pages 594 to 596).

Code	Description	Ⓐ Model No. 3GD1	3GD2	3GD3	4GD1	4GD2	4GD3
Ⓑ Solenoid position							
1	2-position single				●	●	●
2	2-position double				●	●	●
3	3-position all ports closed				●	●	●
4	3-position ABR connection				●	●	●
5	3-position PAB connection				●	●	●
1	2-position single: Normally closed (*1)	●	●	●			
11	2-position single: Normally open (*1)	●	●	●			
66	Two 3-port valves integrated (*1) (*2) — A valve side: Normally closed, B valve side: Normally closed	●	●				
8	Mix manifold (when there are multiple solenoid positions)	●	●	●	●	●	●
Ⓒ Port size							
Port	4(A), 2(B) port	P/R1/R2 port (2) = Rc1/8 (3) = Rc1/4 (4) =Rc3/8					
C4	ø4 push-in fitting	(2)	(3)		(2)	(3)	
C6	ø6 push-in fitting	(2)	(3)	(4)	(2)	(3)	(4)
C8	ø8 push-in fitting		(3)	(4)		(3)	(4)
C10	ø10 push-in fitting			(4)			(4)
CX	Push-in fitting mix (*3)	(2)	(3)	(4)	(2)	(3)	(4)
M5	M5	(2)			(2)		
06	Rc1/8		(3)			(3)	
08	Rc1/4			(4)			(4)
Ⓓ Electrical connections							
Refer to the next page for electrical connections.							
Ⓔ Option							
Blank	Non-locking/locking common manual override	●	●	●	●	●	●
H	With exhaust check valve (*4)	●	●	●	●	●	●
A	Ozone/coolant proof	●	●	●	●	●	●
F	A/B port filter built in (*5)	●	●	●	●	●	●
Z1	Air supply spacer (*6)	●	●	●	●	●	●
Z2	In-stop valve spacer (*6)	●	●	●	●	●	●
Z3	Exhaust spacer (*6)	●	●	●	●	●	●
Ⓕ Mount							
Blank	Direct mount	●	●	●	●	●	●
D	DIN rail mount	●	●	●	●	●	●
Ⓖ Pilot exhaust method							
Blank	Common exhaust (pilot exhaust check valve built-in)	●	●	●	●	●	●
C	Atmosphere release (individual wiring only)	○	○	○	○	○	○
Ⓗ Station No.							
2	2 stations	●	●	●	●	●	●
to	to						
20	Refer to page 508 for the max. station number per model.						
Ⓘ Voltage							
1	100 VAC (rectifier integrated)	●	●	●	●	●	●
2	200 VAC (rectifier integrated) (*7)		●	●		●	●
3	24 VDC	●	●	●	●	●	●
4	12 VDC	●	●	●	●	●	●

is not available.

○ indicates a custom order.

⚠ Precautions for model No. selection

*1 : Select M4GD*80R when mixing with 3, 5-port valves.
Further, select M3GD*80R when mixing with masking plate.

*2 : Dimensions are the same as the respective 2-position double solenoid.

*3 : Push-in fitting cannot be mixed with the discrete valve 4(A) or 2(B) port.

*4 : 3-position all ports closed and PAB connection are not provided with the exhaust check valve specifications (H). Refer to page 851 for details on the exhaust check valve.

*5 : A filter is built into the P-port as standard.

*6 : Specify the spacer mounting position/ quantity in manifold specifications sheet. Stacking of spacers is not possible. Combination with the masking plate is not supported.
Refer to pages 576 to 580 for details.

*7 : DIN terminal box only is supported. Two 3-port valves integrated is not available.

[Electrical connections list]

Ⓓ Electrical connections			Ⓐ Model No. 3GD1	3GD2	3GD3	4GD1	4GD2	4GD3
Blank	Grommet lead wire (300 mm)	(*8)	●	●	●	●	●	●
B	DIN terminal box (Pg7) with surge suppressor and indicator lamp	(*9)(*11)		●	●		●	●
BN	DIN terminal box (Pg7) (without terminal box) with surge suppressor	(*9)(*11)		●	●		●	●
E-connector (upward/lateral direction common)								
E0	Lead wire (300 mm)	(*10)	●	●	●	●	●	●
E00	Lead wire (500 mm)	(*10)	●	●	●	●	●	●
E01	Lead wire (1000 mm)	(*10)	●	●	●	●	●	●
E02	Lead wire (2000 mm)	(*10)	●	●	●	●	●	●
E03	Lead wire (3000 mm)	(*10)	●	●	●	●	●	●
E0N	Without lead wire (without socket)	(*10)	●	●	●	●	●	●
E1	Without lead wire (with socket/terminal)	(*10)	●	●	●	●	●	●
E2	Lead wire (300 mm) with surge suppressor/indicator lamp		●	●	●	●	●	●
E20	Lead wire (500 mm) with surge suppressor/indicator lamp		●	●	●	●	●	●
E21	Lead wire (1000 mm) with surge suppressor/indicator lamp		●	●	●	●	●	●
E22	Lead wire (2000 mm) with surge suppressor/indicator lamp		●	●	●	●	●	●
E23	Lead wire (3000 mm) with surge suppressor/indicator lamp		●	●	●	●	●	●
E2N	No lead wire (without socket), surge suppressor/indicator lamp		●	●	●	●	●	●
E3	No lead wire (with socket/terminal), surge suppressor/indicator lamp		●	●	●	●	●	●
EJ type connector (socket with cover, upward/lateral direction common)								
E01J	Lead wire (1000 mm)	(*10)	●	●	●	●	●	●
E02J	Lead wire (2000 mm)	(*10)	●	●	●	●	●	●
E03J	Lead wire (3000 mm)	(*10)	●	●	●	●	●	●
E21J	Lead wire (1000 mm) with surge suppressor/indicator lamp		●	●	●	●	●	●
E22J	Lead wire (2000 mm) with surge suppressor/indicator lamp		●	●	●	●	●	●
E23J	Lead wire (3000 mm) with surge suppressor/indicator lamp		●	●	●	●	●	●

*8 : The grommet lead wire specifications are compatible with DC voltage only.
*9 : A lamp comes with the terminal box.
*10: AC voltage is with a rectifier circuit.
*11: The terminal box conforms to EN175301-803 Type C (former DIN 43650-C).
Refer to pages 856 and 857 for details.

Electrical connections

Discrete valve/individual wiring manifold

Blank Grommet lead wire

● **Lead wire length**
300 mm

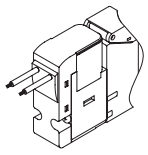

E1 E3 E connector with socket/terminal

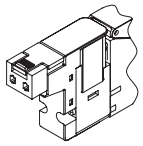

E0 E2 E connector

● **Lead wire length**
300 mm
500 mm
1000 mm
2000 mm
3000 mm

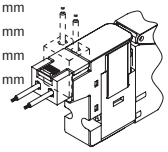

B DIN terminal box

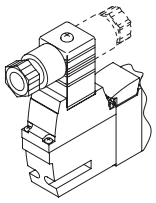

E0N E2N E connector without socket

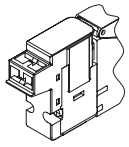

BN DIN terminal box (without terminal box)

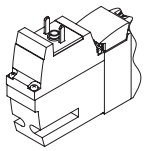

E0*J E2*J EJ connector

● **Lead wire length**
1000 mm
2000 mm
3000 mm

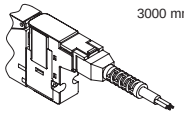

Manifold components explanation and parts list

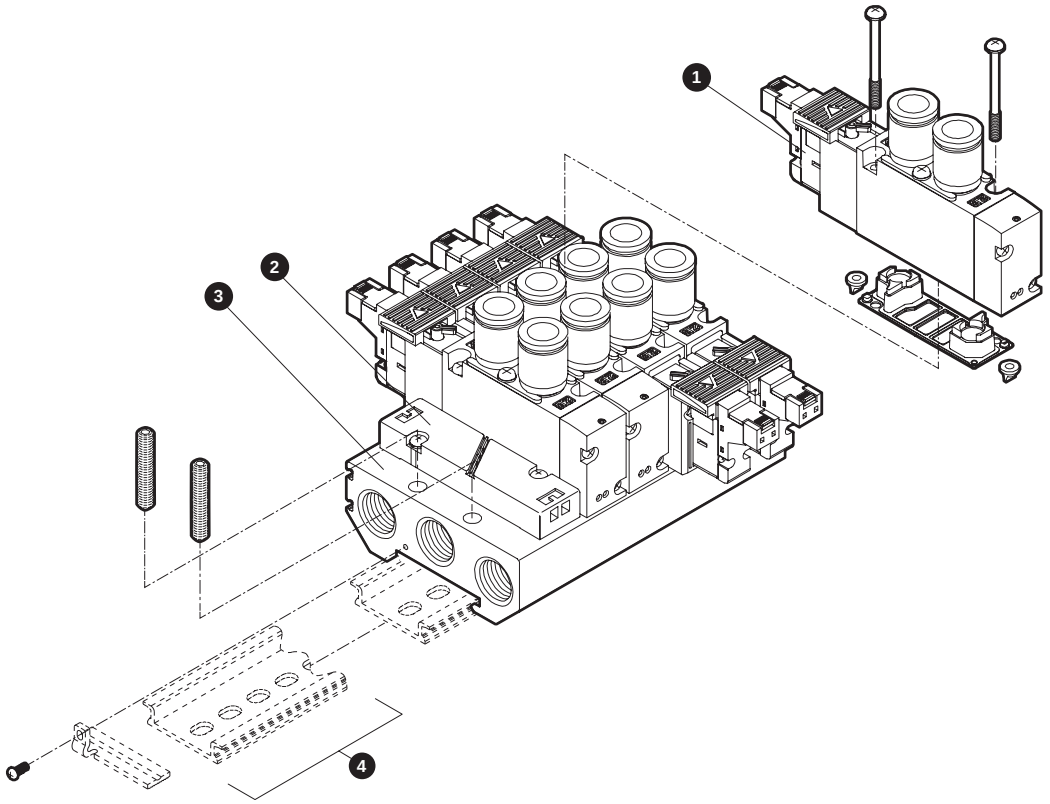

Main parts list

No.	Component name		Model No.	Content	Remarks
1	Discrete valve for mounting base		4GD□□9R- [Port size] - [Electrical connections] [Option] - [voltage] Solenoid position Series flow rate size	Discrete valve Gasket Mounting screws 2 (PR check valve 2)	Details on page 510
2	Masking plate	3G1/4G1	4G1R-MP	Masking plate Gasket Mounting screws 2	* 4G3R-MP has two PR check valves included.
		3G1/4G1	4G1R-MPC (*Pilot exhaust atmosphere release)		
		3G2/4G2	4G2R-MP		
		3G3/4G3	4G3R-MP		
3	Manifold base assembly		M4GD□R-00- [Option] - [station No.] Series flow rate size	Manifold base	
4	DIN rail kit		4GA□R-BAA [Rail length] - D Series flow rate size		Details on page 585

Parts list

No.	Part name	Model No.
-	Coil assembly	4GR - [electrical connections] - □ - COIL - [voltage] Blank: Standard A: Ozone/coolant proof Select from Ⓓ Electrical connections on page 511
-	E-connector socket assembly	4GR - SOCKET - ASSY - [electrical connections] - [voltage]
-	EJ type connector socket assembly	4GR - SOCKET - ASSY - [electrical connections]

No.	Part name			Model No.
-	Cartridge push-in fitting and related parts	4G1	ø4 straight	4G1R-JOINT-C4
			ø6 straight	4G1R-JOINT-C6
			Plug cartridge	4G1R-JOINT-CPG
		4G2	ø4 straight	4G2R-JOINT-C4
			ø6 straight	4G2R-JOINT-C6
			ø8 straight	4G2R-JOINT-C8
			Plug cartridge	4G2R-JOINT-CPG
		4G3	ø6 straight	4G3R-JOINT-C6
			ø8 straight	4G3R-JOINT-C8
			ø10 straight	4G3R-JOINT-C10
			Plug cartridge	4G3R-JOINT-CPG

MEMO

Dimensions CAD

M4GD1

● Grommet lead wire (blank)

*For the 2-position single 3-port valve, either port A or port B is a plug. In addition, the two 3-port valve built-in type has the same dimensions as the double model.

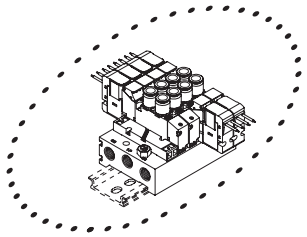

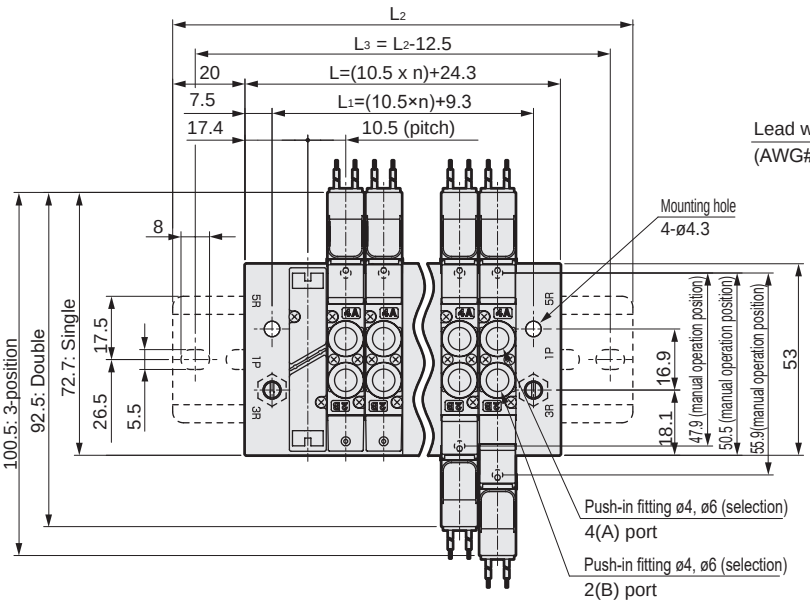

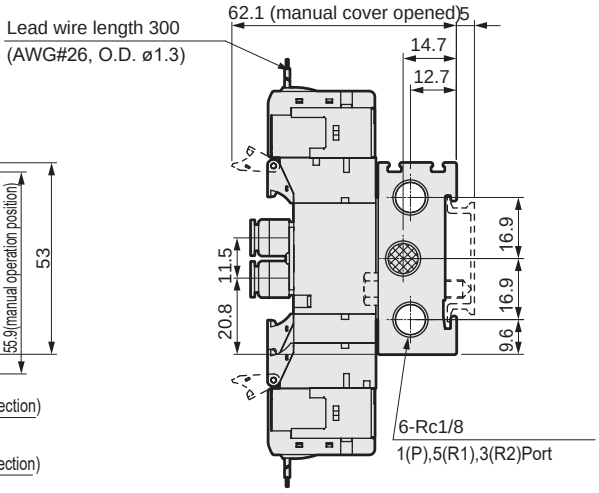

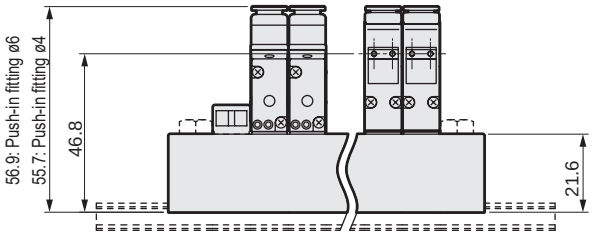

Station No.	2	3	4	5	6	7	8	9	10	11	12	13	14	15	16	17	18	19	20
L	45.3	55.8	66.3	76.8	87.3	97.8	108.3	118.8	129.3	139.8	150.3	160.8	171.3	181.8	192.3	202.8	213.3	223.8	234.3
L_1	30.3	40.8	51.3	61.8	72.3	82.8	93.3	103.8	114.3	124.8	135.3	145.8	156.3	166.8	177.3	187.8	198.3	208.8	219.3
L_2	87.5	100.0	112.5	125.0	137.5	150.0	150.0	162.5	175.0	187.5	200.0	212.5	212.5	225.0	237.5				
L_3	75.0	87.5	100.0	112.5	125.0	137.5	137.5	150.0	162.5	175.0	187.5	200.0	200.0	212.5	225.0				

Dimensions CAD

● M5 female thread (M5)

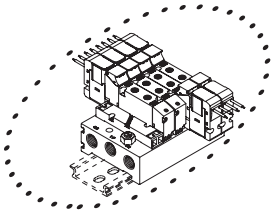

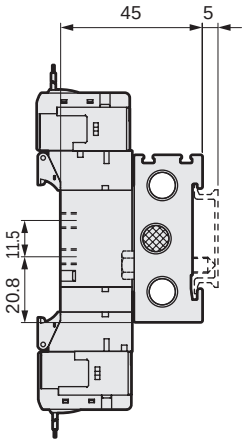

● E-connector (E)

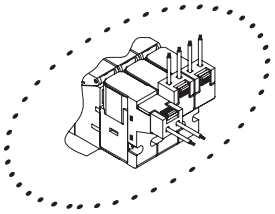

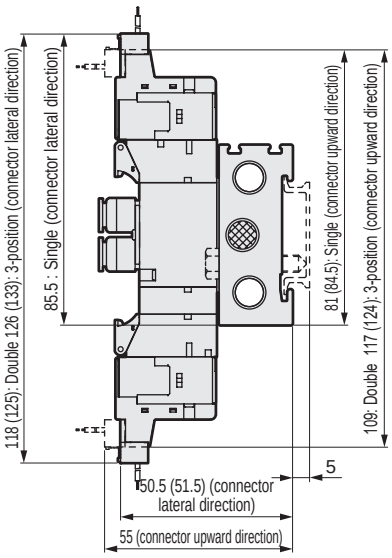

Note: Values in ( ) are for AC voltage.

● EJ type connector (E**J)

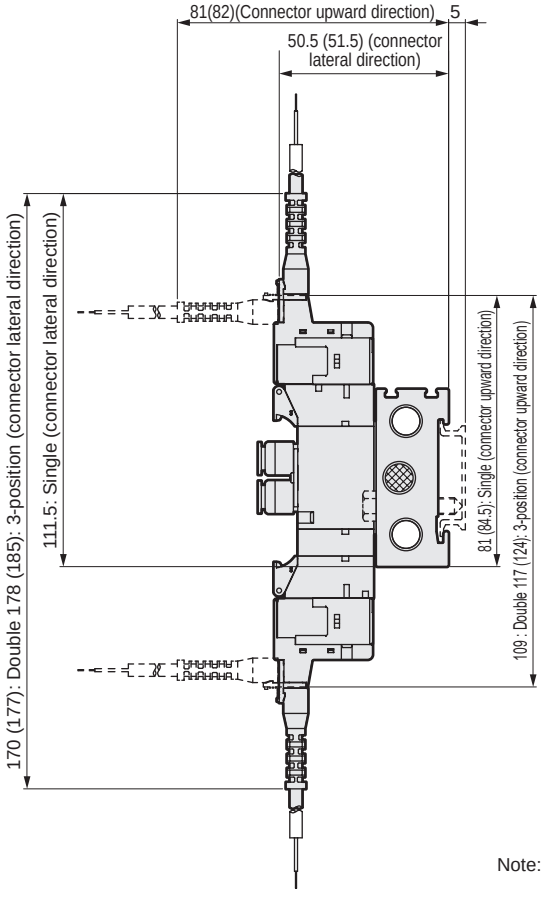

Note: Values in ( ) are for AC voltage.

Dimensions CAD

M4GD2

● Grommet lead wire (blank)

* For the 2-position single 3-port valve, either A port or B port is a plug.
In addition, the two 3-port valve integrated has the same dimensions as the double model.

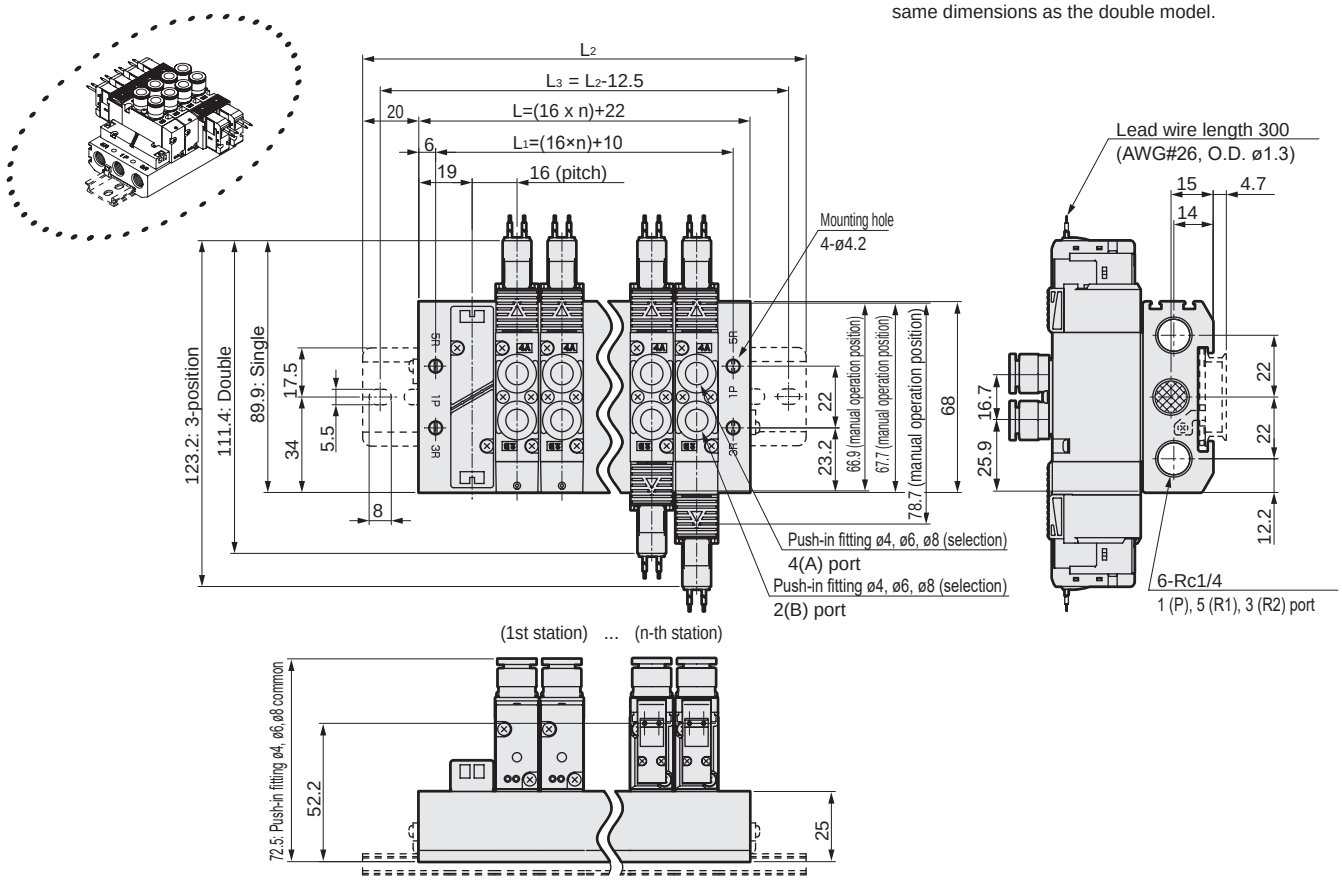

● Rc1/8 female thread (06)

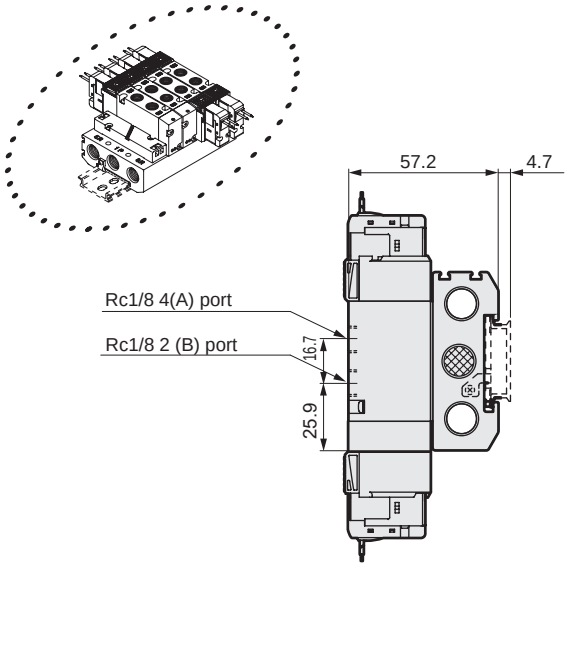

● E-connector (E)

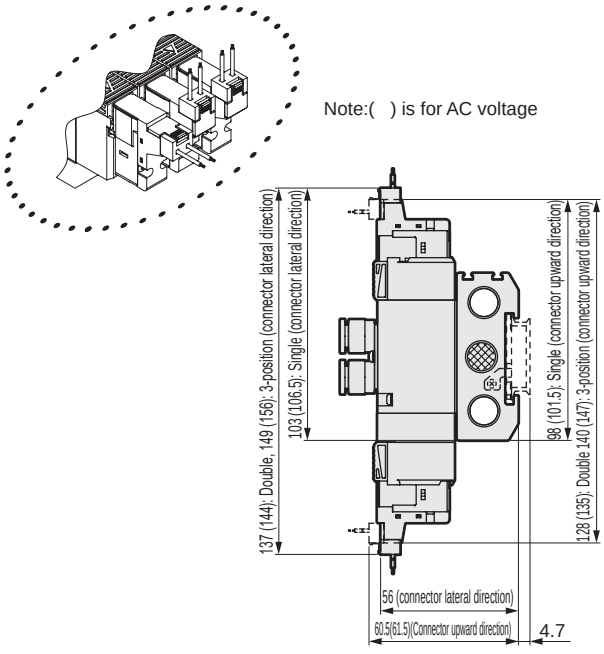

Station No.	2	3	4	5	6	7	8	9	10	11	12	13	14	15	16	17	18	19	20
L	54.0	70.0	86.0	102.0	118.0	134.0	150.0	166.0	182.0	198.0	214.0	230.0	246.0	262.0	278.0	294.0	310.0	326.0	342.0
L1	42.0	58.0	74.0	90.0	106.0	122.0	138.0	154.0	170.0	186.0	202.0	218.0	234.0	250.0	266.0	282.0	298.0	314.0	330.0
L2	100.0	112.5	137.5	150.0	162.5	175.0	200.0	212.5	225.0	250.0	262.5	275.0	287.5	312.5	325.0				
L3	87.5	100.0	125.0	137.5	150.0	162.5	187.5	200.0	212.5	237.5	250.0	262.5	275.0	300.0	312.5				

Dimensions

● EJ type connector (E**J)

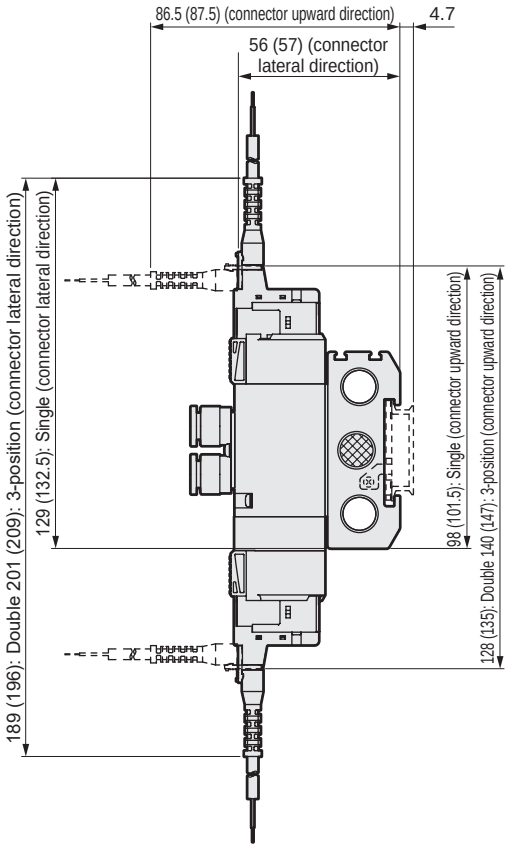

Note: Values in ( ) are for AC voltage.

● DIN terminal box (B)

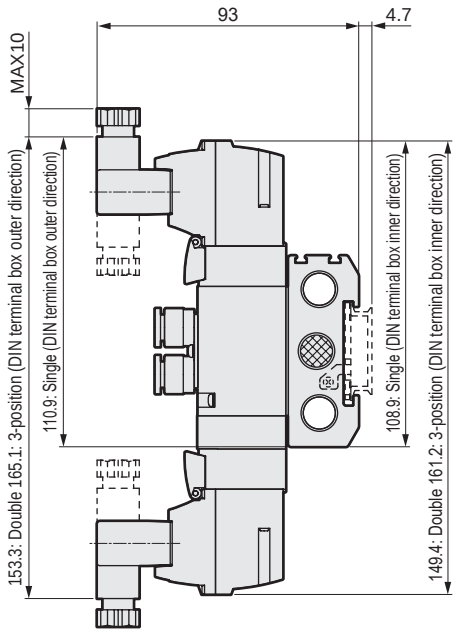

Note: DIN terminal box assembly is shipped facing inward.

Dimensions CAD

M4GD3

● Grommet lead wire (blank)

* For the 2-position single 3-port valve, either A port or B port is a plug.

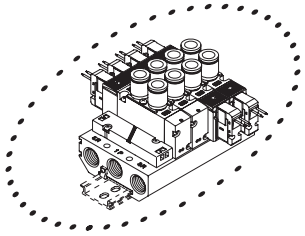

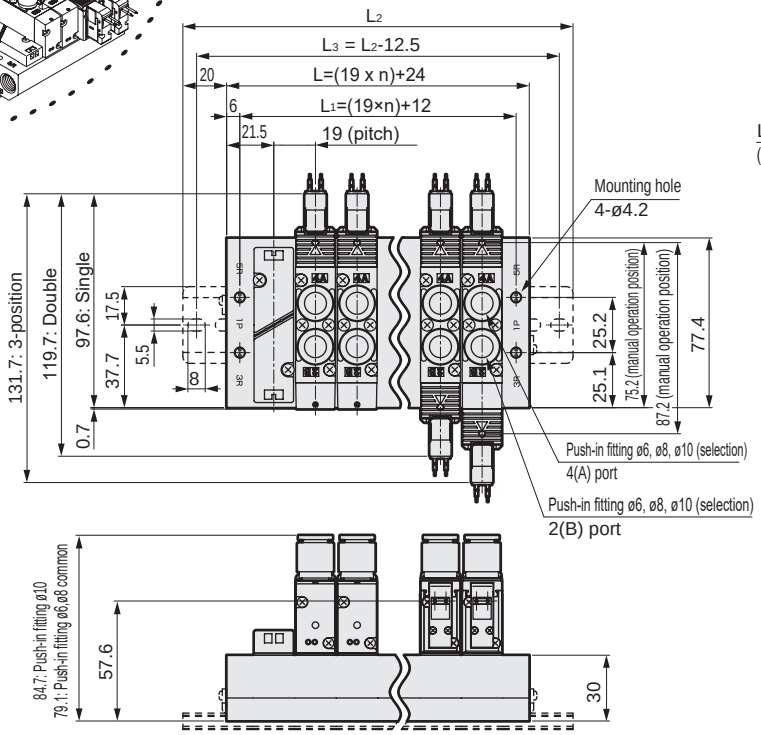

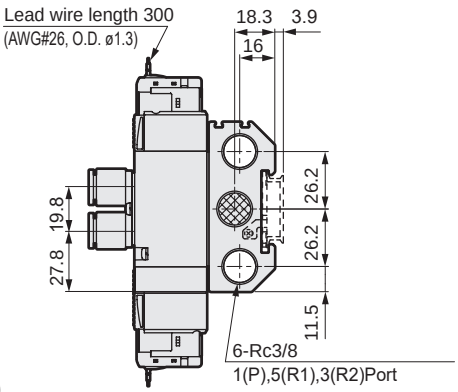

● Rc1/4 female thread (08)

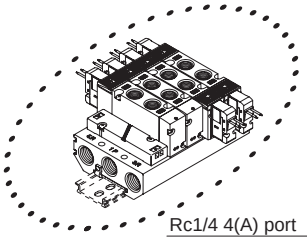

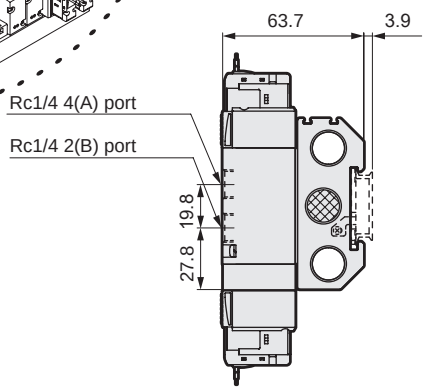

● E-connector (E)

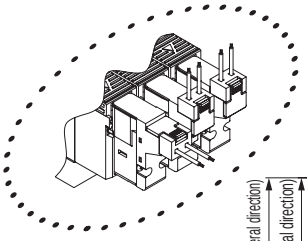

Note: Values in ( ) are for AC voltage.

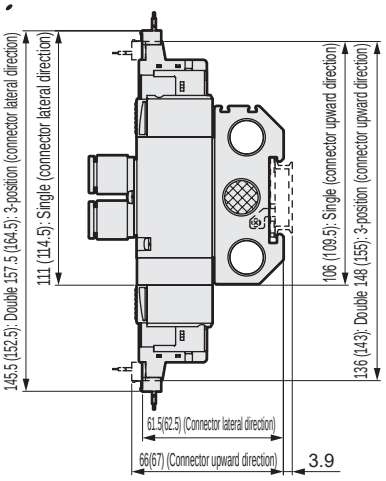

Station No.	2	3	4	5	6	7	8	9	10	11	12	13	14	15	16	17	18	19	20
L	62.0	81.0	100.0	119.0	138.0	157.0	176.0	195.0	214.0	233.0	252.0	271.0	290.0	309.0	328.0	347.0	366.0	385.0	404.0
L_1	50.0	69.0	88.0	107.0	126.0	145.0	164.0	183.0	202.0	221.0	240.0	259.0	278.0	297.0	316.0	335.0	354.0	373.0	392.0
L_2	112.5	125.0	150.0	162.5	187.5	200.0	225.0	237.5	262.5	275.0	300.0	312.5	337.5	350.0	375.0				
L_3	100.0	112.5	137.5	150.0	175.0	187.5	212.5	225.0	250.0	262.5	287.5	300.0	325.0	337.5	362.5				

Dimensions

● EJ type connector (E**J)

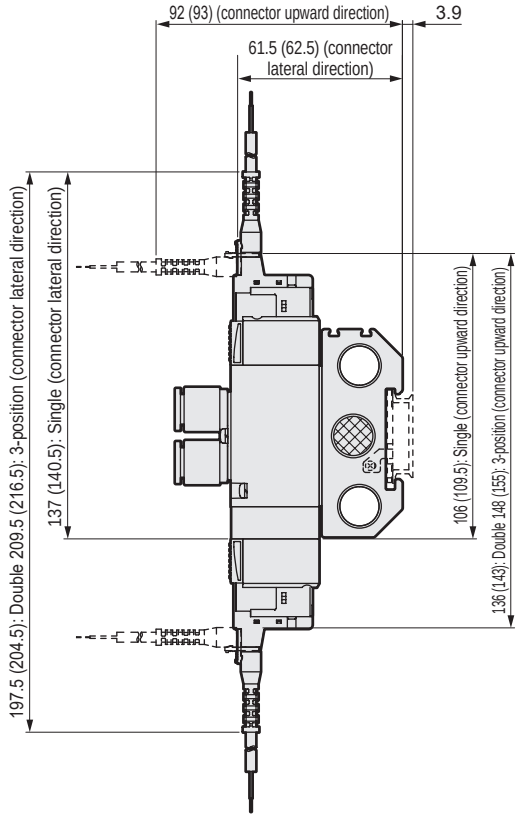

Note: Values in ( ) are for AC voltage.

● DIN terminal box (B)

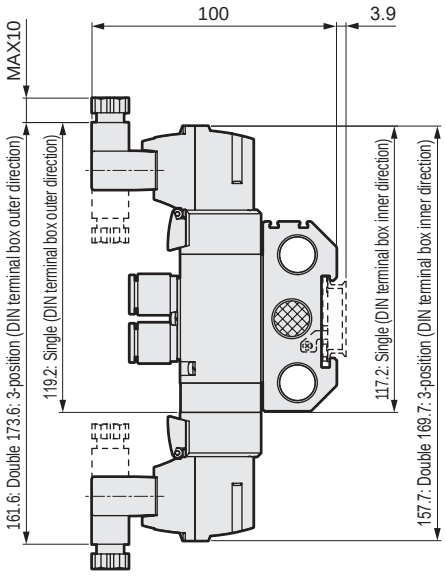

Note: DIN terminal box assembly is shipped facing inward.

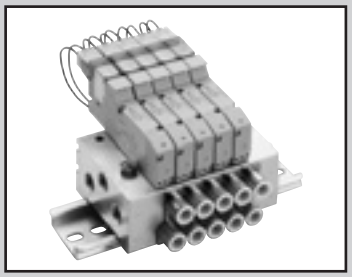

Individual wiring manifold
Base piping
Direct mount/DIN rail mount

M3GE1/2 / M4GE1/2/3-(D) Series

● Cylinder bore size: ø20 to ø100

JIS symbol

● Two 3-port valves integrated
(A side valve: NC, B side valve: NC)

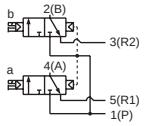

● 5-port valve

2-position single

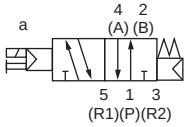

2-position double

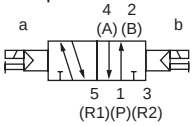

3-position all ports closed

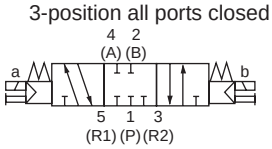

3-position A/B/R connection

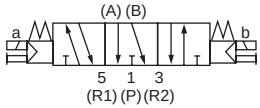

3-position P/A/B connection

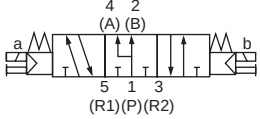

Manifold common specifications

Item		Description
Manifold		Integrated base
Mounting method		Direct mount/DIN rail mount
Supply and exhaust method		Common supply/common exhaust (With internal exhaust check valve)
Pilot exhaust method	Internal pilot	Main valve/pilot valve common exhaust (Standard) (Pilot exhaust check valve built-in)
Piping direction		Lateral direction from base
Valve and operation		Pilot operated soft spool valve
Working fluid		Compressed air
Max. working pressure MPa		0.7 (≈100 psi, 7 bar)
Min. working pressure MPa		0.2 (≈29 psi, 2 bar)
Proof pressure MPa		1.05 (≈150 psi, 10.5 bar)
Ambient temperature °C		-5 (23°F) to 55 (131°F) (no freezing)
Fluid temperature °C		5 (41°F) to 55 (131°F)
Manual override		Non-locking/locking common
Lubrication (*1)		Not required
Degree of protection (*2)		Dust-proof
Vibration resistance m/s^2		50 or less
Shock resistance m/s^2		300 or less
Atmosphere		Cannot be used in corrosive gas environments

*1: Use turbine oil Class 1 ISO VG32 for lubrication. Excessive or intermittent lubrication results in unstable operation.
*2: Avoid dripping water or oil, etc., during use.
IP65 (jet-proof) applies for DIN terminal box specifications. However, the specified outer diameter of the applicable cord and tightening torque must be used for fixing in place.

Electrical specifications

Item		Description			
Rated voltage V		24 DC	12 DC	100 AC	200 AC
Voltage fluctuation range		±10%			
Holding current A	(*3)	0.015 (0.017)	0.030 (0.034)	0.009 (0.009)	0.006 (0.006)
Power consumption W	(*3)	0.35 (0.40)		-	
Apparent power VA	(*3) (*4)	-		0.93 (0.98)	1.40
Thermal class		B			
Surge suppressor		Option			
Indicator		Lamp (option)			

*3: Values in ( ) apply when lamp is included.
*4: 200 VAC is the value of DIN terminal box (with lamp).

Individual specifications

Item		M3GE1/M4GE1		M3GE2/M4GE2		M4GE3	
		Direct mount	DIN rail mount	Direct mount	DIN rail mount	Direct mount	DIN rail mount
Max. station No.	Standard (Internal pilot)	20 stations	16 stations	20 stations	16 stations	20 stations	16 stations
Port size	A/B port	Push-in fitting ø4, ø6 M5		Push-in fitting ø4, ø6, ø8 Rc1/8		Push-in fitting ø6, ø8, ø10 Rc1/4	
	P/R1/R2 port	Rc1/8		Rc1/4		Rc3/8	
Manifold base weight calculation formula (n: station No.) g		35n+61	36n+115	71n+106	73n+134	113n+170	115n+119

Refer to “Cautions for Mounting the DIN Rail” (page 854), and select the manifold.
For 10 or more manifold station No. (5 stations for 4G3), use ports on both side for air supply and exhaust.
The manifold base weight is the value for screw specifications.

Performance/characteristics by model

Item			M3GE1/M4GE1		M3GE2/M4GE2		M4GE3	
			ON	OFF	ON	OFF	ON	OFF
Response time ms	Two 3-port valves integrated		12	15	15	30	-	-
	2-position	Single	15	25	20	30	25	40
		Double	15	-	20	-	25	-
	3-position	ABR connection	20	30	25	35	35	50

Values with a lamp/surge suppressor are shown. The response times are values with working pressure of 0.5 MPa at 20°C, without lubrication.They depend on the pressure and the lubricant quality.

Flow characteristics

Model No.	Solenoid position		P → A/B		A/B → R1/R2			
			C[dm³/(s·bar)]	b	C[dm³/(s·bar)]		b	
M3GE1 M4GE1	Two 3-port valves integrated		0.86	0.35	1.1	(0.67)	0.22	(0.23)
	2-position		1.1	0.22	1.2	(0.70)	0.20	(0.10)
	3-position	All ports closed	0.98	0.22	1.1	—	0.24	—
		ABR connection	0.97	0.35	1.3	(0.68)	0.22	(0.24)
		PAB connection	1.1	0.38	1.1	—	0.21	—
M3GE2 M4GE2	Two 3-port valves integrated		1.7	0.44	2.1	(1.6)	0.32	(0.30)
	2-position		2.4	0.34	2.7	(1.7)	0.24	(0.31)
	3-position	All ports closed	2.2	0.34	2.4	—	0.29	—
		ABR connection	2.2	0.34	2.8	(1.8)	0.24	(0.27)
		PAB connection	2.4	0.29	2.4	—	0.29	—
M4GE3	2-position		3.5	0.34	3.8	(2.6)	0.11	(0.27)
	3-position	All ports closed	3.1	0.33	3.3	—	0.22	—
		ABR connection	3.0	0.30	3.8	(2.7)	0.11	(0.22)
		PAB connection	3.6	0.36	3.3	—	0.28	—

*1: Effective cross-sectional area S and sonic conductance C are converted as S ≈ 5.0 × C.
*2: Values in ( ) are with the exhaust check valve.

Ozone-proof specifications ・ Coolant proof specifications

Can be selected with “How to order” Item Ⓔ option “A” on page 522.

Specifications for rechargeable battery (Catalog No. CC-1226A)

● For use in the rechargeable battery manufacturing process, materials used for air path and sliding section are limited

** - Voltage - **P4**

CE marking specifications

** - Voltage - **ST**

・Standard voltage of 24 VDC or less is CE marking-compatible even if the model No. is not indicated with "ST".

How to order

Manifold model No.

M 4GE1 1 0R - C6 - E2 H D ○ - ○ - 3

3-port manifold model No.

M 3GE1 66 0R - C6 - E2 H D ○ - ○ - 3

Discrete valve for mounting base

4GE1 1 9R - 00 - E2 H ○ — 3

3-port discrete valve for mounting base

3GE1 66 9R - 00 - E2 H ○ — 3

Ⓑ Solenoid position

Ⓐ Model No.

Ⓒ Port size (*3) (*4)

Ⓓ Electrical connections

Ⓔ Option

Ⓕ Mount

Ⓖ Pilot exhaust method

Ⓗ Station No.

Ⓘ Voltage

Precautions for model No. selection

*1 : Select M4GE*80R when mixing with 3, 5-port valves. Further, select M3GE*80R when mixing with masking plate.

*2 : Dimensions are the same as the respective 2-position double solenoid.

3 : CL push-in L fitting is compatible only with the single solenoid manifold. Long elbow is for A port and short elbow for B port.

*4 : A and B ports are the same size for push-in L fitting.

*5 : 3-position all ports closed and PAB connection are not provided with the exhaust check valve specifications (H). Refer to page 851 for details on the exhaust check valve.

*6 : A filter is built into the P-port as standard.

*7 : Specify the spacer mounting position/quantity in manifold specifications sheet. Stacking of spacers is not possible. Combination with the masking plate is not supported. Refer to pages 576 to 580 for details.

*8 : The direct mount of M4GE1 cannot be changed after purchase to the DIN rail mount.

*9 : DIN terminal box only is supported. Two 3-port valves integrated is not available.

* Be sure to fill in the “Manifold specifications sheet” (pages 594 to 596).

Code	Description	Ⓐ Model No. 3GE1	3GE2	4GE1	4GE2	4GE3
Ⓑ Solenoid position						
1	2-position single			●	●	●
2	2-position double			●	●	●
3	3-position all ports closed			●	●	●
4	3-position ABR connection			●	●	●
5	3-position PAB connection			●	●	●
66	Two 3-port valves integrated (*1) (*2) — A side valve: Normally closed / B side valve: Normally closed	●	●			
8	Mix manifold (when there are multiple solenoid positions)	●	●	●	●	●

Ⓒ Port size Port	4(A), 2(B) port	P/R1/R2 port (2) = Rc1/8 (3) = Rc1/4 (4) =Rc3/8				
C4	ø4 push-in fitting	(2)	(3)	(2)	(3)	
C6	ø6 push-in fitting	(2)	(3)	(2)	(3)	(4)
C8	ø8 push-in fitting		(3)		(3)	(4)
C10	ø10 push-in fitting					(4)
CL4	ø4 push-in L-fitting (upward)			(2)		
CL6	ø6 push-in L-fitting (upward)			(2)	(3)	
CL8	ø8 push-in L-fitting (upward)				(3)	(4)
CL10	ø10 push-in L-fitting (upward)					(4)
CD4	ø4 push-in L-fitting (downward)	(2)		(2)		
CD6	ø6 push-in L-fitting (downward)	(2)	(3)	(2)	(3)	
CD8	ø8 push-in L-fitting (downward)		(3)		(3)	(4)
CD10	ø10 push-in L-fitting (downward)					(4)
CX	Push-in fitting mix	(2)	(3)	(2)	(3)	(4)
M5	M5	(2)		(2)		
06	Rc1/8		(3)		(3)	
08	Rc1/4					(4)
00	Discrete valve for mounting base	●	●	●	●	●

Ⓓ Electrical connections
Refer to the next page for electrical connections.

Ⓔ Option							
Blank	Non-locking/locking common manual override		●	●	●	●	●
H	With exhaust check valve	(*5)	●	●	●	●	●
A	Ozone/coolant proof		●	●	●	●	●
F	A/B port filter built in	(*6)	●	●	●	●	●
Z1	Air supply spacer	(*7)	●	●	●	●	●
Z2	In-stop valve spacer	(*7)	●	●	●	●	●
Z3	Exhaust spacer	(*7)	●	●	●	●	●

Ⓕ Mount							
Blank	Direct mount	(*8)	●	●	●	●	●
D	DIN rail mount		●	●	●	●	●

Ⓖ Pilot exhaust method							
Blank	Common exhaust (pilot exhaust check valve built-in)		●	●	●	●	●
C	Atmosphere release (individual wiring only)		○	○	○	○	○

Ⓗ Station No.							
2	2 stations		●	●	●	●	●
to	to						
20	Refer to page 520 for the max. station number per model.						

Ⓘ Voltage							
1	100 VAC (rectifier integrated)		●	●	●	●	●
2	200 VAC (rectifier integrated)	(*9)		●		●	●
3	24 VDC		●	●	●	●	●
4	12 VDC		●	●	●	●	●

is not available.

○ indicates a custom order.

[Electrical connection list]

Ⓓ Electrical connections		Ⓐ Model No. 3GE1	3GE2	4GE1	4GE2	4GE3
Blank	Grommet lead wire (300 mm) (*10)	●	●	●	●	●
B	DIN terminal box (Pg7) with surge suppressor and indicator lamp (*11) (*13)		●		●	●
BN	DIN terminal box (Pg7) (without terminal box) with surge suppressor (*11) (*13)		●		●	●
E-connector (upward/lateral common)						
E0	Lead wire (300 mm) (*12)	●	●	●	●	●
E00	Lead wire (500 mm) (*12)	●	●	●	●	●
E01	Lead wire (1000 mm) (*12)	●	●	●	●	●
E02	Lead wire (2000 mm) (*12)	●	●	●	●	●
E03	Lead wire (3000 mm) (*12)	●	●	●	●	●
E0N	Without lead wire (without socket) (*12)	●	●	●	●	●
E1	Without lead wire (with socket/terminal) (*12)	●	●	●	●	●
E2	Lead wire (300 mm) with surge suppressor/indicator lamp	●	●	●	●	●
E20	Lead wire (500 mm) with surge suppressor/indicator lamp	●	●	●	●	●
E21	Lead wire (1000 mm) with surge suppressor/indicator lamp	●	●	●	●	●
E22	Lead wire (2000 mm) with surge suppressor/indicator lamp	●	●	●	●	●
E23	Lead wire (3000 mm) with surge suppressor/indicator lamp	●	●	●	●	●
E2N	No lead wire (without socket), surge suppressor/indicator lamp	●	●	●	●	●
E3	No lead wire (with socket/terminal), surge suppressor/indicator lamp	●	●	●	●	●
EJ type connector (socket with cover, upward/lateral common)						
E01J	Lead wire (1000 mm) (*12)	●	●	●	●	●
E02J	Lead wire (2000 mm) (*12)	●	●	●	●	●
E03J	Lead wire (3000 mm) (*12)	●	●	●	●	●
E21J	Lead wire (1000 mm) with surge suppressor/indicator lamp	●	●	●	●	●
E22J	Lead wire (2000 mm) with surge suppressor/indicator lamp	●	●	●	●	●
E23J	Lead wire (3000 mm) with surge suppressor/indicator lamp	●	●	●	●	●

*10: The grommet lead wire specifications are compatible with DC voltage only.
*11: A lamp comes with the terminal box.
*12: AC voltage is with a rectifier circuit.
*13: The terminal box conforms to EN175301-803 Type C (former DIN 43650-C).
Refer to pages 856 and 857 for details.

Electrical connections

Discrete valve/individual wiring manifold

Blank Grommet lead wire

● **Lead wire length**
300 mm

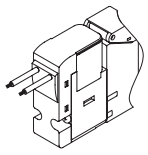

E1 E3 E-connector with socket/terminal

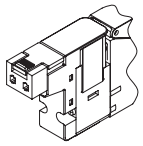

E0 E2 E-connector

● **Lead wire length**
300 mm
500 mm
1000 mm
2000 mm
3000 mm

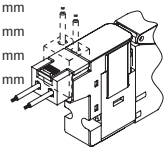

B DIN terminal box

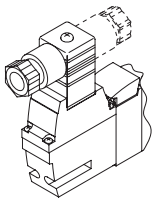

E0N E2N E-connector without socket

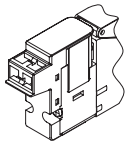

BN DIN terminal box (without terminal box)

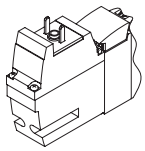

E0*J E2*J EJ type connector

● **Lead wire length**
1000 mm
2000 mm
3000 mm

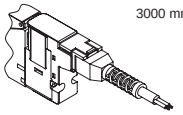

Manifold components explanation and parts list

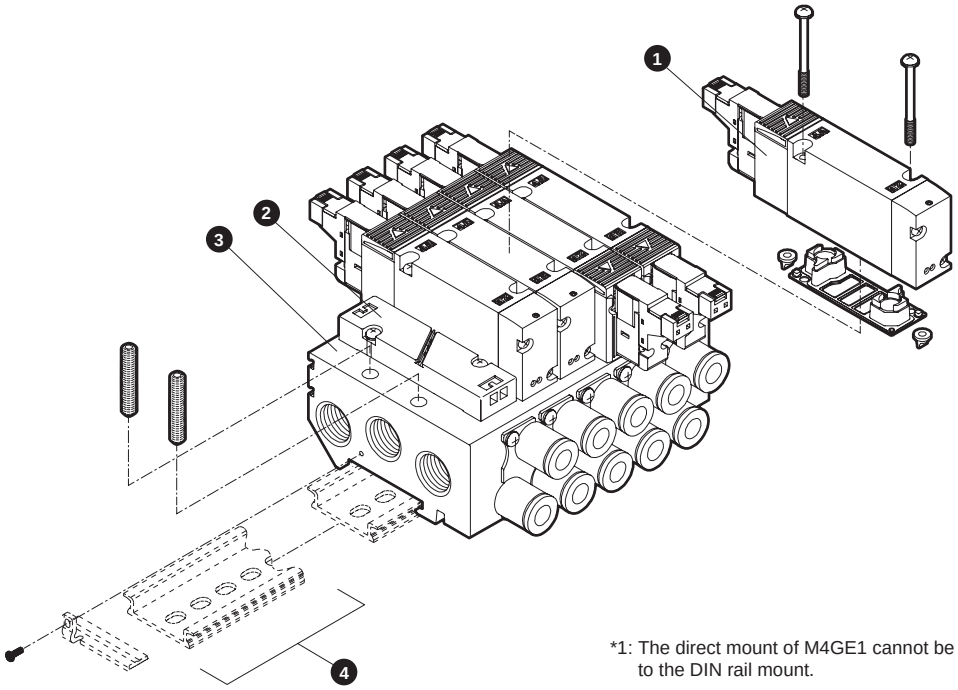

*1: The direct mount of M4GE1 cannot be changed to the DIN rail mount.

Main parts list

No.	Component name		Model No.	Content	Remarks
1	Discrete valve for mounting base		4GE □□9R -00 - Electrical connections - Option - Voltage Solenoid position Series flow rate size	Discrete valve Gasket Mounting screws 2 (PR check valve 2)	Details on page 522
2	Masking plate	3G1/4G1	4G1R-MP	Masking plate Gasket Mounting screws 2	* 4G3R-MP has two PR check valves included.
		3G1/4G1	4G1R-MPC(*Pilot exhaust atmosphere release)		
		3G2/4G2	4G2R-MP		
		3G3/4G3	4G3R-MP		
3	Manifold base assembly		M4GE □R - Port size - Option D - Station No. Series flow rate size Mount	Manifold base	Even if the “D” mounting is selected, the DIN rail kit must be handled separately.
4	DIN rail kit		4GB□R-BAA Rail length - D Series flow rate size		Details on page 585

Parts list

No.	Part name	Model No.
-	Coil assembly	4GR- power supply connections - □ -COIL- Voltage Blank: Standard A: Ozone/coolant proof Select from Ⓓ Electrical connections on page 523
-	E-connector socket assembly	4GR - SOCKET - ASSY - electrical connections - voltage
-	EJ type connector socket assembly	4GR-SOCKET-ASSY- electrical connections

No.	Part name			Model No.
-	Cartridge push-in fitting and related parts	4G1	ø4 straight	4G1R-JOINT-C4
			ø6 straight	4G1R-JOINT-C6
			ø4 elbow	4G1R-JOINT-CL4, CLL4
			ø6 elbow	4G1R-JOINT-CL6, CLL6
			Plug cartridge	4G1R-JOINT-CPG
		4G2	ø4 straight	4G2R-JOINT-C4
			ø6 straight	4G2R-JOINT-C6
			ø8 straight	4G2R-JOINT-C8
			ø6 elbow	4G2R-JOINT-CL6, CLL6
			ø8 elbow	4G2R-JOINT-CL8, CLL8
			Plug cartridge	4G2R-JOINT-CPG
		4G3	ø6 straight	4G3R-JOINT-C6
			ø8 straight	4G3R-JOINT-C8
			ø10 straight	4G3R-JOINT-C10
			ø8 elbow	4G3R-JOINT-CL8, CLL8
			ø10 elbow	4G3R-JOINT-CL10, CLL10
			Plug cartridge	4G3R-JOINT-CPG

MEMO

Dimensions CAD

M4GE1

● Direct mount mounting
Grommet lead wire (blank)

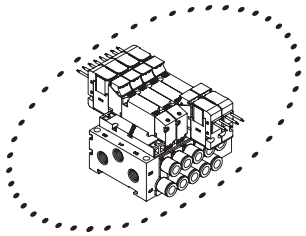

*1: Dedicated for direct mounting.
This cannot be changed to DIN rail specifications.
*2: The two 3-port valve integrated has the same dimensions as the double.

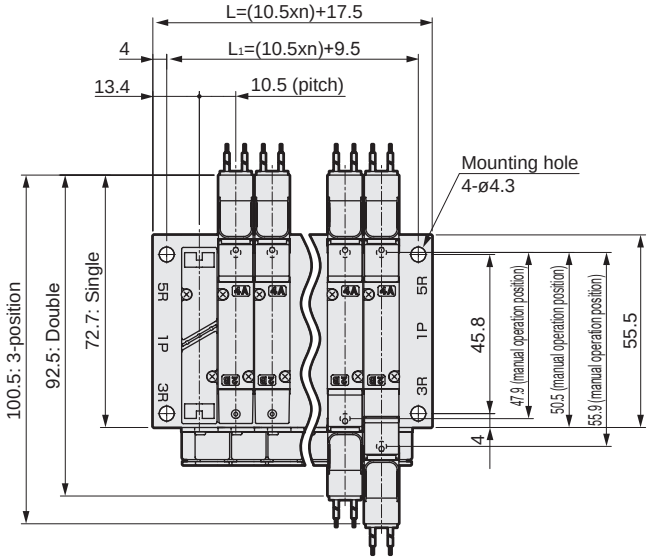

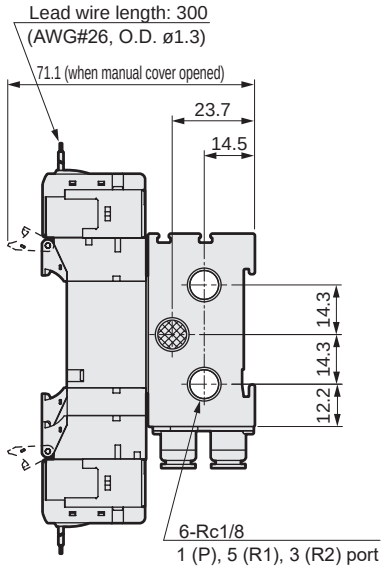

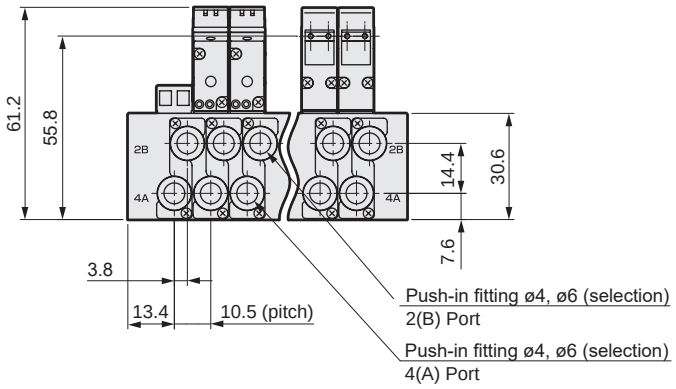

Stn No.	2	3	4	5	6	7	8	9	10	11	12	13	14	15	16	17	18	19	20
L	38.5	49.0	59.5	70.0	80.5	91.0	101.5	112.0	122.5	133.0	143.5	154.0	164.5	175.0	185.5	196.0	206.5	217.0	227.5
L_1	30.5	41.0	51.5	62.0	72.5	83.0	93.5	104.0	114.5	125.0	135.5	146.0	156.5	167.0	177.5	188.0	198.5	209.0	219.5

Dimensions

● M5 female thread (M5)

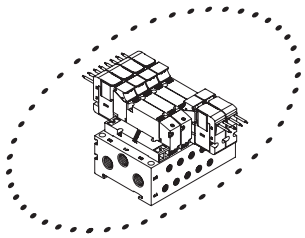

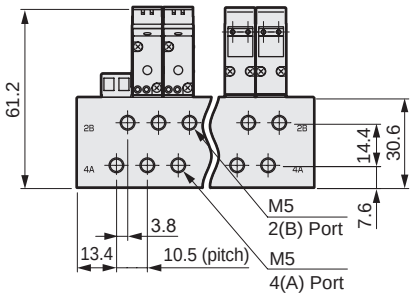

● E-connector (E)

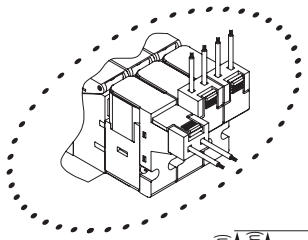

Note: Values in ( ) are for AC voltage.

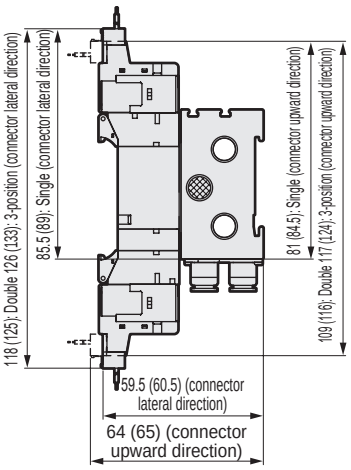

● EJ type connector (E**J)

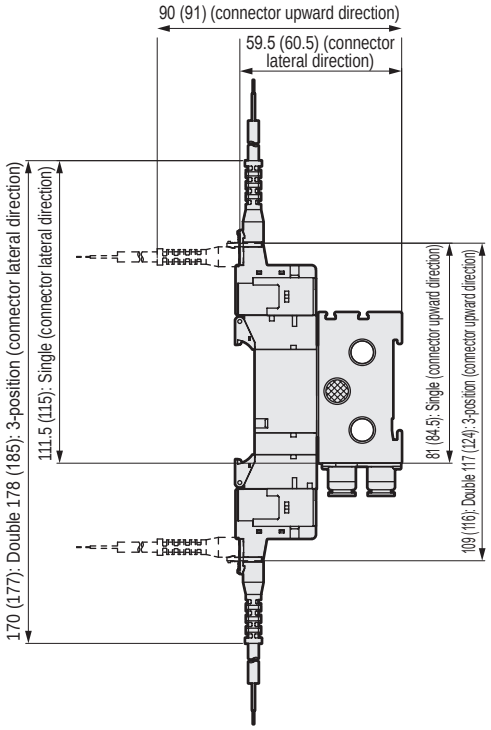

Dimensions CAD

M4GE1

*1: This can be changed to direct mount specifications.
*2: The two 3-port valve integrated has the same dimensions as the double.

● DIN rail mounting (D)
Grommet lead wire (blank)

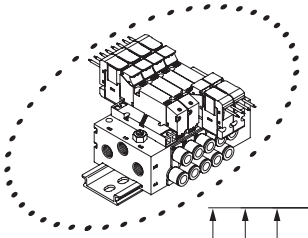

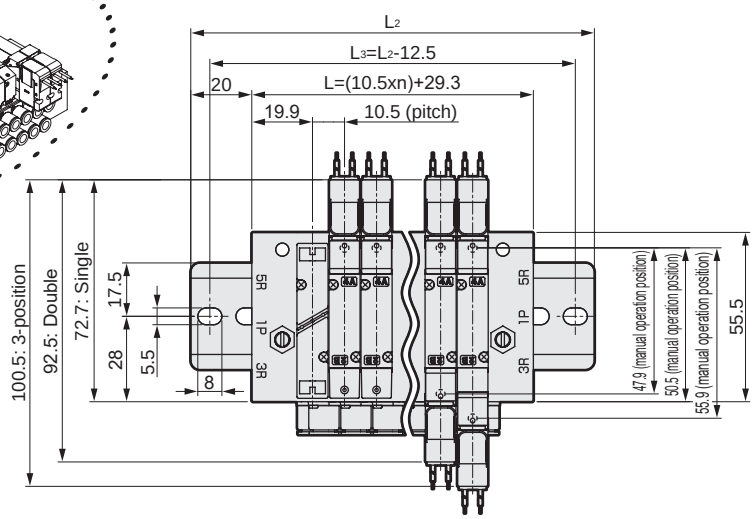

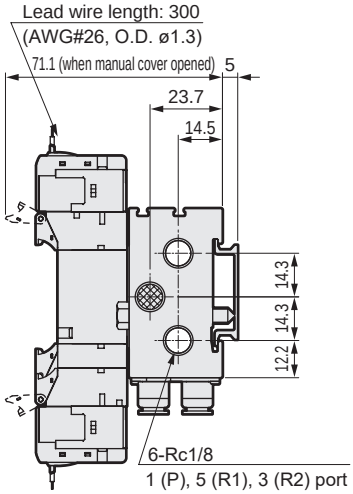

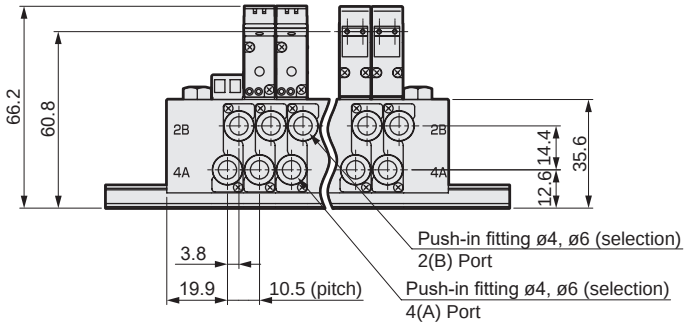

● DIN rail installation (D)
M5 female thread (M5)

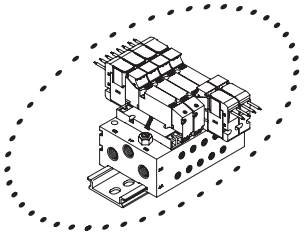

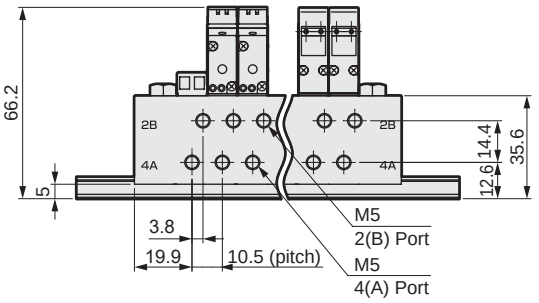

● DIN rail installation (D)
E-connector (E)

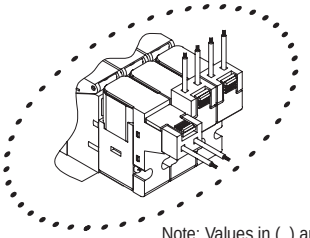

Note: Values in ( ) are for AC voltage.

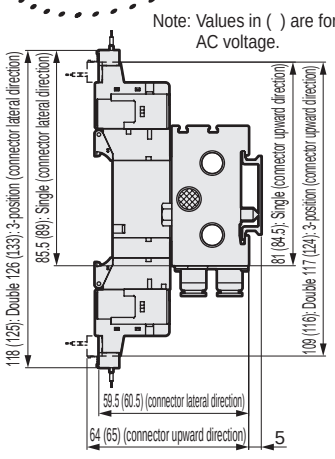

● EJ type connector (E**J)

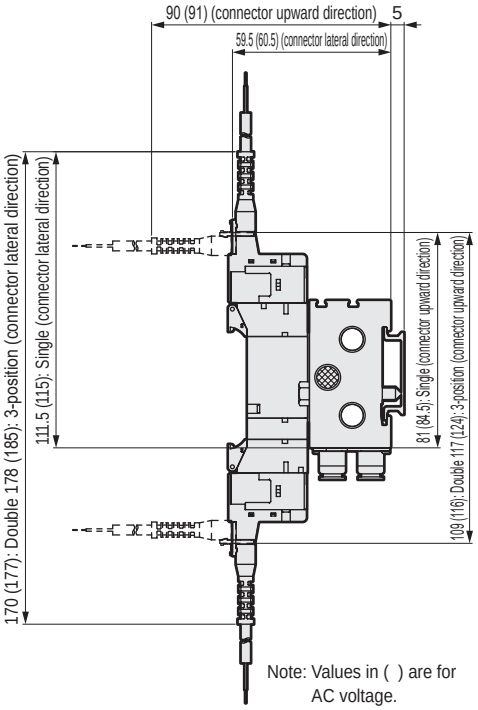

Note: Values in ( ) are for AC voltage.

Stn No.	2	3	4	5	6	7	8	9	10	11	12	13	14	15	16
L	50.3	60.8	71.3	81.8	92.3	102.8	113.3	123.8	134.3	144.8	155.3	165.8	176.3	186.8	197.3
L_2	100.0	112.5	112.5	125.0	137.5	150.0	162.5	175.0	175.0	187.5	200.0	212.5	225.0	237.5	237.5
L_3	87.5	100.0	100.0	112.5	125.0	137.5	150.0	162.5	162.5	175.0	187.5	200.0	212.5	225.0	225.0

Dimensions

● Fitting straight

● ø4(C4)

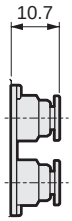

● ø6(C6)

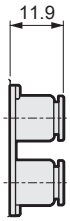

● L Fitting (upward)

● ø4(CL4)

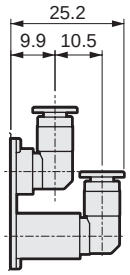

● ø6(CL6)

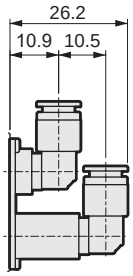

● L Fitting (downward)

● ø4(CD4)

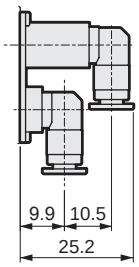

● ø6(CD6)

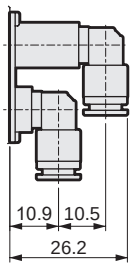

Dimensions CAD

M4GE2

● Grommet lead wire (blank)

Note: The two 3-port valve integrated has the same dimensions as the double.

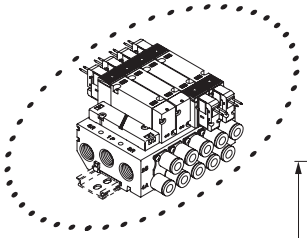

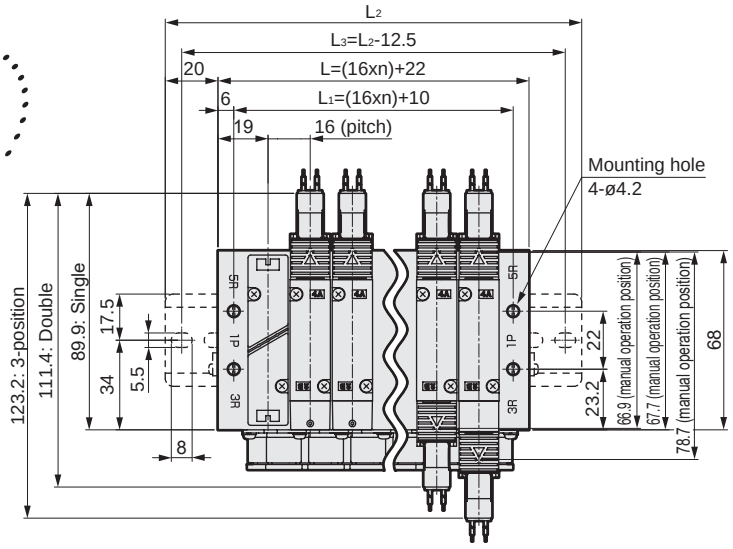

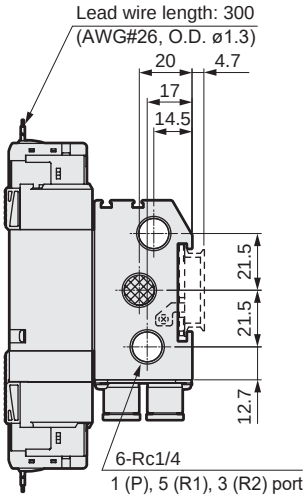

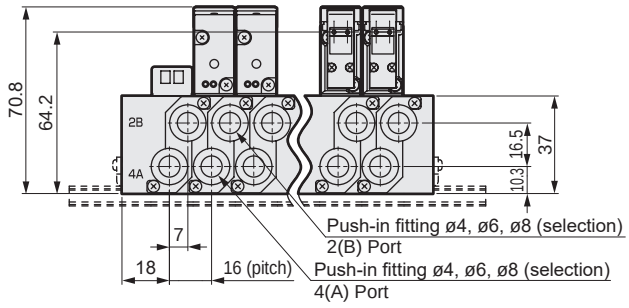

● Rc1/8 female thread (06)

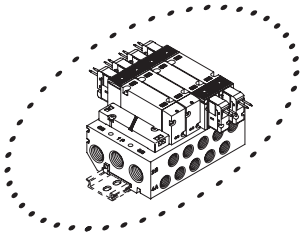

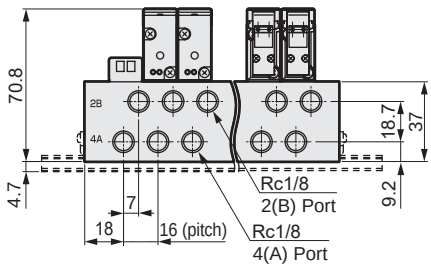

● E-connector (E)

Note: Values in ( ) are for AC voltage.

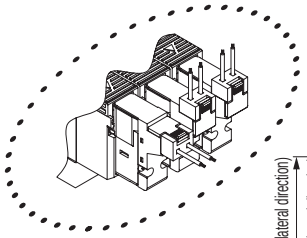

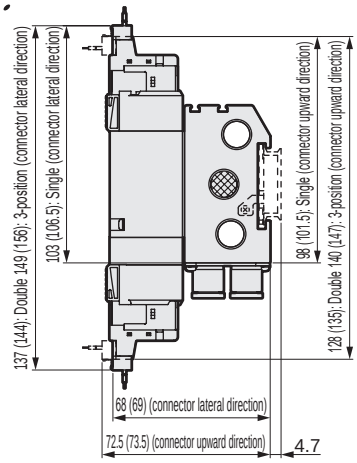

Stn No.	2	3	4	5	6	7	8	9	10	11	12	13	14	15	16	17	18	19	20
L	54.0	70.0	86.0	102.0	118.0	134.0	150.0	166.0	182.0	198.0	214.0	230.0	246.0	262.0	278.0	294.0	310.0	326.0	342.0
L_1	42.0	58.0	74.0	90.0	106.0	122.0	138.0	154.0	170.0	186.0	202.0	218.0	234.0	250.0	266.0	282.0	298.0	314.0	330.0
L_2	100.0	112.5	137.5	150.0	162.5	175.0	200.0	212.5	225.0	250.0	262.5	275.0	287.5	312.5	325.0				
L_3	87.5	100.0	125.0	137.5	150.0	162.5	187.5	200.0	212.5	237.5	250.0	262.5	275.0	300.0	312.5				

Dimensions

● EJ type connector (E**J)

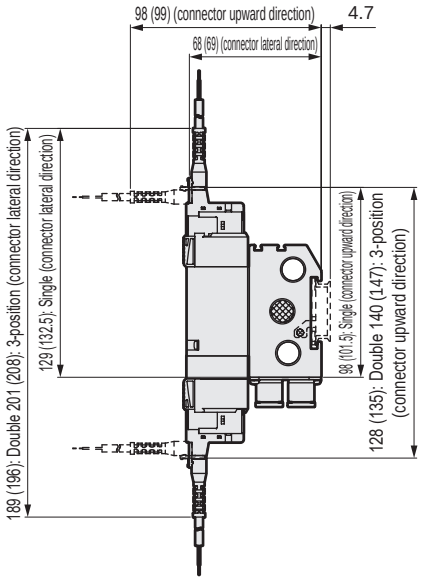

Note: Values in ( ) are for AC voltage.

● DIN terminal box (B)

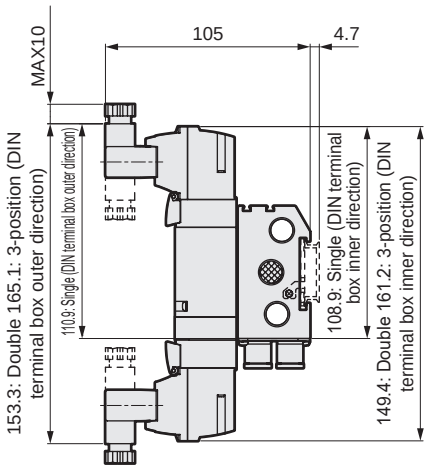

Note: DIN terminal box assembly is shipped facing inward.

● Fitting straight

● ø4(C4) ● ø6(C6) ● ø8(C8)

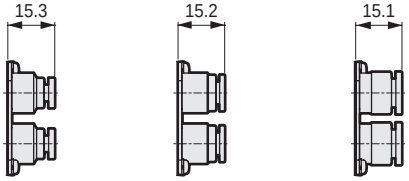

● L Fitting (upward)

● ø6(CL6) ● ø8(CL8)

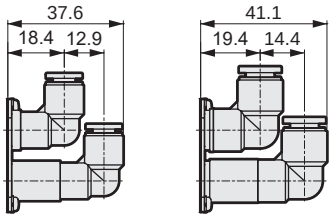

● L Fitting (downward)

● ø6(CD6) ● ø8(CD8)

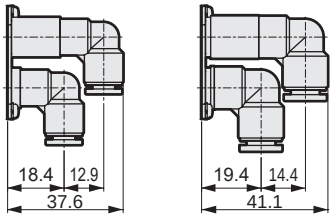

Dimensions CAD

M4GE3

● Grommet lead wire (blank)

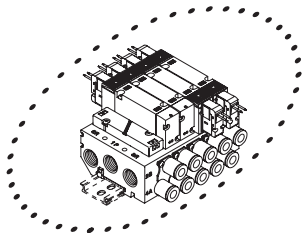

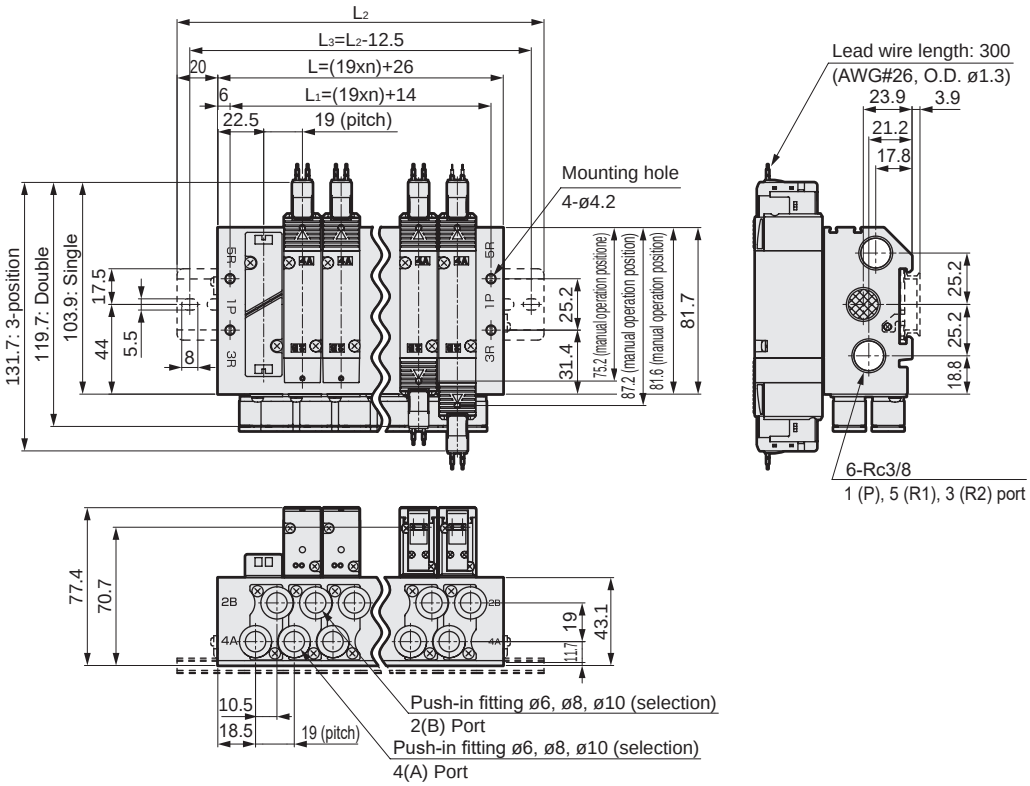

● Rc1/4 female thread (08)

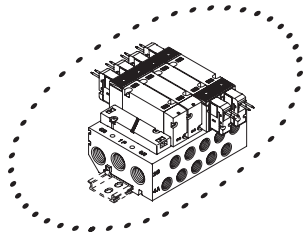

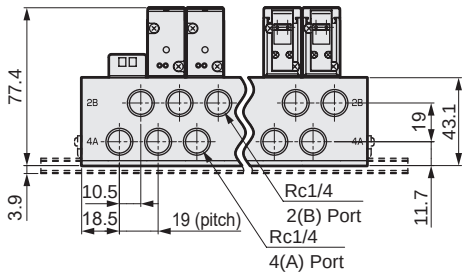

● E-connector (E)

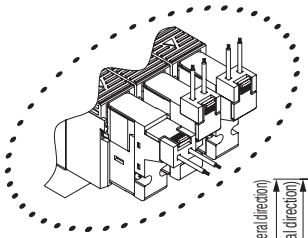

Note: Values in ( ) are for AC voltage.

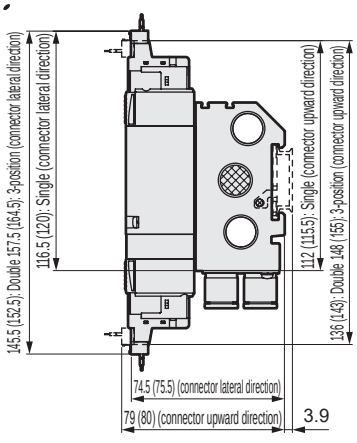

Stn No.	2	3	4	5	6	7	8	9	10	11	12	13	14	15	16	17	18	19	20
L	64.0	83.0	102.0	121.0	140.0	159.0	178.0	197.0	216.0	235.0	254.0	273.0	292.0	311.0	330.0	349.0	368.0	387.0	406.0
L_1	52.0	71.0	90.0	109.0	128.0	147.0	166.0	185.0	204.0	223.0	242.0	261.0	280.0	299.0	318.0	337.0	356.0	375.0	394.0
L_2	112.5	125.0	150.0	162.5	187.5	200.0	225.0	237.5	262.5	275.0	300.0	325.0	337.5	362.5	375.0				
L_3	100.0	112.5	137.5	150.0	175.0	187.5	212.5	225.0	250.0	262.5	287.5	312.5	325.0	350.0	362.5				

Dimensions

● EJ type connector (E**J)

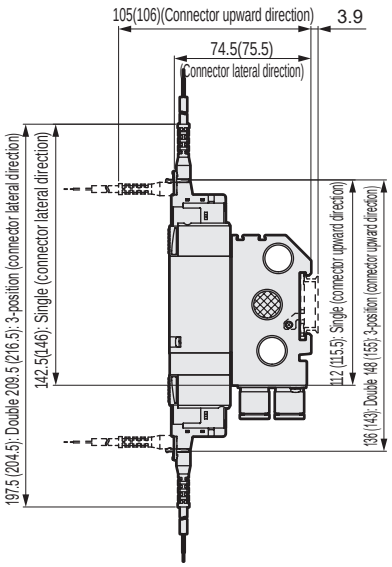

Note:( ) is for AC voltage

● DIN terminal box (B)

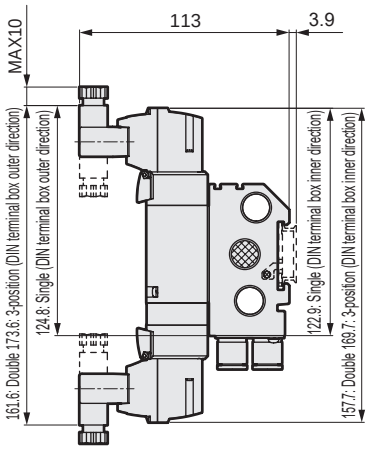

Note: DIN terminal box assembly is shipped facing inward.

● Fitting straight

● ø6(C6) ● ø8(C8) ● ø10 (C10)

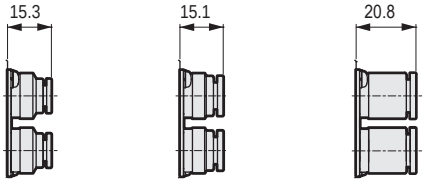

● L fitting (upward)

● ø8 (CL8) ● ø10 (CL10)

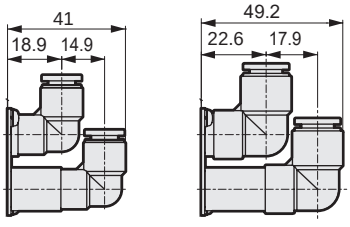

● L fitting (downward)

● ø8 (CD8) ● ø10 (CD10)

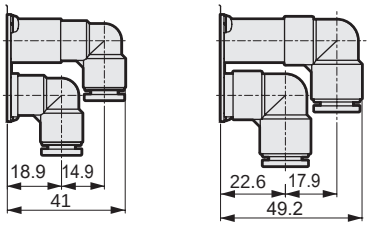

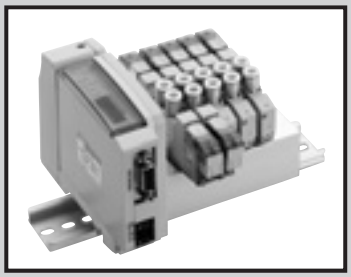

Reduced wiring manifold body piping
Direct mount/DIN rail mount

M3GD1/2/3-T*(D) Series
M4GD1/2/3-T*(D) Series

● Cylinder bore size: ø20 to ø100

RoHS CAD

JIS symbol

● 3-port valve
2-position single NC

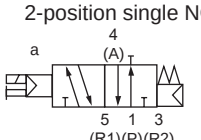

2-position single NO

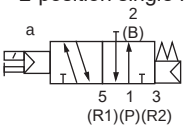

● Two 3-port valves integrated
(A side valve: NC, B side valve: NC)

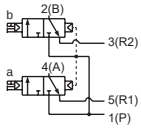

● 5-port valve
2-position single

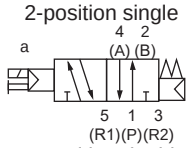

2-position double

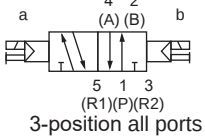

3-position all ports closed

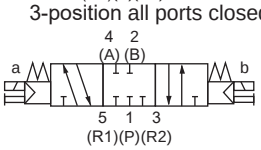

3-position A/B/R connection

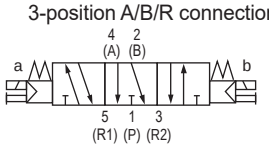

3-position P/A/B connection

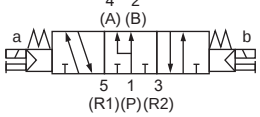

Manifold common specifications

Item		Description
Manifold		Reduced wiring integrated base
Mounting method		Direct mount/DIN rail mount
Supply and exhaust method		Common supply/common exhaust (With internal exhaust check valve)
Pilot exhaust method	Internal pilot	Main valve/pilot valve common exhaust (Standard) (pilot exhaust check valve built-in)
Piping direction		Valve top direction
Valve and operation		Pilot operated soft spool valve
Working fluid		Compressed air
Max. working pressure MPa		0.7 (≈100 psi, 7 bar)
Min. working pressure MPa		0.2 (≈29 psi, 2 bar)
Proof pressure MPa		1.05 (≈150 psi, 10.5 bar)
Ambient temperature °C		-5 (23°F) to 55 (131°F) (no freezing)
Fluid temperature °C		5 (41°F) to 55 (131°F)
Manual override		Non-locking/locking common type
Lubrication (*1)		Not required
Degree of protection (*2)		Dust-proof
Vibration resistance m/s^2		50 or less
Shock resistance m/s^2		300 or less
Atmosphere		Cannot be used in corrosive gas environments

*1: Use turbine oil Class 1 ISO VG32 for lubrication. Excessive or intermittent lubrication results in unstable operation.
*2: Avoid dripping water or oil, etc., during use.

Electrical specifications

Item		Description		
		T1□, T30□, T5□		T6G1, T8□
Rated voltage V		24 DC	12 DC	24 DC
Voltage fluctuation range (*3)		±10%		+10%, -5%
Holding current A		0.017	0.034	0.017
Power consumption W		0.4		
Thermal class		B		
Surge suppressor		Zener diode		
Indicator		LED		

*3: T6G1 and T8□ (serial transmission) may experience voltage drops due to internal circuitry, so care should be taken when regulating voltages.

Individual specifications

Common specifications

Item		M3GD1/M4GD1	M3GD2/M4GD2	M3GD3/M4GD3
Port size	A/B Port	Push-in fitting ø4, ø6 M5	Push-in fitting ø4, ø6, ø8 Rc1/8	Push-in fitting ø6, ø8, ø10 Rc1/4
	P/R1/R2 port	Rc1/8	Rc1/4	Rc3/8

T1□, T30□, T5□

Item	M3GD1/M4GD1		M3GD2/M4GD2		M3GD3/M4GD3	
	Direct mount	DIN rail mount	Direct mount	DIN rail mount	Direct mount	DIN rail mount
Max. station No.	20 stations	16 stations	20 stations	16 stations	16 stations	
Manifold base weight calculation formula (n: station No.) g	29n+215	31n+228	54n+264	56n+297	84n+320	86n+354

T6G1

Item	M3GD1/M4GD1	M3GD2/M4GD2	M3GD3/M4GD3
	DIN rail mount	DIN rail mount	DIN rail mount
Max. station No.	16 stations	16 stations	16 stations
Manifold base weight calculation formula (n: station No.) g	31n+375	56n+444	86n+501

T8□

Item	M3GD1/M4GD1		M3GD2/M4GD2		M3GD3/M4GD3	
	Direct mount	DIN rail mount	Direct mount	DIN rail mount	Direct mount	DIN rail mount
Max. station No.	20 stations	16 stations	20 stations	16 stations	16 stations	
Manifold base weight calculation formula (n: station No.) g	50n+305	52n+332	57n+259	60n+290	150n+384	153n+416

The manifold base weight is the value for screw connection specifications with DIN rail, wiring block or device unit.
The max. station number of the manifold is limited by the max. number of solenoid for each of the following wiring specifications.

Flow characteristics

Model No.	Solenoid position		P → A/B		A/B→R1/R2			
			C[dm³ /(s·bar)]	b	C[dm³ /(s·bar)]		b	
M3GD1 M4GD1	Two 3-port valves integrated		0.86	0.31	1.1	(0.66)	0.19	(0.22)
	2-position		0.99	0.20	1.2	(0.70)	0.20	(0.12)
	3-position	All ports closed	0.94	0.23	1.1	—	0.20	—
		ABR connection	0.93	0.18	1.3	(0.70)	0.23	(0.02)
		PAB connection	1.1	0.28	1.1	—	0.23	—
M3GD2 M4GD2	Two 3-port valves integrated		1.7	0.40	2.3	(1.7)	0.29	(0.32)
	2-position		2.3	0.36	2.9	(1.7)	0.24	(0.33)
	3-position	All ports closed	2.1	0.35	2.5	—	0.32	—
		ABR connection	2.2	0.37	2.9	(1.8)	0.32	(0.29)
		PAB connection	2.4	0.34	2.5	—	0.33	—
M3GD3 M4GD3	2-position		3.2	0.37	3.8	(2.5)	0.13	(0.28)
	3-position	All ports closed	2.9	0.35	3.3	—	0.35	—
		ABR connection	3.0	0.34	3.8	(2.6)	0.12	(0.27)
		PAB connection	3.3	0.30	3.3	—	0.32	—

*1: Effective cross-sectional area S and sonic conductance C are converted as S ≈ 5.0 × C.
*2: Values in ( ) are with the exhaust check valve.

Wiring specifications

Item	T10□ Common terminal block	T11□ Common terminal block	T30□ D-sub-connector	T50□ Flat cable 20-pin	T51□ Flat cable 20-pin	T52□ Flat cable 10-pin	T53□ Flat cable 26-pin
Connector and terminal block specifications	M3 thread fastening 18 terminals	Clamping 26 terminals	D-sub-connector 25-pin	MIL-C-83503 compliant press welding socket 20-pin	MIL-C-83503 compliant press welding socket 20-pin	MIL-C-83503 compliant press welding socket 10-pin	MIL-C-83503 compliant press welding socket 26-pin
Max. number of solenoids	16 points	24 points	24 points	16 points	18 points	8 points	24 points
Manifold internal wiring	Details on pages 816 to 823						
Wiring block position Blank: Left side R: Right side	**Left side: T□** a solenoid side 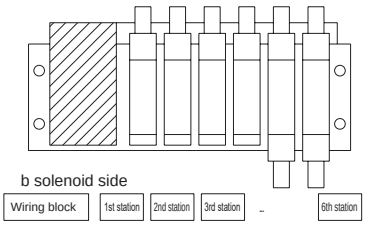 				**Right side: T□R** a solenoid side 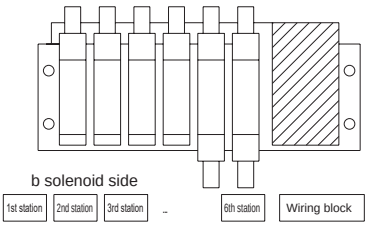 		
Array method Blank: Standard sequential W: Double wiring	**(Ex.) In the case of T50□** Manifold specifications 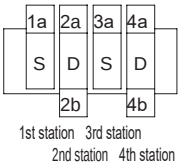 Standard wiring (sequential):Blank Connector pin No. 1 2 3 4 5 6 Valve solenoid No. 1a 2a 2b 3a 4a 4b Double wiring: W Connector pin No. 1 2 3 4 5 6 7 8 Valve solenoid No. 1a Blank 2a 2b 3a Blank 4a 4b						

Serial transmission device unit specifications

Download the communication setting file from the CKD website (https://www.ckd.co.jp/en/).

Item		T6G1 *1
Network name		CC-Link ver1.10
Power supply voltage	Unit side	24 VDC ±10%
	Valve side	24 VDC 10% −5%
Current consumption	Unit side	100mA or less (when all output points are ON)
	Valve side	15 mA or less (when all output points are OFF)
No. of output points		16 points
Occupied number		1 station
Operation display		LED (power supply and communication status)

*1: CC-Link is ver. 1.10.

Item		T8G1 T8G2	T8GP1 T8GP2	T8P1 T8P2	T8PP1 T8PP2	T8EC1 T8EC2	T8ECP1 T8ECP2	T8EN1 T8EN2	T8ENP1 T8ENP2	T8D1 T8D2	T8DP1 T8DP2	T8EB1 T8EB2	T8EBP1 T8EBP2	T8EP1 T8EP2	T8EPP1 T8EPP2
Communication protocol		CC-Link ver. 1.10		PROFIBUS-DP (V0)		EtherCAT		EtherNet/IP		DeviceNet		CC-Link IEF Basic		PROFINET	
Power supply voltage	Unit side	24 VDC ±10%								11 to 25 VDC		24 VDC ±10%			
	Valve side	24 VDC+10%, -5%													
Current consumption	Unit side	60 mA or less (when all output points are ON)		60 mA or less (when all output points are ON)		110 mA or less(when all output points are ON)		120 mA or less(when all output points are ON)		70 mA or less (when all output points are ON)		130 mA or less(when all output points are ON)		130 mA or less(when all output points are ON)	
	Valve side	T8 □ 1:15mA or less T8 □ 2:20mA or less (when all output points are ON) Load current is not included								15 mA or less (When all output points are ON) Load current is not included					
No. of output points		T8□1: 16 points T8□2: 32 points													
Occupied number		1 station													
Operation display		LED (power supply and communication status)													
Output		NPN output	PNP output	NPN output	PNP output	NPN output	PNP output	NPN output	PNP output	NPN output	PNP output	NPN output	PNP output	NPN output	PNP output

How to order

Manifold model No.

M 4GD1 1 0 R- C6 - T30 W H D - ○ - 3

3-port manifold model No.

M 3GD1 1 0 R- C6 - T30 W H D - ○ - 3

Discrete valve for mounting base

4GD1 1 9 R- C6 - A2N H — 3

3-port discrete valve for mounting base

3GD1 1 9 R- C6 - A2N H — 3

- A Model No.
- B Solenoid position
- C Port size
- D Reduced wiring connection
  Zener diode is used as a surge suppressor.
- E Terminal/connector pin array
- F Option
- G Mount
- H Station No.
- I Voltage

A2N indicates the A type (downward) connector, with lamp/surge suppressor and without lead wire.

- ● Refer to page 819 for the model No. of cable with D sub-connector.
- ● Refer to page 815 for the model No. of cable for flat cable connector.

⚠ Precautions for model No. selection

*1 : Select M4GD*80R when mixing with 3, 5-port valves.
Further, select M3GD*80R when mixing with masking plate.

*2 : Dimensions are the same as the respective 2-position double solenoid.

*3 : Push-in fitting cannot be mixed with the discrete valve 4(A) or 2(B) port.

*4 : Blank ..... The wiring will be based on the type of valve used.
W* ..... All wired for double solenoid valves regardless of the type of valve used.

*5 : 3-position all ports closed and PAB connection are not provided with the exhaust check valve specifications (H). Refer to page 851 for details on the exhaust check valve.

*6 : A filter is built into the P-port as standard.

*7 : Specify the spacer mounting position/quantity in manifold specifications sheet.
Stacking of spacers is not possible.
Combination with the masking plate is not supported.
Refer to pages 576 to 580 for details.

* Be sure to fill in the "Manifold specifications sheet" (pages 597 to 608).

Code	Description		Ⓐ Model No. 3GD1	3GD2	3GD3	4GD1	4GD2	4GD3
Ⓑ Solenoid position								
1	2-position single					●	●	●
2	2-position double					●	●	●
3	3-position all ports closed					●	●	●
4	3-position ABR connection					●	●	●
5	3-position PAB connection					●	●	●
1	2-position single normally closed	(*1)	●	●	●			
11	2-position single normally open	(*1)	●	●	●			
66	Two 3-port valves integrated (*1) (*2)	A side valve: Normally closed	●	●				
		B side valve: Normally closed						
8	Mix manifold (when there are multiple solenoid positions)		●	●	●	●	●	●

Ⓒ Port size								
Port	4(A), 2(B) port		P/R1/R2 port (2)=Rc1/8 (3)=Rc1/4 (4)=Rc3/8					
C4	ø4 push-in fitting		(2)	(3)		(2)	(3)	
C6	ø6 push-in fitting		(2)	(3)	(4)	(2)	(3)	(4)
C8	ø8 push-in fitting			(3)	(4)		(3)	(4)
C10	ø10 push-in fitting				(4)			(4)
CX	Push-in fitting mix	(*3)	(2)	(3)	(4)	(2)	(3)	(4)
M5	M5		(2)			(2)		
06	Rc1/8			(3)			(3)	
08	Rc1/4				(4)			(4)

Ⓓ Reduced wiring (light and surge suppressor provided as standard)
Refer to the next page for electrical connections.

Ⓔ Terminal/connector pin array								
Blank	Standard wiring	(*4)	●	●	●	●	●	●
W	Double wiring	(*4)	●	●	●	●	●	●

Ⓕ Option								
Blank	Non-locking/locking common manual override		●	●	●	●	●	●
H	With exhaust check valve	(*5)	●	●	●	●	●	●
A	Ozone/coolant proof product		●	●	●	●	●	●
F	A/B-port filter built in	(*6)	●	●	●	●	●	●
Z1	Air supply spacer	(*7)	●	●	●	●	●	●
Z2	In-stop valve spacer	(*7)	●	●	●	●	●	●
Z3	Exhaust spacer	(*7)	●	●	●	●	●	●

Ⓖ Mount								
Blank	Direct mount		●	●	●	●	●	●
D	DIN rail mount		●	●	●	●	●	●

Ⓗ Station No.								
2	2 stations		●	●	●	●	●	●
to	to							
20	Refer to page 534 for the max. station number per model.							

Ⓘ Voltage								
3	24 VDC		●	●	●	●	●	●
4	12 VDC		●	●	●	●	●	●

Code	Description		Ⓐ Model No. 3GD1	3GD2	3GD3	4GD1	4GD2	4GD3
Ⓓ Reduced wiring (lamp and surge suppressor provided as standard) 12/24 VDC								
T10	Common terminal block (M3 thread)	Left-side spec	●	●	●	●	●	●
T10R		Right-side spec	●	●	●	●	●	●
T11	Common terminal block (clamping)	Left-side spec	●	●	●	●	●	●
T11R		Right-side spec	●	●	●	●	●	●
T30	D-sub-connector	Left-side spec	●	●	●	●	●	●
T30R		Right-side spec	●	●	●	●	●	●
T50	20-pin flat cable connector (with power supply terminal)	Left-side spec	●	●	●	●	●	●
T50R		Right-side spec	●	●	●	●	●	●
T51	20-pin flat cable connector (without power supply terminal)	Left-side spec	●	●	●	●	●	●
T51R		Right-side spec	●	●	●	●	●	●
T52	10-pin flat cable connector (without power supply terminal)	Left-side spec	●	●	●	●	●	●
T52R		Right-side spec	●	●	●	●	●	●
T53	26-pin flat cable connector (without power supply terminal)	Left-side spec	●	●	●	●	●	●
T53R		Right-side spec	●	●	●	●	●	●
Ⓓ Serial transmission (lamp/surge suppressor provided as standard) 24 VDC								
T6G1	CC-Link (connector)	NPN 16 points	●	●	●	●	●	●
T8G1	CC-Link (thin type)	NPN 16 points	●	●	●	●	●	●
T8G2		NPN 32 points	●	●	●	●	●	●
T8GP1		PNP 16 points	●	●	●	●	●	●
T8GP2		PNP 32 points	●	●	●	●	●	●
T8P1	PROFIBUS-DP (thin type)	NPN 16 points	●	●	●	●	●	●
T8P2		NPN 32 points	●	●	●	●	●	●
T8PP1		PNP 16 points	●	●	●	●	●	●
T8PP2		PNP 32 points	●	●	●	●	●	●
T8EC1	EtherCAT (thin type)	NPN 16 points	●	●	●	●	●	●
T8EC2		NPN 32 points	●	●	●	●	●	●
T8ECP1		PNP 16 points	●	●	●	●	●	●
T8ECP2		PNP 32 points	●	●	●	●	●	●
T8EN1	EtherNet/IP (thin type)	NPN 16 points	●	●	●	●	●	●
T8EN2		NPN 32 points	●	●	●	●	●	●
T8ENP1		PNP 16 points	●	●	●	●	●	●
T8ENP2		PNP 32 points	●	●	●	●	●	●
T8D1	DeviceNet (thinType)	NPN 16 points	●	●	●	●	●	●
T8D2		NPN 32 points	●	●	●	●	●	●
T8DP1		PNP 16 points	●	●	●	●	●	●
T8DP2		PNP 32 points	●	●	●	●	●	●
T8EB1	CC-Link IEF Basic (thinType)	NPN 16 points	●	●	●	●	●	●
T8EB2		NPN 32 points	●	●	●	●	●	●
T8EBP1		PNP 16 points	●	●	●	●	●	●
T8EBP2		PNP 32 points	●	●	●	●	●	●
T8EP1	PROFINET (thinType)	NPN 16 points	●	●	●	●	●	●
T8EP2		NPN 32 points	●	●	●	●	●	●
T8EPP1		PNP 16 points	●	●	●	●	●	●
T8EPP2		NPN 32 points	●	●	●	●	●	●
A2N	Without lead wire (without socket)with surge suppressor and indicator lamp		●	●	●	●	●	●

Ozone-proof specifications • Coolant proof specifications

Can be selected with “How to order” Item Ⓕ option “A” on page 536.

Specifications for rechargeable battery (Catalog No. CC-1226A)

● For use in the rechargeable battery manufacturing process, materials used for air path and sliding section are limited

** - Voltage - **P4**

CE marking specifications

** - Voltage - **ST**

- Standard voltage of 24 VDC or less is CE marking-compatible even if the model No. is not indicated with "ST".

Manifold components explanation and parts list

- T10/T10R
- T11/T11R
- T30/T30R
- T50/T50R
- T51/T51R
- T52/T52R
- T53/T53R

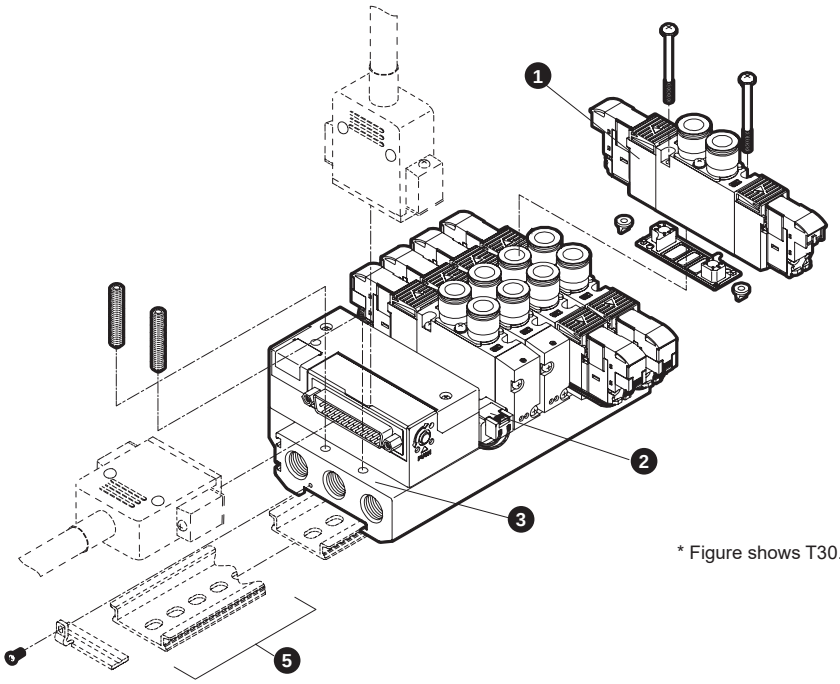

* Figure shows T30.

- T6G1

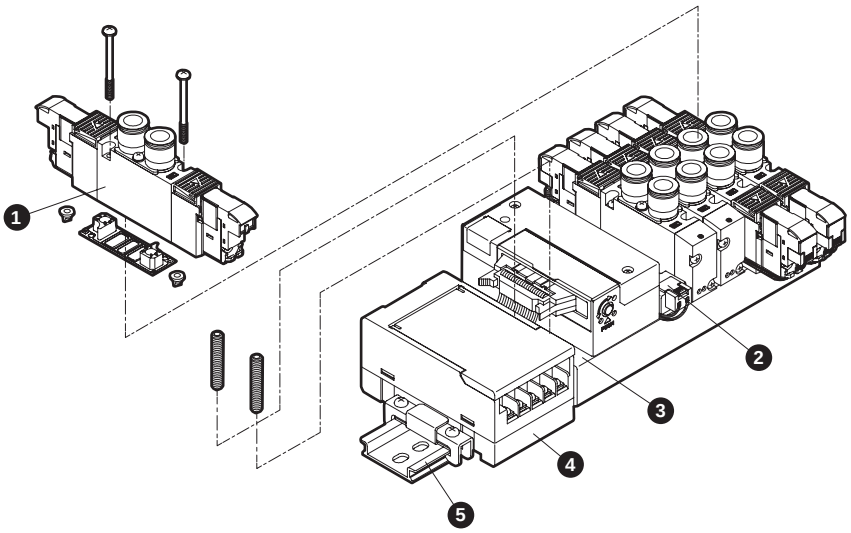

- T8*

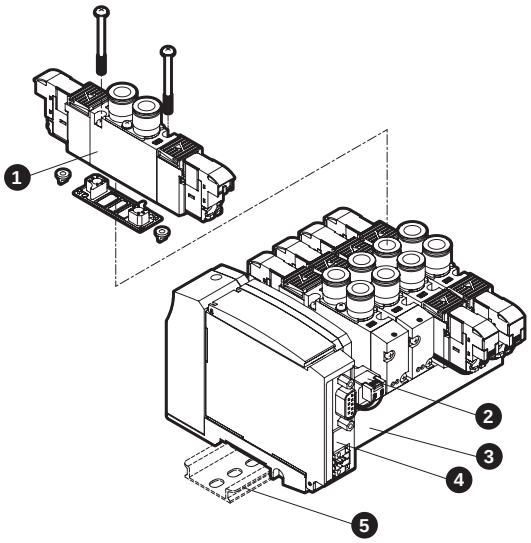

Main parts list

No.	Component name		Model No.	Content	Remarks
1	Discrete valve for mounting base		4GD□□9R- [Port size] -A2N [Option] - [Voltage] Solenoid position Series flow rate size	Discrete valve Gasket Mounting screws 2 (PR check valve 2)	Details on page 536
2	Masking plate	3G1/4G1	4G1R-MP	Masking plate Gasket Mounting screws 2	* 4G3R-MP has two PR check valves included.
		3G2/4G2	4G2R-MP		
		3G3/4G3	4G3R-MP		
3	Manifold base assembly		M4GD□R-00- [T*] - [Option] - [Station No.] Reduced wiring connection Series flow rate size	Manifold base Wiring block	
4	Serial transmission device unit		4GR-OPP3- [Wiring method]	OPP3 discrete serial transmission device (adapter) station (connector connection)	Details on page 552
			4GR-OPP7- [Wiring method]	OPP7 discrete serial transmission device (adapter) station (slim slot)	
5	DIN rail kit		4GA□R-BAA [Rail length] - D Series flow rate size		Details on page 585

Parts list

No.	Part name	Model No.
-	Coil assembly	4GR-A2N- □-COIL- [Voltage] Blank: Standard A: Ozone/coolant proof
-	A-connector Socket assembly Details on page 837	Series flow rate size 4G□R-SOCKET-ASSY-A□□- [Row No.] Blank: Left side, R: Right side a: aSOL side, b: bSOL side n: Specify position of valve to be connected

No.	Part name			Model No.
-	Cartridge push-in fitting and related parts	4G1	ø4 straight	4G1R-JOINT-C4
			ø6 straight	4G1R-JOINT-C6
			Plug cartridge	4G1R-JOINT-CPG
		4G2	ø4 straight	4G2R-JOINT-C4
			ø6 straight	4G2R-JOINT-C6
			ø8 straight	4G2R-JOINT-C8
			Plug cartridge	4G2R-JOINT-CPG
		4G3	ø6 straight	4G3R-JOINT-C6
			ø8 straight	4G3R-JOINT-C8
			ø10 straight	4G3R-JOINT-C10
			Plug cartridge	4G3R-JOINT-CPG

Dimensions CAD

M4GD1

* Figure shows T10. Refer to pages 550 and 551 for detailed wiring block dimensions.
* For the 2-position single 3-port valve, either A port or B port is a plug. In addition, the two 3-port valve integrated has the same dimensions as the double model.

● Reduced wiring left side type (T10/T11/T30/T50/T51/T52/T53)

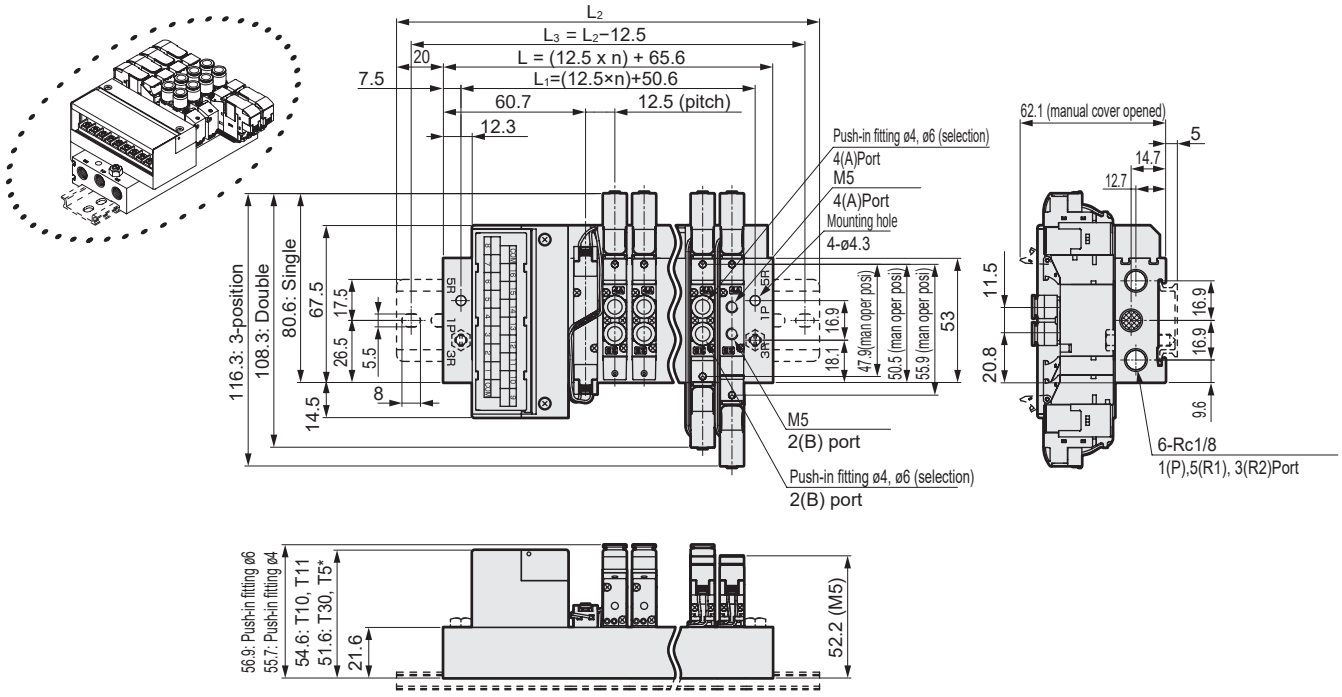

● Reduced wiring right side type (T10R/T11R/T30R/T50R/T51R/T52R/T53R)

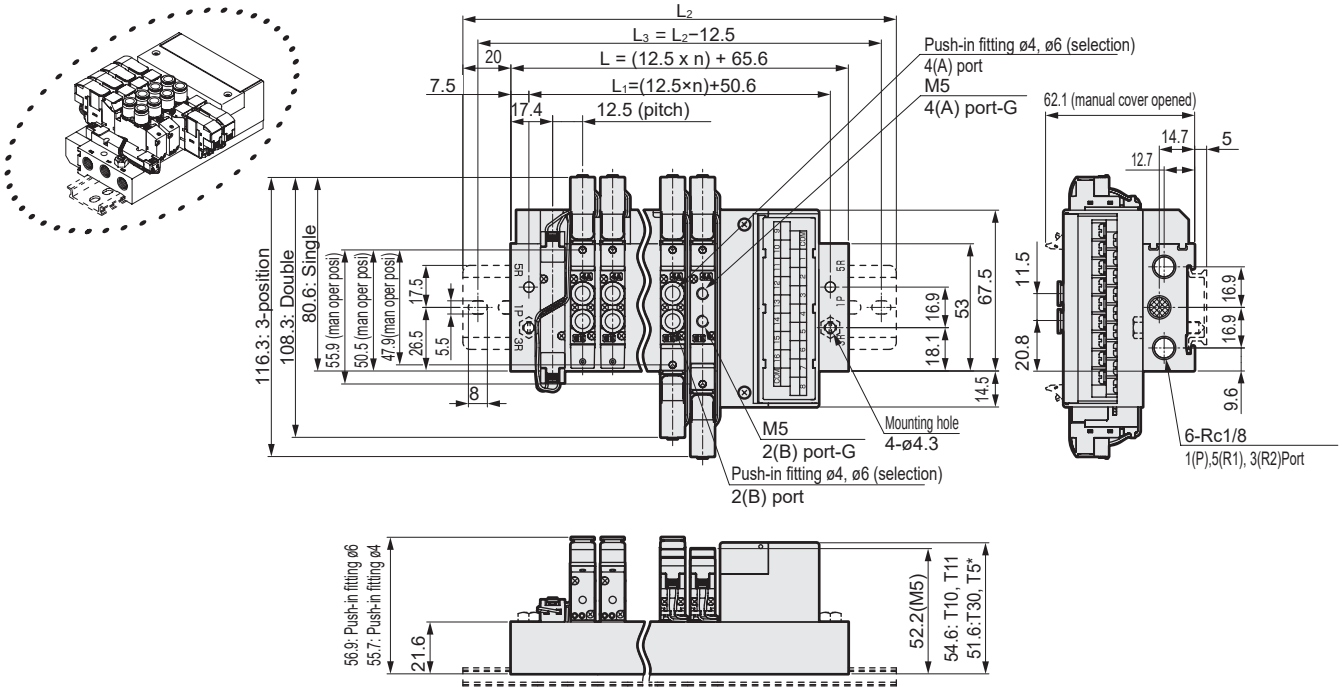

Station No.	2	3	4	5	6	7	8	9	10	11	12	13	14	15	16	17	18	19	20
L	90.6	103.1	115.6	128.1	140.6	153.1	165.6	178.1	190.6	203.1	215.6	228.1	240.6	253.1	265.6	278.1	290.6	303.1	315.6
L_1	75.6	88.1	100.6	113.1	125.6	138.1	150.6	163.1	175.6	188.1	200.6	213.1	225.6	238.1	250.6	263.1	275.6	288.1	300.6
L_2	137.5	150.0	162.5	175.0	187.5	200.0	212.5	225.0	237.5	250.0	262.5	275.0	287.5	300.0	312.5				
L_3	125.0	137.5	150.0	162.5	175.0	187.5	200.0	212.5	225.0	237.5	250.0	262.5	275.0	287.5	300.0				

Dimensions CAD

M4GD1

* For the 2-position single 3-port valve, either port A or port B is a plug. In addition, the two 3-port valve built-in type has the same dimensions as the double model.

● Serial transmission (T6G1)
DIN rail mount (D)

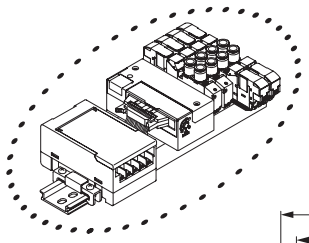

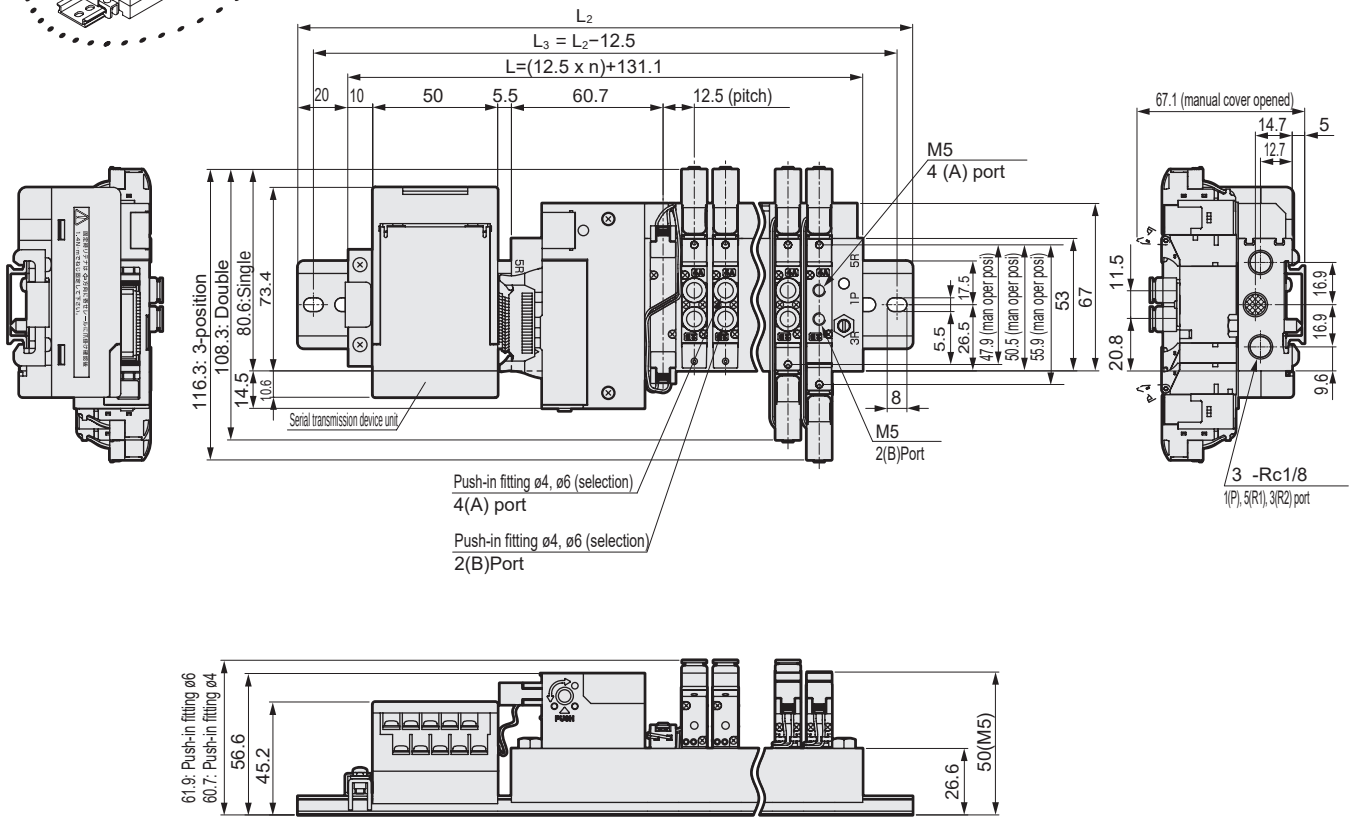

Station No.	2	3	4	5	6	7	8	9	10	11	12	13	14	15	16
L	156.1	168.6	181.1	193.6	206.1	218.6	231.1	243.6	256.1	268.6	281.1	293.6	306.1	318.6	331.1
L_2	200.0	212.5	225.0	237.5	250.0	262.5	275.0	287.5	300.0	312.5	325.0	337.5	350.0	362.5	375.0
L_3	187.5	200.0	212.5	225.0	237.5	250.0	262.5	275.0	287.5	300.0	312.5	325.0	337.5	350.0	362.5

Dimensions CAD

M4GD1

* For the 2-position single 3-port valve, either A port or B port is a plug.

● Serial transmission (T8)
DIN rail mount (D)

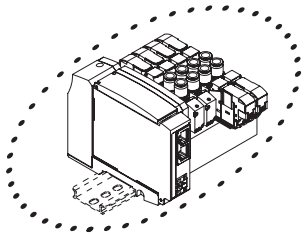

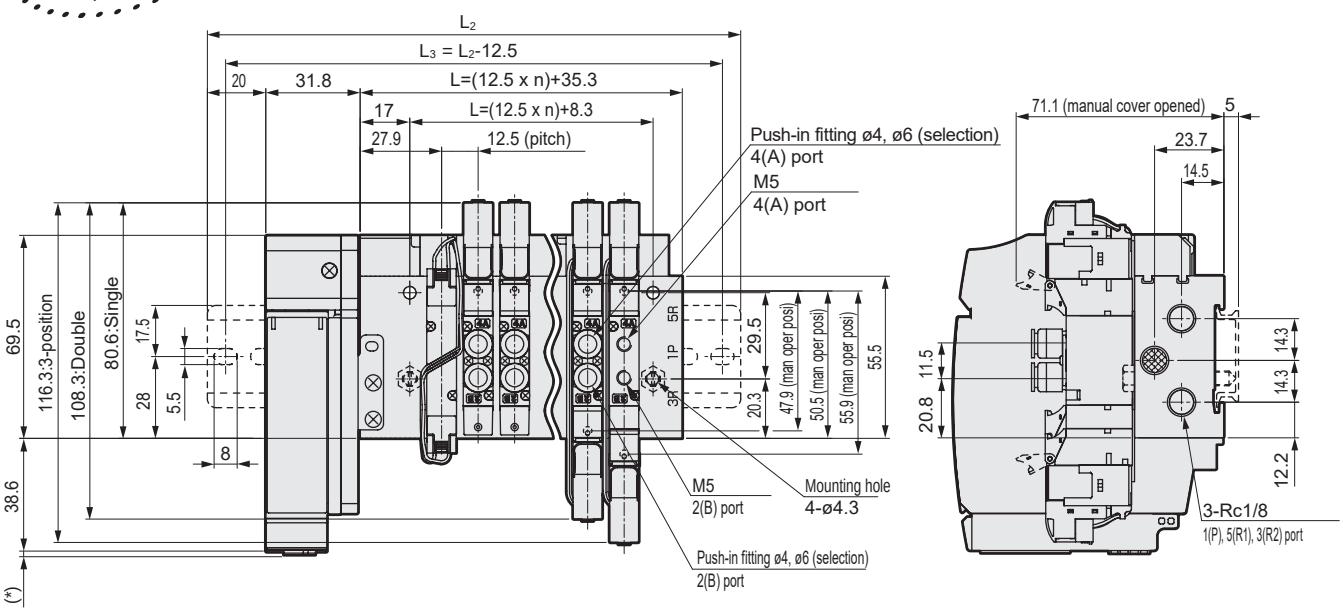

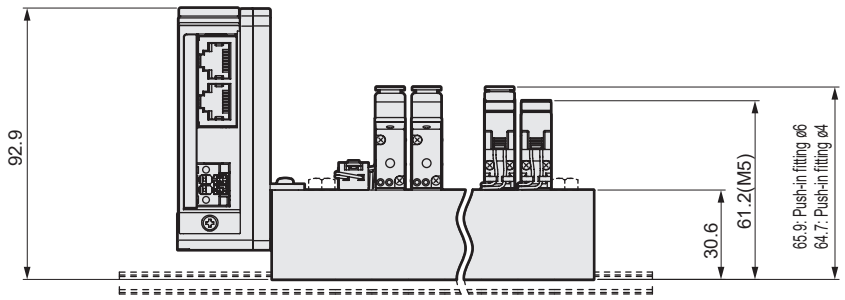

Serial transmission	* Dimensions
T8G □	1.0
T8P □	4.9
T8E □	1.5
T8D □	1.0

Station No.	2	3	4	5	6	7	8	9	10	11	12	13	14	15	16	17	18	19	20
L	60.3	72.8	85.3	97.8	110.3	122.8	135.3	147.8	160.3	172.8	185.3	197.8	210.3	222.8	235.3	247.8	260.3	272.8	285.3
L_1	33.3	45.8	58.3	70.8	83.3	95.8	108.3	120.8	133.3	145.8	158.3	170.8	183.3	195.8	208.3	220.8	233.3	245.8	258.3
L_2	137.5	150.0	162.5	175.0	187.5	200.0	212.5	225.0	237.5	250.0	262.5	275.0	287.5	300.0	312.5				
L_3	125.0	137.5	150.0	162.5	175.0	187.5	200.0	212.5	225.0	237.5	250.0	262.5	275.0	287.5	300.0				

Dimensions

M4GD2

● Reduced wiring left side type (T10/T11/T30/T50/T51/T52/T53)

* Figure shows T10. Refer to pages 550 and 551 for detailed wiring block dimensions.
* For the 2-position single 3-port valve, either port A or port B is a plug. In addition, the two 3-port valve built-in type has the same dimensions as the double model.

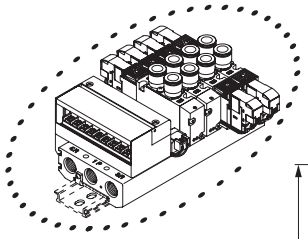

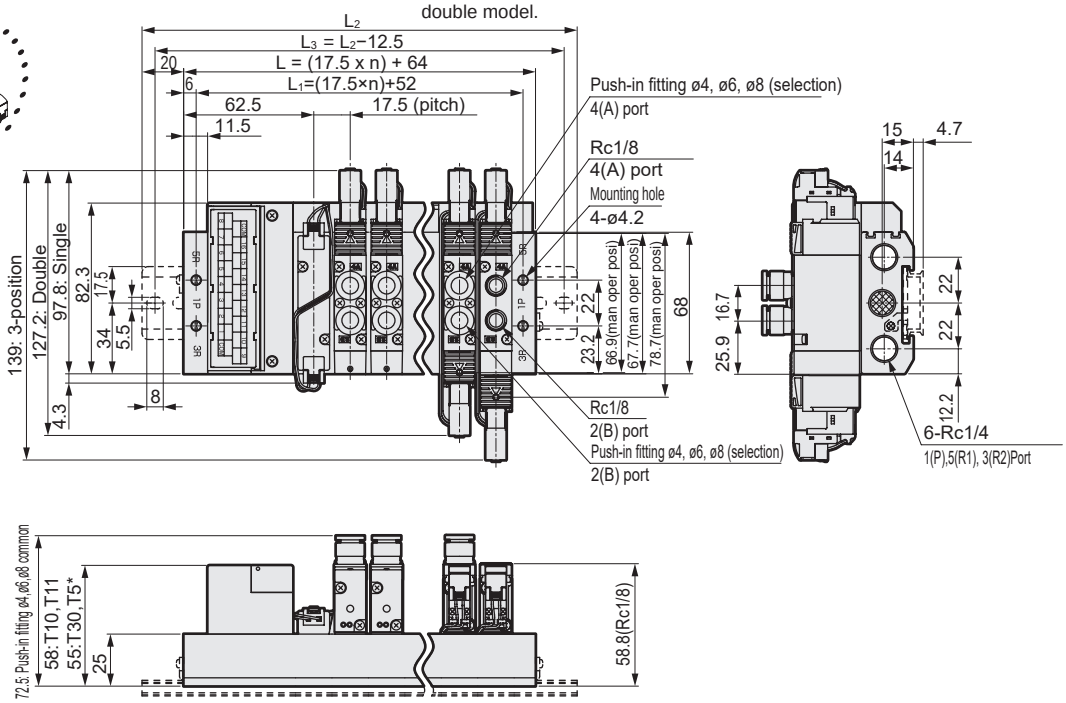

● Reduced wiring right side type (T10R/T11R/T30R/T50R/T51R/T52R/T53R)

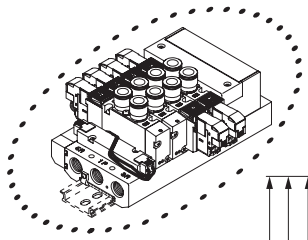

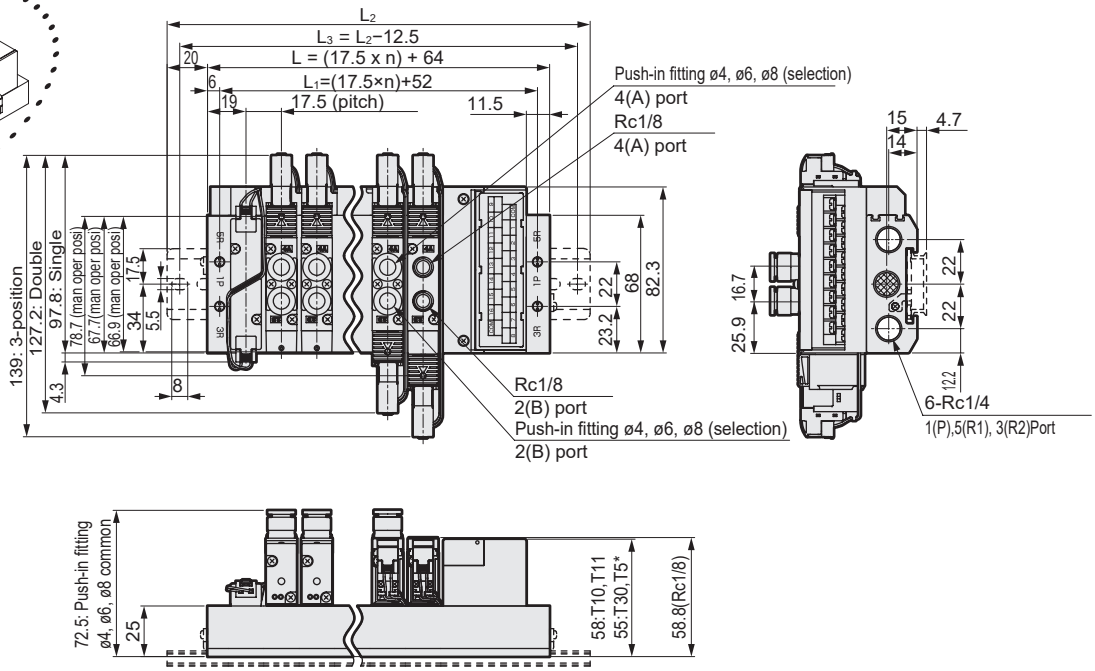

Station No.	2	3	4	5	6	7	8	9	10	11	12	13	14	15	16	17	18	19	20
L	99.0	116.5	134.0	151.5	169.0	186.5	204.0	221.5	239.0	256.5	274.0	291.5	309.0	326.5	344.0	361.5	379.0	396.5	414.0
L_1	87.0	104.5	122.0	139.5	157.0	174.5	192.0	209.5	227.0	244.5	262.0	279.5	297.0	314.5	332.0	349.5	367.0	384.5	402.0
L_2	150.0	162.5	175.0	200.0	212.5	237.5	250.0	262.5	287.5	300.0	325.0	337.5	350.0	375.0	387.5				
L_3	137.5	150.0	162.5	187.5	200.0	225.0	237.5	250.0	275.0	287.5	312.5	325.0	337.5	362.5	375.0				

Dimensions CAD

M4GD2

* For the 2-position single 3-port valve, either A port or B port is a plug. In addition, the two 3-port valve integrated has the same dimensions as the double model.

● Serial transmission (T6G1)
DIN rail mount (D)

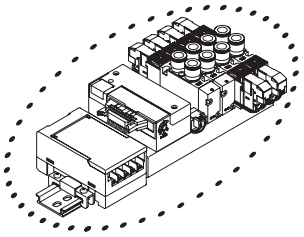

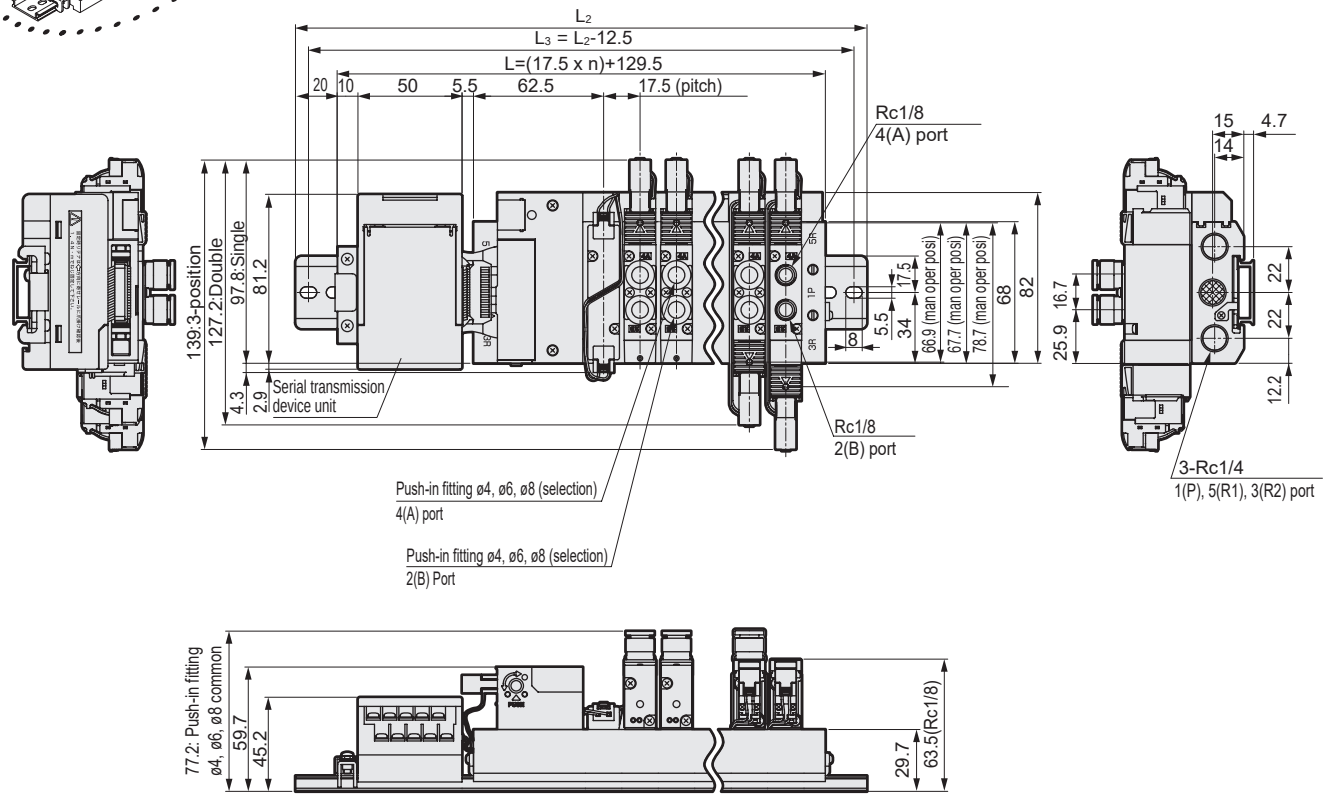

Station No.	2	3	4	5	6	7	8	9	10	11	12	13	14	15	16
L	164.5	182.0	199.5	217.0	234.5	252.0	269.5	287.0	304.5	322.0	339.5	357.0	374.5	392.0	409.5
L_2	212.5	225.0	250.0	262.5	275.0	300.0	312.5	337.5	350.0	362.5	387.5	400.0	425.0	437.5	450.0
L_3	200.0	212.5	237.5	250.0	262.5	287.5	300.0	325.0	337.5	350.0	375.0	387.5	412.5	425.0	437.5

Dimensions CAD

M4GD2

● Serial transmission (T8)
DIN rail mount (D)

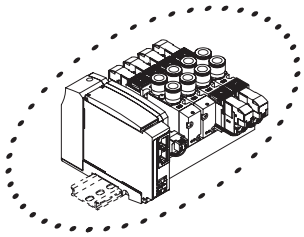

* For the 2-position single 3-port valve, either A port or B port is a plug.

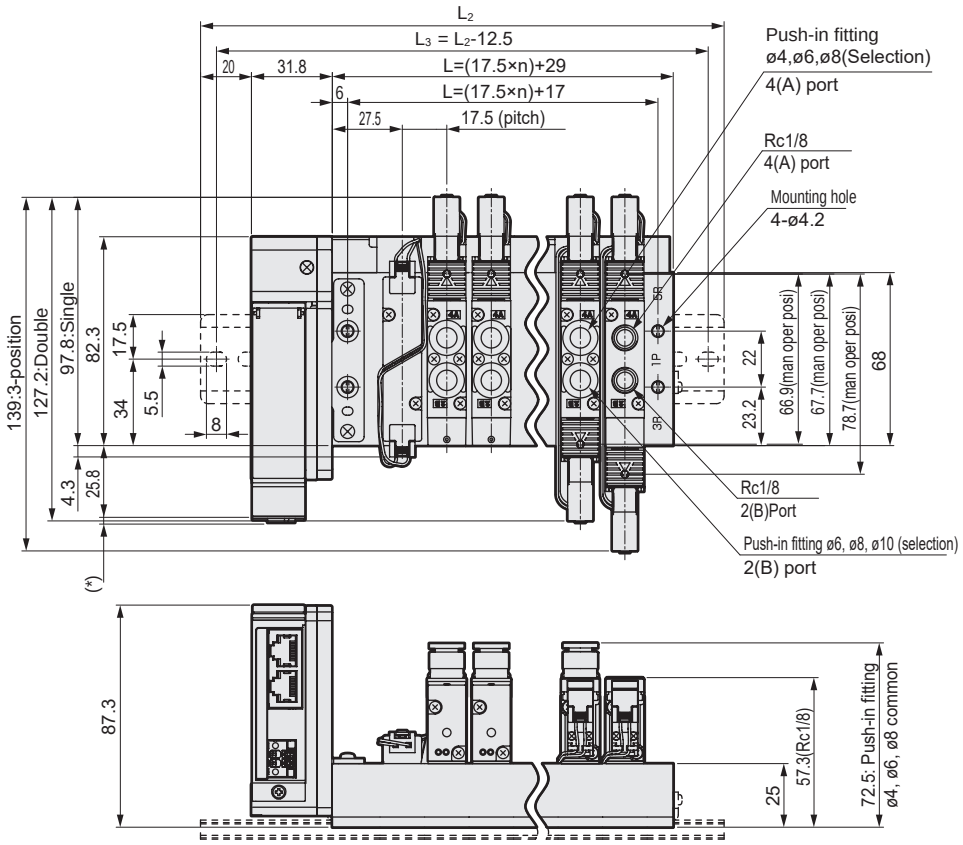

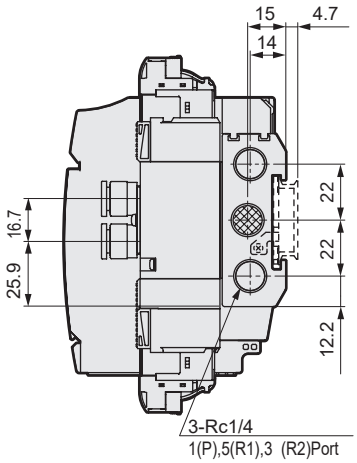

Serial transmission	* Dimensions
T8G □	1.0
T8P □	4.9
T8E □	1.5
T8D □	1.0

Station No.	2	3	4	5	6	7	8	9	10	11	12	13	14	15	16	17	18	19	20
L	64.0	81.5	99.0	116.5	134.0	151.5	169.0	186.5	204.0	221.5	239.0	256.5	274.0	291.5	309.0	326.5	344.0	361.5	379.0
L_1	52.0	69.5	87.0	104.5	122.0	139.5	157.0	174.5	192.0	209.5	227.0	244.5	262.0	279.5	297.0	314.5	332.0	349.5	367.0
L_2	137.5	162.5	175.0	200.0	212.5	225.0	250.0	262.5	287.5	300.0	312.5	337.5	350.0	375.0	387.5				
L_3	125.0	150.0	162.5	187.5	200.0	212.5	237.5	250.0	275.0	287.5	300.0	325.0	337.5	362.5	375.0				

Dimensions CAD

M4GD3

* Figure shows T10. Refer to pages 550 and 551 for detailed wiring block dimensions.
* For the 2-position single 3-port valve, either A port or B port is a plug.

● Reduced wiring left side type (T10/T11/T30/T50/T51/T52/T53)

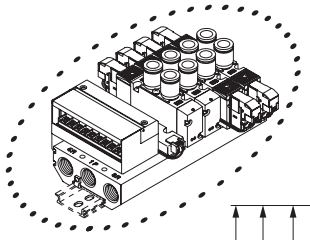

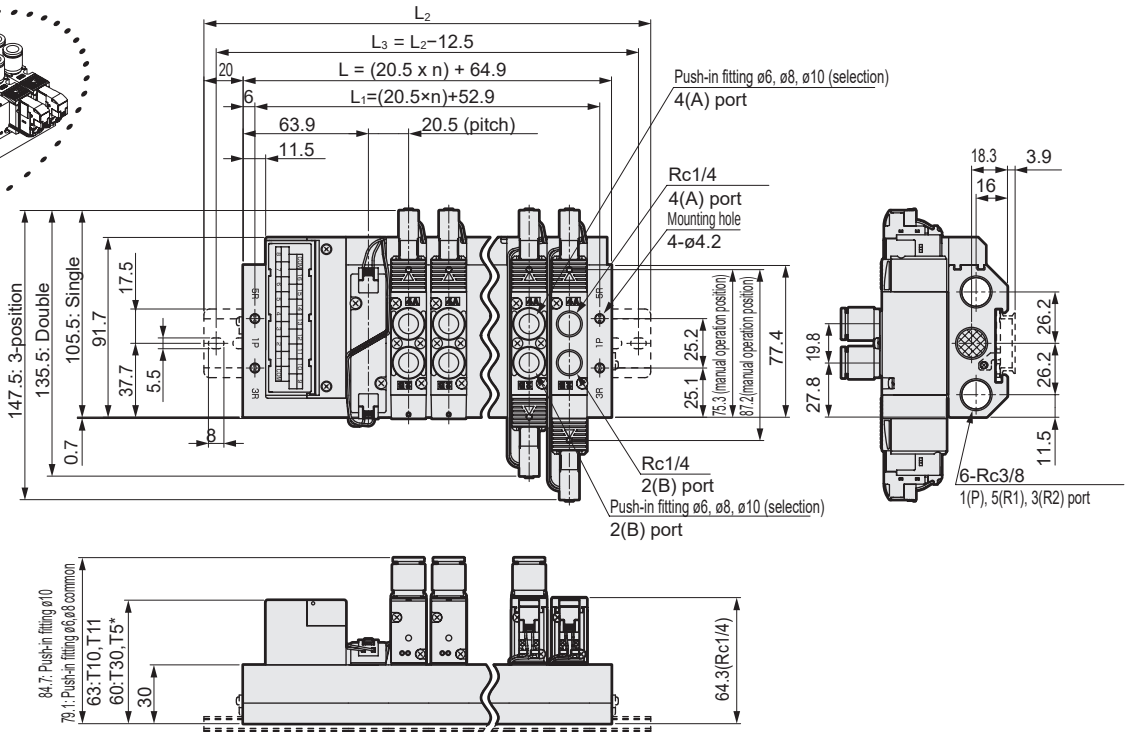

● Reduced wiring right side type (T10R/T11R/T30R/T50R/T51R/T52R/T53R)

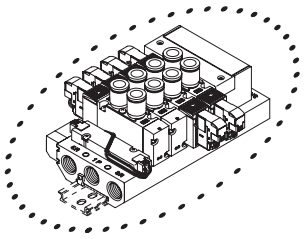

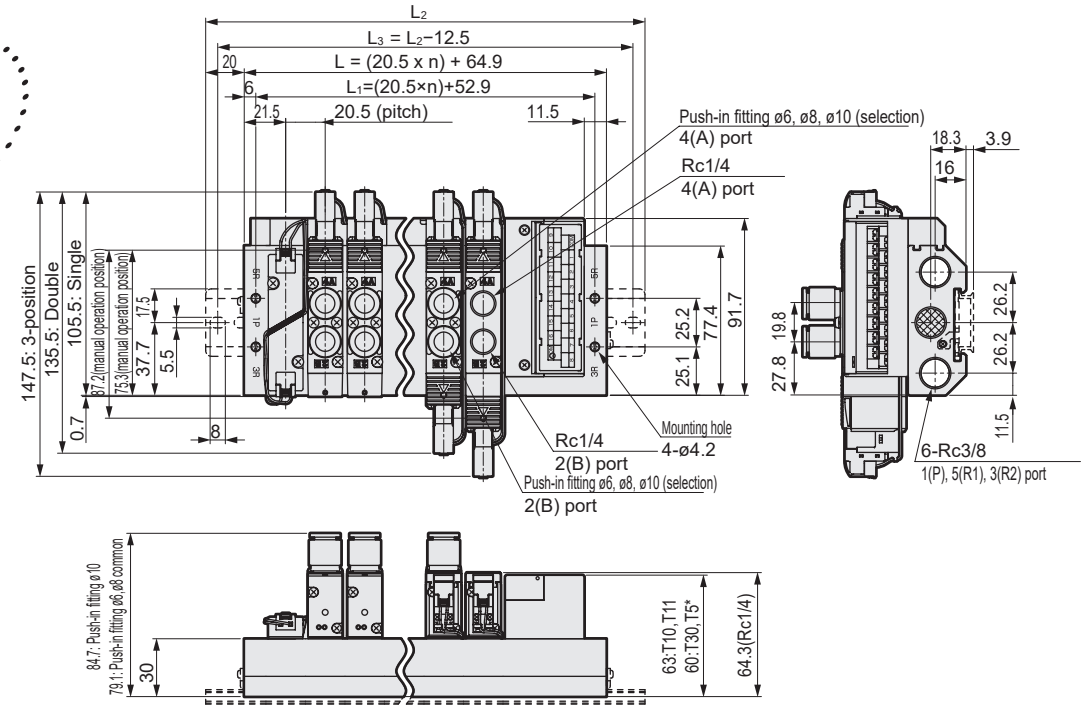

Station No.	2	3	4	5	6	7	8	9	10	11	12	13	14	15	16
L	105.9	126.4	146.9	167.4	187.9	208.4	228.9	249.4	269.9	290.4	310.9	331.4	351.9	372.4	392.9
L_1	93.9	114.4	134.9	155.4	175.9	196.4	216.9	237.4	257.9	278.4	298.9	319.4	339.9	360.4	380.9
L_2	150.0	175.0	200.0	212.5	237.5	250.0	275.0	300.0	312.5	337.5	362.5	375.0	400.0	412.5	437.5
L_3	137.5	162.5	187.5	200.0	225.0	237.5	262.5	287.5	300.0	325.0	350.0	362.5	387.5	400.0	425.0

Dimensions CAD

M4GD3

● Serial transmission (T6G1)
DIN rail mount (D)

* For the 2-position single 3-port valve, either A port or B port is a plug.

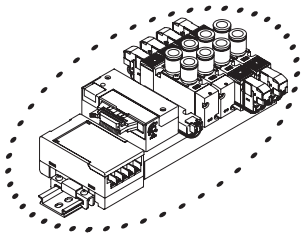

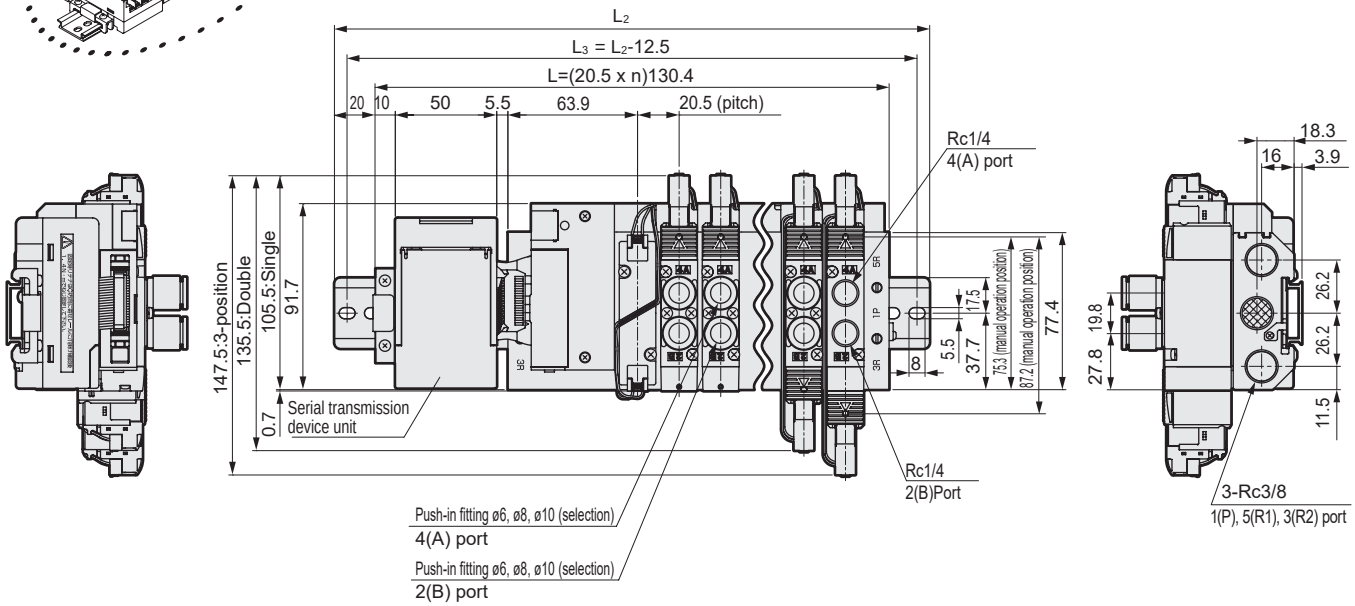

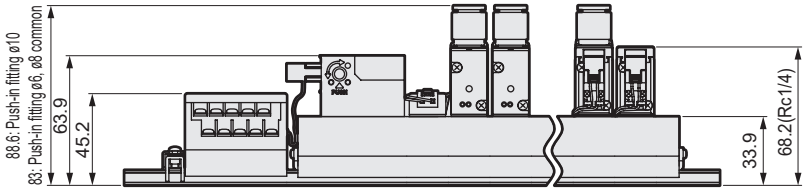

Station No.	2	3	4	5	6	7	8	9	10	11	12	13	14	15	16
L	171.4	191.9	212.4	232.9	253.4	273.9	294.4	314.9	335.4	355.9	376.4	396.9	417.4	437.9	458.4
L_2	212.5	237.5	262.5	275.0	300.0	325.0	337.5	362.5	387.5	400.0	425.0	437.5	462.5	487.5	500.0
L_3	200.0	225.0	250.0	262.5	287.5	312.5	325.0	350.0	375.0	387.5	412.5	425.0	450.0	475.0	487.5

Dimensions CAD

M4GD3

* For the 2-position single 3-port valve, either A port or B port is a plug.

● Serial transmission (T8)
DIN rail mount (D)

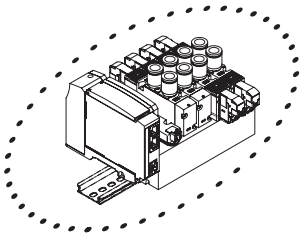

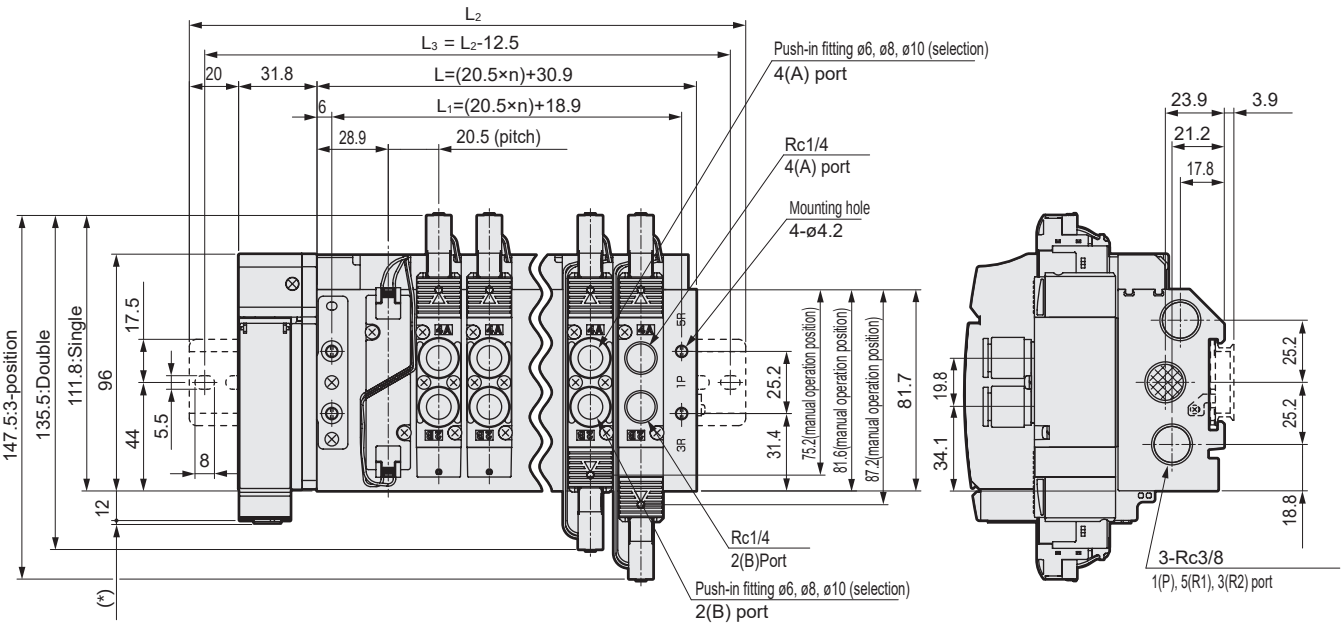

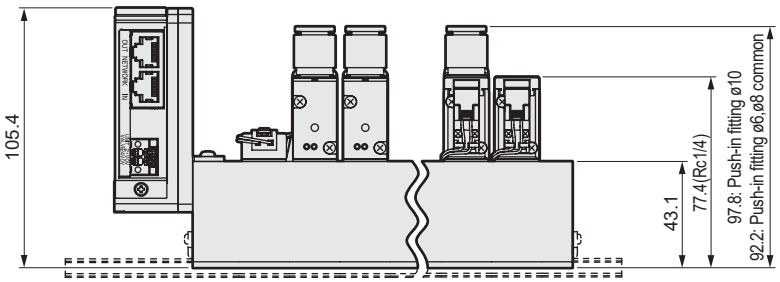

Serial transmission	* Dimensions
T8G □	1.0
T8P □	4.9
T8E □	1.5
T8D □	1.0

Station No.	2	3	4	5	6	7	8	9	10	11	12	13	14	15	16
L	71.9	92.4	112.9	133.4	153.9	174.4	194.9	215.4	235.9	256.4	276.9	297.4	317.9	338.4	358.9
L_1	59.9	80.4	100.9	121.4	141.9	162.4	182.9	203.4	223.9	244.4	264.9	285.4	305.9	326.4	346.9
L_2	150.0	175.0	187.5	212.5	237.5	250.0	275.0	287.5	312.5	337.5	350.0	375.0	400.0	412.5	437.5
L_3	137.5	162.5	175.0	200.0	225.0	237.5	262.5	275.0	300.0	325.0	337.5	362.5	387.5	400.0	425.0

MEMO

Wiring block part: Dimensions

● Common terminal block (M3 thread) T10

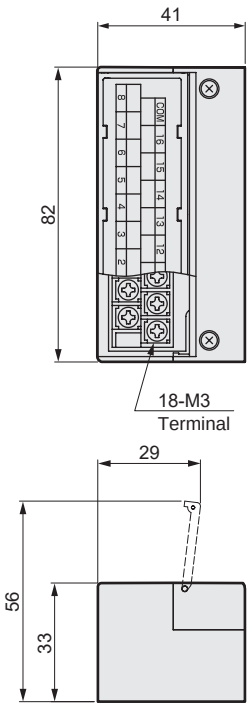

● Common terminal block (clamping) T11

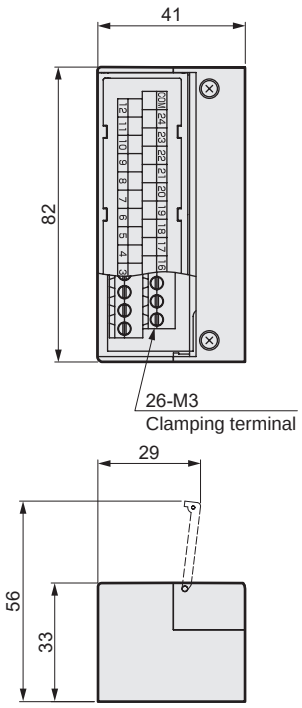

● D sub-connector T30

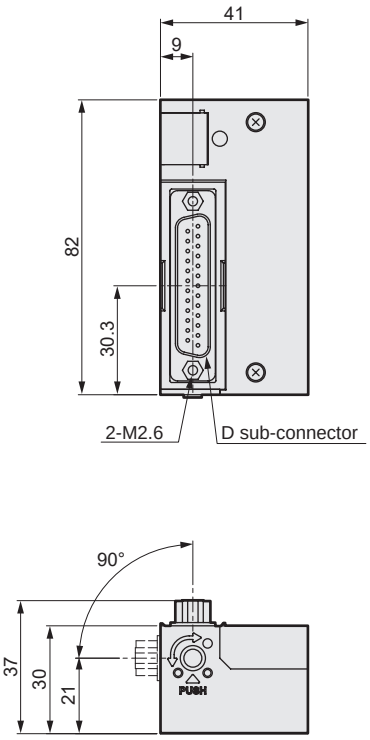

● 20-pin flat cable connector (with power supply terminal) T50

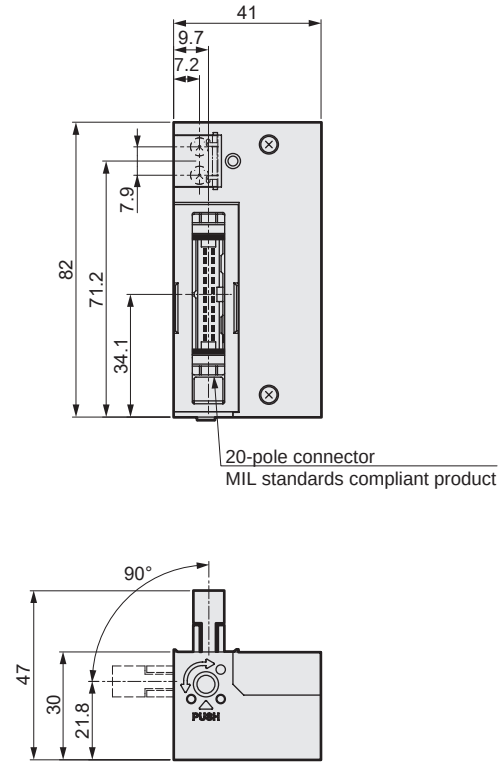

Wiring block part: Dimensions

● 20-pin flat cable connector (without power supply terminal)
T51

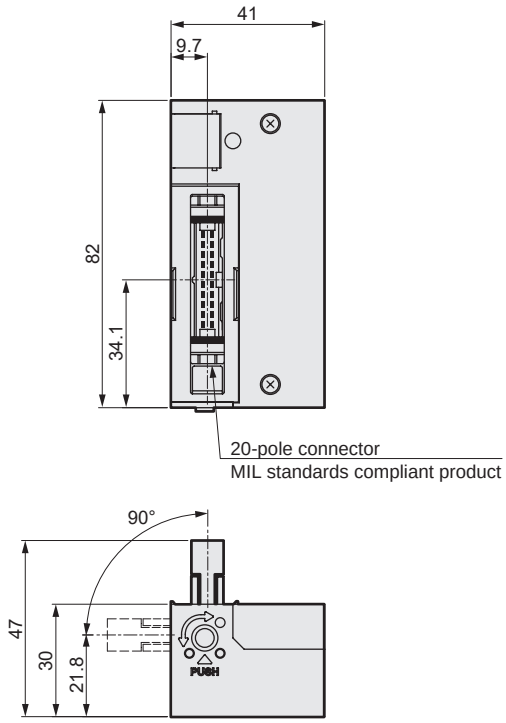

● 10-pin flat cable connector (without power supply terminal)
T52

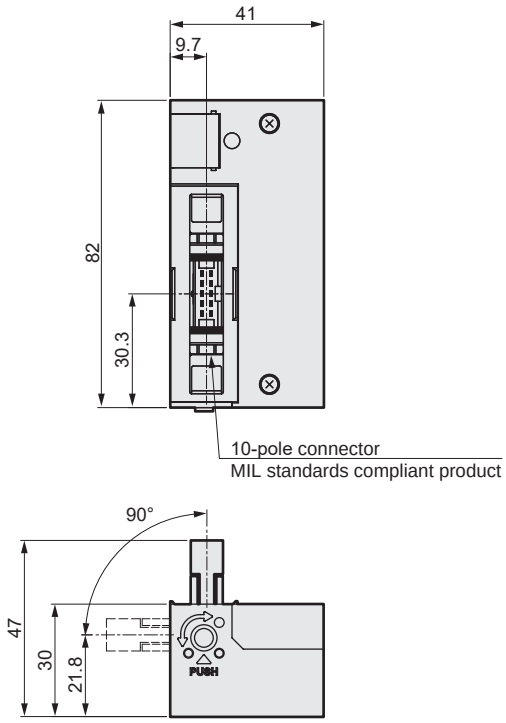

● 26-pin flat cable connector (without power supply terminal)
T53

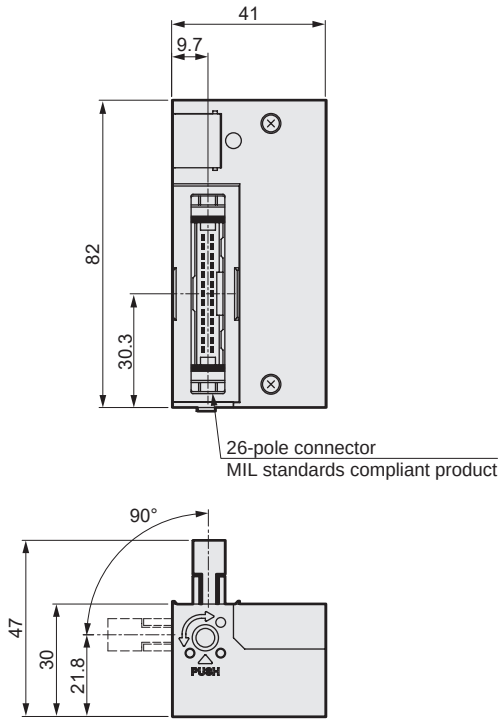

● Single unit serial transmission device (adapter) station (connector connection)

4GR – OPP3 – 1G

Ⓐ Wiring method

Code	Description			
Ⓐ Wiring method				
1G	T6G1	CC-Link	NPN	16 points

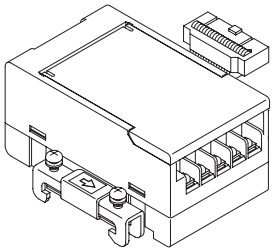

● Single unit serial transmission device (adapter) station (slim slot)

4GR – OPP7 – 2G

Ⓐ Wiring method

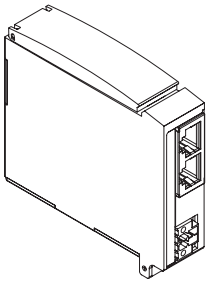

Code	Description			
Ⓐ Wiring method				
1G	T8G1	CC-Link	NPN	16 points
2G	T8G2			32 points
1G-P	T8GP1		PNP	16 points
2G-P	T8GP2			32 points
1P	T8P1	PROFIBUS-DP	NPN	16 points
2P	T8P2			32 points
1P-P	T8PP1		PNP	16 points
2P-P	T8PP2			32 points
1EC	T8EC1	EtherCAT	NPN	16 points
2EC	T8EC2			32 points
1EC-P	T8ECP1		PNP	16 points
2EC-P	T8ECP2			32 points
1EN	T8EN1	EtherNet/IP	NPN	16 points
2EN	T8EN2			32 points
1EN-P	T8ENP1		PNP	16 points
2EN-P	T8ENP2			32 points
1D	T8D1	DeviceNet	NPN	16 points
2D	T8D2			32 points
1D-P	T8DP1		PNP	16 points
2D-P	T8DP2			32 points
1EB	T8EB1	CC-Link IEF Basic	NPN	16 points
2EB	T8EB2			32 points
1EB-P	T8EBP1		PNP	16 points
2EB-P	T8EBP2			32 points
1EP	T8EP1	PROFINET	NPN	16 points
2EP	T8EP2			32 points
1EP-P	T8EPP1		PNP	16 points
2EP-P	T8EPP2			32 points

MEMO

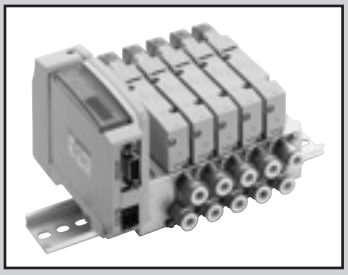

Reduced wiring manifold
Base piping
Direct mount/DIN rail mount

M3GE1/2-T*(D) Series
M4GE1/2/3-T*(D) Series

● Cylinder bore size: ø20 to ø100

RoHS CAD

JIS symbol

● Two 3-port valves integrated
(A side valve: NC, B side valve: NC)

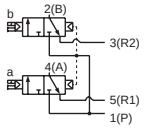

● 5-port valve

2-position single

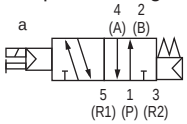

2-position double

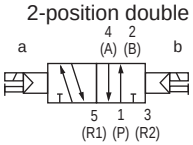

3-position all ports closed

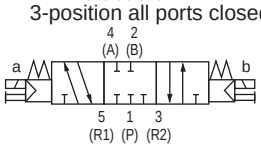

3-position A/B/R connection

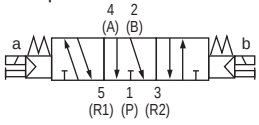

3-position P/A/B connection

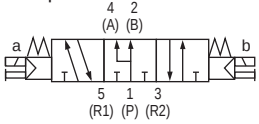

Manifold common specifications

Item		Description
Manifold		Reduced wiring integrated base
Mounting method		Direct mount/DIN rail mount
Supply and exhaust method		Common supply/common exhaust (With internal exhaust check valve)
Pilot exhaust method	Internal pilot	Main valve/pilot valve common exhaust (Standard) (Pilot exhaust check valve built-in)
Piping direction		Lateral direction from base
Valve and operation		Pilot operated soft spool valve
Working fluid		Compressed air
Max. working pressure MPa		0.7 (≈100 psi, 7 bar)
Min. working pressure MPa		0.2 (≈29 psi, 2 bar)
Proof pressure MPa		1.05 (≈150 psi, 10.5 bar)
Ambient temperature °C		-5 (23°F) to 55 (131°F) (no freezing)
Fluid temperature °C		5 (41°F) to 55 (131°F)
Manual override		Non-locking/locking common type
Lubrication (*1)		Not required
Degree of protection (*2)		Dust-proof
Vibration resistance m/s^2		50 or less
Shock resistance m/s^2		300 or less
Atmosphere		Cannot be used in corrosive gas environments

*1: Use turbine oil Class 1 ISO VG32 for lubrication.
Excessive or intermittent lubrication results in unstable operation.
*2: Avoid dripping water or oil, etc., during use.

Electrical specifications

Item		Description		
		T1□, T30□, T5□		T6G1, T8□
Rated voltage	V	24 DC	12 DC	24 DC
Voltage fluctuation range	(*3)	±10%		+10%, -5%
Holding current	A	0.017	0.034	0.017
Power consumption	W	0.4		
Thermal class		B		
Surge suppressor		Zener diode		
Indicator		LED		

*3: T6G1 and T8□ (serial transmission) may experience voltage drops due to internal circuitry, so care should be taken when regulating voltages.

Manifold individual specifications

Common specifications

Item		M3GE1/M4GE1	M3GE2/M4GE2	M3GE3/M4GE3
Port size	A/B Port	Push-in fitting ø4, ø6 M5	Push-in fitting ø4, ø6, ø8 Rc1/8	Push-in fitting ø6, ø8, ø10 Rc1/4
	P/R1/R2 port	Rc1/8	Rc1/4	Rc3/8

T1□, T30□, T5□

Item	M3GE1/M4GE1		M3GE2/M4GE2		M3GE3/M4GE3	
	Direct mount	DIN rail mount	Direct mount	DIN rail mount	Direct mount	DIN rail mount
Max. station No.	20 stations	16 stations	20 stations	16 stations	16 stations	
Manifold base weight calculation formula (n: station No.) g	43n+335	45n+348	80n+398	82n+431	124n+548	126n+562

T6G1

Item	M3GE1/M4GE1	M3GE2/M4GE2	M3GE3/M4GE3
	DIN rail mount	DIN rail mount	DIN rail mount
Max. station No.	16 stations	16 stations	16 stations
Manifold base weight calculation formula (n: station No.) g	45n+495	82n+578	126n+729

T8□

Item	M3GE1/M4GE1		M3GE2/M4GE2		M3GE3/M4GE3	
	Direct mount	DIN rail mount	Direct mount	DIN rail mount	Direct mount	DIN rail mount
Max. station No.	20 stations	16 stations	20 stations	16 stations	16 stations	
Manifold base weight calculation formula (n: station No.) g	46n+305	49n+332	83n+318	86n+350	128n+384	132n+416

The manifold base weight is the value for screw connection specifications with DIN rail, wiring block or device unit.
The max. station number of the manifold is limited by the max. number of solenoid for each of the following wiring specifications.

Flow characteristics

Model No.	Solenoid position		P → A/B		A/B→R1/R2			
			C[dm³/(s·bar)]	b	C[dm³/(s·bar)]		b	
M3GE1 M4GE1	Two 3-port valves integrated		0.86	0.35	1.1	(0.67)	0.22	(0.23)
	2-position		1.1	0.22	1.2	(0.70)	0.20	(0.10)
	3-position	All ports closed	0.98	0.22	1.1	—	0.24	—
		ABR connection	0.97	0.35	1.3	(0.68)	0.22	(0.24)
		PAB connection	1.1	0.38	1.1	—	0.21	—
M3GE2 M4GE2	Two 3-port valves integrated		1.7	0.44	2.1	(1.6)	0.32	(0.30)
	2-position		2.4	0.34	2.7	(1.7)	0.24	(0.31)
	3-position	All ports closed	2.2	0.34	2.4	—	0.29	—
		ABR connection	2.2	0.34	2.8	(1.8)	0.24	(0.27)
		PAB connection	2.4	0.29	2.4	—	0.29	—
M4GE3	2-position		3.5	0.34	3.8	(2.6)	0.11	(0.27)
	3-position	All ports closed	3.1	0.33	3.3	—	0.22	—
		ABR connection	3.0	0.30	3.8	(2.7)	0.11	(0.22)
		PAB connection	3.6	0.36	3.3	—	0.28	—

*1: Effective cross-sectional area S and sonic conductance C are converted as S ≈ 5.0 × C.
*2: Values in ( ) are with the exhaust check valve.

Wiring specifications

Item	T10□ Common terminal block	T11□ Common terminal block	T30□ D-sub-connector	T50□ Flat cable 20-pin	T51□ Flat cable 20-pin	T52□ Flat cable 10-pin	T53□ Flat cable 26-pin
Connector and terminal block specifications	M3 thread fastening 18 terminals	Clamping 26 terminals	D-sub-connector 25-pin	MIL-C-83503 standard compliant pressure welding socket 20-pin	MIL-C-83503 standard compliant pressure welding socket 20-pin	MIL-C-83503 standard compliant pressure welding socket 10-pin	MIL-C-83503 standard compliant pressure welding socket 26-pin
Max. number of solenoids	16 points	24 points	24 points	16 points	18 points	8 points	24 points
Manifold internal wiring	Details on pages 816 to 823						
Wiring block position Blank: Left side R: Right side	**Left side: T □** a solenoid side b solenoid side Wiring block 1st station 2nd station 3rd station ... 6th station			**Right side: T □ R** a solenoid side b solenoid side 1st station 2nd station 3rd station ... 6th station Wiring block			
Array method Blank: Standard sequential W: Double wiring	**(Ex.) In the case of T50 □** Manifold specifications 1a 2a 3a 4a S D S D 2b 4b 1st station 3rd station 2nd station 4th station			Standard wiring (sequential): Blank Connector pin No. 1 2 3 4 5 6 Valve solenoid No. 1a 2a 2b 3a 4a 4b		Double wiring: W Connector pin No. 1 2 3 4 5 6 7 8 Valve solenoid No. 1a Blank 2a 2b 3a Blank 4a 4b	

Serial transmission device unit specifications

Download the communication setting file from the CKD website (https://www.ckd.co.jp/en/).

Item		T6G1 *1
Network name		CC-Link ver1.10
Power supply voltage	Unit side	24 VDC ±10%
	Valve side	24 VDC +10% −5%
Current consumption	Unit side	100mA or less (when all output points are ON)
	Valve side	15 mA or less (when all output points are OFF)
No. of output points		16 points
Occupied number		1 station
Operation display		LED (power supply and communication status)

*1: CC-Link is ver. 1.10.

Item		T8G1 T8G2	T8GP1 T8GP2	T8P1 T8P2	T8PP1 T8PP2	T8EC1 T8EC2	T8ECP1 T8ECP2	T8EN1 T8EN2	T8ENP1 T8ENP2	T8D1 T8D2	T8DP1 T8DP2	T8EB1 T8EB2	T8EBP1 T8EBP2	T8EP1 T8EP2	T8EPP1 T8EPP2
Communication protocol		CC-Link ver. 1.10		PROFIBUS-DP (V0)		EtherCAT		EtherNet/IP		DeviceNet		CC-Link IEF Basic		PROFINET	
Power supply voltage	Unit side	24 VDC ±10%								11 to 25 VDC		24 VDC ±10%			
	Valve side	24 VDC+10%, -5%													
Current consumption	Unit side	60 mA or less (when all output points are ON)		60 mA or less (when all output points are ON)		110 mA or less (when all output points are ON)		120 mA or less (when all output points are ON)		70 mA or less (when all output points are ON)		130 mA or less (when all output points are ON)		130 mA or less (when all output points are ON)	
	Valve side	T8 □ 1:15mA or less T8 □ 2:20mA or less (when all output points are ON) Load current is not included								15 mA or less (When all output points are ON) Load current is not included					
No. of output points		T8 □ 1: 16 points T8 □ 2: 32 points													
Occupied number		1 station													
Operation display		LED (power supply and communication status)													
Output		NPN output	PNP output	NPN output	PNP output	NPN output	PNP output	NPN output	PNP output	NPN output	PNP output	NPN output	PNP output	NPN output	PNP output

M4GE1/2/3-T*(D) Series

Reduced wiring manifold; base piping

How to order

Manifold model No.

M 4GE1 1 0R - C6 - T30 W H D - ○ - 3

3-port manifold model No.

M 3GE1 66 0R - C6 - T30 H D - ○ - 3

Discrete valve for mounting base

4GE1 1 9R - 00 - A2N H — 3

3-port discrete valve for mounting base

3GE1 66 9R - 00 - A2N H — 3

- 3GE1 66 → Ⓑ Solenoid position
- 4GE1 1 → Ⓐ Model No.
- 00 → Ⓒ Port size
- A2N indicates the A type (downward) connector, with lamp/surge suppressor and without lead wire.
- W → Ⓔ Terminal/connector pin array
- H → Ⓕ Option
- D → Ⓓ Reduced wiring
  Zener diode is used as a surge suppressor.
- ○ → Ⓖ Mount
- 3 → Ⓘ Voltage

● Refer to page 819 for the model No. of cables with D sub-connector.
● Refer to page 815 for the model No. of cables for flat cable connector.

Precautions for model No. selection

*1 : Select M4GE*80R when mixing with 3, 5-port valves.
Further, select M3GE*80R when mixing with masking plate.
*2 : Dimensions are the same as the respective 2-position double solenoid.
3 : CL push-in L fitting (upward) is compatible only with the single solenoid manifold. Long elbow is for A port and short elbow for B port.
*4 : A and B ports are the same size for push-in L fitting.
*5 : Blank...The wiring will be based on the type of valve used.
W*...All wired for double solenoid valves regardless of the type of valve used.
*6 : 3-position all ports closed and PAB connection are not provided with the exhaust check valve specifications (H). Refer to page 851 for details on the exhaust check valve.
*7 : A filter is built into the P-port as standard.
*8 : Specify the spacer mounting position/ quantity in manifold specifications sheet.
Stacking of spacers is not possible.
Combination with the masking plate is not supported.
Refer to pages 576 to 580 for details.
*9 : The direct mount of M4GE1 cannot be changed after purchase to the DIN rail mount.

* Be sure to fill in the "Manifold specifications sheet" (pages 597 to 608).

Code	Description	Ⓐ Model No. 3GE1	3GE2	4GE1	4GE2	4GE3
Ⓑ Solenoid position						
1	2-position single			●	●	●
2	2-position double			●	●	●
3	3-position all ports closed			●	●	●
4	3-position ABR connection			●	●	●
5	3-position PAB connection			●	●	●
66	Two 3-port valves integrated (*1) (*2) — A side valve: Normally closed	●	●			
	Two 3-port valves integrated (*1) (*2) — B side valve: Normally closed	●	●			
8	Mix manifold (when there are multiple solenoid positions)	●	●	●	●	●
Ⓒ Port size						
Port	4(A), 2(B) port	P/R1/R2 port (2)=Rc1/8 (3)=Rc1/4 (4)=Rc3/8				
C4	ø4 push-in fitting	(2)	(3)	(2)	(3)	
C6	ø6 push-in fitting	(2)	(3)	(2)	(3)	(4)
C8	ø8 push-in fitting		(3)		(3)	(4)
C10	ø10 push-in fitting					(4)
CL4	ø4 push-in L-fitting (upward) (*3) (*4)			(2)		
CL6	ø6 push-in L-fitting (upward) (*3) (*4)			(2)	(3)	
CL8	ø8 push-in L-fitting (upward) (*3) (*4)				(3)	(4)
CL10	ø10 push-in L-fitting (upward) (*3) (*4)					(4)
CD4	ø4 push-in L-fitting (downward) (*4)	(2)		(2)		
CD6	ø6 push-in L-fitting (downward) (*4)	(2)	(3)	(2)	(3)	
CD8	ø8 push-in L-fitting (downward) (*4)		(3)		(3)	(4)
CD10	ø10 push-in L-fitting (downward) (*4)					(4)
CX	Push-in fitting mix	(2)	(3)	(2)	(3)	(4)
M5	M5	(2)		(2)		
06	Rc1/8		(3)		(3)	
08	Rc1/4					(4)
00	Discrete valve for mounting base	●	●	●	●	●
Ⓓ Reduced wiring (lamp and surge suppressor provided as standard)						
	Refer to the next page for electrical connections.					
Ⓔ Terminal/connector pin array						
Blank	Standard wiring (*5)	●	●	●	●	●
W	Double wiring (*5)	●	●	●	●	●
Ⓕ Option						
Blank	Non-locking/locking common manual override	●	●	●	●	●
H	With exhaust check valve (*6)	●	●	●	●	●
A	Ozone/coolant proof	●	●	●	●	●
F	A/B port filter built in (*7)	●	●	●	●	●
Z1	Air supply spacer (*8)	●	●	●	●	●
Z2	In-stop valve spacer (*8)	●	●	●	●	●
Z3	Exhaust spacer (*8)	●	●	●	●	●
Ⓖ Mount						
Blank	Direct mount (*9)	●	●	●	●	●
D	DIN rail mount	●	●	●	●	●
Ⓗ Station No.						
2	2 stations	●	●	●	●	●
to	to					
20	Refer to page 554 for the max. station number per model.					
Ⓘ Voltage						
3	24 VDC	●	●	●	●	●
4	12 VDC	●	●	●	●	●

is not available.

Code	Description		Ⓐ Model No. 3GE1	3GE2	4GE1	4GE2	4GE3
Ⓓ Reduced wiring connection (lamp and surge suppressor equipped as standard) 12/24 VDC							
T10	Common terminal block (M3 thread)	Left-sided specs.	●	●	●	●	●
T10R		Right-sided specs.	●	●	●	●	●
T11	Common terminal block (clamping)	Left-sided specs.	●	●	●	●	●
T11R		Right-sided specs.	●	●	●	●	●
T30	D-sub-connector	Left-sided specs.	●	●	●	●	●
T30R		Right-sided specs.	●	●	●	●	●
T50	20-pin flat cable connector (with common power supply terminal)	Left-sided specs.	●	●	●	●	●
T50R		Right-sided specs.	●	●	●	●	●
T51	20-pin flat cable connector (no power supply terminal)	Left-sided specs.	●	●	●	●	●
T51R		Right-sided specs.	●	●	●	●	●
T52	10-pin flat cable connector (no power supply terminal)	Left-sided specs.	●	●	●	●	●
T52R		Right-sided specs.	●	●	●	●	●
T53	26-pin flat cable connector (no power supply terminal)	Left-sided specs.	●	●	●	●	●
T53R		Right-sided specs.	●	●	●	●	●
Ⓓ Serial transmission (lamp/surge suppressor equipped as standard) 24 VDC							
T6G1	CC-Link(Connector)	NPN 16 points	●	●	●	●	●
T8G1	CC-Link (thin type)	NPN 16 points	●	●	●	●	●
T8G2		NPN 32 points	●	●	●	●	●
T8GP1		PNP 16 points	●	●	●	●	●
T8GP2		PNP 32 points	●	●	●	●	●
T8P1	PROFIBUS-DP (thin type)	NPN 16 points	●	●	●	●	●
T8P2		NPN 32 points	●	●	●	●	●
T8PP1		PNP 16 points	●	●	●	●	●
T8PP2		PNP 32 points	●	●	●	●	●
T8EC1	EtherCAT (thin type)	NPN 16 points	●	●	●	●	●
T8EC2		NPN 32 points	●	●	●	●	●
T8ECP1		PNP 16 points	●	●	●	●	●
T8ECP2		PNP 32 points	●	●	●	●	●
T8EN1	EtherNet/IP (thin type)	NPN 16 points	●	●	●	●	●
T8EN2		NPN 32 points	●	●	●	●	●
T8ENP1		PNP 16 points	●	●	●	●	●
T8ENP2		PNP 32 points	●	●	●	●	●
T8D1	DeviceNet (Thin)	NPN 16 points	●	●	●	●	●
T8D2		NPN 32 points	●	●	●	●	●
T8DP1		PNP 16 points	●	●	●	●	●
T8DP2		PNP 32 points	●	●	●	●	●
T8EB1	CC-Link IEF Basic (Thin)	NPN 16 points	●	●	●	●	●
T8EB2		NPN 32 points	●	●	●	●	●
T8EBP1		PNP 16 points	●	●	●	●	●
T8EBP2		PNP 32 points	●	●	●	●	●
T8EP1	PROFINET (Thin)	NPN 16 points	●	●	●	●	●
T8EP2		NPN 32 points	●	●	●	●	●
T8EPP1		PNP 16 points	●	●	●	●	●
T8EPP2		PNP 32 points	●	●	●	●	●
A2N	Without lead wire (without socket) With surge suppressor/lamp		●	●	●	●	●

Ozone-proof specifications • Coolant proof specifications

Can be selected with option "A" of Item Ⓕ in How to order on page 556.

Specifications for rechargeable battery (Catalog No. CC-1226A)

● For use in the rechargeable battery manufacturing process, materials used for air path and sliding section are limited

** - Voltage - **P4**

CE marking specifications

** - Voltage - **ST**

- Standard voltage of DC24V or less is CE marking-compatible even if the model No. is not indicated with "ST".

Manifold components explanation and parts list

- T10/T10R
- T11/T11R
- T30/T30R
- T50/T50R
- T51/T51R
- T52/T52R
- T53/T53R

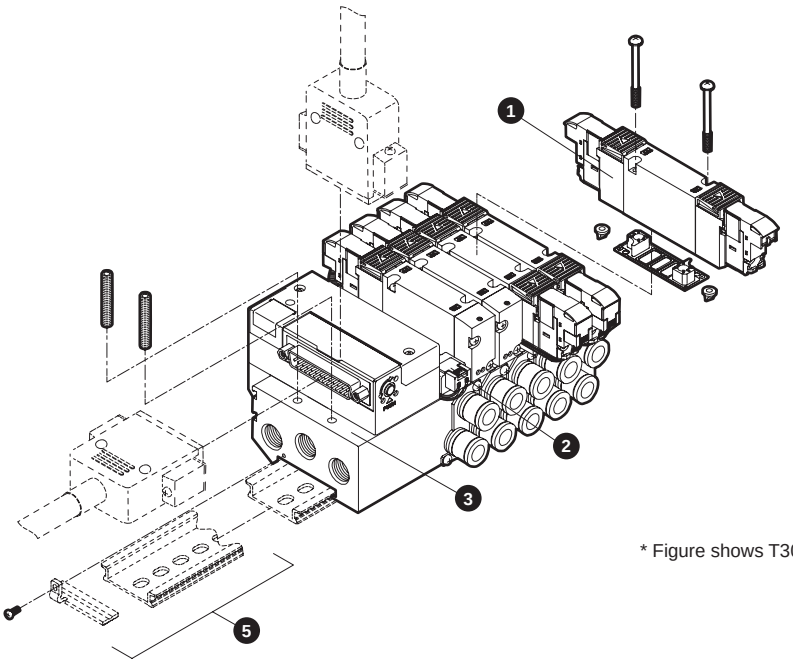

* Figure shows T30.

- T6G1

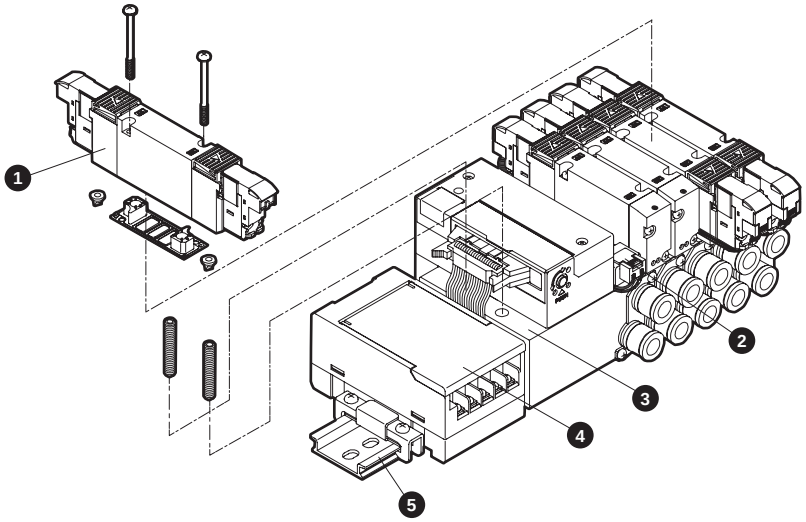

- T8*

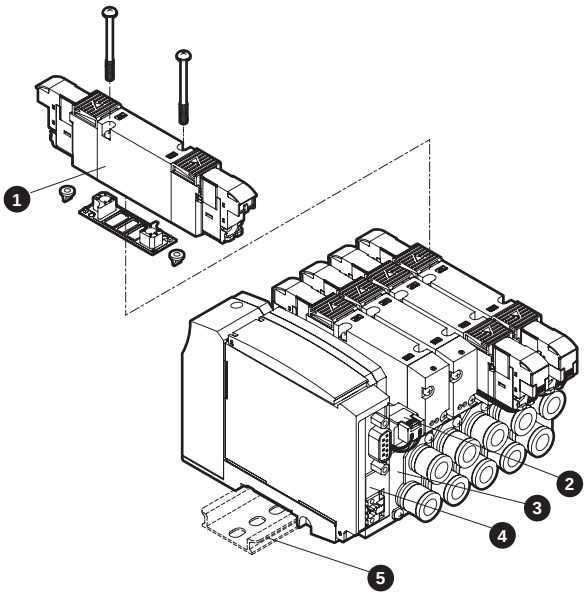

Main parts list

Part No.	Configuration parts name		Model No.	Description	Remarks
1	Discrete valve for integrated base		3/4GE□□9R-00-A2N Option - voltage Solenoid position Series flow rate size	Discrete valve Gasket 2 mounting screws (2 PR check valves)	Details on page 556
2	Masking plate	3G1/4G1	4G1R-MP	Masking plate Gasket Mounting screws 2	* 4G3R-MP has two PR check valves included.
		3G2/4G2	4G2R-MP		
		3G2/4G3	4G3R-MP		
3	Manifold base assembly		M4GE □R - Port size - T* - option - station No. Reduced wiring connection Series flow rate size	Manifold base Wiring block	
4	Serial transmission device unit		4GR-OPP3- Wiring method	Discrete serial transmission device unit (connector type)	Details on page 574
			4GR-OPP7- wiring method	Discrete serial transmission device unit (thin slot type)	
5	DIN rail kit		4GB□R-BAA Rail length - D Series flow rate size		Details on page 585

Parts list

Part No.	Part name	Model No.
-	Coil assembly	4GR-A2N- □ -COIL- Voltage Blank: Standard A: Ozone/coolant proof
-	A-connector Socket assembly Details on page 837	Series flow rate size 4G □R-SOCKET-ASSY-A □□ - Row No. Blank: Left side, R: Right side a: aSOL side, b: bSOL side n: Specify position of valve to be connected

Part No.	Part name			Model No.
-	Cartridge push-in fitting and related parts	4G1	ø4 straight	4G1R-JOINT-C4
			ø6 straight	4G1R-JOINT-C6
			ø4 elbow	4G1R-JOINT-CL4,CLL4
			ø6 elbow	4G1R-JOINT-CL6,CLL6
			Plug cartridge	4G1R-JOINT-CPG
		4G2	ø4 straight	4G2R-JOINT-C4
			ø6 straight	4G2R-JOINT-C6
			ø8 straight	4G2R-JOINT-C8
			ø6 elbow	4G2R-JOINT-CL6,CLL6
			ø8 elbow	4G2R-JOINT-CL8,CLL8
			Plug cartridge	4G2R-JOINT-CPG
		4G3	ø6 straight	4G3R-JOINT-C6
			ø8 straight	4G3R-JOINT-C8
			ø10 straight	4G3R-JOINT-C10
			ø8 elbow	4G3R-JOINT-CL8,CLL8
			ø10 elbow	4G3R-JOINT-CL10,CLL10
			Plug cartridge	4G3R-JOINT-CPG

Dimensions CAD

M4GE1

*1 Figure shows T10. Refer to pages 570 and 571 for detailed wiring block dimensions.
*2 The two 3-port valve integrated has the same dimensions as the double model.

● Reduced wiring left side (T10/T11/T30/T50/T51/T52/T53)

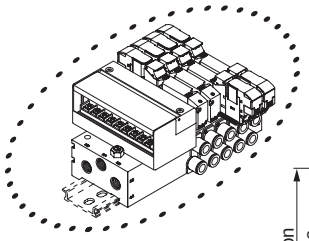

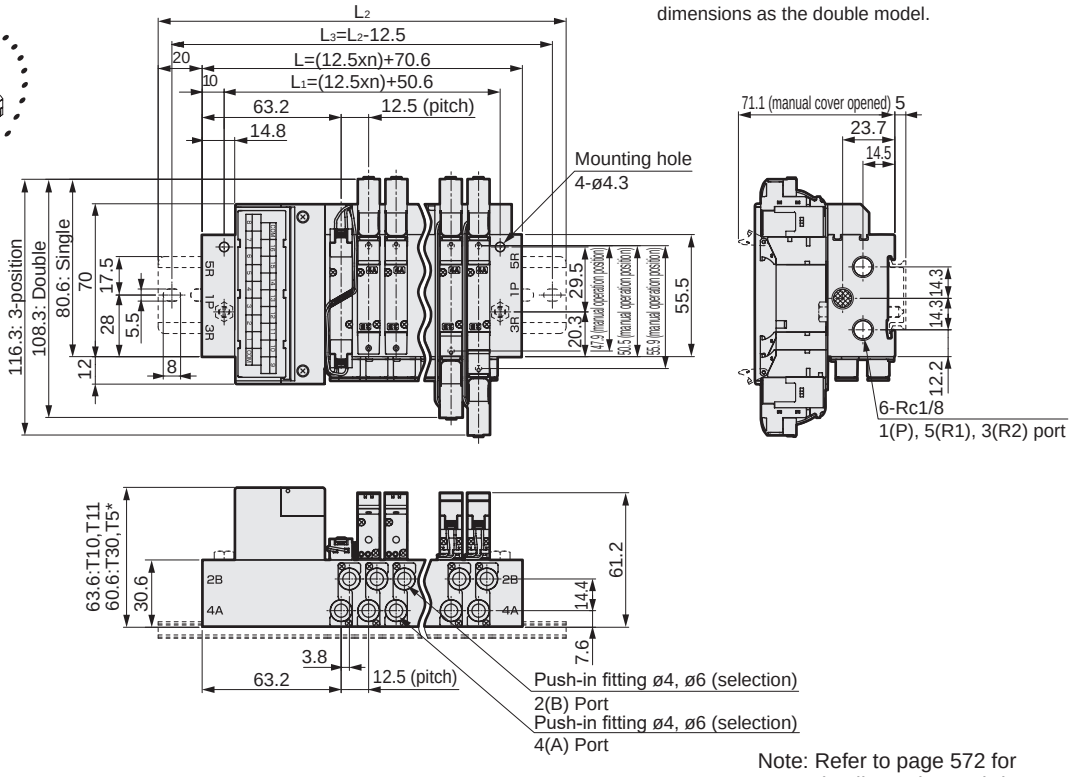

Note: Refer to page 572 for details on the push-in fitting elbow (upward) (downward).

● Reduced wiring right side (T10R/T11R/T30R/T50R/T51R/T52R/T53R)

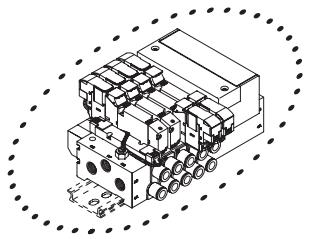

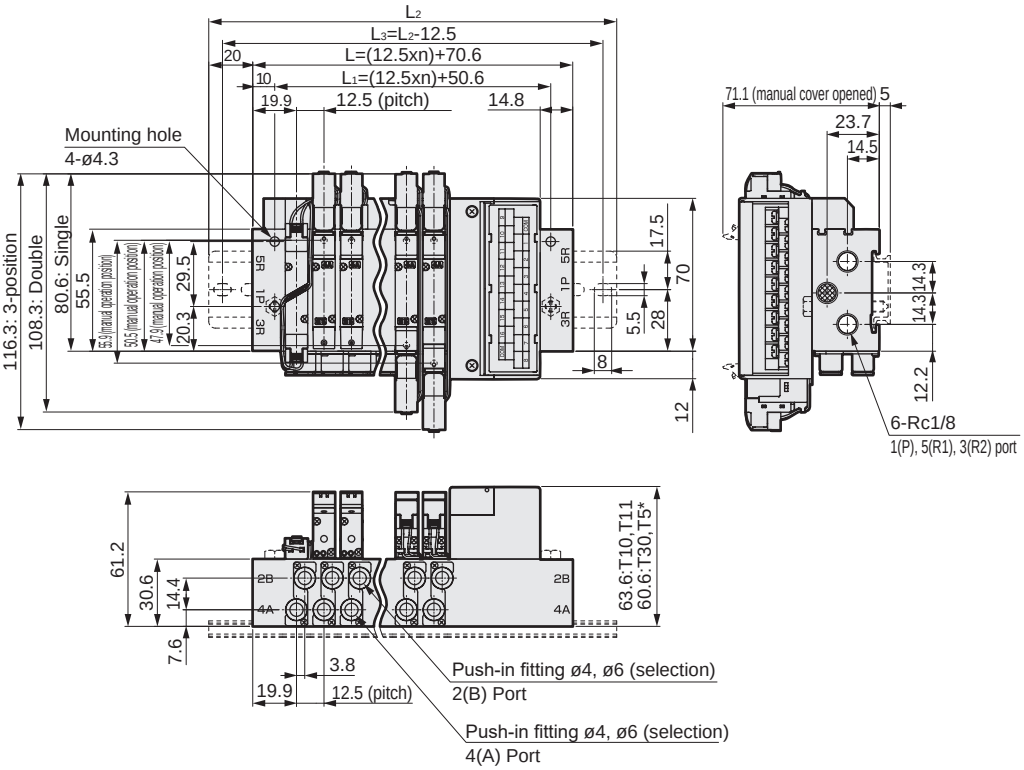

Stn No.	2	3	4	5	6	7	8	9	10	11	12	13	14	15	16	17	18	19	20
L	95.6	108.1	120.6	133.1	145.6	158.1	170.6	183.1	195.6	208.1	220.6	233.1	245.6	258.1	270.6	283.1	295.6	308.1	320.6
L_1	75.6	88.1	100.6	113.1	125.6	138.1	150.6	163.1	175.6	188.1	200.6	213.1	225.6	238.1	250.6	263.1	275.6	288.1	300.6
L_2	137.5	150.0	162.5	175.0	187.5	200.0	212.5	225.0	237.5	250.0	262.5	275.0	287.5	300.0	312.5				
L_3	125.0	137.5	150.0	162.5	175.0	187.5	200.0	212.5	225.0	237.5	250.0	262.5	275.0	287.5	300.0				

Dimensions

M4GE1

● Serial transmission (T6G1)
DIN rail mounting (D)

* The two 3-port valve integrated has the same dimensions as the double.

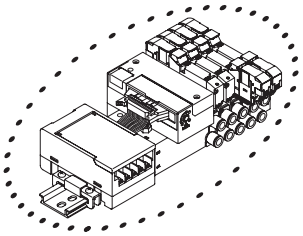

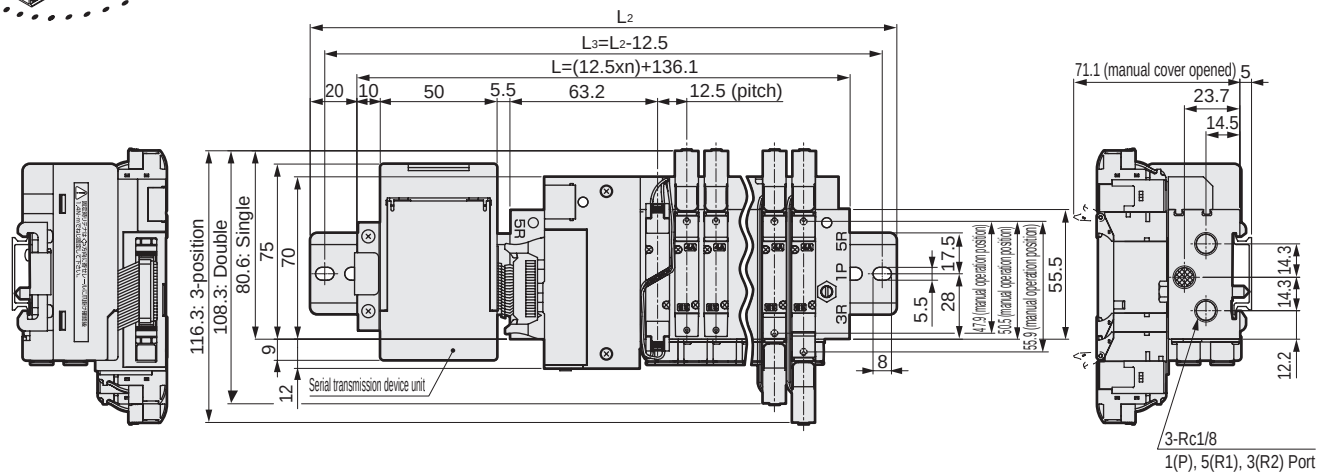

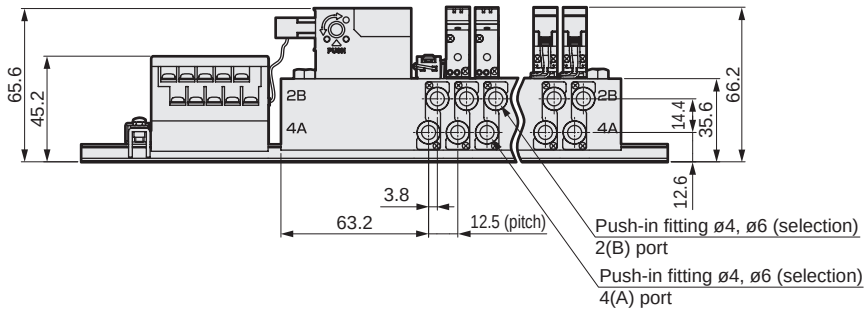

Stn No.	2	3	4	5	6	7	8	9	10	11	12	13	14	15	16
L	161.1	173.6	186.1	198.6	211.1	223.6	236.1	248.6	261.1	273.6	286.1	298.6	311.1	323.6	336.1
L_2	212.5	225.0	237.5	250.0	262.5	275.0	287.5	300.0	312.5	325.0	337.5	350.0	362.5	375.0	387.5
L_3	200.0	212.5	225.0	237.5	250.0	262.5	275.0	287.5	300.0	312.5	325.0	337.5	350.0	362.5	375.0

Dimensions CAD

M4GE1

● Serial transmission (T8)
DIN rail mounting (D)

* The two 3-port valve integrated has the same dimensions as the double.

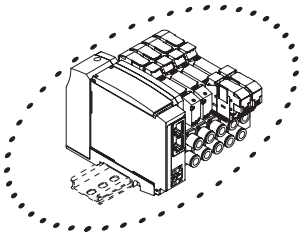

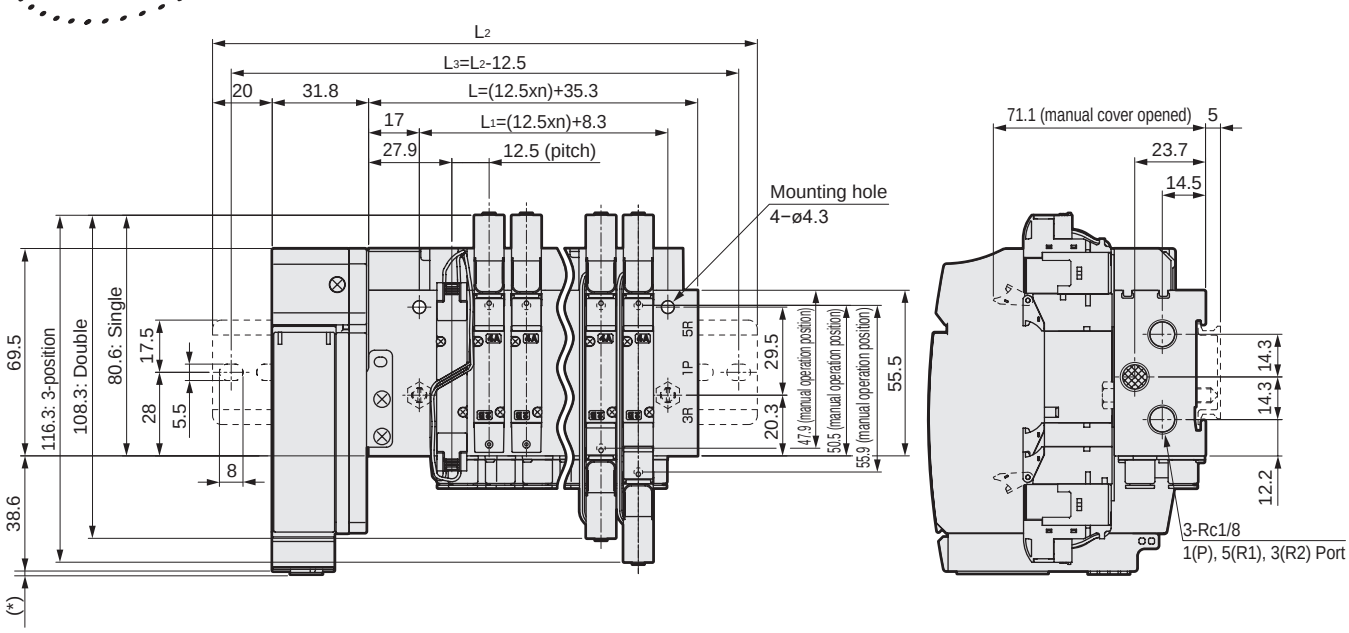

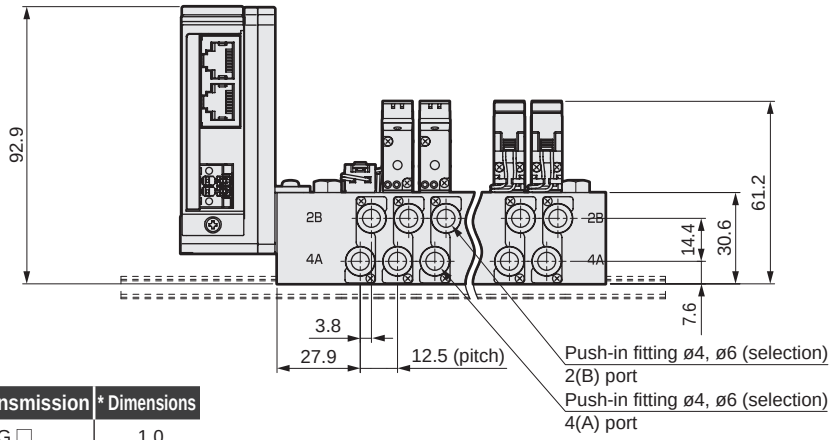

Serial transmission	* Dimensions
T8G □	1.0
T8P □	4.9
T8E □	1.5
T8D □	1.0

Stn No.	2	3	4	5	6	7	8	9	10	11	12	13	14	15	16	17	18	19	20
L	60.3	72.8	85.3	97.8	110.3	122.8	135.3	147.8	160.3	172.8	185.3	197.8	210.3	222.8	235.3	247.8	260.3	272.8	285.3
L1	33.3	45.8	58.3	70.8	83.3	95.8	108.3	120.8	133.3	145.8	158.3	170.8	183.3	195.8	208.3	220.8	233.3	245.8	258.3
L2	137.5	150.0	162.5	175.0	187.5	200.0	212.5	225.0	237.5	250.0	262.5	275.0	287.5	300.0	312.5				
L3	125.0	137.5	150.0	162.5	175.0	187.5	200.0	212.5	225.0	237.5	250.0	262.5	275.0	287.5	300.0				

Dimensions CAD

M4GE2

*1 Figure shows T10. Refer to pages 570 and 571 for detailed wiring block dimensions.
*2 The two 3-port valve integrated has the same dimensions as the double model.

● Reduced wiring left side (T10/T11/T30/T50/T51/T52/T53)

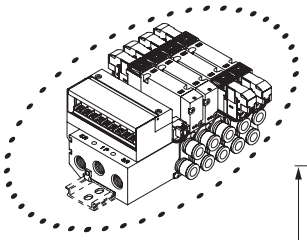

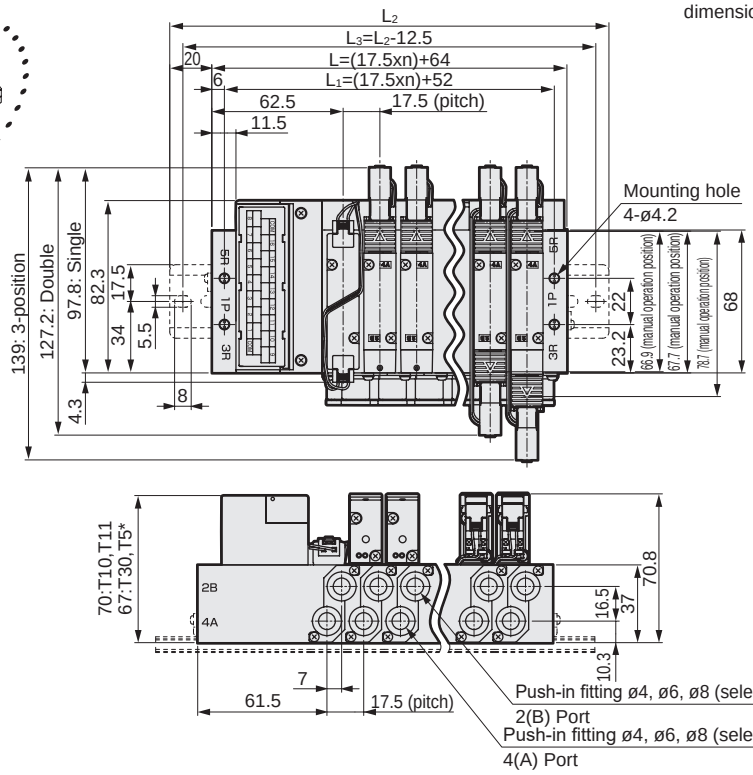

● Reduced wiring right side (T10R/T11R/T30R/T50R/T51R/T52R/T53R)

Note: Refer to page 572 for details on the push-in fitting elbow (upward) (downward).

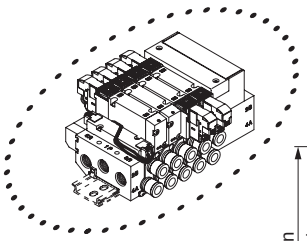

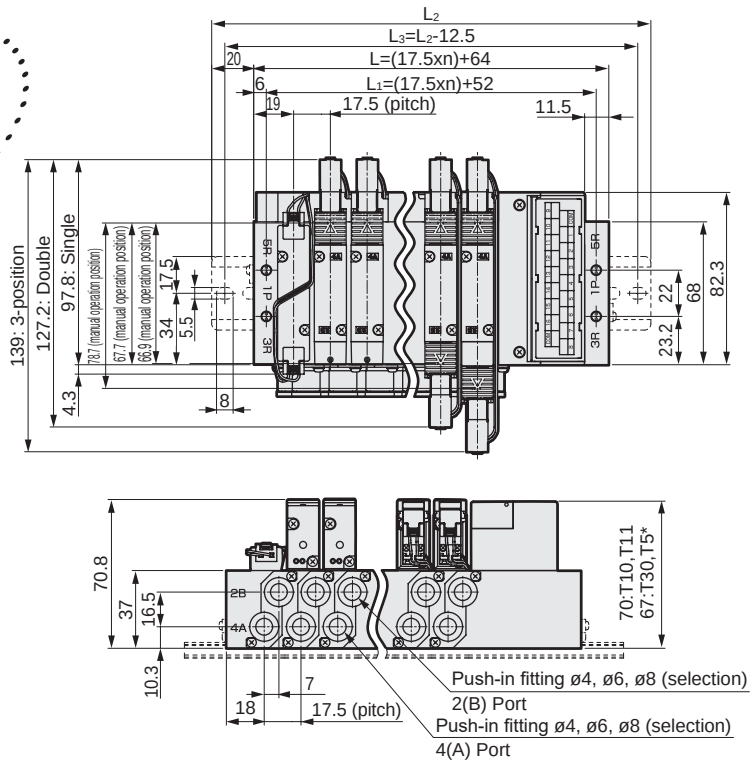

Stn No.	2	3	4	5	6	7	8	9	10	11	12	13	14	15	16	17	18	19	20
L	99.0	116.5	134.0	151.5	169.0	186.5	204.0	221.5	239.0	256.5	274.0	291.5	309.0	326.5	344.0	361.5	379.0	396.5	414.0
L_1	87.0	104.5	122.0	139.5	157.0	174.5	192.0	209.5	227.0	244.5	262.0	279.5	297.0	314.5	332.0	349.5	367.0	384.5	402.0
L_2	150.0	162.5	175.0	200.0	212.5	237.5	250.0	262.5	287.5	300.0	325.0	337.5	350.0	375.0	387.5				
L_3	137.5	150.0	162.5	187.5	200.0	225.0	237.0	250.0	275.0	287.5	312.5	325.0	337.5	362.5	375.0				

Dimensions CAD

M4GE2

● Serial transmission (T6G1)
DIN rail mounting (D)

* The two 3-port valve integrated has the same dimensions as the double.

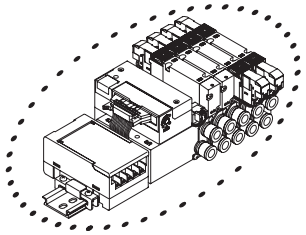

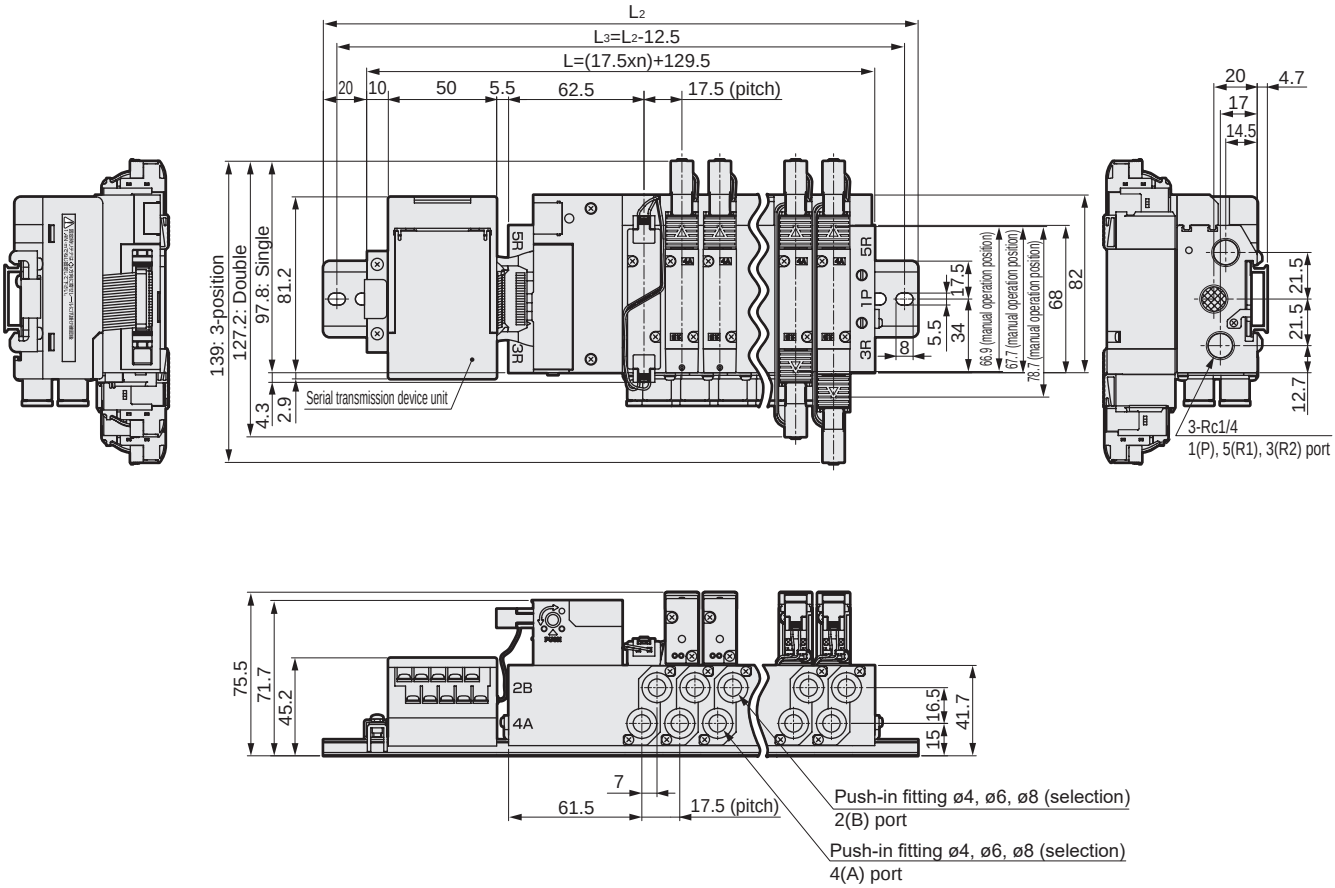

Stn No.	2	3	4	5	6	7	8	9	10	11	12	13	14	15	16
L	164.5	182.0	199.5	217.0	234.5	252.0	269.5	287.0	304.5	322.0	339.5	357.0	374.5	392.0	409.5
L_2	212.5	225.0	250.0	262.5	275.0	300.0	312.5	337.5	350.0	362.5	387.5	400.0	425.0	437.5	450.0
L_3	200.0	212.5	237.5	250.0	262.5	287.5	300.0	325.0	337.5	350.0	375.0	387.5	412.5	425.0	437.5

Dimensions CAD

M4GE2

● Serial transmission (T8)
DIN rail mounting (D)

* The two 3-port valve integrated has the same dimensions as the double.

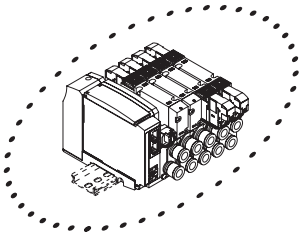

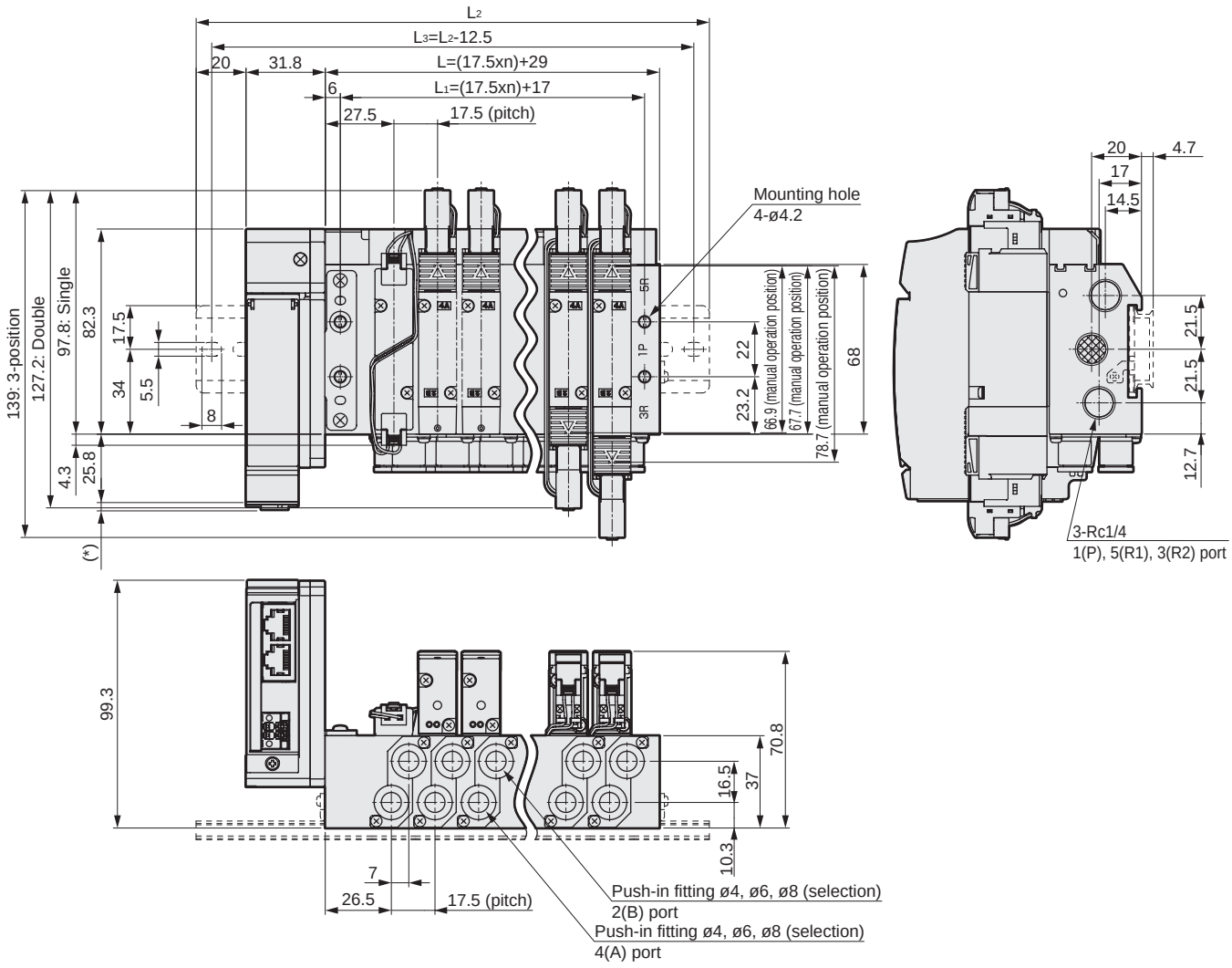

Serial transmission	* Dimensions
T8G □	1.0
T8P □	4.9
T8E □	1.5
T8D □	1.0

Stn No.	2	3	4	5	6	7	8	9	10	11	12	13	14	15	16	17	18	19	20
L	64.0	81.5	99.0	116.5	134.0	151.5	169.0	186.5	204.0	221.5	239.0	256.5	274.0	291.5	309.0	326.5	344.0	361.5	379.0
L_1	52.0	69.5	87.0	104.5	122.0	139.5	157.0	174.5	192.0	209.5	227.0	244.5	262.0	279.5	297.0	314.5	332.0	349.5	367.0
L_2	137.5	162.5	175.0	200.0	212.5	225.0	250.0	262.5	287.5	300.0	312.5	337.5	350.0	375.0	387.5				
L_3	125.0	150.0	162.5	187.5	200.0	212.5	237.5	250.0	275.0	287.5	300.0	325.0	337.5	362.5	375.0				

Dimensions CAD

M4GE3

● Reduced wiring left side (T10/T11/T30/T50/T51/T52/T53)

* Figure shows T10. Refer to pages 570 and 571 for detailed wiring block dimensions.

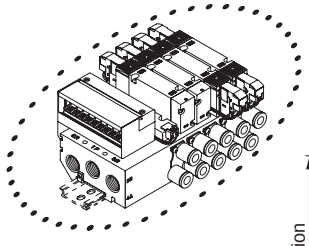

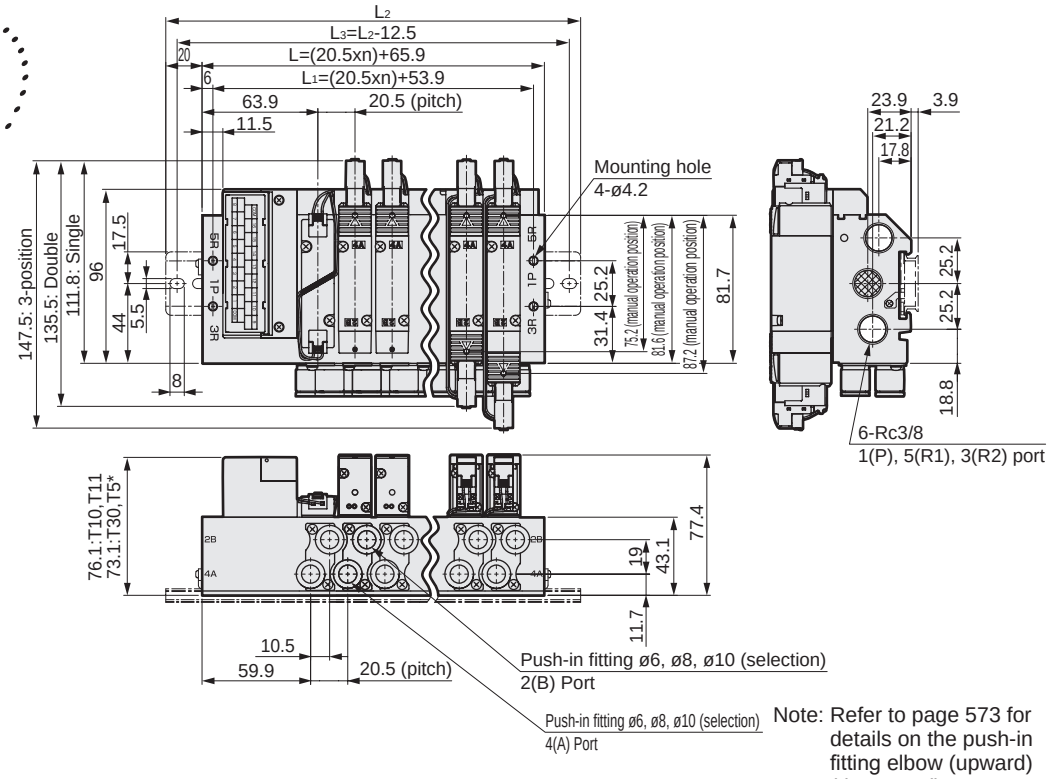

Note: Refer to page 573 for details on the push-in fitting elbow (upward) (downward).

● Reduced wiring right side (T10R/T11R/T30R/T50R/T51R/T52R/T53R)

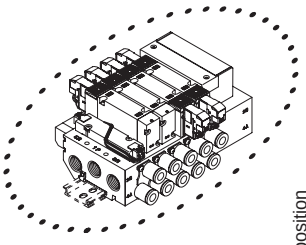

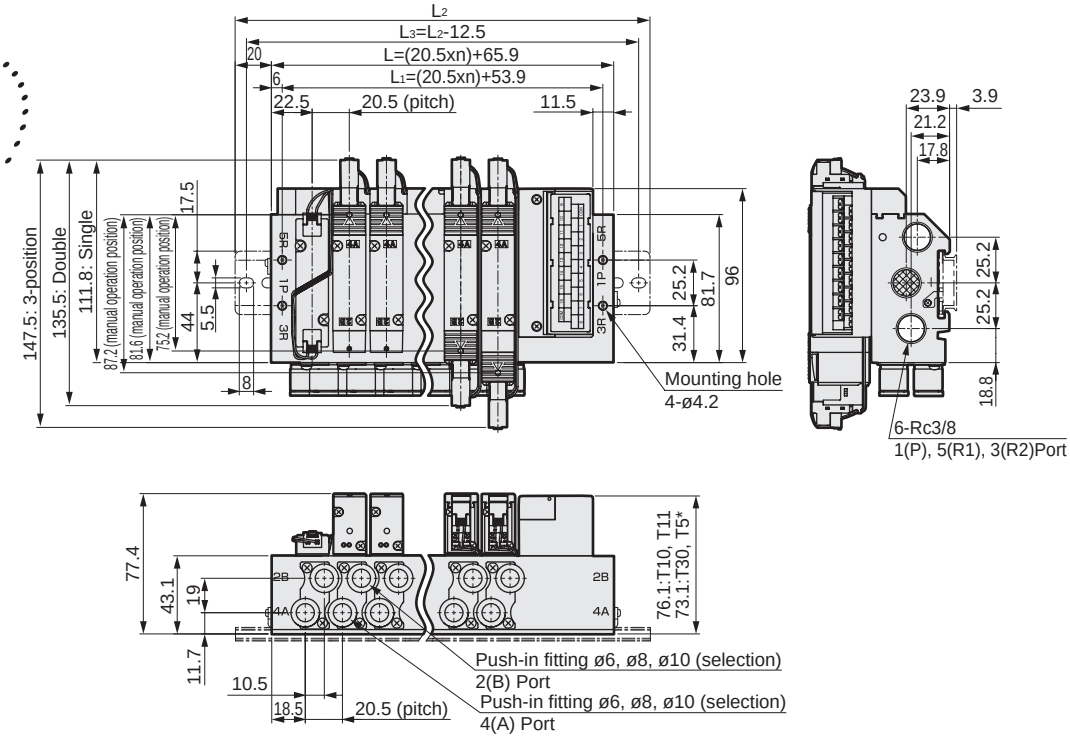

Stn No.	2	3	4	5	6	7	8	9	10	11	12	13	14	15	16
L	106.9	127.4	147.9	168.4	188.9	209.4	229.9	250.4	270.9	291.4	311.9	332.4	352.9	373.4	393.9
L_1	94.9	115.4	135.9	156.4	176.9	197.4	217.9	238.4	258.9	279.4	299.9	320.4	340.9	361.4	381.9
L_2	150.0	175.0	200.0	212.5	237.5	250.0	275.0	300.0	312.5	337.5	362.5	375.0	400.0	425.0	437.5
L_3	137.5	162.5	187.5	200.0	225.0	237.5	262.5	287.5	300.0	325.0	350.0	362.5	387.5	412.5	425.0

Dimensions

M4GE3

● Serial transmission (T6G1)
DIN rail mounting (D)

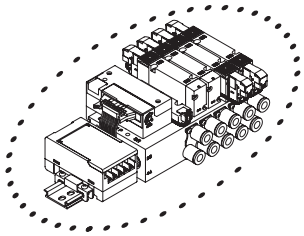

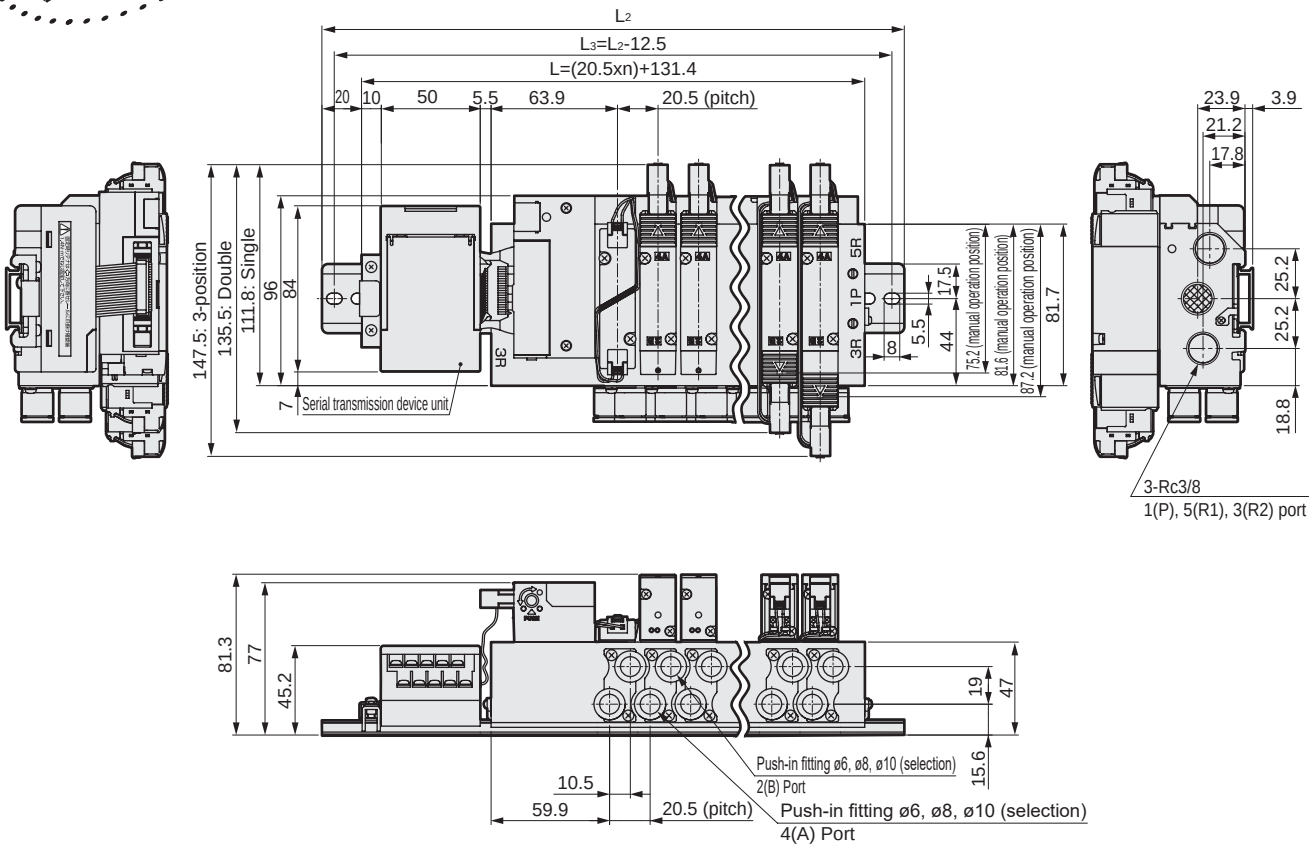

Stn No.	2	3	4	5	6	7	8	9	10	11	12	13	14	15	16
L	172.4	192.9	213.4	233.9	254.4	274.9	295.4	315.9	336.4	356.9	377.4	397.9	418.4	438.9	459.4
L_2	212.5	237.5	262.5	275.0	300.0	325.0	337.5	362.5	387.5	400.0	425.0	450.0	462.5	487.5	500.0
L_3	200.0	225.0	250.0	262.5	287.5	312.5	325.0	350.0	375.0	387.5	412.5	437.5	450.0	475.0	487.5

Dimensions CAD

M4GE3

● Serial transmission (T8)
DIN rail mounting (D)

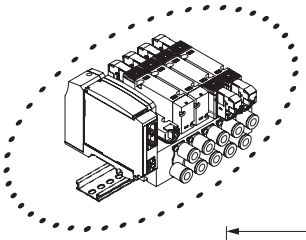

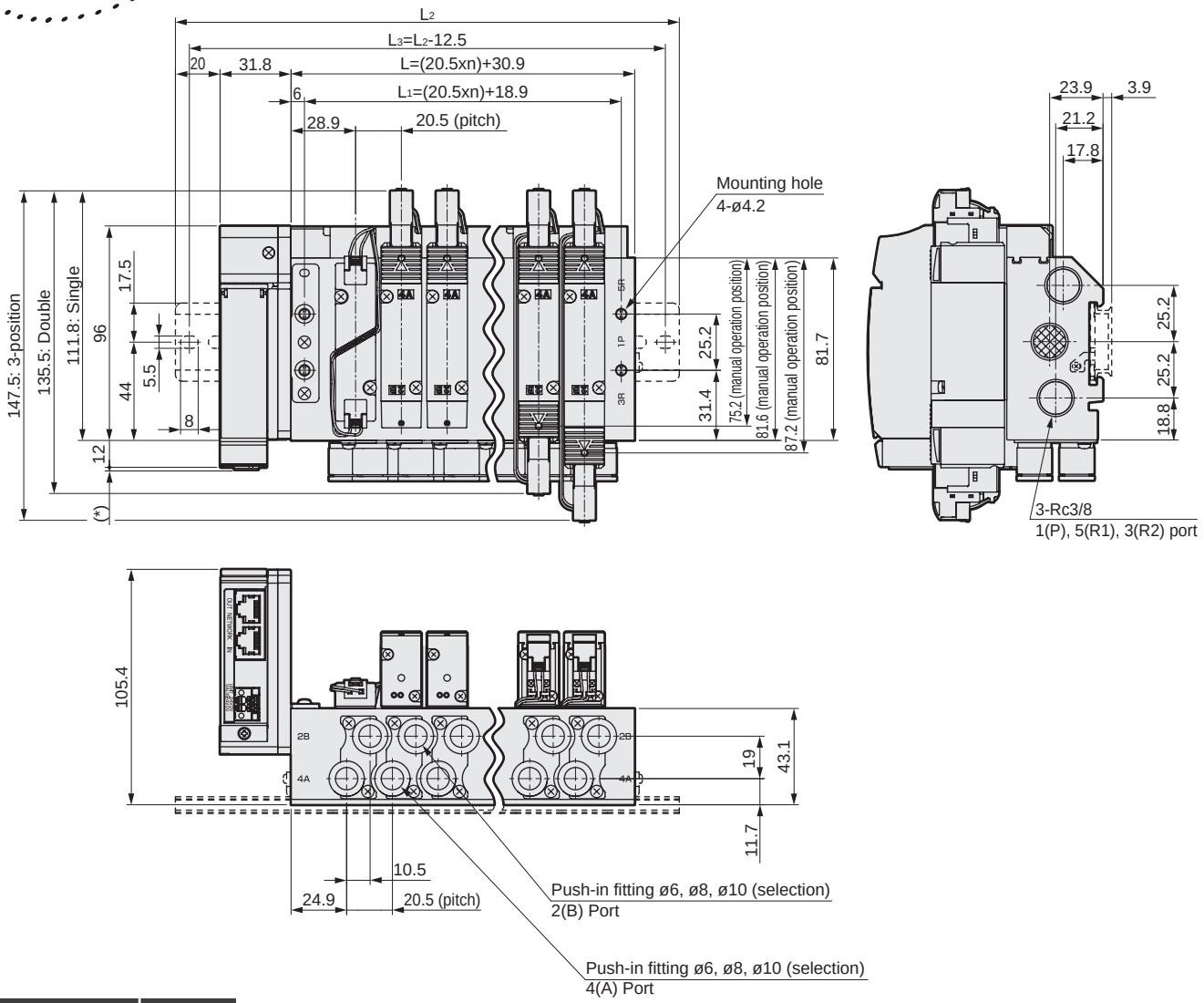

Serial transmission	* Dimensions
T8G □	1.0
T8P □	4.9
T8E □	1.5
T8D □	1.0

Stn No.	2	3	4	5	6	7	8	9	10	11	12	13	14	15	16
L	71.9	92.4	112.9	133.4	153.9	174.4	194.9	215.4	235.9	256.4	276.9	297.4	317.9	338.4	358.9
L_1	59.9	80.4	100.9	121.4	141.9	162.4	182.9	203.4	223.9	244.4	264.9	285.4	305.9	326.4	346.9
L_2	150.0	175.0	187.5	212.5	237.5	250.0	275.0	287.5	312.5	337.5	350.0	375.0	400.0	412.5	437.5
L_3	137.5	162.5	175.0	200.0	225.0	237.5	262.5	275.0	300.0	325.0	337.5	362.5	387.5	400.0	425.0

MEMO

Reduced wiring part: Dimensions

● Common terminal block (M3 thread)
T10

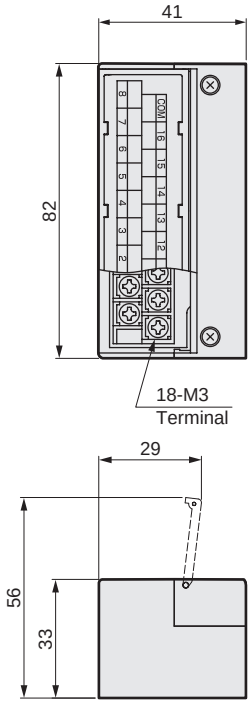

● Common terminal block (clamping)
T11

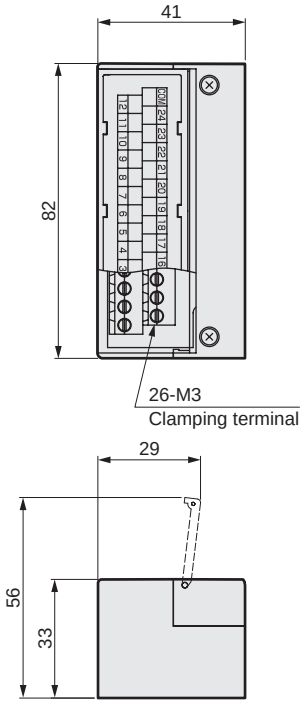

● D sub-connector
T30

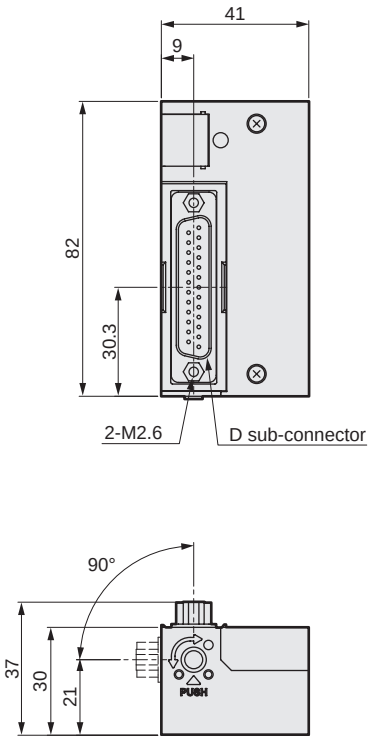

● 20-pin flat cable connector (with power supply terminal)
T50

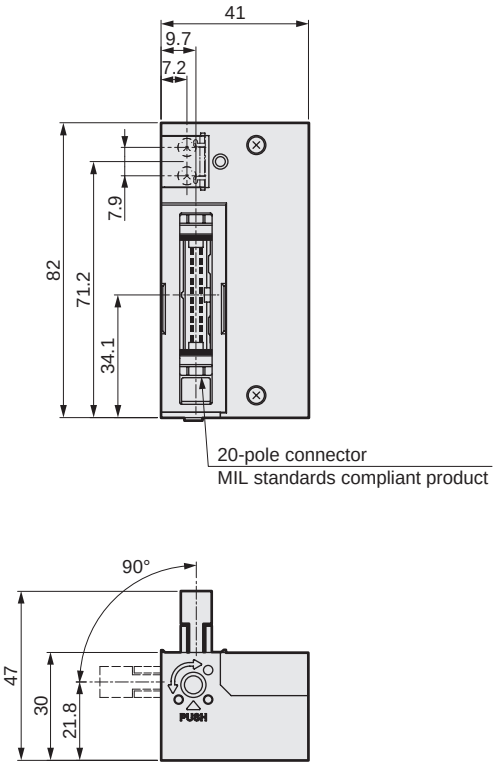

Reduced wiring part: Dimensions

● 20-pin flat cable connector (without power supply terminal)
T51

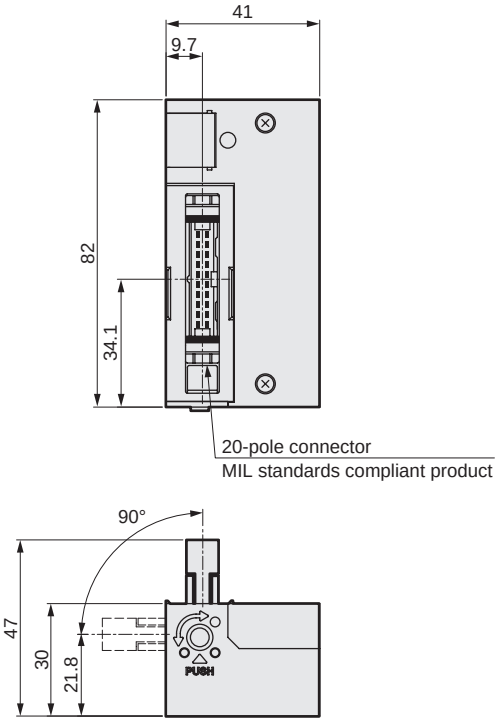

● 10-pin flat cable connector (without power supply terminal)
T52

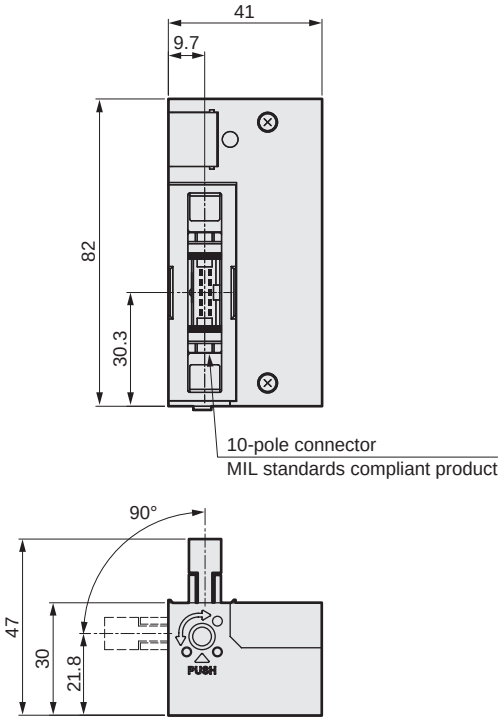

● 26-pin flat cable connector (without power supply terminal)
T53

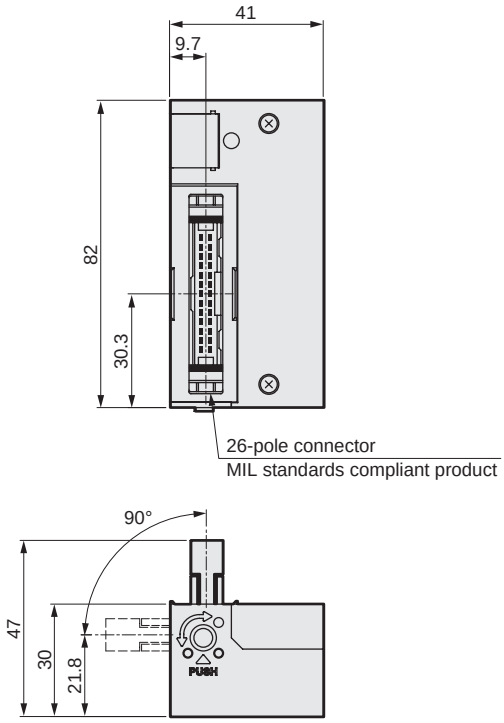

Dimensions

M4GE1

Fitting straight

● ø4(C4)

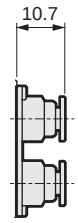

● ø6(C6)

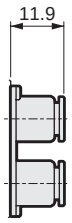

L Fitting (upward)

● ø4(CL4)

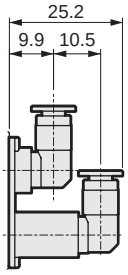

● ø6(CL6)

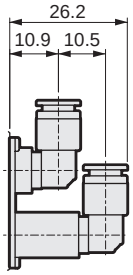

L Fitting (downward)

● ø4(CD4)

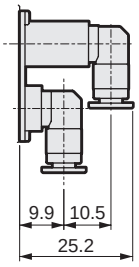

● ø6(CD6)

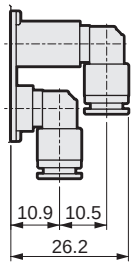

M4GE2

Fitting straight

● ø4(C4)

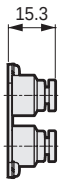

● ø6(C6)

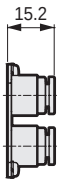

● ø8(C8)

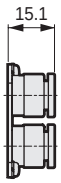

L Fitting (upward)

● ø6(CL6)

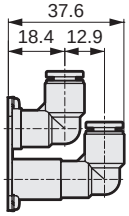

● ø8(CL8)

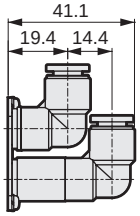

L Fitting (downward)

● ø6(CD6)

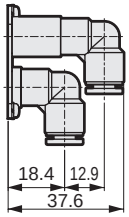

● ø8(CD8)

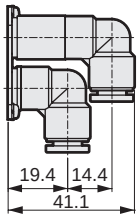

Dimensions

M4GE3

Fitting straight

● ø6(C6) ● ø8(C8) ● ø10(C10)

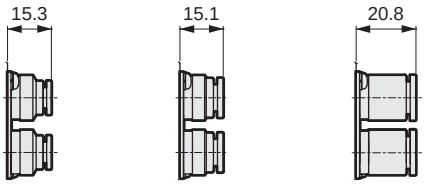

L Fitting (upward)

● ø8(CL8) ● ø10(CL10)

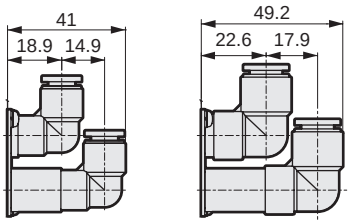

L Fitting (downward)

● ø8(CD8) ● ø10(CD10)

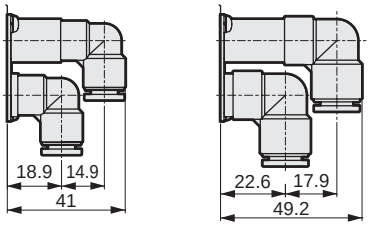

● Single unit serial transmission device (adapter) station (connector connection)

4GR – OPP3 – 1G

Ⓐ Wiring method

Code	Description			
Ⓐ Wiring method				
1G	T6G1	CC-Link	NPN	16 points

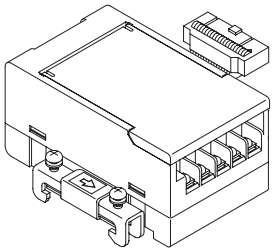

● Single unit serial transmission device (adapter) station (slim slot)

4GR – OPP7 – 2G

Ⓐ Wiring method

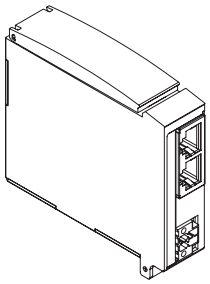

Code	Description			
Ⓐ Wiring method				
1G	T8G1	CC-Link	NPN	16 points
2G	T8G2			32 points
1G-P	T8GP1		PNP	16 points
2G-P	T8GP2			32 points
1P	T8P1	PROFIBUS-DP	NPN	16 points
2P	T8P2			32 points
1P-P	T8PP1		PNP	16 points
2P-P	T8PP2			32 points
1EC	T8EC1	EtherCAT	NPN	16 points
2EC	T8EC2			32 points
1EC-P	T8ECP1		PNP	16 points
2EC-P	T8ECP2			32 points
1EN	T8EN1	EtherNet/IP	NPN	16 points
2EN	T8EN2			32 points
1EN-P	T8ENP1		PNP	16 points
2EN-P	T8ENP2			32 points
1D	T8D1	DeviceNet	NPN	16 points
2D	T8D2			32 points
1D-P	T8DP1		PNP	16 points
2D-P	T8DP2			32 points
1EB	T8EB1	CC-Link IEF Basic	NPN	16 points
2EB	T8EB2			32 points
1EB-P	T8EBP1		PNP	16 points
2EB-P	T8EBP2			32 points
1EP	T8EP1	PROFINET	NPN	16 points
2EP	T8EP2			32 points
1EP-P	T8EPP1		PNP	16 points
2EP-P	T8EPP2			32 points

MEMO

Related products

● In-stop valve spacer

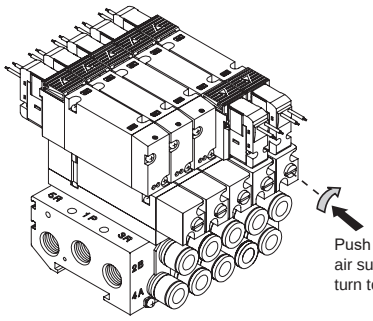

Specifications

Model No.	P→A/B		A/B→R		Weight g
	C[dm³/(s·bar)]	b	C[dm³/(s·bar)]	b	
4G1	0.54	0.03	0.82	0.27	17
4G2	1.5	0.17	1.6	0.20	63
4G3	1.9	0.09	2.8	0.16	80

*1: Values with base piping and 2-position valve mounted.
*2: The effective cross-sectional area when discharging residual pressure is 1.0 mm² (reference value).
*3: Effective cross-sectional area S and sonic conductance C are converted as S ≈ 5.0 x C.
Attachments: PR check valve 2, body gasket 1

How to order discrete units

4G1R - IS

4G2R - IS

4G3R - IS

In-stop valve spacer

JIS symbol

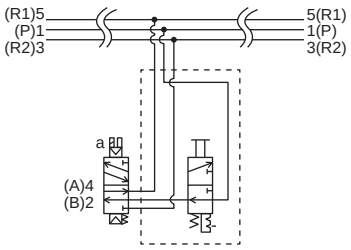

Precautions for model No. selection

*1: Specify the spacer mounting position and quantity in manifold specifications sheet.
*2: When retrofitting to the reduced wiring manifold, the existing electric wire may be too short. Contact CKD for details.

Dimensions

● 4G1

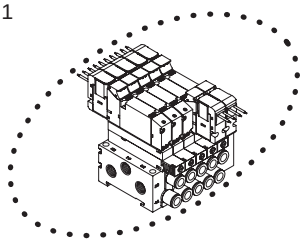

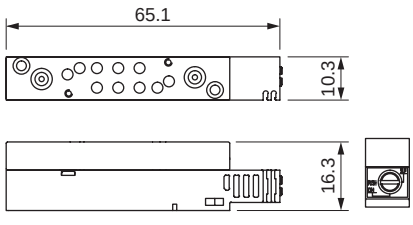

Dimensions when mounted

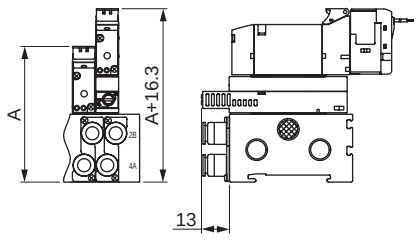

● 4G2

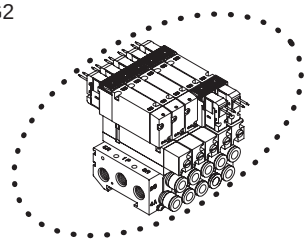

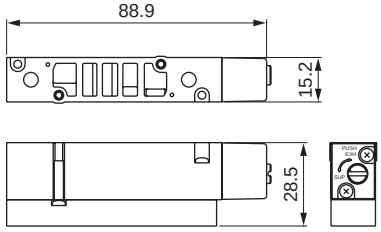

Dimensions when mounted

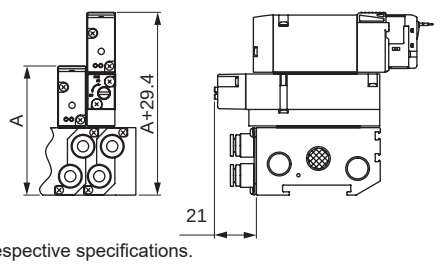

● 4G3

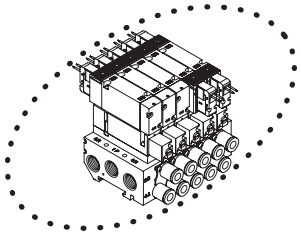

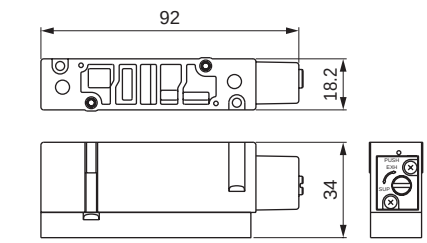

Dimensions when mounted

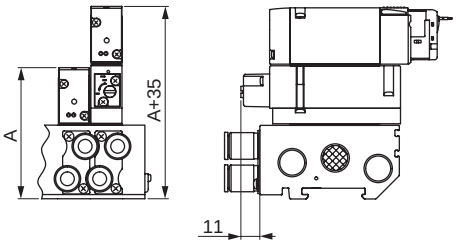

Note: For A dimensions, check the dimensions of respective specifications.

Related products

● Air supply spacer

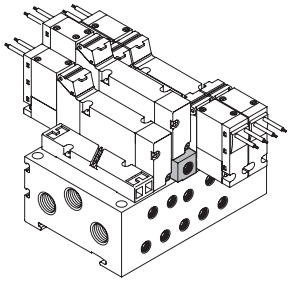

Specifications

Model No.	P→A/B		A/B→R		Weight g
	C[dm³/(s·bar)]	b	C[dm³/(s·bar)]	b	
4G1	0.70	0.23	0.93	0.16	8
4G2	1.6	0.17	1.8	0.16	35
4G3	2.6	0.22	3.1	0.14	56

*1: Values are when a valve is mounted.
*2: Effective cross-sectional area S and sonic conductance C are converted as S ≈ 5.0 x C.

How to order discrete units

● Air supply spacer

Air supply spacer model No.

4G 3 R - P - GWS10

Ⓐ Air supply spacer model No.

Ⓑ Port size

Code	Description	Valve model No. 4GD1	4GE1	4GD2	4GE2	4GD3	4GE3
Ⓐ Air supply spacer model No.							
1	For 4G1	●					
2	For 4G2			●			
3	For 4G3					●	
Ⓑ Port size							
Blank	M5 (4G1), Rc1/8 (4G2), Rc1/4 (4G3)	●		●		●	
GWS4	ø4 Push-in fitting	●					
GWS6	ø6 Push-in fitting	●		●			
GWS8	ø8 Push-in fitting			●		●	
GWS10	ø10 Push-in fitting					●	

is not available.

Attachments: Mounting screw 2, PR check valve 2, body gasket 1

⚠ Precautions for model No. selection

*1: Specify the air supply spacer mounting position and quantity in manifold specifications sheet of each catalog.
*2: If the A/B port fitting is the elbow (upward), turn the air supply port of the air supply spacer toward the reverse side (“a” solenoid side).
*3: If the elbow (upward) A/B port fitting is used for the reduced wiring manifold, the air supply spacer cannot be selected.
*4: Combination with the masking plate is not supported.

Related products

● Air supply spacer

Dimensions

● 4G1

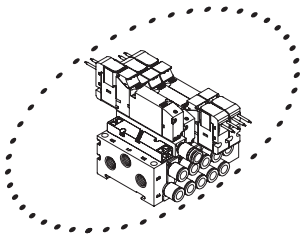

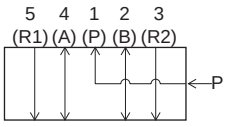

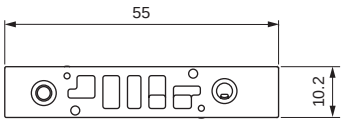

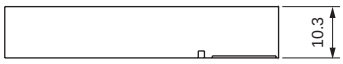

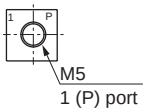

● 4G2

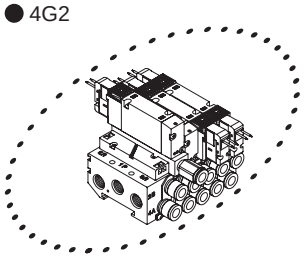

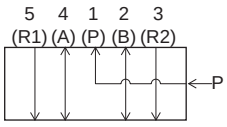

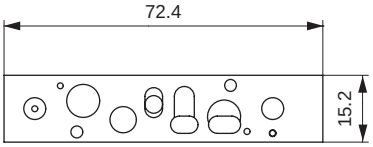

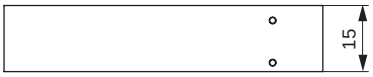

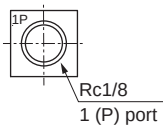

Dimensions when mounted

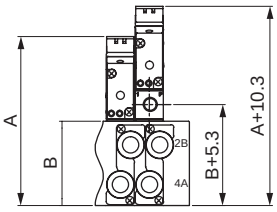

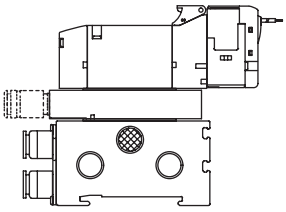

Dimensions when mounted

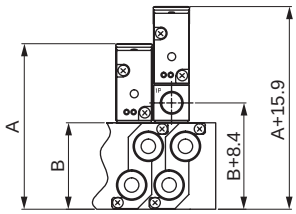

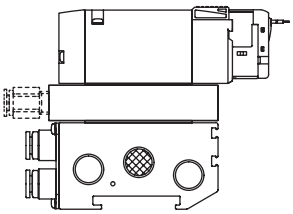

● 4G3

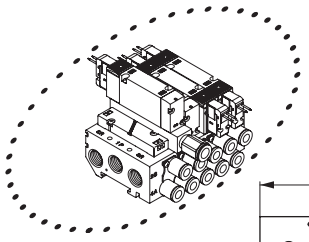

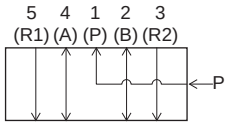

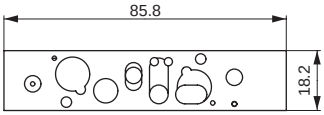



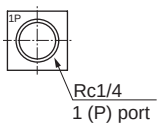

Dimensions when mounted

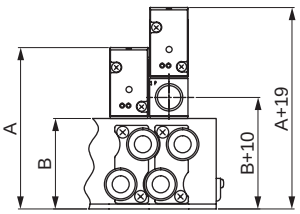

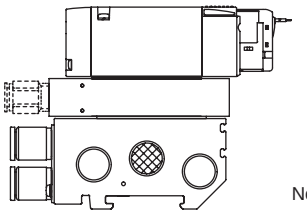

Note: For A and B dimensions, check the dimensions of respective specifications.

Related products

● Exhaust spacer

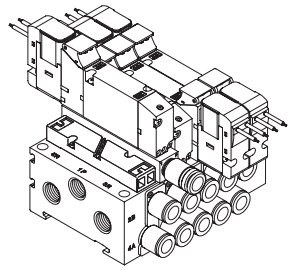

Specifications

Model No.	P → A/B		A/B→R		Weight g
	C(dm³/(s·bar))	b	C(dm³/(s·bar))	b	
4G1	0.94	0.28	0.68	0.33	7
4G2	1.5	0.24	1.9	0.24	34
4G3	3.4	0.21	2.9	0.27	58

*1: Values are when a valve is mounted.
*2: Effective cross-sectional area S and sonic conductance C are converted as S ≈ 5.0 x C.

How to order discrete units

● Exhaust spacer

Exhaust spacer model No.

4G (3) R - R - (GWS10)

Ⓐ Exhaust spacer model No.

Ⓑ Port size

Code	Description	Valve model No. 4GD1	4GE1	4GD2	4GE2	4GD3	4GE3
Ⓐ Exhaust spacer model No.							
1	For 4G1	●					
2	For 4G2			●			
3	For 4G3					●	
Ⓑ Port size							
Blank	M5(4G1), Rc1/8(4G2), Rc1/4(4G3)	●		●		●	
GWS4	ø4 push-in fitting	●					
GWS6	ø6 push-in fitting	●		●			
GWS8	ø8 push-in fitting			●		●	
GWS10	ø10 push-in fitting					●	

is not available.

Accessories: Mounting screw 2, PR check valve 2, body gasket 1

⚠ Precautions for model No. selection

*1: Specify the exhaust spacer mounting position and quantity on the manifold specifications sheet of each catalog.
*2: If the port A/B fitting is elbow (upward), turn the exhaust port of the exhaust spacer toward the reverse side ("a" solenoid side).
*3: If the elbow (upward) port A/B fitting is used for the reduced wiring manifold, the exhaust spacer cannot be selected.
*4: Combination with the masking plate is not supported.

Related products

● Exhaust spacer

Dimensions

● 4G1

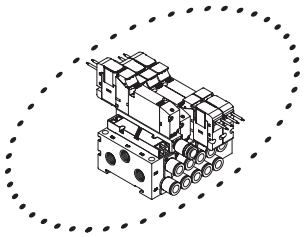

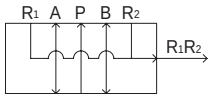

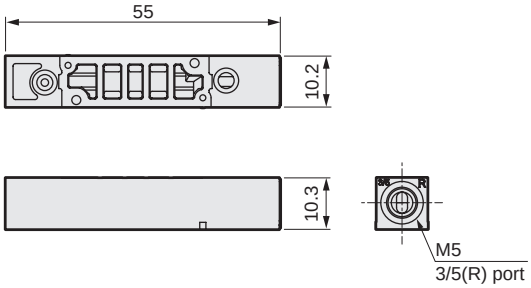

● 4G2

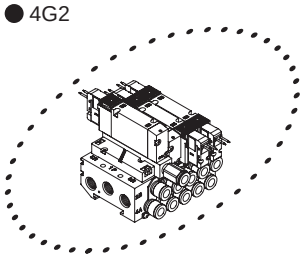

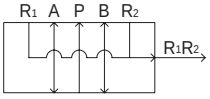

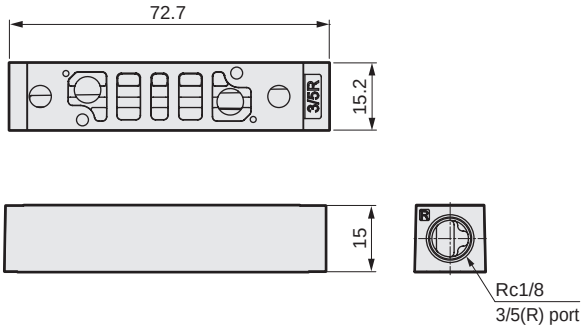

Dimensions when mounted

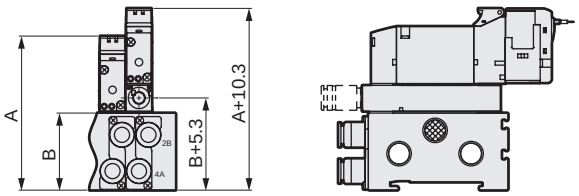

Dimensions when mounted

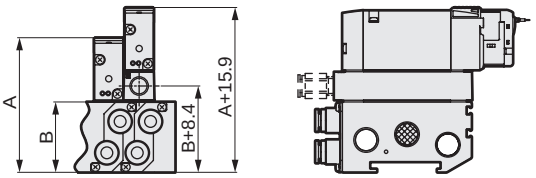

● 4G3

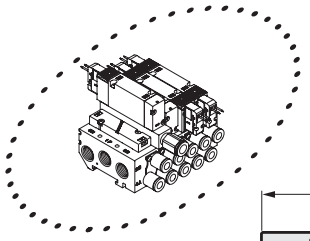

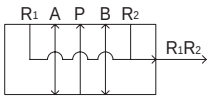

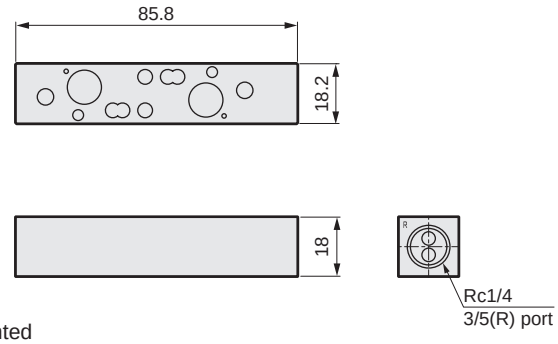

Dimensions when mounted

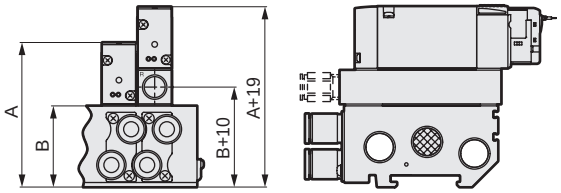

Note: For A and B dimensions, check the dimensions of respective specifications.

Related products

● Pilot check valve

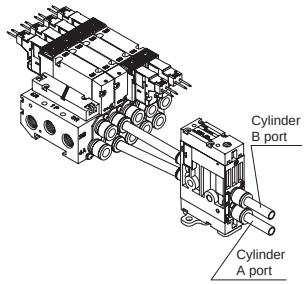

How to order

● Discrete model No.

4G2R − PCS − C4 − ○

● Manifold model No.

M4G2R − PCS − C4 − ○ − 5

Model No. / Pilot check valve / Ⓐ Port size (*1) / Ⓑ Option (*2) / Ⓒ Station No.

Specifications

Item	4G2R-PCS-*-*
Effective cross-sectional area mm²	11
Weight g	200

Code	Description	
Ⓐ Port size		
	Valve side port	Cylinder side port
C4	ø4 push-in fitting	ø4 push-in fitting
C6	ø6 push-in fitting	ø6 push-in fitting
C8	ø8 push-in fitting	ø8 push-in fitting
CL6	ø6 push-in fitting	ø6 push-in L-fitting (upward)
CL8	ø8 push-in fitting	ø8 push-in L-fitting (upward)
Ⓑ Option		
Blank	None	
F	A/B-port filter built in	
M	Manual non-locking	
D	DIN rail mount	
Ⓒ Station No.		
2	2 stations	
to	to	
10	10 stations	

JIS symbol

(Position locking)

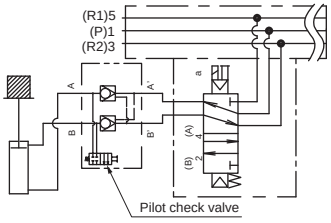

(Stopping)

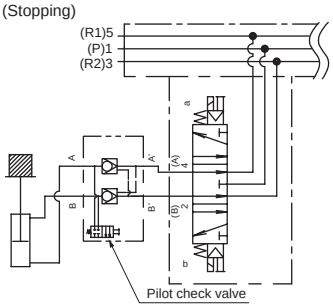

Example of leak comparison
All ports closed (solenoid) valve
10 cm³/min or less
Pilot check valve (4G2R-PCS)
0 to 0.3 cm³/min

⚠ Depending on usage conditions, the pilot check valve body may emit resonance noise due to the air flow when the cylinder operates, but this is not an abnormality. Adjust the pipe length and bore size in that case.

⚠ Precautions for model No. selection

*1: Contact CKD for information on mixing port sizes.
*2: The following applies when blank is selected as an option.
Manual override: Non-locking/locking common,
Mounting method: Direct mounting.

Dimensions

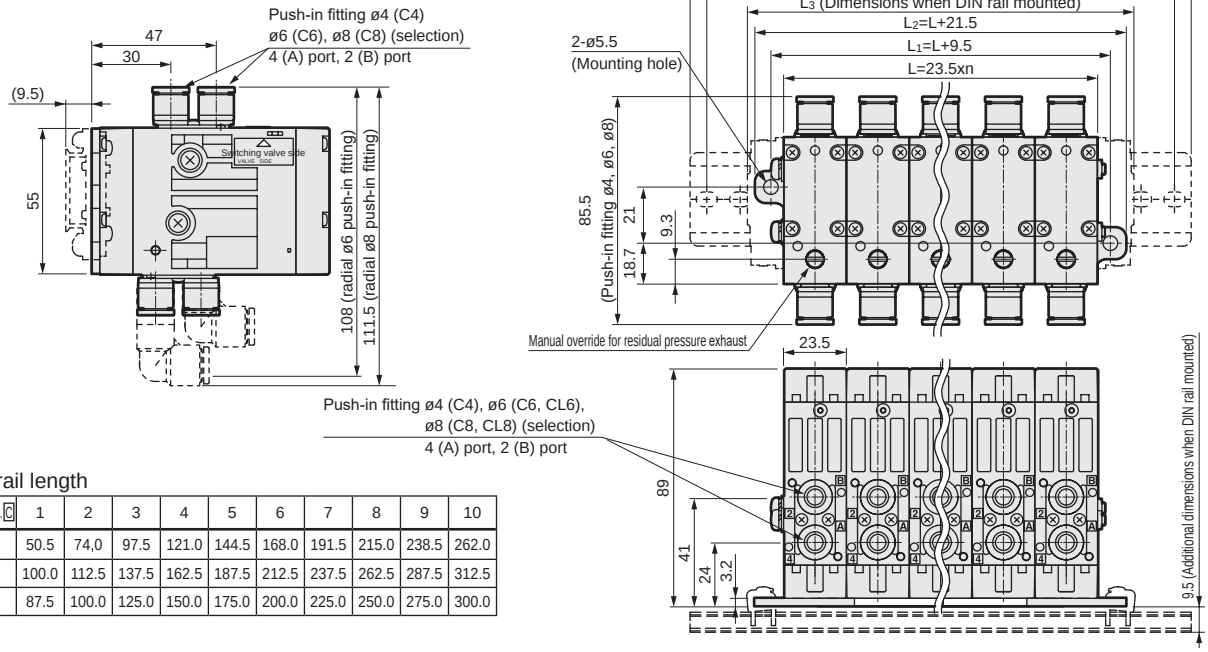

DIN rail length

Station No. Ⓒ	1	2	3	4	5	6	7	8	9	10
L3	50.5	74,0	97.5	121.0	144.5	168.0	191.5	215.0	238.5	262.0
L4	100.0	112.5	137.5	162.5	187.5	212.5	237.5	262.5	287.5	312.5
L5	87.5	100.0	125.0	150.0	175.0	200.0	225.0	250.0	275.0	300.0

Related products

● Tie rod kit (for pilot check valve)
(For manifold connection and expansion)

4G2R − PCS − TR − V1

Ⓐ Type (*1)

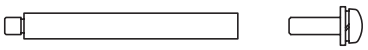

Ⓐ Type	
V1	For 1 station
V2	For 2 stations
V3	For 3 stations
V4	For 4 stations
V5	For 5 stations

⚠ Precautions for model No. selection

*1: Select the V1 to V5 combination when using six or more stations.

● DIN rail adaptor kit (for pilot check valve)
(The DIN rail adaptor kit is required for the following reassembly)

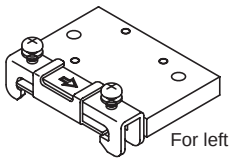
For left

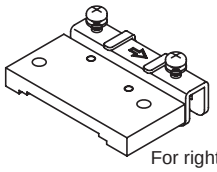
For right

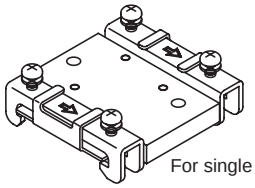
For single unit

4G2R − PCS − D1

Ⓐ Type

Ⓐ Type	DIN rail adaptor kit selection list based on changes in specifications				
Description / Code	Change from mounting plate to DIN rail		Add/remove stations with DIN rail mount		Content
	For 1 station	2 or more stations	≥2 stations → 1 station	1 station → ≥2 stations	
D1 For right				● (*2)	DIN rail adaptor (right) 1, thread 2
D2 Right + left		●			DIN rail adaptor (right) 1, DIN rail adaptor (left) 1, thread 4
D3 For single unit	●		●		DIN rail adaptor (single unit) 1, thread 2

*2: When changing from 1 station to 2 or more stations, purchase the DIN rail adaptor for right (D1), and remove the retainer on one side of the current DIN rail adaptor kit (D3).

● Push-in cartridge fitting

ø4L/ø6L/ø8L/ø10L type (short elbow)
4G1R-JOINT-CL4/CL6
4G2R-JOINT-CL6/CL8
4G3R-JOINT-CL8/CL10

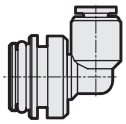

ø4L/ø6L/ø8L/ø10L (long elbow)
4G1R-JOINT-CLL4/CLL6
4G2R-JOINT-CLL6/CLL8
4G3R-JOINT-CLL8/CLL10

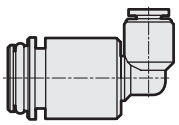

Related products

● Silencer

● SLM-M5

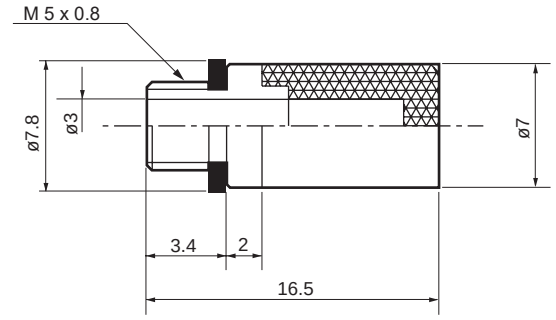

● SLW-6S, 8S

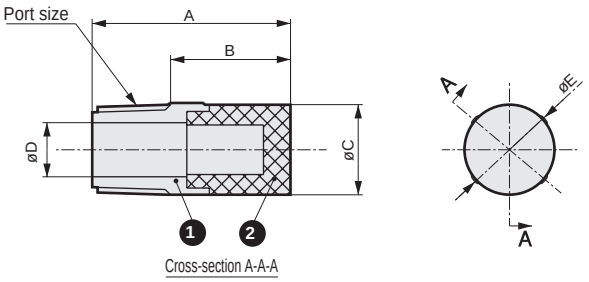

Model No.	Port size	A	B	C	D	E
SLW-6S	R 1/8	22	13.3	10.5	6	10.5
SLW-8S	R 1/4	28	19	14.8	9	15.4

● SLW-6A, 8A, 10A, 10L

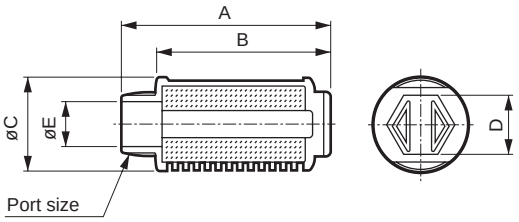

*1: Select the silencer mounting after confirming the dimensions.
* SLW-8S for the 2:M4GD2 DIN rail mount. Interference occurs if SLW-8A is used.

Code / Model No.	Noise reduction effect dB (A)	Eff. X-sectional area mm²	A	B	C	D	E	Port size
SLW-6A	30 or more	10	34.5	28	16.5	10	7	R1/8
SLW-8A	30 or more	20	44.5	36	20	13	8.5	R1/4
SLW-10A	30 or more	30	58.5	48.5	25.5	17	12	R3/8
SLW-10L	30 or more	60	68.2	58.4	28	19	12	R3/8

● Blanking plug

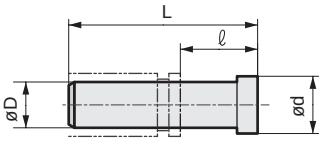

Model No.	D	L	ℓ	d
GWP 4-B	ø4	27	16	6
GWP 6-B	ø6	29	11.5	8
GWP 8-B	ø8	33	14	10
GWP 10-B	ø10	40	18.5	12

PG-P2-B (for ø1.8)

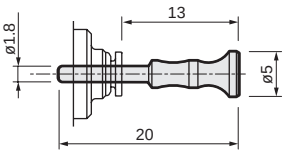

● Plug type

Part name	Model No.	Compatible bore size	Appearance
Threaded plug	4G1R-M5P	M5	(FPL-M5)
	4G2R-06P	Rc1/8	Hexagon socket plug
	4G3R-08P	Rc1/4	
	4G3R-10P	Rc3/8	

● Push-in fitting tube remover
For ø1.8/ø4 push-in fitting
4GR-EOT18-4

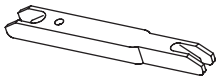

For ø4/ø6 push-in fittings
4GR-EOT4-6

● DIN rail

N4GR－BAA **L2**
Rail length

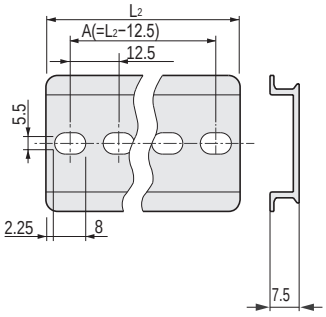

*1:Rail lengths not included in the list are made to order products.

L1: Manifold length		L2: Rail length	A: Mounting pitch
35 47.5 or less		87.5	75
Over 47.5 to 60		100	87.5
60	72.5	112.5	100
72.5	85	125	112.5
85	97.5	137.5	125
97.5	110	150	137.5
110	122.5	162.5	150
122.5	135	175	162.5
135	147.5	187.5	175
147.5	160	200	187.5
160	172.5	212.5	200
172.5	185	225	212.5
185	197.5	237.5	225
197.5	210	250	237.5
210	222.5	262.5	250
222.5	235	275	262.5
235	247.5	287.5	275
247.5	260	300	287.5
260	272.5	312.5	300
272.5	285	325	312.5
285	297.5	337.5	325
297.5	310	350	337.5
310	322.5	362.5	350
322.5	335	375	362.5
335	347.5	387.5	375
347.5	360	400	387.5
360	372.5	412.5	400
372.5	385	425	412.5
385	397.5	437.5	425
397.5	410	450	437.5
410	422.5	462.5	450
422.5	435	475	462.5
435	447.5	487.5	475
447.5	460	500	487.5
460	472.5	512.5	500
472.5	485	525	512.5
485	497.5	537.5	525
497.5	510	550	537.5

If the length exceeds 510, calculate using a multiple of 12.5.

Related parts

(1) Mounting plate (P) kit

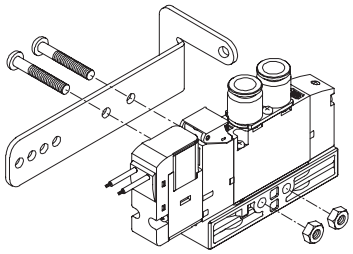

Mounting (P) kit

Model	Kit model No.	Set parts
3GD1/4GD1	4G1R-MOUNT-PLATE-KIT	Mounting plate, set screw 2, nut 2
3GD2/4GD2	4G2R-MOUNT-PLATE-KIT	Mounting plate, set screw 2
3GD3/4GD3	4G3R-MOUNT-PLATE-KIT	Mounting plate, set screw 2

(2) Single cartridge push-in fitting related part

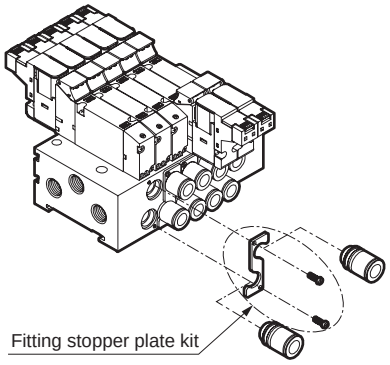

Fitting stopper plate kit

Model	Kit model No.
M4G1	4G1R-JNT-STP-PLATE-KIT
M4G2	4G2R-JNT-STP-PLATE-KIT
M4G3	4G3R-JNT-STP-PLATE-KIT

Related parts

(4) Manifold related parts

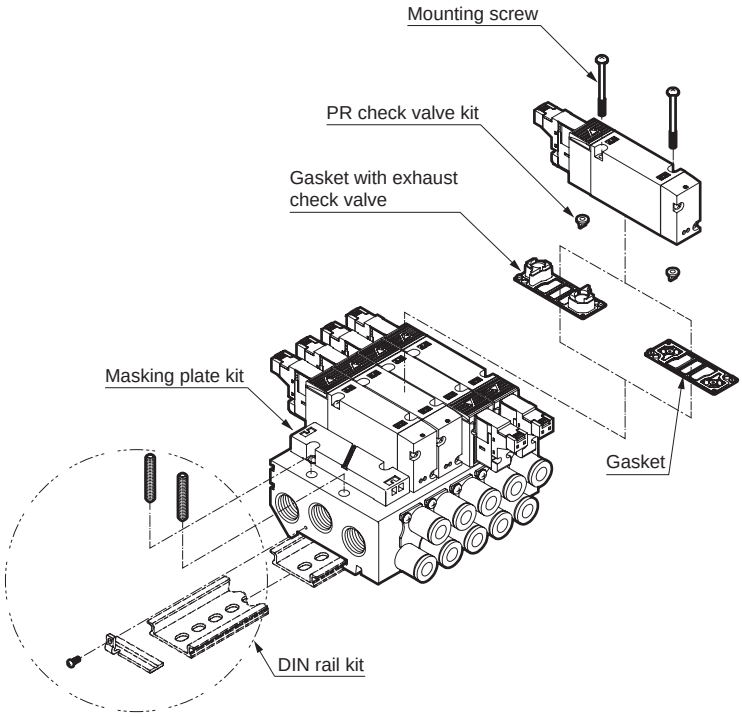

Masking plate kit

Model	Model No.	Content	Remarks
M3G1/M4G1	4G1R-MP	Masking plate Gasket Mounting screws 2	4G3R-MP has two PR check valves included.
M3G1/M4G1	4G1R-MPC (*)		
M3G2/M4G2	4G2R-MP		
M3G3/M4G3	4G3R-MP		

* For pilot exhaust atmosphere release

Gasket

Model	Part model No.
3G1/4G1	4G1R-GASKET
3G1/4G1 (For masking plate)	4G1R-MP-GASKET
3G2/4G2	4G2R-GASKET
3G2/4G2 (For masking plate)	4G2R-MP-GASKET
3G3/4G3	4G3R-GASKET

Gasket with exhaust check valve

Model	Part model No.
3G1/4G1	4G1R-CHECK-VALVE
3G2/4G2	4G2R-CHECK-VALVE
3G3/4G3	4G3R-CHECK-VALVE

PR check valve kit (2 per set)

Model	Kit model No.
3G1/4G1	4G1R-PR
3G2/4G2	4G2R-PR
3G3/4G3	4G3R-PR

Mounting screw (10 per set)

Model	Part model No.
3G1/4G1	4G1R-SET-SCREW
3G2/4G2	4G2R-SET-SCREW
3G3/4G3	4G3R-SET-SCREW

DIN rail kit

Model	Model No.	Content
M4G1	4GA1R-BAA[length]- D	DIN rail, mounting screw 2 Lock nut 2
	4GB1R-BAA[length]- D	
M4G2	4GA2R-BAA[length]- D	DIN rail/holder 2 Tapping screw 2, mounting screw 4
	4GB2R-BAA[length]- D	
M4G3	4GA3R-BAA[length]- D	
	4GB3R-BAA[length]- D	

Specify the length "0" when the DIN rail is not required.

Set the DIN rail length, referring to the working manifold dimensions and DIN rail length quick reference list (page 583).

Related parts

(5) Sub-plate

How to order

● 4GD piping adapter

4G1 R-ADAPTOR-M5-○○

Ⓐ Model No.
Ⓑ Port size
Ⓒ Option
Ⓓ Pilot exhaust method

Code	Description	Ⓐ Model No. 4G1	4G2	4G3
Ⓑ Port size (P/R1/R2 port)				
M5	M5	●		
06	Rc1/8		●	
08	Rc1/4			●
Ⓒ Option				
P	With mounting plate (attachment)	●	●	●
Ⓓ Pilot exhaust method				
Blank	Common exhaust (Pilot exhaust check valve built-in)	●	●	●
C	Atmosphere release	○	○	○

is not available.
○ indicates a custom order.

● 4GE single sub-plate

4G1 R-SUB-BASE-06-○○

Ⓐ Model No.
Ⓑ Port size
Ⓒ Option
Ⓓ Pilot exhaust method

Code	Description	Ⓐ Model No. 4G1	4G2	4G3
Ⓑ Port size (A/B/P/RI/R2-port)				
06	Rc1/8	●		
08	Rc1/4		●	●
10	Rc3/8			●
Ⓒ Option				
F	A/B port filter integrated *1	●	●	●
Ⓓ Pilot exhaust method				
Blank	Common exhaust (Pilot exhaust check valve built-in)	●	●	●
C	Atmosphere release	○	○	○

*1: A filter is built into the P-port as standard.

is not available.
○ indicates a custom order.

Related parts

(6) Manifold sub-plate kit individual wiring

● M4GD sub-plate

M4GD1 R - 00 - ( ) - 2

Ⓐ Model No.

Code	Description
Ⓐ Model No.	
M4GD1	Metal base, 4G1 size, body piping
M4GD2	Metal base, 4G2 size, body piping
M4GD3	Metal base, 4G3 size, body piping

Ⓑ Pilot exhaust method

Ⓑ Pilot exhaust method	
Blank	Common exhaust (Pilot exhaust check valve built-in)
C	Atmosphere release (*1)

Ⓒ Station No.

Ⓒ Station No.	
2	2 stations
to	to
20	Refer to the specifications page for the max. station number.

*1 Available as custom order.

● M4GE1 sub-plate

M4GE1R - C4 - ( ) ( ) D - 2

Ⓐ Port size

Code	Description	
Ⓐ Port size		
Port	**4(A), 2(B) port**	**P/R1/R2 port**
C4	ø4 push-in fitting	Rc1/8
C6	ø6 push-in fitting	
CL4	ø4 push-in L-fitting (upward)	
CL6	ø6 push-in L-fitting (upward)	
CD4	ø4 push-in L-fitting (downward)	
CD6	ø6 push-in L-fitting (downward)	
M5	M5	

Ⓑ Option

Ⓑ Option		
Blank		
F	A/B port filter integrated	(*1)

Ⓒ Pilot exhaust method

Ⓒ Pilot exhaust method		
Blank	Common exhaust (Pilot exhaust check valve built-in)	
C	Atmosphere release	(*2)

Ⓓ Mount

Ⓓ Mount		
Blank	Direct mount	
D	DIN rail mount	(*3)

Ⓔ Station No.

Ⓔ Station No.	
2	2 stations
to	to
20	Refer to the specifications page for the max. station number.

*1: A filter is built into the P-port as standard.
*2: Available as custom order.
*3: The DIN rail kit needs to be prepared separately.

Related parts

(6) Manifold sub-plate kit individual wiring

● M4GE2/3 sub-plate

M4GE2 R - C4 - □□ - 2

Ⓐ Model No.

Code	Description
Ⓐ Model No.	
M4GE2	Metal base 4G2 size base piping
M4GE3	Metal base 4G3 size base piping

Ⓑ Port size

Port	4(A), 2(B) port	Ⓐ Model No. M4GE2 P/R1/R2 port (1) = Rc1/4 (2) = Rc3/8	Ⓐ Model No. M4GE3 P/R1/R2 port (1) = Rc1/4 (2) = Rc3/8
C4	ø4 push-in fitting	(1)	
C6	ø6 push-in fitting	(1)	(2)
C8	ø8 push-in fitting	(1)	(2)
C10	ø10 push-in fitting		(2)
CL6	ø6 push-in L-fitting (upward)	(1)	
CL8	ø8 push-in L-fitting (upward)	(1)	(2)
CL10	ø10 push-in L-fitting (upward)		(2)
CD6	ø6 push-in L-fitting (downward)	(1)	
CD8	ø8 push-in L-fitting (downward)	(1)	(2)
CD10	ø10 push-in L-fitting (downward)		(2)
06	Rc1/8	(1)	
08	Rc1/4		(3)

Ⓒ Option

Blank	
F	A/B port filter built in (*1)

Ⓓ Pilot exhaust method

Blank	Common exhaust (Pilot exhaust check valve built-in)
C	Atmosphere release (*2)

Ⓔ Station No.

2	2 stations
to	to
20	Refer to the specifications page for the max. station number.

*1: A filter is built into the P-port as standard.
*2: Available as custom order.
*3: Direct mount/DIN rail mount are common.
*4: The DIN rail kit must be prepared separately.

Related parts

(7) Manifold sub-plate kit reduced wiring

● M4GD sub-plate

M4GD1 R - 00 - T* - ○ - 2

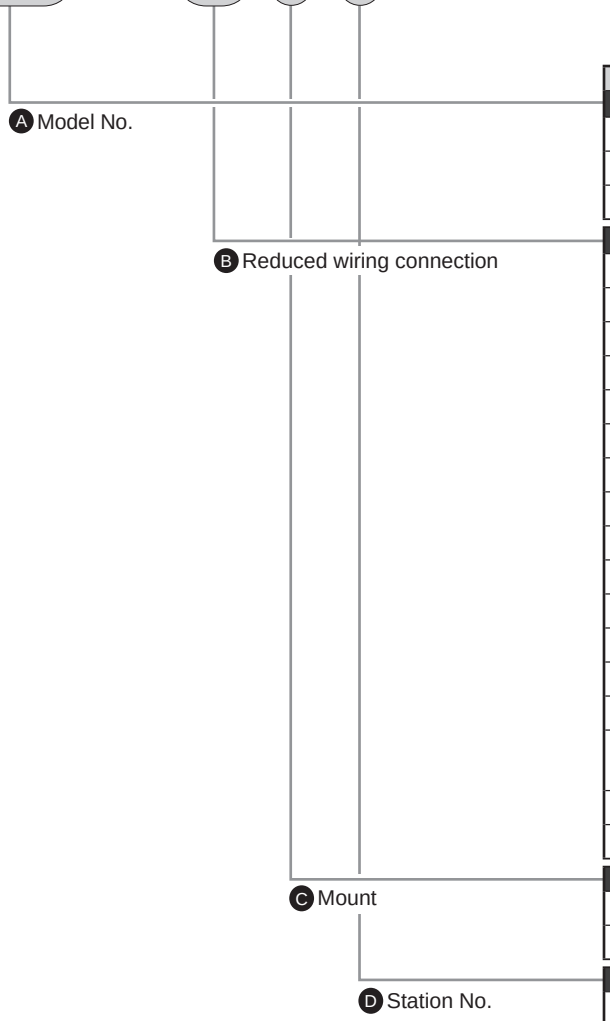

Code	Description	
Ⓐ Model No.		
M4GD1	Metal base, 4G1 size, body piping	
M4GD2	Metal base, 4G2 size, body piping	
M4GD3	Metal base, 4G3 size, body piping	
Ⓑ Reduced wiring connection		
T10	Common terminal block (M3 thread)	Left-side spec
T10R		Right-side spec
T11	Common terminal block (clamping)	Left-side spec
T11R		Right-side spec
T30	D sub-connector	Left-side spec
T30R		Right-side spec
T50	20-pin flat cable connector (with power supply terminal)	Left-side spec
T50R		Right-side spec
T51	20-pin flat cable connector (without power supply terminal)	Left-side spec
T51R		Right-side spec
T52	10-pin flat cable connector (without power supply terminal)	Left-side spec
T52R		Right-side spec
T53	26-pin flat cable connector (without power supply terminal)	Left-side spec
T53R		Right-side spec
T56	20-pin flat cable connector (without power supply terminal) For serial transmission device unit OPP3 connection	Left-side spec
T81	For serial transmission device (adapter) station OPP7 connection (16-point output)	Left-side spec
T82	For serial transmission device (adapter) station OPP7 connection (32-point output)	Left-side spec
Ⓒ Mount *1		
Blank	Direct mount	
D	DIN rail mount	(*2)
Ⓓ Station No.		
2	2 stations	
to	to	
20	Refer to the specifications page for the max. station number.	

1: For T8, select one mounting.
The only alternative to T8* is blank.
*2: The DIN rail kit must be prepared separately.

Related parts

(7) Manifold sub-plate kit reduced wiring

● M4GE sub-plate

M4GE1 R - CL4 - T10 - ○ ○ - 2

Ⓐ Model No.

Code	Description
Ⓐ Model No.	
M4GE1	Metal base 4G1 size base piping
M4GE2	Metal base 4G2 size base piping
M4GE3	Metal base 4G3 size base piping

Ⓑ Port size

Port	4(A), 2(B) port	Ⓐ Model No. M4GE1	M4GE2	M4GE3
		P/R1/R2 port (1) = Rc1/8 (2) = Rc1/4 (3) = Rc3/8		
C4	ø4 push-in fitting	(1)	(2)	
C6	ø6 push-in fitting	(1)	(2)	(3)
C8	ø8 push-in fitting		(2)	(3)
C10	ø10 push-in fitting			(3)
CL4	ø4 push-in L-fitting (upward)	(1)		
CL6	ø6 push-in L-fitting (upward)	(1)	(2)	
CL8	ø8 push-in L-fitting (upward)		(2)	(3)
CL10	ø10 push-in L-fitting (upward)			(3)
CD4	ø4 push-in L-fitting (downward)	(1)		
CD6	ø6 push-in L-fitting (downward)	(1)	(2)	
CD8	ø8 push-in L-fitting (downward)		(2)	(3)
CD10	ø10 push-in L-fitting (downward)			(3)
M5	M5	(1)		
06	Rc1/8		(2)	
08	Rc1/4			(3)

Ⓒ Reduced wiring connection

T10	Common terminal block (M3 thread)	Left-side spec
T10R		Right-side spec
T11	Common terminal block (clamping)	Left-side spec
T11R		Right-side spec
T30	D sub-connector	Left-side spec
T30R		Right-side spec
T50	20-pin flat cable connector (with power supply terminal)	Left-side spec
T50R		Right-side spec
T51	20-pin flat cable connector (without power supply terminal)	Left-side spec
T51R		Right-side spec
T52	10-pin flat cable connector (without power supply terminal)	Left-side spec
T52R		Right-side spec
T53	26-pin flat cable connector (without power supply terminal)	Left-side spec
T53R		Right-side spec
T56	20-pin flat cable connector (without power supply terminal) For serial transmission device unit OPP3 connection	Left-side spec
T81	For serial transmission device (adapter) station OPP7 connection (16-point output)	Left-side spec
T82	For serial transmission device (adapter) station OPP7 connection (32-point output)	Left-side spec

Ⓓ Option

Blank	
F	A/B port filter integrated *1

Ⓔ Mount *2

Blank	Direct mount
D	DIN rail mount (*3)

Ⓕ Station No.

2	2 stations
to	to
20	Refer to the specifications page for the max. station number.

*1: A filter is built into the P-port as standard.
2: For T8, select one mounting.
The only alternative to T8* is blank.
*3: The DIN rail kit must be prepared separately.

Related parts

(8) Coil assembly

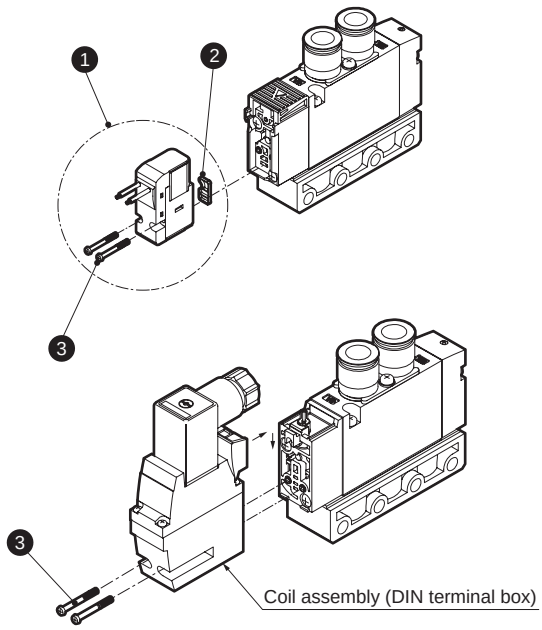

Coil assembly

No.	Part name	Model No.
1	Coil assembly	4GR-[electrical connections]-□-COIL-[voltage] Blank: Standard A: Ozone proof E* : E-connector E*J : Socket with cover B* : DIN terminal box Blank : Grommet lead wire B includes the DIN terminal box. BN does not include the DIN terminal box.

Coil parts

No.	Part name	Part model No.
2	Coil gasket	4GR-COIL-GASKET
3	Mounting screw	4GR-COIL-SET-SCREW

(9) Lead wire related parts

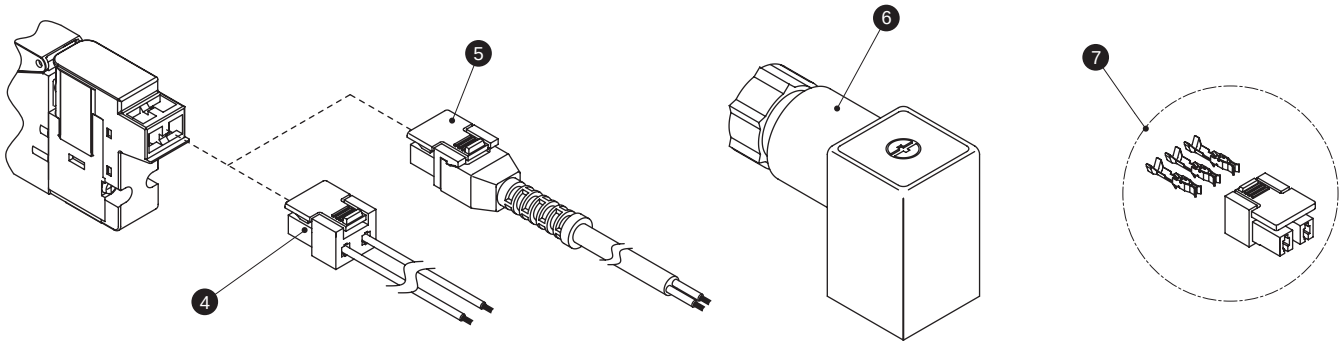

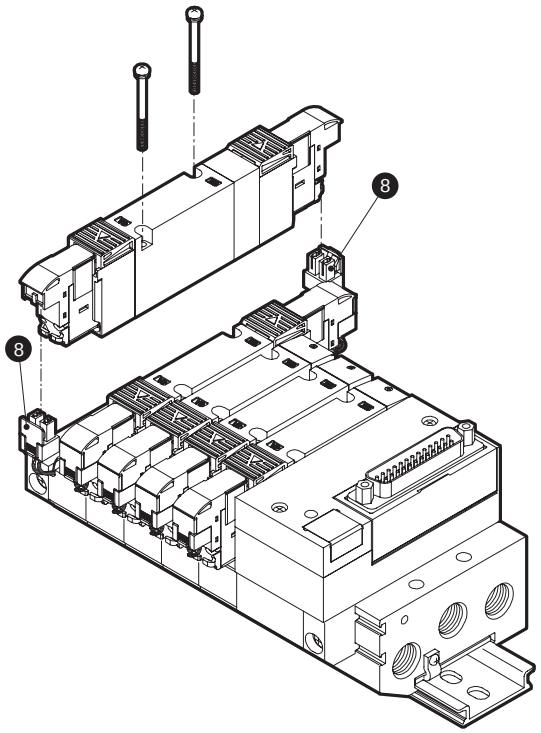

Socket assembly, DIN terminal box assembly

No.	Part name	Model No.
4	E-connector socket assembly	4GR-SOCKET-ASSY-E **-[Voltage]
5	Socket assembly with cover	4GR-SOCKET-ASSY-E**J
6	DIN terminal box assembly	4GR-TERMINAL-BOX-[Voltage]

Socket set

No.	Part model No.
7	4GR-SOCKET-SET

A-connector socket assembly

No.	Part model No.
8	4G[*1]R-SOCKET-ASSY-A[*2][*3]-[*4]

*1 Series flow rate size
*2 Blank: Left side, R: Right side
*3 A: aSOL side, B: bSOL side
*4 Row No.
Note: Refer to "Selection of model No. of socket assembly for expansion" (page 837) for selection.

How to fill out metal base M4G series manifold specifications sheet

● Manifold model No. (example)

M 4 G (D/E) 1 8 0R- CX - T30 [ ] - 9 - 3

Solenoid valve | Solenoid position | Port size | Electrical connections | Terminal connector pin array | Station No. | Voltage

Solenoid valve model No.	Fitting CX A	Fitting CX B	Installation position 1	2	3	4	5	6	7	8	9	10	11	12	13	14	15	16	17	18	19	20	21	22	23	24	Quantity
4G E 1 1 9R- CX	C6	X	○	○																							2
4G E 1 1 9R- C6					○	○																					2
4G E 1 2 9R- C6							○	○																			2
4G E 1 5 9R- CX	C6	C4							○	○																	2
4G [ ] 1 [ ] 9R- [ ]																											
3G D 1 [ ] 9R- [ ]																											
3G D 1 [ ] 9R- [ ]																											
Masking plate 4G1R-MP(S)																											
Masking plate 4G1R-MP(D)											○																1

Indicate X for a plug

Fill in "CX" when changing the fitting combination

Mounting rail	L2=	Accessory	Blanking plug				Thread plug		Silencer			
			GWP4-B		GWP6-B		4G1R-M5P		SLW-6S		SLW-6A	
			Cable with D sub-connector		4GR-CABLE-D0□-□			Push-in fitting tube remover (attached as standard) ☑ Not required (check the box)				

If the tube remover (standard attachment) is not required, place a check.

* A reference circuit diagram for the above manifold (example) is shown on the next page.

Precautions for fitting mix CX

The A/B port fitting can be selected freely by indicating "CX" in the port size area.

Selectable cartridge fittings	
4G1	C4, C6, X (plug)
4G2	C4, C6, C8, X (plug)
4G3	C6, C8, C10, X (plug)

* A/B port fitting mix with the body piping is not supported.

How to use base piping M4GE*10 as a 3-port valve

This can be used as the NO/NC by attaching a plug cartridge on one side of the A/B port.
Indicate "X" in the fitting CX column.

Switching method	Plug mounting port
NC (Normally closed)	B
NO (Normally open)	A

For female thread specifications, indicate the required number of plugs in the "Thread plug" area at the end. Female threads and cartridge fitting cannot be used together in one manifold set.

Elbow specifications

- The push-in L fitting (upward) is used only for the single solenoid manifold.
  Port A is a long elbow and port B a short elbow.
- A/B port sizes do not differ for elbow specifications.

From the manifold specifications sheet for each model, select and fill out the appropriate form.

- Individual wiring...M4G(D/E)1 (page 594), M4G(D/E)2 (page 595), M4G(D/E)3 (page 596)
- Reduced wiring
  - · Common terminal block (T1*), D sub-connector (T30) : M4G(D/E)1 (page 597), M4G(D/E)2 (page 598), M4G(D/E)3 (page 599)
  - · Flat cable connector (T5*) : M4G(D/E)1 (page 600), M4G(D/E)2 (page 601), M4G(D/E)3 (page 602)
  - · Serial transmission (T6G1) : M4G(D/E)1 (page 603), M4G(D/E)2 (page 604), M4G(D/E)3 (page 605)
  - · Serial transmission (T8*) : M4G(D/E)1 (page 606), M4G(D/E)2 (page 607), M4G(D/E)3 (page 608)

*1: Select the silencer mounting after confirming the dimensions.
*2: Use SLW-8S for the M4GD2 DIN rail mount. Interference occurs if SLW-8A is used.

How to fill out wiring specifications sheet

Not required for standard wiring and double wiring.

● Wiring specifications sheet (example)

Complete these specifications when specifying the wiring order and additional cables.

Connector pin No.		Installation position															
T30/T30R	T50/T50R/T6*	1	2	3	4	5	6	7	8	9	10	11	12	13	14	15	16	17
1	1	a																
14	2		a															
2	3			a														
15	4																	
3	5				a													
16	6																	
4	7					a												
17	8					b												
5	9 - Power supply						a											
18	10 + (COM) Power supply						b											
6	11							a										
19	12							b										
7	13								a									
20	14								b									
8	15									(a)								
21	16									(b)								
9	17																	
22	18																	
10	19 - Power supply																	
23	20 + (COM) Power supply																	
11																		
24																		
12																		
25																		
13 (COM)																		

Spare cable wiring
Precautions (1)

* Note that when T50 wiring is used, the COM polarity is + (plus).
* When T50 wiring is used, connector pin numbers 9, 10, 19, and 20 cannot be specified, because they are used for the external input power supply.
* Wiring is sequential from connector pin No. 1 in standard wiring. Contact CKD for special wiring order.

Precautions regarding spare wiring

(1) Spare wires are provided on the masking plate for the reduced wiring manifold. (Refer to page 836)
The number of wires for spare wiring can be specified by selecting the masking plate within the specifications sheet.
4G *R -MP(S) ... 1 piece
4G *R -MP(D) ... 2 pieces
Indicate (a) or (b) in manifold specifications sheet for masking plate reserved wires.

Reference circuit diagram The simplified circuit diagram of the manifold model No. (example) on the previous page is shown below.

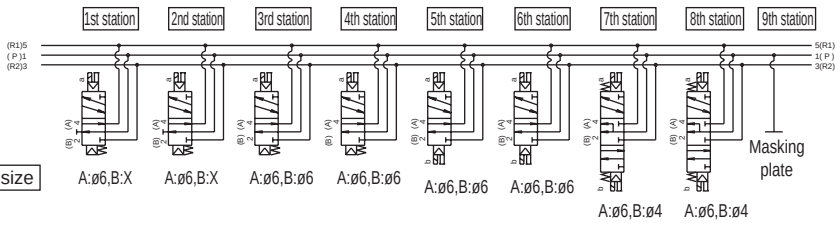

Port size A:ø6,B:X | A:ø6,B:X | A:ø6,B:ø6 | A:ø6,B:ø6 | A:ø6,B:ø6 | A:ø6,B:ø6 | A:ø6,B:ø4 | A:ø6,B:ø4

* The manifold station numbers are set in order from the left with the piping port facing forward.

M4G1 individual wiring

M4GD/E1 Manifold specifications sheet

Issued / /

Company

Contact

Order No.

● Contact ● Quantity set(s) ● Delivery date /

Slip No.	Order No.

● Manifold model No.

M ☐ GD/E1 ☐ 0R- ☐ - ☐ ☐ ☐ ☐ - ☐ - ☐

Type of solenoid valve / Solenoid position / Port size / Electrical connections / Other options / Mount / Pilot exhaust method / Station No. / Voltage

Solenoid valve model No.	Fitting CX		Valve installation position																							Quantity
	A	B	1	2	3	4	5	6	7	8	9	10	11	12	13	14	15	16	17	18	19	20	21	22	23	24	
4G ☐ 1 ☐ 9R- ☐																											
4G ☐ 1 ☐ 9R- ☐																											
4G ☐ 1 ☐ 9R- ☐																											
4G ☐ 1 ☐ 9R- ☐																											
4G ☐ 1 ☐ 9R- ☐																											
3G ☐ 1 ☐ 9R- ☐																											
3G ☐ 1 ☐ 9R- ☐																											
Masking plate 4G1R-MP- ☐																											
Air supply spacer 4G1R-P- ☐																											
In-stop valve spacer 4G1R-IS																											
Exhaust spacer 4G1R-R- ☐																											

Mounting rail	L_2= ☐ * Write an integer multiple of 12.5.	Accessory	Blanking plug				Thread plug		Silencer			
			GWP4-B	☐	GWP6-B	☐	4G1R-M5P	☐	SLW-6S	☐	SLW-6A	☐
			Push-in fitting tube remover (attached as standard) ☐ Not required (check the box)									

M4G2 individual wiring

M4G$^{D}_{E}$2 Manifold specifications sheet

Issued / /

Company

Contact

Order No.

● Contact ● Quantity set(s) ● Delivery date /

Slip No.	Order No.

● Manifold model No.

M □ **G$^{D}_{E}$2** □ **0R-** □ - □ □ □ □ - □ - □

Solenoid valve | Solenoid position | Port size | Electrical connections | Other options | Mount | Pilot exhaust method | Station No. | Voltage

Solenoid valve model No.	Fitting CX		Valve installation position																							Quantity
	A	B	1	2	3	4	5	6	7	8	9	10	11	12	13	14	15	16	17	18	19	20	21	22	23	24	
4G□2□9R-□																											
4G□2□9R-□																											
4G□2□9R-□																											
4G□2□9R-□																											
4G□2□9R-□																											
3G□2□9R-□																											
3G□2□9R-□																											
Masking plate **4G2R-MP-** □																											
Air supply spacer **4G2R-P-** □																											
In-stop valve spacer **4G2R-IS**																											
Exhaust spacer **4G2R-R-** □																											

Mounting rail	L_2= □ * Write an integer multiple of 12.5.	Accessory	Blanking plug						Thread plug		Silencer			
			GWP4-B		**GWP6-B**		**GWP8-B**		**4G2R-06P**		**SLW-8S**		**SLW-8A**	

M4G3 individual wiring

M4G$^{D}_{E}$3 Manifold specifications sheet

Issued / /

Company

Contact

Order No.

● Contact ● Quantity set(s) ● Delivery date /

Slip No.	Order No.

● Manifold model No.

M [ ] **G$^{D}_{E}$3** [ ] **0R-** [ ] - [ ] [ ] [ ] [ ] - [ ] - [ ]

Solenoid valve | Solenoid position | Port size | Electrical connections | Other options | Mount | Pilot exhaust method | Station No. | Voltage

Solenoid valve model No.	Fitting CX		Valve installation position																							Quantity
	A	B	1	2	3	4	5	6	7	8	9	10	11	12	13	14	15	16	17	18	19	20	21	22	23	24	
4G [ ] 3 [ ] 9R- [ ]																											
4G [ ] 3 [ ] 9R- [ ]																											
4G [ ] 3 [ ] 9R- [ ]																											
4G [ ] 3 [ ] 9R- [ ]																											
4G [ ] 3 [ ] 9R- [ ]																											
3GD3 [ ] 9R- [ ]																											
3GD3 [ ] 9R- [ ]																											
Masking plate 4G3R-MP- [ ]																											
Air supply spacer 4G3R-P- [ ]																											
In-stop valve spacer 4G3R-IS																											
Exhaust spacer 4G3R-R- [ ]																											

Mounting rail	L_2= [ ] * Write an integer multiple of 12.5.	Accessory	Blanking plug						Thread plug		Silencer			
			GWP6-B		GWP8-B		GWP10-B		4G3R-08P		SLW-10A		SLW-10L	

M4G1 reduced wiring

M4G$^{D}_{E}$1-T1/3 Manifold specifications sheet

Issued / /

Company

Contact

Order No.

● Contact ● Quantity set(s) ● Delivery date /

Slip No. | Order No.

● Manifold model No.

M □ G$^{D}_{E}$1 □ 0R- □ - □ □ □ □ □ - □ - □

Solenoid valve | Solenoid position | Port size | Reduced wiring connection | Terminal connector pin array | Option | Mount | Pilot exhaust method | Station No. | Voltage

Solenoid valve model No.	Fitting CX A	Fitting CX B	Valve installation position 1	2	3	4	5	6	7	8	9	10	11	12	13	14	15	16	17	18	19	20	21	22	23	24	Quantity
4G □ 1 □ 9R- □																											
4G □ 1 □ 9R- □																											
4G □ 1 □ 9R- □																											
4G □ 1 □ 9R- □																											
4G □ 1 □ 9R- □																											
3G □ 1 □ 9R- □																											
3G □ 1 □ 9R- □																											
Masking plate 4G1R-MP(S)- □																											
Masking plate 4G1R-MP(D)- □																											
Air supply spacer 4G1R-P- □																											
In-stop valve spacer 4G1R-IS																											
Exhaust spacer 4G1R-R- □																											

Mounting rail	L_2= □ * Write an integer multiple of 12.5.	Accessory	Blanking plug				Thread plug		Silencer			
			GWP4-B		GWP6-B		4G1R-M5P		SLW-6S		SLW-6A	
			Cable with D sub-connector		4GR-CABLE-D0□-□		Push-in fitting tube remover (attached as standard) □ Not required (check the box)					

● Wiring specifications sheet (Not required for standard wiring/double wiring. Complete these specifications when specifying the wiring order and additional cables)

Connector pin No. T10/T10R	T11/T11R	T30/T30R	Installation position 1	2	3	4	5	6	7	8	9	10	11	12	13	14	15	16	17	18	19	20	21	22	23	24
1	1	1																								
2	2	14																								
3	3	2																								
4	4	15																								
5	5	3																								
6	6	16																								
7	7	4																								
8	8	17																								
9	9	5																								
10	10	18																								
11	11	6																								
12	12	19																								
13	13	7																								
14	14	20																								
15	15	8																								
16	16	21																								
COM	17	9																								
COM	18	22																								
	19	10																								
	20	23																								
	21	11																								
	22	24																								
	23	12																								
	24	25																								
	COM	13 (COM)																								
	COM																									

M4G2 reduced wiring

M4G$^{D}_{E}$2-T1/3 Manifold specifications sheet

Issued / /

Company

Contact

Order No.

● Contact ● Quantity set(s) ● Delivery date /

Slip No.	Order No.

● Manifold model No.

M ☐ G$^{D}_{E}$2 ☐ 0R- ☐ - ☐ ☐ ☐ ☐ ☐ - ☐ - ☐

Solenoid valve | Solenoid position | Port size | Reduced wiring connection | Terminal connector pin array | Option | Mount | Pilot exhaust method | Station No. | Voltage

Solenoid valve model No.	Fitting CX A	Fitting CX B	Valve installation position 1	2	3	4	5	6	7	8	9	10	11	12	13	14	15	16	17	18	19	20	21	22	23	24	Quantity
4G ☐ 2 ☐ 9R- ☐																											
4G ☐ 2 ☐ 9R- ☐																											
4G ☐ 2 ☐ 9R- ☐																											
4G ☐ 2 ☐ 9R- ☐																											
4G ☐ 2 ☐ 9R- ☐																											
3G ☐ 2 ☐ 9R- ☐																											
3G ☐ 2 ☐ 9R- ☐																											
Masking plate 4G2R-MP(S)- ☐																											
Masking plate 4G2R-MP(D)- ☐																											
Air supply spacer 4G2R-P- ☐																											
In-stop valve spacer 4G2R-IS																											
Exhaust spacer 4G2R-R- ☐																											

Mounting rail	L_2= ☐ * Write an integer multiple of 12.5.	Accessory	Blanking plug						Thread plug		Silencer			
			GWP4-B	☐	GWP6-B	☐	GWP8-B	☐	4G2R-06P	☐	SLW-8S	☐	SLW-8A	☐
			Cable with D sub-connector	4GR-CABLE-D0☐-☐	☐									

● Wiring specifications sheet (Not required for standard wiring/double wiring. Complete these specifications when specifying the wiring order and additional cables)

Connector pin No. T10/T10R	T11/T11R	T30/T30R	Installation position 1	2	3	4	5	6	7	8	9	10	11	12	13	14	15	16	17	18	19	20	21	22	23	24
1	1	1																								
2	2	14																								
3	3	2																								
4	4	15																								
5	5	3																								
6	6	16																								
7	7	4																								
8	8	17																								
9	9	5																								
10	10	18																								
11	11	6																								
12	12	19																								
13	13	7																								
14	14	20																								
15	15	8																								
16	16	21																								
COM	17	9																								
COM	18	22																								
	19	10																								
	20	23																								
	21	11																								
	22	24																								
	23	12																								
	24	25																								
	COM	13 (COM)																								
	COM																									

M4G3 reduced wiring

M4G$^{D}_{E}$3-T1/3 Manifold specifications sheet

Issued / /

Company

Contact

Order No.

● Contact ● Quantity set(s) ● Delivery date /

Slip No. | Order No.

● Manifold model No.

M □ G$^{D}_{E}$3 □ 0R- □ - □ □ □ □ □ - □ - □

Solenoid valve | Solenoid position | Port size | Reduced wiring connection | Terminal connector pin array | Option | Mount | Pilot exhaust method | Station No. | Voltage

Solenoid valve model No.	Fitting CX A	Fitting CX B	Valve installation position 1	2	3	4	5	6	7	8	9	10	11	12	13	14	15	16	17	18	19	20	21	22	23	24	Quantity
4G □ 3 □ 9R- □																											
4G □ 3 □ 9R- □																											
4G □ 3 □ 9R- □																											
4G □ 3 □ 9R- □																											
4G □ 3 □ 9R- □																											
3GD3 □ 9R- □																											
3GD3 □ 9R- □																											
Masking plate 4G3R-MP(S)- □																											
Masking plate 4G3R-MP(D)- □																											
Air supply spacer 4G3R-P- □																											
In-stop valve spacer 4G3R-IS																											
Exhaust spacer 4G3R-R- □																											

Mounting rail	L_2= □ * Write an integer multiple of 12.5.	Accessory	Blanking plug						Thread plug		Silencer			
			GWP6-B	□	GWP8-B	□	GWP10-B	□	4G3R-08P	□	SLW-10A	□	SLW-10L	□
			Cable with D sub-connector		4GR-CABLE-D0□-□									

● Wiring specifications sheet (Not required for standard wiring/double wiring. Complete these specifications when specifying the wiring order and additional cables)

Connector pin No. T10/T10R	T11/T11R	T30/T30R	Installation position 1	2	3	4	5	6	7	8	9	10	11	12	13	14	15	16	17	18	19	20	21	22	23	24
1	1	1																								
2	2	14																								
3	3	2																								
4	4	15																								
5	5	3																								
6	6	16																								
7	7	4																								
8	8	17																								
9	9	5																								
10	10	18																								
11	11	6																								
12	12	19																								
13	13	7																								
14	14	20																								
15	15	8																								
16	16	21																								
COM	17	9																								
COM	18	22																								
	19	10																								
	20	23																								
	21	11																								
	22	24																								
	23	12																								
	24	25																								
	COM	13 (COM)																								
	COM																									

M4G1 reduced wiring

M4G$^{D}_{E}$1-T5 Manifold specifications sheet

Issued / /

Company

Contact

Order No.

● Contact ● Quantity set(s) ● Delivery date /

Slip No.	Order No.

● Manifold model No.

M ☐ G$^{D}_{E}$1 ☐ 0R- ☐ - ☐ ☐ ☐ ☐ ☐ - ☐ - ☐

Solenoid valve / Solenoid position / Port size / Reduced wiring connection / Terminal connector pin array / Option / Mount / Pilot exhaust method / Station No. / Voltage

Solenoid valve model No.	Fitting CX A	Fitting CX B	Valve installation position 1	2	3	4	5	6	7	8	9	10	11	12	13	14	15	16	17	18	19	20	21	22	23	24	Quantity
4G ☐ 1 ☐ 9R- ☐																											
4G ☐ 1 ☐ 9R- ☐																											
4G ☐ 1 ☐ 9R- ☐																											
4G ☐ 1 ☐ 9R- ☐																											
4G ☐ 1 ☐ 9R- ☐																											
3G ☐ 1 ☐ 9R- ☐																											
3G ☐ 1 ☐ 9R- ☐																											
Masking plate 4G1R-MP(S)- ☐																											
Masking plate 4G1R-MP(D)- ☐																											
Air supply spacer 4G1R-P- ☐																											
In-stop valve spacer 4G1R-IS																											
Exhaust spacer 4G1R-R- ☐																											

Mounting rail	L_2= ☐ * Write an integer multiple of 12.5.	Accessory	Blanking plug	Thread plug	Silencer
			GWP4-B ☐ GWP6-B ☐	4G1R-M5P ☐	SLW-6S ☐ SLW-6A ☐
			Push-in fitting tube remover (attached as standard) ☐ Not required (check the box)		

● Wiring specifications sheet (Not required for standard wiring/double wiring. Complete these specifications when specifying the wiring order and additional cables)

Connector pin No. T50/T50R	T51/T51R	T52/T52R	T53/T53R	Installation position 1	2	3	4	5	6	7	8	9	10	11	12	13	14	15	16	17	18	19	20	21	22	23	24
1	1	1	1																								
2	2	2	2																								
3	3	3	3																								
4	4	4	4																								
5	5	5	5																								
6	6	6	6																								
7	7	7	7																								
8	8	8	8																								
9 - Power supply	9	9 COM	9																								
10 + (COM) Power supply	10	10 COM	10																								
11	11		11																								
12	12		12																								
13	13		13																								
14	14		14																								
15	15		15																								
16	16		16																								
17	17		17																								
18	18		18																								
19 - Power supply	19 COM		19																								
20 + (COM) Power supply	20 COM		20																								
			21																								
			22																								
			23																								
			24																								
			25 COM																								
			26 COM																								

* Note that when T50 type wiring is used, the COM polarity is + (plus).
* When T50 wiring is used, connector pin numbers 9, 10, 19, and 20 cannot be specified, because they are used for the external input power supply.

M4G2 reduced wiring

M4G$^{D}_{E}$2-T5 Manifold specifications sheet

Issued / /

Company

Contact

Order No.

● Contact ● Quantity set(s) ● Delivery date /

Slip No.	Order No.

● Manifold model No.

M ☐ G$^{D}_{E}$2 ☐ 0R- ☐ - ☐ ☐ ☐ ☐ ☐ - ☐ - ☐

Solenoid valve / Solenoid position / Port size / Reduced wiring connection / Terminal connector pin array / Option / Mount / Pilot exhaust method / Station No. / Voltage

Solenoid valve model No.	Fitting CX A	Fitting CX B	Valve installation position 1	2	3	4	5	6	7	8	9	10	11	12	13	14	15	16	17	18	19	20	21	22	23	24	Quantity
4G ☐ 2 ☐ 9R- ☐																											
4G ☐ 2 ☐ 9R- ☐																											
4G ☐ 2 ☐ 9R- ☐																											
4G ☐ 2 ☐ 9R- ☐																											
4G ☐ 2 ☐ 9R- ☐																											
3G ☐ 2 ☐ 9R- ☐																											
3G ☐ 2 ☐ 9R- ☐																											
Masking plate 4G2R-MP(S)- ☐																											
Masking plate 4G2R-MP(D)- ☐																											
Air supply spacer 4G2R-P- ☐																											
In-stop valve spacer 4G2R-IS																											
Exhaust spacer 4G2R-R- ☐																											

Mounting rail	L_2= ☐ * Write an integer multiple of 12.5.	Accessory	Blanking plug						Thread plug		Silencer			
			GWP4-B	☐	GWP6-B	☐	GWP8-B	☐	4G2R-06P	☐	SLW-8S	☐	SLW-8A	☐

● Wiring specifications sheet (Not required for standard wiring/double wiring. Complete these specifications when specifying the wiring order and additional cables)

Connector pin No. T50/T50R	T51/T51R	T52/T52R	T53/T53R	Installation position 1	2	3	4	5	6	7	8	9	10	11	12	13	14	15	16	17	18	19	20	21	22	23	24
1	1	1	1																								
2	2	2	2																								
3	3	3	3																								
4	4	4	4																								
5	5	5	5																								
6	6	6	6																								
7	7	7	7																								
8	8	8	8																								
9 - Power supply	9	9 COM	9																								
10 + (COM) Power supply	10	10 COM	10																								
11	11		11																								
12	12		12																								
13	13		13																								
14	14		14																								
15	15		15																								
16	16		16																								
17	17		17																								
18	18		18																								
19 - Power supply	19 COM		19																								
20 + (COM) Power supply	20 COM		20																								
			21																								
			22																								
			23																								
			24																								
			25 COM																								
			26 COM																								

* Note that when T50 type wiring is used, the COM polarity is + (plus).

* When T50 wiring is used, connector pin numbers 9, 10, 19, and 20 cannot be specified, because they are used for the external input power supply.

M4G3 reduced wiring

M4G$^{D}_{E}$3-T5 Manifold specifications sheet

Issued / /

Company

Contact

Order No.

● Contact ● Quantity set(s) ● Delivery date /

Slip No.	Order No.

● Manifold model No.

M [ ] **G$^{D}_{E}$3** [ ] **0R-** [ ] - [ ] [ ] [ ] [ ] [ ] [ ] - [ ] - [ ]

Solenoid valve | Solenoid position | Port size | Reduced wiring connection | Terminal connector pin array | Option | Mount | Pilot exhaust method | Station No. | Voltage

Solenoid valve model No.	Fitting CX A	Fitting CX B	Valve installation position 1	2	3	4	5	6	7	8	9	10	11	12	13	14	15	16	17	18	19	20	21	22	23	24	Quantity
4G [ ] 3 [ ] 9R- [ ]																											
4G [ ] 3 [ ] 9R- [ ]																											
4G [ ] 3 [ ] 9R- [ ]																											
4G [ ] 3 [ ] 9R- [ ]																											
4G [ ] 3 [ ] 9R- [ ]																											
3GD3 [ ] 9R- [ ]																											
3GD3 [ ] 9R- [ ]																											
Masking plate 4G3R-MP(S)- [ ]																											
Masking plate 4G3R-MP(D)- [ ]																											
Air supply spacer 4G3R-P- [ ]																											
In-stop valve spacer 4G3R-IS																											
Exhaust spacer 4G3R-R- [ ]																											

Mounting rail	L_2= [ ] * Write an integer multiple of 12.5.	Accessory	Blanking plug						Thread plug		Silencer			
			GWP6-B	[ ]	GWP8-B	[ ]	GWP10-B	[ ]	4G3R-08P	[ ]	SLW-10A	[ ]	SLW-10L	[ ]

● Wiring specifications sheet (Not required for standard wiring/double wiring. Complete these specifications when specifying the wiring order and additional cables)

Connector pin No. T50/T50R	T51/T51R	T52/T52R	T53/T53R	Installation position 1	2	3	4	5	6	7	8	9	10	11	12	13	14	15	16	17	18	19	20	21	22	23	24
1	1	1	1																								
2	2	2	2																								
3	3	3	3																								
4	4	4	4																								
5	5	5	5																								
6	6	6	6																								
7	7	7	7																								
8	8	8	8																								
9 - Power supply	9	9 COM	9																								
10 + (COM) Power supply	10	10 COM	10																								
11	11		11																								
12	12		12																								
13	13		13																								
14	14		14																								
15	15		15																								
16	16		16																								
17	17		17																								
18	18		18																								
19 - Power supply	19 COM		19																								
20 + (COM) Power supply	20 COM		20																								
			21																								
			22																								
			23																								
			24																								
			25 COM																								
			26 COM																								

* When T50 wiring is used, the COM polarity is + (positive).
* When T50 wiring is used, connector pin numbers 9, 10, 19, and 20 cannot be specified, because they are used for the external input power supply.

M4G1 Serial transmission

M4G$^{D}_{E}$1-T6G1 Manifold specifications sheet

Issued / /

Company

Contact

Order No.

● Contact ● Quantity set(s) ● Delivery date /

Slip No.	Order No.

● Manifold model No.

M ☐ G$^{D}_{E}$1 ☐ 0R- ☐ - T6G1 ☐ ☐ D ☐ - ☐ - 3

Solenoid valve | Solenoid position | Port size | Serial transmission | Terminal/connector pin array | Option | Pilot exhaust method | Station No. | Voltage

Solenoid valve model No.	Fitting CX		Valve installation position																Quantity
	A	B	1	2	3	4	5	6	7	8	9	10	11	12	13	14	15	16	
4G☐1☐9R-☐																			
4G☐1☐9R-☐																			
4G☐1☐9R-☐																			
4G☐1☐9R-☐																			
4G☐1☐9R-☐																			
3G☐1☐9R-☐																			
3G☐1☐9R-☐																			
Masking plate **4G1R-MP(S)-** ☐																			
Masking plate **4G1R-MP(D)-** ☐																			
Air supply spacer **4G1R-P-** ☐																			
In-stop valve spacer **4G1R-IS**																			
Exhaust spacer **4G1R-R-** ☐																			

Mounting rail	L_2= ☐ * Write an integer multiple of 12.5.	Accessory	Blanking plug				Thread plug		Silencer			
			GWP4-B	☐	**GWP6-B**	☐	**4G1R-M5P**	☐	**SLW-6S**	☐	**SLW-6A**	☐
			Push-in fitting tube remover (attached as standard) ☐ Not required (check the box)									

● Wiring specifications sheet (Not required for standard wiring/double wiring. Complete these specifications when specifying the wiring order and additional cables)

Connector pin No.		Installation position															
T6G1		1	2	3	4	5	6	7	8	9	10	11	12	13	14	15	16
T6G1: CC-Link 16 points	1																
	2																
	3																
	4																
	5																
	6																
	7																
	8																
	9																
	10 COM																
	11																
	12																
	13																
	14																
	15																
	16																
	17																
	18																
	19																
	20 COM																

M4G2 Serial transmission

M4G□□2-T6G1 Manifold specifications sheet

Issued / /

Company

Contact

Order No.

● Contact ● Quantity set(s) ● Delivery date /

Slip No.	Order No.

● Manifold model No.

M [ ] **G**□□ **2** [ ] **0R-** [ ] **- T6G1** [ ] [ ] **D** [ ] **-** [ ] **- 3**

Solenoid valve / Solenoid position / Port size / Serial transmission / Terminal/connector pin array / Option / Pilot exhaust method / Station No. / Voltage

Solenoid valve model No.	Fitting CX A	Fitting CX B	Valve installation position 1	2	3	4	5	6	7	8	9	10	11	12	13	14	15	16	Quantity
4G [ ] 2 [ ] 9R- [ ]																			
4G [ ] 2 [ ] 9R- [ ]																			
4G [ ] 2 [ ] 9R- [ ]																			
4G [ ] 2 [ ] 9R- [ ]																			
4G [ ] 2 [ ] 9R- [ ]																			
3G [ ] 2 [ ] 9R- [ ]																			
3G [ ] 2 [ ] 9R- [ ]																			
Masking plate **4G2R-MP(S)-** [ ]																			
Masking plate **4G2R-MP(D)-** [ ]																			
Air supply spacer **4G2R-P-** [ ]																			
In-stop valve spacer **4G2R-IS**																			
Exhaust spacer **4G2R-R-** [ ]																			

Mounting rail	L_2= [ ] * Write an integer multiple of 12.5.	Accessory	Blanking plug						Thread plug		Silencer			
			GWP4-B		**GWP6-B**		**GWP8-B**		**4G2-06P**		**SLW-8S**		**SLW-8A**	

● Wiring specifications sheet (Not required for standard wiring/double wiring. Complete these specifications when specifying the wiring order and additional cables)

Connector pin No.		Installation position 1	2	3	4	5	6	7	8	9	10	11	12	13	14	15	16
T6G1																	
T6G1: CC-Link 16 points	1																
	2																
	3																
	4																
	5																
	6																
	7																
	8																
	9																
	10 COM																
	11																
	12																
	13																
	14																
	15																
	16																
	17																
	18																
	19																
	20 COM																

M4G3 Serial transmission

M4G$^{D}_{E}$3-T6G1 Manifold specifications sheet

Issued / /

Company

Contact

Order No.

● Contact ● Quantity set(s) ● Delivery date /

Slip No.	Order No.

● Manifold model No.

M ☐ **G$^{D}_{E}$3** ☐ **0R-** ☐ **- T6G1** ☐ ☐ **D** ☐ **-** ☐ **-** **3**

Solenoid valve | Solenoid position | Port size | Serial transmission | Terminal/connector pin array | Option | Pilot exhaust method | Station No. | Voltage

Solenoid valve model No.	Fitting CX		Valve installation position																Quantity
	A	B	1	2	3	4	5	6	7	8	9	10	11	12	13	14	15	16	
4G ☐ 3 ☐ 9R- ☐																			
4G ☐ 3 ☐ 9R- ☐																			
4G ☐ 3 ☐ 9R- ☐																			
4G ☐ 3 ☐ 9R- ☐																			
4G ☐ 3 ☐ 9R- ☐																			
3GD3 ☐ 9R- ☐																			
3GD3 ☐ 9R- ☐																			
Masking plate **4G3R-MP(S)-** ☐																			
Masking plate **4G3R-MP(D)-** ☐																			
Air supply spacer **4G3R-P-** ☐																			
In-stop valve spacer **4G3R-IS**																			
Exhaust spacer **4G3R-R-** ☐																			

Mounting rail	L_2= ☐ * Write an integer multiple of 12.5.	Accessory	Blanking plug						Thread plug		Silencer			
			GWP6-B		**GWP8-B**		**GWP10-B**		**4G3R-08P**		**SLW-10A**		**SLW-10L**	

● Wiring specifications sheet (Not required for standard wiring/double wiring. Complete these specifications when specifying the wiring order and additional cables)

Connector pin No.		Installation position															
T6G1		1	2	3	4	5	6	7	8	9	10	11	12	13	14	15	16
T6G1: CC-Link 16 points	1																
	2																
	3																
	4																
	5																
	6																
	7																
	8																
	9																
	10 COM																
	11																
	12																
	13																
	14																
	15																
	16																
	17																
	18																
	19																
	20 COM																

M4G1 Serial transmission thin

M4G$^{D}_{E}$1-T8 Manifold specifications sheet

Issued / /

Company

Contact

Order No.

● Contact ● Quantity set(s) ● Delivery date /

Slip No.	Order No.

● Manifold model No.

M □ G$^{D}_{E}$1 □ 0R- □ - □ □ □ □ □ - □ - 3

Solenoid valve | Solenoid position | Port size | Serial transmission | Terminal/connector pin array | Option | Mount | Pilot exhaust method | Station No. | Voltage

Solenoid valve model No.	Fitting CX		Valve installation position																				Quantity
	A	B	1	2	3	4	5	6	7	8	9	10	11	12	13	14	15	16	17	18	19	20	
4G □ 1 □ 9R- □																							
4G □ 1 □ 9R- □																							
4G □ 1 □ 9R- □																							
4G □ 1 □ 9R- □																							
4G □ 1 □ 9R- □																							
3G □ 1 □ 9R- □																							
3G □ 1 □ 9R- □																							
Masking plate 4G1R-MP(S)- □																							
Masking plate 4G1R-MP(D)- □																							
Air supply spacer 4G1R-P- □																							
In-stop valve spacer 4G1R-IS																							
Exhaust spacer 4G1R-R- □																							

Mounting rail: L_2= □
* Write an integer multiple of 12.5.

Accessory:

Blanking plug			Thread plug		Silencer			
PG-P2-B	GWP4-B		4G1R-M5P		SLW-6S		SLW-6A	
GWP6-B								

Push-in fitting tube remover (attached as standard) □ Not required (check the box)

● Wiring specifications sheet (Not required for standard wiring/double wiring. Complete these specifications when specifying the wiring order and additional cables)

Connector pin No. T8*				Installation position																			
				1	2	3	4	5	6	7	8	9	10	11	12	13	14	15	16	17	18	19	20
T8G1	CC-Link	NPN	16 points	1																			
T8G2			32 points	2																			
T8GP1		PNP	16 points	3																			
T8GP2			32 points	4																			
T8P1	PROFIBUS-DP	NPN	16 points	5																			
T8P2			32 points	6																			
T8PP1		PNP	16 points	7																			
T8PP2			32 points	8																			
T8EC1	EtherCAT	NPN	16 points	9																			
T8EC2			32 points	10																			
T8ECP1		PNP	16 points	11																			
T8ECP2			32 points	12																			
T8EN1	EtherNet/IP	NPN	16 points	13																			
T8EN2			32 points	14																			
T8ENP1		PNP	16 points	15																			
T8ENP2			32 points	16																			
T8D1	DeviceNet	NPN	16 points	17																			
T8D2			32 points	18																			
T8DP1		PNP	16 points	19																			
T8DP2			32 points	20																			
T8EB1	CC-Link IEF Basic	NPN	16 points	21																			
T8EB2			32 points	22																			
T8EBP1		PNP	16 points	23																			
T8EBP2			32 points	24																			
T8EP1	PROFINET	NPN	16 points	25																			
T8EP2			32 points	26																			
T8EPP1		PNP	16 points	27																			
T8EPP2			32 points	28																			
				29																			
				30																			
				31																			
				32																			

M4G$^{D}_{E}$2-T8 Manifold specifications sheet

Issued / /

Company

Contact

Order No.

● Contact ● Quantity set(s) ● Delivery date /

Slip No.	Order No.

● Manifold model No.

M □ G$^{D}_{E}$2 □ 0R- □ - □ □ □ □ □ - □ - 3

Solenoid valve / Solenoid position / Port size / Serial transmission / Terminal/connector pin array / Option / Mount / Pilot exhaust method / Station No. / Voltage

Solenoid valve model No.	Fitting CX A	Fitting CX B	Valve installation position 1	2	3	4	5	6	7	8	9	10	11	12	13	14	15	16	17	18	19	20	Quantity
4G □ 2 □ 9R- □																							
4G □ 2 □ 9R- □																							
4G □ 2 □ 9R- □																							
4G □ 2 □ 9R- □																							
4G □ 2 □ 9R- □																							
3G □ 2 □ 9R- □																							
3G □ 2 □ 9R- □																							
Masking plate **4G2R-MP(S)-** □																							
Masking plate **4G2R-MP(D)-** □																							
Air supply spacer **4G2R-P-** □																							
In-stop valve spacer **4G2R-IS**																							
Exhaust spacer **4G2R-R-** □																							

Mounting rail: L_2= □ * Write an integer multiple of 12.5.

Accessory:

Blanking plug				Thread plug		Silencer			
GWP4-B		**GWP6-B**		**4G2R-06P**		**SLW-8S**		**SLW-8A**	
GWP8-B									

● Wiring specifications sheet (Not required for standard wiring/double wiring. Complete these specifications when specifying the wiring order and additional cables)

Connector pin No. T8*				Installation position 1	2	3	4	5	6	7	8	9	10	11	12	13	14	15	16	17	18	19	20
T8G1	CC-Link	NPN	16 points	1																			
T8G2			32 points	2																			
T8GP1		PNP	16 points	3																			
T8GP2			32 points	4																			
T8P1	PROFIBUS-DP	NPN	16 points	5																			
T8P2			32 points	6																			
T8PP1		PNP	16 points	7																			
T8PP2			32 points	8																			
T8EC1	EtherCAT	NPN	16 points	9																			
T8EC2			32 points	10																			
T8ECP1		PNP	16 points	11																			
T8ECP2			32 points	12																			
T8EN1	EtherNet/IP	NPN	16 points	13																			
T8EN2			32 points	14																			
T8ENP1		PNP	16 points	15																			
T8ENP2			32 points	16																			
T8D1	DeviceNet	NPN	16 points	17																			
T8D2			32 points	18																			
T8DP1		PNP	16 points	19																			
T8DP2			32 points	20																			
T8EB1	CC-Link IEF Basic	NPN	16 points	21																			
T8EB2			32 points	22																			
T8EBP1		PNP	16 points	23																			
T8EBP2			32 points	24																			
T8EP1	PROFINET	NPN	16 points	25																			
T8EP2			32 points	26																			
T8EPP1		PNP	16 points	27																			
T8EPP2			32 points	28																			
				29																			
				30																			
				31																			
				32																			

M4G3 Serial transmission thin

M4G$^{D}_{E}$3-T8 Manifold specifications sheet

Issued / /

Company

Contact

Order No.

● Contact ● Quantity set(s) ● Delivery date /

Slip No.	Order No.

● Manifold model No.

M [ ] **G$^{D}_{E}$3** [ ] **0R-** [ ] **-** [ ] [ ] [ ] [ ] [ ] **-** [ ] **-** **3**

Solenoid valve | Solenoid position | Port size | Serial transmission | Terminal/connector pin array | Option | Mount | Pilot exhaust method | Station No. | Voltage

Solenoid valve model No.	Fitting CX A	Fitting CX B	Valve installation position 1	2	3	4	5	6	7	8	9	10	11	12	13	14	15	16	Quantity
4G [ ] 3 [ ] 9R- [ ]																			
4G [ ] 3 [ ] 9R- [ ]																			
4G [ ] 3 [ ] 9R- [ ]																			
4G [ ] 3 [ ] 9R- [ ]																			
4G [ ] 3 [ ] 9R- [ ]																			
3GA3 [ ] 9R- [ ]																			
3GA3 [ ] 9R- [ ]																			
Masking plate **4G3R-MP(S)-** [ ]																			
Masking plate **4G3R-MP(D)-** [ ]																			
Air supply spacer **4G3R-P-** [ ]																			
In-stop valve spacer **4G3R-IS**																			
Exhaust spacer **4G3R-R-** [ ]																			

Mounting rail	L_2= [ ] * Write an integer multiple of 12.5.	Accessory	Blanking plug		Blanking plug		Blanking plug		Thread plug		Silencer		Silencer	
			GWP6-B		**GWP8-B**		**GWP10-B**		**4G3R-08P**		**SLW-10A**		**SLW-10L**	

● Wiring specifications sheet (Not required for standard wiring/double wiring. Complete these specifications when specifying the wiring order and additional cables)

Connector pin No. T8*				Installation position	1	2	3	4	5	6	7	8	9	10	11	12	13	14	15	16
T8G1	CC-Link	NPN	16 points	1																
T8G2			32 points	2																
T8GP1		PNP	16 points	3																
T8GP2			32 points	4																
T8P1	PROFIBUS-DP	NPN	16 points	5																
T8P2			32 points	6																
T8PP1		PNP	16 points	7																
T8PP2			32 points	8																
T8EC1	EtherCAT	NPN	16 points	9																
T8EC2			32 points	10																
T8ECP1		PNP	16 points	11																
T8ECP2			32 points	12																
T8EN1	EtherNet/IP	NPN	16 points	13																
T8EN2			32 points	14																
T8ENP1		PNP	16 points	15																
T8ENP2			32 points	16																
T8D1	DeviceNet	NPN	16 points	17																
T8D2			32 points	18																
T8DP1		PNP	16 points	19																
T8DP2			32 points	20																
T8EB1	CC-Link IEF Basic	NPN	16 points	21																
T8EB2			32 points	22																
T8EBP1		PNP	16 points	23																
T8EBP2			32 points	24																
T8EP1	PROFINET	NPN	16 points	25																
T8EP2			32 points	26																
T8EPP1		PNP	16 points	27																
T8EPP2			32 points	28																
				29																
				30																
				31																
				32																

MN4GD/4GE

Block manifold

Pilot operated 3, 5-port valve

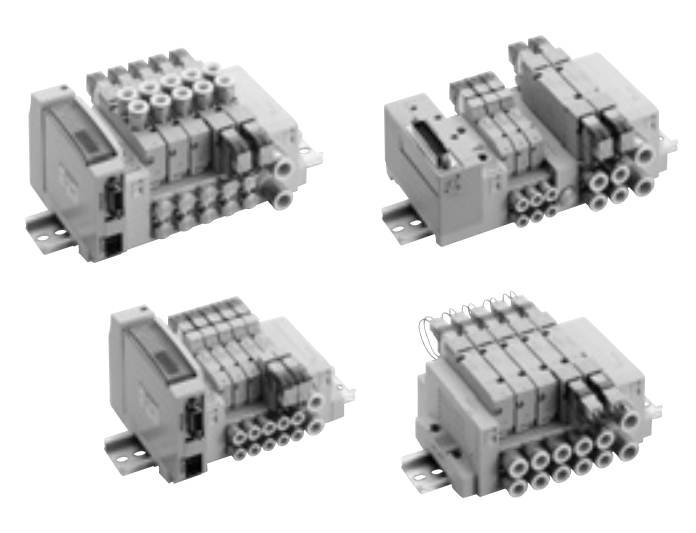

CONTENTS

Series variation	610
Electrical connections list (wire connections/circuit)	613
Product introduction	2
Individual wiring block manifold	
● Body piping (MN4GD1/2)	614
● Base piping (MN4GE1/2)	622
Reduced wiring block manifold	
● Body piping (MN4GD1/2-T*)	630
● Base piping (MN4GE1/2-T*)	646
Internal structure and parts list	662
Mix manifold	
● 4G1/2 (MN3GDX12/MN4GDX12/MN4GEX12)	666
Block components	668
Related products (air supply spacer/pilot check valve/ silencer/blanking plug, etc.)	679
Manifold and wiring specifications sheet	684
Technical data	
(1) Notes on wiring	815
(2) Exhaust check valve	851
(3) How to expand reduced wiring manifold	836
(4) Pneumatic system selection guide	844
⚠ Safety precautions	850

Series variation

MN4GD/4GE Series

* Refer to page 437 for metal base (integrated).

Series appearance			Model No.	Electrical connections	Position Number of solenoids JIS symbol	Valve performance: Flow characteristics C [dm³/(s·bar)] *1	Valve performance: Applicable cylinder bore size	Voltage (V)
Individual wiring manifold	Body piping	MN4GD180R 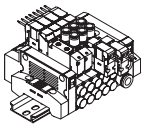	MN4GD1	Blank -E□	● 3-port valve 2-position single NC 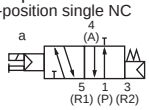	1.0 to 1.2	ø20 to ø40	100 AC 200 AC 24 DC 12 DC (*2)
			MN4GD2	Blank -E□ -B		2.2 to 2.5	ø40 to ø80	
	Base piping	MN4GE180R 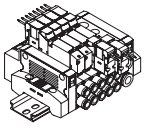	MN4GE1	Blank -E□	2-position single NO 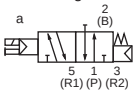	1.0 to 1.2	ø20 to ø40	
			MN4GE2	Blank -E□ -B		2.2 to 2.5	ø40 to ø80	
Reduced wiring manifold	Body piping	Terminal MN4GD280R 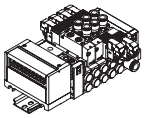	MN4GD1 (N3GD1) (N4GD1)	-T10 -T11 (-A2N)	● 5-port valve 2-position single 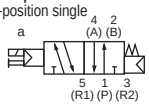	1.0 to 1.2	ø20 to ø40	24 DC 12 DC
			MN4GD2 (N3GD2) (N4GD2)			2.2 to 2.5	ø40 to ø80	
		Connector MN4GD280R 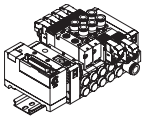	MN4GD1 (N3GD1) (N4GD1)	-T30 -T5□ (-A2N)	2-position double 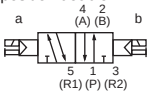	1.0 to 1.2	ø20 to ø40	24 DC 12 DC
			MN4GD2 (N3GD2) (N4GD2)			2.2 to 2.5	ø40 to ø80	
		Serial transmission MN4GD180R 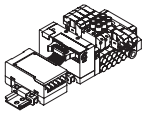	MN4GD1 (N3GD1) (N4GD1)	-T6G1 -T7□ -T8□ (-A2N)	3-position all ports closed 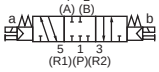	1.0 to 1.2	ø20 to ø40	24 DC
			MN4GD2 (N3GD2) (N4GD2)		3-position A/B/R connection 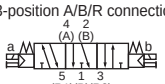	2.2 to 2.5	ø40 to ø80	
	Base piping	Terminal MN4GE180R 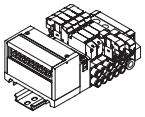	MN4GE1 (N4GE1)	-T10 -T11 (-A2N)	3-position P/A/B connection 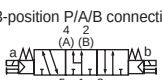	1.0 to 1.2	ø20 to ø40	24 DC 12 DC
			MN4GE2 (N4GE2)			2.2 to 2.5	ø40 to ø80	
		Connector MN4GE180R 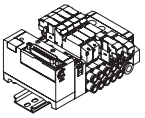	MN4GE1 (N4GE1)	-T30 -T5□ (-A2N)	● Two 3-port valves integrated NC/NC 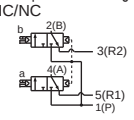	1.0 to 1.2	ø20 to ø40	24 DC 12 DC
			MN4GE2 (N4GE2)			2.2 to 2.5	ø40 to ø80	
		Serial transmission MN4GE280R 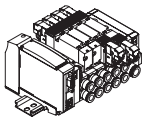	MN4GE1 (N4GE1)	-T6G1 -T7□ -T8□ (-A2N)		1.0 to 1.2	ø20 to ø40	24 DC
			MN4GE2 (N4GE2)			2.2 to 2.5	ø40 to ø80	

*1: Effective cross-sectional area S and sonic conductance C are converted as S ≈ 5.0 x C.
*2: The grommet lead wire specifications are compatible with DC voltage only.
*3: Only compatible with the base piping 2-position single model.
*4: Specifications for reduced wiring equipped manifolds. Only 12/24 VDC is supported.

Switching position									A/B piping connection port												Electrical connections												Selection page
2-position				3-position					Push-in fitting			Push-in L-fitting (upward) (*3)			Push-in L-fitting (downward)			Female thread		Single unit, individual wiring				Reduced wiring								
Normally closed	Normally open	Single	Double	All ports closed	ABR connection	⊔AB connection	Two 3-port valves integrated	Mix	ø4	ø6	ø8	ø4	ø6	ø8	ø4	ø6	ø8	M5	Rc1/8	Grommet lead (*2)	E-connector	EJ-connector	DIN terminal box	A-connector (*4)	Common terminal block	D-sub-connector	Flat cable with power supply terminal	Flat cable without power supply terminal	Serial transmission			
									C4	C6	C8	CL4	CL6	CL8	CD4	CD6	CD8	M5	06	Blank	E□	E□J	B□	A2N	T1□	T30	T50	T5□	T6G1	T7□	T8□	
●	●	●	●	●	●	●	●	●	●	●								●		●	●	●										614
●	●	●	●	●	●	●	●	●	●	●	●								●	●	●	●	●										
		●	●	●	●	●	●	●	●	●		●	●		●	●				●	●	●										622
		●	●	●	●	●	●	●	●	●	●		●	●		●	●			●	●	●	●									
●	●	●	●	●	●	●	●	●	●	●								●														630
●	●	●	●	●	●	●	●	●	●	●	●								●					●								
●	●	●	●	●	●	●	●	●	●	●								●						●		●	●	●				
●	●	●	●	●	●	●	●	●	●	●	●								●					●		●	●	●				
●	●	●	●	●	●	●	●	●	●	●								●						●					●	●	●	
●	●	●	●	●	●	●	●	●	●	●	●								●					●					●	●	●	
		●	●	●	●	●	●	●	●	●		●	●		●	●																646
		●	●	●	●	●	●	●	●	●	●		●	●		●	●							●								
		●	●	●	●	●	●	●	●	●		●	●		●	●										●	●	●				
		●	●	●	●	●	●	●	●	●	●		●	●		●	●							●								
		●	●	●	●	●	●	●	●	●		●	●		●	●													●	●	●	
		●	●	●	●	●	●	●	●	●	●		●	●		●	●							●								

Electrical connections

Discrete valve/individual wiring manifold

Blank Grommet lead wire Ⓐ

● **Lead wire length**
300 mm

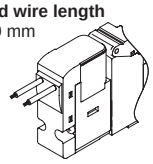

EO E-connector Ⓐ

● **Lead wire length**
300 mm
500 mm
1 m
2 m
3 m

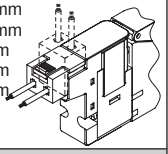

E0N E-connector without socket

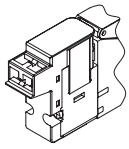

E1 E-connector with socket/terminal

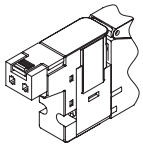

E2 E-connector ⒶⒷⒸ

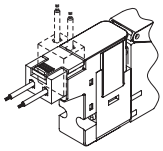

E2N E-connector without socket ⒷⒸ

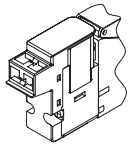

E3 E-connector with socket/terminal ⒷⒸ

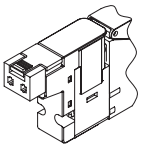

A2N A-connector downward without socket

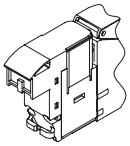

● For AC voltage, ⓐ dimension is 3.5 mm longer than DC voltage.

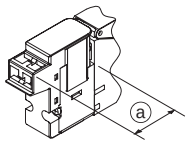

BN DIN terminal box (BN: Without terminal box)

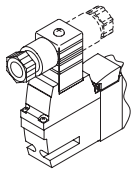

E*J EJ-connector Ⓐ

● **Lead wire length**
1 m
2 m
3 m

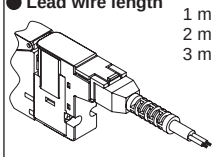

E2*J EJ-connector ⒶⒷⒸ

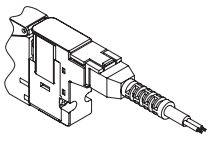

Reduced wiring manifold

T10 Common terminal block M3 thread specifications (left side)

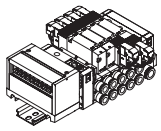

T10R Common terminal block M3 thread specifications (right side)

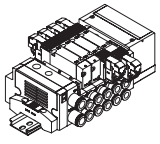

T11 Common terminal block clamping specifications (left side)

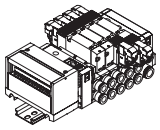

T11R Common terminal block clamping specifications (right side)

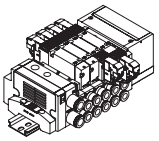

T30 D-sub-connector (left)

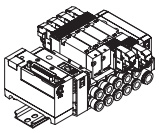

T30R D-sub-connector (right)

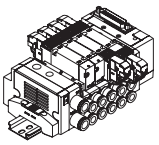

T50 Flat cable with power supply terminal (left side)

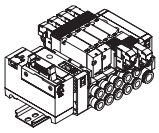

T50R Flat cable with power supply terminal (right side)

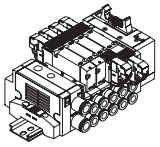

T5$^{1}_{3}$ Flat cable without power supply terminal (left side)

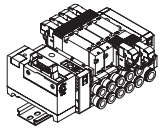

T5$^{1}_{3}$R Flat cable without power supply terminal (right side)

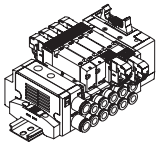

T6G1 Serial transmission

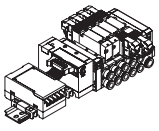

T7*0 Serial transmission
T7*1 Thin slot

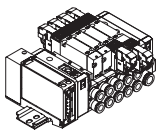

T8*1 Serial transmission
T8*2 thin slot

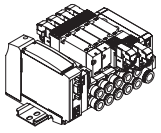

Manual operating device

Blank Non-locking/locking common

(Standard equipment)

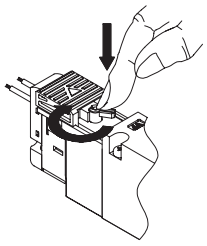

(1) For non-locking, push to turn ON release to turn OFF

(2) For locking push and turn 90° clockwise to hold the ON state Turn counterclockwise to release OFF

ⒶWith lead wire
ⒷWith indicator lamp
ⒸWith surge suppressor

Other options

H With exhaust check valve

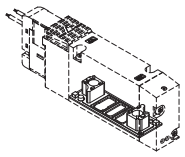

Standard for pilot exhaust

A Ozone/cutting fluid proof product

Select for coolant inflow and ozone measures.

F A/B port filter integrated

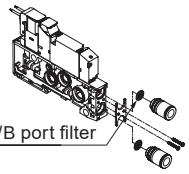

Z1 Air supply spacer
Z3 Exhaust spacer

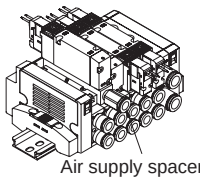

Pilot check valve (Separate mount)

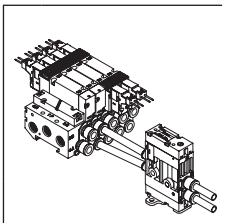

Electric connection circuit diagram

Electrical connections		Without lead wire	With lead wire	With indicator lamp	With surge suppressor	Without socket	Circuit diagram
Blank	Grommet lead wire		●				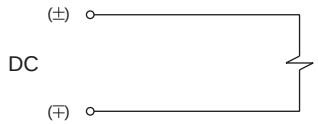
E0	E-connector		●				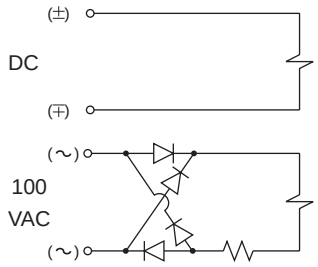
E0*J	EJ-connector		●				
E0N	E-connector					●	
E1	E-connector	●					
E2	E-connector		●	●	●		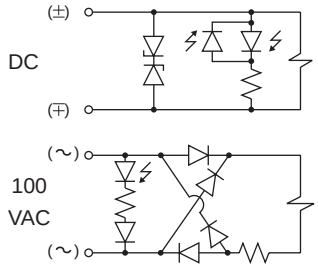
E2*J	EJ-connector		●	●	●		
E2N	E-connector			●	●	●	
E3	E-connector	●		●	●		
A2N	A-connector			●	●	●	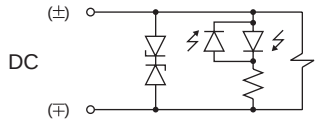
B	DIN terminal box	●		●	●		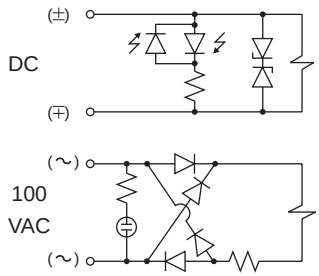
BN	DIN terminal box (Without terminal box)	●			●		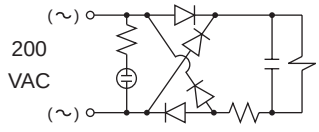

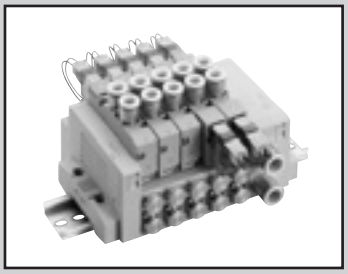

Individual wiring block manifold
Body piping

MN4GD1/2 Series

● Cylinder bore size: ø20 to ø80

JIS symbol

● 3-port valve

2-position single NC

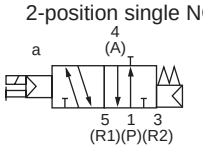

2-position single NO

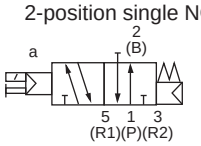

● Two 3-port valves integrated
(A side valve: NC, B side valve: NC)

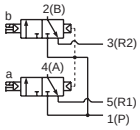

● 5-port valve

2-position single

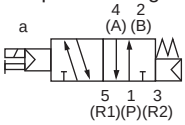

2-position double

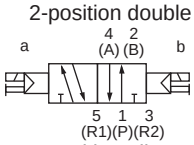

3-position all ports closed

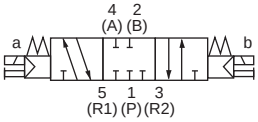

3-position A/B/R connection

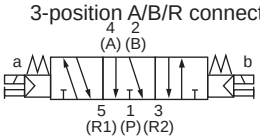

3-position P/A/B connection

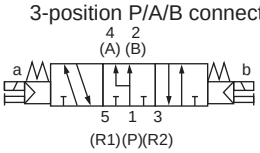

Manifold common specifications

Item		Description
Manifold		Block manifold
Mounting method		DIN rail mount
Supply and exhaust method		Common supply/common exhaust (With internal exhaust check valve)
Pilot exhaust method		Main valve/pilot valve common exhaust (Pilot exhaust check valve built-in)
Piping direction		Valve top direction
Valve and operation		Pilot operated soft spool valve
Working fluid		Compressed air
Max. working pressure	MPa	0.7 (≈100 psi, 7 bar)
Min. working pressure	MPa	0.2 (≈29 psi, 2 bar)
Proof pressure	MPa	1.05 (≈150 psi, 10.5 bar)
Ambient temperature	°C	-5 (23°F) to 55 (131°F) (no freezing)
Fluid temperature	°C	5 (41°F) to 55 (131°F)
Manual override		Non-locking/locking common
Lubrication	(*1)	Not required
Degree of protection	(*2)	Dust-proof
Vibration resistance	m/s^2	50 or less
Shock resistance	m/s^2	300 or less
Atmosphere		Cannot be used in corrosive gas environments

*1: Use turbine oil Class 1 ISO VG32 for lubrication.
Excessive or intermittent lubrication results in unstable operation.

*2: Avoid water drops or oil, etc., during use. IP65 (jet-proof) applies for DIN terminal box specifications. However, the specified outer diameter of the applicable cord and tightening torque must be used for fixing in place.

Electrical specifications

Item	Description			
Rated voltage V	24 DC	12 DC	100 AC	200 AC
Voltage fluctuation range	±10%			
Holding current A (*3)	0.015(0.017)	0.030(0.034)	0.009(0.009)	0.006(0.006)
Power consumption W (*3)	0.35(0.40)		-	
Apparent power VA (*3, *4)	-		0.93(0.98)	1.40
Thermal class	B			
Surge suppressor	Option			
Indicator	Lamp (option)			

*3: Values in ( ) apply when lamp is included. *4: 200 VAC is the value of DIN terminal box (with lamp).

Individual specifications

Item		MN3GD1/MN4GD1	MN3GD2/MN4GD2
Max. station No.		24 stations	20 stations
Port size	A/B port	Push-in fitting ø4, ø6 M5	Push-in fitting ø4, ø6, ø8 Rc1/8
	P/R Port	Push-in fitting ø6, ø8, ø6.4	Push-in fitting ø8, ø10

· For DIN rail mounting, refer to “Mounting orientation” on page 854.
· For weight, refer to page 618.

Performance/characteristics by model

Item			MN3GD1/MN4GD1		MN3GD2/MN4GD2	
			ON	OFF	ON	OFF
Response time ms	Two 3-port valves integrated		12	15	15	30
	2-position	Single	15	25	20	30
		Double	15	-	20	-
	3-position	ABR connection	20	30	25	35

Values with lamp/surge suppressor are shown. The response time is the value with supply pressure of 0.5 MPa at 20°C and without lubrication. It depends on the pressure and the lubricant quality.

Flow characteristics

Model No.	Solenoid position		P → A/B		A/B→R			
			C[dm³/(s·bar)]	b	C[dm³/(s·bar)]		b	
MN3GD1 MN4GD1	Two 3-port valves integrated		0.87	0.37	1.0	(0.68)	0.14	(0.22)
	2-position		0.98	0.33	1.2	(0.71)	0.11	(0.27)
	3-position	All ports closed	0.92	0.34	1.0	-	0.16	-
		ABR connection	0.92	0.29	1.1	(0.69)	0.13	(0.22)
		PAB connection	1.1	0.35	1.1	-	0.17	-
MN3GD2 MN4GD2	Two 3-port valves integrated		1.7	0.37	2.2	(1.6)	0.13	(0.21)
	2-position		2.2	0.21	2.5	(1.7)	0.19	(0.10)
	3-position	All ports closed	2.0	0.25	2.3	-	0.10	-
		ABR connection	2.0	0.27	2.5	(1.7)	0.18	(0.12)
		PAB connection	2.3	0.31	2.3	-	0.16	-

*1: Effective cross-sectional area S and sonic conductance C are converted as S ≈ 5.0 x C.
*2: Values in ( ) are with the exhaust check valve.

Ozone-proof specifications • Coolant proof specifications

Can be selected with “How to order” Item Ⓔ option “A” on page 616.

Specifications for rechargeable battery

(Catalog No. CC-1226A)

● For use in the rechargeable battery manufacturing process, materials used for air path and sliding section are limited

** - Voltage - **P4**

CE marking specifications

** - Voltage - **ST**

• Standard voltage of 24 VDC or less is CE marking-compatible even if the model No. is not indicated with "ST".

How to order

Manifold model No.

MN4GD1 1 0 R- C6 - E2 H - 10 - 3

3-port manifold model No.

MN3GD1 1 0 R- C6 - E2 H - 10 - 3

Discrete valve block with solenoid valve

N4GD1 1 0 R- C6 - E2 H — 3

Discrete 3-port valve block with solenoid valve

N3GD1 1 0 R- C6 - E2 H — 3

Discrete solenoid valve

4GD1 1 9 R- C6 - E2 H — 3

Discrete 3-port solenoid valve

3GD1 1 9 R- C6 - E2 H — 3

Ⓑ Solenoid position

Ⓐ Model No.

Ⓒ Port size (*1)

Ⓓ Electrical connections

Ⓔ Option

Ⓕ Station No.

Ⓖ Voltage

Ⓐ Model No.	Manifold				Discrete valve block with solenoid valve/ discrete solenoid valve			
	3-port valve		5-port valve					
	MN3GD1	MN3GD2	MN4GD1	MN4GD2	(N)3GD1	(N)3GD2	(N)4GD1	(N)4GD2
Ⓑ Solenoid position								
1 2-position single			●	●			●	●
2 2-position double			●	●			●	●
3 3-position all ports closed			●	●			●	●
4 3-position ABR connection			●	●			●	●
5 3-position PAB connection			●	●			●	●
1 2-position single normally closed (*2)	●	●			●	●		
11 2-position single normally open (*2)	●	●			●	●		
66 Two 3-port valves integrated (*2) (*3) A side valve: Normally closed / B side valve: Normally closed	●	●			●	●		
8 Mix manifold (when there are multiple solenoid positions)	●	●	●	●	●	●	●	●
Ⓒ Port size (A/B-port)								
Code								
C4 ø4 push-in fitting	●	●	●	●	●	●	●	●
C6 ø6 push-in fitting	●	●	●	●	●	●	●	●
C8 ø8 push-in fitting		●		●		●		●
CX Push-in fitting mix (*4)	●	●	●	●				
M5 M5	●		●		●		●	
06 Rc1/8		●		●		●		●
Ⓓ Electrical connections								
Refer to the following page for electrical connections								
Ⓔ Option								
Blank Non-locking/locking common manual override	●	●	●	●	●	●	●	●
H With exhaust check valve (*5)	●	●	●	●	●	●	●	●
A Ozone/coolant proof	●	●	●	●	●	●	●	●
F A/B port filter integrated (*6)	●	●	●	●	●	●	●	●
Z1 Air supply spacer (*7)	●	●	●	●				
Z3 Exhaust spacer (*7)	●	●	●	●				
Ⓕ Station No.								
1 1 station	●	●	●	●				
to to								
24 24 stations (Max. station number for MN3GD2/MN4GD2 is 20.)								
Ⓖ Voltage								
1 100 VAC (rectifier integrated)	●	●	●	●	●	●	●	●
2 200 VAC (rectifier integrated) (*8)		●		●		●		●
3 24 VDC	●	●	●	●	●	●	●	●
4 12 VDC		●	●	●	●	●	●	●

is not available.

⚠ Precautions for model selection

*1 Specify the P/R port bore size with the supply and exhaust block model No. in the manifold specifications sheet.

*2 Select MN4GD*80R when mixing with 4, 5-port valves. Further, select MN3GD*80R when mixing with masking plate.

*3 Dimensions are the same as the respective 2-position double solenoid.

*4 The push-in fitting cannot be mixed with the single valve's 4(A) or 2(B) port.

*5 3-position all ports closed and PAB connection are not provided with the exhaust check valve specifications (H). Refer to page 851 for details on the exhaust check valve.

*6 A filter is built into the P-port as standard.

*7 Specify the spacer mounting position/ quantity in manifold specifications sheet.
Stacking of spacers is not possible.
Combination with the masking plate is not supported.
Refer to pages 679 to 682 for details.

*8 DIN terminal box only is supported.
Two 3-port valves integrated is not available.

[Electrical connection list]

Ⓓ Electrical connections		Ⓐ Model No.							
		Manifold				Discrete valve block with solenoid valve/ discrete solenoid valve			
		3-port valve		5-port valve					
		MN3GD1	MN3GD2	MN4GD1	MN4GD2	(N)3GD1	(N)3GD2	(N)4GD1	(N)4GD2
Blank	Grommet lead wire (300 mm) (*9)	●	●	●	●	●	●	●	●
B	DIN terminal box (Pg7) with surge suppressor/lamp (*10) (*12)		●		●		●		●
BN	DIN terminal box (Pg7) (without terminal box) with surge suppressor (*10) (*12)		●		●		●		●
E-connector (upward/lateral direction common)									
E0	Lead wire (300 mm) (*11)	●	●	●	●	●	●	●	●
E00	Lead wire (500 mm) (*11)	●	●	●	●	●	●	●	●
E01	Lead wire (1000 mm) (*11)	●	●	●	●	●	●	●	●
E02	Lead wire (2000 mm) (*11)	●	●	●	●	●	●	●	●
E03	Lead wire (3000 mm) (*11)	●	●	●	●	●	●	●	●
E0N	Without lead wire (without socket) (*11)	●	●	●	●	●	●	●	●
E1	Without lead wire (with socket/terminal) (*11)	●	●	●	●	●	●	●	●
E2	Lead wire (300 mm), surge suppressor/indicator lamp	●	●	●	●	●	●	●	●
E20	Lead wire (500 mm), surge suppressor/indicator lamp	●	●	●	●	●	●	●	●
E21	Lead wire (1000 mm), surge suppressor/indicator lamp	●	●	●	●	●	●	●	●
E22	Lead wire (2000 mm), surge suppressor/indicator lamp	●	●	●	●	●	●	●	●
E23	Lead wire (3000 mm), surge suppressor/indicator lamp	●	●	●	●	●	●	●	●
E2N	No lead wire (without socket), surge suppressor/indicator lamp	●	●	●	●	●	●	●	●
E3	No lead wire (with socket/terminal), surge suppressor/indicator lamp	●	●	●	●	●	●	●	●
EJ type connector (socket with cover, upward/lateral direction common)									
E01J	Lead wire (1000 mm) (*11)	●	●	●	●	●	●	●	●
E02J	Lead wire (2000 mm) (*11)	●	●	●	●	●	●	●	●
E03J	Lead wire (3000 mm) (*11)	●	●	●	●	●	●	●	●
E21J	Lead wire (1000 mm), surge suppressor/indicator lamp	●	●	●	●	●	●	●	●
E22J	Lead wire (2000 mm), surge suppressor/indicator lamp	●	●	●	●	●	●	●	●
E23J	Lead wire (3000 mm), surge suppressor/indicator lamp	●	●	●	●	●	●	●	●

*9 The grommet lead wire specifications are compatible with DC voltage only.
*10 A lamp comes with the terminal box.
*11 AC voltage is with a rectifier circuit.
*12 The terminal box conforms to EN175301-803 Type C (former DIN 43650-C).
Refer to pages 856 and 857 for details.

Electrical connections

Discrete valve/individual wiring manifold

Blank Grommet lead wire

E1 E3 E-connector with socket/terminal

● **Lead wire length**
300 mm

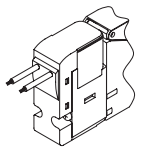

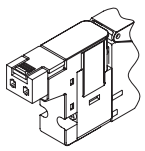

E0 E2 E-connector

B DIN terminal box

● **Lead wire length**
300 mm
500 mm
1000 mm
2000 mm
3000 mm

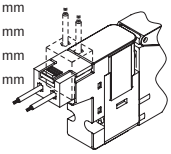

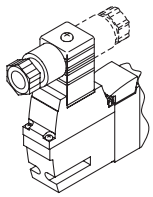

E0N E2N E-connector without socket

BN DIN terminal box without terminal box

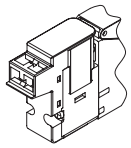

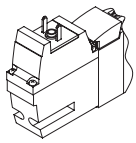

E0*J E2*J EJ type connector

● **Lead wire length**
1 m
2 m
3 m

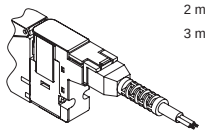

Manifold components explanation and parts list

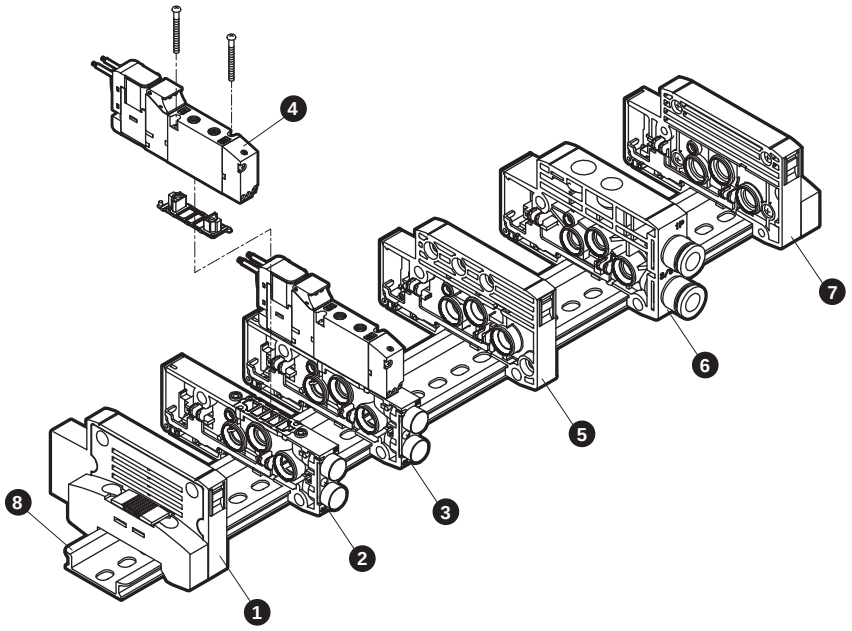

List of main components (refer to pages 668 to 682 for details)

No.	Component name	Model No. (example)	No.	Component name	Model No. (example)
1	End block L	N4G1R-EL	5	Partition block	N4G1R-S
2	Discrete valve block	N4GA1R-V1	6	Supply and exhaust block	N4G1R-Q-8
3	Discrete valve block with solenoid valve	N4GD110R-M5-H-3	7	End block R	N4G1R-ER
4	Solenoid valve body	4GD119R-M5-H-3	8	DIN rail	N4GR-BAA (Length)

D type individual wiring weight

4GD1

(g)

Part name	Model No.	Weight	Part name	Model No.	Weight
Valve block with solenoid valve	N3GD110R-C6-3	70	Supply and exhaust block	N4G1R-Q-8	58
	N3GD1110R-C6-3	70	End block	N4G1R-E*	60
	N4GD110R-C6-3	70		N4G1R-EX*	60
	N4GD120R-C6-3	87	Partition block	N4G1R-S	45
	N4GD1$^{3}_{4}_{5}$0R-C6-3	89	Valve block	N4GA1R-V1	28
	N3GD1660R-C6-3	87	DIN rail	N4GR-BAA (Length)	0.19/mm
Valve block with masking plate	N4GA1R-MP	34			

4GD2

(g)

Part name	Model No.	Weight	Part name	Model No.	Weight
Valve block with solenoid valve	N3GD210R-C8-3	135	Supply and exhaust block	N4G2R-Q-10	83
	N3GD2110R-C8-3	135	End block	N4G2R-E*	84
	N4GD210R-C8-3	135		N4G2R-EX*	85
	N4GD220R-C8-3	154	Partition block	N4G2R-S	60
	N4GD2$^{3}_{4}_{5}$0R-C8-3	166	Valve block	N4GA2R-V2	53
	N3GD2660R-C8-3	154	DIN rail	N4GR-BAA (Length)	0.19/mm
Valve block with masking plate	N4GA2R-MP	66			

Parts list

Applicable	Part name	Model No.
Valve 4G1	Cartridge fitting ø4 straight	4G1R-JOINT-C4
	Cartridge fitting ø6 straight	4G1R-JOINT-C6
	Plug cartridge	4G1R-JOINT-CPG
Valve 4G2	Cartridge fitting ø4 straight	4G2R-JOINT-C4
	Cartridge fitting ø6 straight	4G2R-JOINT-C6
	Cartridge fitting ø8 straight	4G2R-JOINT-C8
	Plug cartridge	4G2R-JOINT-CPG

Applicable	Part name	Model No.
Common	Coil assembly	4GR-[*1]-[*2]-COIL-[*3] *1: Electrical connections (blank, B, E0, ...), *3: Voltage (1, 2, 3, 4) *2: Ozone/coolant proof (blank, A)
	E-connector socket assembly	4GR-SOCKET-ASSY-[*1]-[*3] *1: Electrical connections (E0,E00,…), *3: Voltage (1, 3, 4)
	EJ type connector socket assembly	4GR-SOCKET-ASSY-[*1] *1: Electrical connections (E01J, E02J,...)
Valve 4G2	DIN terminal box assembly	4GR-TERMINAL-BOX-[*3] *3: Voltage (1, 2, 3, 4)

Dimensions CAD

MN4GD1

● Grommet lead wire (blank)

* For the 2-position single 3-port valve, either A port or B port is a plug.
In addition, the two 3-port valve integrated has the same dimensions as the double model.

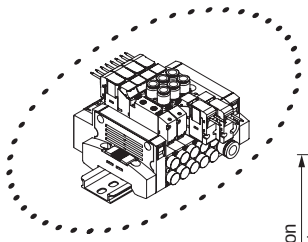

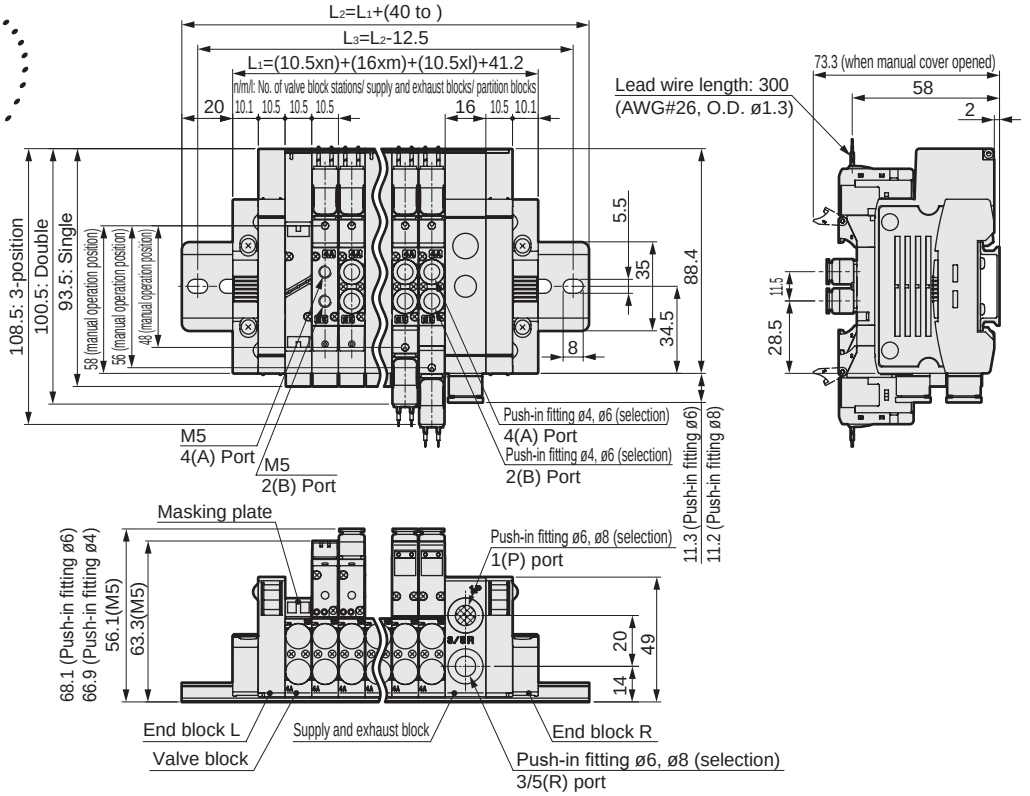

● E-connector (E)

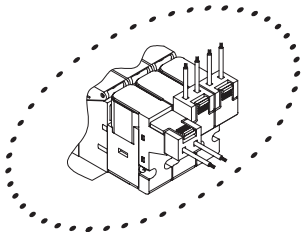

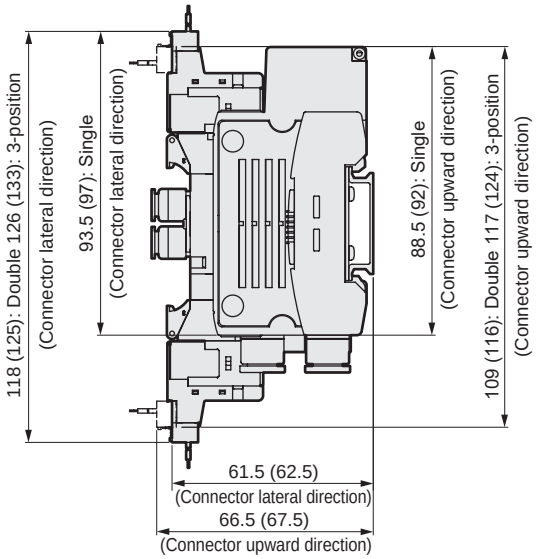

Note: Values in ( ) are for AC voltage.

* Refer to page 660 for dimensions of the supply and exhaust block push-in fitting.

● EJ type connector (E**J)

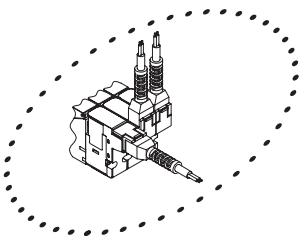

Note: Values in ( ) are for AC voltage.

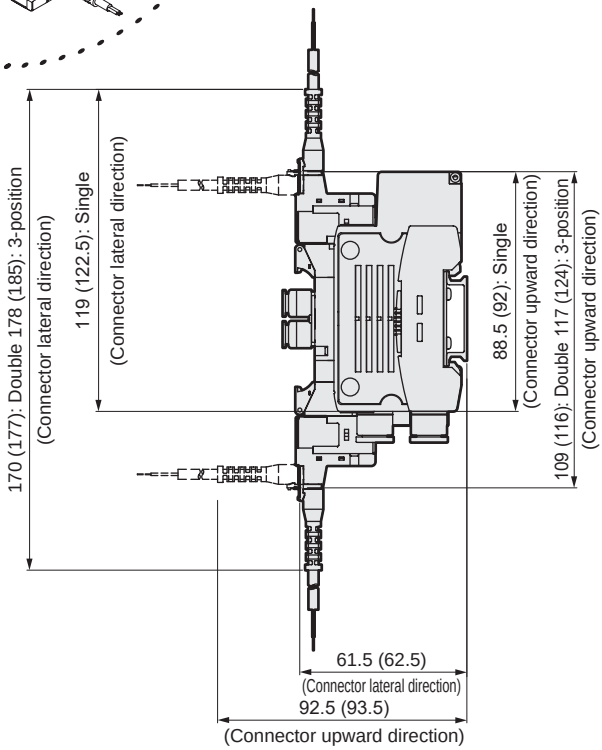

Dimensions CAD

MN4GD2

● Grommet lead wire (blank)

* For the 2-position single 3-port valve, either A port or B port is a plug. In addition, the two 3-port valve integrated has the same dimensions as the double model.

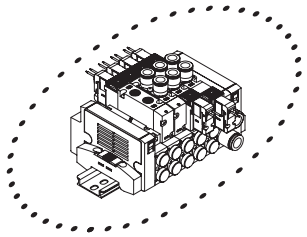

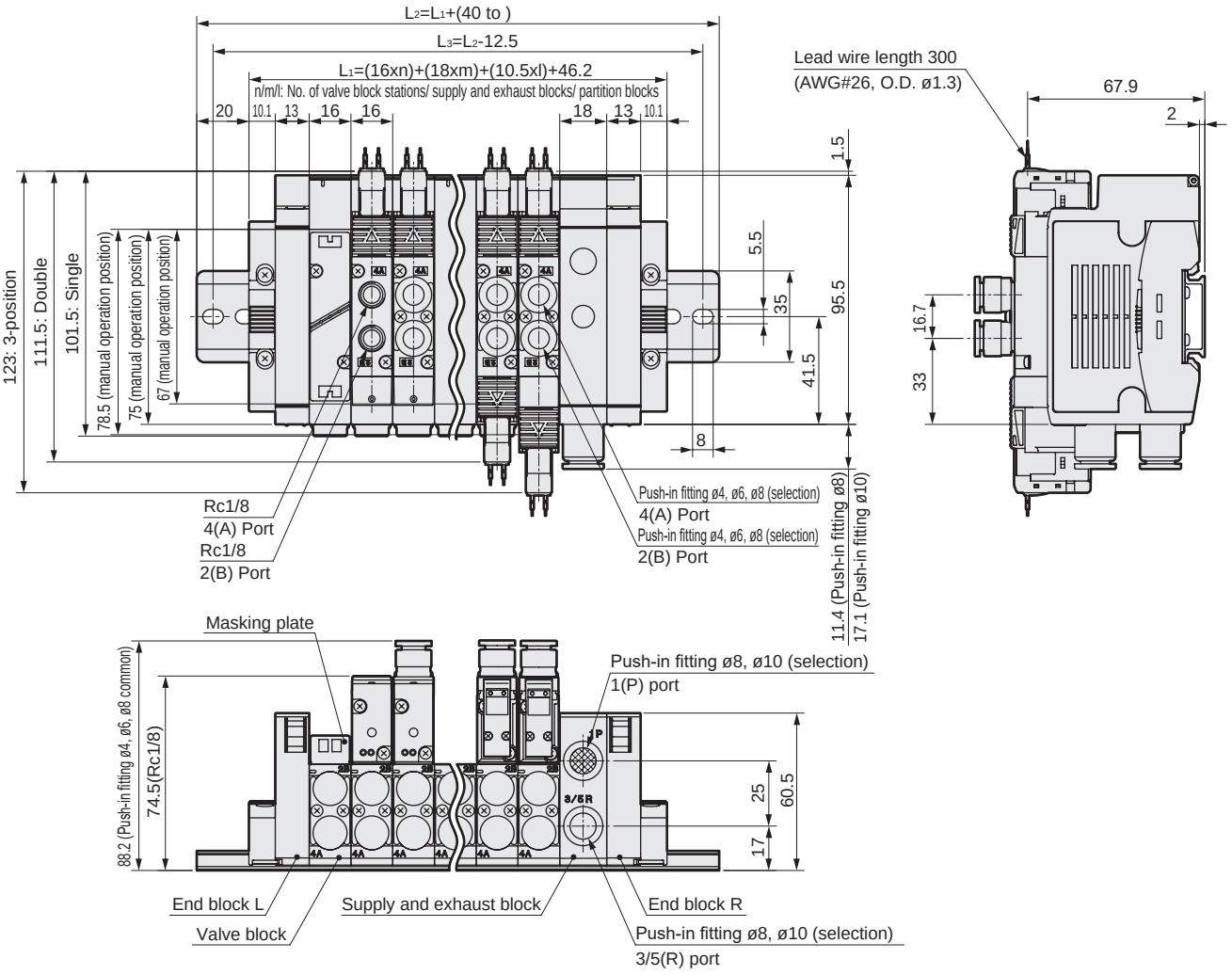

Dimensions

● E-connector (E)

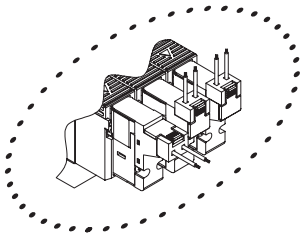

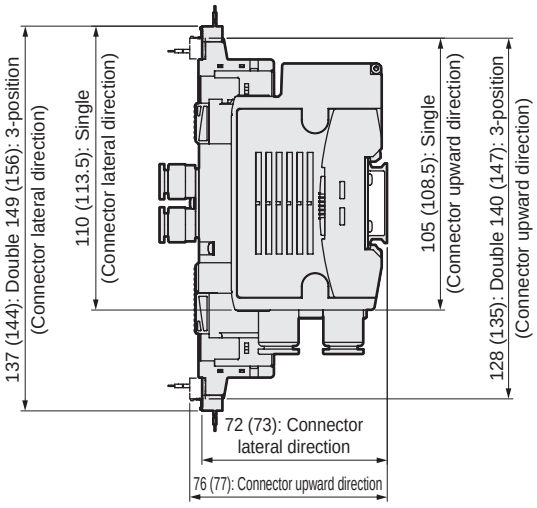

Note: Values in ( ) are for AC voltage.

● EJ type connector (E**J)

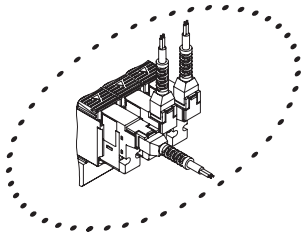

Note: Values in ( ) are for AC voltage.

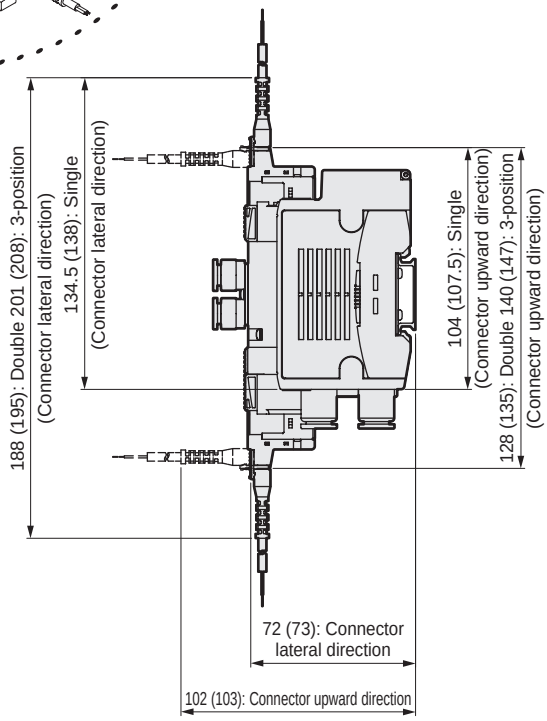

● DIN terminal box (B)

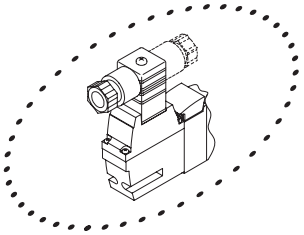

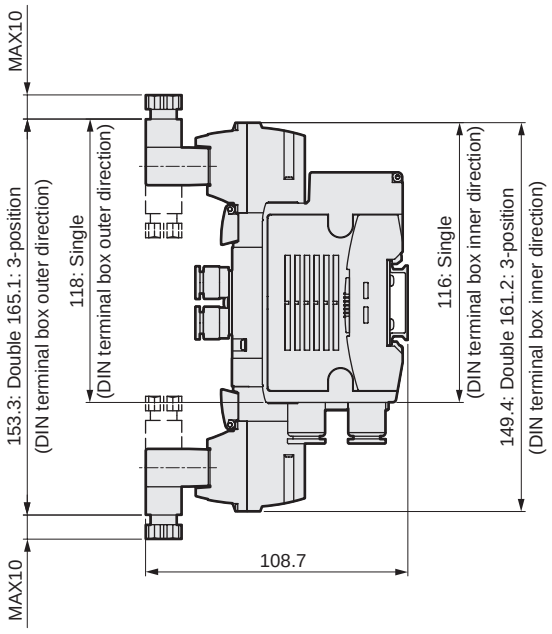

Note: DIN terminal box assembly is shipped facing inward.

* Refer to page 660 for dimensions of the supply and exhaust block push-in fitting.

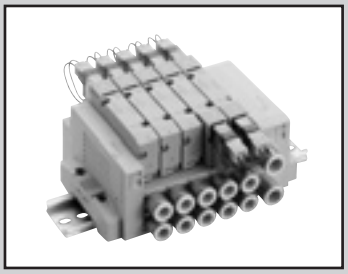

Individual wiring block manifold
Base piping

MN4GE1/2 Series

● Cylinder bore size: ø20 to ø80

JIS symbol

● Two 3-port valves integrated
(A side valve: NC, B side valve: NC)

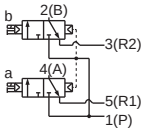

● 5-port valve

2-position single

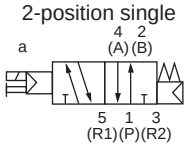

2-position double

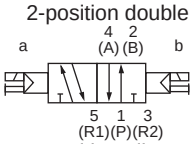

3-position all ports closed

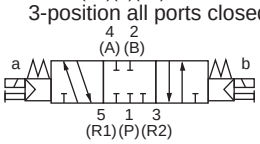

3-position A/B/R connection

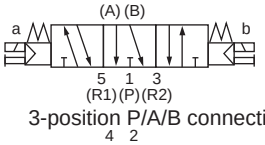

3-position P/A/B connection

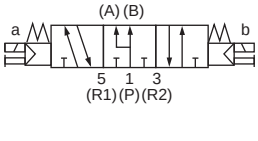

Manifold common specifications

Item	Description
Manifold	Block manifold
Mounting method	DIN rail mount
Supply and exhaust method	Common supply/common exhaust (With internal exhaust check valve)
Pilot exhaust method	Main valve/pilot valve common exhaust (Pilot exhaust check valve built-in)
Piping direction	Lateral direction from base
Valve and operation	Pilot operated soft spool valve
Working fluid	Compressed air
Max. working pressure MPa	0.7 (≈100 psi, 7 bar)
Min. working pressure MPa	0.2 (≈29 psi, 2 bar)
Proof pressure MPa	1.05 (≈150 psi, 10.5 bar)
Ambient temperature °C	-5 (23°F) to 55 (131°F) (no freezing)
Fluid temperature °C	5 (41°F) to 55 (131°F)
Manual override	Non-locking/locking common type
Lubrication (*1)	Not required
Degree of protection (*2)	Dust-proof
Vibration resistance m/s^2	50 or less
Shock resistance m/s^2	300 or less
Atmosphere	Cannot be used in corrosive gas environments

*1 Use turbine oil Class 1 ISO VG32 for lubrication.
Excessive or intermittent lubrication results in unstable operation.
*2 Avoid dripping water or oil, etc., during use. IP65 (jet-proof) applies for DIN terminal box specifications. However, the specified outer diameter of the applicable cord and tightening torque must be used for fixing in place.

Electrical specifications

Item	Description			
Rated voltage V	24 DC	12 DC	100 AC	200 AC
Voltage fluctuation range	±10%			
Holding current A (*3)	0.015(0.017)	0.030(0.034)	0.009(0.009)	0.006(0.006)
Power consumption W (*3)	0.35(0.40)		-	
Apparent power VA (*3, 4)	-		0.93(0.98)	1.40
Thermal class	B			
Surge suppressor	Option			
Indicator	Lamp (option)			

*3: Values in ( ) apply when lamp is included.
*4: 200 VAC is the value of DIN terminal box (with lamp).

Individual specifications

Item		MN3GE1/MN4GE1	MN3GE2/MN4GE2
Max. station No.		24 stations	20 stations
Port size	A/B port	Push-in fitting ø4, ø6	Push-in fitting ø4, ø6, ø8
	P/R Port	Push-in fitting ø6, ø8	Push-in fitting ø8, ø10

· For DIN rail mounting, refer to “Mounting orientation” on page 854.
· For weight, refer to page 626.

Performance/characteristics by model

Item			MN3GE1/MN4GE1		MN3GE2/MN4GE2	
			ON	OFF	ON	OFF
Response time ms	Two 3-port valves integrated		12	15	15	30
	2-position	Single	15	25	20	30
		Double	15	-	20	-
	3-position	ABR connection	20	30	25	35

Values with lamp/surge suppressor are shown. The response time is the value with supply pressure of 0.5 MPa at 20°C and without lubrication. It depends on the pressure and the lubricant quality.

Flow characteristics

Model No.	Solenoid position		P → A/B		A/B→R			
			C[dm³/(s·bar)]	b	C[dm³/(s·bar)]		b	
MN3GE1 MN4GE1	Two 3-port valves integrated		0.86	0.35	1.0	(0.66)	0.15	(0.25)
	2-position		1.0	0.30	1.1	(0.72)	0.11	(0.26)
	3-position	All ports closed	0.96	0.32	1.0	-	0.14	-
		ABR connection	0.96	0.29	1.2	(0.71)	0.11	(0.30)
		PAB connection	1.1	0.31	1.0	-	0.15	-
MN3GE2 MN4GE2	Two 3-port valves integrated		1.7	0.42	2.2	(1.6)	0.15	(0.19)
	2-position		2.4	0.35	2.5	(1.7)	0.19	(0.19)
	3-position	All ports closed	2.2	0.38	2.3	-	0.17	-
		ABR connection	2.2	0.38	2.5	(1.7)	0.18	(0.20)
		PAB connection	2.3	0.29	2.3	-	0.15	-

*1: Formula to calculate sonic conductance C from effective cross-sectional area S is S≈5.0xC.
*2: Values in ( ) are with the exhaust check valve.

Ozone-proof specifications • Coolant proof specifications

Can be selected with "How to order" Item Ⓔ option "A" on page 624.

Specifications for rechargeable battery

(Catalog No. CC-1226A)

● For use in the rechargeable battery manufacturing process, materials used for air path and sliding section are limited

** - Voltage - **P4**

CE marking specifications

** - Voltage - **ST**

・ Standard voltage of 24 VDC or less is CE marking-compatible even if the model No. is not indicated with "ST".

How to order

Manifold model No.

MN4GE1 1 0 R - C6 - E2 H - 10 - 3

3-port manifold model No.

MN3GE1 66 0 R - C6 - E2 H - 10 - 3

Discrete valve block with solenoid valve

N4GE1 1 0 R - C6 - E2 H — 3

Discrete 3-port valve block with solenoid valve

N3GE1 66 0 R - C6 - E2 H — 3

Discrete solenoid valve

4GE1 1 9 R - 00 - E2 H — 3

Discrete 3-port solenoid valve

3GE1 66 9 R - 00 - E2 H — 3

- A Model No.
- B Solenoid position
- C Port size (*1) (*2) (*3) (*4)
- D Electrical connections
- E Option
- F Station No.
- G Voltage

Precautions for model selection

*1 A and B port plug specifications are available for the 2-position single only. Specify the P/R port bore size with the supply and exhaust block model No. in the manifold specifications sheet.

2 CL push-in L fitting (upward) is compatible only with the single solenoid manifold. Long elbow is for A port and short elbow for B port.

*3 A and B ports are the same size for push-in L fitting mix (CX).

*4 For a discrete solenoid valve, select “00” for Port size.

*5 Select MN4GE*80R when mixing with 4, 5-port valves. Further, select MN3GE*80R when mixing with masking plate.

*6 Dimensions are the same as the respective 2-position double solenoid.

*7 The push-in fitting cannot be mixed with the discrete valve’s 4(A) or 2(B) port.

*8 3-position all ports closed and PAB connection are not provided with the exhaust check valve specifications (H). Refer to page 851 for details on the exhaust check valve.

*9 A filter is built into the P-port as standard.

*10 Specify the spacer mounting position/ quantity in manifold specifications sheet. Stacking of spacers is not possible. Combination with the masking plate is not supported. Only single solenoid can be selected together with push-in L fitting (upward). Refer to pages 679 to 682 for details.

*11 DIN terminal box only is supported. Two 3-port valves integrated is not available.

A Model No.								
		Manifold				Discrete valve block with solenoid valve Discrete solenoid valve			
		Two 3-port valves integrated		5-port valve					
		MN3GE1	MN3GE2	MN4GE1	MN4GE2	(N)3GE1	(N)3GE2	(N)4GE1	(N)4GE2
B Solenoid position									
1	2-position single			●	●			●	●
2	2-position double			●	●			●	●
3	3-position all ports closed			●	●			●	●
4	3-position ABR connection			●	●			●	●
5	3-position PAB connection			●	●			●	●
66	Two 3-port valves integrated (*5) (*6) — A side valve: Normally closed / B side valve: Normally closed	●	●			●	●		
8	Mix manifold (when there are multiple solenoid positions)	●	●	●	●	●	●	●	●
C Port size (A/B-port)									
Code									
C4	ø4 push-in fitting	●	●	●	●	●	●	●	●
C6	ø6 push-in fitting	●	●	●	●	●	●	●	●
C8	ø8 push-in fitting		●		●		●		●
CL4	ø4 push-in L-fitting (upward)	●		●		●		●	
CL6	ø6 push-in L-fitting (upward)	●	●	●	●	●	●	●	●
CL8	ø8 push-in L-fitting (upward)		●		●		●		●
CD4	ø4 push-in L-fitting (downward)	●		●		●		●	
CD6	ø6 push-in L-fitting (downward)	●	●	●	●	●	●	●	●
CD8	ø8 push-in L-fitting (downward)		●		●		●		●
CX	Push-in fitting mix (*7)	●	●	●	●				
Single, plug specs	A port	B port							
C4NC	ø4 push-in fitting	Plug		●	●			●	●
C6NC	ø6 push-in fitting	Plug		●	●			●	●
C8NC	ø8 push-in fitting	Plug			●				●
C4NO	Plug	ø4 push-in fitting		●	●			●	●
C6NO	Plug	ø6 push-in fitting		●	●			●	●
C8NO	Plug	ø8 push-in fitting			●				●
CL4NC	ø4 push-in L-fitting (upward)	Plug		●				●	
CL6NC	ø6 push-in L-fitting (upward)	Plug		●	●			●	●
CL8NC	ø8 push-in L-fitting (upward)	Plug			●				●
CL4NO	Plug	ø4 push-in L-fitting (upward)		●				●	
CL6NO	Plug	ø6 push-in L-fitting (upward)		●	●			●	●
CL8NO	Plug	ø8 push-in L-fitting (upward)			●				●
CD4NC	Radial ø4 push-in (downward)	Plug		●				●	
CD6NC	Radial ø6 push-in (downward)	Plug		●	●			●	●
CD8NC	Radial ø8 push-in (downward)	Plug			●				●
CD4NO	Plug	Radial ø4 push-in (downward)		●				●	
CD6NO	Plug	Radial ø6 push-in (downward)		●	●			●	●
CD8NO	Plug	Radial ø8 push-in (downward)			●				●
00	Discrete valve for mounting base					●	●	●	●
D Electrical connections									
Refer to the following page for electrical connections									
E Option									
Blank	Non-locking/locking common manual override	●	●	●	●	●	●	●	●
H	With exhaust check valve (*8)	●	●	●	●	●	●	●	●
A	Ozone/coolant proof	●	●	●	●	●	●	●	●
F	A/B port filter integrated (*9)	●	●	●	●	●	●	●	●
Z1	Air supply spacer (*10)	●	●	●	●				
Z3	Exhaust spacer (*10)	●	●	●	●				
F Station No.									
1	1 station	●	●	●	●				
to	to								
24	24 stations (Max. station number for MN4GE2 is 20.)								
G Voltage									
1	100 VAC (rectifier integrated)	●	●	●	●	●	●	●	●
2	200 VAC (rectifier integrated) (*11)		●		●		●		●
3	24 VDC	●	●	●	●	●	●	●	●
4	12 VDC	●	●	●	●	●	●	●	●

[Electrical connection list]

Ⓓ Electrical connections			Ⓐ Model No.							
			Manifold				Discrete valve block with solenoid valve			
			Two 3-port valves integrated		5-port valve		Discrete solenoid valve			
			MN3GE1	MN3GE2	MN4GE1	MN4GE2	(N)3GE1	(N)3GE2	(N)4GE1	(N)4GE2
Blank	Grommet lead wire (300 mm)	(*12)	●	●	●	●	●	●	●	●
B	DIN terminal box (Pg7) with surge suppressor/lamp (*13) (*15)			●		●		●		●
BN	DIN term. box (Pg7) (no terminal box) + surge suppressor (*13) (*15)			●		●		●		●
E-connector (upward/lateral direction common)										
E0	Lead wire (300 mm)	(*14)	●	●	●	●	●	●	●	●
E00	Lead wire (500 mm)	(*14)	●	●	●	●	●	●	●	●
E01	Lead wire (1000 mm)	(*14)	●	●	●	●	●	●	●	●
E02	Lead wire (2000 mm)	(*14)	●	●	●	●	●	●	●	●
E03	Lead wire (3000 mm)	(*14)	●	●	●	●	●	●	●	●
E0N	Without lead wire (without socket)	(*14)	●	●	●	●	●	●	●	●
E1	Without lead wire (with socket/terminal)	(*14)	●	●	●	●	●	●	●	●
E2	Lead wire (300 mm), surge suppressor/indicator lamp		●	●	●	●	●	●	●	●
E20	Lead wire (500 mm), surge suppressor/indicator lamp		●	●	●	●	●	●	●	●
E21	Lead wire (1000 mm), surge suppressor/indicator lamp		●	●	●	●	●	●	●	●
E22	Lead wire (2000 mm), surge suppressor/indicator lamp		●	●	●	●	●	●	●	●
E23	Lead wire (3000 mm), surge suppressor/indicator lamp		●	●	●	●	●	●	●	●
E2N	No lead wire (without socket), surge suppressor/indicator lamp		●	●	●	●	●	●	●	●
E3	No lead wire (with socket/terminal), surge suppressor/indicator lamp		●	●	●	●	●	●	●	●
EJ type connector (socket with cover, upward/lateral direction common)										
E01J	Lead wire (1000 mm)	(*14)	●	●	●	●	●	●	●	●
E02J	Lead wire (2000 mm)	(*14)	●	●	●	●	●	●	●	●
E03J	Lead wire (3000 mm)	(*14)	●	●	●	●	●	●	●	●
E21J	Lead wire (1000 mm), surge suppressor/indicator lamp		●	●	●	●	●	●	●	●
E22J	Lead wire (2000 mm), surge suppressor/indicator lamp		●	●	●	●	●	●	●	●
E23J	Lead wire (3000 mm), surge suppressor/indicator lamp		●	●	●	●	●	●	●	●

*12 The grommet lead wire specifications are compatible with DC voltage only.
*13 A lamp comes with the terminal box.
*14 AC voltage is with a rectifier circuit.
*15 The terminal box conforms to EN175301-803 Type C (former DIN 43650-C).
Refer to pages 856 and 857 for details.

Electrical connections

Discrete valve/individual wiring manifold

Blank Grommet lead wire

● **Lead wire length**
300 mm

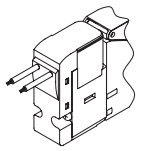

E1 E3 E-connector with socket/terminal

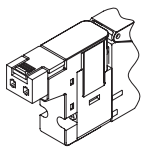

E0 E2 E-connector

● **Lead wire length**
300 mm
500 mm
1000 mm
2000 mm
3000 mm

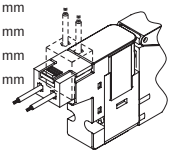

B DIN terminal box

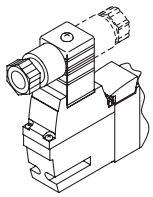

E0N E2N E-connector without socket

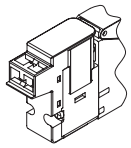

BN DIN terminal box without terminal box

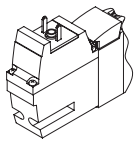

E0*J E2*J EJ type connector

● **Lead wire length**
1 m
2 m
3 m

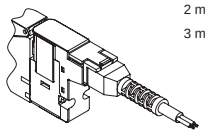

Manifold components explanation and parts list

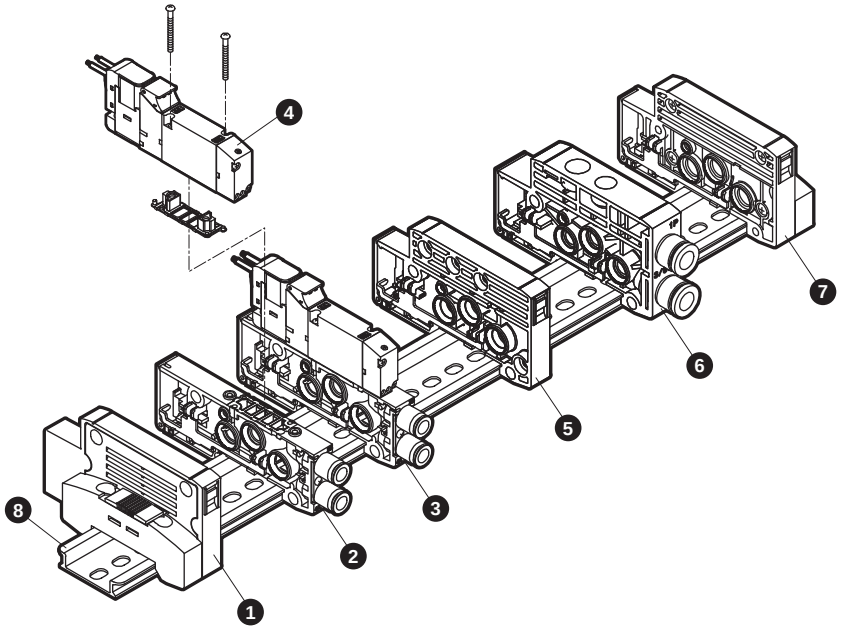

List of main components (refer to pages 668 to 682 for details)

No.	Component name	Model No. (example)	No.	Component name	Model No. (example)
1	End block L	N4G1R-EL	5	Partition block	N4G1R-S
2	Discrete valve block	N4GB1R-V1-C6	6	Supply and exhaust block	N4G1R-Q-8
3	Discrete valve block with solenoid valve	N4GE110R-C6-H-3	7	End block R	N4G1R-ER
4	Solenoid valve body	4GE119R-00-H-3	8	DIN rail	N4GR-BAA (Length)

E type individual wiring weight

4GE1

(g)

Part name	Model No.	Weight	Part name	Model No.	Weight
Valve block with solenoid valve	N4GE110R-C6-3	68	Supply and exhaust block	N4G1R-Q-8	58
	N4GE120R-C6-3	84	End block	N4G1R-E*	60
	N4GE1$\frac{3}{5}$0R-C6-3	85	Partition block	N4G1R-S	45
	N3GE1660R-C6-3	84	Valve block	N4GB1R-V1-C*	33
Valve block with masking plate	N4GB1R-MP-C6	37	DIN rail	N4GR-BAA (Length)	0.19/mm

4GE2

(g)

Part name	Model No.	Weight	Part name	Model No.	Weight
Valve block with solenoid valve	N4GE210R-C8-3	132	Supply and exhaust block	N4G2R-Q-10	83
	N4GE220R-C8-3	147	End block	N4G2R-E*	84
	N4GE2$\frac{3}{5}$0R-C8-3	158		N4G2R-EX*	85
	N3GE2660R-C8-3	147	Partition block	N4G2R-S	60
Valve block with masking plate	N4GB2R-MP-C8	69	Valve block	N4GB2R-V1-C*	53
			DIN rail	N4GR-BAA (Length)	0.19/mm

Parts list

Applicable	Part name	Model No.	Applicable	Part name	Model No.
Valve 4G1	Cartridge fitting ø4 straight	4G1R-JOINT-C4	Common	Coil assembly	4GR-[*1]-[*2]-COIL-[*3] *1: Electrical connections (blank, B, E0, ...), *3: Voltage (1, 2, 3, 4) *2: Ozone/coolant proof (blank, A)
	Cartridge fitting ø6 straight	4G1R-JOINT-C6			
	Cartridge fitting ø4 (short) elbow	4G1R-JOINT-CL4			
	Cartridge fitting ø4 long elbow	4G1R-JOINT-CLL4		E-connector socket assembly	4GR-SOCKET-ASSY-[*1]-[*3] *1: Electrical connections (E0,E00,...), *3: Voltage (1, 3, 4)
	Cartridge fitting ø6 (short) elbow	4G1R-JOINT-CL6			
	Cartridge fitting ø6 long elbow	4G1R-JOINT-CLL6		EJ type connector socket assembly	4GR-SOCKET-ASSY-[*1] *1: Electrical connections (E01J, E02J,...)
	Plug cartridge	4G1R-JOINT-CPG			
Valve 4G2R	Cartridge fitting ø4 straight	4G2R-JOINT-C4	Valve 4G2R	DIN terminal box assembly	4GR-TERMINAL-BOX-[*3] *3: Voltage (1, 2, 3, 4)
	Cartridge fitting ø6 straight	4G2R-JOINT-C6			
	Cartridge fitting ø8 straight	4G2R-JOINT-C8			
	Cartridge fitting ø6 (short) elbow	4G2R-JOINT-CL6			
	Cartridge fitting ø6 long elbow	4G2R-JOINT-CLL6			
	Cartridge fitting ø8 (short) elbow	4G2R-JOINT-CL8			
	Cartridge fitting ø8 long elbow	4G2R-JOINT-CLL8			
	Plug cartridge	4G2R-JOINT-CPG			

Dimensions CAD

MN4GE1

● Grommet lead wire (blank)

* For the 2-position single 3-port valve, either A port or B port is a plug. In addition, the two 3-port valve integrated has the same dimensions as the double model.

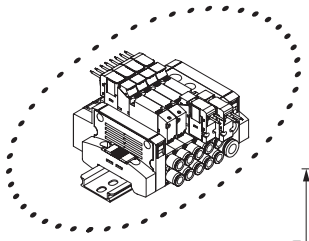

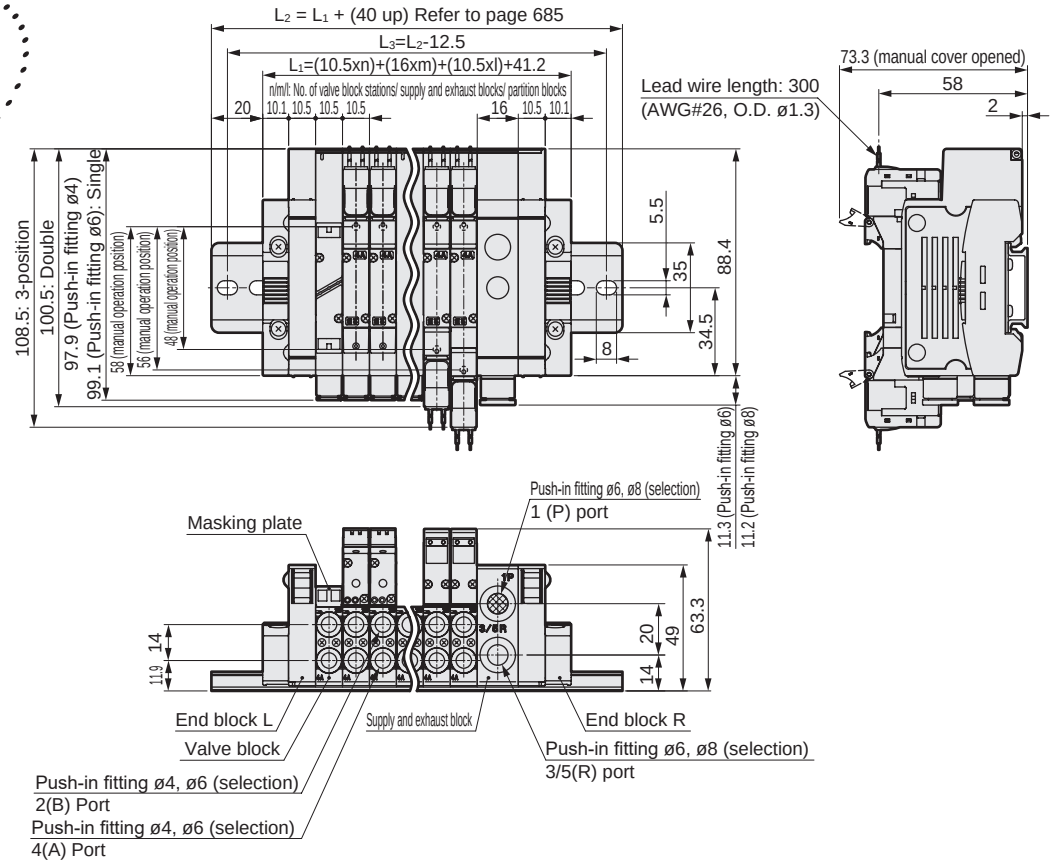

● E-connector (E)

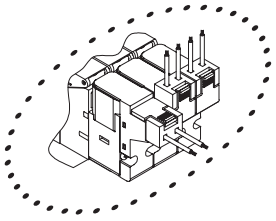

● EJ type connector (E**J)

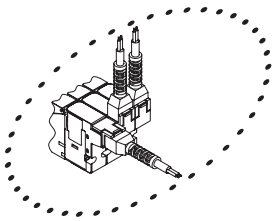

Note: Values in ( ) are for AC voltage.

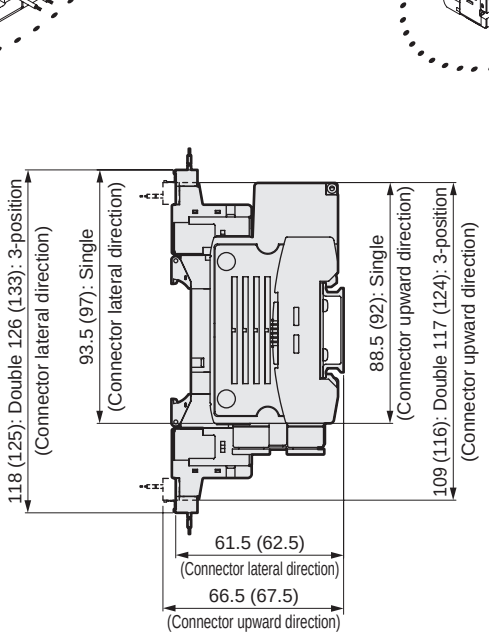

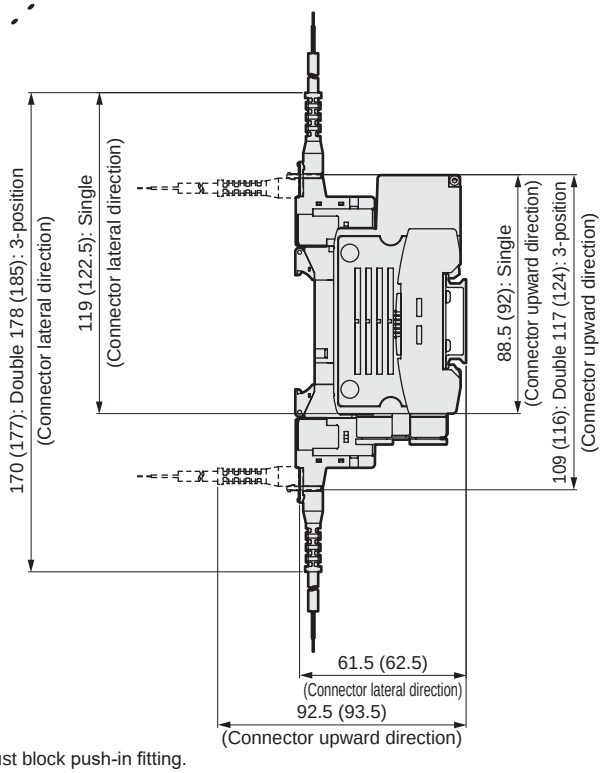

* Refer to page 660 for dimensions of the valve block push-in fitting and supply and exhaust block push-in fitting.

Dimensions CAD

MN4GE2

● Grommet lead wire (blank)

* For the 2-position single 3-port valve, either A port or B port is a plug. In addition, the two 3-port valve integrated has the same dimensions as the double model.

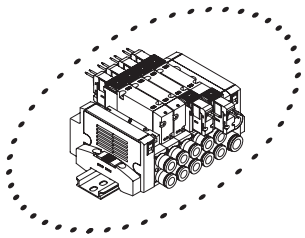

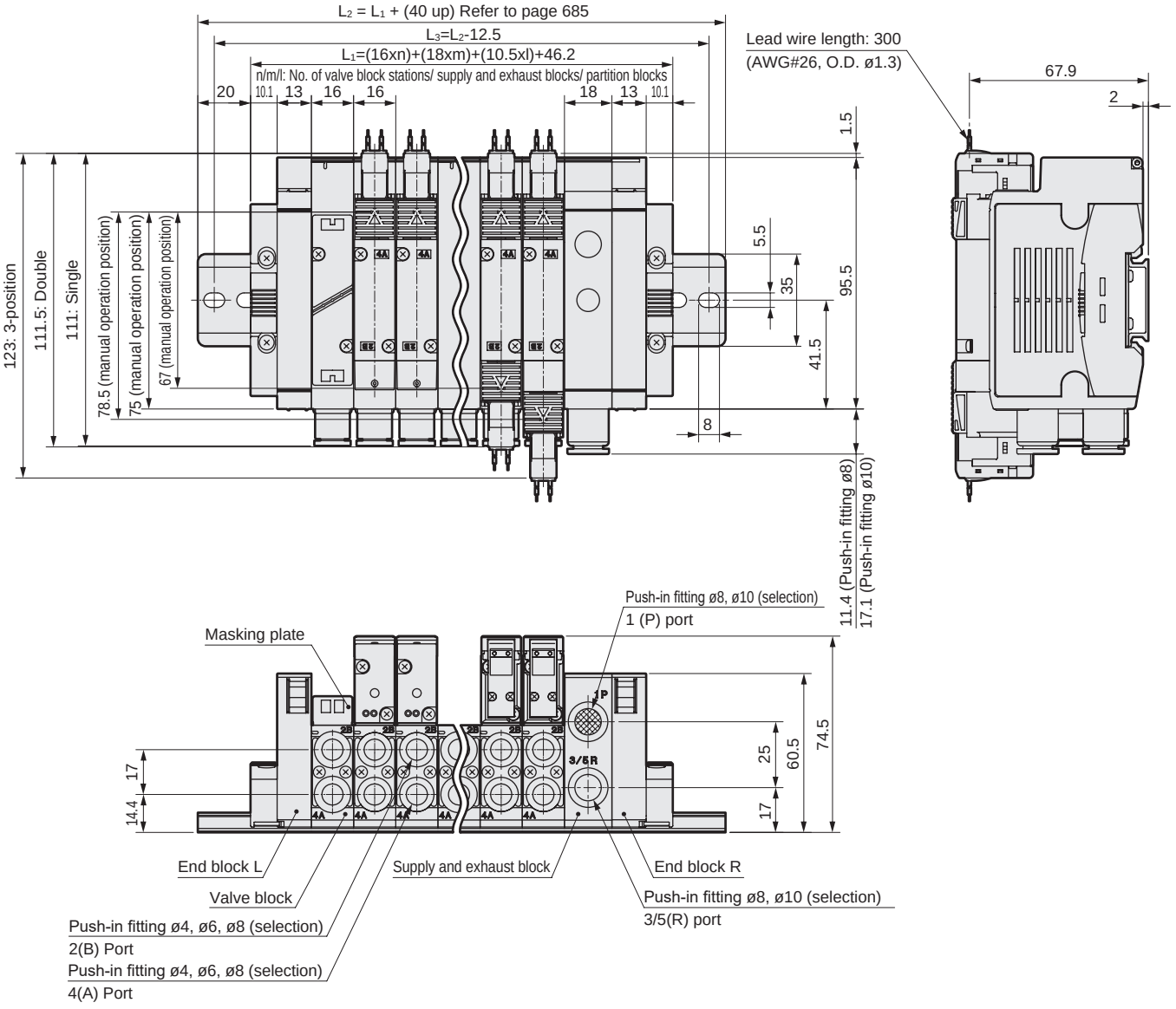

* Refer to page 660 for dimensions of the valve block push-in fitting and supply and exhaust block push-in fitting.

Dimensions

● E-connector (E)

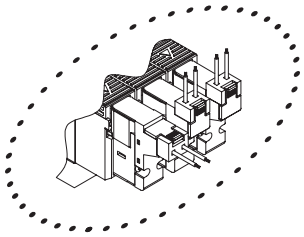

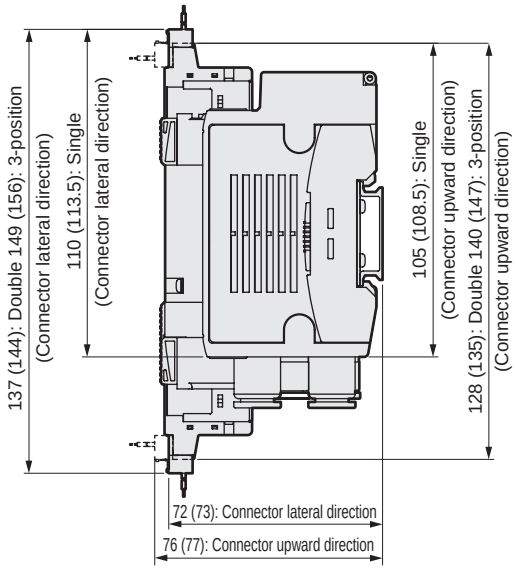

Note: Values in ( ) are for AC voltage.

● EJ type connector (E**J)

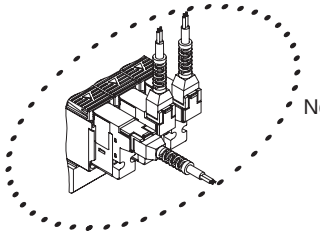

Note: Values in ( ) are for AC voltage.

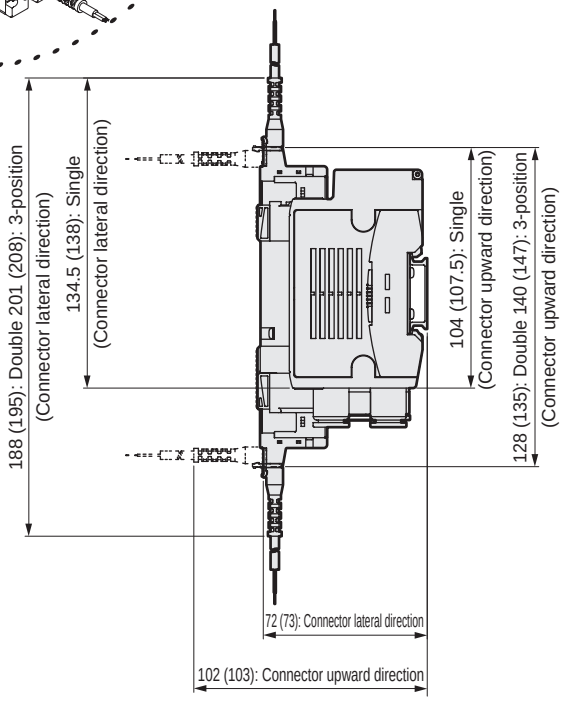

● DIN terminal box (B)

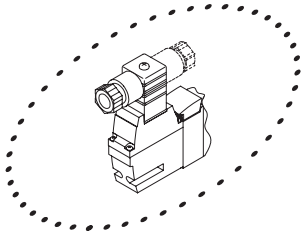

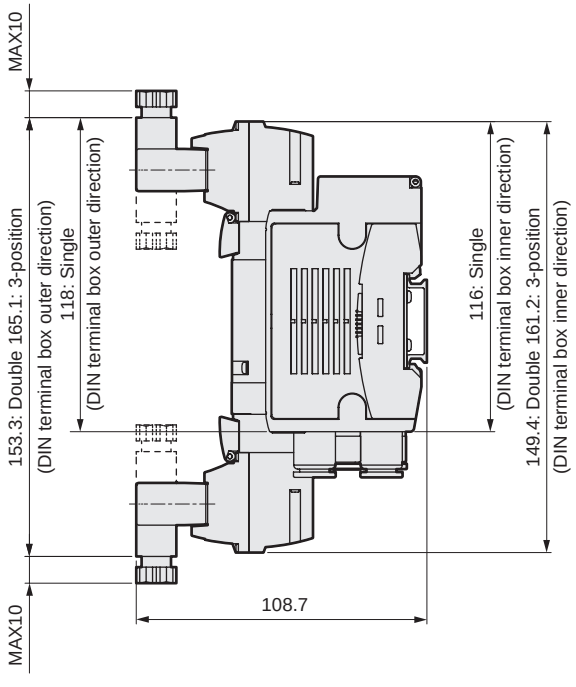

Note: DIN terminal box assembly is shipped facing inward.

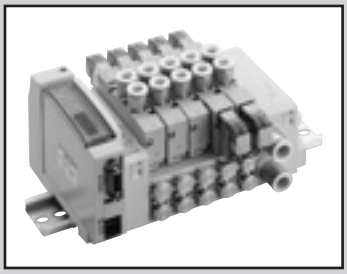

Reduced wiring block manifold
Body piping

MN4GD1/2-T* Series

● Cylinder bore size: ø20 to ø80

RoHS CAD

JIS symbol

● 3-port valve
2-position single NC

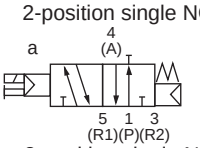

2-position single NO

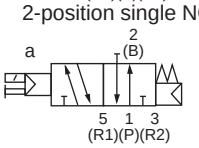

● Two 3-port valves integrated
(A side valve: NC, B side valve: NC)

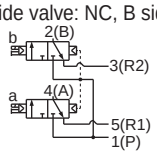

● 5-port valve
2-position single

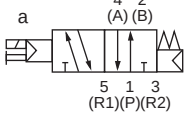

2-position double

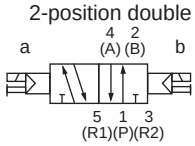

3-position all ports closed

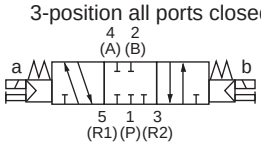

3-position A/B/R connection

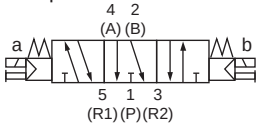

3-position P/A/B connection

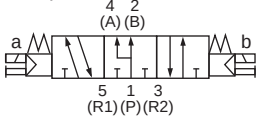

Manifold common specifications

Item	Description
Manifold	Block manifold
Mounting method	DIN rail mount
Supply and exhaust method	Common supply/common exhaust (With internal exhaust check valve)
Pilot exhaust method	Main valve/pilot valve common exhaust (Pilot exhaust check valve built-in)
Piping direction	Valve top direction
Valve and operation	Pilot operated soft spool valve
Working fluid	Compressed air
Max. working pressure MPa	0.7 (≈100 psi, 7 bar)
Min. working pressure MPa	0.2 (≈29 psi, 2 bar)
Proof pressure MPa	1.05 (≈150 psi, 10.5 bar)
Ambient temperature °C	-5 (23°F) to 55 (131°F) (no freezing)
Fluid temperature °C	5 (41°F) to 55 (131°F)
Manual override	Non-locking/locking common
Lubrication (*1)	Not required
Degree of protection (*2)	Dust-proof
Vibration resistance m/s^2	50 or less
Shock resistance m/s^2	300 or less
Atmosphere	Cannot be used in corrosive gas environments

Electrical specifications

Item	Description		
	T1□, T30□, T5□		T6G1, T7□, T8□
Rated voltage V	24 DC	12 DC	24 DC
V fluctuation range (*3)	±10%		+10%, -5%
Holding current A	0.017	0.034	0.017
Power consumption W	0.4		
Thermal class	B		
Surge suppressor	Zener diode		
Indicator	LED		

*3: T6G1, T7□ and T8□ (serial transmission) may experience voltage drops due to internal circuitry, so care should be taken when regulating voltages.

*1: Use turbine oil Class 1 ISO VG32 for lubrication. Excessive or intermittent lubrication results in unstable operation.
*2: Dust-proof degree of protection. Not drip-proof. Avoid dripping water or oil, etc., during use.

Individual specifications

Item		MN3GD1/MN4GD1									
		T10	T11	T30	T50	T51	T52	T53	T6G1	T7*1	T8*1/2
Max. station No.	Standard wiring	16 stations	24 stations	24 stations	16 stations	18 stations	8 stations	24 stations	16 stations	8/16 stations	16/24 stations
	Double wiring	8 stations	12 stations	12 stations	8 stations	9 stations	4 stations	12 stations	8 stations	4/8 stations	8/16 stations
Max. number of solenoids		16 points	24 points	24 points	16 points	18 points	8 points	24 points	16 points	8/16 points	16/32 points
Port size	A/B port	Push-in fitting ø4, ø6 M5									
	P/R Port	Push-in fitting ø6, ø8, ø6.4									

Item		MN3GD2/MN4GD2									
		T10	T11	T30	T50	T51	T52	T53	T6G1	T7*1	T8*1/2
Max. station No.	Standard wiring	16 stations	20 stations	20 stations	16 stations	18 stations	8 stations	20 stations	16 stations	8/16 stations	16/20 stations
	Double wiring	8 stations	12 stations	12 stations	8 stations	9 stations	4 stations	12 stations	8 stations	4/8 stations	8/16 stations
Max. number of solenoids		16 points	24 points	24 points	16 points	18 points	8 points	24 points	16 points	8/16 points	16/32 points
Port size	A/B port	Push-in fitting ø4, ø6, ø8 Rc 1/8									
	P/R Port	Push-in fitting ø8, ø10									

· For weight, refer to page 634.

Flow characteristics

Model No.	Solenoid position		P→A/B		A/B→R			
			C[dm^3/(s·bar)]	b	C[dm^3(s·bar)]		b	
MN3GD1 MN4GD1	Two 3-port valves integrated		0.87	0.37	1.0	(0.68)	0.14	(0.22)
	2-position		0.98	0.33	1.2	(0.71)	0.11	(0.27)
	3-position	All ports closed	0.92	0.34	1.0	-	0.16	-
		ABR connection	0.92	0.29	1.1	(0.69)	0.13	(0.22)
		PAB connection	1.1	0.35	1.1	-	0.17	-
MN3GD2 MN4GD2	Two 3-port valves integrated		1.7	0.37	2.2	(1.6)	0.13	(0.21)
	2-position		2.2	0.21	2.5	(1.7)	0.19	(0.10)
	3-position	All ports closed	2.0	0.25	2.3	-	0.10	-
		ABR connection	2.0	0.27	2.5	(1.7)	0.18	(0.12)
		PAB connection	2.3	0.31	2.3	-	0.16	-

*1: Effective cross-sectional area S and sonic conductance C are converted as S ≈ 5.0 x C.
*2: Values in ( ) are with the exhaust check valve.

Reduced wiring specifications

Item	T10	T11	T30	T50	T51	T52	T53
Type	Common terminal block M3 thread	Common terminal block clamping	D-sub-connector	20-pin flat cable connector (with power supply terminal)	20-pin flat cable connector, no power supply terminal	10-pin flat cable connector, no power supply terminal	26-pin flat cable connector, no power supply terminal
Connector	—	—	D-sub-connector 25-pin	MIL-C-83503 standard compliant pressure welding socket 20-pin	MIL-C-83503 standard compliant pressure welding socket 20-pin	MIL-C-83503 standard compliant pressure welding socket 10-pin	MIL-C-83503 standard compliant pressure welding socket 26-pin

Serial transmission device unit specifications

Download the communication setting file from the CKD website (https://www.ckd.co.jp/en/).

Item		T6G1
Network name		CC-Link ver. 1.10
Power supply voltage	Unit side	24 VDC ±10%
	Valve side	24 VDC 10%, −5%
Current consumption	Unit side	100 mA or less (when all output points are ON)
	Valve side	15 mA or less (when all output points are OFF)
	Communication side	—
No. of output points		16 points
Occupied number		1 station
Operation display		LED (power supply and communication status)
Output		NPN

Item		T7G1	T7L1*1	T7D1	T7S1	T7SP1
Network name		CC-Link ver. 1.10	SAVE NET	DeviceNet*2	CompoNet	
Power supply voltage	Unit side	24 VDC 10%, −5% Common power supply terminal				
	Valve side					
	Communication side	—	—	11 to 25 VDC *3	14.0 to 26.4 VDC	
Current consumption	Unit side	110 mA or less (when all output points are ON) Load current is not included			40 mA or less (when all output points are ON) Load current is not included	
	Valve side					
	Communication side	—	—	50 mA or less	65 mA or less (all points ON:24 VDC) 95 mA or less (all points ON:14 VDC)	
No. of output points		16 points	16 points	16 points	16 points	
Occupied number		1 station	1 station	2 bytes	Word device 1 node (16 points)	
Operation display		LED (power supply and communication status)				
Output		NPN			NPN	PNP

Item		T8G1 T8G2	T8GP1 T8GP2	T8P1 T8P2	T8PP1 T8PP2	T8EC1 T8EC2	T8ECP1 T8ECP2	T8EN1 T8EN2	T8ENP1 T8ENP2	T8D1 T8D2	T8DP1 T8DP2	T8EB1 T8EB2	T8EBP1 T8EBP2	T8EP1 T8EP2	T8EPP1 T8EPP2
Communication protocol		CC-Link ver. 1.10		PROFIBUS-DP (V0)		EtherCAT		EtherNet/IP		DeviceNet		CC-Link IEF Basic		PROFINET	
Power supply voltage	Unit side	24 VDC ±10%								11 to 25 VDC		24 VDC ±10%			
	Valve side	24 VDC+10%, -5%													
Current consumption	Unit side	60 mA or less (when all output points are ON)		60 mA or less (when all output points are ON)		110 mA or less (when all output points are ON)		120 mA or less (when all output points are ON)		70 mA or less (when all output points are ON)		130 mA or less (when all output points are ON)		130 mA or less (when all output points are ON)	
	Valve side	T8□1: 15 mA or less T8□2: 20 mA or less (When all output points are ON) Load current is not included								15 mA or less (When all output points are ON) Load current is not included					
No. of output points		T8 □ 1:16-point T8 □ 2: 32 points													
Occupied number		1 station													
Operation display		LED (power supply and communication status)													
Output		NPN output	PNP output	NPN output	PNP output	NPN output	PNP output	NPN output	PNP output	NPN output	PNP output	NPN output	PNP output	NPN output	PNP output

*1 Transmission bit rate of 128 bits and half-duplex transmission method are supported. Contact CKD for other specifications.
*2 Also compatible with DeviceNet compliant networks (DLNK, etc.)
*3 The communication power supply (V+, V- on the DeviceNet cable) is insulated from the power supply terminal (unit power supply/valve power supply).

How to order

Manifold model No.

MN4GD1 1 0R - C6 - T30 W H - 10 - 3

3-port manifold model No.

MN3GD1 1 0R - C6 - T30 W H - 10 - 3

Discrete valve block with solenoid valve

N4GD1 1 0R - C6 - A2N *1 H — 3

Discrete 3-port valve block with solenoid valve

N3GD1 1 0R - C6 - A2N *1 H — 3

Discrete solenoid valve

4GD1 1 9R - C6 - A2N H — 3

Discrete 3-port solenoid valve

3GD1 1 9R - C6 - A2N H — 3

Ⓑ Solenoid position

Ⓐ Model No.

Ⓒ Port size (*1)

Ⓓ Reduced wiring connection

Ⓔ Terminal/connector pin array

Ⓕ Option

Ⓖ Station No.

Ⓗ Voltage

Ⓐ Model No.	Manifold				Discrete valve block with solenoid valve			
	3-port valve		5-port valve		Discrete solenoid valve			
	MN3GD1	MN3GD2	MN4GD1	MN4GD2	(N)3GD1	(N)3GD2	(N)4GD1	(N)4GD2

Ⓑ Solenoid position										
1	2-position single			●	●			●	●	
2	2-position double			●	●			●	●	
3	3-position all ports closed			●	●			●	●	
4	3-position ABR connection			●	●			●	●	
5	3-position PAB connection			●	●			●	●	
1	2-position single normally closed (*2)	●	●			●	●			
11	2-position single normally open (*2)	●	●			●	●			
66	Two 3-port valves integrated (*2) (*3)	A side valve: Normally closed	●	●			●	●		
		B side valve: Normally closed								
8	Mix manifold (when there are multiple solenoid positions)		●	●	●	●	●	●	●	●

Ⓒ Port size (A/B-port)									
Code									
C4	ø4 push-in fitting	●	●	●	●	●	●	●	●
C6	ø6 push-in fitting	●	●	●	●	●	●	●	●
C8	ø8 push-in fitting		●		●		●		●
CX	Push-in fitting mix (*4)	●	●	●	●				
M5	M5	●		●		●		●	
06	Rc1/8		●		●		●		●

Ⓓ Reduced wiring connection, serial transmission
Refer to the next page for reduced wiring and serial transmission.

Ⓔ Terminal/connector pin array									
Blank	Standard wiring (*5)	●	●	●	●	●	●	●	●
W	Double wiring (*5)	●	●	●	●	●	●	●	●

Ⓕ Option									
Blank	Non-locking/locking common manual override	●	●	●	●	●	●	●	●
H	With exhaust check valve (*6)	●	●	●	●	●	●	●	●
A	Ozone/coolant proof	●	●	●	●	●	●	●	●
F	A/B port filter built in (*7)	●	●	●	●	●	●	●	●
Z1	Air supply spacer (*8)	●	●	●	●				
Z3	Exhaust spacer (*8)	●	●	●	●				

Ⓖ Station No.									
1	1 station	●	●	●	●				
to	to								
24	24 stations (See page 630: max. station No./model)								

Ⓗ Voltage									
3	24 VDC	●	●	●	●	●	●	●	●
4	12 VDC	●	●	●	●	●	●	●	●

is not available.

⚠ Precautions for model selection

*1 Specify the P/R port bore size with the supply and exhaust block model No. in the manifold specifications sheet.

*2 Select MN4GD*80R when mixing with 4, 5R port valves. Further, select MN3GD*80R when mixing with masking plate.

*3 Dimensions are the same as the respective 2-position double solenoid.

*4 The push-in fitting cannot be mixed with the discrete valve's 4(A) or 2(B) port.

*5 Blank...The wiring will be based on the type of valve used.
W*...All wired for double solenoid valves regardless of the type of valve used.

*6 3-position all ports closed and PAB connection are not provided with the exhaust check valve specifications (H). Refer to page 851 for details on the exhaust check valve.

*7 A filter is built into the P-port as standard. Specify the spacer mounting position/quantity in manifold specifications sheet.

*8 Stacking of spacers is not possible. Combination with the masking plate is not supported.
Refer to pages 679 to 682 for details.

Ⓓ			Ⓐ Model No.							
			Manifold				Discrete valve block with solenoid valve Discrete solenoid valve			
			3-port valve		5-port valve					
			MN3GD1	MN3GD2	MN4GD1	MN4GD2	(N)3GD1	(N)3GD2	(N)4GD1	(N)4GD2
Reduced wiring (lamp and surge suppressor provided as standard) 12/24VDC										
T10	Common terminal block (M3 thread)	Left spec.	●	●	●	●				
T10R		Right spec.	●	●	●	●				
T11	Common terminal block (clamping)	Left spec.	●	●	●	●				
T11R		Right spec.	●	●	●	●				
T30	D-sub-connector	Left spec.	●	●	●	●				
T30R		Right spec.	●	●	●	●				
T50	20-pin flat cable connector (with power supply terminal)	Left spec.	●	●	●	●				
T50R		Right spec.	●	●	●	●				
T51	20-pin flat cable connector (without power supply terminal)	Left spec.	●	●	●	●				
T51R		Right spec.	●	●	●	●				
T52	10-pin flat cable connector (without power supply terminal)	Left spec.	●	●	●	●				
T52R		Right spec.	●	●	●	●				
T53	26-pin flat cable connector (without power supply terminal)	Left spec.	●	●	●	●				
T53R		Right spec.	●	●	●	●				
Serial transmission (lamp/surge suppressor provided as standard) 24 VDC										
T6G1	CC-Link	NPN 16 points	●	●	●	●				
T7D1	DeviceNet	NPN 16 points	●	●	●	●				
T7G1	CC-Link	NPN 16 points	●	●	●	●				
T7L1	SAVE NET	NPN 16 points	●	●	●	●				
T7S1	CompoNet	NPN 16 points	●	●	●	●				
T7SP1		PNP 16 points	●	●	●	●				
T8G1	CC-Link	NPN 16 points	●	●	●	●				
T8G2		NPN 32 points	●	●	●	●				
T8GP1		PNP 16 points	●	●	●	●				
T8GP2		PNP 32 points	●	●	●	●				
T8P1	PROFIBUS-DP	NPN 16 points	●	●	●	●				
T8P2		NPN 32 points	●	●	●	●				
T8PP1		PNP 16 points	●	●	●	●				
T8PP2		PNP 32 points	●	●	●	●				
T8EC1	EtherCAT	NPN 16 points	●	●	●	●				
T8EC2		NPN 32 points	●	●	●	●				
T8ECP1		PNP 16 points	●	●	●	●				
T8ECP2		PNP 32 points	●	●	●	●				
T8EN1	EtherNet/IP	NPN 16 points	●	●	●	●				
T8EN2		NPN 32 points	●	●	●	●				
T8ENP1		PNP 16 points	●	●	●	●				
T8ENP2		PNP 32 points	●	●	●	●				
T8D1	DeviceNet	NPN 16 points	●	●	●	●				
T8D2		NPN 32 points	●	●	●	●				
T8DP1		PNP 16 points	●	●	●	●				
T8DP2		PNP 32 points	●	●	●	●				
T8EB1	CC-Link IEF Basic	NPN 16 points	●	●	●	●				
T8EB2		NPN 32 points	●	●	●	●				
T8EBP1		PNP 16 points	●	●	●	●				
T8EBP2		PNP 32 points	●	●	●	●				
T8EP1	PROFINET	NPN 16 points	●	●	●	●				
T8EP2		NPN 32 points	●	●	●	●				
T8EPP1		PNP 16 points	●	●	●	●				
T8EPP2		PNP 32 points	●	●	●	●				
A2N	Without lead wire (without socket)	With surge suppressor/ indicator lamp					●	●	●	●

is not available.

Ozone-proof specifications • Coolant proof specifications

Can be selected with "How to order" Item Ⓕ option "A" on page 632.

Specifications for rechargeable battery (Catalog No. CC-1226A)

● For use in the rechargeable battery manufacturing process, materials used for air path and sliding section are limited

** - Voltage - **P4**

CE marking specifications

** - Voltage - **ST**

- Standard voltage of 24 VDC or less is CE marking-compatible even if the model No. is not indicated with "ST".

Manifold components explanation and parts list

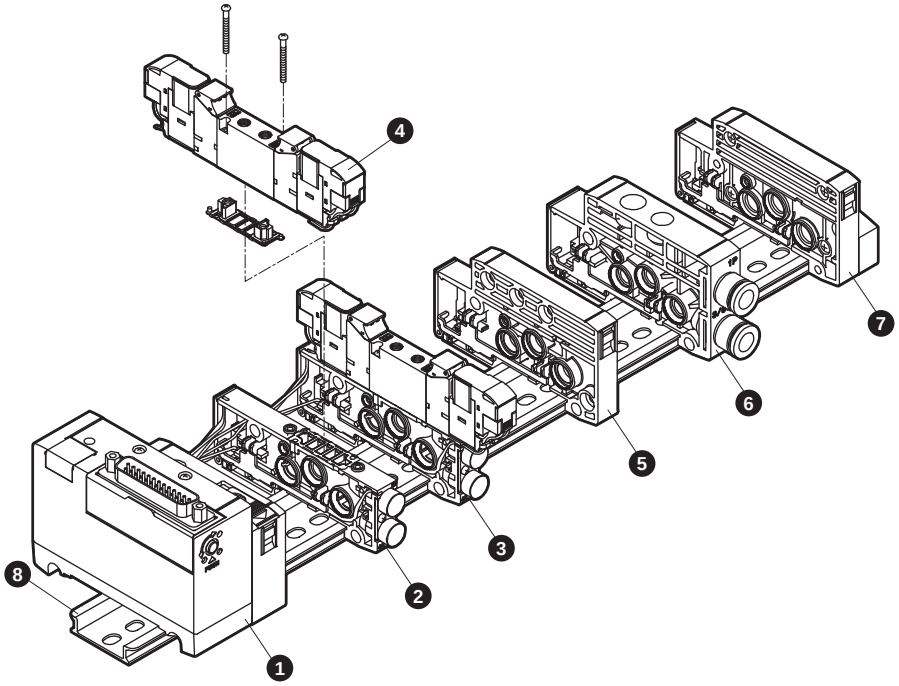

List of main components (refer to pages 668 to 682 for details)

No.	Component name	Model No. (example)	No.	Component name	Model No. (example)
1	Wiring block (Note)	N4G1R-T30	5	Partition block	N4G1R-S
2	Discrete valve block	N4GA1R-V2	6	Supply and exhaust block	N4G1R-Q-8
3	Discrete valve block with solenoid valve	N4GD120R-M5-A2NH-3	7	End block R	N4G1R-ER
4	Solenoid valve body	4GD129R-M5-A2NH-3	8	DIN rail	N4GR-BAA (Length)

(Note) Wiring block cannot be ordered as a single item.

D type reduced wiring weight

4GD1

(g)

Part name	Model No.	Weight	Part name	Model No.	Weight	Part name	Model No.	Weight
Valve block with solenoid valve	N3GD110R-C6-A2N-3	72	Supply and exhaust block	N4G1R-Q-8	53	Wiring block	N4G1R-T10(R)	207
	N3GD1110R-C6-A2N-3	72	End block	N4G1R-E*	60		N4G1R-T30(R)	165
	N4GD110R-C6-A2N-3	72		N4G1R-EX*	60		N4G1R-T50(R)	163
	N4GD120R-C6-A2N-3	91	Partition block	N4G1R-S	45		N4G1R-T6G1	295
	N4GD1$\frac{3}{4}_{5}$0R-C6-A2N-3	93	Valve block (for single)	N4GA1R-V1	28		N4G1R-T7*	203
	N3GD1660R-C6-A2N-3	91	Valve block (for double/3-position)	N4GA1R-V2	30		N4G1R-T8*	229
Valve block with masking plate	N4GA1R-MP*	34	DIN rail	N4GR-BAA*	0.19/mm			

(Note) Wiring block cannot be ordered as a single item.

4GD2

(g)

Part name	Model No.	Weight	Part name	Model No.	Weight	Part name	Model No.	Weight
Valve block with solenoid valve	N3GD210R-C8-A2N-3	137	Supply and exhaust block	N4G2R-Q-10	83	Wiring block	N4G2R-T10(R)	223
	N3GD2110R-C8-A2N-3	137	End block	N4G2R-E*	84		N4G2R-T30(R)	182
	N4GD210R-C8-A2N-3	137		N4G2R-EX*	85		N4G2R-T50(R)	184
	N4GD220R-C8-A2N-3	157	Partition block	N4G2R-S	60		N4G2R-T6G1	312
	N4GD2$\frac{3}{4}_{5}$0R-C8-A2N-3	169	Valve block (for single)	N4GA2R-V1	53		N4G2R-T7*	244
	N3GD2660R-C8-A2N-3	157	Valve block (for double/3-position)	N4GA2R-V2	55		N4G2R-T8*	242
Valve block with masking plate	N4GA2R-MP*	66	DIN rail	N4GR-BAA*	0.19/mm			

(Note) Wiring block cannot be ordered as a single item.

Parts list

Applicable	Part name	Model No.	Applicable	Part name	Model No.
Valve 4G1	Cartridge fitting ø4 straight	4G1R-JOINT-C4	Common	Coil assembly	4GR-A2N-[*2]-COIL-[*3] *2: Ozone/coolant proof (blank, A) *3: Voltage (3, 4)
	Cartridge fitting ø6 straight	4G1R-JOINT-C6			
	Plug cartridge	4G1R-JOINT-CPG			
Valve 4G2	Cartridge fitting ø4 straight	4G2R-JOINT-C4	Manifold	Expansion socket assembly (Details on page 837)	a side for solenoid N4GR-SOCKET-ASSY-[selection No.]
	Cartridge fitting ø6 straight	4G2R-JOINT-C6			
	Cartridge fitting ø8 straight	4G2R-JOINT-C8			b side for solenoid N4GR-RELAY-SOCKET-[selection No.]
	Plug cartridge	4G2R-JOINT-CPG			

MEMO

Dimensions CAD

MN4GD1

● Common terminal block (M3 thread) left side (T10)

*1: Clamping specification (T11) is also available. Dimensions are the same as T10.
*2: For the 2-position single 3-port valve, either A port or B port is a plug. In addition, the two 3-port valve integrated has the same dimensions as the double model.

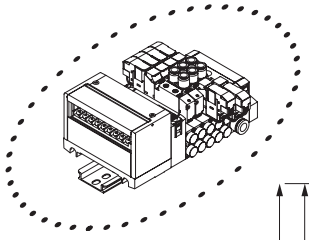

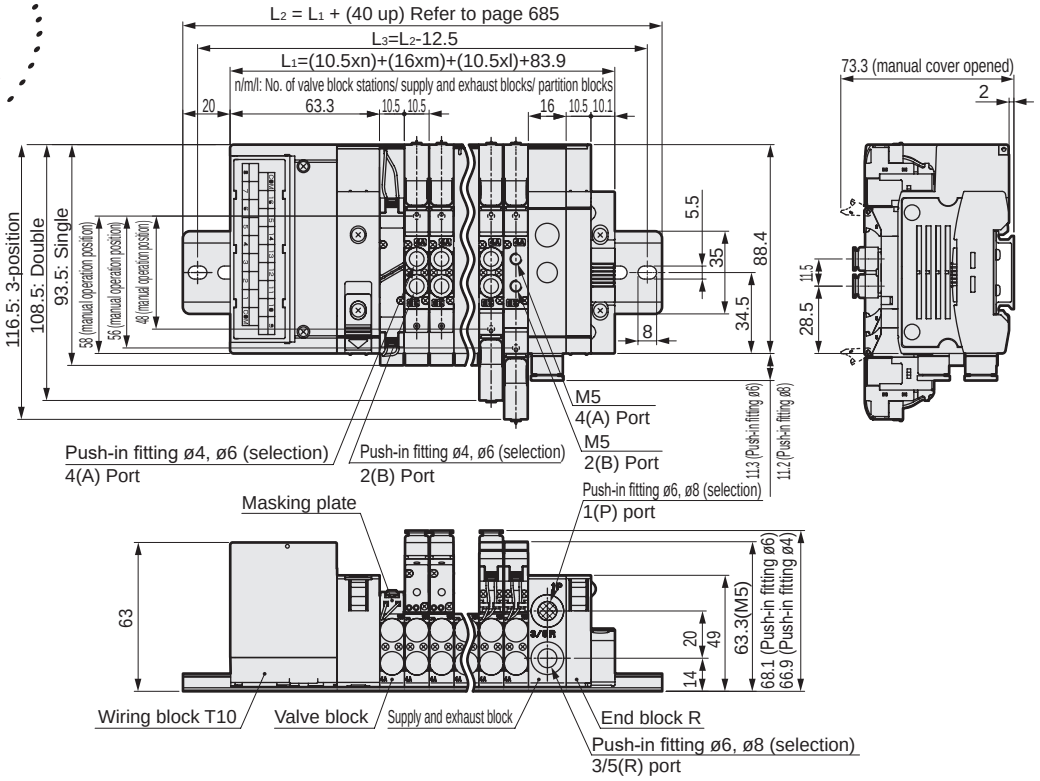

● Common terminal block (M3 thread) right side (T10R)

*1: Clamping specification (T11R) is also available. Dimensions are the same as T10R.
*2: For the 2-position single 3-port valve, either A port or B port is a plug. In addition, the two 3-port valve integrated has the same dimensions as the double model.

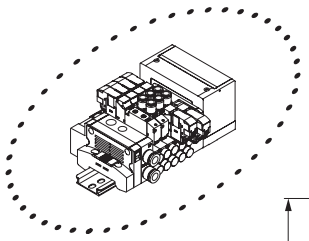

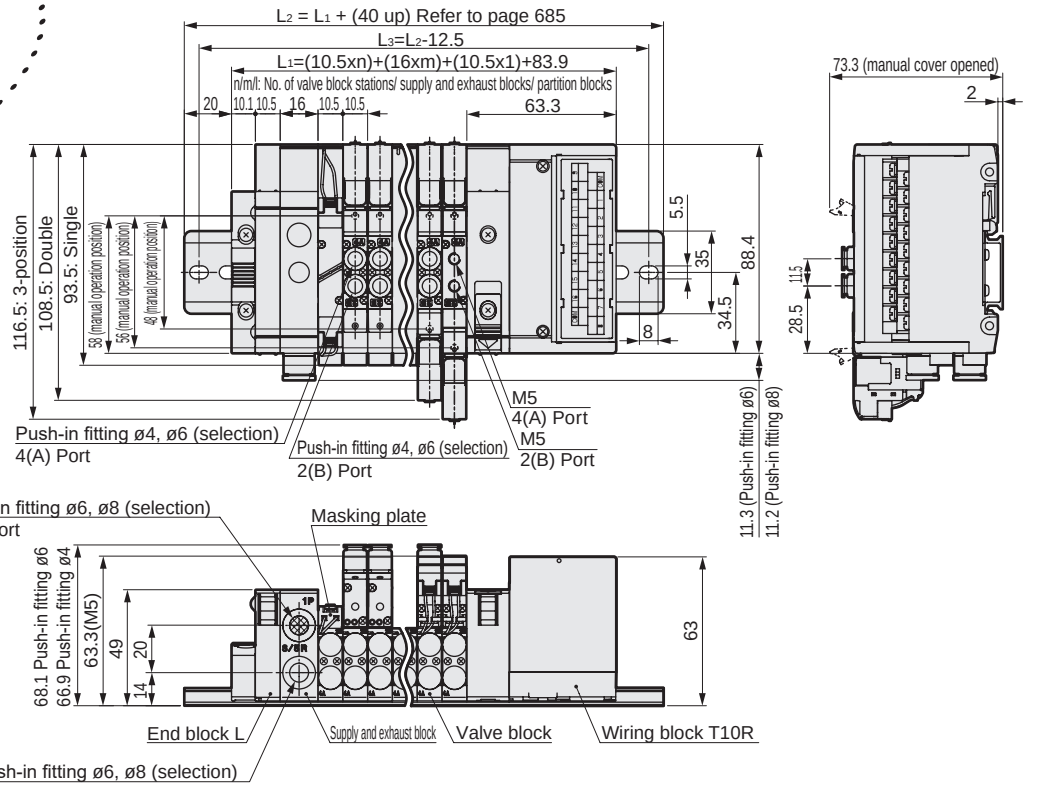

Dimensions

MN4GD2

● Common terminal block (M3 thread) left side (T10)

*1: Clamping specification (T11) is also available. Dimensions are the same as T10.
*2: For the 2-position single 3-port valve, either A port or B port is a plug. In addition, the two 3-port valve integrated has the same dimensions as the double model.

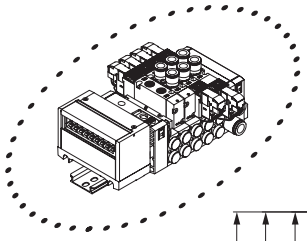

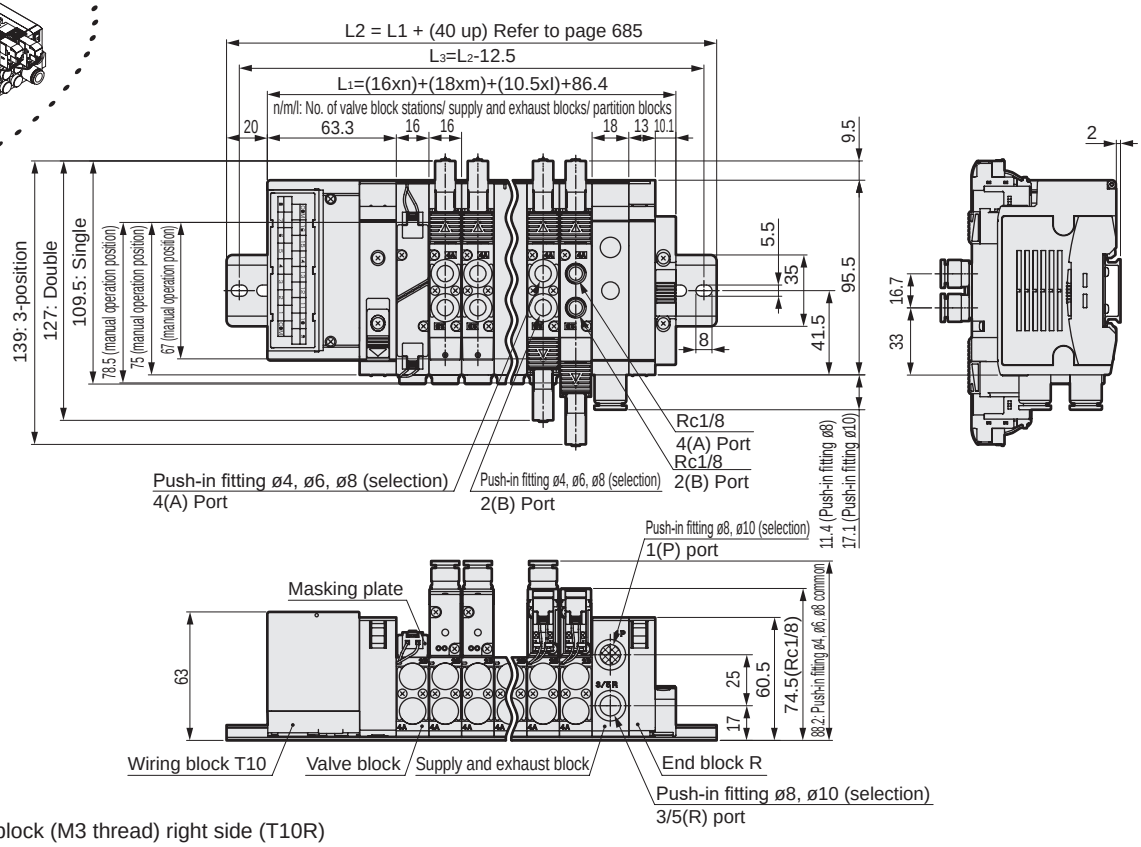

● Common terminal block (M3 thread) right side (T10R)

*1: Clamping specification (T11R) is also available. Dimensions are the same as T10R.
*2: For the 2-position single 3-port valve, either A port or B port is a plug. In addition, the two 3-port valve integrated has the same dimensions as the double model.

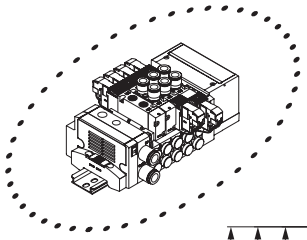

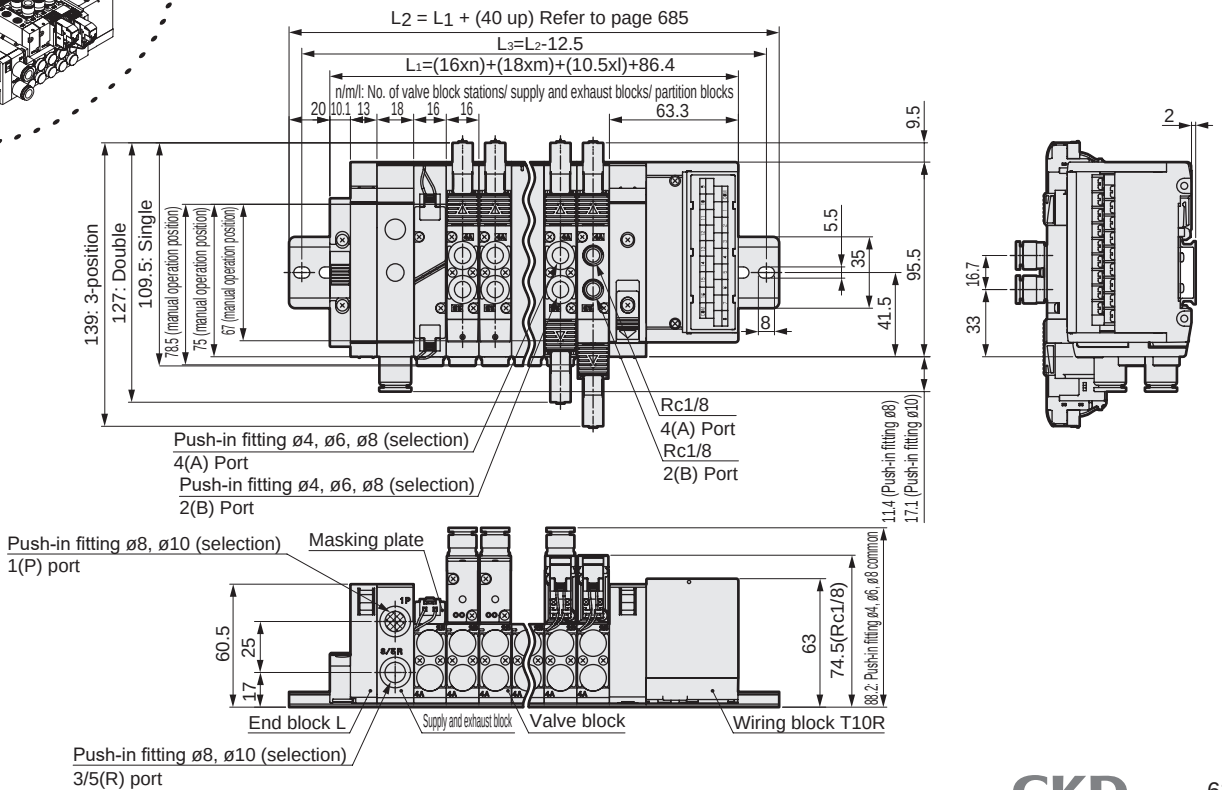

Dimensions CAD

MN4GD1

● D sub-connector left side (T30)

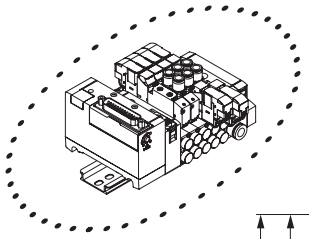

Note : For the 2-position single 3-port valve, either A port or B port is a plug. In addition, the two 3-port valve integrated has the same dimensions as the double model.

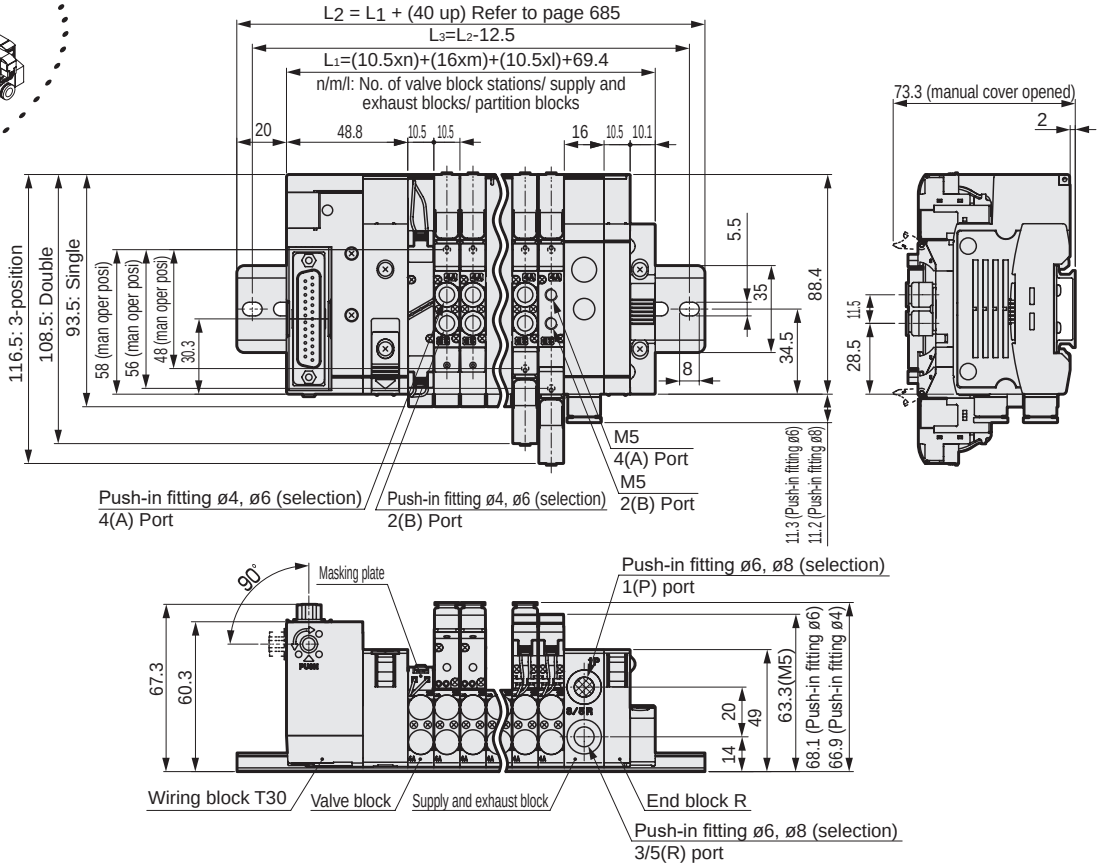

● D sub-connector right side (T30R)

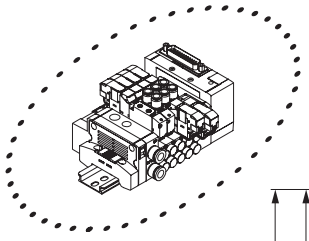

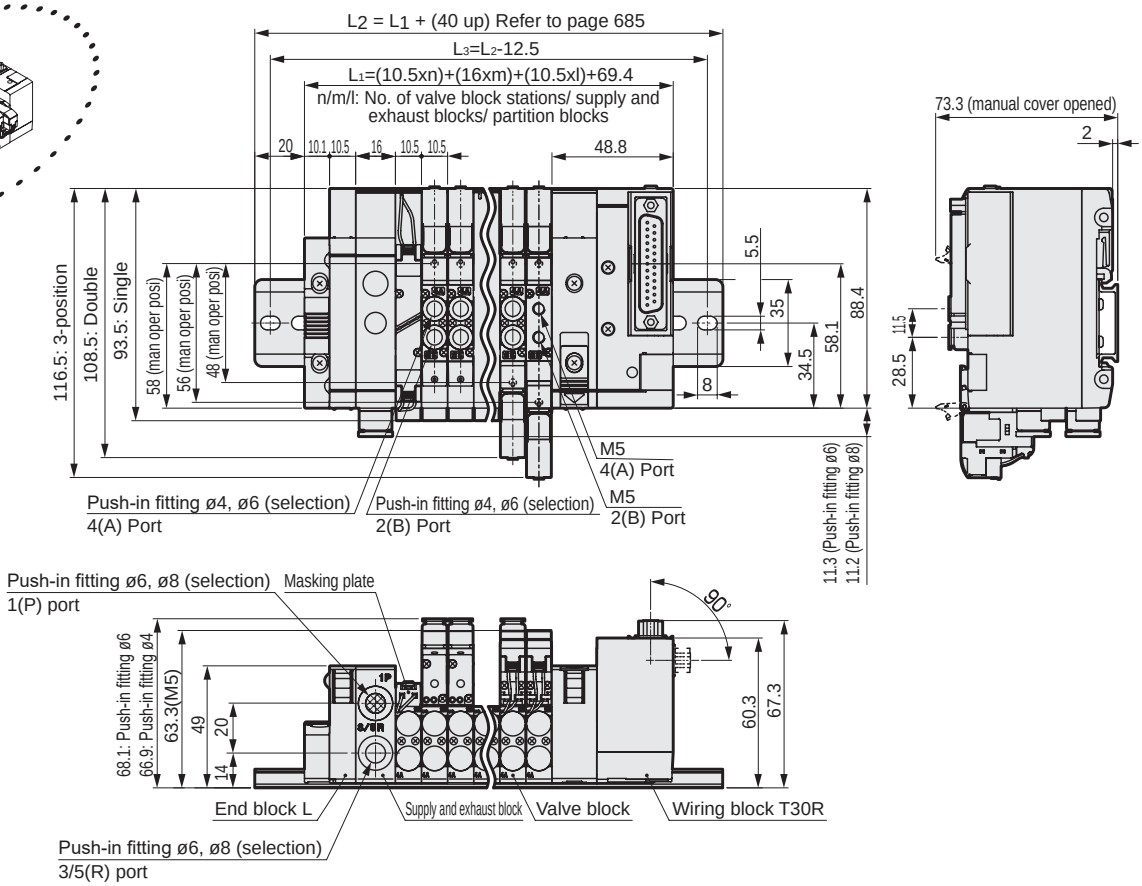

Dimensions CAD

MN4GD2

Note : For the 2-position single 3-port valve, either A port or B port is a plug. In addition, the two 3-port valve integrated has the same dimensions as the double model.

● D sub-connector left side (T30)

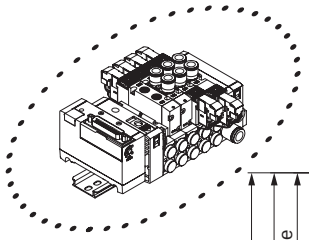

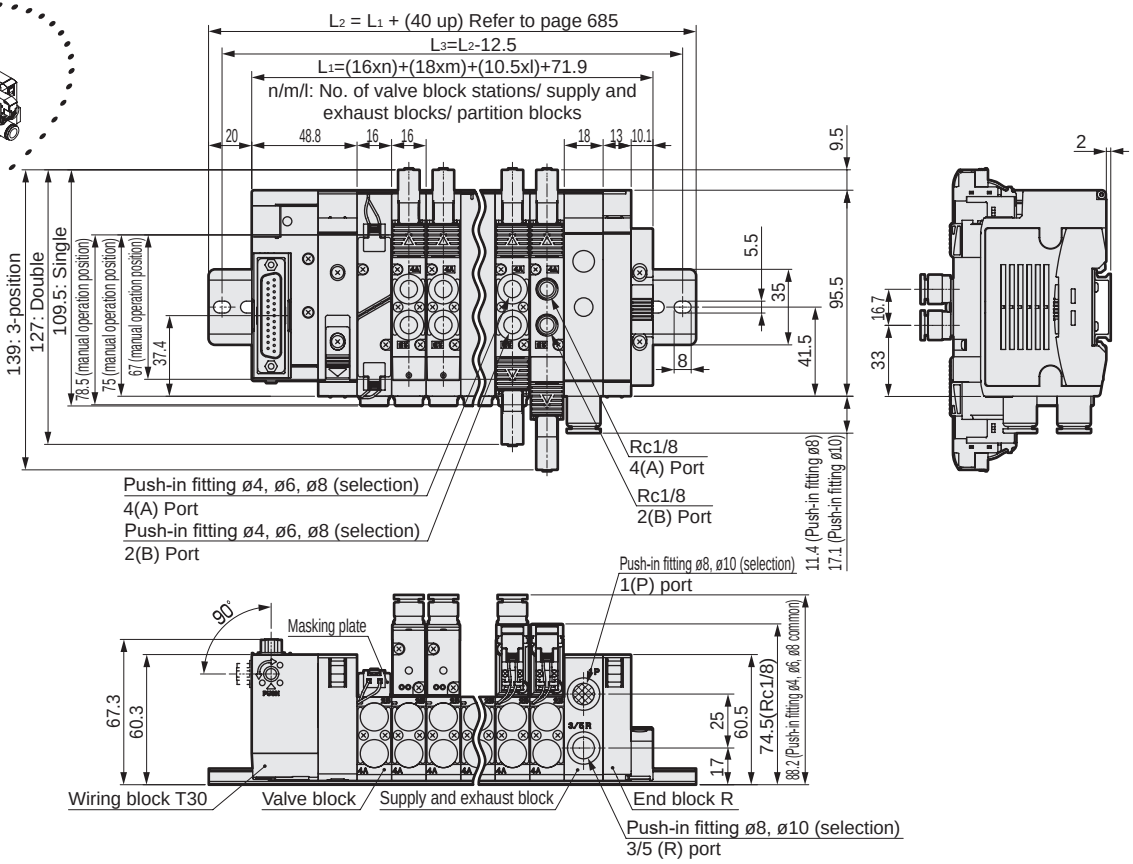

● D sub-connector right side (T30R)

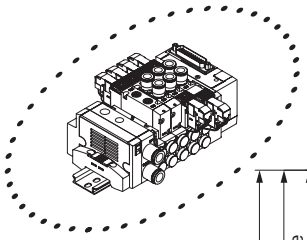

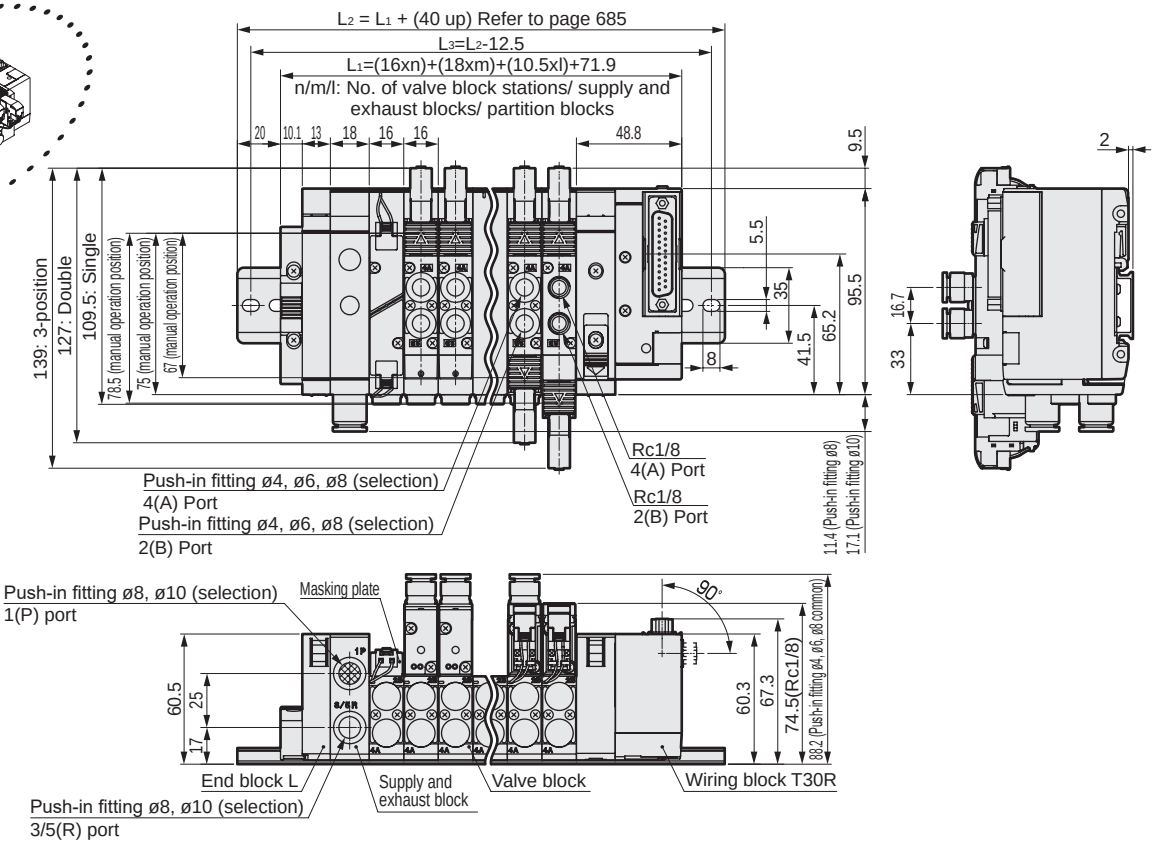

Dimensions CAD

MN4GD1

*1: T51, T52, and T53 are also available as flat cable connector. Dimensions are the same as T50.

*2: For the 2-position single 3-port valve, either A port or B port is a plug. In addition, the two 3-port valve integrated has the same dimensions as the double model.

● Flat cable connector left side (T50)
With power supply terminal

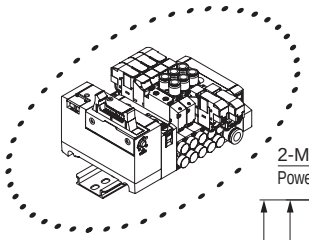

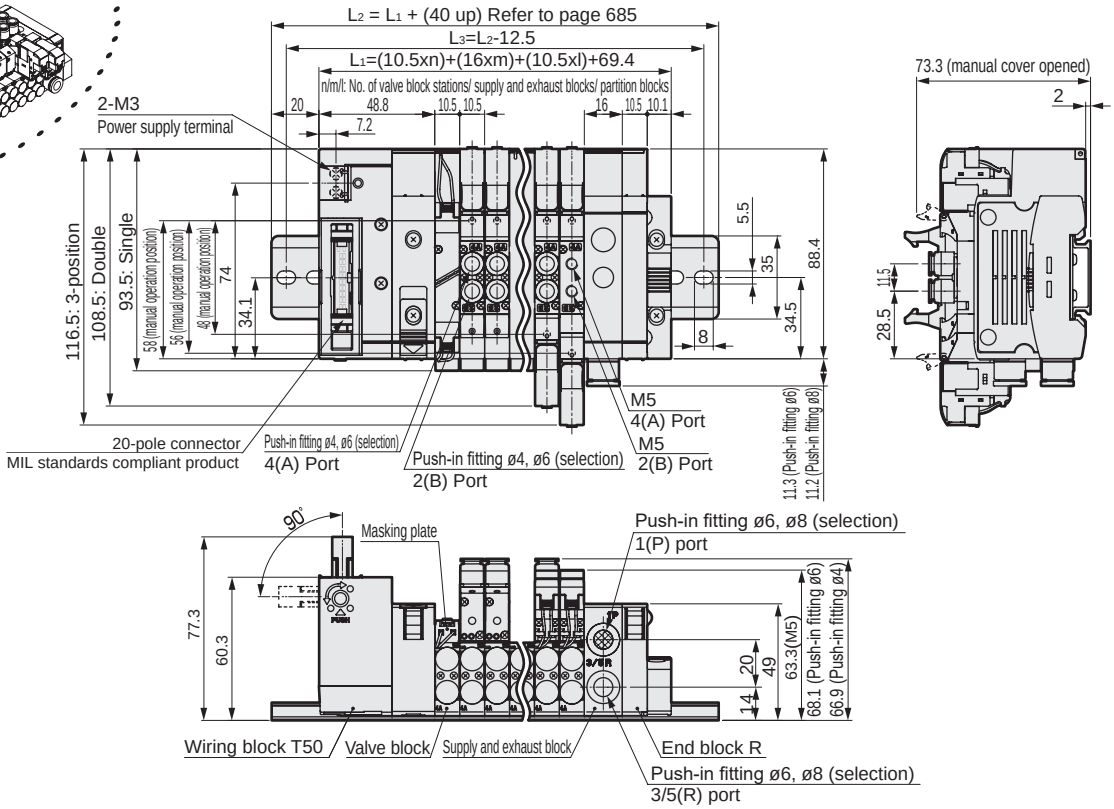

● Flat cable connector right side (T50R)
With power supply terminal

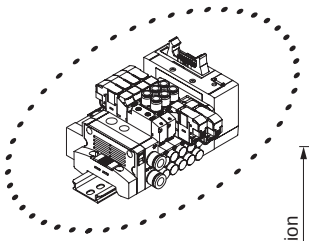

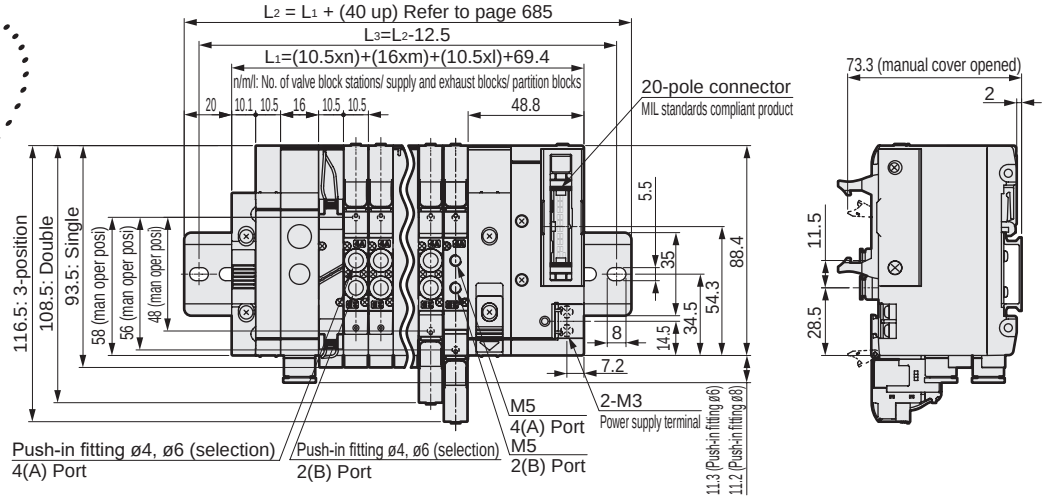

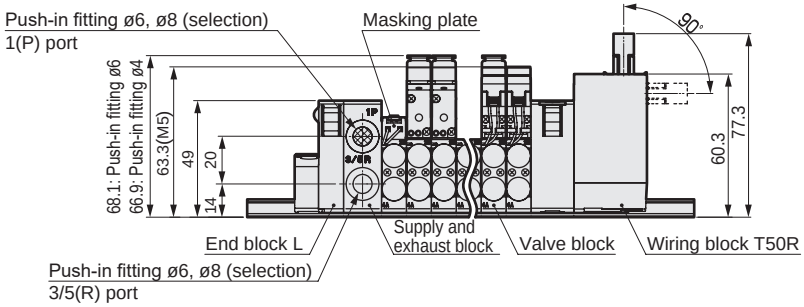

Dimensions

MN4GD2

*1: T51, T52, and T53 are also available as flat cable connector. Dimensions are the same as T50.
*2: For the 2-position single 3-port valve, either A port or B port is a plug. In addition, the two 3-port valve integrated has the same dimensions as the double model.

● Flat cable connector left side (T50)
With power supply terminal

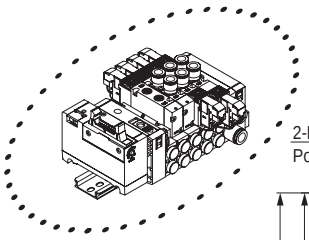

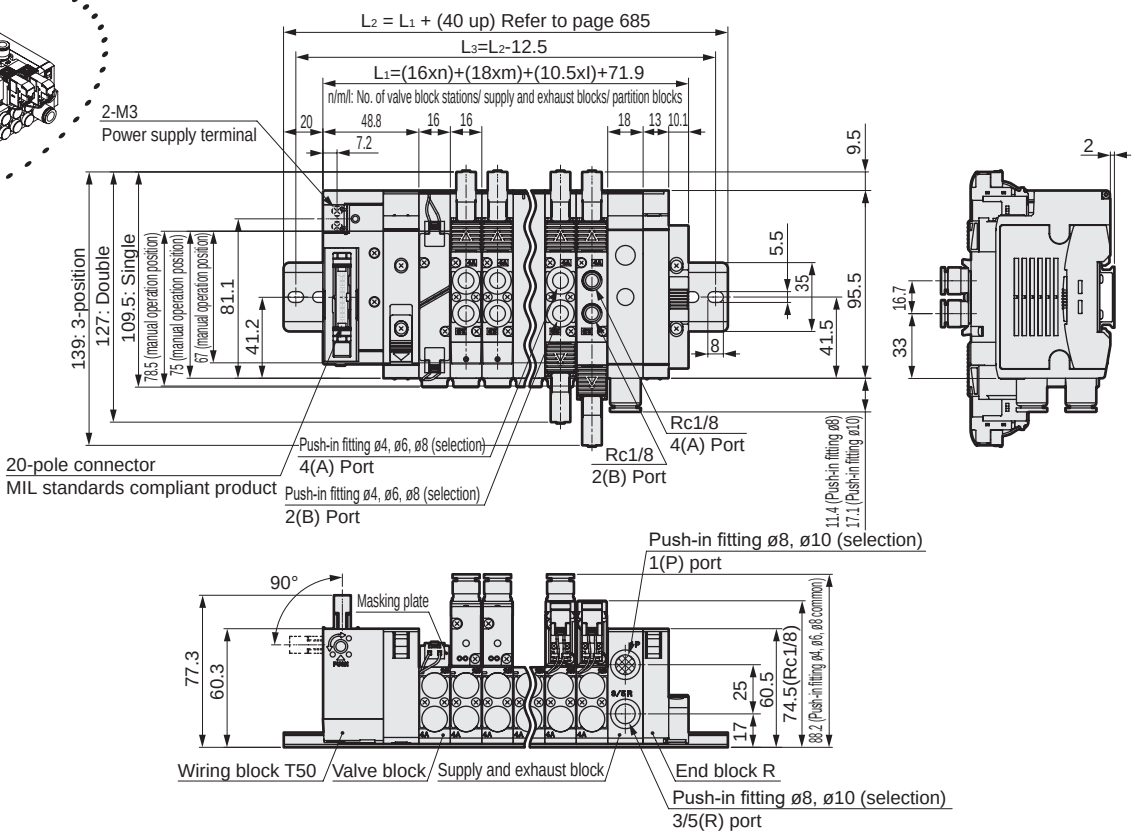

● Flat cable connector right side (T50R)
With power supply terminal

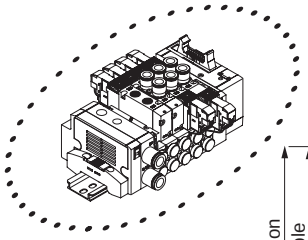

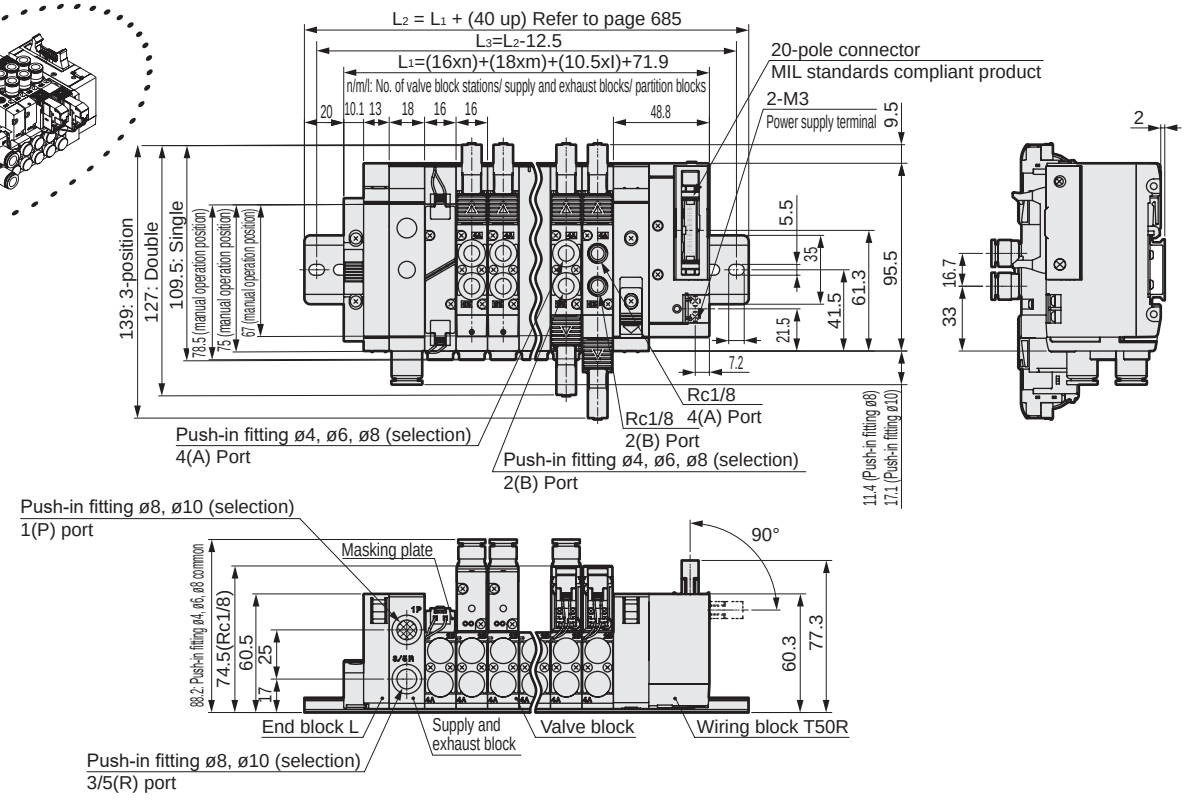

Dimensions CAD

MN4GD1

● Serial transmission (T6G1)

Note : For the 2-position single 3-port valve, either A port or B port is a plug. In addition, the two 3-port valve integrated has the same dimensions as the double model.

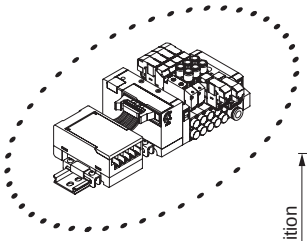

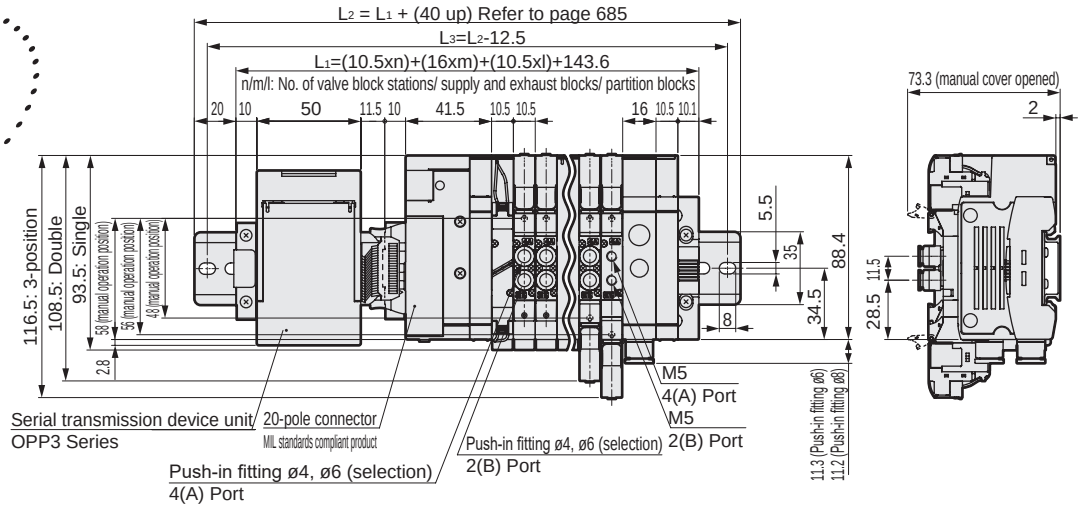

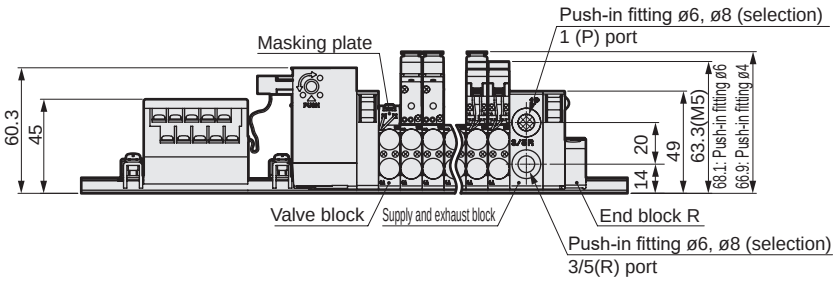

MN4GD2

● Serial transmission (T6G1)

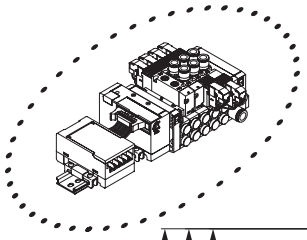

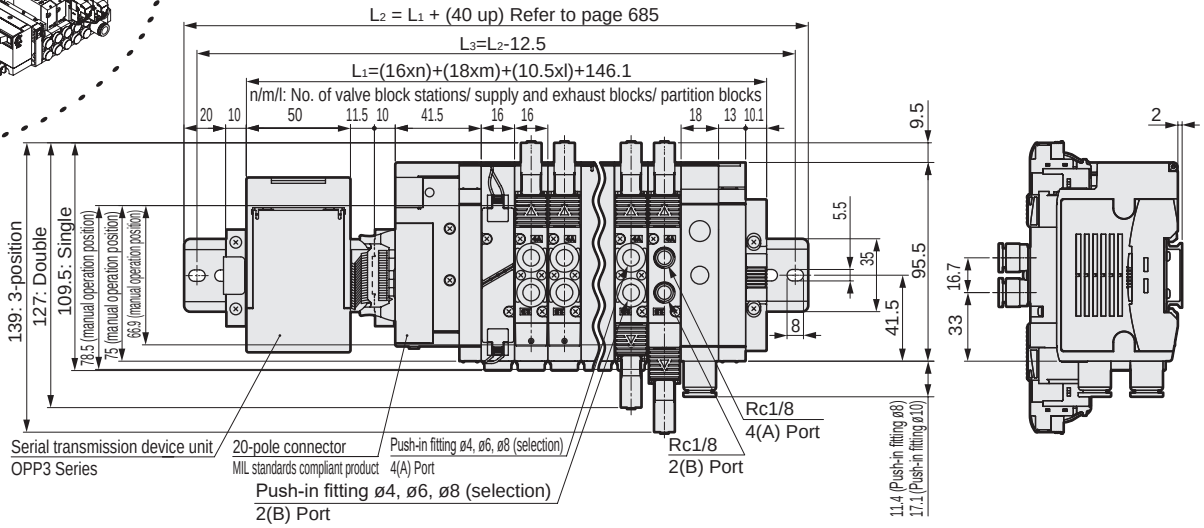

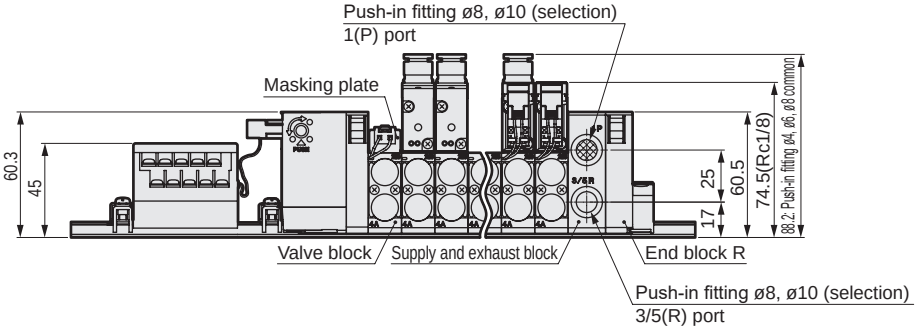

Dimensions CAD

MN4GD1

● Thin serial transmission (T7□)

Note : For the 2-position single 3-port valve, either A port or B port is a plug. In addition, the two 3-port valve integrated has the same dimensions as the double model.

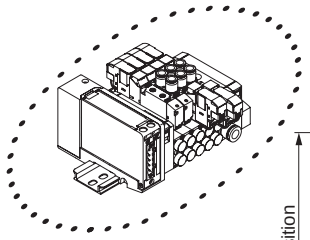

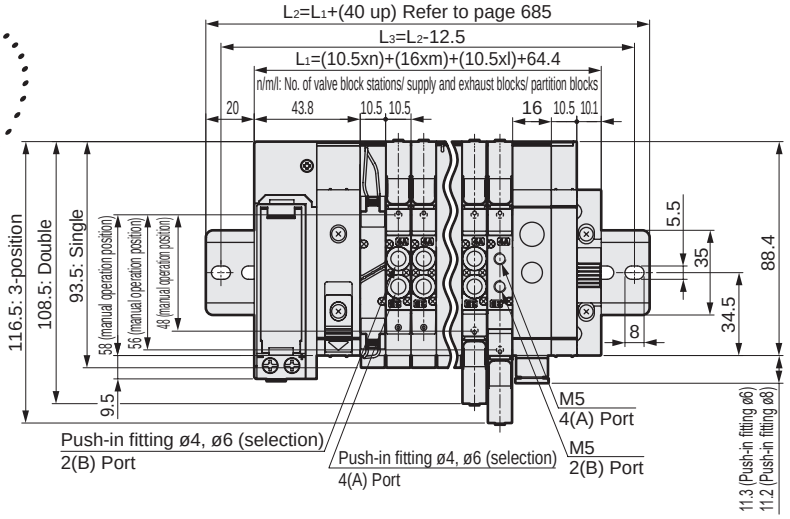

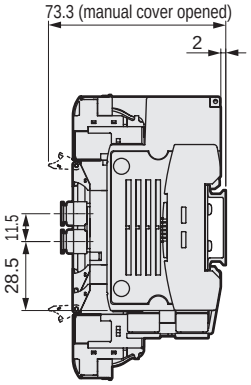

For T7S□1

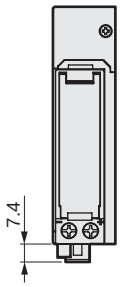

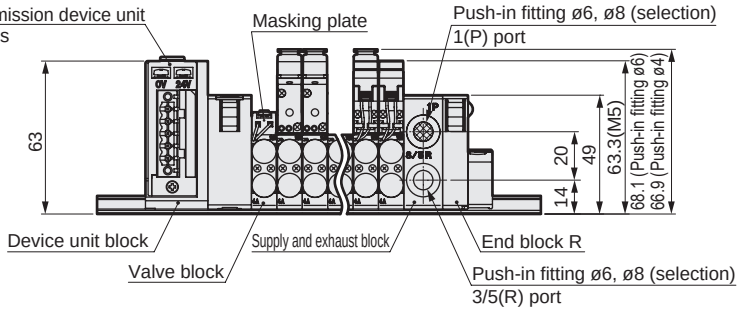

MN4GD2

● Thin serial transmission (T7□)

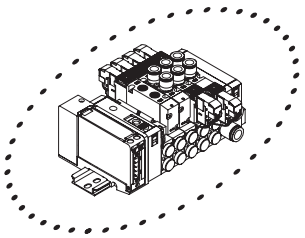

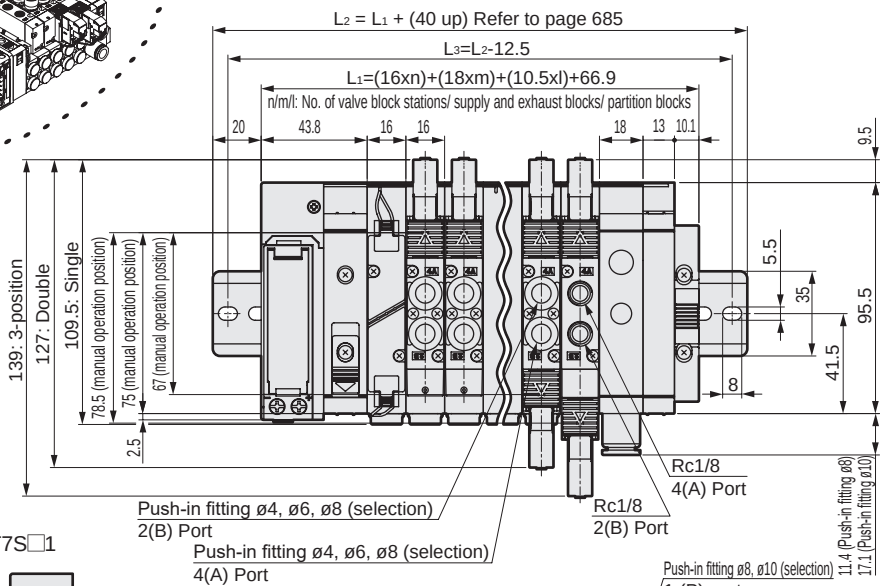

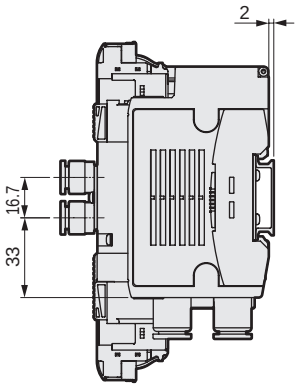

For T7S□1

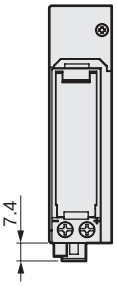

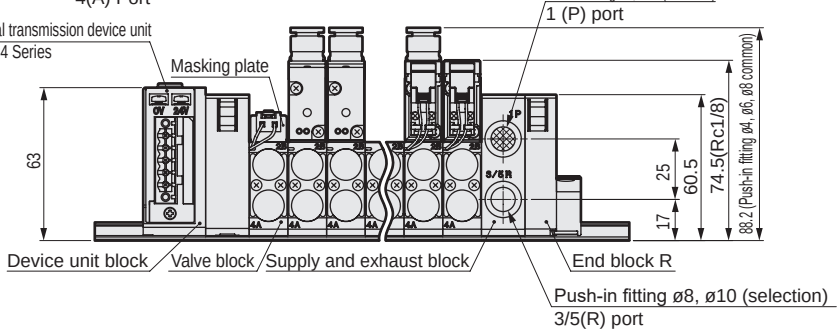

Dimensions CAD

MN4GD1

Note: For the 2-position single 3-port valve, either port A or port B is a plug. In addition, the two 3-port valve built-in type has the same dimensions as the double model.

● Serial transmission (T8□)

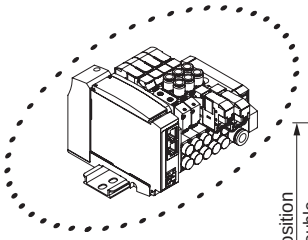

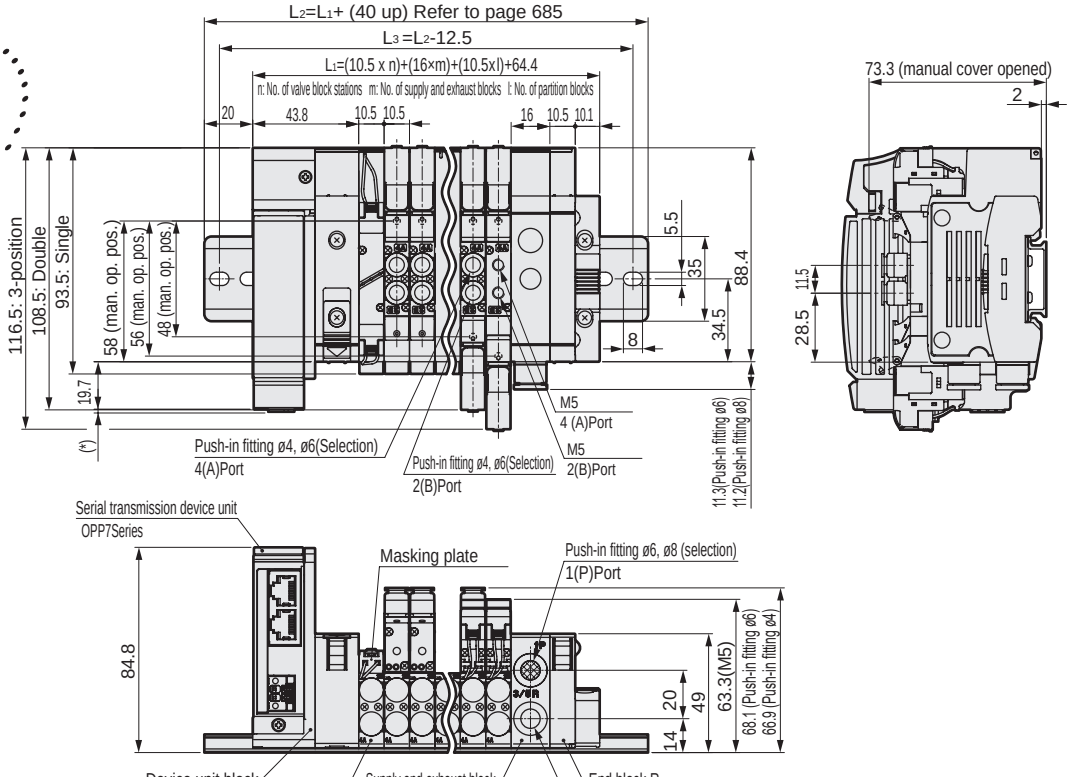

Serial transmission	* Dimensions
T8G □	1.0
T8P □	4.9
T8E □	1.5
T8D □	1.0

MN4GD2

● Serial transmission (T8□)

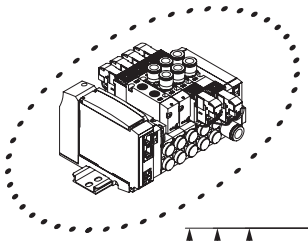

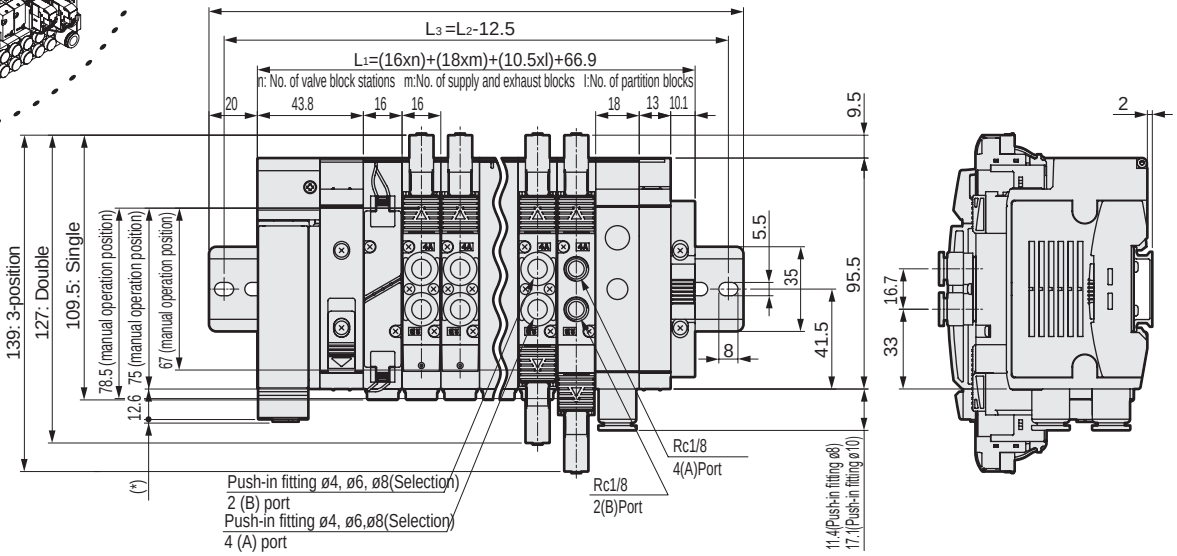

Serial transmission	* Dimensions
T8G □	1.0
T8P □	4.9
T8E □	1.5
T8D □	1.0

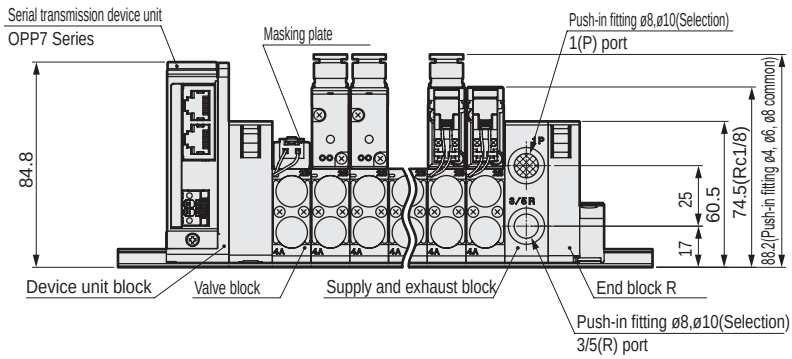

MEMO

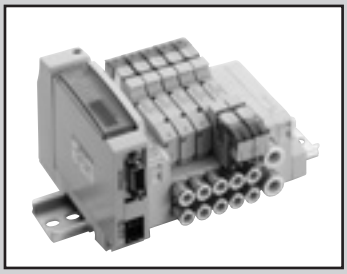

Reduced wiring block manifold
Base piping

MN4GE1/2-T* Series

● Cylinder bore size: ø20 to ø80

RoHS CAD

JIS symbol

● Two 3-port valves integrated
(A side valve: NC, B side valve: NC)

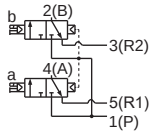

● 5-port valve

2-position single

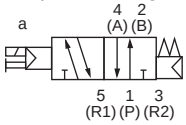

2-position double

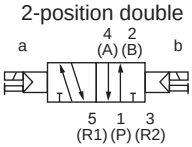

3-position all ports closed

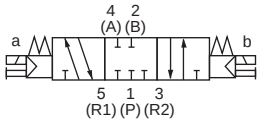

3-position A/B/R connection

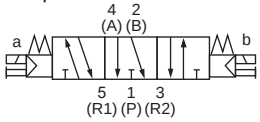

3-position P/A/B connection

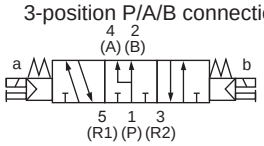

Manifold common specifications

Item	Description
Manifold	Block manifold
Mounting method	DIN rail mount
Supply and exhaust method	Common supply/common exhaust (With internal exhaust check valve)
Pilot exhaust method	Main valve/pilot valve common exhaust (Pilot exhaust check valve built-in)
Piping direction	Lateral direction from base
Valve and operation	Pilot operated soft spool valve
Working fluid	Compressed air
Max. working pressure MPa	0.7 (≈100 psi, 7 bar)
Min. working pressure MPa	0.2 (≈29 psi, 2 bar)
Proof pressure MPa	1.05 (≈150 psi, 10.5 bar)
Ambient temperature °C	-5 (23°F) to 55 (131°F) (no freezing)
Fluid temperature °C	5 (41°F) to 55 (131°F)
Manual override	Non-locking/locking common type
Lubrication (*1)	Not required
Degree of protection (*2)	Dust-proof
Vibration resistance m/s^2	50 or less
Shock resistance m/s^2	300 or less
Atmosphere	Cannot be used in corrosive gas environments

Electrical specifications

Item	Description		
	T1□, T30□, T5□		T6G1, T7□, T8□
Rated voltage V	24 DC	12 DC	24 DC
V fluctuation range (*3)	±10%		+10%, -5%
Holding current A	0.017	0.034	0.017
Power consumption W	0.4		
Thermal class	B		
Surge suppressor	Zener diode		
Indicator	LED		

*3: T6G1, T7□ and T8□ (serial transmission) may experience voltage drops due to internal circuitry, so care should be taken when regulating voltages.

*1: Use turbine oil Class 1 ISO VG32 for lubrication. Excessive or intermittent lubrication results in unstable operation.
*2: Dust-proof degree of protection. Not drip-proof. Avoid dripping water or oil, etc., during use.

Individual specifications

Item		MN3GE1/MN4GE1									
		T10	T11	T30	T50	T51	T52	T53	T6G1	T7*1	T8*1/2
Max. station No.	Standard wiring	16 stations	24 stations	24 stations	16 stations	18 stations	8 stations	24 stations	16 stations	8/16 stations	16/24 stations
	Double wiring	8 stations	12 stations	12 stations	8 stations	9 stations	4 stations	12 stations	8 stations	4/8 stations	8/16 stations
Max. number of solenoids		16 points	24 points	24 points	16 points	18 points	8 points	24 points	16 points	8/16 points	16/32 points
Port size	A/B port	Push-in fitting ø4, ø6									
	P/R Port	Push-in fitting ø6, ø8									

· For weight, refer to page 650.

Item		MN3GE2/MN4GE2									
		T10	T11	T30	T50	T51	T52	T53	T6G1	T7*1	T8*1/2
Max. station No.	Standard wiring	16 stations	20 stations	20 stations	16 stations	18 stations	8 stations	20 stations	16 stations	8/16 stations	16/20 stations
	Double wiring	8 stations	12 stations	12 stations	8 stations	9 stations	4 stations	12 stations	8 stations	4/8 stations	8/16 stations
Max. number of solenoids		16 points	24 points	24 points	16 points	18 points	8 points	24 points	16 points	8/16 points	16/32 points
Port size	A/B port	Push-in fitting ø4, ø6, ø8									
	P/R Port	Push-in fitting ø8, ø10									

· For weight, refer to page 650.

Flow characteristics

Model No.	Solenoid position		P→A/B		A/B→R			
			C[dm^3/(s·bar)]	b	C[dm^3/(s·bar)]		b	
MN3GE1 MN4GE1	Two 3-port valves integrated		0.86	0.35	1.0	(0.66)	0.15	(0.25)
	2-position		1.0	0.30	1.1	(0.72)	0.11	(0.26)
	3-position	All ports closed	0.96	0.32	1.0	-	0.14	-
		ABR connection	0.96	0.29	1.2	(0.71)	0.11	(0.30)
		PAB connection	1.1	0.31	1.0	-	0.15	-
MN3GE2 MN4GE2	Two 3-port valves integrated		1.7	0.42	2.2	(1.6)	0.15	(0.19)
	2-position		2.4	0.35	2.5	(1.7)	0.19	(0.19)
	3-position	All ports closed	2.2	0.38	2.3	-	0.17	-
		ABR connection	2.2	0.38	2.5	(1.7)	0.18	(0.20)
		PAB connection	2.3	0.29	2.3	-	0.15	-

*1: Effective cross-sectional area S and sonic conductance C are converted as S ≈ 5.0 x C.
*2: Values in ( ) are with the exhaust check valve.

Reduced wiring specifications

Item	T10	T11	T30	T50	T51	T52	T53
Type	Common terminal block M3 thread	Common terminal block Clamping method	D-sub-connector	20-pin flat cable connector (with power supply terminal)	20-pin flat cable connector, no power supply terminal	10-pin flat cable connector, no power supply terminal	26-pin flat cable connector, no power supply terminal
Connector	—	—	D-sub-connector 25-pin	MIL-C-83503 standard compliant pressure welding socket 20-pin	MIL-C-83503 standard compliant pressure welding socket 20-pin	MIL-C-83503 standard compliant pressure welding socket 10-pin	MIL-C-83503 standard compliant pressure welding socket 26-pin

Serial transmission device unit specifications

Download the communication setting file from the CKD website (https://www.ckd.co.jp/en/).

Item		T6G1
Network name		CC-Link ver. 1.10
Power supply voltage	Unit side	24 VDC ±10%
	Valve side	24 VDC 10%, −5%
Current consumption	Unit side	100 mA or less (when all output points are ON)
	Valve side	15 mA or less (when all output points are OFF)
	Communication side	—
No. of output points		16 points
Occupied number		1 station
Operation display		LED (power supply and communication status)
Output		NPN

Item		T7G1	T7L1*1	T7D1	T7S1	T7SP1
Network name		CC-Link ver. 1.10	SAVE NET	DeviceNet*2	CompoNet	
Power supply voltage	Unit side / Valve side	24 VDC 10%, −5% Common power supply terminal				
	Communication side	—	—	11 to 25 VDC *3	14.0 to 26.4 VDC	
Current consumption	Unit side	110 mA or less (when all output points are ON) Load current is not included			40 mA or less (when all output points are ON) Load current is not included	
	Valve side					
	Communication side	—	—	50 mA or less	65 mA or less (all points ON:24 VDC) 95 mA or less (all points ON:14 VDC)	
No. of output points		16 points	16 points	16 points	16 points	
Occupied number		1 station	1 station	2 bytes	Word device 1 node (16 points)	
Operation display		LED (power supply and communication status)				
Output		NPN			NPN	PNP

Item		T8G1 T8G2	T8GP1 T8GP2	T8P1 T8P2	T8PP1 T8PP2	T8EC1 T8EC2	T8ECP1 T8ECP2	T8EN1 T8EN2	T8ENP1 T8ENP2	T8D1 T8D2	T8DP1 T8DP2	T8EB1 T8EB2	T8EBP1 T8EBP2	T8EP1 T8EP2	T8EPP1 T8EPP2
Communication protocol		CC-Link ver. 1.10		PROFIBUS-DP (V0)		EtherCAT		EtherNet/IP		DeviceNet		CC-Link IEF Basic		PROFINET	
Power supply voltage	Unit side	24 VDC ±10%								11 to 25 VDC		24 VDC ±10%			
	Valve side	24 VDC+10%, -5%													
Current consumption	Unit side	60 mA or less (when all output points are ON)		60 mA or less (when all output points are ON)		110 mA or less (when all output points are ON)		120 mA or less (when all output points are ON)		70 mA or less (when all output points are ON)		130 mA or less (when all output points are ON)		130 mA or less (when all output points are ON)	
	Valve side	T8 □ 1: 15 mA or less T8 □ 2: 20 mA or less (When all output points are ON) Load current is not included								15 mA or less (When all output points are ON) Load current is not included					
No. of output points		T8 □ 1:16-point T8 □ 2: 32 points													
Occupied number		1 station													
Operation display		LED (power supply and communication status)													
Output		NPN output	PNP output	NPN output	PNP output	NPN output	PNP output	NPN output	PNP output	NPN output	PNP output	NPN output	PNP output	NPN output	PNP output

*1 Transmission bit rate of 128 bits and half-duplex transmission method are supported. Contact CKD for other specifications.
*2 Also compatible with DeviceNet compliant networks (DLNK, etc.)
*3 The communication power supply (V+, V- on the DeviceNet cable) is insulated from the power supply terminal (unit power supply/valve power supply).

MN4GE1/2-T* Series

Reduced wiring block manifold; base piping

How to order

Manifold model No.

MN4GE1 1 0R - C6 - T30 W H - 10 - 3

3-port manifold model No.

MN3GE1 66 0R - C6 - T30 W H - 10 - 3

Discrete valve block with solenoid valve

N4GE1 1 0R - C6 - A2N *1 H — 3

Discrete 3-port valve block with solenoid valve

N3GE1 66 0R - C6 - A2N *1 H — 3

Discrete solenoid valve

4GE1 1 9R - 00 - A2N H — 3

Discrete 3-port solenoid valve

3GE1 66 9R - 00 - A2N H — 3

- A Model No.
- B Solenoid position
- C Port size (*1) (*2) (*3) (*4)
- D Reduced wiring connection, serial transmission
- E Terminal/connector pin array
- F Option
- G Station No.
- H Voltage

A Model No.	Manifold: Two 3-port valves integrated MN3GE1	Manifold: Two 3-port valves integrated MN3GE2	Manifold: 5-port valve MN4GE1	Manifold: 5-port valve MN4GE2	Discrete valve block with solenoid valve: Discrete solenoid valve (N)3GE1	Discrete valve block with solenoid valve: Discrete solenoid valve (N)3GE2	Discrete valve block with solenoid valve: Discrete solenoid valve (N)4GE1	Discrete valve block with solenoid valve: Discrete solenoid valve (N)4GE2

B Solenoid position

1	2-position single				●	●			●	●
2	2-position double				●	●			●	●
3	3-position all ports closed				●	●			●	●
4	3-position ABR connection				●	●			●	●
5	3-position PAB connection				●	●			●	●
66	Two 3-port valves integrated (*5) (*6)	A side valve: Normally closed B side valve: Normally closed	●	●			●	●		
8	Mix manifold (when there are multiple solenoid positions)		●	●	●	●	●	●	●	●

C Port size (A/B-port)

Model									
C4	ø4 push-in fitting		●	●	●	●	●	●	●	●
C6	ø6 push-in fitting		●	●	●	●	●	●	●	●
C8	ø8 push-in fitting			●		●		●		●
CL4	ø4 push-in L-fitting (upward)		●		●		●		●	
CL6	ø6 push-in L-fitting (upward)		●	●	●	●	●	●	●	●
CL8	ø8 push-in L-fitting (upward)			●		●		●		●
CD4	ø4 push-in L-fitting (downward)		●		●		●		●	
CD6	ø6 push-in L-fitting (downward)		●	●	●	●	●	●	●	●
CD8	ø8 push-in L-fitting (downward)			●		●		●		●
CX	Push-in fitting mix (*7)		●	●	●	●				
General purpose plug specs	A port	B port								
C4NC	ø4 push-in fitting	Plug			●	●			●	●
C6NC	ø6 push-in fitting	Plug			●	●			●	●
C8NC	ø8 push-in fitting	Plug				●				●
C4NO	Plug	ø4 push-in fitting			●	●			●	●
C6NO	Plug	ø6 push-in fitting			●	●			●	●
C8NO	Plug	ø8 push-in fitting				●				●
CL4NC	Radial ø4 push-in upward	Plug			●				●	
CL6NC	Radial ø6 push-in upward	Plug			●	●			●	●
CL8NC	Radial ø8 push-in upward	Plug				●				●
CL4NO	Plug	Radial ø4 push-in upward			●				●	
CL6NO	Plug	Radial ø6 push-in upward			●	●			●	●
CL8NO	Plug	Radial ø8 push-in upward				●				●
CD4NC	Radial ø4 push-in downward	Plug			●				●	
CD6NC	Radial ø6 push-in downward	Plug			●	●			●	●
CD8NC	Radial ø8 push-in downward	Plug				●				●
CD4NO	Plug	Radial ø4 push-in downward			●				●	
CD6NO	Plug	Radial ø6 push-in downward			●	●			●	●
CD8NO	Plug	Radial ø8 push-in downward				●				●
00	Discrete valve for mounting base						●	●	●	●

D Reduced wiring connection, serial transmission

Refer to the next page for reduced wiring and serial transmission.

E Terminal/connector pin array

Blank	Standard wiring (*8)		●	●	●	●	●	●	●	●
W	Double wiring (*8)		●	●	●	●	●	●	●	●

F Option

Blank	Non-locking/locking common manual override	●	●	●	●	●	●	●	●
H	With exhaust check valve (*9)	●	●	●	●	●	●	●	●
A	Ozone/coolant proof	●	●	●	●	●	●	●	●
F	A/B port filter built in (*10)	●	●	●	●	●	●	●	●
Z1	Air supply spacer (*11)	●	●	●	●				
Z3	Exhaust spacer (*11)	●	●	●	●				

G Station No.

1	1 station	●	●	●	●				
to	to								
24	24 stations (Max. station number for MN4GE2 is 20.)								

H Voltage

3	24 VDC	●	●	●	●	●	●	●	●
4	12 VDC	●	●	●	●	●	●	●	●

is not available.

Precautions for model selection

*1 A and B port plug specifications are available for the 2-position single only. Specify the P/R port bore size with the supply and exhaust block model No. in the manifold specifications sheet.

2 CL push-in L fitting is compatible only with the single solenoid manifold. Long elbow is for A port and short elbow for B port.

*3 A and B ports are the same size for push-in L fitting mix (CX).

*4 For a discrete solenoid valve, select "00" for Port size.

*5 Select MN4GE*80R when mixing with 4, 5-port valves. Further, select MN3GE*80R when mixing with masking plate.

*6 Dimensions are the same as the respective 2-position double solenoid.

*7 The push-in fitting cannot be mixed with the discrete valve's 4(A) or 2(B) port.

*8 Blank...The wiring will be based on the type of valve used.
W*...All wired for double solenoid valves regardless of the type of valve used.

*9 3-position all ports closed and PAB connection are not provided with the exhaust check valve specifications (H). Refer to page 851 for details on the exhaust check valve.

*10 A filter is built into the P-port as standard.

*11 Specify the spacer mounting position/ quantity in manifold specifications sheet. Stacking of spacers is not possible. Combination with the masking plate is not supported. Cannot be selected together with push-in L fitting (upward). Refer to pages 679 to 682 for details.

[Port size/wiring method list]

			Ⓐ Model No.							
			Manifold				Discrete valve block with solenoid valve			
			Two 3-port valves integrated		5-port valve		Discrete solenoid valve			
			MN3GE1	MN3GE2	MN4GE1	MN4GE2	(N)3GE1	(N)3GE2	(N)4GE1	(N)4GE2
Ⓒ Reduced wiring (lamp and surge suppressor provided as standard) 12/24 VDC										
T10	Common terminal block (M3 thread)	Left-side spec	●	●	●	●				
T10R		Right-side spec	●	●	●	●				
T11	Common terminal block (clamping)	Left-side spec	●	●	●	●				
T11R		Right-side spec	●	●	●	●				
T30	D-sub-connector	Left-side spec	●	●	●	●				
T30R		Right-side spec	●	●	●	●				
T50	20-pin flat cable connector (with power supply terminal)	Left-side spec	●	●	●	●				
T50R		Right-side spec	●	●	●	●				
T51	20-pin flat cable connector (without power supply terminal)	Left-side spec	●	●	●	●				
T51R		Right-side spec	●	●	●	●				
T52	10-pin flat cable connector (without power supply terminal)	Left-side spec	●	●	●	●				
T52R		Right-side spec	●	●	●	●				
T53	26-pin flat cable connector (without power supply terminal)	Left-side spec	●	●	●	●				
T53R		Right-side spec	●	●	●	●				
Ⓓ Serial transmission (lamp/surge suppressor provided as standard) 24 VDC										
T6G1	CC-Link	NPN 16 points	●	●	●	●				
T7D1	DeviceNet	NPN 16 points	●	●	●	●				
T7G1	CC-Link	NPN 16 points	●	●	●	●				
T7L1	SAVE NET	NPN 16 points	●	●	●	●				
T7S1	CompoNet	NPN 16 points	●	●	●	●				
T7SP1		PNP 16 points	●	●	●	●				
T8G1	CC-Link	NPN 16 points	●	●	●	●				
T8G2		NPN 32 points	●	●	●	●				
T8GP1		PNP 16 points	●	●	●	●				
T8GP2		PNP 32 points	●	●	●	●				
T8P1	PROFIBUS-DP	NPN 16 points	●	●	●	●				
T8P2		NPN 32 points	●	●	●	●				
T8PP1		PNP 16 points	●	●	●	●				
T8PP2		PNP 32 points	●	●	●	●				
T8EC1	EtherCAT	NPN 16 points	●	●	●	●				
T8EC2		NPN 32 points	●	●	●	●				
T8ECP1		PNP 16 points	●	●	●	●				
T8ECP2		PNP 32 points	●	●	●	●				
T8EN1	EtherNet/IP	NPN 16 points	●	●	●	●				
T8EN2		NPN 32 points	●	●	●	●				
T8ENP1		PNP 16 points	●	●	●	●				
T8ENP2		PNP 32 points	●	●	●	●				
T8D1	DeviceNet	NPN 16 points	●	●	●	●				
T8D2		NPN 32 points	●	●	●	●				
T8DP1		PNP 16 points	●	●	●	●				
T8DP2		PNP 32 points	●	●	●	●				
T8EB1	CC-Link IEF Basic	NPN 16 points	●	●	●	●				
T8EB2		NPN 32 points	●	●	●	●				
T8EBP1		PNP 16 points	●	●	●	●				
T8EBP2		PNP 32 points	●	●	●	●				
T8EP1	PROFINET	NPN 16 points	●	●	●	●				
T8EP2		NPN 32 points	●	●	●	●				
T8EPP1		PNP 16 points	●	●	●	●				
T8EPP2		PNP 32 points	●	●	●	●				
A2N	Without lead wire (without socket)	with surge suppressor and indicator lamp					●	●	●	●

Ozone-proof specifications • Coolant proof specifications

Can be selected with "How to order" Item Ⓕ option "A" on page 648.

Specifications for rechargeable battery (Catalog No. CC-1226A)

● For use in the rechargeable battery manufacturing process, materials used for air path and sliding section are limited

** - Voltage - **P4**

CE marking specifications

** - Voltage - **ST**

• Standard voltage of 24 VDC or less is CE marking-compatible even if the model No. is not indicated with "ST".

Manifold components explanation and parts list

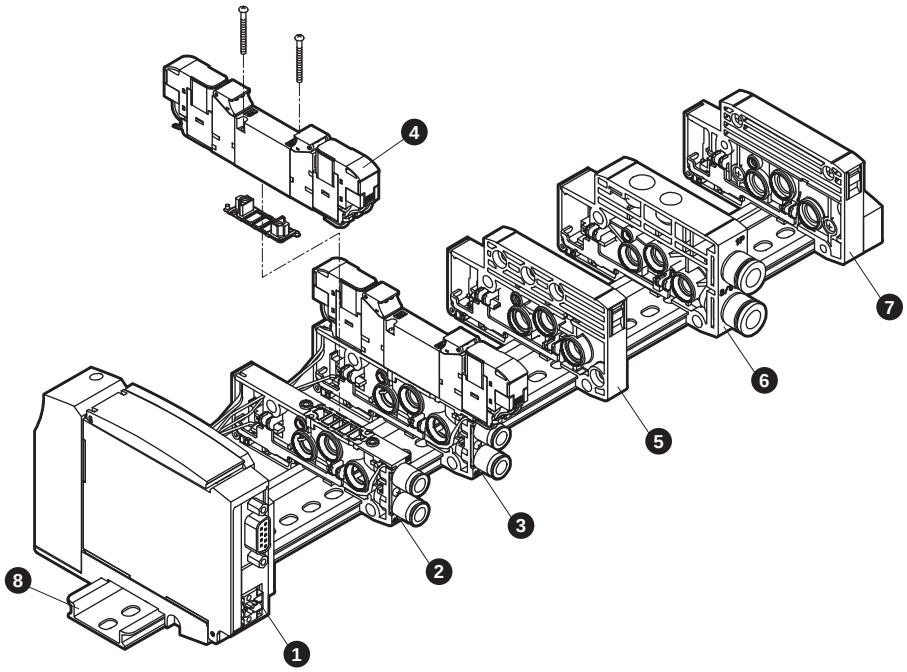

List of main components (refer to pages 668 to 682 for details)

No.	Component name	Model No. (example)	No.	Component name	Model No. (example)
1	Wiring block (*)	N4G1R-T8P1	5	Partition block	N4G1R-S
2	Discrete valve block	N4GB1R-V2-C6	6	Supply and exhaust block	N4G1R-Q-8
3	Discrete valve block with solenoid valve	N4GE120R-C6-A2NH-3	7	End block R	N4G1R-ER
4	Solenoid valve body	4GE129R-00-A2NH-3	8	DIN rail	N4GR-BAA (Length)

(Note) Wiring block cannot be ordered as a single item.

E type reduced wiring weight

4GE1

(g)

Part name	Model No.	Weight	Part name	Model No.	Weight	Part name	Model No.	Weight
Valve block with solenoid valve	N4GE110R-C6-A2N-3	70	End block	N4G1R-E*	60	Wiring block	N4G1R-T10(R)	207
	N4GE120R-C6-A2N-3	88		N4G1R-EX*	60		N4G1R-T30(R)	165
	N4GE1$\frac{3}{5}$0R-C6-A2N-3	89	Partition block	N4G1R-S	45		N4G1R-T50(R)	167
	N3GE1660R-C6-A2N-3	88	Valve block (for single)	N4GB1R-V1-C*	33		N4G1R-T6G1	285
Valve block with masking plate	N4GB1R-MP*-C6	37	Valve block (for double/3-position)	N4GB1R-V2-C*	35		N4G1R-T7*	203
Supply and exhaust block	N4G1R-Q-8	58	DIN rail	N4GR-BAA*	0.19/mm		N4G1R-T8*	229

(Note) Wiring block cannot be ordered as a single item.

4GE2

(g)

Part name	Model No.	Weight	Part name	Model No.	Weight	Part name	Model No.	Weight
Valve block with solenoid valve	N4GE210R-C8-A2N-3	134	End block	N4G2R-E*	84	Wiring block	N4G2R-T10(R)	223
	N4GE220R-C8-A2N-3	151		N4G2R-EX*	85		N4G2R-T30(R)	182
	N4GE2$\frac{3}{5}$0R-C8-A2N-3	162	Partition block	N4G2R-S	60		N4G2R-T50(R)	184
	N3GE2660R-C8-A2N-3	151	Valve block (for single)	N4GB2R-V1-C*	55		N4G2R-T6G1	312
Valve block with masking plate	N4GB2R-MP*-C8	69	Valve block (for double/3-position)	N4GB2R-V2-C*	57		N4G2R-T7*	244
Supply and exhaust block	N4G2R-Q-10	83	DIN rail	N4GR-BAA*	0.19/mm		N4G2R-T8*	242

(Note) Wiring block cannot be ordered as a single item.

Parts list

Applicable	Part name	Model No.
Valve 4G1	Cartridge fitting ø4 straight	4G1R-JOINT-C4
	Cartridge fitting ø6 straight	4G1R-JOINT-C6
	Cartridge fitting ø4 (short) elbow	4G1R-JOINT-CL4
	Cartridge fitting ø4 long elbow	4G1R-JOINT-CLL4
	Cartridge fitting ø6 (short) elbow	4G1R-JOINT-CL6
	Cartridge fitting ø6 long elbow	4G1R-JOINT-CLL6
	Plug cartridge	4G1R-JOINT-CPG
Valve 4G2	Cartridge fitting ø4 straight	4G2R-JOINT-C4
	Cartridge fitting ø6 straight	4G2R-JOINT-C6
	Cartridge fitting ø8 straight	4G2R-JOINT-C8
	Cartridge fitting ø6 (short) elbow	4G2R-JOINT-CL6
	Cartridge fitting ø6 long elbow	4G2R-JOINT-CLL6
	Cartridge fitting ø8 (short) elbow	4G2R-JOINT-CL8
	Cartridge fitting ø8 long elbow	4G2R-JOINT-CLL8
	Plug cartridge	4G2R-JOINT-CPG

Applicable	Part name	Model No.
Common	Coil assembly	4GR-A2N-[*2]-COIL-[*3] *2: Ozone/coolant proof (blank, A) *3: Voltage (3, 4)
Manifold	Expansion socket assembly (details on page 837)	For a side solenoid N4GR-SOCKET-ASSY-[selection No.]
		For b side solenoid N4GR-RELAY-SOCKET-[selection No.]

Dimensions

MN4GE1

Note : The two 3-port valve integrated has the same dimensions as the double.

● Common terminal block (M3 thread) left side (T10)

Note : Clamping specifications (T11) is also available. Dimensions are the same as T10.

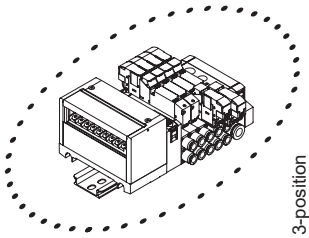

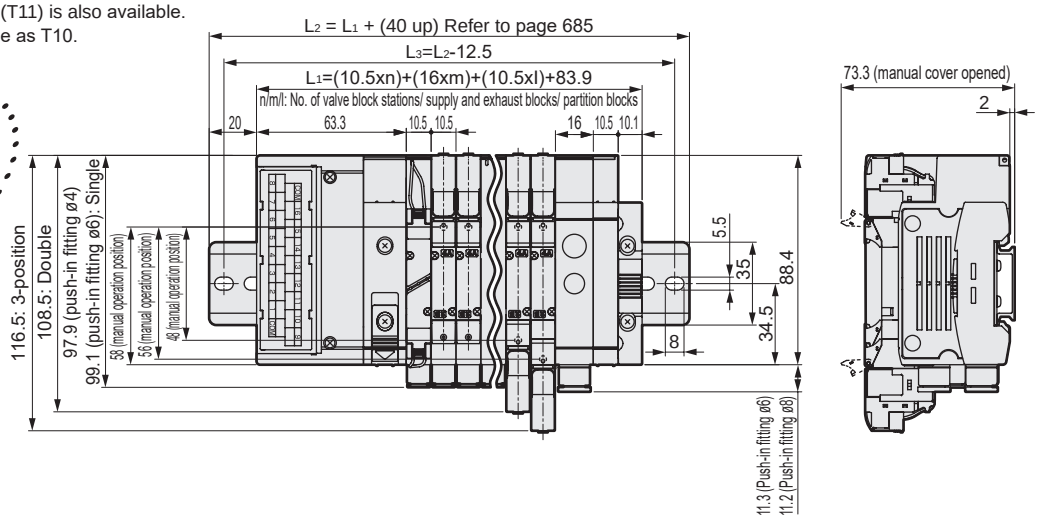

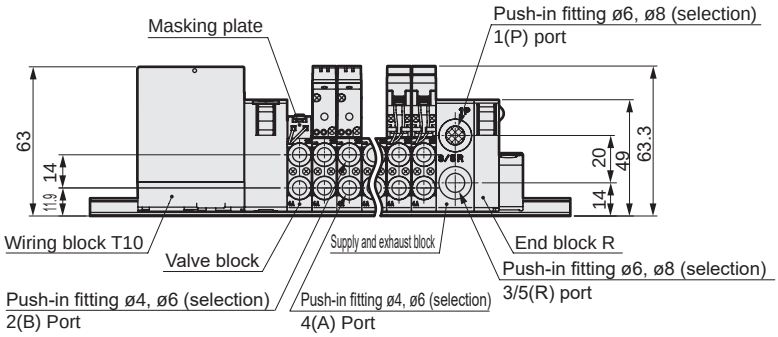

Note: Refer to page 660 for dimensions of the push-in L fitting.

● Common terminal block (M3 thread) right side (T10R)

Note : Clamping specifications type (T11R) is also available. Dimensions are the same as T10R.

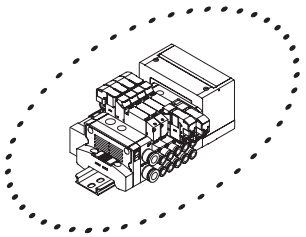

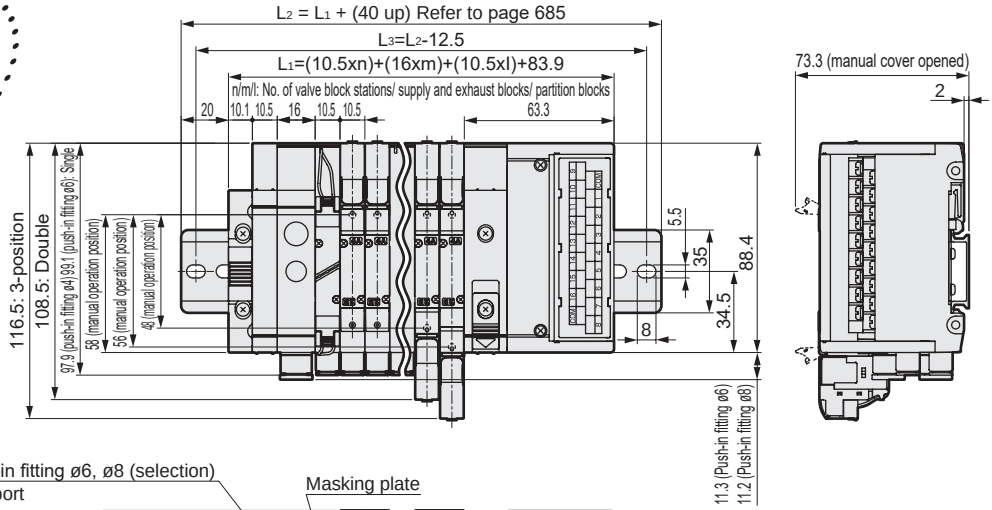

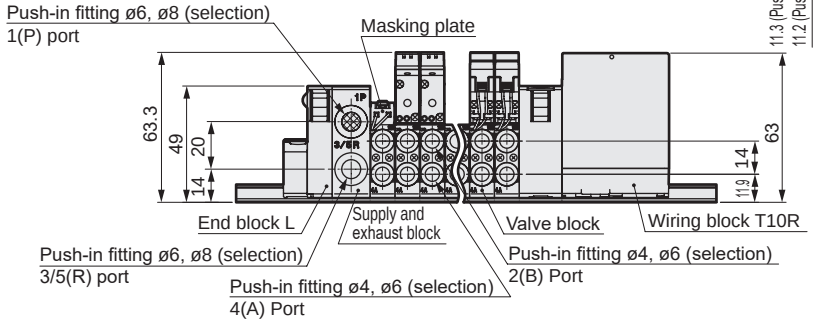

Dimensions CAD

MN4GE2

Note: The two 3-port valve integrated has the same dimensions as the double.

● Common terminal block (M3 thread) left side (T10)

Note: Clamping specifications (T11) is also available.
Dimensions are the same as T10.

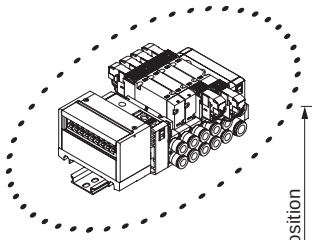

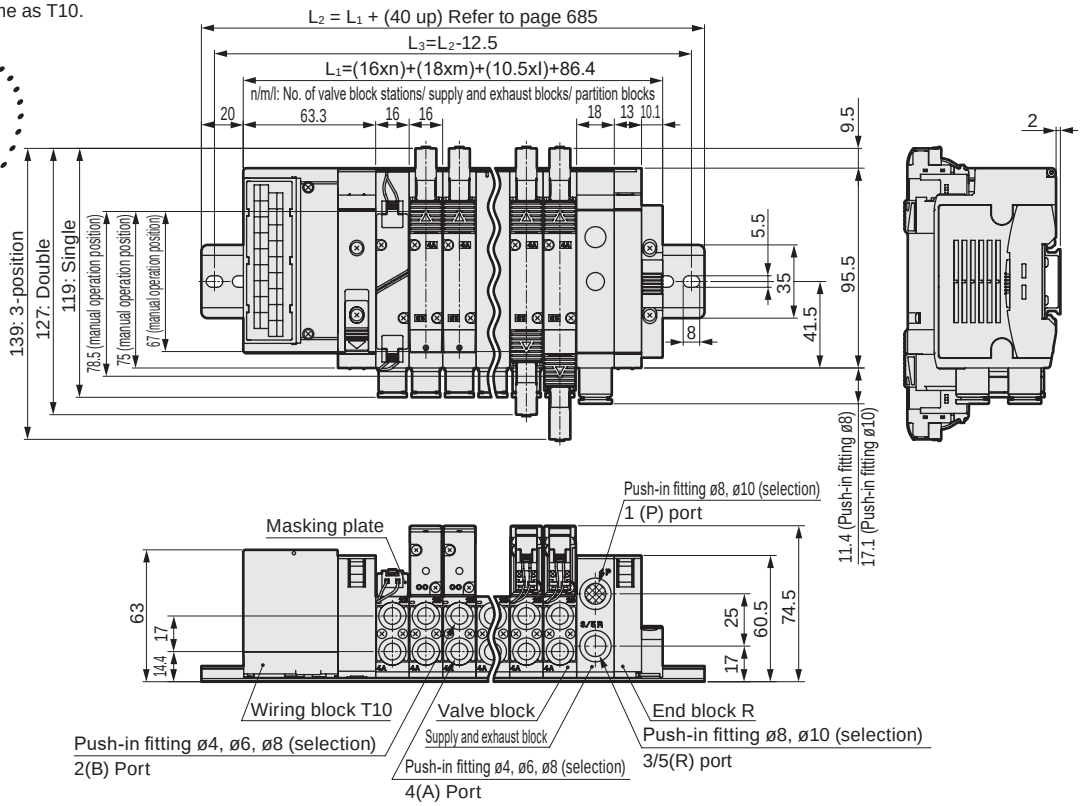

● Common terminal block (M3 thread) right side (T10R)

Note: Clamping specifications type (T11R) is also available.
Dimensions are the same as T10R.

Note: Refer to page 660 for dimensions of the push-in L fitting.

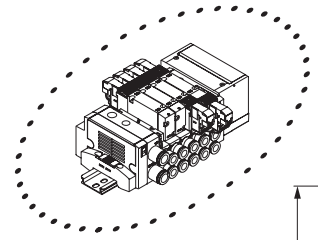

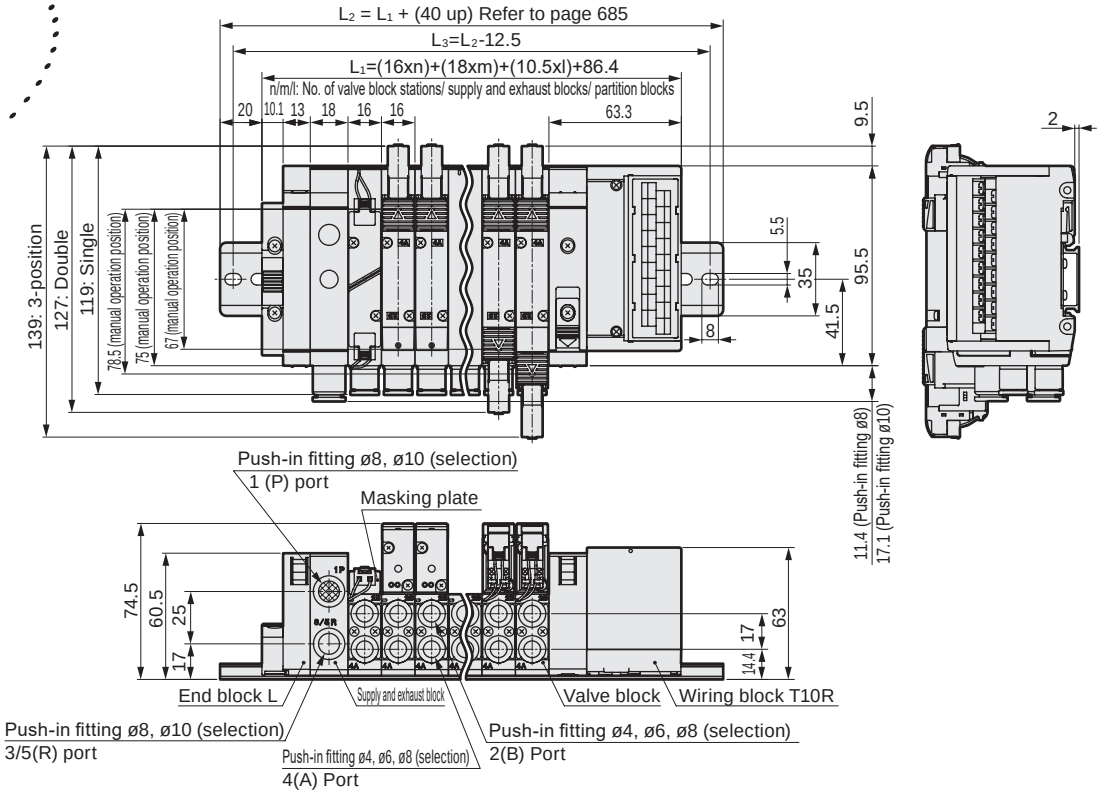

Dimensions CAD

MN4GE1

Note: The two 3-port valve integrated has the same dimensions as the double.

● D sub-connector left side (T30)

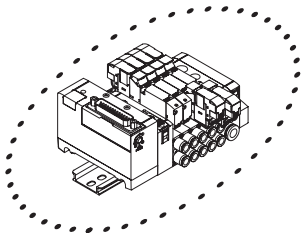

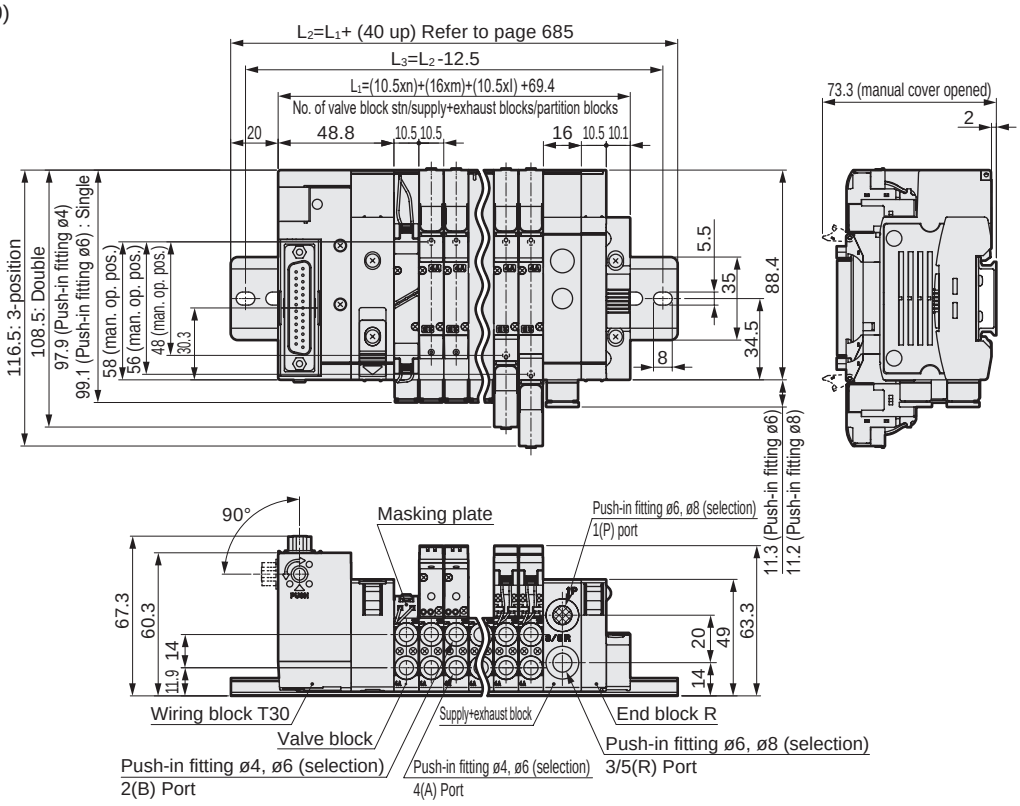

● D sub-connector right side (T30R)

Note: Refer to page 660 for dimensions of the push-in L fitting.

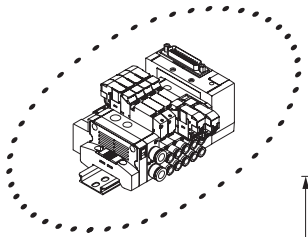

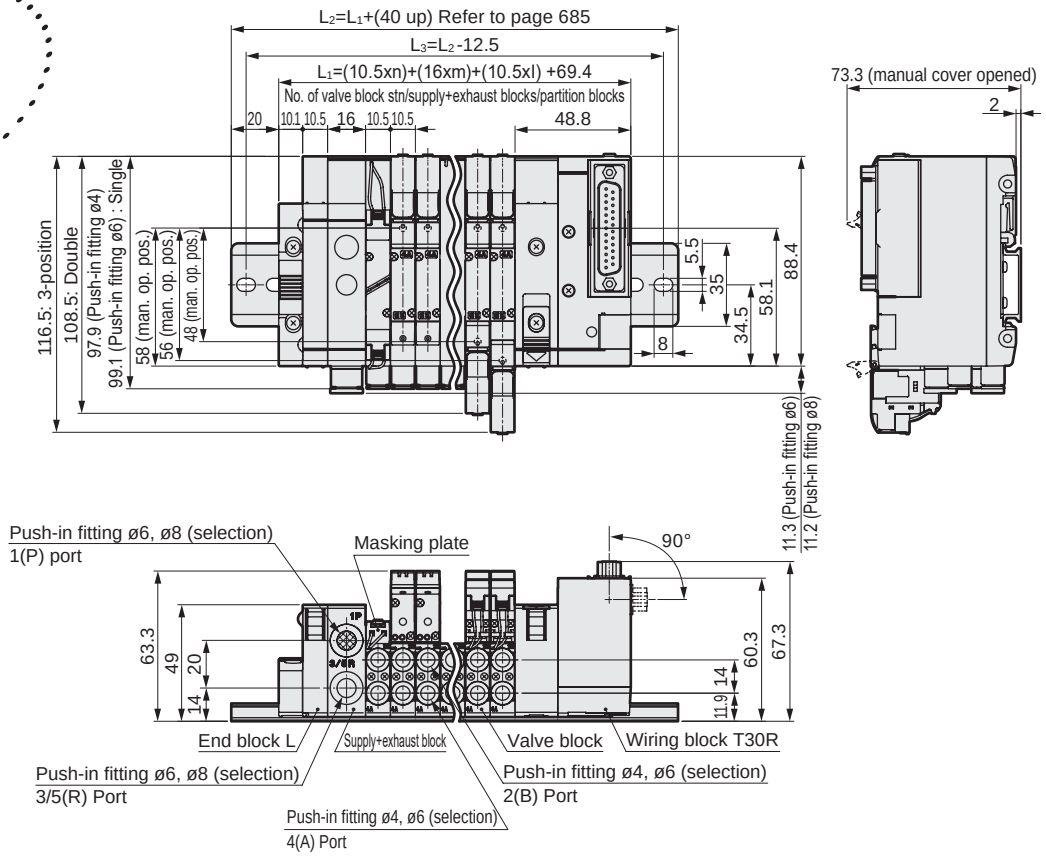

Dimensions CAD

MN4GE2

Note: The two 3-port valve integrated has the same dimensions as the double.

● D sub-connector left side (T30)

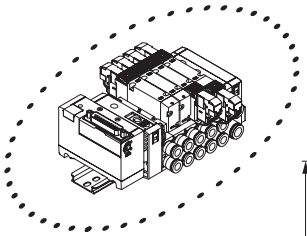

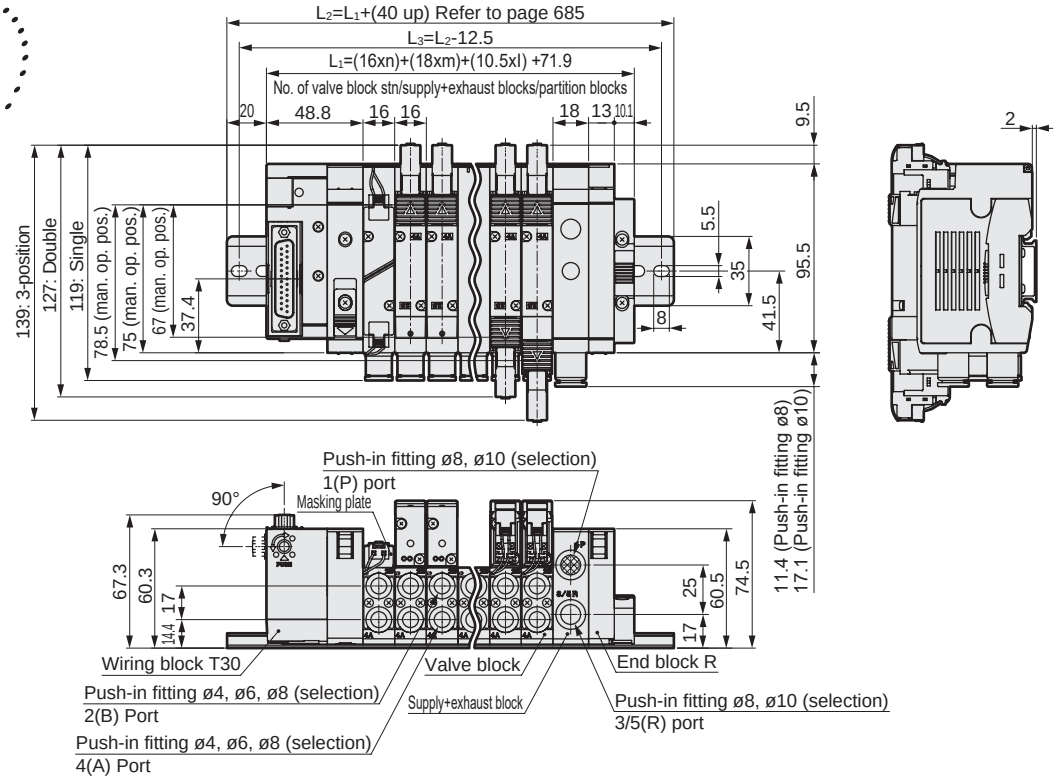

● D sub-connector right side (T30R)

Note: Refer to page 660 for dimensions of the push-in L fitting.

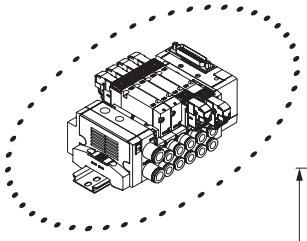

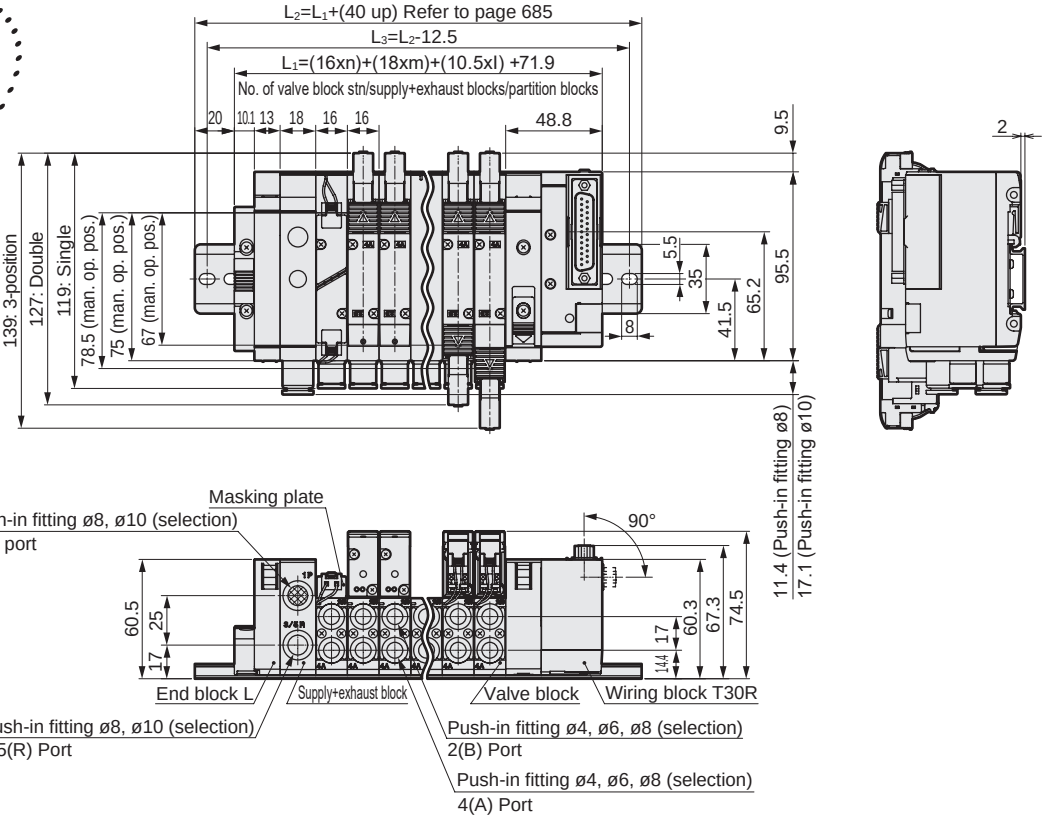

Dimensions CAD

MN4GE1

*1: T51, T52, and T53 are also available as flat cable connector. Dimensions are the same as T50.
*2: The two 3-port valve integrated has the same dimensions as the double.

● Flat cable connector left side (T50)
with power supply terminal

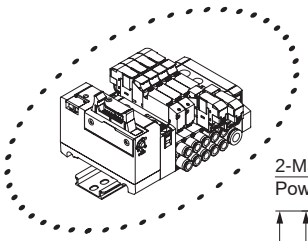

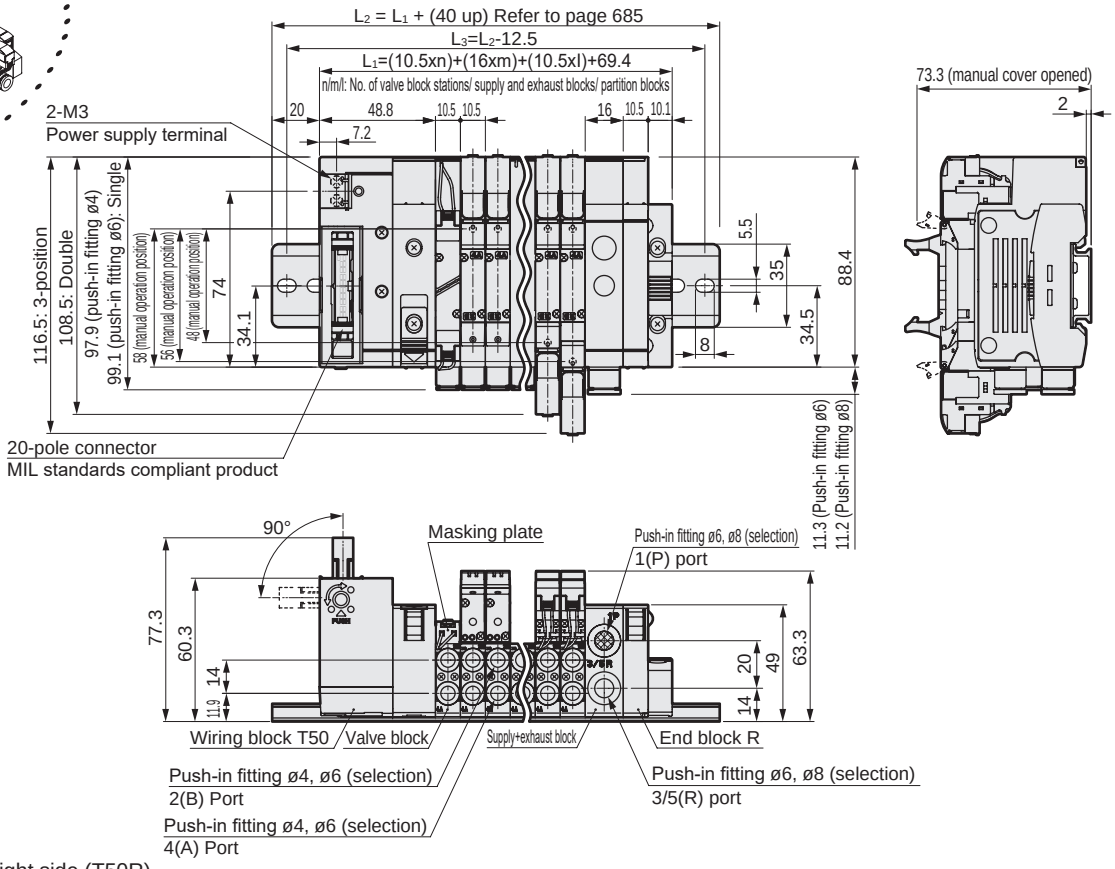

Note: Refer to page 660 for dimensions of the push-in L fitting.

● Flat cable connector right side (T50R)
with power supply terminal

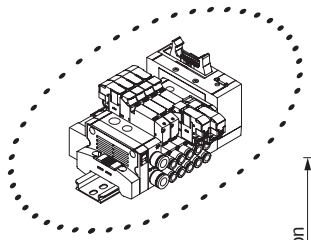

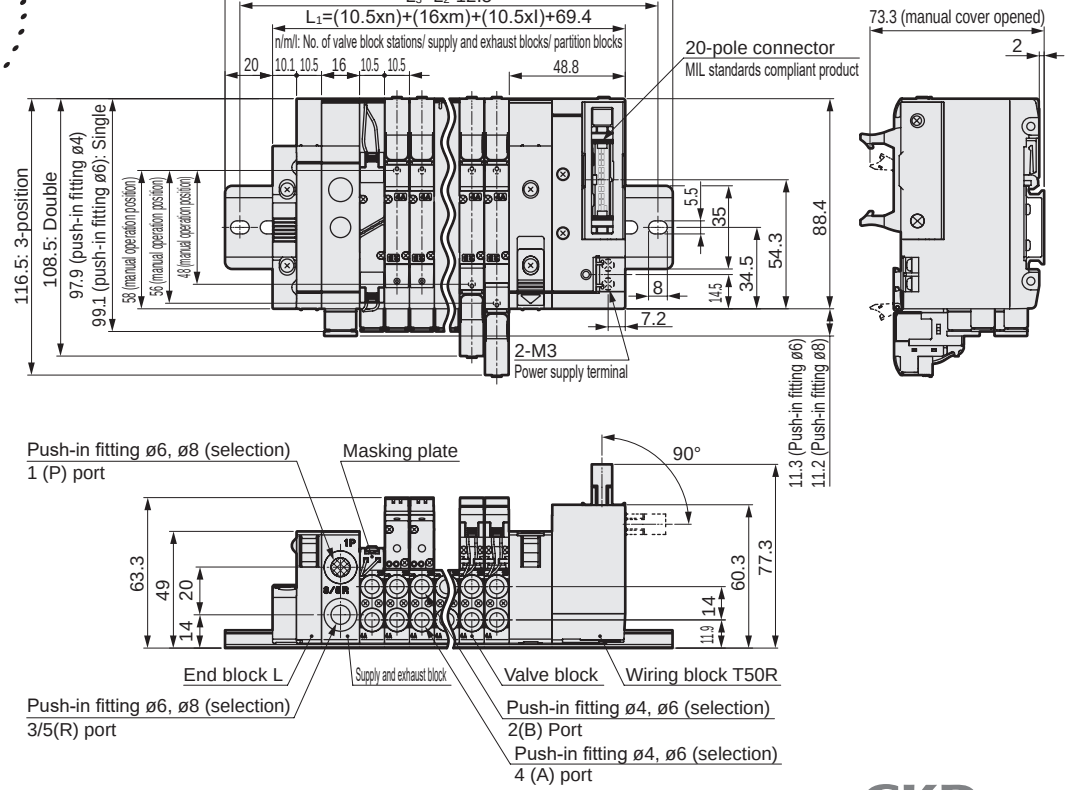

Dimensions CAD

MN4GE2

*1: T51, T52, and T53 are also available as flat cable connector. Dimensions are the same as T50.
*2: The two 3-port valve integrated has the same dimensions as the double.

● Flat cable connector left side with power supply terminal (T50)

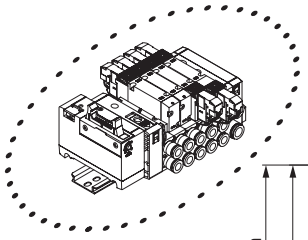

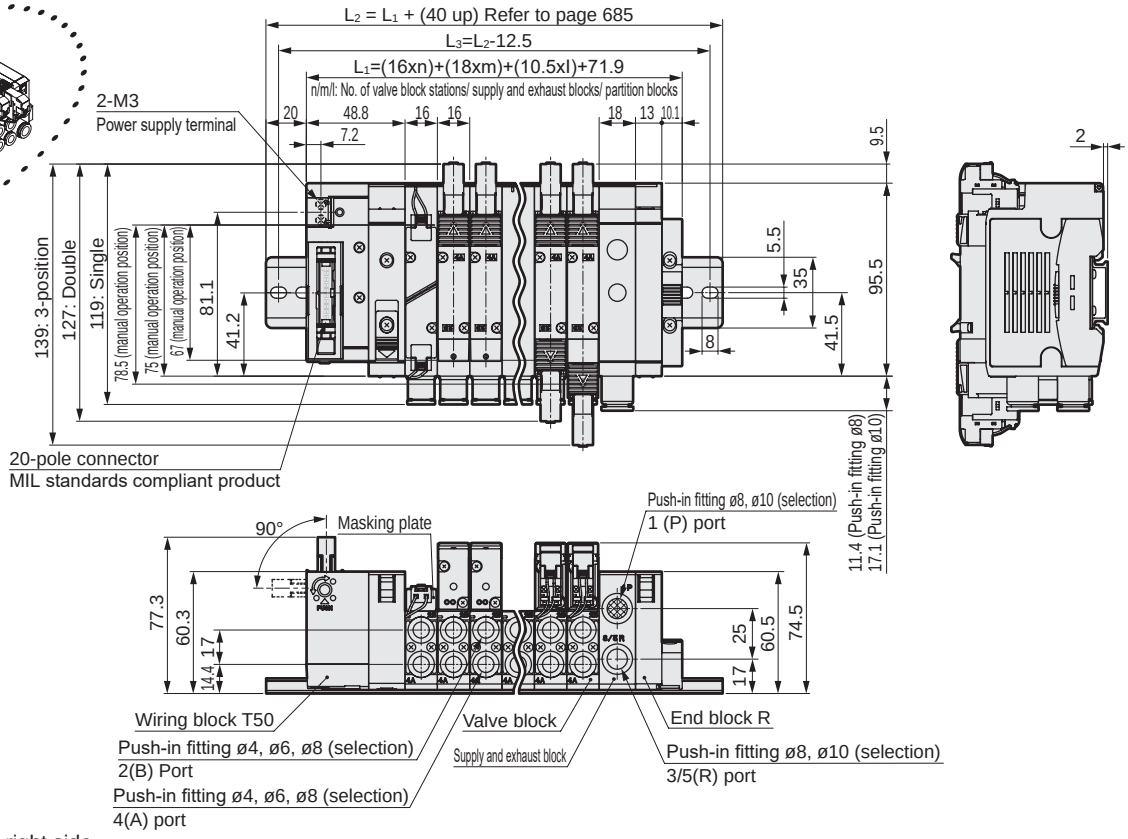

● Flat cable connector right side with power supply terminal (T50R)

Note: Refer to page 660 for dimensions of the push-in L fitting.

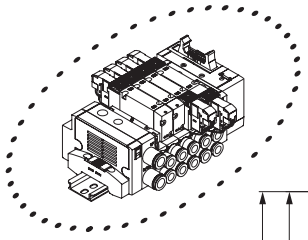

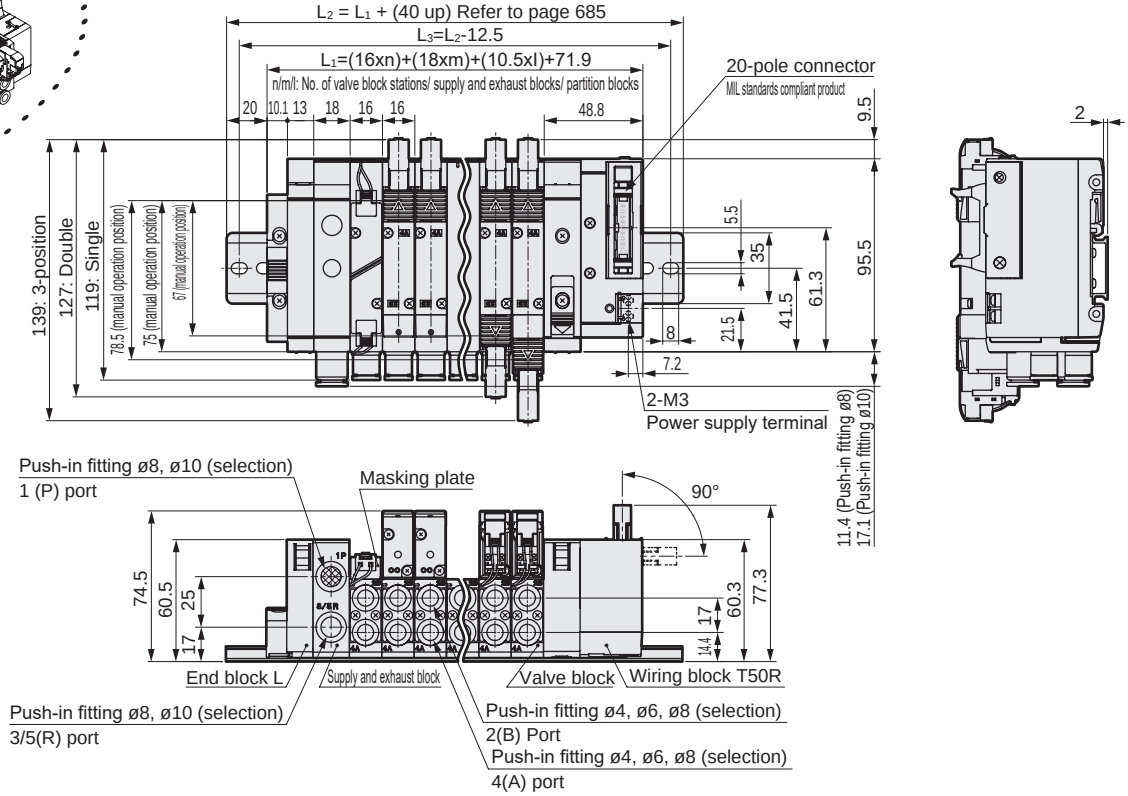

Dimensions CAD

MN4GE1

● Serial transmission (T6G1)

Note: The two 3-port valve integrated has the same dimensions as the double.

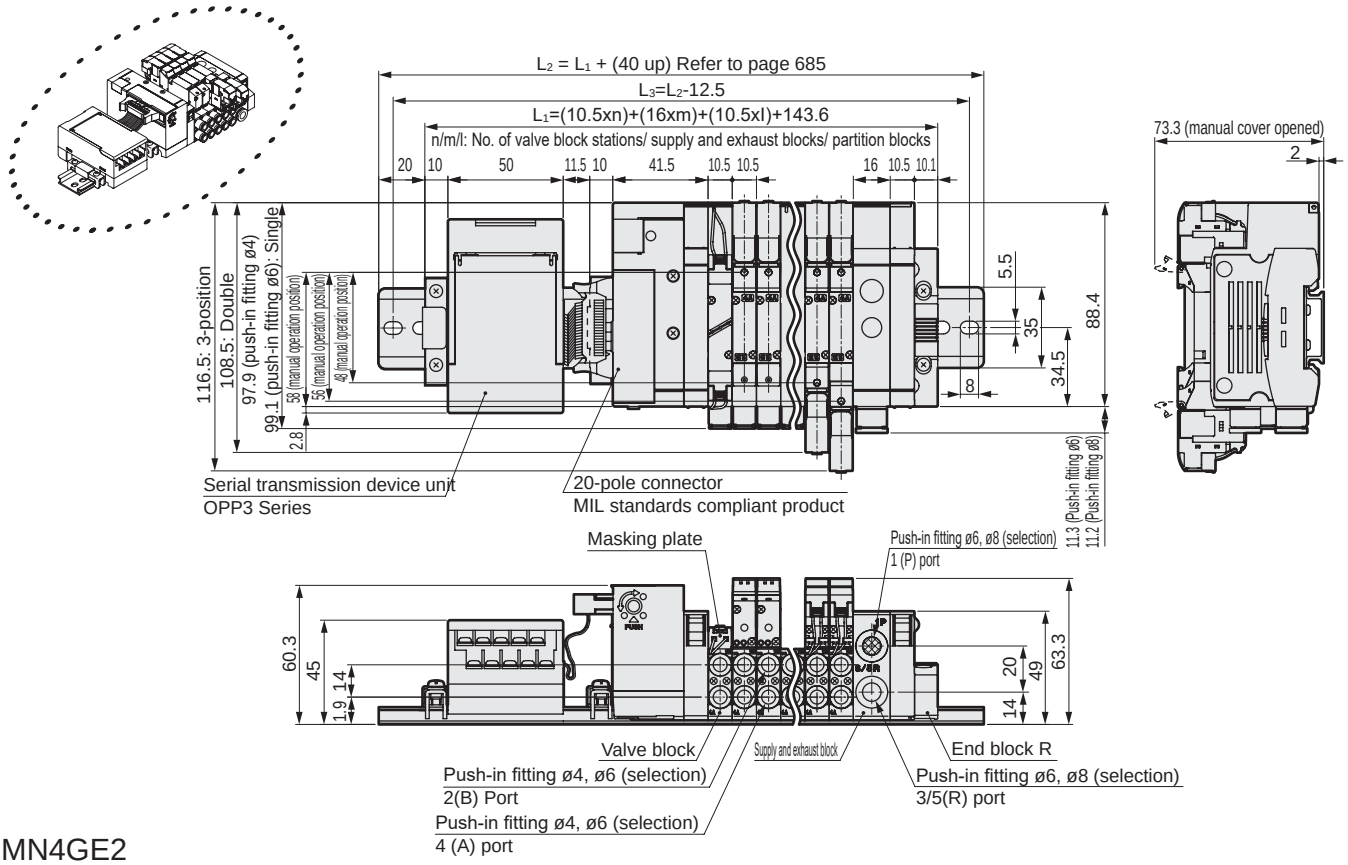

MN4GE2

● Serial transmission (T6G1)

Note: Refer to page 660 for dimensions of the push-in L fitting.

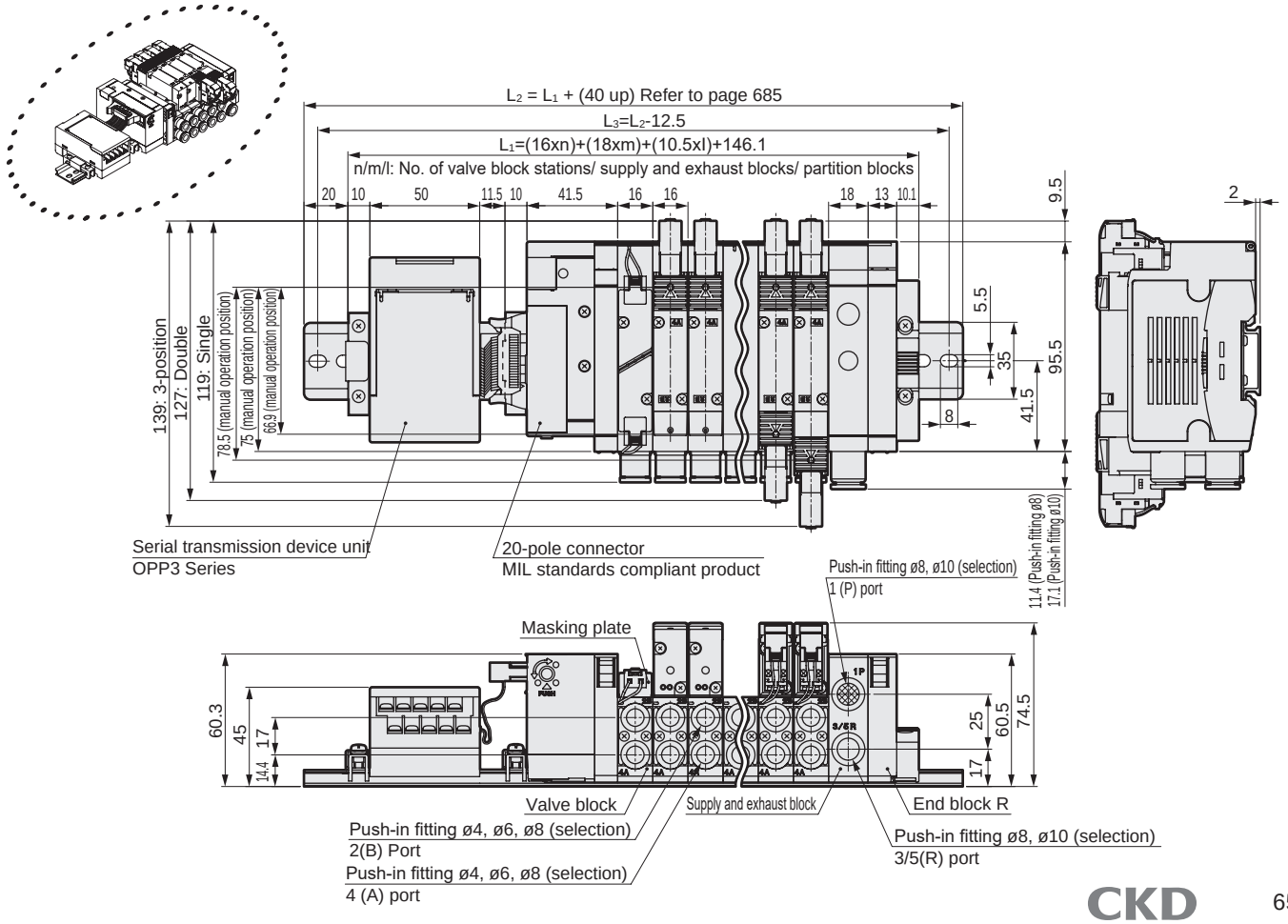

Dimensions CAD

MN4GE1

Note: The two 3-port valve integrated has the same dimensions as the double.

● Thin serial transmission (T7□)

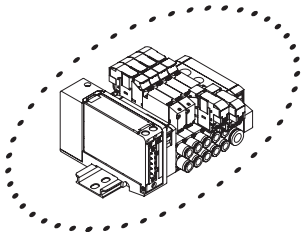

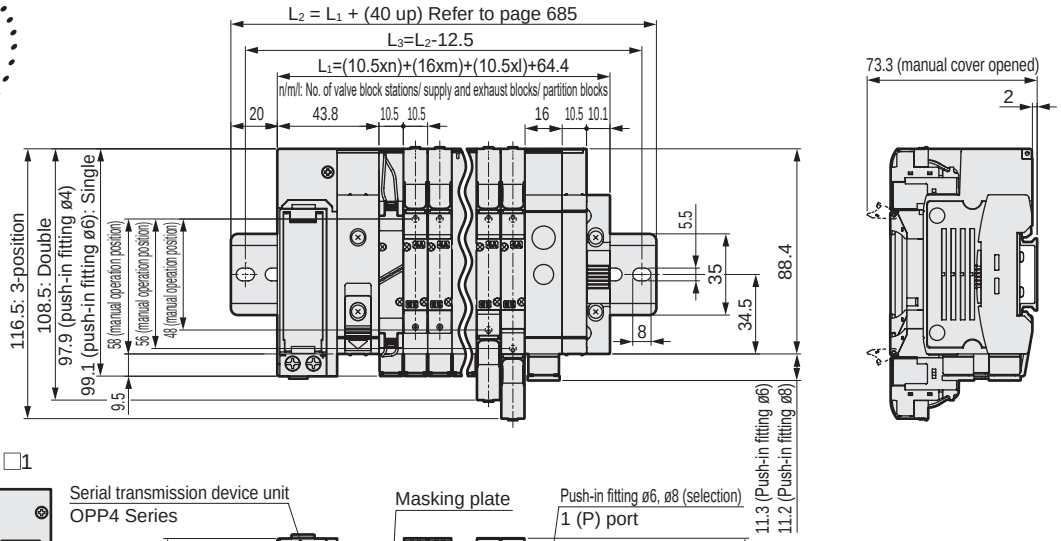

For T7S □1

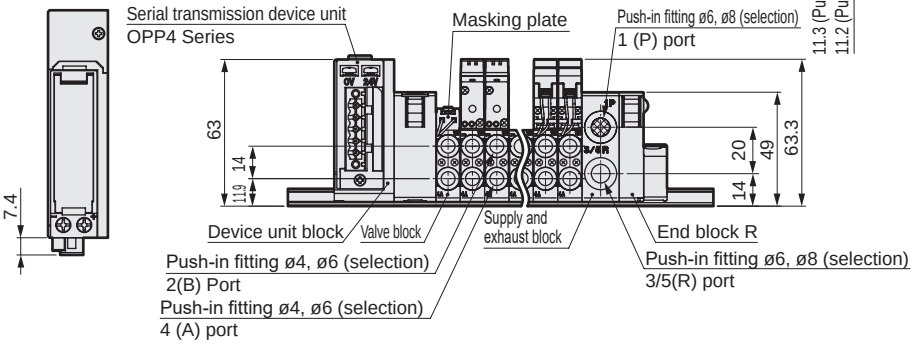

Note: Refer to page 660 for dimensions of the push-in L fitting.

MN4GE2

● Thin serial transmission (T7 □)

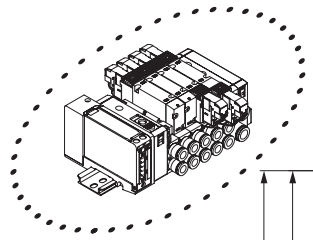

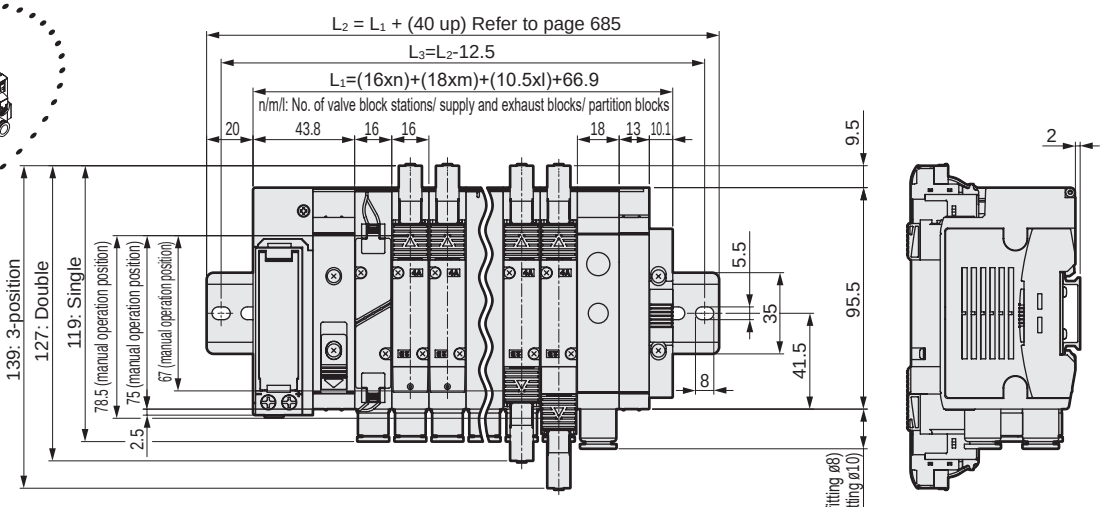

For T7S □1

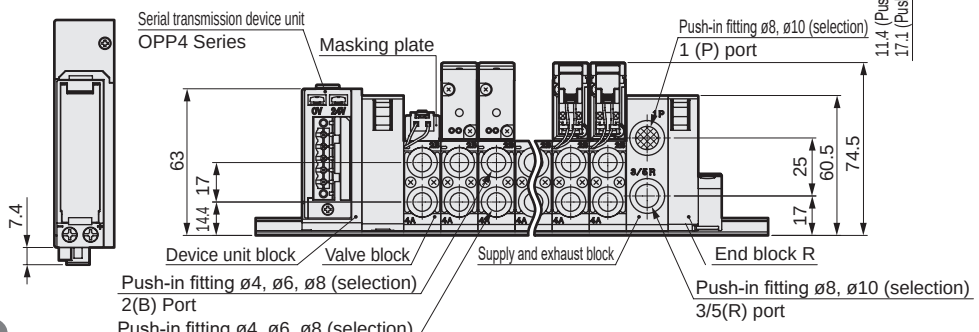

Dimensions

MN4GE1

● Thin serial transmission (T8 □)

Note: The two 3-port valve built-in type has the same dimensions as the double model.

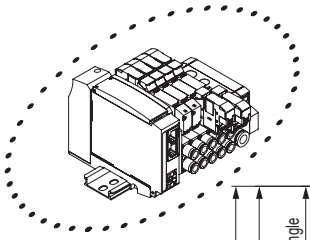

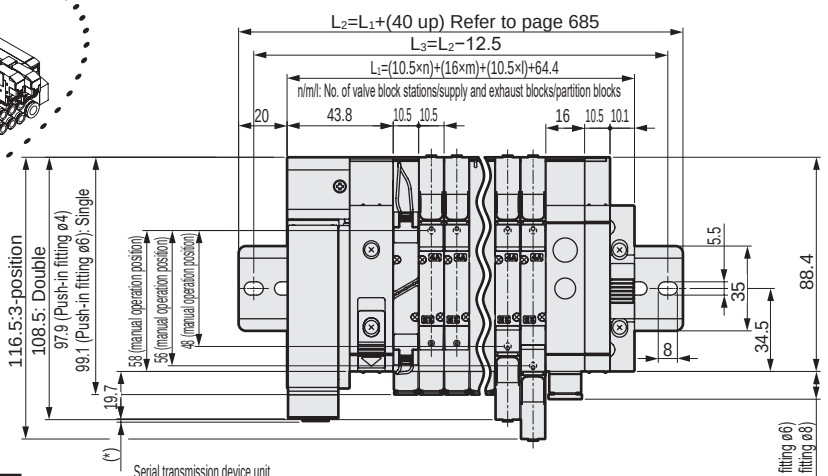

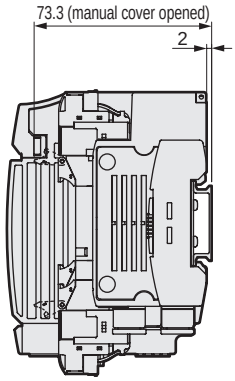

Serial transmission	* Dimensions
T8G □	1.0
T8P □	4.9
T8E □	1.5
T8D □	1.0

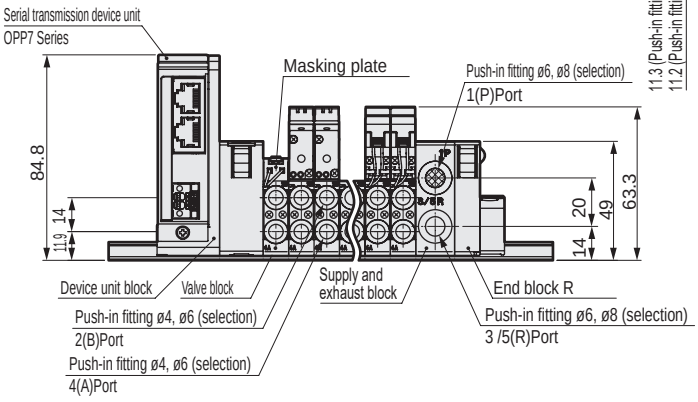

MN4GE2

● Thin serial transmission (T8*)

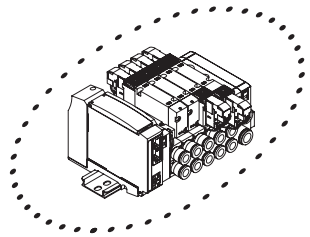

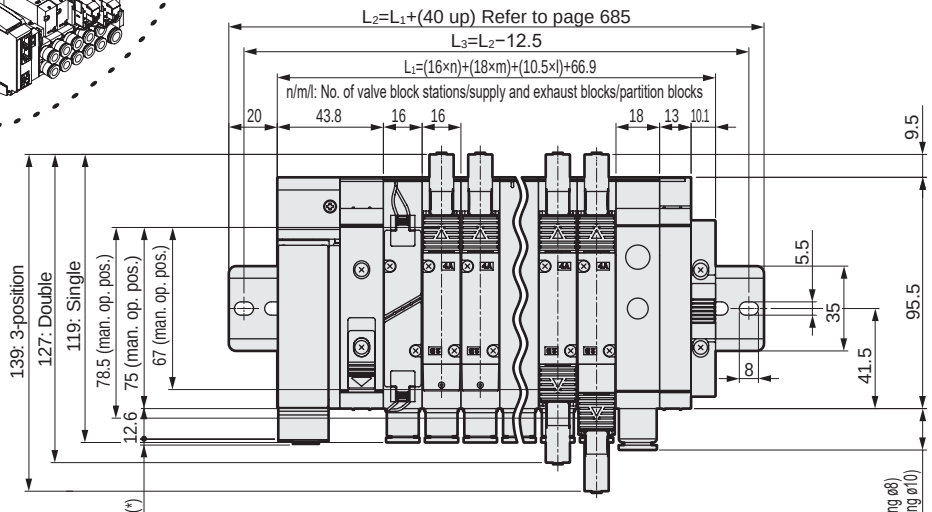

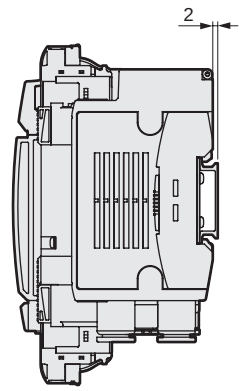

Serial transmission	* Dimensions
T8G □	1.0
T8P □	4.9
T8E □	1.5
T8D □	1.0

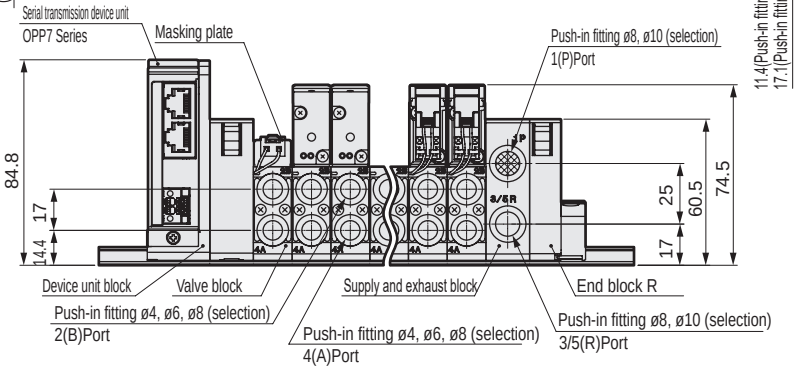

Dimensions

MN4GE1 Valve block

● Push-in L fitting (upward)

ø4(CL4)

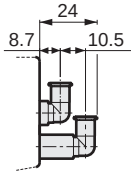

ø6(CL6)

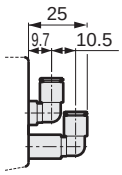

● Push-in L fitting (upward), single plug

ø4(CL4NC)

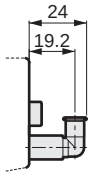

ø6(CL6NC)

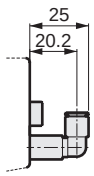

● Push-in L fitting (downward), single plug

ø4(CD4NC)

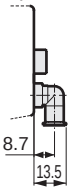

ø6(CD6NC)

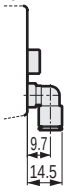

● Push-in L fitting (downward)

ø4(CD4)

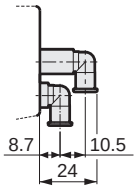

ø6(CD6)

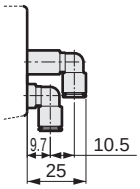

MN4G1 Supply and exhaust block

● Push-in L fitting (upward)

ø6(6L)

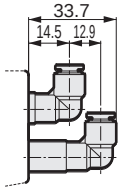

ø8(8L)

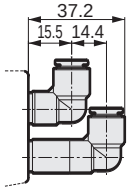

● Push-in L fitting (downward)

ø6(6D)

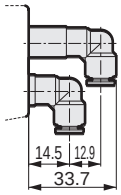

ø8(8D)

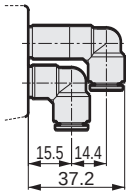

MN4GE2 Valve block

● Push-in L fitting (upward)

ø6(CL6)

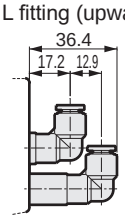

ø8(CL8)

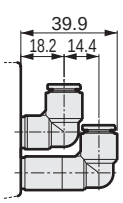

● Push-in L fitting (downward)

ø6(CD6)

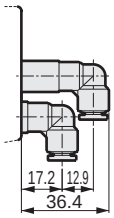

ø8(CD8)

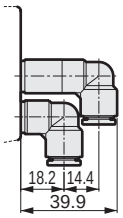

● Push-in L fitting (upward), single plug

ø6(CL6NC)



ø8(CL8NC)

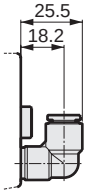

ø6(CL6NO)

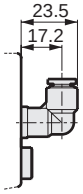

ø8(CL8NO)

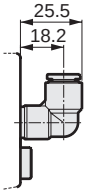

●● Push-in L fitting (downward), single plug

ø6(CD6NC)

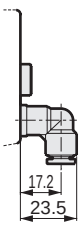

ø8(CD8NC)

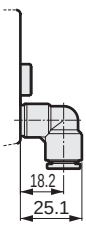

ø6(CD6NO)

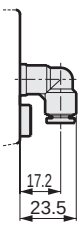

ø8(CD8NO)

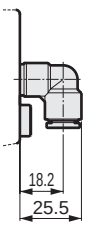

MN4G2 Supply and exhaust block

● Push-in L fitting (upward)

ø8(8L)

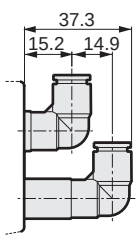

ø10(10L)

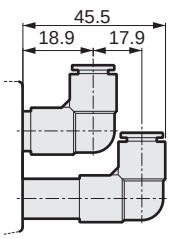

● Push-in L fitting (downward)

ø8(8D)

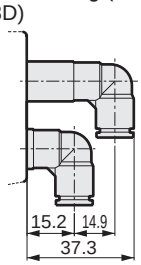

ø10(10D)

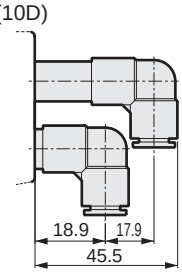

MEMO

Internal structure and parts list

N3GD110R/N3GD210R

● 2-position single: Normally closed
Grommet lead wire (blank)

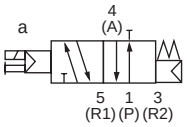

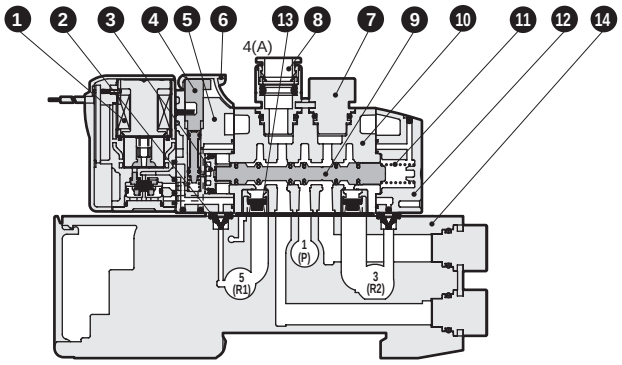

N3GD1110R/N3GD2110R

● 2-position single: Normally open
Grommet lead wire (blank)

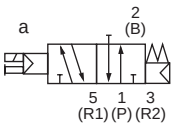

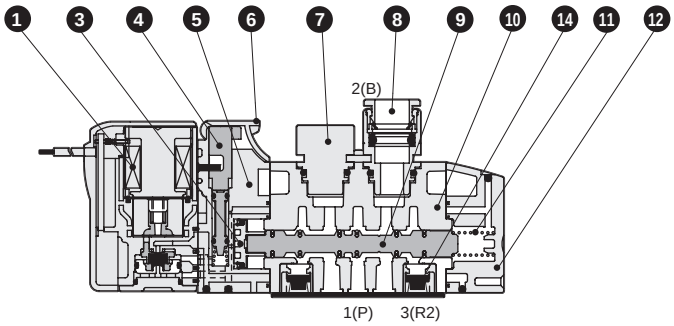

N3GD1660R/N3GD2660R

● Two 3-port valve built-in A side valve: Normally closed, B side valve: Normally closed
Grommet lead wire (blank)

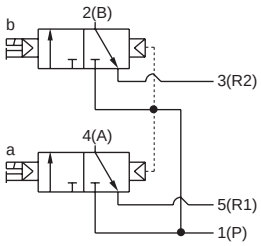

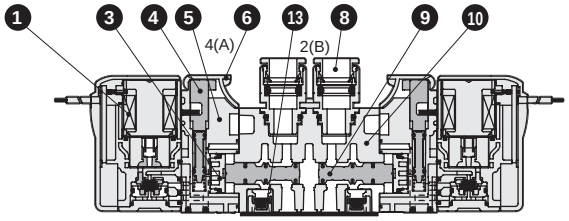

Main parts list

No.	Part name	Material
1	Coil assembly	-
2	Pilot exhaust check valve	Hydrogenated nitrile rubber
3	Piston D assembly	-
4	Manual override	Resin
5	Piston chamber	Resin
6	Manual protection cover	Resin
7	Plug cartridge	Aluminum
8	Cartridge push-in fitting	-
9	Spool assembly	-
10	Body	Aluminum alloy die-casting
11	Spool spring	-
12	Cap	Resin
13	Check valve	-
14	Valve block	Resin

Parts list

No.	Part name			Model No.
1	Coil assembly			4GR-[electrical connection]-□-COIL-[Voltage] Blank: Standard A: Ozone specifications
8	Cartridge push-in fitting and related parts	3G1 4G1	ø4 straight	4G1R-JOINT-C4
			ø6 straight	4G1R-JOINT-C6
			Plug cartridge	4G1R-JOINT-CPG
		3G2 4G2	ø4 straight	4G2R-JOINT-C4
			ø6 straight	4G2R-JOINT-C6
			ø8 straight	4G2R-JOINT-C8
			Plug cartridge	4G2R-JOINT-CPG
-	E-connector socket assembly			4GR - SOCKET - ASSY - [electrical connections] -[Voltage]
-	EJ type connector socket assembly			4GR - SOCKET - ASSY - [electrical connections]
-	DIN terminal box assembly (3GD2 only)			4GR-TERMINAL-BOX-[Voltage]

Internal structure and parts list

N4GD110R/N4GD210R

● 2-position single
Grommet lead wire (blank)

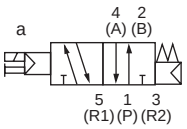

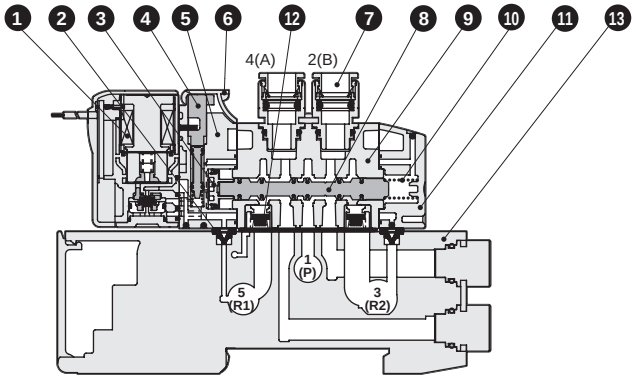

N4GD120R/N4GD220R

● 2-position double
Grommet lead wire (blank)

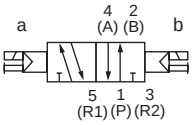

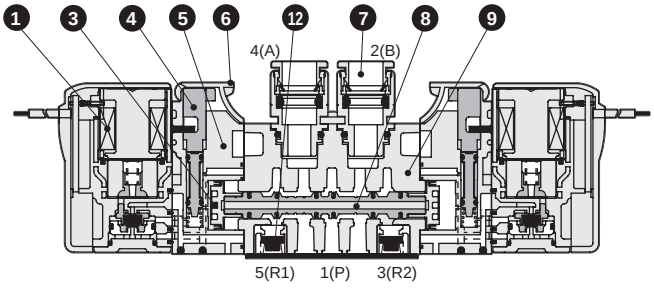

N4GD1$^{3}_{4}_{5}$0R/N4GD2$^{3}_{4}_{5}$0R

● 3-position
Grommet lead wire (blank)

All ports closed

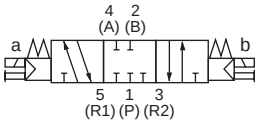

A/B/R connection

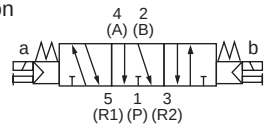

P/A/B connection

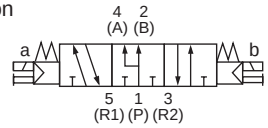

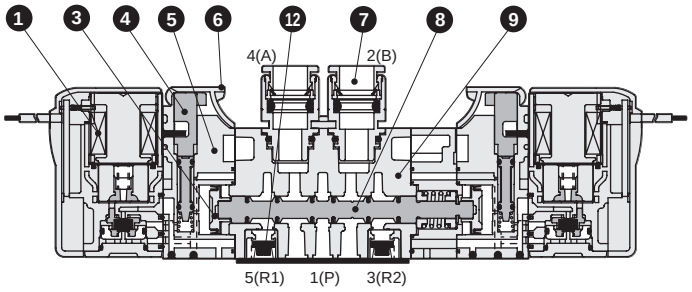

Main parts list

No.	Part name	Material
1	Coil assembly	-
2	Pilot exhaust check valve	Hydrogenated nitrile rubber
3	Piston D assembly	-
4	Manual override	Resin
5	Piston chamber	Resin
6	Manual protection cover	Resin
7	Cartridge push-in fitting	-
8	Spool assembly	-
9	Body	Aluminum alloy die-casting
10	Spool spring	-
11	Cap	Resin
12	Check valve	-
13	Valve block	Resin

Parts list

No.	Part name			Model No.
1	Coil assembly			4GR-[electrical connection]-□-COIL-[Voltage] Blank: Standard A: Ozone specifications
7	Cartridge push-in fitting and related parts	3G1 4G1	ø4 straight	4G1R-JOINT-C4
			ø6 straight	4G1R-JOINT-C6
			Plug cartridge	4G1R-JOINT-CPG
		3G2 4G2	ø4 straight	4G2R-JOINT-C4
			ø6 straight	4G2R-JOINT-C6
			ø8 straight	4G2R-JOINT-C8
			Plug cartridge	4G2R-JOINT-CPG
-	E-connector socket assembly			4GR - SOCKET - ASSY - [electrical connections] -[Voltage]
-	EJ type connector socket assembly			4GR - SOCKET - ASSY -[electrical connections]
-	DIN terminal box assembly (4GD2 only)			4GR-TERMINAL-BOX-[Voltage]

Internal structure and parts list

N3GE1660R/N3GE2660R

● Two 3-port valve integrated A side valve: Normally closed, B side valve: Normally closed
Grommet lead wire (blank) Refer to page 665.

N4GE110R/N4GE210R

● 2-position single
Grommet lead wire (blank)

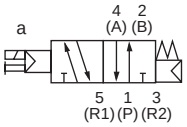

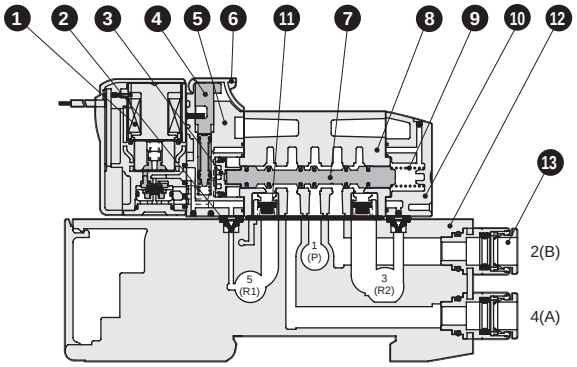

N4GE120R/N4GE220R

● 2-position double
Grommet lead wire (blank)

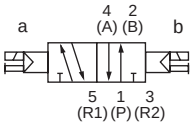

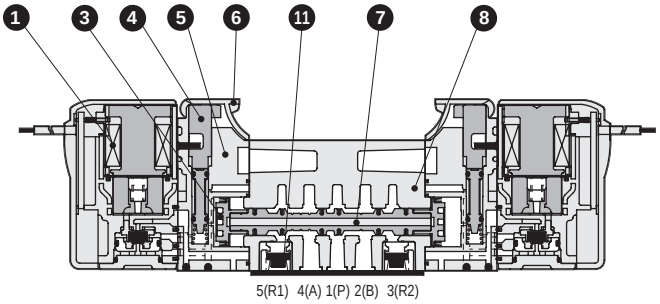

N4GE1 $^{3}_{4}_{5}$0R/N4GE2 $^{3}_{4}_{5}$0R

● 3-position
Grommet lead wire (blank)

All ports closed

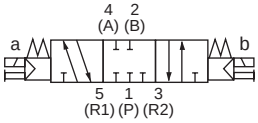

A/B/R connection

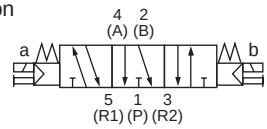

P/A/B connection

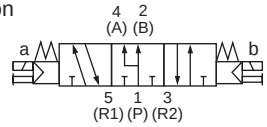

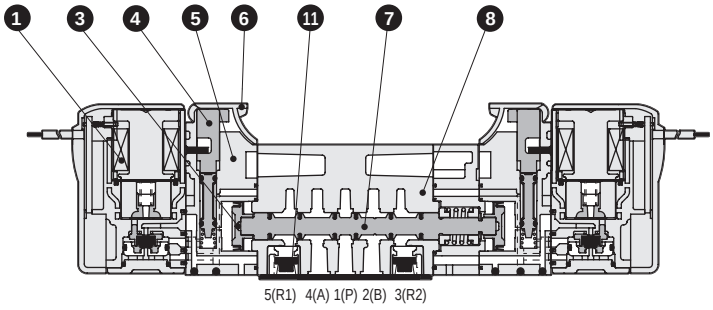

Main parts list

No.	Part name	Material
1	Coil assembly	-
2	Pilot exhaust check valve	Hydrogenated nitrile rubber
3	Piston D assembly	-
4	Manual override	Resin
5	Piston chamber	Resin
6	Manual protection cover	Resin
7	Spool assembly	-
8	Body	Aluminum alloy die-casting
9	Spool spring	-
10	Cap	Resin
11	Check valve	-
12	Valve block	Resin
13	Cartridge push-in fitting	-

Parts list

No.	Part name			Model No.
1	Coil assembly			4GR-[Electrical connections]-□-COIL-[Voltage] Blank: Standard A: Ozone specifications
13	Cartridge push-in fitting and related parts	3G1 4G1	ø4 Straight	4G1R−JOINT−C4
			ø6 Straight	4G1R−JOINT−C6
			Plug cartridge	4G1R−JOINT−CPG
		3G2 4G2	ø4 Straight	4G2R−JOINT−C4
			ø6 Straight	4G2R−JOINT−C6
			ø8 Straight	4G2R−JOINT−C8
			Plug cartridge	4G2R−JOINT−CPG
−	E-connector socket assembly			4GR - SOCKET - ASSY -[Electrical connections]-[Voltage]
−	EJ-connector socket assembly			4GR - SOCKET - ASSY -[Electrical connections]
−	DIN terminal box assembly (4GE2 only)			4GR-TERMINAL-BOX-[Voltage]

Internal structure and parts list

N3GE1660R/N3GE2660R

● Two 3-port valve integrated A side valve: Normally closed, B side valve: Normally closed
Grommet lead wire (blank)

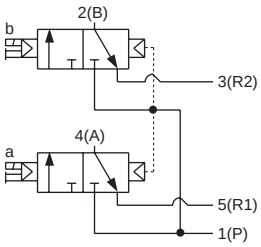

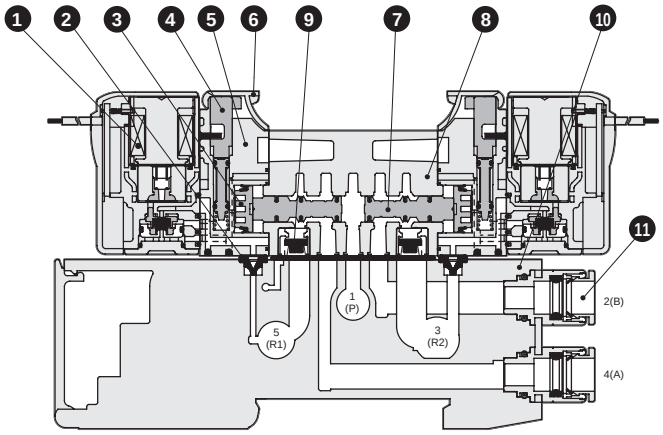

Main parts list

No.	Part name	Material
1	Coil assembly	-
2	Pilot exhaust check valve	Hydrogenated nitrile rubber
3	Piston assembly	-
4	Manual override	Resin
5	Piston chamber	Resin
6	Manual protection cover	Resin
7	Spool assembly	-
8	Body	Aluminum alloy die-casting
9	Check valve	-
10	Valve block	Resin
11	Cartridge push-in fitting	-

Parts list

No.	Part name			Model No.
1	Coil assembly			4GR-[Electrical connections]-□-COIL-[Voltage] Blank: Standard A: Ozone specifications
11	Cartridge push-in fitting and related parts	3G1 4G1	ø4 Straight	4G1R−JOINT−C4
			ø6 Straight	4G1R−JOINT−C6
			Plug cartridge	4G1R−JOINT−CPG
		3G2 4G2	ø4 Straight	4G2R−JOINT−C4
			ø6 Straight	4G2R−JOINT−C6
			ø8 Straight	4G2R−JOINT−C8
			Plug cartridge	4G2R−JOINT−CPG
−	E-connector socket assembly			4GR-SOCKET-ASSY-[Electrical connections]-[Voltage]
−	EJ-connector socket assembly			4GR-SOCKET-ASSY-[Electrical connections]
−	DIN terminal box assembly (3GE2 only)			4GR-TERMINAL-BOX-[Voltage]

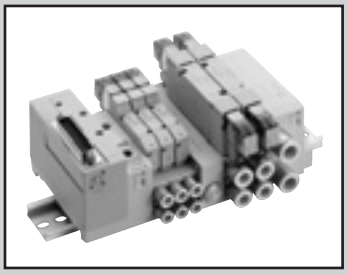

4G1/2 Mix manifold

MN3GDX12,MN4GDX12 MN4GEX12 Series

● Cylinder bore size: ø20 to ø80

RoHS CAD

Specifications

Common with all series.

For individual wiring, refer to page 614 (body piping) or page 622 (base piping), and for reduced wiring, refer to page 630 (body piping) or page 646 (base piping).

How to order

MN3G$^{D}_{E}$X12R- ○ - ○ ○ ○ - ○ - ○

MN4G$^{D}_{E}$X12R- ○ - ○ ○ ○ - ○ - ○

Ⓐ Model No. Ⓑ Port size Ⓒ Electrical connections (Reduced wiring connection) Ⓓ Terminal/connector pin array Ⓔ Option Ⓕ Station No. Ⓖ Voltage

* The model No. will be "MN□G□X12R-". Other items are common with the example of model No. for each series.
For individual wiring, refer to page 616 (body piping) or page 624 (base piping), and for reduced wiring, refer to page 632 (body piping) or page 648 (base piping).

Manifold components explanation and parts list

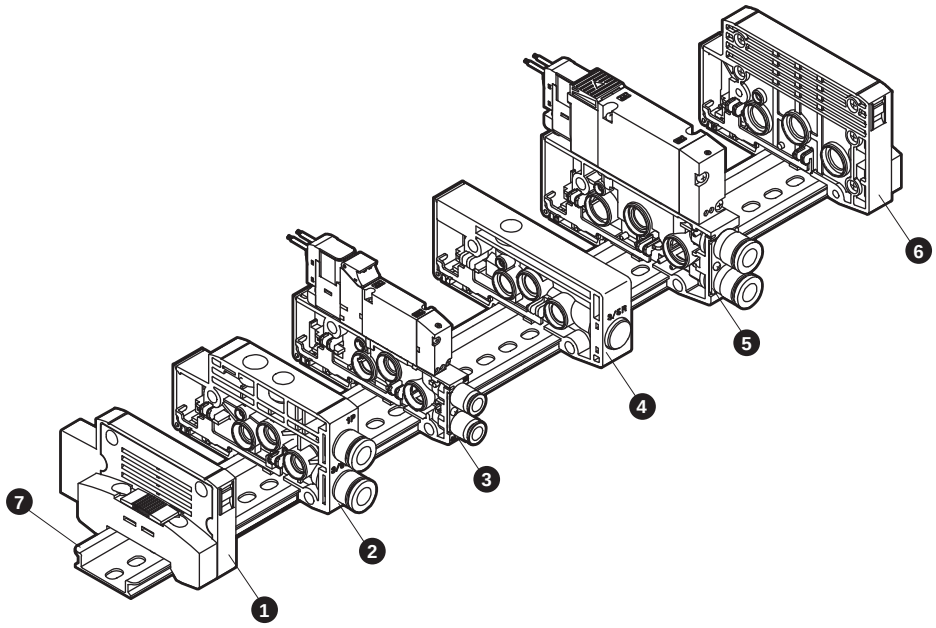

* Notes on 4G1/2 mix manifolds
With the fitting at the front, the left side of the mixed block is the 4G1 series and the right side the 4G2 series.
(Note that these position settings cannot be reversed.)

List of main components (refer to pages 668 to 682 for details)

No.	Component name	Model No. (example)
1	End block L	N4G1R-EL
2	Supply and exhaust block	N4G1R-Q-8
3	Discrete valve block with solenoid valve	N4GE110R-C6-H-3
4	Mixed block	N4G12R-MIX
5	Discrete valve block with solenoid valve	N4GE210R-C8-H-3
6	End block R	N4G2R-ER
7	DIN rail	N4GR-BAA (Length)

Weight

N4G12R-MIX: 49 g

Refer to the specifications of each series for other components.

Mixed block: Dimensions

Unit mm

MN4GEX12

Note 1: For details of the E-connector, EJ type connector, and DIN terminal box, refer to pages for each model (MN4GD: pages 619 and 621, MN4GE: pages 627 and 629).
Note 2: Refer to page 660 for dimensions of the push-in L fitting.

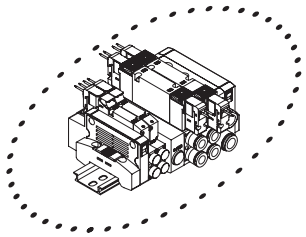

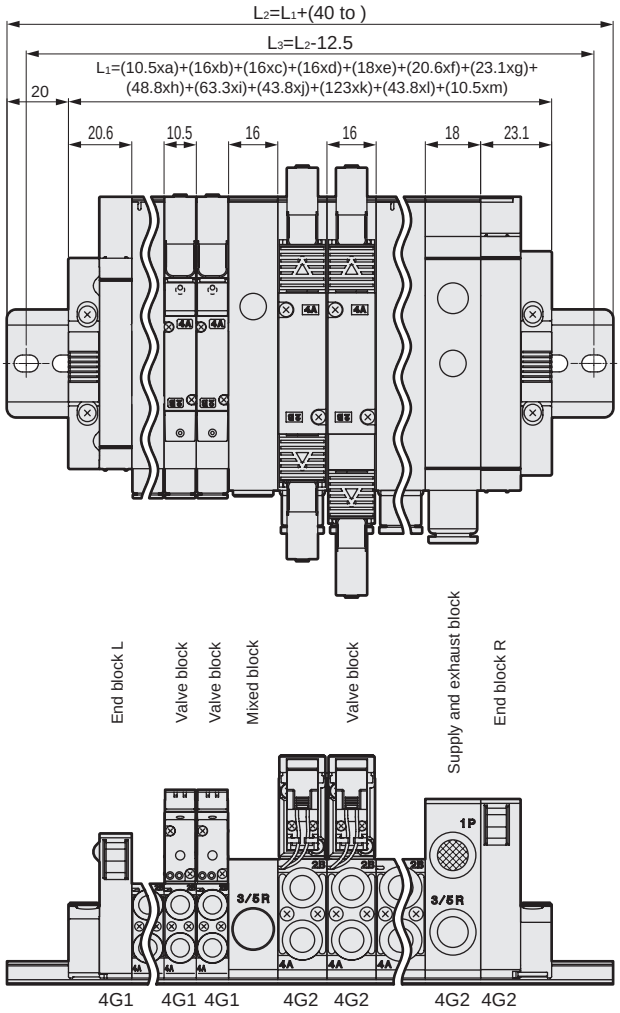

This diagram is one example of the many free combinations available for the mix manifold.
With the dimensions listed below, configure combinations with reference to the previous page.

Part name	Dimensions
a : 4G1 number of valve blocks	10.5xa
b : 4G2 number of valve blocks	16xb
c : number of mix blocks	16xc
d : 4G1 number of supply and exhaust blocks	16xd
e : 4G2 number of supply and exhaust blocks	18xe
f : 4G1 number of L end blocks	20.6xf
g : 4G2 number of R end blocks	23.1xg
h : 4G1/2 number of reduced wiring T30/T5*	48.8xh
i : 4G1/2 number of reduced wiring T10/T11*	63.3xi
j : 4G1/2 number of reduced wiring T7*	43.8xj
k : 4G1/2 number of reduced wiring T6G1	123xK
l : 4G1/2 number of reduced wiring T8*	43.8xl
m: 4G1/2 number of partition blocks	10.5xm

*1: The mixed block must be placed between 4G1 and 4G2.
*2: The max. station No. is 20.

Block manifold: Block configuration

As units can be freely assembled, it is easy to change the number of stations, perform maintenance, etc.

● Valve block with solenoid valve

(1) The types of solenoid valve required can be arranged on a DIN rail at the number of stations required.
However, the number of stations depends on the wiring method. (Refer to pages 630 and 646.)

(2) Solenoid valves are numbered 1, 2, 3... from the left with the fitting in front.

● Supply and exhaust block

(1) At the connecting part of each block, a number of blocks can be freely connected.

● End block

(1) Install on both sides for individual wiring specifications.

(2) Install only on wiring block opposite side for reduced wiring specifications.

● Partition block

(1) Install in combination with supply and exhaust blocks for multi-pressure specifications.

● Mixed block

(1) Install when combining 4G1 and 4G2 as a mix on the same DIN rail.
This will have the effect of reducing piping.
Note: 4G1 on the left side of the mixed block and 4G2 on the right side.

Block manifold configuration

Piping

Wiring

Related products

Piping block

A Discrete valve block with solenoid valve

- For body piping individual wiring
- For body piping reduced wiring
- For base piping individual wiring
- For base piping reduced wiring

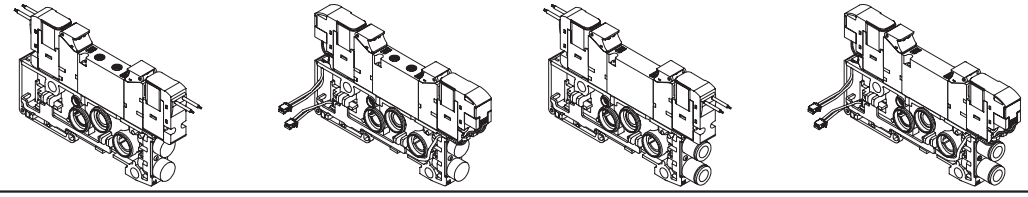

B Discrete valve block with masking plate

- For body piping
- For base piping

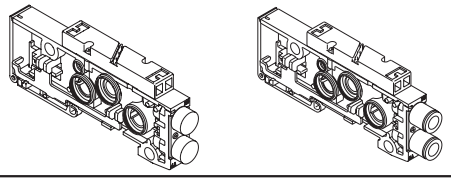

C Discrete valve block

- For body piping
- For base piping

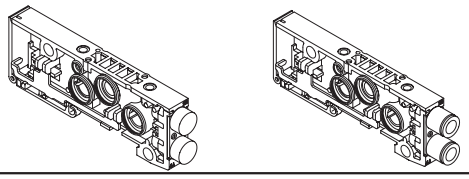

D Supply and exhaust block

- For internal pilot

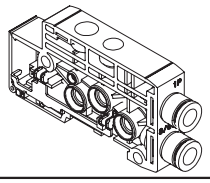

E End block

- For left
- For right

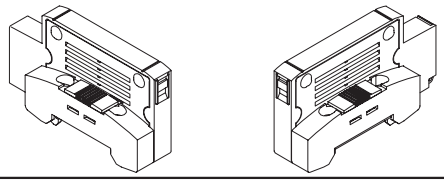

F Partition block

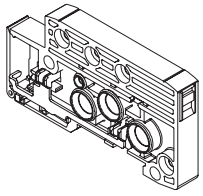

G Mixed block

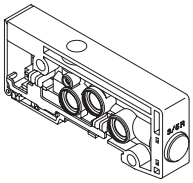

Wiring block

H Common terminal box

- M3
- Clamping method

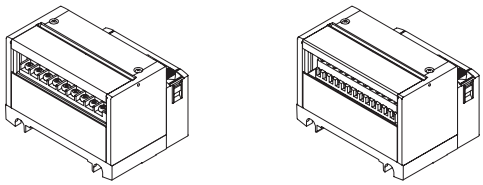

I D sub-connector block

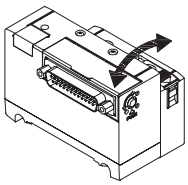

J Flat cable connector block

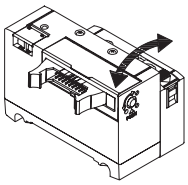

K Serial transmission block

- Connector connection
- Thin slot

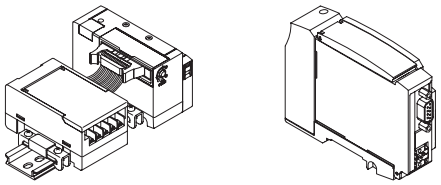

Related products

L Related products

- Mounting rail
- Silencer
- Tag plate
- Air supply spacer, exhaust spacer
- Blanking plug
- Pilot check valve

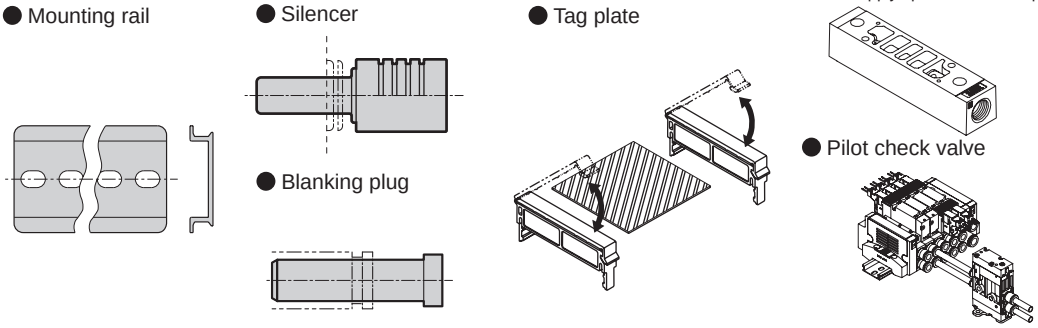

Piping

A. Discrete valve block with solenoid valve

Block assembled from solenoid valve body and valve block (split resin base). For model selection, refer to the following pages.
Body piping individual wiring: page 616, base piping individual wiring: page 624, body piping reduced wiring: page 632,
base piping reduced wiring: page 648

B. Discrete valve block with masking plate

Block assembled from masking plate and valve block (split resin base).

N4GA1 R - MP ——— 3

N4GB1 R - MPD - C4 - 3 F

Ⓐ Model No. Ⓑ Type Ⓒ Bore size Ⓔ Option
Ⓓ Cable length *4

Ⓐ Model No.	Ⓑ Type	
N4GA1	MP	For individual wiring
N4GA2	MPS	For reduced wiring single
N4GB1	MPD	For reduced wiring double/3-position
N4GB2		

Ⓓ Cable length *4		Ⓔ Option	
Blank	For individual wiring	Blank	No option
2 to 10	Select the length from page 671.	F	A/B-port filter built in

*4: A socket assembly is attached with purchases for reduced wiring station expansion.
Select a cable length from the following page and fill in the Ⓓ cable length field. If ordering with the manifold specifications sheet, the cable length can be omitted.

Ⓒ Bore size (for base piping, this must be configured)	
C4	ø4 push-in fitting
C6	ø6 push-in fitting
C8	ø8 push-in fitting *2
CL4	ø4 push-in L fitting (upward) *1 *3
CL6	ø6 push-in L fitting (upward) *3
CL8	ø8 push-in L fitting (upward) *2 *3
CD4	ø4 push-in L fitting (downward) *1
CD6	ø6 push-in L fitting (downward)
CD8	ø8 push-in L fitting (downward) *2

Single, plug specs	A port	B port
C4NC	ø4 push-in fitting	Plug
C6NC	ø6 push-in fitting	
C8NC	ø8 push-in fitting *2	
C4NO	Plug	ø4 push-in fitting
C6NO		ø6 push-in fitting
C8NO		ø8 push-in fitting *2
CL4NC	ø4 push-in L fitting (upward) *1 *3	Plug
CL6NC	ø6 push-in L fitting (upward) *3	
CL8NC	ø8 push-in L fitting (upward) *2 *3	
CL4NO	Plug	ø4 push-in L fitting (upward) *1 *3
CL6NO		ø6 push-in L fitting (upward) *3
CL8NO		ø8 push-in L fitting (upward) *2 *3
CD4NC	ø4 push-in L fitting (downward) *1	Plug
CD6NC	ø6 push-in L fitting (downward)	
CD8NC	ø8 push-in L fitting (downward) *2	
CD4NO	Plug	ø4 push-in L fitting (downward) *1
CD6NO		ø6 push-in L fitting (downward)
CD8NO		ø8 push-in L fitting (downward) *2

*1: Only compatible with 4GB1.
*2: Only compatible with 4GB2.
*3: The push-in L fitting (upward) is only compatible with single solenoids.

N4GA1R-MP

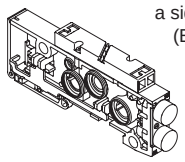

N4GB1R-MPD-C4-3

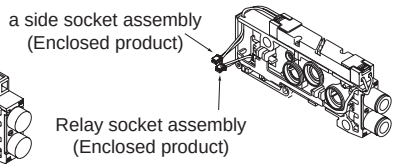

N4GA2R-MP

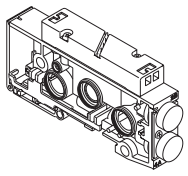

N4GB2R-MPD-C6-5

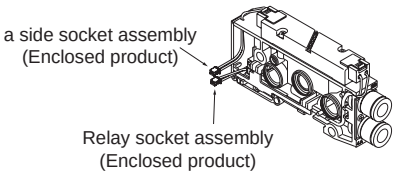

B-1. Masking plate

4G1 R - MP

Ⓐ Model No.

4G1R-MP

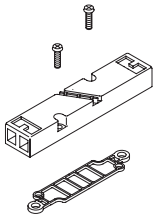

4G2R-MP

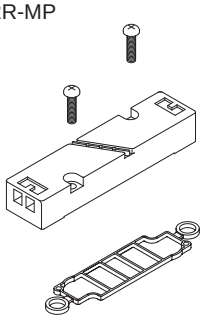

Piping

C. Discrete valve block (separate item only)

Discrete valve block (split resin base).

N4GA1 R - V1 ——— 3

N4GB1 R - V2 - C4 - 3 F

Ⓐ Model No. Ⓑ Type Ⓒ Bore size Ⓓ Cable length Ⓔ Option

Ⓐ Model No.	Ⓑ Type	
N4GA1	V1	For individual wiring
N4GA2		For reduced wiring single
N4GB1	V2	For reduced wiring double/3-position
N4GB2		

Ⓓ Cable length		Ⓔ Option	
Blank	Individual wiring	Blank	No option
2 to 10	Select a length from the following	F	A/B-port filter built in

Ⓒ Bore size (for base piping, this must be configured)			Single, plug specs	A port	B port
C4	ø4 push-in fitting		CL4NO	Plug	ø4 push-in fitting
C6	ø6 push-in fitting		CL6NO		ø6 push-in fitting
C8	ø8 push-in fitting *2		CL8NO		ø8 push-in fitting *2
CL4	ø4 push-in L fitting (upward) *1 *3		CL4NC	ø4 push-in L fitting (upward) *1 *3	Plug
CL6	ø6 push-in L fitting (upward) *3		CL6NC	ø6 push-in L fitting (upward) *3	
CL8	ø8 push-in L fitting (upward) *2 *3		CL8NC	ø8 push-in L fitting (upward) *2 *3	
CD4	ø4 push-in L fitting (downward) *1		CL4NO	Plug	ø4 push-in L fitting (upward) *1 *3
CD6	ø6 push-in L fitting (downward)		CL6NO		ø6 push-in L fitting (upward) *3
CD8	ø8 push-in L fitting (downward) *2		CL8NO		ø8 push-in L fitting (upward) *2 *3
Single, plug specs	A port	B port	CD4NC	ø4 push-in L fitting (downward) *1	Plug
C4NC	ø4 push-in fitting	Plug	CD6NC	ø6 push-in L fitting (downward)	
C6NC	ø6 push-in fitting		CD8NC	ø8 push-in L fitting (downward) *2	
C8NC	ø8 push-in fitting *2		CD4NO	Plug	ø4 push-in L fitting (downward) *1
C4NO	Plug	ø4 push-in fitting	CD6NO		ø6 push-in L fitting (downward)
C6NO		ø6 push-in fitting	CD8NO		ø8 push-in L fitting (downward) *2
C8NO		ø8 push-in fitting *2			

*1: Only compatible with 4GB1.
*2: Only compatible with 4GB2.
*3: The push-in L fitting (upward) is only compatible with single solenoids.

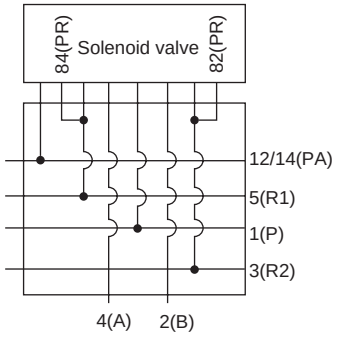

Discrete valve block circuit diagram

N4GA1R-V1

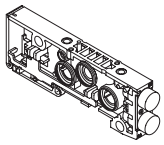

N4GB1R-V2-C4

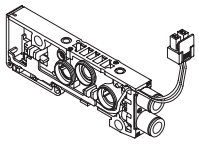

N4GA2R-V1

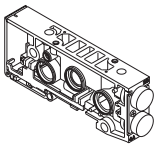

N4GB2R-V2-C6

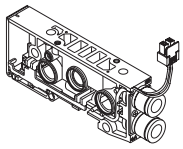

Valve block for expansion Cable length

Calculate the distance W between the expansion position and the wiring block (Fig. 1), and select an appropriate cable length from [Table 1]. Note that the required socket assembly will differ between the a side solenoid and the b side solenoid.

While Fig. 1 shows the wiring block with left side specifications, similarly calculate the distance W between the expansion position and the wiring block for the right side specifications.

Calculation of W

· For MN4G1

W=(10.5xn)+(16xm)+(10.5xl)

· For MN4G2

W=(16xn)+(18xm)+(10.5xl)

n: number of valve blocks m: number of supply and exhaust blocks l: number of partition blocks

· For MN4GX

Calculate W using the mix block width of 16.

[Table 1] W length - selection No. compatibility table

Selection No.	Type of wiring		
	T10/11(R)	T30/5*/6*(R)	T7*/T8*
2		0	25 or less
3	20 or less	Over 0 to 30	Over 25 to 55
4	Over 20 to 70	Over 30 to 80	Over 55 to 105
5	Over 70 to 120	Over 80 to 130	Over 105 to 155
6	Over 120 to 170	Over 130 to 180	Over 155 to 205
7	Over 170 to 260	Over 180 to 270	Over 205 to 295
8	Over 260 to 350	Over 270 to 360	Over 295 to 385
9	Over 350 to 450	Over 360 to 460	Over 385 to 485
10	Over 450 to 570	Over 460 to 580	Over 485 to 605

Fig. 1

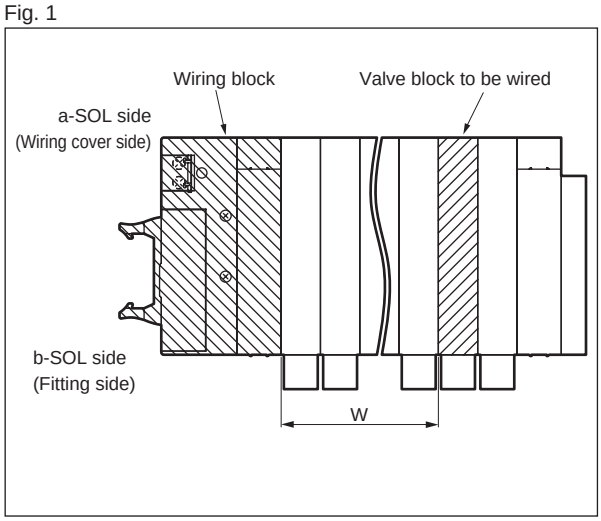

Piping

As problems may occur depending on the configuration, make selections with a sufficient understanding of the features of each block.

D. Supply and exhaust block

The supply and exhaust block can be installed at any position adjacent to the valve block.

As there is no set number of units, install two or more units when necessary for combinations with partition blocks or in order to increase the flow rate for supply and exhaust.

In order to prevent foreign matter from entering, the P-port is equipped with a filter.

N4G1R - Q - 8 X

Model No. A Type B Bore size C Exhaust

A Type		B Bore size		C Exhaust	
Q	Internal pilot	6	ø6 push-in fitting	Blank	Common exhaust
		6L	ø6 push-in fitting upward	X	Atmospheric release
		6D	ø6 push-in fitting down	(For X, configure atmosphere release for the end block.)	
		8	ø8 push-in fitting		
		8L	ø8 push-in fitting upward		
		8D	ø8 push-in fitting down		

N4G2R - Q - 10L X

Model No. A Type B Bore size C Exhaust

A Type		B Bore size		C Exhaust	
Q	Internal pilot	8	ø8 push-in fitting	Blank	Common exhaust
		8L	ø8 push-in fitting upward	X	Atmospheric release
		8D	ø8 push-in fitting down	(For X, configure atmosphere release for the end block.)	
		10	ø10 push-in fitting		
		10L	ø10 push-in fitting upward		
		10D	ø10 push-in fitting down		

N4G1R-Q-8

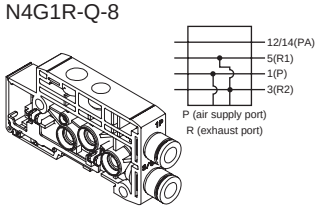

N4G1R-Q-8X

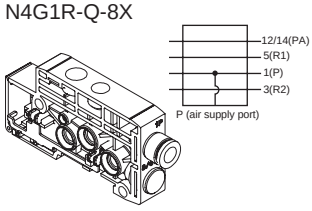

N4G2R-Q-10L

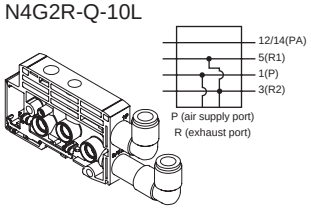

N4G2R-Q-10X

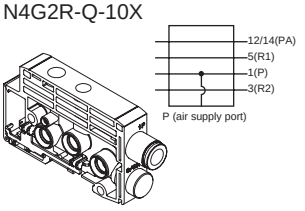

E. End block

Install on both ends of the manifold for individual wiring. Install on opposite sides of the wiring block for reduced wiring.

An exhaust muffler is built into the atmosphere release.

N4G1R - E R

Model No. A Type B Installation position

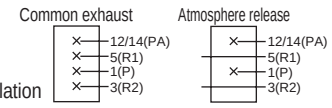

A Type		B Installation position	
E	Common exhaust	L	For left side
EX	Atmospheric release	R	For right side

N4G2R - EX L

Model No. A Type B Installation position

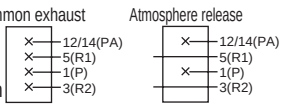

A Type		B Installation position	
E	Common exhaust	L	For left side
EX	Atmospheric release	R	For right side

N4G1R-EL

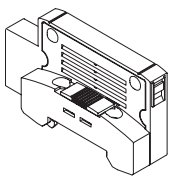

N4G1R-ER

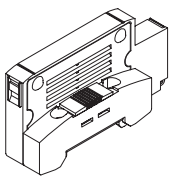

N4G2R-EL

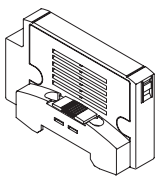

N4G2R-ER

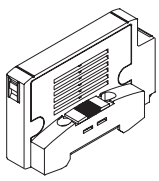

Piping

F. Partition block

Multi-pressure mixing and measures for back pressure increase prevention can be achieved by combining partition blocks and supply and exhaust blocks.

N4G1R - S

Model No. Ⓐ Type

Ⓐ Type	
SA	P/R/PA blocked
S	P/R blocked PA through
SP	P blocked R/PA through
SE	R blocked P/PA through

N4G1-S

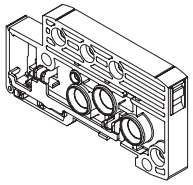

N4G2R - SA

Model No. Ⓐ Type

Ⓐ Type	
SA	P/R/PA blocked
S	P/R blocked PA through
SP	P blocked R/PA through
SE	R blocked P/PA through

N4G2-S

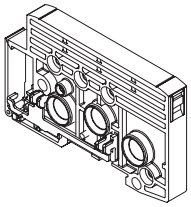

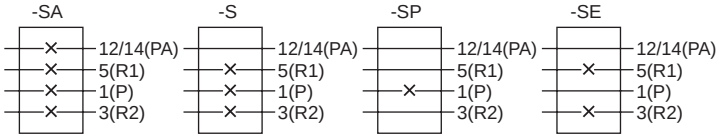

G. Mixed block

Install when 4G1 and 4G2 will be mixed within the same manifold.
Installation positions are 4G1 on the left side of the mixed block and 4G2 on the right side.

N4G12R - MIX

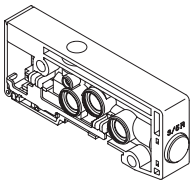

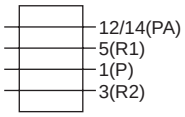

Wiring

Wiring block cannot be ordered as a single item.

* "Wiring block" is the overall term for H. common terminal blocks, I. D-sub-connector blocks, J. flat cable connector blocks, and K. serial transmission blocks.

H. Common terminal box

M3 thread specifications

N4G1R-T10

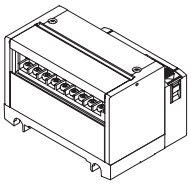

N4G1R-T10R

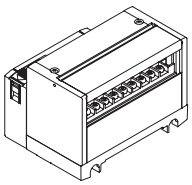

M3 thread specifications

N4G2R-T10

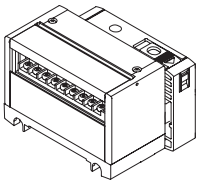

N4G2R-T10R

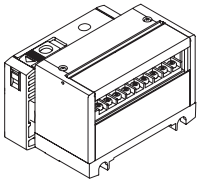

Clamping specifications

N4G1R-T11

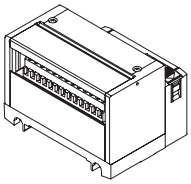

N4G1R-T11R

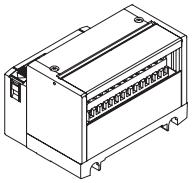

Clamping specifications

N4G2R-T11

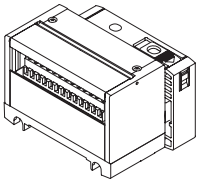

N4G2R-T11R

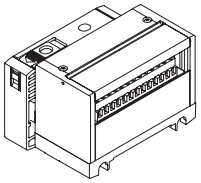

I. D sub-connector block

N4G1R-T30

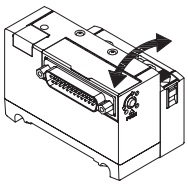

N4G1R-T30R

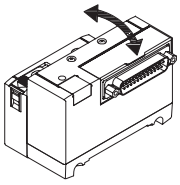

N4G2R-T30

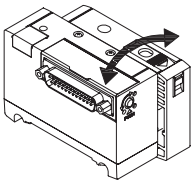

N4G2R-T30R

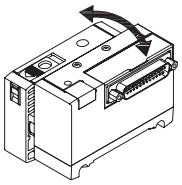

* Refer to page 819 for the model No. of cables with D sub-connector.

J. Flat cable connector block

● With power supply terminal

N4G1R-T50

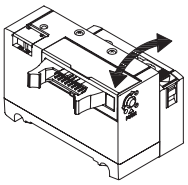

N4G1R-T50R

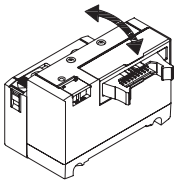

● With power supply terminal

N4G2R-T50

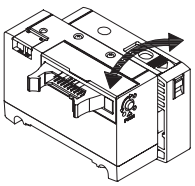

N4G2R-T50R

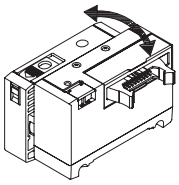

● Without power supply terminal

N4G1R-T51(N4G1R-T52) (N4G1R-T53)

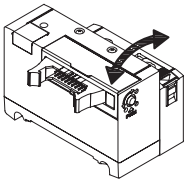

N4G1R-T51R(N4G1R-T52R) (N4G1R-T53R)

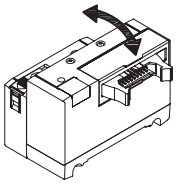

● Without power supply terminal

N4G2R-T51(N4G2R-T52) (N4G2R-T53)

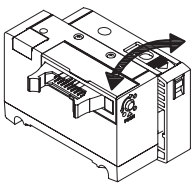

N4G2R-T51R(N4G2R-T52R) (N4G2R-T53R)

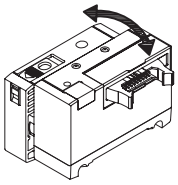

* The appearance of the connector unit varies with T52 and T53.

Wiring (Wiring block) * Wiring block cannot be ordered as a separate item.

K. Serial transmission block

● Connector type

N4G1R - T6G1

Model No. Ⓐ Type

Ⓐ Type			
T6G1	CC-Link	NPN	16 points

N4G1R-T6*

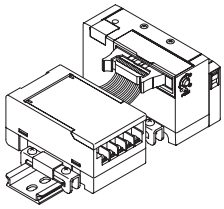

N4G2R - T6G1

Model No. Ⓐ Type

Ⓐ Type			
T6G1	CC-Link	NPN	16 points

N4G2R-T6*

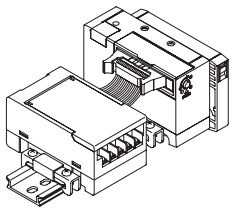

● Slim slot

N4G1R - T7D1

Model No. Ⓐ Type

Ⓐ Type			
T7D1	DeviceNet	NPN	16 points
T7G1	CC-Link		16 points
T7L1	SAVE NET		16 points
T7S1	CompoNet	NPN	16 points
T7SP1		PNP	

N4G1R-T7*

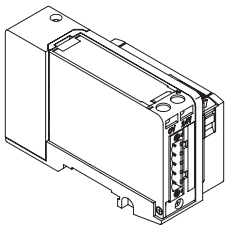

N4G2R - T7G1

Model No. Ⓐ Type

Ⓐ Type			
T7D1	DeviceNet	NPN	16 points
T7G1	CC-Link		16 points
T7L1	SAVE NET		16 points
T7S1	CompoNet	NPN	16 points
T7SP1		PNP	

N4G2R-T7*

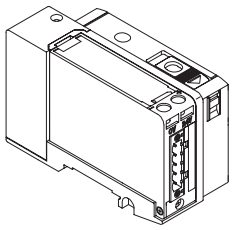

● Single unit serial transmission device (adapter) station (slim slot)

N4G1R - T8G1

Ⓐ Wiring method

Ⓐ Wiring method			
T8G1	CC-Link	NPN	16 points
T8G2			32 points
T8GP1		PNP	16 points
T8GP2			32 points
T8P1	PROFIBUS-DP	NPN	16 points
T8P2			32 points
T8PP1		PNP	16 points
T8PP2			32 points
T8EC1	EtherCAT	NPN	16 points
T8EC2			32 points
T8ECP1		PNP	16 points
T8ECP2			32 points
T8EN1	EtherNet/IP	NPN	16 points
T8EN2			32 points
T8ENP1		PNP	16 points
T8ENP2			32 points
T8D1	DeviceNet	NPN	16 points
T8D2			32 points
T8DP1		PNP	16 points
T8DP2			32 points
T8EB1	CC-Link IEF Basic	NPN	16 points
T8EB2			32 points
T8EBP1		PNP	16 points
T8EBP2			32 points
T8EP1	PROFINET	NPN	16 points
T8EP2			32 points
T8EPP1		PNP	16 points
T8EPP2			32 points

N4G1R-T8*

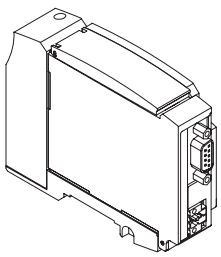

N4G2R - T8G1

Ⓐ Wiring method

Ⓐ Wiring method			
T8G1	CC-Link	NPN	16 points
T8G2			32 points
T8GP1		PNP	16 points
T8GP2			32 points
T8P1	PROFIBUS-DP	NPN	16 points
T8P2			32 points
T8PP1		PNP	16 points
T8PP2			32 points
T8EC1	EtherCAT	NPN	16 points
T8EC2			32 points
T8ECP1		PNP	16 points
T8ECP2			32 points
T8EN1	EtherNet/IP	NPN	16 points
T8EN2			32 points
T8ENP1		PNP	16 points
T8ENP2			32 points
T8D1	DeviceNet	NPN	16 points
T8D2			32 points
T8DP1		PNP	16 points
T8DP2			32 points
T8EB1	CC-Link IEF Basic	NPN	16 points
T8EB2			32 points
T8EBP1		PNP	16 points
T8EBP2			32 points
T8EP1	PROFINET	NPN	16 points
T8EP2			32 points
T8EPP1		PNP	16 points
T8EPP2			32 points

N4G2R-T8*

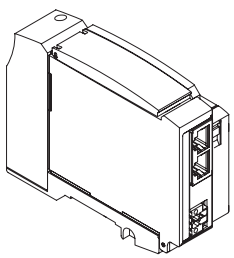

Wiring (Wiring block)

K. Serial transmission block

* The serial transmission device unit may be ordered as a separate item.

● Single unit serial transmission device (adapter) station (connector connection)

4GR - OPP3 - 1G

Ⓐ Wiring method

Code	Description			
Ⓐ Wiring method				
1G	T6G1	CC-Link	NPN	16 points

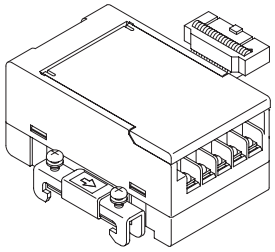

● Single unit serial transmission device (adapter) station (slim slot)

4GR - OPP4 - 1D

Ⓐ Wiring method

Code	Description			
Ⓐ Wiring method				
1D	T7D1	DeviceNet	NPN	16 points
1G	T7G1	CC-Link	NPN	16 points
1L	T7L1	SAVE NET	NPN	16 points
1S	T7S1	CompoNet	NPN	16 points
1S-P	T7SP1		PNP	16 points

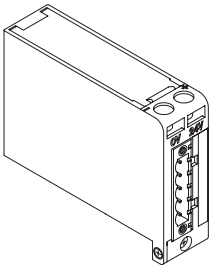

● Single unit serial transmission device (adapter) station (slim slot)

4GR - OPP7 - 2G

Ⓐ Wiring method

Code	Description			
Ⓐ Wiring method				
1G	T8G1	CC-Link	NPN	16 points
2G	T8G2			32 points
1G-P	T8GP1		PNP	16 points
2G-P	T8GP2			32 points
1P	T8P1	PROFIBUS-DP	NPN	16 points
2P	T8P2			32 points
1P-P	T8PP1		PNP	16 points
2P-P	T8PP2			32 points
1EC	T8EC1	EtherCAT	NPN	16 points
2EC	T8EC2			32 points
1EC-P	T8ECP1		PNP	16 points
2EC-P	T8ECP2			32 points
1EN	T8EN1	EtherNet/IP	NPN	16 points
2EN	T8EN2			32 points
1EN-P	T8ENP1		PNP	16 points
2EN-P	T8ENP2			32 points
1D	T8D1	DeviceNet	NPN	16 points
2D	T8D2			32 points
1D-P	T8DP1		PNP	16 points
2D-P	T8DP2			32 points
1EB	T8EB1	CC-Link IEF Basic	NPN	16 points
2EB	T8EB2			32 points
1EB-P	T8EBP1		PNP	16 points
2EB-P	T8EBP2			32 points
1EP	T8EP1	PROFINET	NPN	16 points
2EP	T8EP2			32 points
1EP-P	T8EPP1		PNP	16 points
2EP-P	T8EPP2			32 points

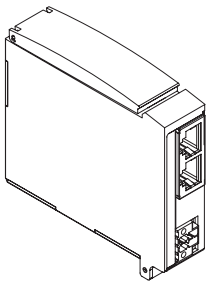

Related products Mounting rail, silencer, blanking plug, tag plate

● Mounting rail

N4GR-BAA [length]

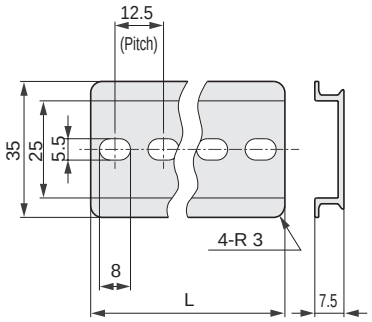

- Minimum length is 87.5 mm.
- Select the length at 12.5 mm pitch.
- Refer to page 685 for details.

● Silencer

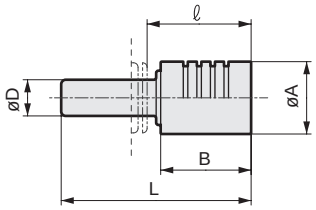

Model No.	D	L	A	B	ℓ
SLW-H6	ø6	41	16	20	23.5
SLW-H8	ø8	42	16	20	23
SLW-H10	ø10	53	20	27	31.5

● Blanking plug

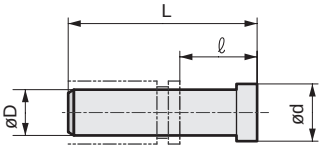

Model No.	D	L	ℓ	d
GWP4-B	ø4	27	11	6
GWP6-B	ø6	29	11.5	8
GWP8-B	ø8	33	14	10
GWP10-B	ø10	40	18.5	12

● Tag plates are shipped attached to the manifold body.

When required, mark a circle in the field for tag plates in the manifold specifications on pages 687 to 690.

[Tag holder]

N4G1 R-TAG-HOLDER

Ⓐ Model No.
N4G1
N4G2

(available in sets of 2.)

[Tag plate]

N4G1 R-TAG-PLATE-Ⓐ-200 *1

Ⓐ Model No.	Ⓑ Type		Ⓒ Length (mm) *1
N4G1	A	For MN4GD1/2 common	200
	B1	For MN4GE1, wide	300
	B2	For MN4GE1, narrow *2	400
N4G2	B	For MN4GE2	

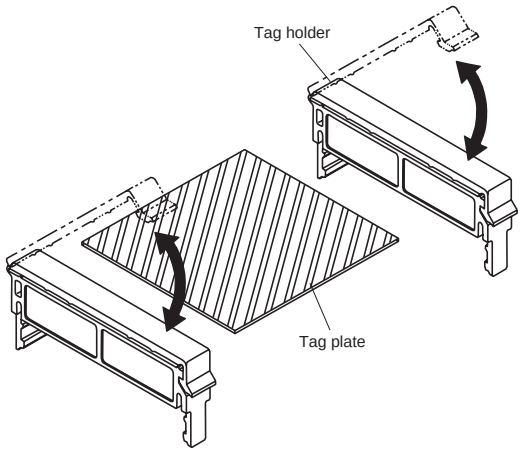

*1: [Length] 200, 300 and 400 mm are available. Select according to the product length and cut the resin as required.
*2: With the narrow type, manual operation is possible even with the tag plate on.
*3: Tag plates will not be attached when spacers are used in the manifold specifications.
*4: When DIN terminal box MN3GD2/MN4GD2 is selected, tag plates will not be attached.

Dimensions: Tag plate

MN4GD1/2

● Tag plate

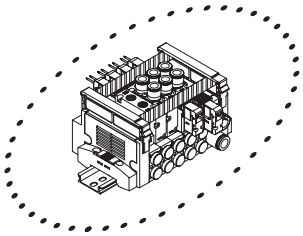

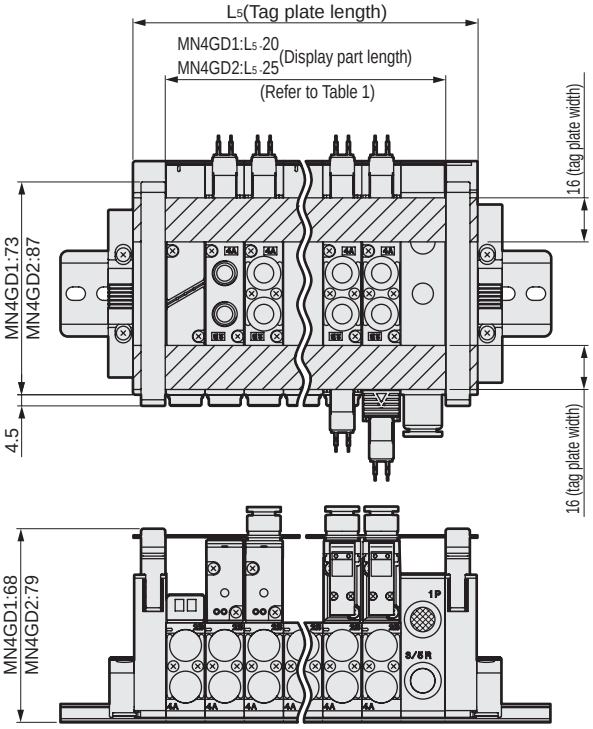

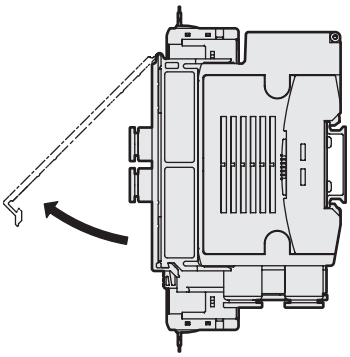

MN4GE1/2

● Tag plate

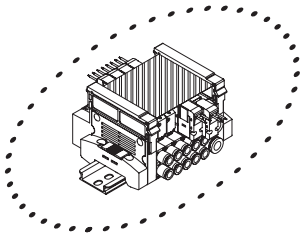

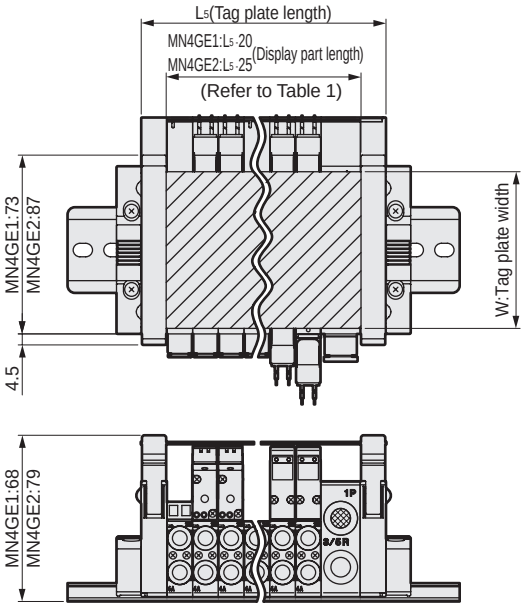

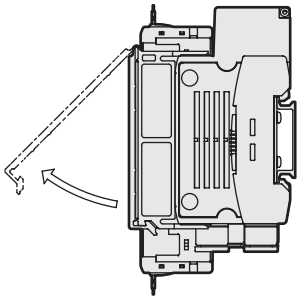

Model No.	W
N4G1R-TAG-PLATE-B1- Length	64
N4G1R-TAG-PLATE-B2- Length	30
N4G2R-TAG-PLATE-B- Length	45

Table 1: L_5 Formula for (tag plate length)

MN4GD		
MN4GD1	Individual wiring	$L_5=(10.5\times n)+(16\times m)+(10.5\times l)+20$
MN4GE1	Reduced wiring	$L_5=(10.5\times n)+(16\times m)+(10.5\times l)+25$
MN4GD2	Individual wiring	$L_5=(16\times n)+(18\times m)+(10.5\times l)+20$
MN4GE2	Reduced wiring	$L_5=(16\times n)+(18\times m)+(10.5\times l)+25$

n : No. of valve blocks
m: No. of supply and exhaust blocks
l : No. of partition blocks

Related products Air supply spacer

● Air supply spacer

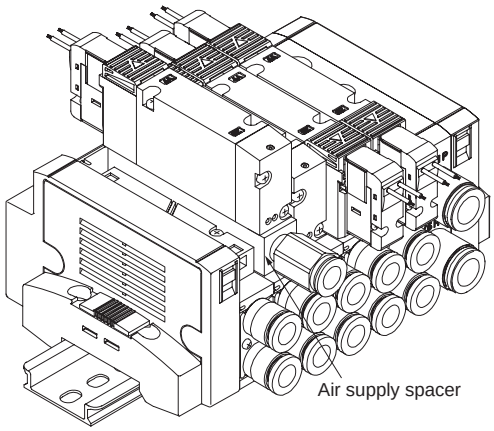

Specifications

Model No.	P→A/B		A/B→R		Weight g
	C[dm³/(s·bar)]	b	C[dm³/(s·bar)]	b	
4G1	0.70	0.23	0.93	0.16	8
4G2	1.6	0.17	1.8	0.16	35

*1: Values are when a valve is mounted.
*2: Effective cross-sectional area S and sonic conductance C are converted as S ≈ 5.0 x C.

How to order discrete units

4G 2 R − P − GWS6

Ⓐ Air supply spacer model No.
Ⓑ Port size

Code	Description	Model No. 4GD1	4GE1	4GD2	4GE2
Ⓐ Air supply spacer model No.					
1	For 4G1	●			
2	For 4G2			●	
Ⓑ Port size					
Blank	M5 (4G1), Rc1/8 (4G2)	●		●	
GWS4	ø4 fitting	●			
GWS6	ø6 fitting	●		●	
GWS8	ø8 fitting			●	

is not available.

Attachments: 4G1 set screws (2), dedicated gasket (1)
4G2 set screws (2), PR check valves (2), body gasket (1)

⚠ Precautions for model selection

*1 Specify the positions and quantity of air supply spacers for manifold in the manifold specifications sheet.
*2 If the A/B port fitting is elbow, turn the air supply port of the air supply spacer toward the reverse side (“a” solenoid side).
*3 If the elbow (upward) A/B port fitting is used for the reduced wiring manifold, the air supply spacer cannot be selected.
*4 Combination with the masking plate is not supported.

Dimensions

● 4G1

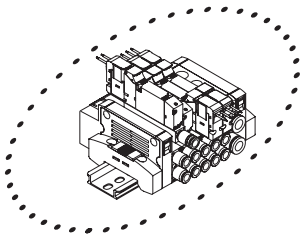

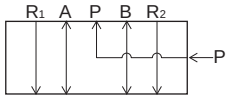

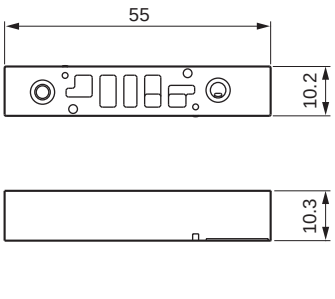

● 4G2

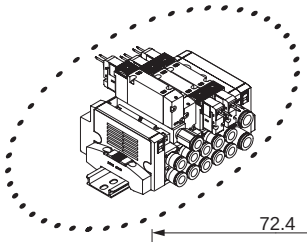

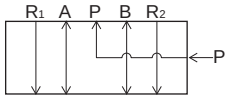

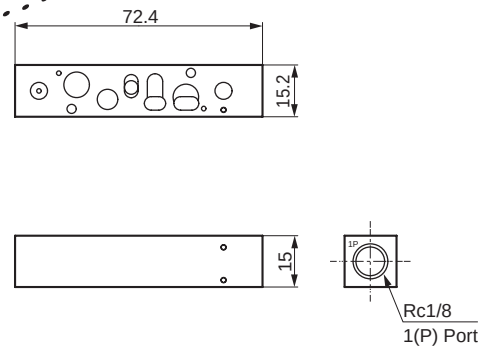

Dimensions when mounted

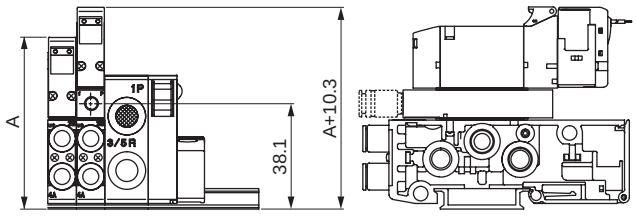

Dimensions when mounted

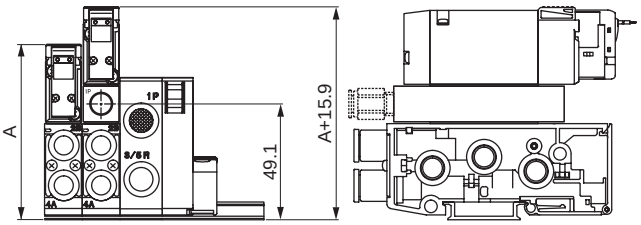

Note: For A dimensions, check the dimensions of the respective specifications.

Related products Exhaust spacer/pilot check valve

● Exhaust spacer

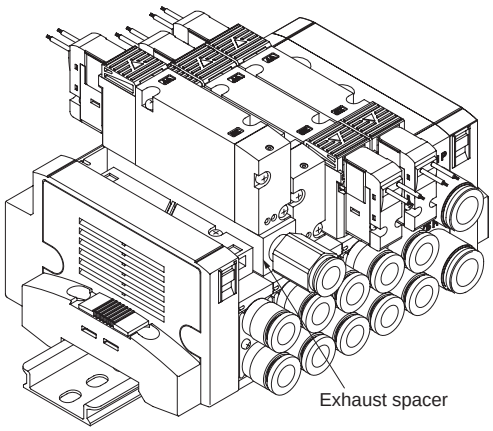

Specifications

Model No.	P→A/B		A/B→R		Weight g
	C[dm³/(s·bar)]	b	C[dm³/(s·bar)]	b	
4G1	0.94	0.28	0.68	0.33	7
4G2	1.5	0.24	1.9	0.24	34

*1: Values are when a valve is mounted.
*2: Effective cross-sectional area S and sonic conductance C are converted as S ≈ 5.0 x C.

How to order discrete units

4G ② R − R − GWS6

Ⓐ Exhaust spacer model No.
Ⓑ Port size

Code	Description	Model No. 4GD1	4GE1	4GD2	4GE2
Ⓐ Exhaust spacer model No.					
1	For 4G1	●			
2	For 4G2			●	
Ⓑ Port size					
Blank	M5 thread (4G1), Rc thread (4G2)	●		●	
GWS4	ø4 fitting	●			
GWS6	ø6 fitting	●		●	
GWS8	ø8 fitting			●	

is not available.

Attachments: 4G1 set screws (2), dedicated gasket (1)
4G2 set screws (2), PR check valves (2), body gasket (1)

⚠ Precautions for model selection

*1 Specify the positions and quantity of exhaust spacers for manifold in the manifold specifications sheet.
*2 If the A/B port fitting is elbow, turn the exhaust port of the exhaust spacer toward the reverse side (“a” solenoid side).
*3 If the elbow upward A/B port fitting is used for the reduced wiring manifold, the exhaust spacer cannot be selected.
*4 Combination with the masking plate is not supported.

Dimensions

● 4G1

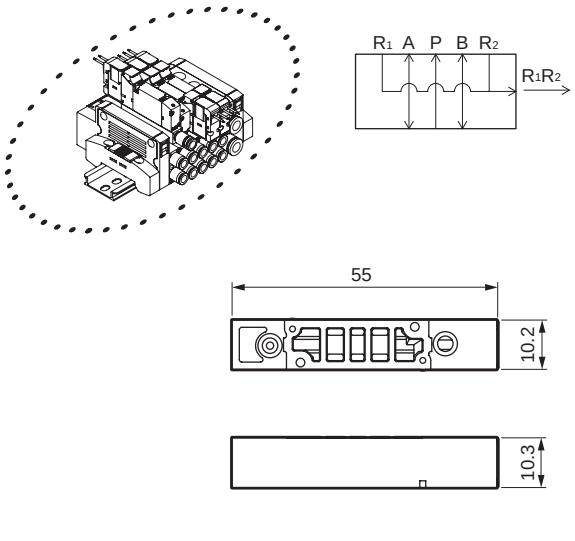

● 4G2

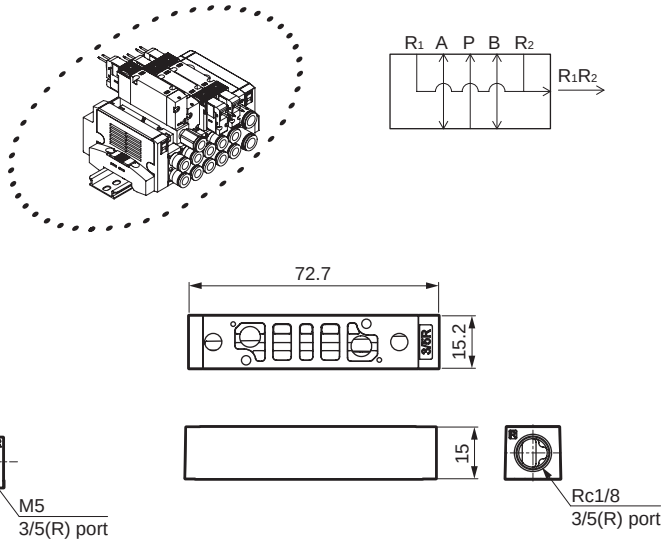

Dimensions when mounted

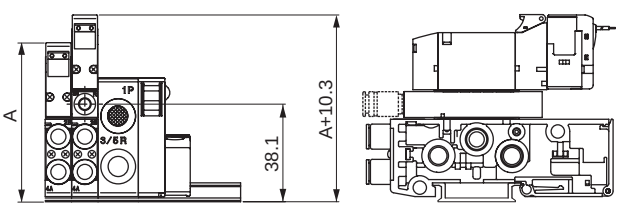

Dimensions when mounted

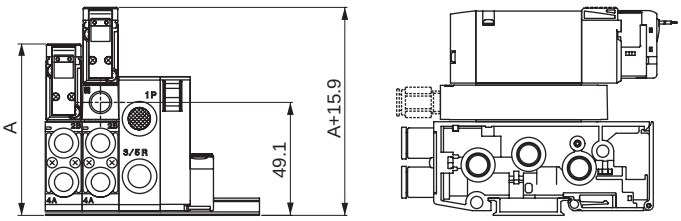

Note: For A dimensions, check the dimensions of the respective specifications.

● Pilot check valve

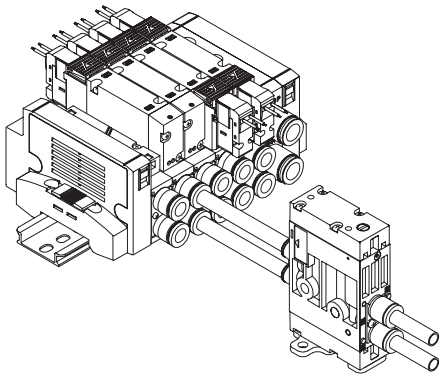

Refer to page 581 for details.

Related parts

1. MN4G cartridge push-in fitting for supply and exhaust block

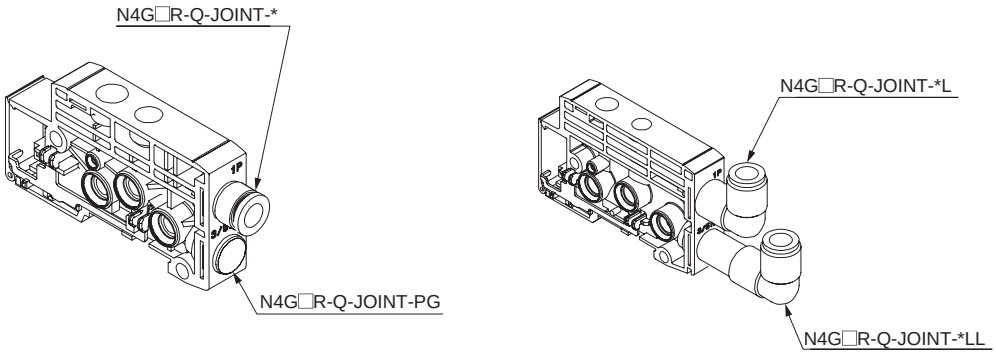

1.1 MN4G1 supply and exhaust block, fitting for 1(P), 3/5(R)

Bore size	Part model No.
ø6 straight	N4G1R-Q-JOINT-6
ø8 straight	N4G1R-Q-JOINT-8
ø6 elbow	N4G1R-Q-JOINT-6L,6LL
ø8 elbow	N4G1R-Q-JOINT-8L,8LL
Plug cartridge	N4G1R-Q-JOINT-PG

1.2 MN4G2 supply and exhaust block, fitting for 1(P), 3/5 (R)

Bore size	Part model No.
ø8 straight	N4G2R-Q-JOINT-8
ø10 straight	N4G2R-Q-JOINT-10
ø8 elbow	N4G2R-Q-JOINT-8L,8LL
ø10 elbow	N4G2R-Q-JOINT-10L,10LL
Plug cartridge	N4G2R-Q-JOINT-PG

How to fill out block manifold MN4G series manifold specifications sheet

● Manifold model No. (example)

MN 4 GD1 8 0R- CX - T50 W H - 8 - 3

Ⓐ Model No. Ⓑ Solenoid position Ⓒ Port size Ⓓ Electrical connection (reduced wiring connection) Ⓔ Terminal and connector pin array (Note: Fill in for reduced wiring.) Ⓕ Option Ⓖ Station No. Ⓗ Voltage

When filling in this field, select the model No. from "Block configurations" (pages 669 to 682).

Part name	Model No.	Layout position 1	2	3	4	5	6	7	8	9	10	11	12	13	14	15	16	17	18	19	20	21	22	23	24	25	26	27	28	29	30	Quantity
Wiring block (Pages 674 and 675)	N4G1R-T 50	○																														1
Valve block with solenoid valve (page 670)	N4GD1 1 0R- C4		○	○																												2
	N4GD1 2 0R- C6					○																										1
	N4GD1 3 0R- C4				○																											1
	N4GD1 0R-																															
	N4GD1 0R-																															
	N4GD1 0R-																															
	N3GD1 1 0R- C4									○	○	○																				3
	N3GD1 0R-																															
Valve block with masking plate (page 670)	N4GA1R-MP																															
	N4GA1R-MPS																															
	N4GA1R-MPD						○																									1
Supply and exhaust block (page 672)	N4G1R-Q - 8L							○					○																			2
	N4G1R-Q -																															
	N4G1R-Q -																															
Partition block (page 673)	N4G1R-S A								○																							1
	N4G1R-S																															
	N4G1R-S																															
End block (page 672)	N4G1R-E R													○																		1
	N4G1R-E																															

Mounting rail	L_2= (How to calculate length on next page)	Blanking plug								Silencer				Tag plate (attachment)		Accessory
		GWP4-B		GWP6-B		GWP8-B				SLW-H6		SLW-H8		A	○	
		Cable with D sub-connector		4GR-CABLE-D0□-□						Push-in fitting tube remover (attached as standard)		☑ Not required (check the box)				

Place a check here if the tube remover (standard attached product) is not required.

* A circuit diagram of the above manifold model No. (example) is provided on the following page. Use for reference.

Preparing manifold specifications sheet

● Complete from the left end, with the piping port facing forward.
(Write the block model numbers and positions you determined referring to the block configurations (pages 669 to 682).)
● Write the total number of blocks specified in the quantity field at the table far right.
● Mark a circle for attached products that are required.
● Indicate the mounting rail length. (Fill in only when a length other than the standard length is required.)
● As there are manifold specifications sheet for each of the various series, fill in the form for the corresponding specifications.

- MN4GD1: Page 687
- MN4GE1: Page 688
- MN4GD2: Page 689
- MN4GE2: Page 690
- MN4GDX1/2 (Mix manifold): Page 691
- MN4GEX1/2 (Mix manifold): Page 692

● Mounting rail model No.: N4GR-BAA Length

Mounting rail length (L2)

(1) Determine the rail length using the calculation method shown below.
The obtained length is standard.
(2) For standard length, length (L2) is not required on the specification sheet.
Indicate the length when using a non-standard length.

● How to determine the length of the mounting rail

Manifold length (L1) = (A x Valve block Quantity) + (B x Supply and exhaust block Quantity) + (C x Partition block Quantity) + D (Wiring block) + E (Mixed block)

Mounting rail length (L2) = L2' x 12.5 A, B, C, D, and E indicate the length (width) of each block.

$$L2': \frac{L1+40}{12.5} \rightarrow \text{decimals rounded up}$$

Rail mounting pitch (L3) = L2-12.5

Block length (width) dimensions table (mm)

			MN4GD/E1	MN4GD/E2	MN4G1/2MIX	
					MN4GD/E1	MN4GD/E2
A	Valve block		10.5	16	10.5	16
B	Supply and exhaust block		16	18	16	18
C	Partition block		10.5	10.5	10.5	10.5
D	Individual wiring		41.2	46.2	43.7	
	Wiring block for reduced wiring	T10/T11	83.9	86.4	86.4	
		T10R/T11R	83.9	86.4	83.9	
		T30/T5*	69.4	71.9	71.9	
		T30R/T5*R	69.4	71.9	69.4	
		T6G1	143.6	146.1	146.1	
		T7*	64.4	66.9	66.9	
		T8*	64.4	66.9	66.9	
E	Mixed block				16	

* The end block is included in the wiring block.

● Mounting rail length quick reference table

L1: Manifold Length	47.5 or less	47.5 Over to 60 or less	60 to 72.5	72.5 to 85	85 to 97.5	97.5 to 110	110 to 122.5	122.5 to 135	135 to 147.5	147.5 to 160	160 to 172.5	172.5 to 185	185 to 197.5	197.5 to 210	210 to 222.5	222.5 to 235	235 to 247.5	247.5 to 260	260 to 272.5	272.5 to 285	285 to 297.5	297.5 to 310	310 to 322.5	322.5 to 335	335 to 347.5	347.5 to 360
L2: Rail Length	87.5	100	112.5	125	137.5	150	162.5	175	187.5	200	212.5	225	237.5	250	262.5	275	287.5	300	312.5	325	337.5	350	362.5	375	387.5	400
Pitch L3	75	87.5	100	112.5	125	137.5	150	162.5	175	187.5	200	212.5	225	237.5	250	262.5	275	287.5	300	312.5	325	337.5	350	362.5	375	387.5

*1: When L1 exceeds this table, calculate the length by referring to "How to calculate the length of the mounting rail".

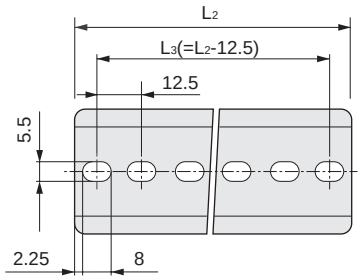

How to fill out wiring specifications sheet

Not required for standard wiring and double wiring.

● Wiring specifications sheet (example)

* The following example has been filled out in accordance with the manifold specifications sheet on the previous page.

Connector pin No.				Valve No.																							
T50/T50R	**T51/T51R**	**T52/T52R**	**T53/T53R**	1	2	3	4	5	6	7	8	9	10	11	12	13	14	15	16	17	18	19	20	21	22	23	24
1	1	1	1	**a**																							
2	2	2	2		**a**																						
3	3	3	3				**a**																				
4	4	4	4				**b**																				
5	5	5	5					**a**																			
6	6	6	6					**b**																			
7	7	7	7			**a**																					
8	8	8	8			**b**																					
9 - Power supply	9	9 COM	9																								
10 + (COM) Power supply	10	10 COM	10																								
11	11		11						**a**																		
12	12		12							**a**																	
13	13		13								**a**																
14	14		14																								
15	15		15																								
16	16		16																								
17	17		17																								
18	18		18																								
19 - Power supply	19 COM		19																								
20 + (COM) Power supply	20 COM		20																								
			21																								
			22																								
			23																								
			24																								
			25 COM																								
			26 COM																								

*: Note that when the wiring method is T50/T50R, the COM polarity will be + (positive).

● Notes on wiring specifications

(1) Fill in and attach to the manifold specifications sheet for anything other than the standard wiring or double wiring. Consult with CKD, as products will be made to order in this case.

(2) The valve No. is determined by counting the valve blocks only in order from the left with the ports facing forward. Note that this differs from the installation position numbers.

(3) As the connector pin No. and valve No. differ for each reduced wiring method (T1*/T30/T5*/T6G1/T7*/T8*), fill out the form upon reviewing the notes (pages 816 to 835) for each.

(4) Wiring (socket assembly) is included with valve blocks with masking plates. A side only for "-MPS". Both A and B sides for "-MPD".

(5) Double solenoids or 3-position solenoid valves cannot be assembled to "-MPS". Order valve block with solenoid valve and carry out expansion.

(6) It is not possible to install spare wires for station expansion in advance. Wire the socket assembly of the solenoid valve for expansion of stations. Refer to page 836 for instructions on how to expand stations.

Reference circuit diagram Simplified circuit diagram of manifold model No. (example) from previous page

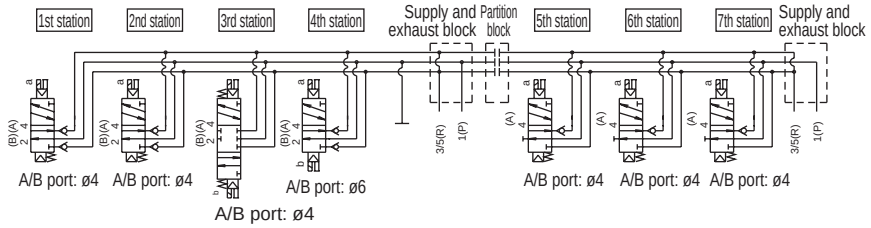

* The manifold station numbers are set in order from the left with the piping port facing forward.
(Wiring blocks, supply and exhaust blocks, partition block, and end block are not included in the manifold station No.)

* Select the model No. from block configuration (pages 669 to 682) and each specification model No. page.

* With piping port facing front, arrangement positions are set in order from the left.

MN4GD1 Block manifold specifications sheet

● Contact ● Quantity Set ● Delivery date /

Issued / /

Slip No.	Order No.

Company

Contact

Order No.

● Manifold model No.

MN ☐ GD1 ☐ 0R - ☐ - ☐ ☐ ☐ - ☐ - ☐

Ⓐ Model No. Ⓑ Solenoid position Ⓒ Port size Ⓓ Electrical connections (Reduced wiring connection) Ⓔ Terminal/connector pin array (Note: Fill in for reduced wiring.) Ⓕ Option Ⓖ Station No. Ⓗ Voltage

When filling in this field, select the model No. from "Block configurations" (pages 669 to 682).

Part name (Page)	Model No.	Layout position 1 2 3 4 5 6 7 8 9 10 11 12 13 14 15 16 17 18 19 20 21 22 23 24 25 26 27 28 29 30	Quantity
Wiring block (pages 674 and 675)	N4G1R-T ☐		
Valve block with solenoid valve (page 670)	N4GD1 ☐ 0R- ☐		
	N4GD1 ☐ 0R- ☐		
	N4GD1 ☐ 0R- ☐		
	N4GD1 ☐ 0R- ☐		
	N4GD1 ☐ 0R- ☐		
	N4GD1 ☐ 0R- ☐		
	N3GD1 ☐ 0R- ☐		
	N3GD1 ☐ 0R- ☐		
Valve block with masking plate (page 670)	N4GA1R-MP		
	N4GA1R-MPS		
	N4GA1R-MPD		
Air supply spacer (page 679)	4G1R-P- ☐		
	4G1R-P- ☐		
Exhaust spacer (page 681)	4G1R-R- ☐		
	4G2R-R- ☐		
Supply and exhaust block (page 672)	N4G1R-Q ☐ - ☐		
	N4G1R-Q ☐ - ☐		
	N4G1R-Q ☐ - ☐		
Partition block (Page 673)	N4G1R-S ☐		
	N4G1R-S ☐		
	N4G1R-S ☐		
End block (Page 672)	N4G1R-E ☐		
	N4G1R-E ☐		

Mounting rail	Blanking plug						Silencer				Tag plate (attachment)		Accessory
L_2= ☐ * Write an integer multiple of 12.5. (How to determine the length page 685)	GWP4-B		GWP6-B		GWP8-B		SLW-H6		SLW-H8		A		
	Cable with D sub-connector		4GR-CABLE-D0☐-☐				Push-in fitting tube remover (attached as standard) ☐ Not required (check the box)						

MN4GE1 Block manifold specifications sheet

● Contact ● Quantity Set ● Delivery date /

Slip No. | Order No.

● Manifold model No.

Issued / /

Company

Contact

Order No.

MN □ GE1 □ 0R - □ - □ □ □ - □ - □

Ⓐ Model No. Ⓑ Solenoid position Ⓒ Port size Ⓓ Electrical connections Ⓔ Terminal/connector pin Ⓕ Option Ⓖ Station No. Ⓗ Voltage

When filling in this field, select the model No. from "Block configurations" (pages 669 to 682). (Reduced wiring connection) array (Note: Fill in for reduced wiring.)

Part name (Page)	Model No.	Layout position 1	2	3	4	5	6	7	8	9	10	11	12	13	14	15	16	17	18	19	20	21	22	23	24	25	26	27	28	29	30	Quantity
Wiring block (pages 674 and 675)	N4G1R-T□																															
Valve block with solenoid valve (page 670)	N4GE1□0R-□																															
	N4GE1□0R-□																															
	N4GE1□0R-□																															
	N4GE1□0R-□																															
	N4GE1□0R-□																															
	N4GE1□0R-□																															
	N3GE1□0R-□																															
	N3GE1□0R-□																															
Valve block with masking plate (page 670)	N4GB1R-MP-□																															
	N4GB1R-MPS-□																															
	N4GB1R-MPD-□																															
Air supply spacer (page 679)	4G1R-P-□																															
	4G1R-P-□																															
Exhaust spacer (page 681)	4G1R-R-□																															
	4G2R-R-□																															
Supply and exhaust block (page 672)	N4G1R-Q□-□																															
	N4G1R-Q□-□																															
	N4G1R-Q□-□																															
Partition block (page 673)	N4G1R-S□																															
	N4G1R-S□																															
	N4G1R-S□																															
End block (page 672)	N4G1R-E□																															
	N4G1R-E□																															

Mounting rail	Blanking plug						Silencer				Tag plate (attachment)				Accessory
L_2= □	GWP4-B		GWP6-B		GWP8-B		SLW-H6		SLW-H8		B1		B2		
* Write an integer multiple of 12.5. (How to determine the length page 685)	Cable with D sub-connector		4GR-CABLE-D0□-□					Push-in fitting tube remover (attached as standard) □ Not required (check the box)							

MN4GD2 Block manifold specifications sheet

● Contact ● Quantity Set ● Delivery date /

Slip No. | Order No.

Issued / /

Company

Contact

Order No.

● Manifold model No.

MN [ ] **GD2** [ ] **0R** - [ ] - [ ] [ ] [ ] - [ ] - [ ]

Ⓐ Model No. Ⓑ Solenoid position Ⓒ Port size Ⓓ Electrical connections (Reduced wiring connection) Ⓔ Terminal/connector pin array (Note: Fill in for reduced wiring.) Ⓕ Option Ⓖ Station No. Ⓗ Voltage

When filling in this field, select the model No. from "Block configurations" (pages 669 to 682).

Part name (Page)	Model No.	Layout position 1	2	3	4	5	6	7	8	9	10	11	12	13	14	15	16	17	18	19	20	21	22	23	24	25	26	27	28	29	30	Qty.
Wiring block (pages 674 and 675)	**N4G2R-T** [ ]																															
Valve block with solenoid valve (page 670)	**N4GD2** [ ] **0R-** [ ]																															
	N4GD2 [ ] **0R-** [ ]																															
	N4GD2 [ ] **0R-** [ ]																															
	N4GD2 [ ] **0R-** [ ]																															
	N4GD2 [ ] **0R-** [ ]																															
	N4GD2 [ ] **0R-** [ ]																															
	N3GD2 [ ] **0R-** [ ]																															
	N3GD2 [ ] **0R-** [ ]																															
Valve block with masking plate (page 670)	**N4GA2R-MP**																															
	N4GA2R-MPS																															
	N4GA2R-MPD																															
Air supply spacer (page 679)	**4G2R-P-** [ ]																															
	4G2R-P- [ ]																															
Exhaust spacer (page 681)	**4G1R-R-** [ ]																															
	4G2R-R- [ ]																															
Supply and exhaust block (page 672)	**N4G2R-Q** [ ] - [ ]																															
	N4G2R-Q [ ] - [ ]																															
	N4G2R-Q [ ] - [ ]																															
Partition block (page 673)	**N4G2R-S** [ ]																															
	N4G2R-S [ ]																															
	N4G2R-S [ ]																															
End block (page 672)	**N4G2R-E** [ ]																															
	N4G2R-E [ ]																															

Mounting rail		Blanking plug				Silencer		Tag plate (attachment)		Accessory
	L_2= [ ]	**GWP4-B**		**GWP8-B**		**SLW-H8**		**A**		
	* Write an integer multiple of 12.5. (How to determine the length page 685)	**GWP6-B**		**GWP10-B**		**SLW-H10**				
		Cable with D sub-connector		4GR-CABLE-D0□-□						

MN4GE2 Block manifold specifications sheet

● Contact ● Quantity Set ● Delivery date /

Issued / /

Slip No.	Order No.

Company

Contact

Order No.

● Manifold model No.

MN [A] GE2 [B] 0R - [C] - [D] [E] [F] - [G] - [H]

A Model No. B Solenoid position C Port size D Electrical connection (reduced wiring connection) E Terminal/connector pin array (Note: Fill in for reduced wiring.) F Option G Station No. H Voltage

When filling in this field, select the model No. from "Block configurations" (pages 669 to 682).

Part name (Page)	Model No.	Layout position 1	2	3	4	5	6	7	8	9	10	11	12	13	14	15	16	17	18	19	20	21	22	23	24	25	26	27	28	29	30	Quantity
Wiring block (pages 674 and 675)	N4G2R-T																															
Valve block with solenoid valve (page 670)	N4GE2 0R-																															
	N4GE2 0R-																															
	N4GE2 0R-																															
	N4GE2 0R-																															
	N4GE2 0R-																															
	N4GE2 0R-																															
	N3GE2 0R-																															
	N3GE2 0R-																															
Valve block with masking plate (page 670)	N4GB2R-MP -																															
	N4GB2R-MPS-																															
	N4GB2R-MPD-																															
Air supply spacer (page 679)	4G2R-P-																															
	4G2R-P-																															
Exhaust spacer (page 681)	4G1R-R-																															
	4G2R-R-																															
Supply and exhaust block (page 672)	N4G2R-Q -																															
	N4G2R-Q -																															
	N4G2R-Q -																															
Partition block (page 673)	N4G2R-S																															
	N4G2R-S																															
	N4G2R-S																															
End block (page 672)	N4G2R-E																															
	N4G2R-E																															

Mounting rail	Blanking plug				Silencer		Tag plate (attachment)		Accessory
L_2=	GWP4-B		GWP8-B		SLW-H8		B		
* Write an integer multiple of 12.5. (How to determine the length page 685)	GWP6-B		GWP10-B		SLW-H10				
	Cable with D sub-connector		4GR-CABLE-D0□-□						

MN4GD1/2 Mix manifold specifications sheet

● Contact ● Quantity Set ● Delivery date /

Slip No. | Order No.

Issued / /

Company

Contact

Order No.

● Manifold model No.

MN □ GDX12R - □ - □ - □ □ - □ - □

Ⓐ Model No. Ⓒ Port size Ⓓ Electrical connection (reduced wiring connection) Ⓔ Terminal/connector pin array (Note: Fill in for reduced wiring.) Ⓕ Option Ⓖ Station No. Ⓗ Voltage

When filling in this field, select the model No. from "Block configurations" (pages 669 to 682).

Part name (Page)	Model No.	Layout position 1	2	3	4	5	6	7	8	9	10	11	12	13	14	15	16	17	18	19	20	21	22	23	24	25	26	27	28	29	30	Qty.
Wiring block (pages 674 and 675)	N4G □ R-T □																															
Valve block with solenoid valve (page 670)	N4GD □ 0R- □																															
	N4GD □ 0R- □																															
	N4GD □ 0R- □																															
	N4GD □ 0R- □																															
	N4GD □ 0R- □																															
	N4GD □ 0R- □																															
	N3GD □ 0R- □																															
	N3GD □ 0R- □																															
Valve block with masking plate (page 670)	N4GA □ R-MP																															
	N4GA □ R-MPS																															
	N4GA □ R-MPD																															
Air supply spacer (page 679)	4G1R-P- □																															
	4G2R-P- □																															
Exhaust spacer (page 681)	4G1R-R- □																															
	4G2R-R- □																															
Mixed block (page 673)	N4G12R-MIX																															
Supply and exhaust block (page 672)	N4G □ R-Q □ - □																															
	N4G □ R-Q □ - □																															
	N4G □ R-Q □ - □																															
Partition block (page 673)	N4G □ R-S □																															
	N4G □ R-S □																															
	N4G □ R-S □																															
End block (page 672)	N4G □ R-E □																															
	N4G □ R-E □																															
Mounting rail	L_2= □ * Write an integer multiple of 12.5. (How to determine the length page 685)	Blanking plug: GWP □ -B			GWP □ -B			GWP □ -B			GWP □ -B			Silencer: SLW-H □			SLW-H □															Accessory
		Cable with D sub-connector			4GR-CABLE-D0□-□						Push-in fitting tube remover (attached as standard) □ Not required (check the box)																					

MN4GE1/2 Mix manifold specifications sheet

● Contact ● Quantity Set ● Delivery date /

Issued / /

Slip No.	Order No.

Company

Contact

Order No.

● Manifold model No.

MN GEX12R- - - - - -

Ⓐ Model No. Ⓒ Port size Ⓓ Electrical connection (reduced wiring connection) Ⓔ Terminal/connector pin array (Note: Fill in for reduced wiring.) Ⓕ Option Ⓖ Station No. Ⓗ Voltage

When filling in this field, select the model No. from "Block configurations" (pages 669 to 682).

Part name	Model No.	Layout position 1	2	3	4	5	6	7	8	9	10	11	12	13	14	15	16	17	18	19	20	21	22	23	24	25	26	27	28	29	30	Quantity
Wiring block (pages 674 and 675)	N4G R-T																															
Valve block with solenoid valve (page 670)	N4GE 0R-																															
	N4GE 0R-																															
	N4GE 0R-																															
	N4GE 0R-																															
	N4GE 0R-																															
	N4GE 0R-																															
	N3GE 0R-																															
	N3GE 0R-																															
Valve block with masking plate (page 670)	N4GB R-MP-																															
	N4GB R-MPS-																															
	N4GB R-MPD-																															
Air supply spacer (page 679)	4G1R-P-																															
	4G2R-P-																															
Exhaust spacer (page 681)	4G1R-R-																															
	4G2R-R-																															
Mixed block (page 673)	N4G12R-MIX																															
Supply and exhaust block (page 672)	N4G R-Q -																															
	N4G R-Q -																															
	N4G R-Q -																															
Partition block (page 673)	N4G R-S																															
	N4G R-S																															
	N4G R-S																															
End block (page 672)	N4G R-E																															
	N4G R-E																															

Mounting rail	Blanking plug				Silencer		Accessory
L_2=	GWP -B	GWP -B	GWP -B	GWP -B	SLW-H	SLW-H	
* Write an integer multiple of 12.5. (How to determine the length page 685)	Cable with D sub-connector	4GR-CABLE-D0□-□		Push-in fitting tube remover (attached as standard) □ Not required (check the box)			

Common terminal block (T10/T11) wiring specifications sheet

* Fill in and attach to the manifold specifications sheet for anything other than the standard wiring or double wiring. (Available as a custom order)
* Not required with standard wiring/double wiring.

Connector pin No.		Valve No.																							
T10 ☐	**T11** ☐	1	2	3	4	5	6	7	8	9	10	11	12	13	14	15	16	17	18	19	20	21	22	23	24
1	1																								
2	2																								
3	3																								
4	4																								
5	5																								
6	6																								
7	7																								
8	8																								
9	9																								
10	10																								
11	11																								
12	12																								
13	13																								
14	14																								
15	15																								
16	16																								
COM	17																								
COM	18																								
	19																								
	20																								
	21																								
	22																								
	23																								
	24																								
	COM																								
	COM																								

D sub-connector (T30) wiring specifications sheet

* Fill in and attach to the manifold specifications sheet for anything other than the standard wiring or double wiring. (Available as a custom order)
* Not required with standard wiring/double wiring.

Connector pin No.	Valve No.																								
T30 ☐	1	2	3	4	5	6	7	8	9	10	11	12	13	14	15	16	17	18	19	20	21	22	23	24
1																								
14																								
2																								
15																								
3																								
16																								
4																								
17																								
5																								
18																								
6																								
19																								
7																								
20																								
8																								
21																								
9																								
22																								
10																								
23																								
11																								
24																								
12																								
25																								
13(COM)																								

Flat cable connector (T50/T51/T52/T53) wiring specifications sheet

* Fill in and attach to the manifold specifications sheet for anything other than the standard wiring or double wiring. (Available as a custom order)
* Not required with standard wiring/double wiring.

Connector pin No.				Valve No.																							
T50/T50R	**T51/T51R**	**T52/T52R**	**T53/T53R**	1	2	3	4	5	6	7	8	9	10	11	12	13	14	15	16	17	18	19	20	21	22	23	24
1	1	1	1																								
2	2	2	2																								
3	3	3	3																								
4	4	4	4																								
5	5	5	5																								
6	6	6	6																								
7	7	7	7																								
8	8	8	8																								
9 - Power supply	9	9 COM	9																								
10 + (COM) Power supply	10	10 COM	10																								
11	11		11																								
12	12		12																								
13	13		13																								
14	14		14																								
15	15		15																								
16	16		16																								
17	17		17																								
18	18		18																								
19 - Power supply	19 COM		19																								
20 + (COM) Power supply	20 COM		20																								
			21																								
			22																								
			23																								
			24																								
			25 COM																								
			26 COM																								

*: Note that when the wiring method is T50/T50R, the COM polarity will be + (positive).

Serial transmission (T6G1/T7*) wiring specifications sheet

* Fill in and attach to the manifold specifications sheet for anything other than the standard wiring or double wiring. (Available as a custom order)
* Not required with standard wiring/double wiring.

Serial transmission	Connector pin No.		Valve No.														
	T6G1	**T7***	1	2	3	4	5	6	7	8	9	10	11	12	13	14	15	16
Connector T6G1: CC-Link 16 points	1	1																
	2	2																
	3	3																
	4	4																
	5	5																
	6	6																
	7	7																
	8	8																
	9	9																
	10 COM	10																
	11	11																
	12	12																
Thin slot-insertion type T7D1: DeviceNet 16 points T7G1: CC-Link 16 points T7L1: SAVE NET 16 points T7S1: CompoNet 16 points (NPN) T7SP1: CompoNet 16 points (PNP)	13	13																
	14	14																
	15	15																
	16	16																
	17	17																
	18	18																
	19	19																
	20 COM	20																

Serial transmission (T8*) wiring specifications sheet

* Fill in and attach to the manifold specifications sheet for anything other than the standard wiring or double wiring. (Available as a custom order)
* Not required with standard wiring/double wiring.

Serial transmission			
T8G1	CC-Link	NPN	16 points
T8G2			32 points
T8GP1		PNP	16 points
T8GP2			32 points
T8P1	PROFIBUS-DP	NPN	16 points
T8P2			32 points
T8PP1		PNP	16 points
T8PP2			32 points
T8EC1	EtherCAT	NPN	16 points
T8EC2			32 points
T8ECP1		PNP	16 points
T8ECP2			32 points
T8EN1	EtherNet/IP	NPN	16 points
T8EN2			32 points
T8ENP1		PNP	16 points
T8ENP2			32 points
T8D1	DeviceNet	NPN	16 points
T8D2			32 points
T8DP1		PNP	16 points
T8DP2			32 points
T8EB1	CC-Link IEF Basic	NPN	16 points
T8EB2			32 points
T8EBP1		PNP	16 points
T8EBP2			32 points
T8EP1	PROFINET	NPN	16 points
T8EP2			32 points
T8EPP1		PNP	16 points
T8EPP2			32 points

Connector pin No.	Valve No. 1	2	3	4	5	6	7	8	9	10	11	12	13	14	15	16	17	18	19	20	21	22	23	24
1																								
2																								
3																								
4																								
5																								
6																								
7																								
8																								
9																								
10																								
11																								
12																								
13																								
14																								
15																								
16																								
17																								
18																								
19																								
20																								
21																								
22																								
23																								
24																								
25																								
26																								
27																								
28																								
29																								
30																								
31																								
32																								

MEMO

4GA4/4GB4

Metal base

Pilot operated 5-port valve

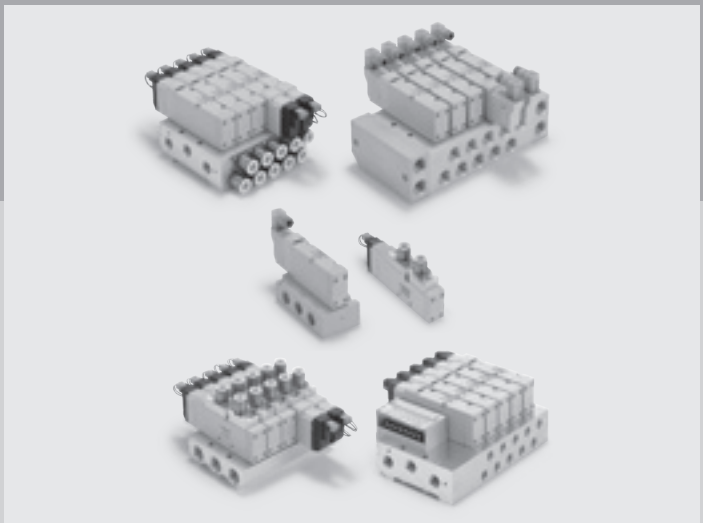

CONTENTS

Product introduction 698
Series variation 700
Electrical connections list (wire connections/circuit) 702

Discrete valve

● Body piping (4GA4) 704
● Base piping (4GB4) 716

Individual wiring manifold

● Body piping (M4GA4) 728
● Base piping (M4GB4) 742

Reduced wiring manifold

● Body piping (M4GA4-T*)
· Common terminal block/D-sub-connector/flat cable connector 760
· Serial transmission 770
● Base piping (M4GB4-T*)
· Common terminal block/D-sub-connector/flat cable connector 776
· Serial transmission 788

Related products (air supply spacer/exhaust spacer/silencer/plug/masking plate kit) 796
Parts list 800
Manifold specifications sheet 808
Technical data
(1) Pneumatic system selection guide 804
(2) Notes on wiring 815
(3) How to expand reduced wiring manifold 836
⚠ Safety precautions 850

Large flow rate and long service life.

The properties of the popular 4G1/2/3 series have been passed on to realize the enhanced 4G series. All factors required by the times, including environmental performance, security, operability and reliability, have been improved with this large flow rate pilot operated 5-port valve 4G4 series (metal base).
Extensive electrical connections support various needs.

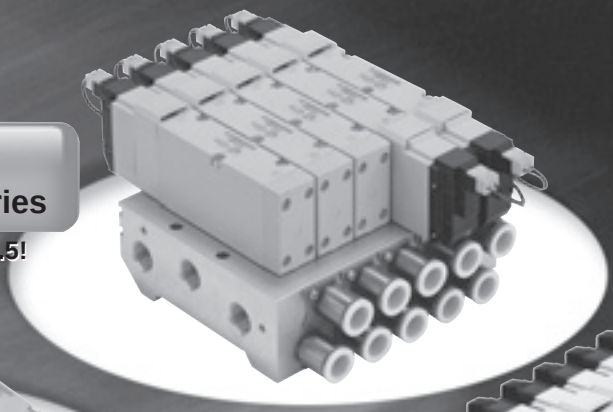

M4G A/B 4 Series

Manifold max. C value of 9.5!

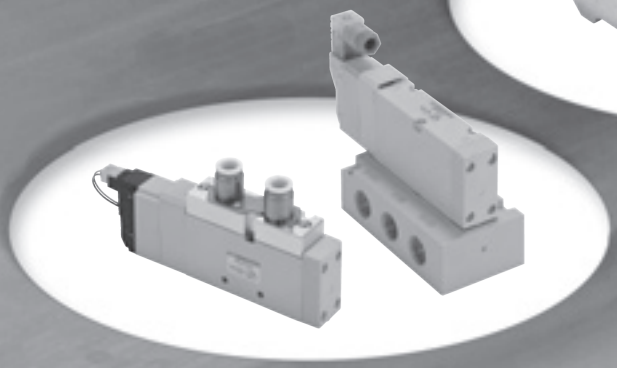

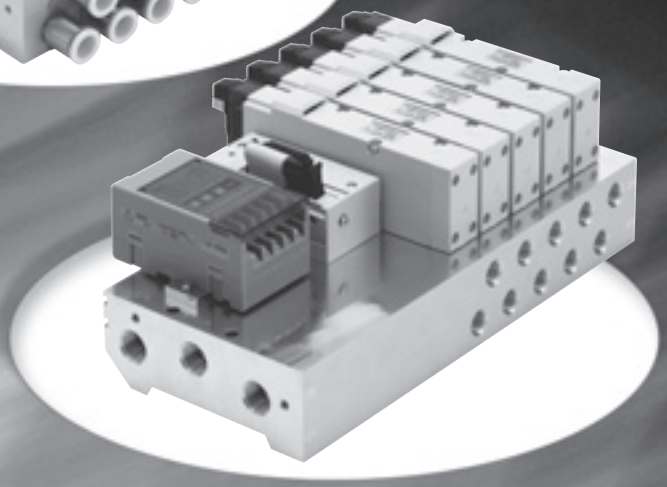

Discrete valve/body piping/base piping

4G A/B 4 Series

Max. C value of 15 with a compact body!

Reduced wiring manifold

M4G A/B 4-T* Series

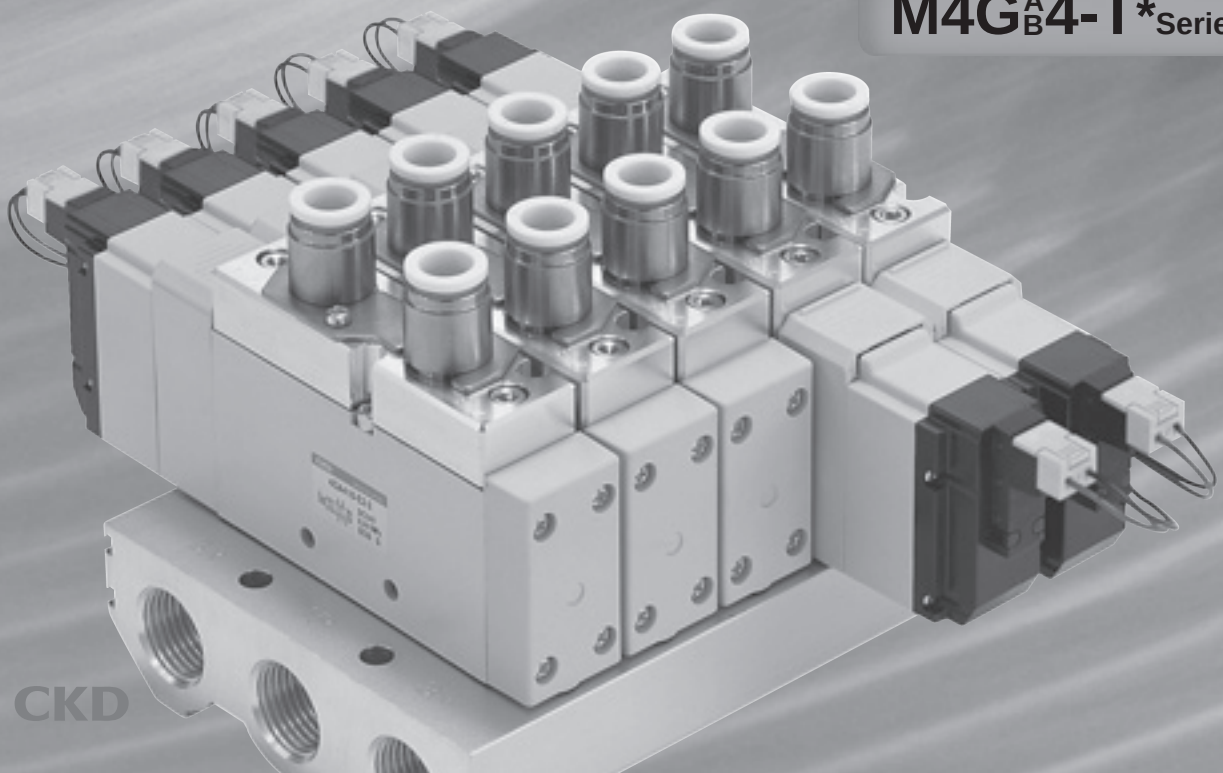

CKD

5-port pilot operated valve

4G4 Series

Improved operability

Tool-free manual operating device

Hand alone operation is possible.
Locking/non-locking common use type.



Wiring connector upward/lateral common

Just change the connector insert position, and upward and lateral connecting portions can be freely changed.



P/R-port outlet from front surface (option: Q)

Thanks to the supply and exhaust block, the P/R port outlet from front surface is made possible.

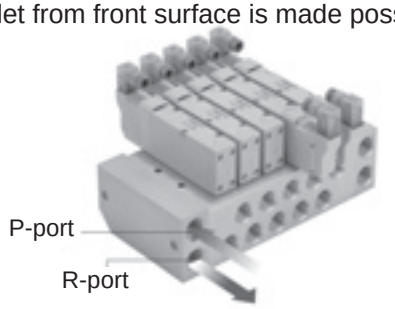

Various electrical connections

CC-Link, common terminal block, D-sub-connector and flat cable connector are available for serial transmission.



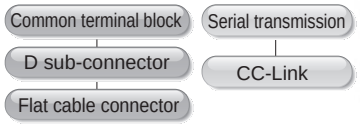

Improved reliability

Long service life

Service life is further extended by improvements in structure of sliding section, packing, etc.

The supply port is equipped with filter

Prevents the entry of foreign matter, and resolves problems.
Can be also equipped to A/B port. (Option)

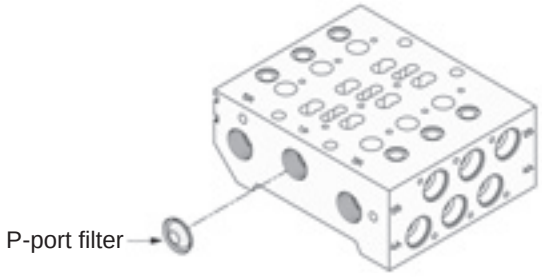

P-port filter (standard) example of combination

Improved safety

Safety is ensured with protective cover

Prevents wrong operation of manual override due to external force, etc.
Safe design so that the cover cannot be closed when the lock is engaged. (PAT.)

Improved environment-friendliness

RoHS compliant

Halogen and vinyl chloride materials are excluded from lead wire.
Has an environment-friendly design which is compliant with the RoHS Directive.

RoHS

Series external appearance						Model No.	Position Number of solenoids JIS symbol	Valve performance		Voltage (v)	Switching position		
								Flow characteristics C [dm³/(s·bar)] (*1)	Applicable cylinder bore size (ø)		2-position		
											Single	Double	
Single unit	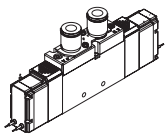	Body piping	5-port			4GA4	● 5-port valve 2-position single 4 2 (A)(B) a 5 1 3 (R1)(P)(R2) 2-position double 4 2 (A)(B) a b 5 1 3 (R1)(P)(R2) 3-position All ports closed 4 2 (A)(B) a b 5 1 3 (R1)(P)(R2) 3-position A/B/R connection 4 2 (A)(B) a b 5 1 3 (R1)(P)(R2) 3-position P/A/B connection 4 2 (A)(B) a b 5 1 3 (R1)(P)(R2)	7.5 to 8.7	100 to 140	100 AC 110 AC 24 DC 12 DC	●	●	
	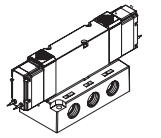	Base piping	5-port			4GB4		12 to 15	125 to 160		●	●	
Individual wiring manifold (metal base)	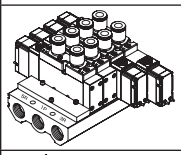	Body piping	Direct mount			M4GA4		8.2 to 9.3	100 to 140		●	●	
	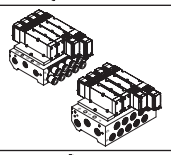	Base piping	Direct mount			M4GB4 (*2)		6.8 to 7.1 8.7 to 9.5 (*3)	100 to 140	100 AC 110 AC 24 DC 12 DC	●	●	
	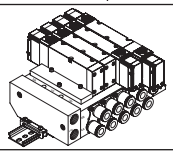		DIN rail Mount (-D)			M4GB4 (*4)		6.8 to 7.1	100 to 125		●	●	
Reduced wiring manifold (metal base)	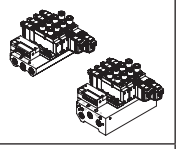	Body piping	Direct mount	Common terminal block (-T1*) D-sub-connector (-T30) Flat cable connector (-T5*)		M4GA4		8.2 to 9.3	100 to 140	24 DC 12 DC	●	●	
	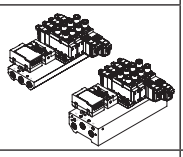			Serial transmission (-T6G1)				6.8 to 7.1 8.7 to 9.5 (*3)	100 to 140	24 DC	●	●	
	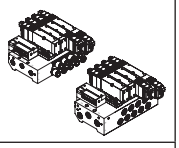	Base piping	Direct mount	Common terminal block (-T1*) D-sub-connector (-T30) Flat cable connector (-T5*)		M4GB4 (*2)		8.2 to 9.3	100 to 140	24 DC 12 DC	●	●	
	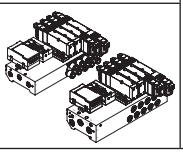			Serial transmission (-T6G1)				6.8 to 7.1 8.7 to 9.5 (*3)	100 to 140	24 DC	●	●	

*1: Effective cross-sectional area S and sonic conductance C are converted as S ≈ 5.0 x C.
*2: Two types of bases are available. Dimensions differ by bore size of the P/R1/R2 port.
*3: Values apply when the port size (ports A/B) is Rc1/2, G1/2, or NPT1/2.
*4: For DIN rail mount (D), select the supply and exhaust block (Q) as well.

	Switching position				A/B piping connection port												Electrical connections										Selection page
	3-position			Mix	Push-in fitting			Female thread																			
	All ports closed	ABR connection	PAB connection		ø8	ø10	ø12	Rc 1/4	Rc 3/8	Rc 1/2	G 1/4	G 3/8	G 1/2	NPT 1/4	NPT 3/8	NPT 1/2	Grommet lead	E-connector	EJ-connector	A-connector	DIN terminal box	Common terminal block	D-sub-connector	Flat cable with power supply terminal	Flat cable without power supply terminal	Serial transmission	
					C8	C10	C12	08	10	15	08G	10G	15G	08N	10N	15N	Blank	E□	E□J	A2N	B	T1□	T30	T50	T5□	T6G1	
	●	●	●		●	●	●		●			●			●		●	●	●		●						704
	●	●	●						●	●		●	●		●	●	●	●	●		●						716
	●	●	●	●	●	●	●		●			●			●		●	●	●		●						728
	●	●	●	●	●	●	●	●	●	●	●	●	●	●	●	●	●	●	●		●						742
	●	●	●	●	●	●	●	●	●		●	●		●	●		●	●	●		●						
	●	●	●	●	●	●	●		●			●			●					● Valve equipped		●	●	●	●		760
	●	●	●	●	●	●	●		●			●			●					● Valve equipped						●	770
	●	●	●	●	●	●	●	●	●	●	●	●	●	●	●	●				● Valve equipped		●	●	●	●		776
	●	●	●	●	●	●	●	●	●	●	●	●	●	●	●	●				● Valve equipped						●	788

Electrical connections

Discrete valve/individual wiring manifold

Blank Grommet lead wire Ⓐ

● **Lead wire length**
300 mm

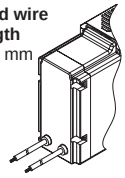

E0* E-connector Ⓐ

● **Lead wire length**
300 mm
500 mm
1000 mm
2000 mm
3000 mm

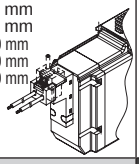

E0N E-connector without socket

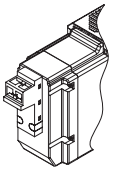

E1 E-connector with socket/ terminal

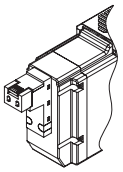

E2* E-connector ⒶⒷⒸ

● **Lead wire length**
300 mm
500 mm
1000 mm
2000 mm
3000 mm

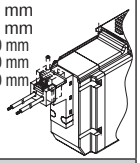

E2N E-connector without socket ⒷⒸ

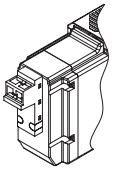

E3 E-connector with socket/ terminal ⒷⒸ

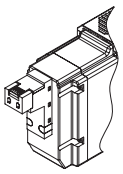

B DIN terminal box

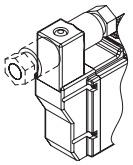

E0*J EJ-connector Ⓐ

● **Lead wire length**
1000 mm
2000 mm
3000 mm

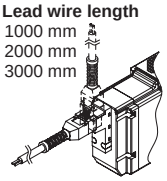

E2*J EJ-connector ⒶⒷⒸ

● **Lead wire length**
1000 mm
2000 mm
3000 mm

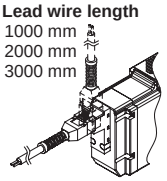

Reduced wiring manifold

T10 **T11** Common term. block (left side) M3 thread specs/push tighten specs

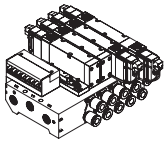

T10R **T11R** Common term. block (right-side) M3 thread specs/push tighten specs

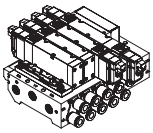

T30 D-sub-connector (left)

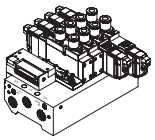

T30R D-sub-connector (right)

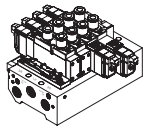

T50 Flat cable with power supply terminal (left side)

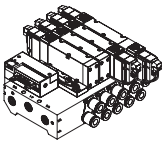

T50R Flat cable with power supply terminal (right side)

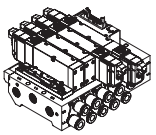

T51 **T52** **T53** Flat cable without power supply terminal (left side)

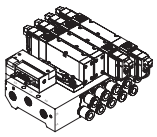

T51R **T52R** **T53R** Flat cable without power supply terminal (right side)

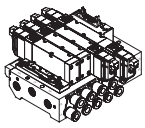

T6G1 Serial transmission type (16 points)

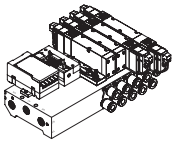

ⒶWith lead wire
ⒷWith indicator lamp
ⒸWith surge suppressor

Manual operating device

● **Non-locking**
Locking common type (standard)

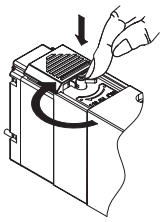

(1) For non-locking, Push to turn ON Release to turn OFF

(2) For locking, push and turn 90° clockwise to hold the ON state. Turn counterclockwise to release OFF

Other options

K External pilot

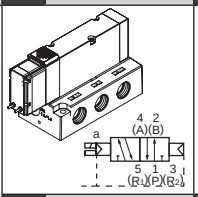

A Coolant proof

Select for coolant inflow and ozone measures.

F A/B port filter integrated

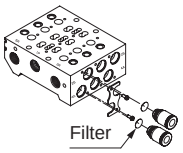

Z1 Air supply spacer

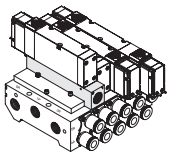

Z3 Exhaust spacer

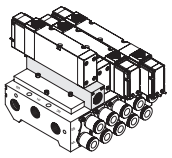

Q Supply and exhaust block

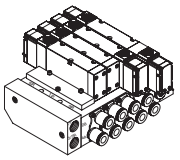

D DIN rail mount

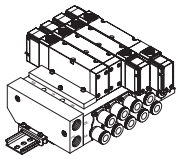

Electric connection circuit diagram

Electrical connections (wiring method) (None): Without lead wire (I): With lead wire (L): With indicator lamp (S): With surge suppressor (So): Without socket

Blank — Grommet lead wire (I)

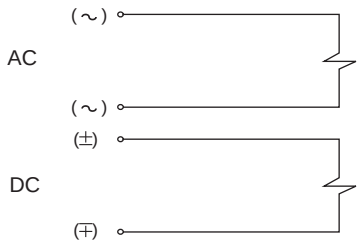

E0 / E0*J — E-connector/EJ-connector (I)

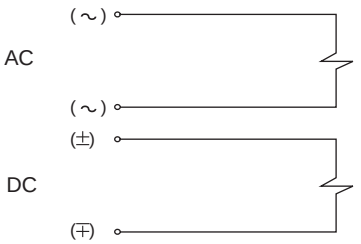

E0N — E-connector (R)

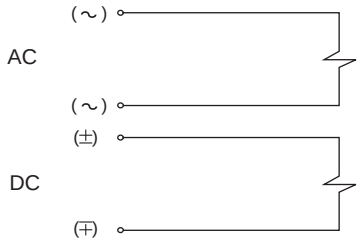

E1 — E-connector (None)

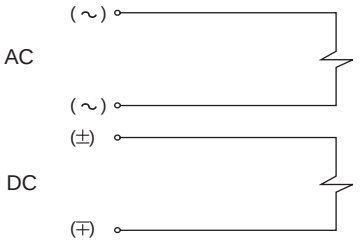

E2 / E2 * J — E-connector/EJ-connector (I)(L)(S)

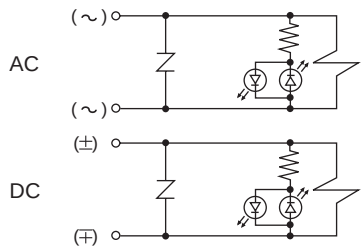

E2N — E-connector (L)(S)(So)

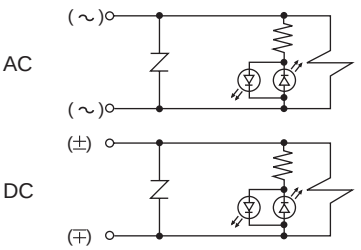

E3 — E-connector (None)(L)(S)

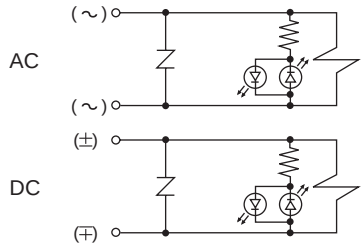

A2N — A-connector (L)(S)(So)

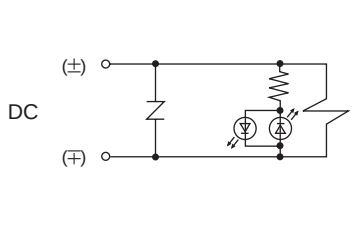

* Varistor is used as a surge suppressor.

B — DIN terminal box (I)(L)(S)

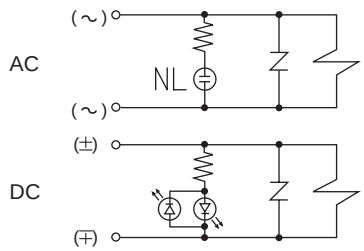

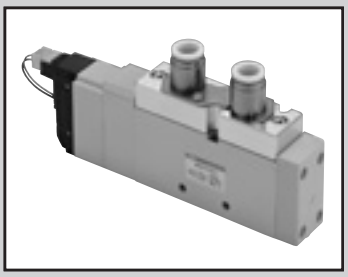

Single valve
Body piping

4GA4 Series

● Cylinder bore size: ø100 to ø140

Common specifications

Item	Description
Valve and operation	Pilot operated soft spool valve
Working fluid	Compressed air
Max. working pressure MPa	0.7 (≈100 psi, 7 bar)
Min. working pressure MPa	0.2 (≈29 psi, 2 bar)
Proof pressure MPa	1.05 (≈150 psi, 10.5 bar)
Ambient temperature °C	-5 (23°F) to 55 (131°F) (no freezing)
Fluid temperature °C	5 (41°F) to 55 (131°F)
Manual override	Non-locking/locking common
Lubrication (*1)	Not required
Degree of protection (*2)	Dust-proof [IP40 equivalent (DIN terminal box: IP65)]
Vibration resistance m/s^2	50 or less
Shock resistance m/s^2	300 or less
Atmosphere	Cannot be used in corrosive gas environments

*1: Use turbine oil Class 1 ISO VG32 for lubrication.
Excessive or intermittent lubrication results in unstable operation.
*2: Avoid water drops or oil, etc., during use.
IP65 (jet-proof) or equivalent applies for DIN terminal box specifications.
However, the specified outer diameter of the applicable cord and tightening torque must be used for fixing in place.

Electrical specifications

Item			Description
Rated voltage V	AC		100(50/60 Hz)
			110(50/60 Hz)
	DC		12, 24
Voltage fluctuation range			±10%
Starting current A	AC	100 V	0.056/0.044
		110 V	0.051/0.040
	DC	12 V	-
		24 V	-
Holding current A	AC	100 V	0.028/0.022
		110 V	0.025/0.020
	DC	12 V	0.079(0.083)
		24 V	0.040(0.042)
Power consumption (*3) W	AC	100 V	1.8/1.4
		110 V	(1.8/1.5)
	DC	12 V	0.95(1.0)
		24 V	
Thermal class			B
Surge suppressor			Option
Indicator			Lamp (option)

*3: Values in ( ) apply when lamp is included.

JIS symbol

● 5-port valve

2-position single

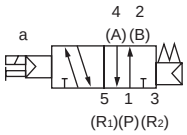

2-position double

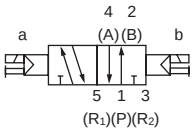

3-position all ports closed

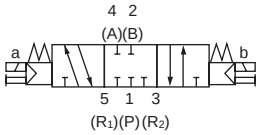

3-position A/B/R connection

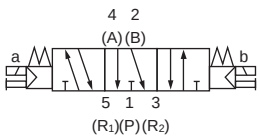

3-position P/A/B connection

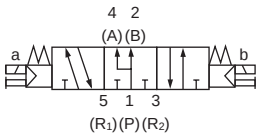

Individual specifications

Item		4GA4
Port size	A/B Port	Push-in fitting ø8, ø10, ø12
		Rc3/8, G3/8, NPT3/8
	P/R1/R2 port	Rc1/4, G1/4, NPT1/4

Performance/characteristics by model

Item			4GA4	
			ON	OFF
Response time ms	2-position	Single	40(40)	40(52)
		Double	40(52)	40(52)
	3-position	ABR connection	60(72)	60(72)

Values with lamp/surge suppressor are shown. The response times are the values with supply pressure of 0.5 MPa at 20°C and without lubrication. They depend on the pressure and the lubricant quality. Values in ( ) are for AC.

Weight

Item				4GA4
Weight g	2-position	Single	Grommet lead wire	310(319)
			E-connector	313(322)
			DIN terminal box	322(331)
		Double	Grommet lead wire	371(380)
			E-connector	377(386)
			DIN terminal box	395(404)
	3-position	All ports closed	Grommet lead wire	402(411)
			E-connector	408(417)
			DIN terminal box	426(435)

Values in ( ) include the mounting screw and gasket. Values for the E-connector include the socket assembly (with 300 mm lead wire).
For the EJ-connector, add 16 g/connector to the E-connector weight.

Flow characteristics

Model No.	Solenoid position		P→A/B		A/B→R1/R2	
			C[dm³/(s·bar)]	b	C[dm³/(s·bar)]	b
4GA4	2-position		8.1	0.40	8.0	0.31
	3-position	All ports closed	6.9	0.37	7.5	0.42
		ABR connection	6.8	0.40	8.7	0.37
		PAB connection	8.9	0.37	7.6	0.27

*1: Effective cross-sectional area S and sonic conductance C are converted as S ≈ 5.0 x C.

Coolant proof specifications

Can be selected with “How to order” Item Ⓔ option “A” on page 706.

Specifications for rechargeable battery (Catalog No. CC-1226A)

● For use in the rechargeable battery manufacturing process, materials used for air path and sliding section are limited

** - Voltage - **P4**

CE marking specifications

** - Voltage - **ST**

・ Standard voltage of 24 VDC or less is CE marking-compatible even if the model No. is not indicated with "ST".

How to order

4GA4 1 0 - 10 - E2 ( ) - 3

- Ⓐ Model No.
- Ⓑ Solenoid position
- Ⓒ Port size
- Ⓓ Electrical connections
  Refer to page 703 for the circuit diagram with surge suppressor/lamp.
- Ⓔ Option
- Ⓕ Voltage

Code	Description	Ⓐ Model No. 4GA4
Ⓑ Solenoid position		
1	2-position single	●
2	2-position double	●
3	3-position all ports closed	●
4	3-position ABR connection	●
5	3-position PAB connection	●

Ⓒ Port size		
Port	A/B Port	P/R Port Rc1/4
C8	ø8 push-in fitting	●
C10	ø10 push-in fitting	●
C12	ø12 push-in fitting	●
10	Rc3/8	●
10G	G3/8	● (*1)
10N	NPT3/8	● (*2)

Ⓓ Electrical connections		
Blank	Grommet lead wire	●
B	DIN terminal box (Pg7) with surge suppressor/lamp	●
E-connector (upward/lateral common)		
E0	Lead wire (300 mm)	●
E00	Lead wire (500 mm)	●
E01	Lead wire (1000 mm)	●
E02	Lead wire (2000 mm)	●
E03	Lead wire (3000 mm)	●
E2	Lead wire (300 mm) with surge suppressor/lamp	●
E20	Lead wire (500 mm) with surge suppressor/lamp	●
E21	Lead wire (1000 mm) with surge suppressor/lamp	●
E22	Lead wire (2000 mm) with surge suppressor/lamp	●
E23	Lead wire (3000 mm) with surge suppressor/lamp	●
E0N	Without lead wire (without socket)	●
E2N	Without lead wire (without socket) with surge suppressor/lamp	●
E3	No lead wire (with socket/terminal), surge suppressor/indicator lamp	●
E1	Without lead wire (socket/terminal attached)	●
EJ-connector (socket with cover, upward/lateral common)		
E01J	Lead wire (1000 mm)	●
E02J	Lead wire (2000 mm)	●
E03J	Lead wire (3000 mm)	●
E21J	Lead wire (1000 mm) with surge suppressor/lamp	●
E22J	Lead wire (2000 mm) with surge suppressor/lamp	●
E23J	Lead wire (3000 mm) with surge suppressor/lamp	●

Ⓔ Option		
Blank	None	●
A	Coolant proof	●
F	A/B port filter built in	●

Ⓕ Voltage		
1	100 VAC	●
3	24 VDC	●
4	12 VDC	●
5	110 VAC	●

JIS symbol

● 5-port valve

2-position single

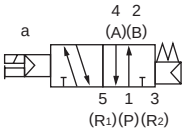

2-position double

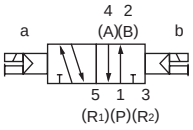

3-position all ports closed

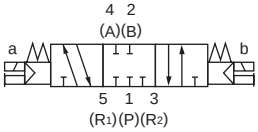

3-position A/B/R connection

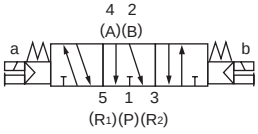

3-position P/A/B connection

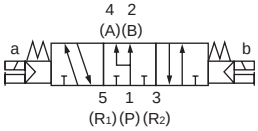

Precautions for model No. selection

*1: P/R-port is G1/4.
*2: P/R-port is NPT1/4.

Electrical connections

Discrete valve/individual wiring manifold

Blank Grommet lead wire

● **Lead wire length**
300 mm

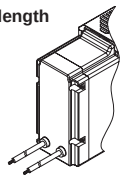

B DIN terminal box

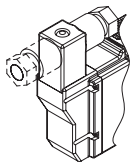

E0*
E2* E-connector

● **Lead wire length**
300 mm
500 mm
1000 mm
2000 mm
3000 mm

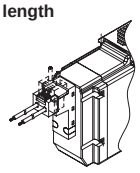

E0*J
E2*J EJ-connector

● **Lead wire length**
1000 mm
2000 mm
3000 mm

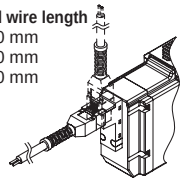

E0N
E2N E-connector without socket

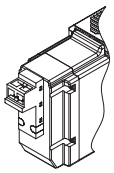

E1
E3 E-connector with socket/terminal

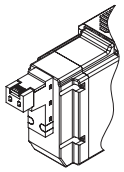

Internal structure and parts list

4GA410

● 2-position single
Grommet lead wire (blank)

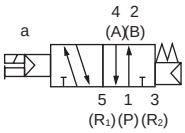

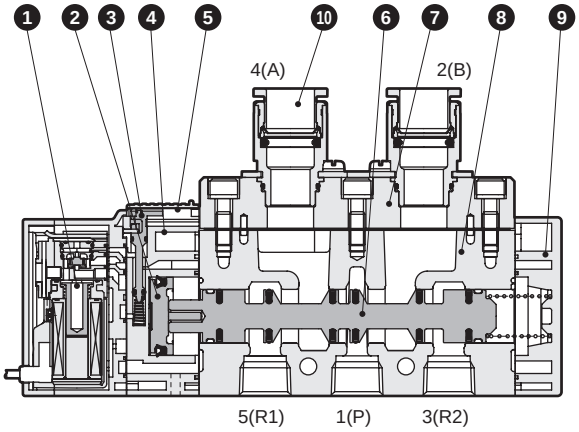

4GA420

● 2-position double
Grommet lead wire (blank)

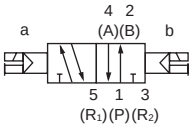

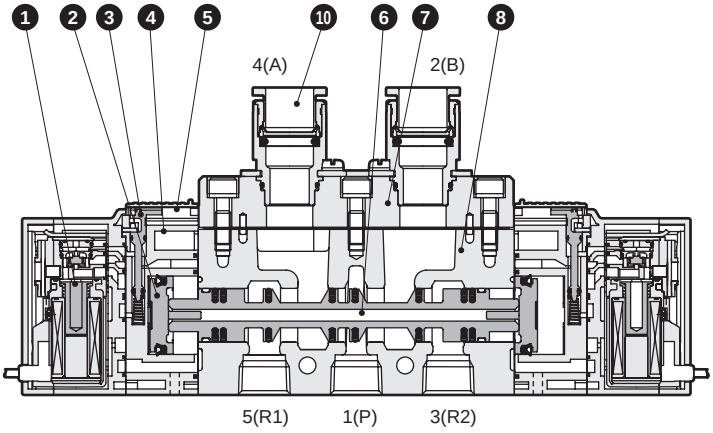

4GA4 $^{3}_{4}_{5}$ 0

● 3-position
Grommet lead wire (blank)

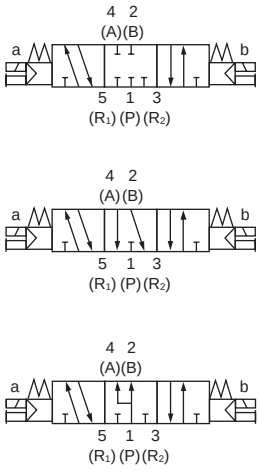

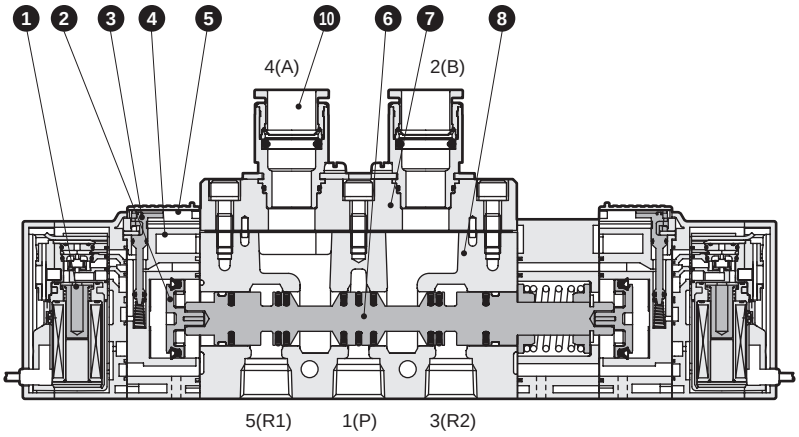

Main parts list

No.	Part name	Material
1	Coil assembly	-
2	Piston assembly	-
3	Manual override	-
4	Piston chamber	PBT
5	Manual protection cover	PBT
6	Spool assembly	-
7	Fitting adaptor	Aluminum
8	Body	Aluminum
9	Cap	PA
10	Cartridge push-in fitting	-

Parts list

No.	Part name		Model No.
-	Cartridge push-in fitting and related parts	ø8 straight	4G4-JOINT-C8
		ø10 straight	4G4-JOINT-C10
		ø12 straight	4G4-JOINT-C12

Internal structure and parts list/dimensions (electrical connections section)

● E-connector E □□

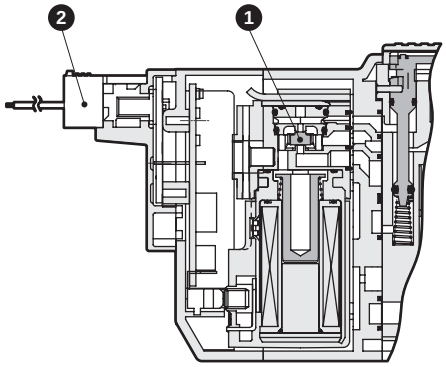

● EJ-connector E □□J

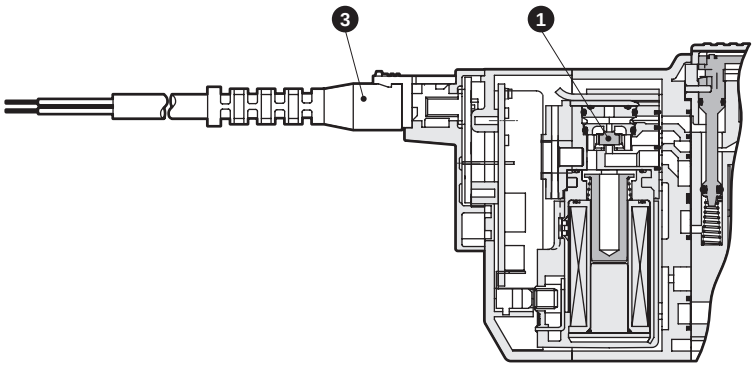

● DIN terminal box B

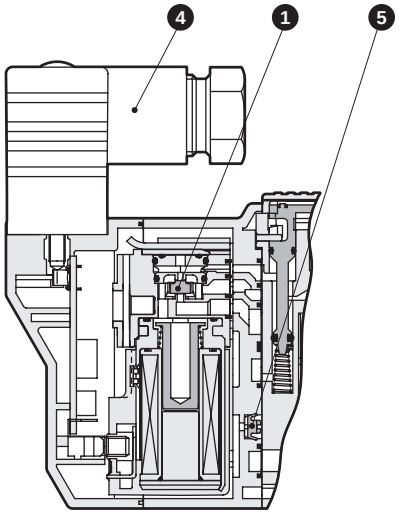

Main parts list

No.	Part name	Material	No.	Part name	Material
1	Coil assembly	-	4	DIN terminal box assembly	-
2	E-connector socket assembly	-	5	Check valve	NBR
3	Socket assembly with cover	-			

Dimensions

4GA410

● 2-position single Grommet lead wire (blank)

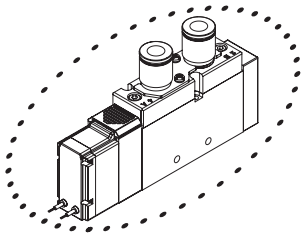

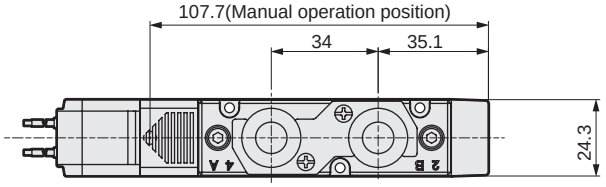

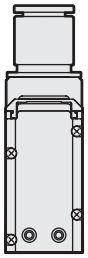

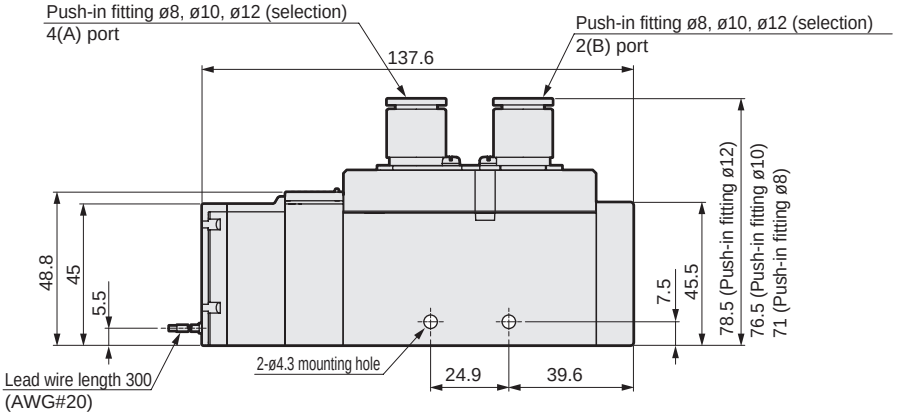

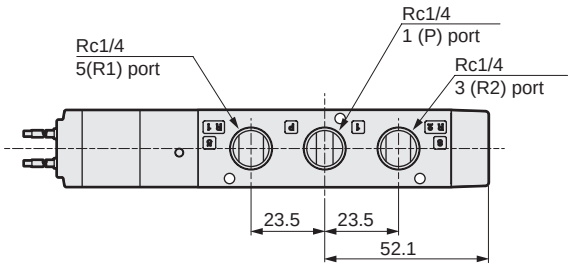

● Rc3/8 female thread (10)

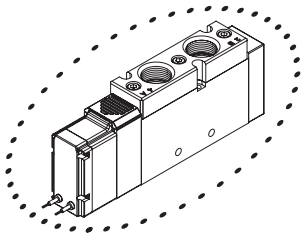

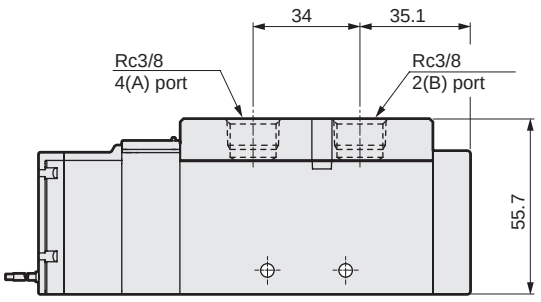

Dimensions

● E-connector (E)

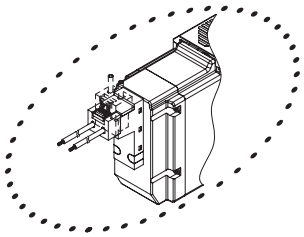

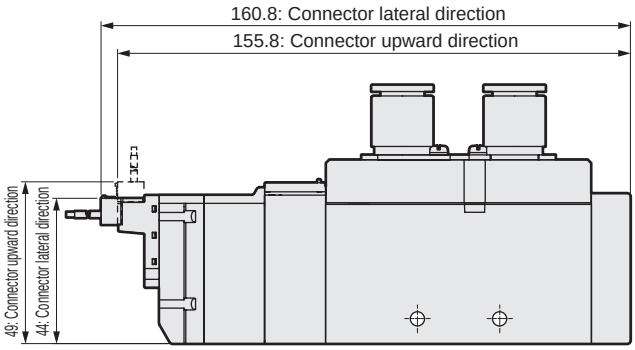

● EJ-connector (E**J)

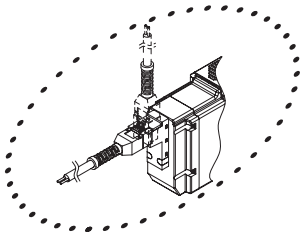

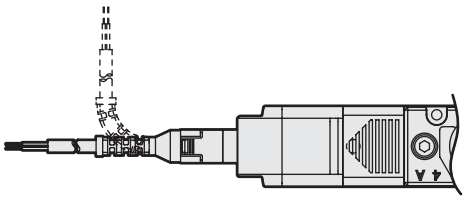

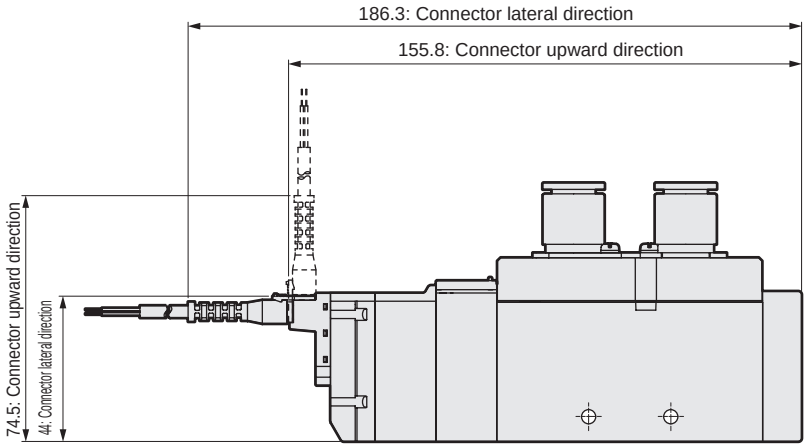

● DIN terminal box (B)

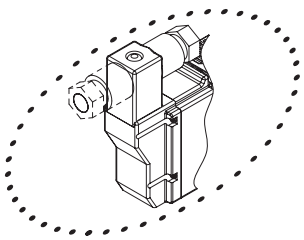

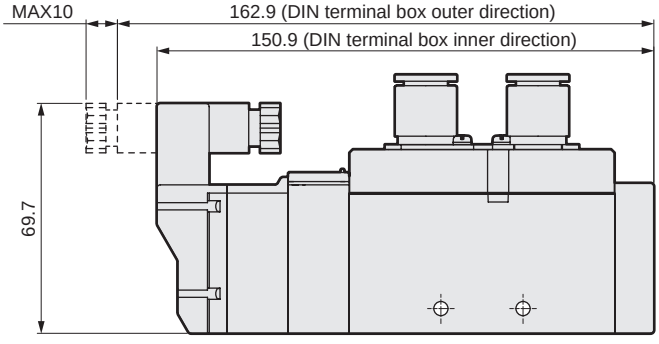

Note: DIN terminal box assembly is shipped facing inward.

Dimensions

4GA420

● 2-position double Grommet lead wire (blank)

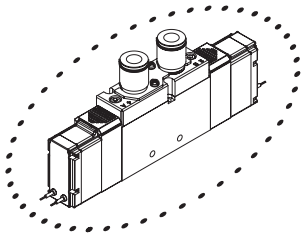

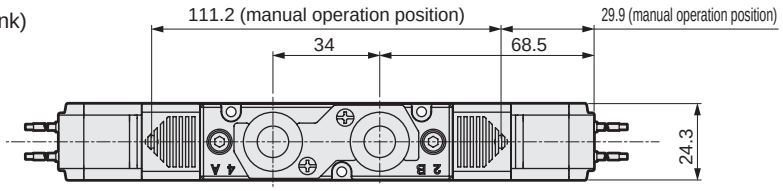

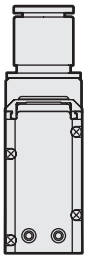

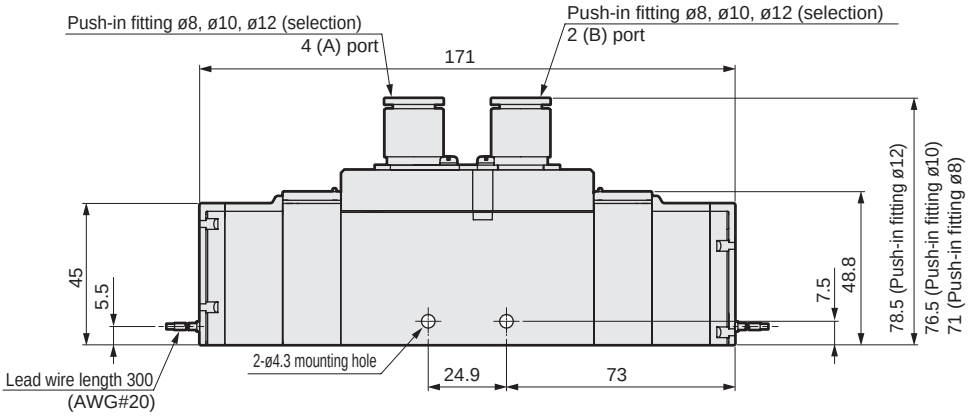

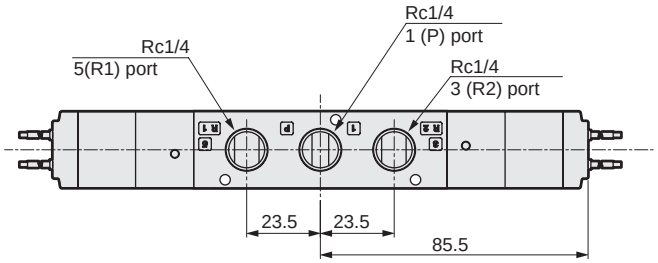

● Rc3/8 female thread (10)

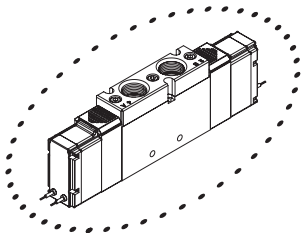

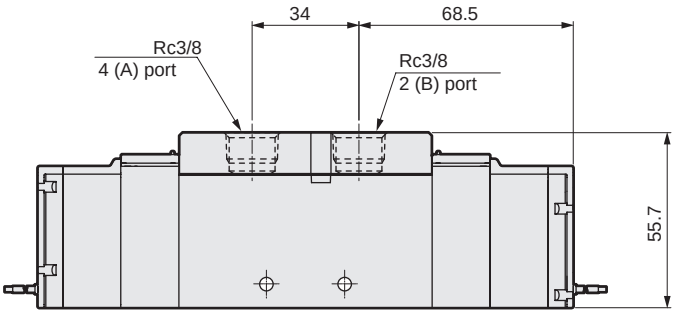

Dimensions

● E-connector (E)

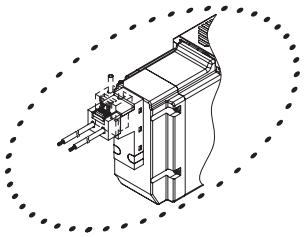

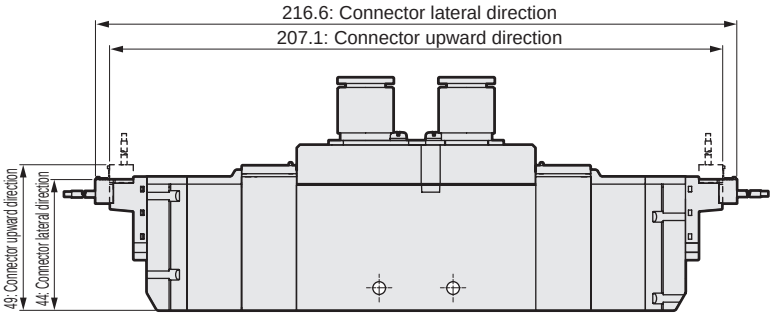

● EJ-connector (E**J)

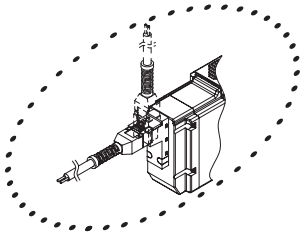

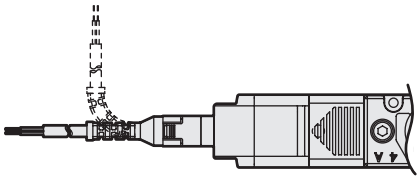

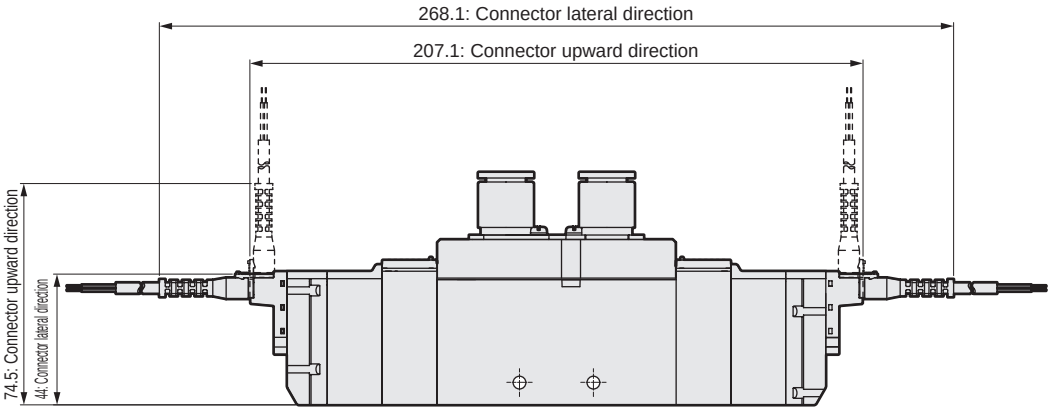

● DIN terminal box (B)

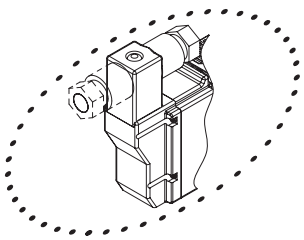

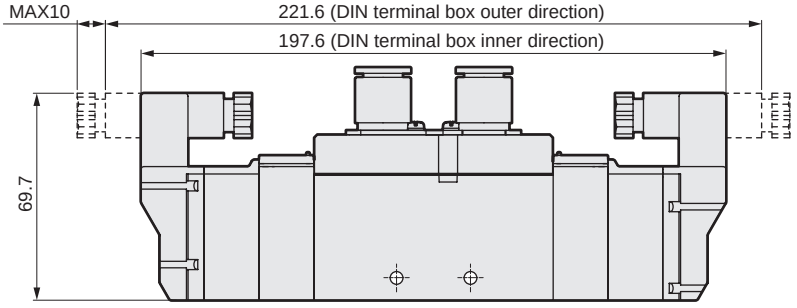

Note: DIN terminal box assembly is shipped facing inward.

Dimensions

4GA4$^{3}_{4}_{5}$0

● 3-position grommet lead wire (blank)

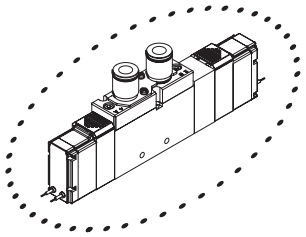

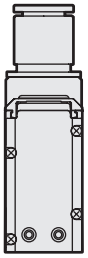

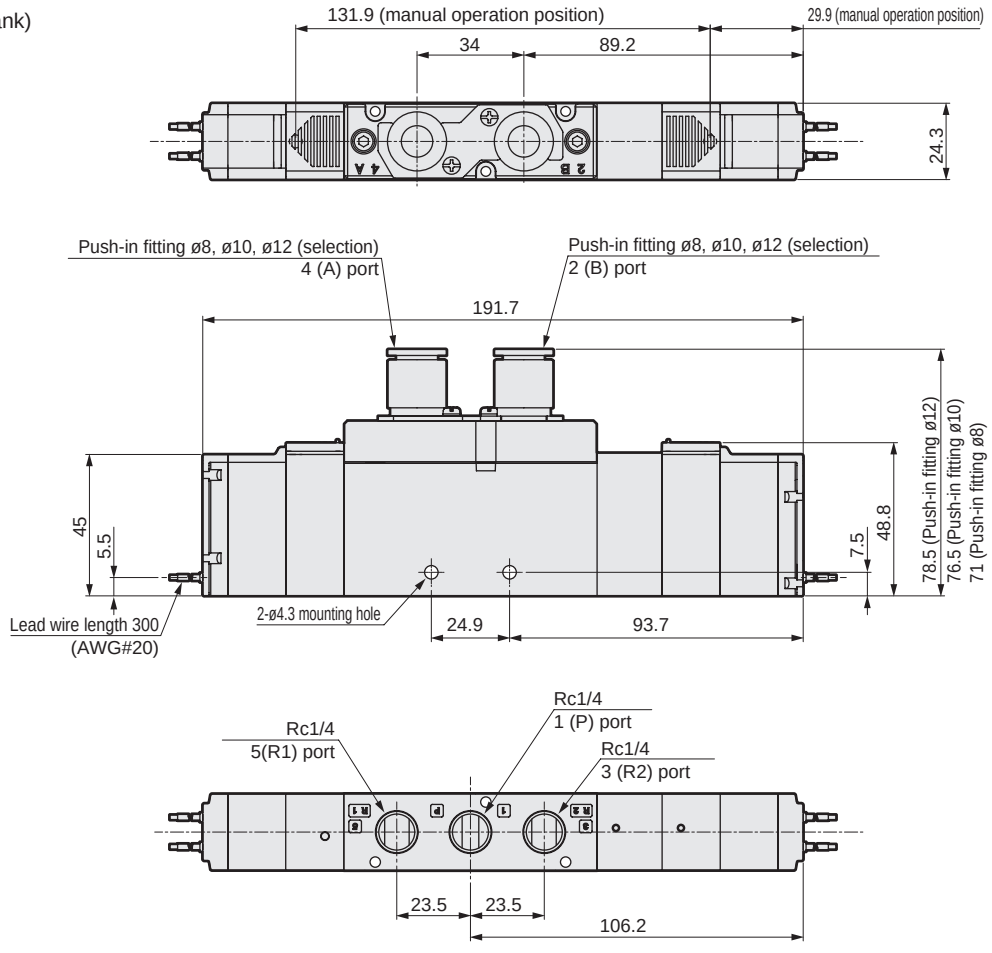

● Rc3/8 female thread (10)

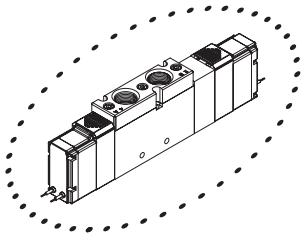

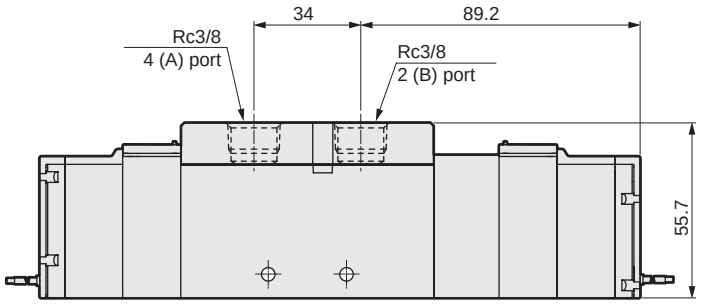

Dimensions

● E-connector (E)

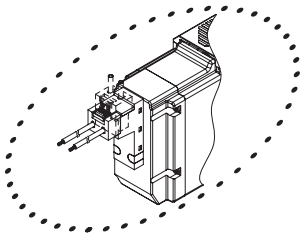

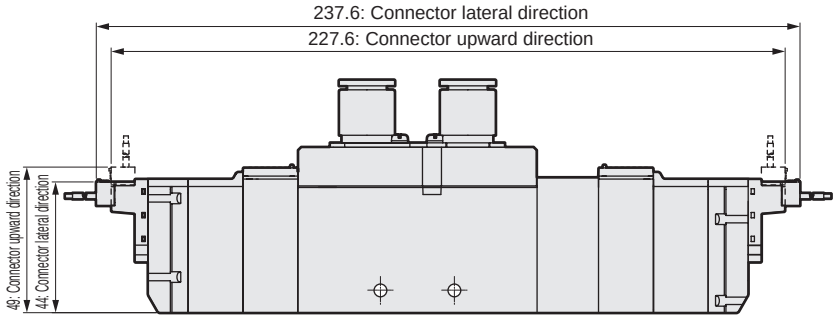

● EJ-connector (E**J)

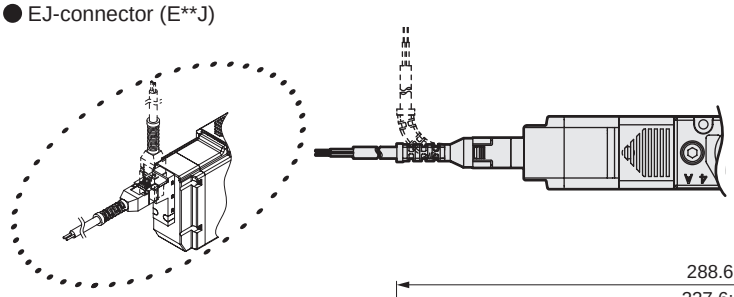

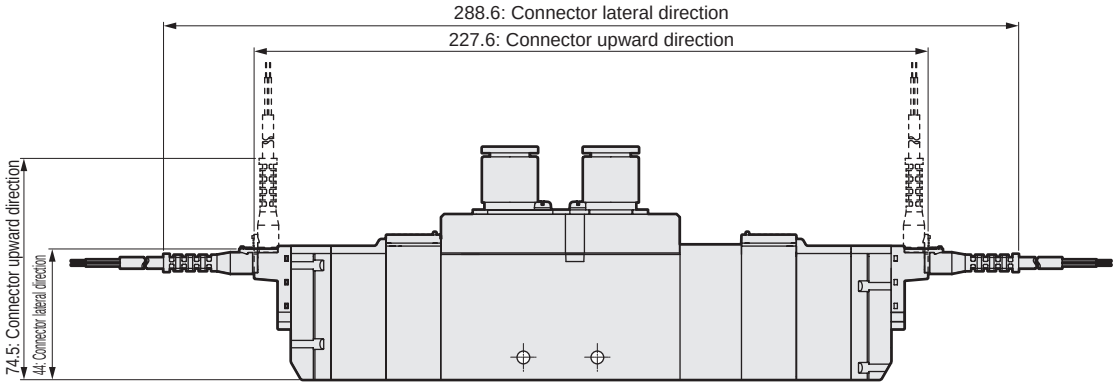

● DIN terminal box (B)

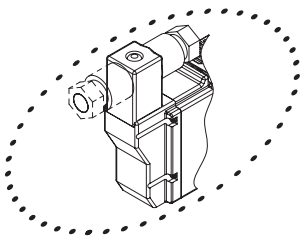

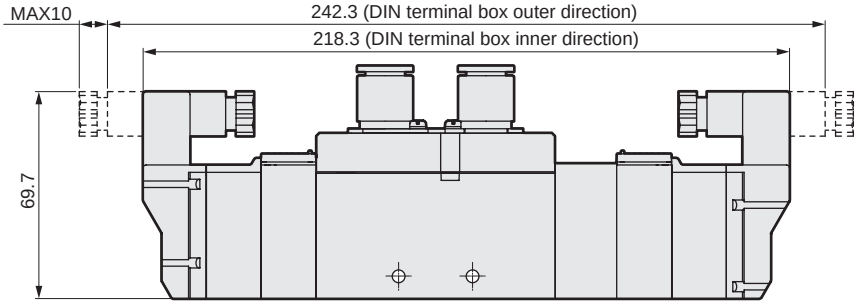

Note: DIN terminal box assembly is shipped facing inward.

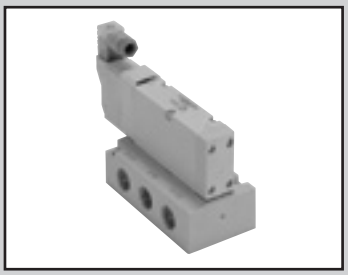

Discrete valve
Base piping

4GB4 Series

● Cylinder bore size: ø125 to ø160

CE RoHS CAD

Common specifications

Item		Description
Valve and operation		Pilot operated soft spool valve
Working fluid		Compressed air
Max. working pressure MPa		0.7 (≈100 psi, 7 bar)
Min. working pressure MPa		0.2 (≈29 psi, 2 bar) (*3)
Proof pressure MPa		1.05 (≈150 psi, 10.5 bar)
Ambient temperature °C		-5 (23°F) to 55 (131°F) (no freezing)
Fluid temperature °C		5 (41°F) to 55 (131°F)
Manual override		Non-locking/locking common
Pilot exhaust method	Internal pilot	Main valve/pilot valve common exhaust
	External pilot	Main valve/pilot valve individual exhaust
Lubrication (*1)		Not required
Degree of protection (*2)		Dust-proof [IP40 equivalent (DIN terminal box: IP65)]
Vibration resistance m/s^2		50 or less
Shock resistance m/s^2		300 or less
Atmosphere		Cannot be used in corrosive gas environments

*1: Use turbine oil Class 1 ISO VG32 for lubrication.
Excessive or intermittent lubrication results in unstable operation.
*2: Avoid water drops or oil, etc., during use.
IP65 (jet-proof) or equivalent applies for DIN terminal box specifications. However, the specified outer diameter of the applicable cord and tightening torque must be used for fixing in place.
*3: The working pressure range is 0 to 0.7 MPa when the external pilot (option code: K) is selected. Set the external pilot pressure between 0.2 and 0.7 MPa.

Electrical specifications

Item			Description
Rated voltage V	AC		100(50/60 Hz) 110(50/60 Hz)
	DC		12, 24
Voltage fluctuation range			±10%
Starting current A	AC	100 V	0.056/0.044
		110 V	0.051/0.040
	DC	12 V	-
		24 V	-
Holding current A	AC	100 V	0.028/0.022
		110 V	0.025/0.020
	DC	12 V	0.079(0.083)
		24 V	0.040(0.042)
Power consumption W (*4)	AC	100 V	1.8/1.4 (1.8/1.5)
		110 V	
	DC	12 V	0.95(1.0)
		24 V	
Thermal class			B
Surge suppressor			Option
Indicator			Lamp (option)

*4: Values in ( ) apply when lamp is included.

JIS symbol

● 5-port valve

2-position single

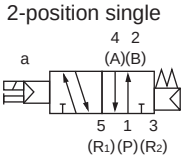

2-position double

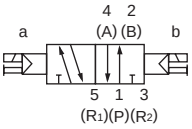

3-position all ports closed

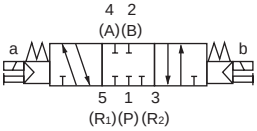

3-position A/B/R connection

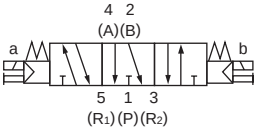

3-position P/A/B connection

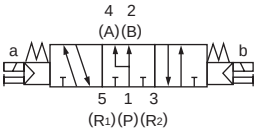

Individual specifications

Item		4GB4
Port size	A/B port	Rc3/8, Rc1/2, G3/8, G1/2, NPT3/8, NPT1/2
	P/R1/R2 port	Rc3/8, Rc1/2, G3/8, G1/2, NPT3/8, NPT1/2

Performance/characteristics by model

Item			4GB4	
			ON	OFF
Response time ms	2-position	Single	40(40)	40(52)
		Double	40(52)	40(52)
	3-position	ABR connection	60(72)	60(72)

Values with lamp/surge suppressor are shown. The response times are the values with supply pressure of 0.5 MPa at 20°C and without lubrication. They depend on the pressure and the lubricant quality. Values in ( ) are for AC.

Weight

Item				4GB4
Weight g	2-position	Single	Grommet lead wire	563(256)
			E-connector	566(259)
			DIN terminal box	575(268)
		Double	Grommet lead wire	620(313)
			E-connector	626(319)
			DIN terminal box	644(337)
	3-position	All ports Block	Grommet lead wire	655(348)
			E-connector	661(354)
			DIN terminal box	679(372)

Values in ( ) do not include the single sub-plate. Values for the E-connector include the socket assembly (with 300 mm lead wire).
For the EJ type connector, add 16 g/connector to the E-connector weight.

Flow characteristics

Model No.	Solenoid position		P→A/B		A/B→R1/R2	
			C[dm³/(s·bar)]	b	C[dm³/(s·bar)]	b
4GB4	2-position		11	0.19	13	0.19
	3-position	All ports closed	9.1	0.11	12	0.27
		ABR connection	9.2	0.11	15	0.22
		PAB connection	10	0.06	12	0.24

*1: Effective cross-sectional area S and sonic conductance C are converted as S ≈ 5.0 × C.

Coolant proof specifications

Can be selected with “How to order” Item Ⓔ option “A” on page 718.

Specifications for rechargeable battery

(Catalog No. CC-1226A)

● For use in the rechargeable battery manufacturing process, materials used for air path and sliding section are limited

** - Voltage - **P4**

CE marking specifications

** - Voltage - **ST**

・ Standard voltage of 24 VDC or less is CE marking-compatible even if the model No. is not indicated with "ST".

How to order

4GB4 1 0 - 10 - E2 ( ) - 3

- Ⓐ Model No.
- Ⓑ Solenoid position
- Ⓒ Port size
- Ⓓ Electrical connections
  Refer to page 703 for the circuit diagram with surge suppressor/lamp.
- Ⓔ Option
- Ⓕ Voltage

Code	Description	Ⓐ Model No. 4GB4
Ⓑ Solenoid position		
1	2-position single	●
2	2-position double	●
3	3-position all ports closed	●
4	3-position ABR connection	●
5	3-position PAB connection	●

Ⓒ Port size			
Port	A/B Port	P/R Port	
		Rc3/8	Rc1/2
10	Rc3/8	●	
15	Rc1/2		●
10G	G3/8	● (*1)	
15G	G1/2		● (*1)
10N	NPT3/8	● (*2)	
15N	NPT1/2		● (*2)

Ⓓ Electrical connections		
Blank	Grommet lead wire	●
B	DIN terminal box (Pg7) with surge suppressor/lamp	●
E-connector (upward/lateral common)		
E0	Lead wire (300 mm)	●
E00	Lead wire (500 mm)	●
E01	Lead wire (1000 mm)	●
E02	Lead wire (2000 mm)	●
E03	Lead wire (3000 mm)	●
E2	Lead wire (300 mm) with surge suppressor/lamp	●
E20	Lead wire (500 mm) with surge suppressor/lamp	●
E21	Lead wire (1000 mm) with surge suppressor/lamp	●
E22	Lead wire (2000 mm) with surge suppressor/lamp	●
E23	Lead wire (3000 mm) with surge suppressor/lamp	●
E0N	Without lead wire (without socket)	●
E2N	Without lead wire (without socket) with surge suppressor/lamp	●
E3	No lead wire (with socket/terminal), surge suppressor/indicator lamp	●
E1	Without lead wire (socket/terminal attached)	●
EJ type connector (socket with cover, upward/lateral common)		
E01J	Lead wire (1000 mm)	●
E02J	Lead wire (2000 mm)	●
E03J	Lead wire (3000 mm)	●
E21J	Lead wire (1000 mm) with surge suppressor/lamp	●
E22J	Lead wire (2000 mm) with surge suppressor/lamp	●
E23J	Lead wire (3000 mm) with surge suppressor/lamp	●

Ⓔ Option		
Blank	None	●
K	External pilot	●
A	Coolant proof	●
F	A/B port filter built in	●

Ⓕ Voltage		
1	100 VAC	●
3	24 VDC	●
4	12 VDC	●
5	110 VAC	●

JIS symbol

● 5-port valve

2-position single

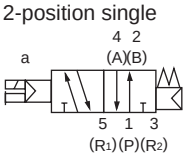

2-position double

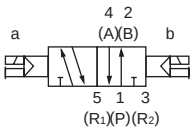

3-position all ports closed

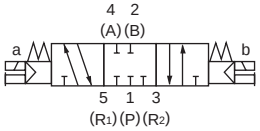

3-position A/B/R connection

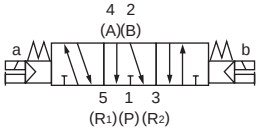

3-position P/A/B connection

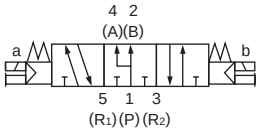

⚠ Precautions for model No. selection

*1: P/R port is G thread.
*2: P/R port is NPT thread.

Electrical connections

Discrete valve/individual wiring manifold

Blank Grommet lead wire

● **Lead wire length**
300 mm

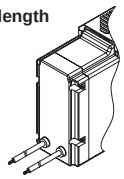

B DIN terminal box

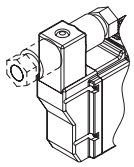

E0*
E2* E-connector

● **Lead wire length**
300 mm
500 mm
1000 mm
2000 mm
3000 mm

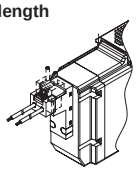

E0*J
E2*J EJ type connector

● **Lead wire length**
1000 mm
2000 mm
3000 mm

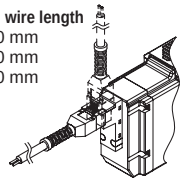

E0N
E2N E-connector without socket

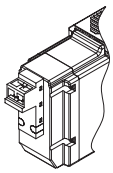

E1
E3 E-connector with socket/terminal

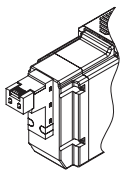

Internal structure and parts list

4GB410

● 2-position single
Grommet lead wire (blank)

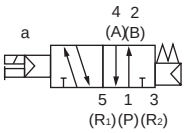

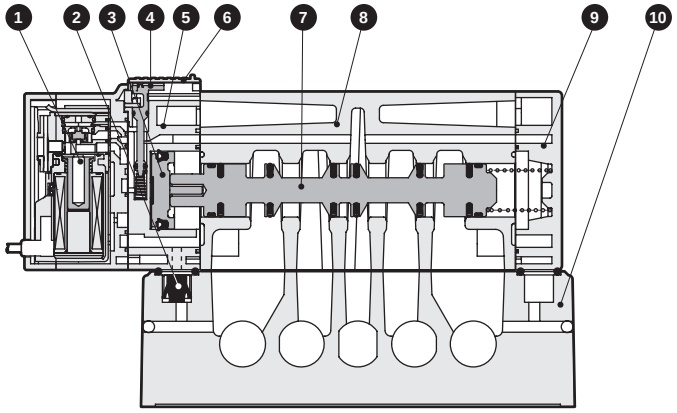

4GB420

● 2-position double
Grommet lead wire (blank)

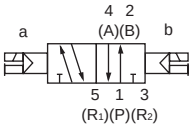

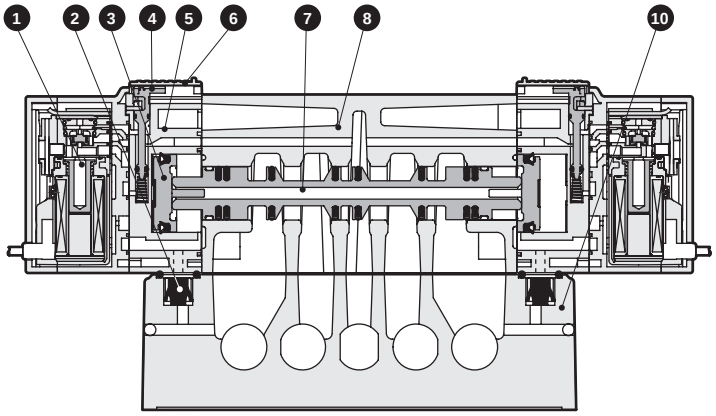

4GB4$^{3}_{4}_{5}$0

● 3-position
Grommet lead wire (blank)

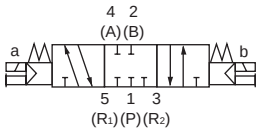

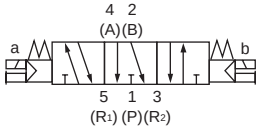

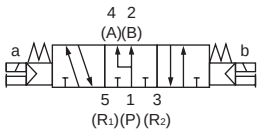

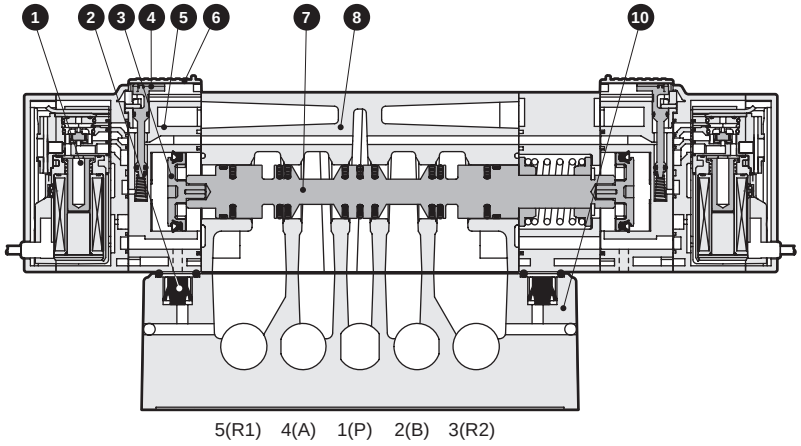

Main parts list

No.	Part name	Material	No.	Part name	Material
1	Coil assembly	-	6	Manual protection cover	PBT
2	Check valve	H-NBR	7	Spool assembly	-
3	Piston assembly	-	8	Body	Aluminum
4	Manual override	-	9	Cap	PA
5	Piston chamber	PBT	10	Discrete sub-plate	Aluminum

Internal structure and parts list/dimensions (electrical connections)

● E-connector E □□

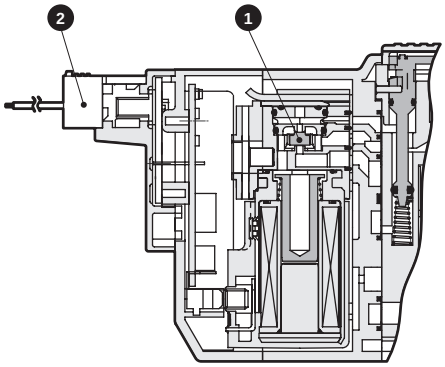

● EJ type connector E □□ J

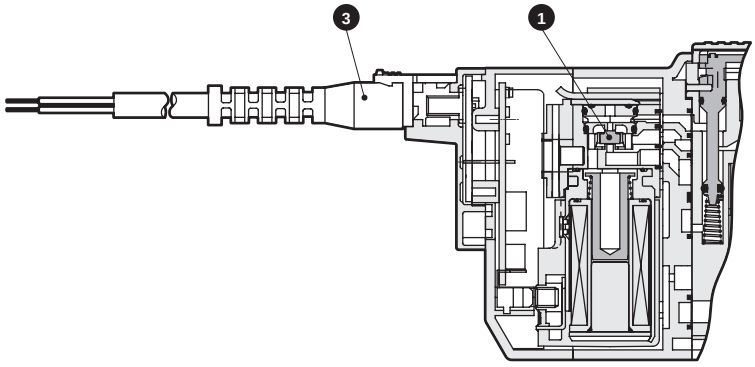

● DIN terminal box B

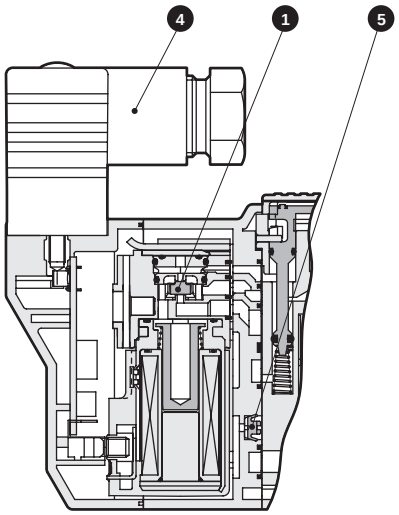

Main parts list

No.	Part name	Material	No.	Part name	Material
1	Coil assembly	-	4	DIN terminal box assembly	-
2	E-connector socket assembly	-	5	Check valve	NBR
3	Socket assembly with cover	-			

Dimensions

4GB410

● 2-position single grommet lead wire (blank)

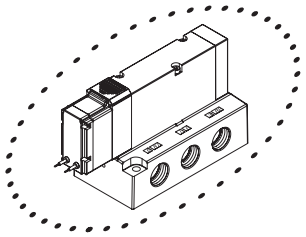

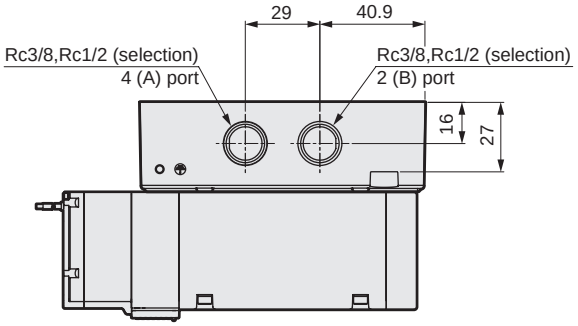

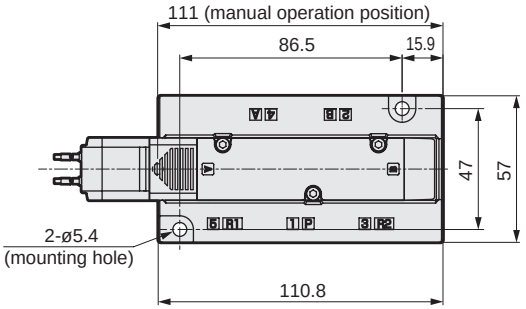

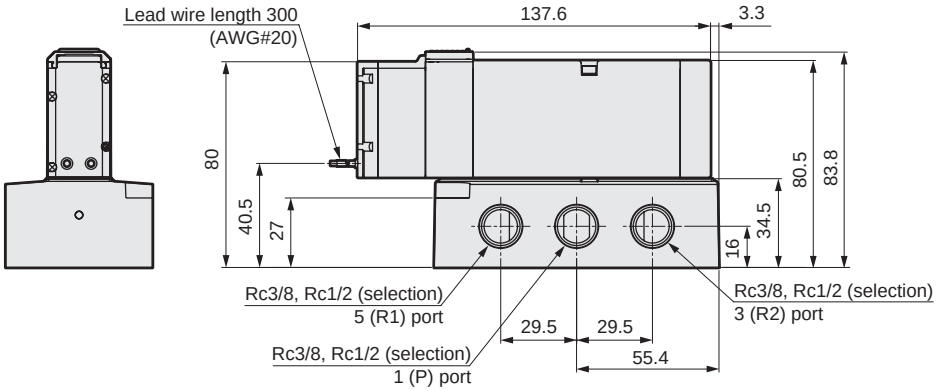

● External pilot (K)

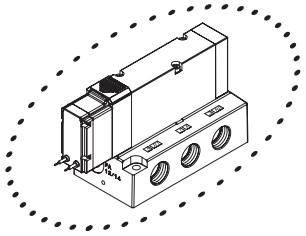

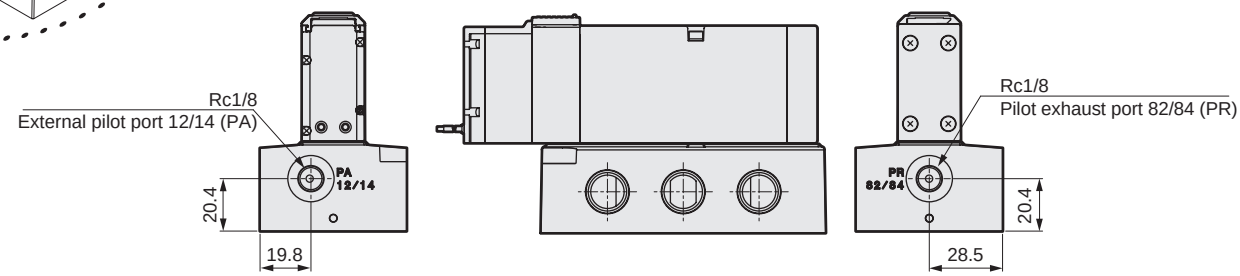

Dimensions

● E-connector (E)

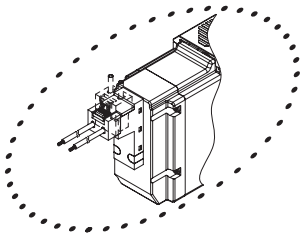

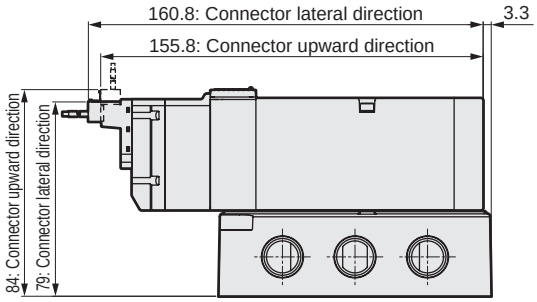

● EJ type connector (E**J)

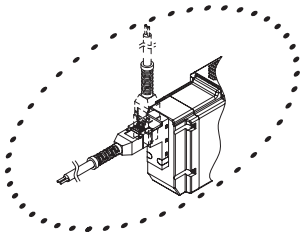

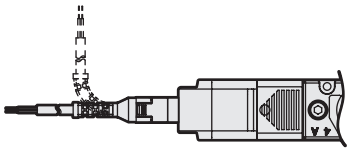

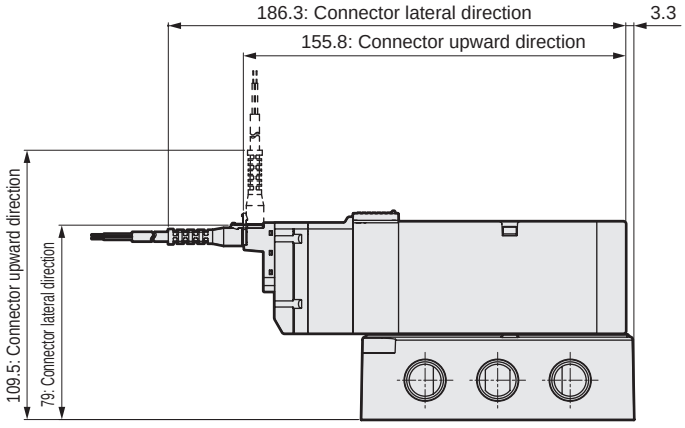

● DIN terminal box (B)

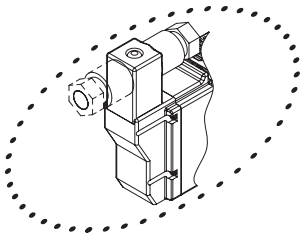

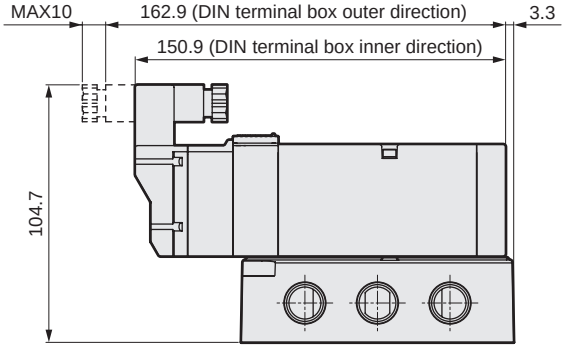

Note: DIN terminal box assembly is shipped facing inward.

Dimensions

4GB420

● 2-position double grommet lead wire (blank)

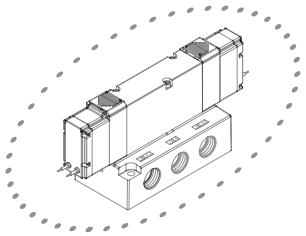

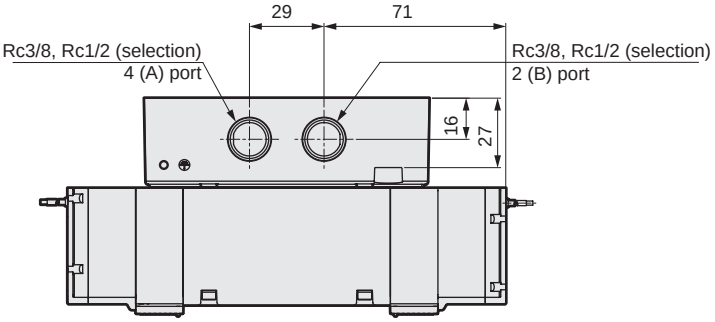

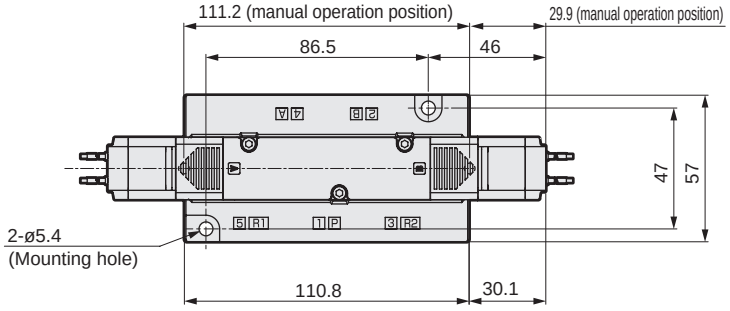

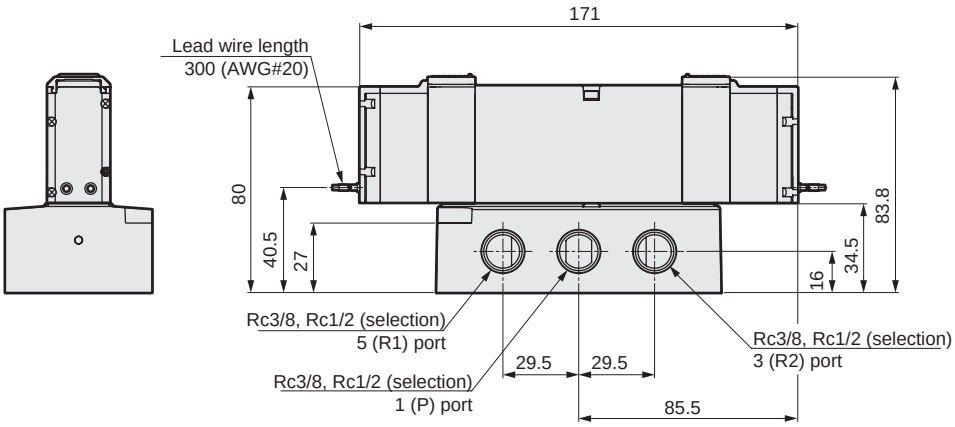

● External pilot (K)

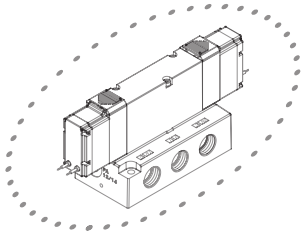

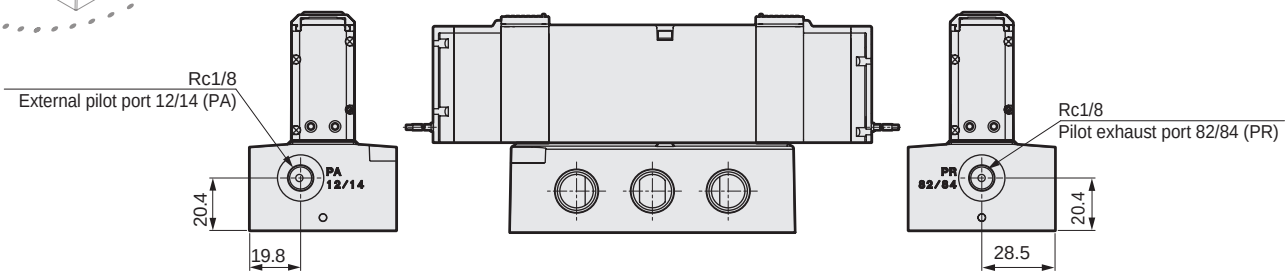

Dimensions

● E-connector (E)

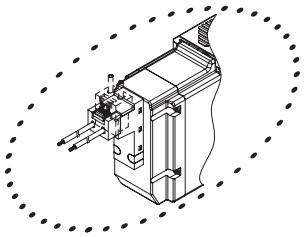

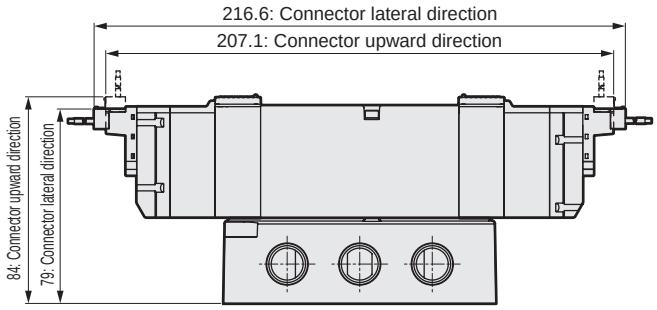

● EJ type connector (E**J)

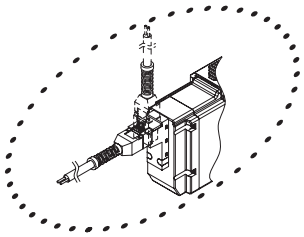

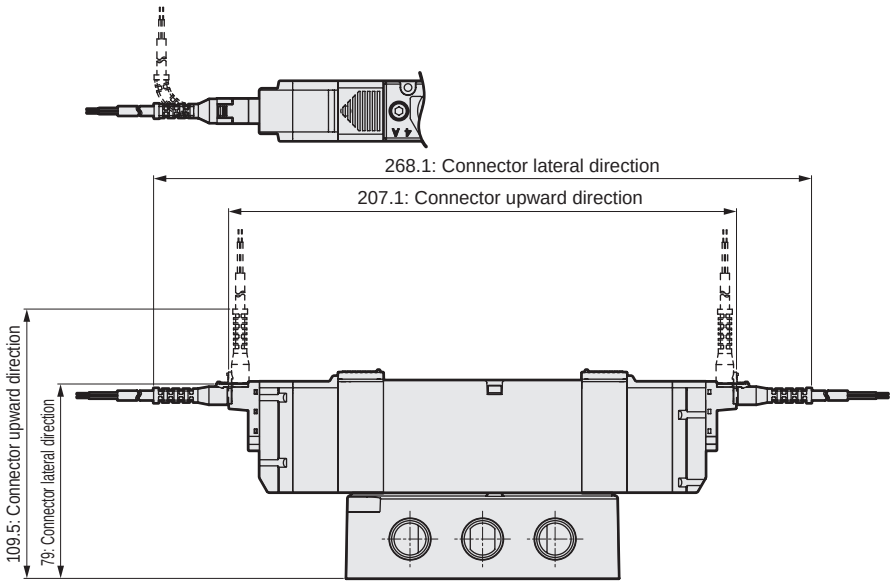

● DIN terminal box (B)

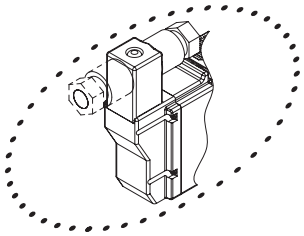

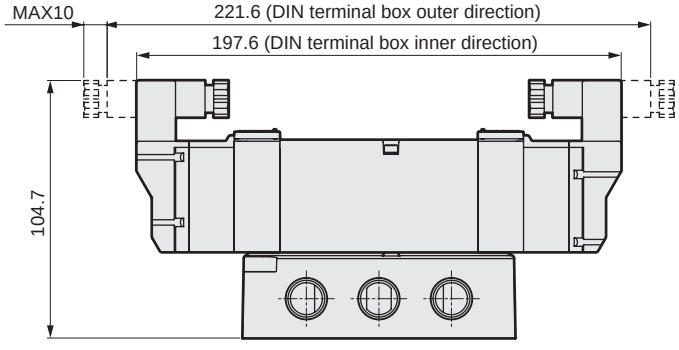

Note: DIN terminal box assembly is shipped facing inward.

Dimensions

4GB4 3 4 5 0

● 3-position grommet lead wire (blank)

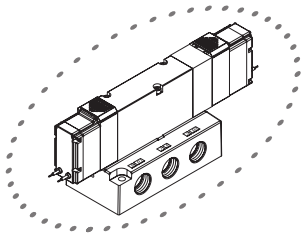

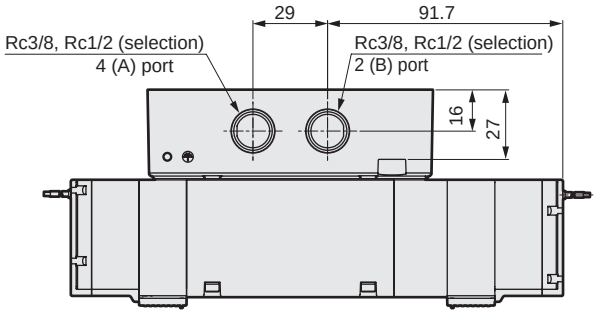

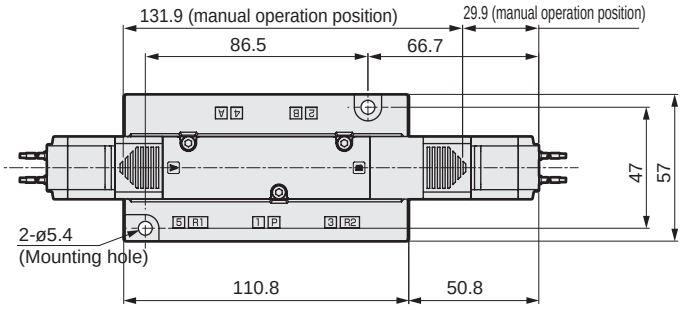

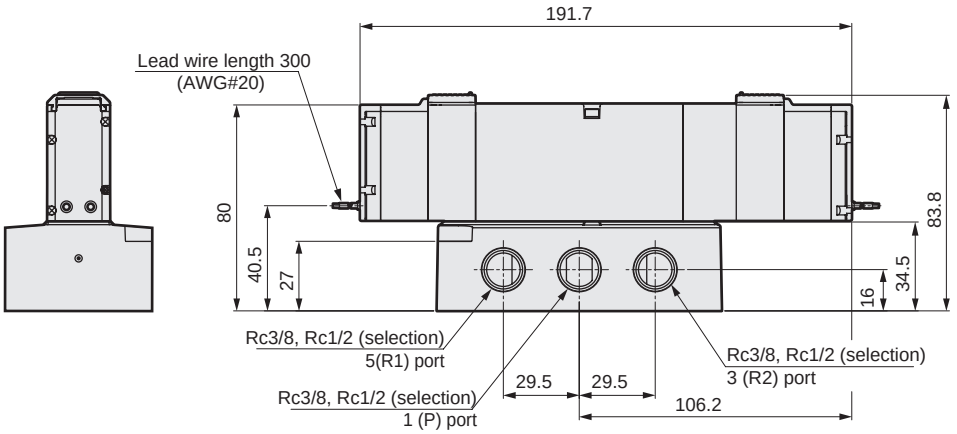

● External pilot (K)

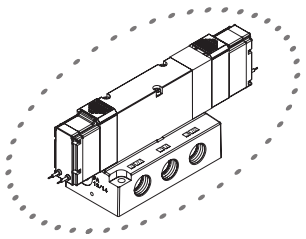

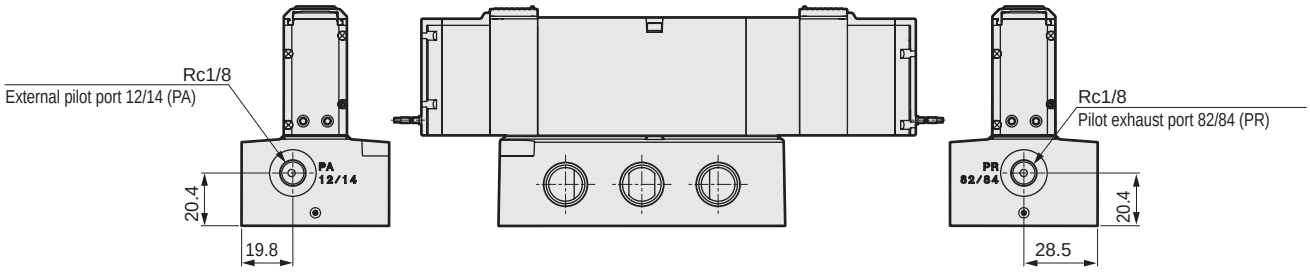

Dimensions

● E-connector (E)

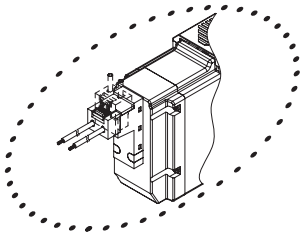

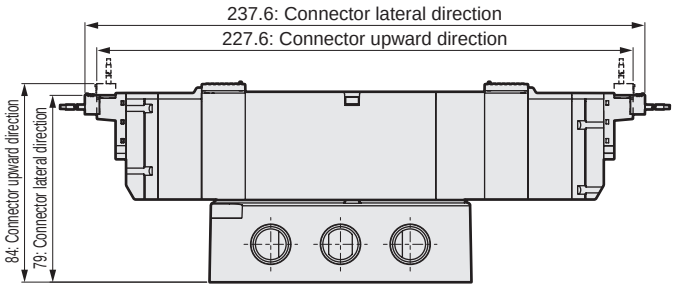

● EJ type connector (E**J)

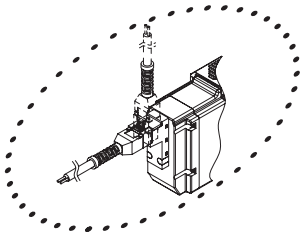

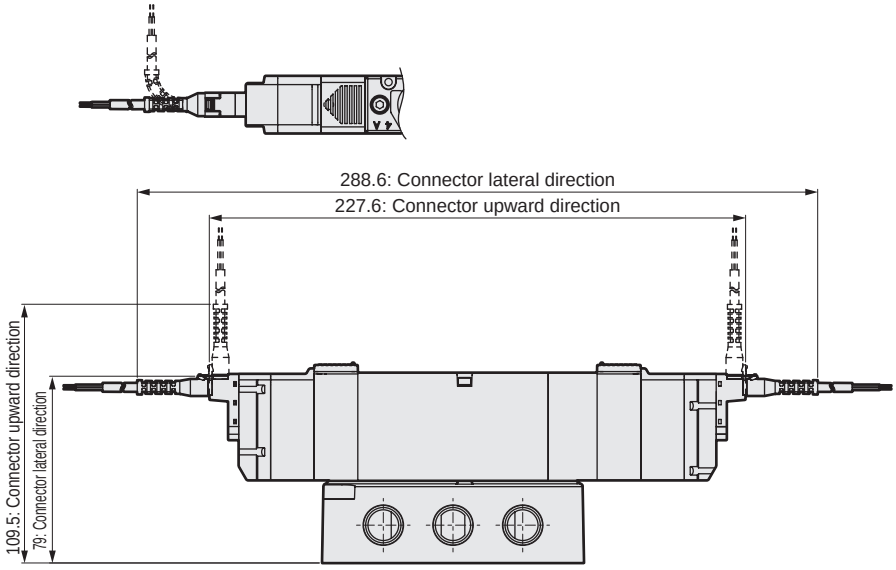

● DIN terminal box (B)

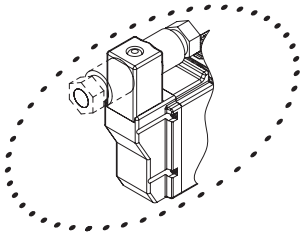

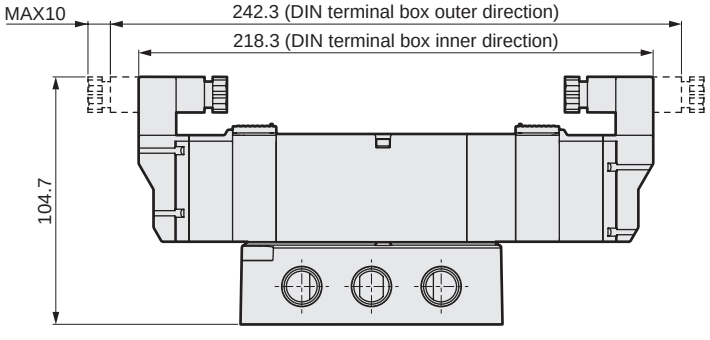

Note: DIN terminal box assembly is shipped facing inward.

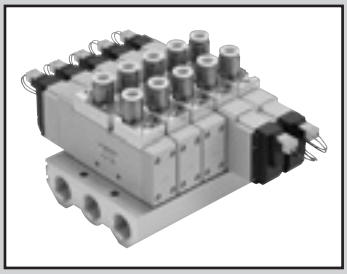

Individual wiring manifold
Body piping
Direct mount

M4GA4 Series

● Cylinder bore size: ø100 to ø140

Manifold common specifications

Item		Description
Manifold		Integrated base
Mounting method		Direct mount
Supply and exhaust method		Common supply/common exhaust
Pilot exhaust method	Internal pilot	Main valve/pilot valve common exhaust (Pilot exhaust check valve built-in)
	External pilot	Main valve/pilot valve individual exhaust
Piping direction		Valve top direction
Valve and operation		Pilot operated soft spool valve
Working fluid		Compressed air
Max. working pressure MPa		0.7 (≈100 psi, 7 bar)
Min. working pressure MPa		0.2 (≈29 psi, 2 bar) (*3)
Proof pressure MPa		1.05 (≈150 psi, 10.5 bar)
Ambient temperature °C		-5 (23°F) to 55 (131°F) (no freezing)
Fluid temperature °C		5 (41°F) to 55 (131°F)
Manual override		Non-locking/locking common
Lubrication (*1)		Not required
Degree of protection (*2)		Dust-proof [IP40 equivalent (DIN terminal box: IP65)]
Vibration resistance m/s^2		50 or less
Shock resistance m/s^2		300 or less
Atmosphere		Cannot be used in corrosive gas environments

*1: Use turbine oil Class 1 ISO VG32 for lubrication. Excessive or intermittent lubrication results in unstable operation.
*2: Avoid water drops or oil, etc., during use.
IP65 (jet-proof) or equivalent applies for DIN terminal box specifications. However, the specified outer diameter of the applicable cord and tightening torque must be used for fixing in place.
*3: The working pressure range is 0 to 0.7 MPa when the external pilot (option code: K) is selected. Set the external pilot pressure between 0.2 and 0.7 MPa.

Electrical specifications

Item			Description
Rated voltage V	AC		100(50/60 Hz) 110(50/60 Hz)
	DC		12, 24
Voltage fluctuation range			±10%
Starting current A	AC	100 V	0.056/0.044
		110 V	0.051/0.040
	DC	12 V	-
		24 V	-
Holding current A	AC	100 V	0.028/0.022
		110 V	0.025/0.020
	DC	12 V	0.079(0.083)
		24 V	0.040(0.042)
Power consumption W (*4)	AC	100 V	1.8/1.4 (1.8/1.5)
		110 V	
	DC	12 V	0.95(1.0)
		24 V	
Thermal class			B
Surge suppressor			Option
Indicator			Lamp (option)

*4: Values in ( ) apply when lamp is included.

JIS symbol

● 5-port valve

2-position single

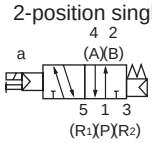

2-position double

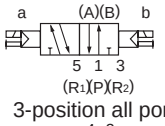

3-position all ports closed

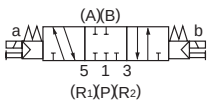

3-position A/B/R connection

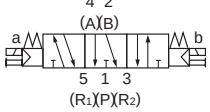

3-position P/A/B connection

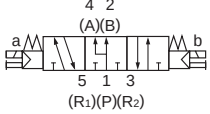

Individual specifications

Item			M4GA4 Direct mount
Max. station No.	Standard (Internal pilot)		15 stations
	Supply/exhaust block specs, external pilot		12 stations
Port size	A/B port		Push-in fitting ø8, ø10, ø12 Rc3/8, G3/8, NPT3/8
	P/R1/R2 port		Rc1/2, G1/2, NPT1/2
Manifold base Weight calculation formula (n: station No.) g		Standard	150n+199
		External pilot	379n+617

For 5 and over manifold station No., use ports on both side for air supply and exhaust.
The manifold base weight is the value for screw specifications.

Performance/characteristics by model

Item			M4GA4 ON	M4GA4 OFF
Response time ms	2-position	Single	40(40)	40(52)
		Double	40(52)	40(52)
	3-position	ABR connection	60(72)	60(72)

Values with lamp/surge suppressor are shown. The response times are values with working pressure of 0.5 MPa at 20°C, without lubrication.
They depend on the pressure and the lubricant quality. Values in ( ) are for AC.

Flow characteristics

Model No.	Solenoid position		P→A/B		A/B→R1/R2	
			C[dm³/(s·bar)]	b	C[dm³/(s·bar)]	b
M4GA4	2-position		7.3	0.12	9.0	0.17
	3-position	All ports closed	6.4	0.15	8.2	0.22
		ABR connection	6.4	0.16	9.3	0.19
		PAB connection	8.0	0.08	8.3	0.22

Note: Effective cross-sectional area S and sonic conductance C are converted as S ≈ 5.0 x C.

Coolant proof specifications

Can be selected with “How to order” Item Ⓔ option “A” on page 730.

Specifications for rechargeable battery (Catalog No. CC-1226A)

● For use in the rechargeable battery manufacturing process, materials used for air path and sliding section are limited

** - Voltage - **P4**

CE marking specifications

** - Voltage - **ST**

- Standard voltage of 24 VDC or less is CE marking-compatible even if the model No. is not indicated with "ST".

How to order

Manifold model No.

M 4GA4 1 0 - 10 - E2 A - 3 - 3

Discrete valve for mounting base

4GA4 1 9 - 10 - E2 A — 3

Ⓐ Model No.
Ⓑ Solenoid position
Ⓒ Port size
Ⓓ Electrical connections
Ⓔ Option
Ⓕ Station No.
Ⓖ Voltage

* Be sure to fill in the "Manifold specifications sheet" (page 810).

Code	Description	Ⓐ Model No. 4GA4
Ⓑ Solenoid position		
1	2-position single	●
2	2-position double	●
3	3-position all ports closed	●
4	3-position ABR connection	●
5	3-position PAB connection	●
8	Mix manifold (when there are multiple solenoid positions)	●
Ⓒ Port size		
Port	A/B Port	P/R1/R2 port Rc1/2
C8	ø8 Push-in fitting	●
C10	ø10 Push-in fitting	●
C12	ø12 Push-in fitting	●
CX	Push-in fitting mix (*1)	●
10	Rc3/8	●
10G	G3/8	● (*2)
10N	NPT3/8	● (*3)
Ⓓ Electrical connections		
Refer to the next page for electrical connections.		
Ⓔ Option		
Blank	None	●
K	External pilot (*4)	●
A	Coolant proof	●
F	A/B port filter integrated (P-port: Standard)	●
Z1	Air supply spacer (*5) (*6)	●
Z3	Exhaust spacer (*5) (*6)	●
Q	Supply and exhaust block (*6)	●
Ⓕ Station No.		
2	2 stations	●
to	to	
15	15 stations (See page 728: max. station No./bore size.)	
Ⓖ Voltage		
1	100 VAC	●
3	24 VDC	●
4	12 VDC	●
5	110 VAC	●

⚠ Precautions for model No. selection

*1 : The push-in fitting cannot be mixed with the discrete valve's 4(A) or 2(B) port.
*2 : P/R port is G1/2.
*3 : P/R port is NPT1/2.
*4 : Consult with CKD when using a vacuum with the external pilot (K).
*5 : Specify the spacer mounting position and quantity in manifold specifications sheet. Refer to pages 796 and 797 for details.
*6 : Cannot be selected with discrete valve for integrated base.

[Electrical connections list]

Ⓓ Electrical connections		Ⓐ Model No. 4GA4
Blank	Grommet lead wire (300 mm)	●
B	DIN terminal box (Pg7) with surge suppressor/indicator lamp	●
E-connector (upward/lateral common)		
E0	Lead wire (300 mm)	●
E00	Lead wire (500 mm)	●
E01	Lead wire (1000 mm)	●
E02	Lead wire (2000 mm)	●
E03	Lead wire (3000 mm)	●
E2	Lead wire (300 mm), surge suppressor/indicator lamp	●
E20	Lead wire (500 mm), surge suppressor/indicator lamp	●
E21	Lead wire (1000 mm), surge suppressor/indicator lamp	●
E22	Lead wire (2000 mm), surge suppressor/indicator lamp	●
E23	Lead wire (3000 mm), surge suppressor/indicator lamp	●
E0N	Without lead wire (without socket)	●
E2N	No lead wire (without socket) , surge suppressor/indicator lamp	●
E3	No lead wire (with socket/terminal), surge suppressor/indicator lamp	●
E1	Without lead wire (socket/terminal attached)	●
EJ type connector (socket with cover, upward/lateral common)		
E01J	Lead wire (1000 mm)	●
E02J	Lead wire (2000 mm)	●
E03J	Lead wire (3000 mm)	●
E21J	Lead wire (1000 mm), surge suppressor/indicator lamp	●
E22J	Lead wire (2000 mm), surge suppressor/indicator lamp	●
E23J	Lead wire (3000 mm), surge suppressor/indicator lamp	●

Electrical connections

Discrete valve/individual wiring manifold

Blank Grommet lead wire

● **Lead wire length**
300 mm

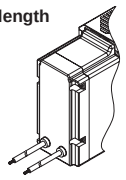

B DIN terminal box

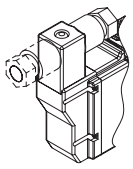

E0* E2* E-connector

● **Lead wire length**
300 mm
500 mm
1000 mm
2000 mm
3000 mm

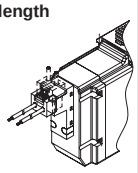

E0*J E2*J EJ type connector

● **Lead wire length**
1000 mm
2000 mm
3000 mm

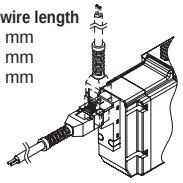

E0N E2N E-connector without socket

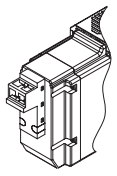

E1 E3 E-connector with socket/terminal

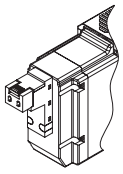

Manifold components and parts list

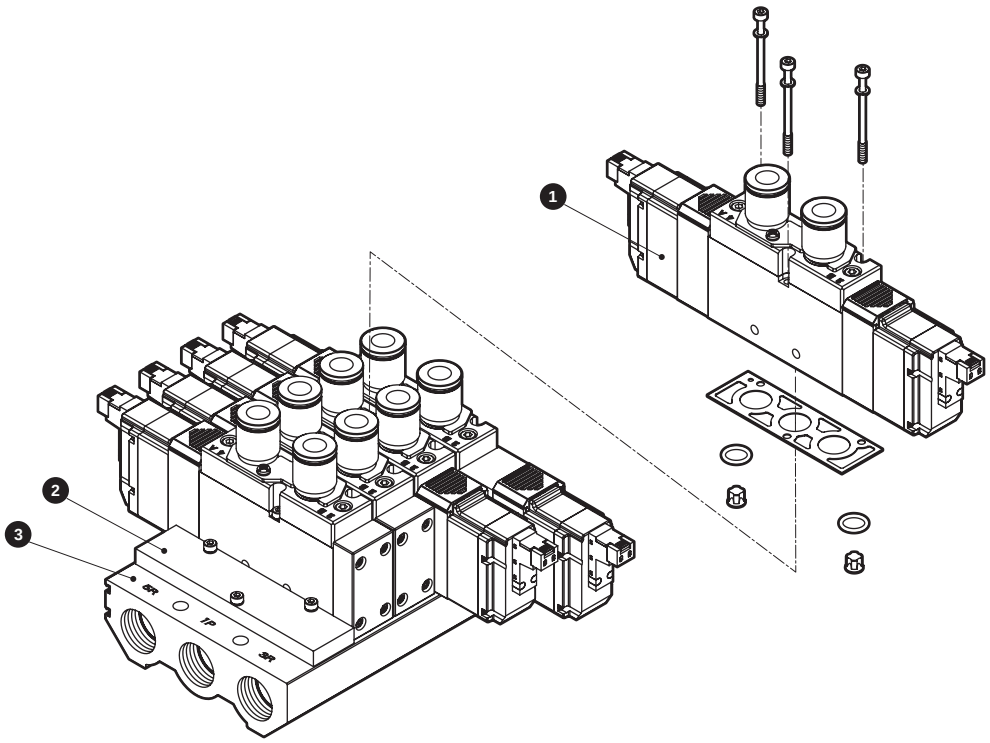

Main parts list

No.	Component name	Model No.	Content	Remarks
1	Discrete valve for mounting base	4GA4□9- Port size - Electrical connections - Option - Voltage Solenoid position	Discrete valve Gasket Mounting screws 3 O-ring 2 Check valve 2 (1)	See table below
2	Masking plate	4GA4-MP	Masking plate Gasket Mounting screws 3 O-ring 2 Check valve 2	
3	Manifold base assembly	M4GA4- Port size - Option - Station No.	Manifold base	See table below

	Size	Tightening torque (N·m)
4GA4	M3	1.7

Port size	
Port	P, R1, R2 port
00	Rc1/2
00G	G1/2
00N	NPT1/2

( ) applies when 4GA419 is selected.

Parts list

No.	Part name	Model No.	No.	Part name		Model No.
-	E-connector Socket assembly	4G4 - SOCKET - ASSY - electrical connections - Voltage	-	Silencer (for Rc1/2)		SLW-15A
-	EJ type connector Socket assembly	4G - SOCKET - ASSY - electrical connections	-	Cartridge push-in fitting and related parts	ø8 straight	4G4-JOINT-C8
					ø10 straight	4G4-JOINT-C10
					ø12 straight	4G4-JOINT-C12

MEMO

Dimensions

M4GA4

● Grommet lead wire (blank)

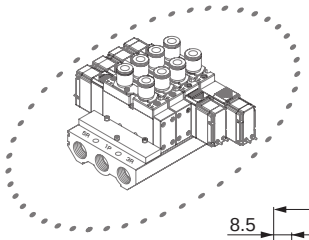

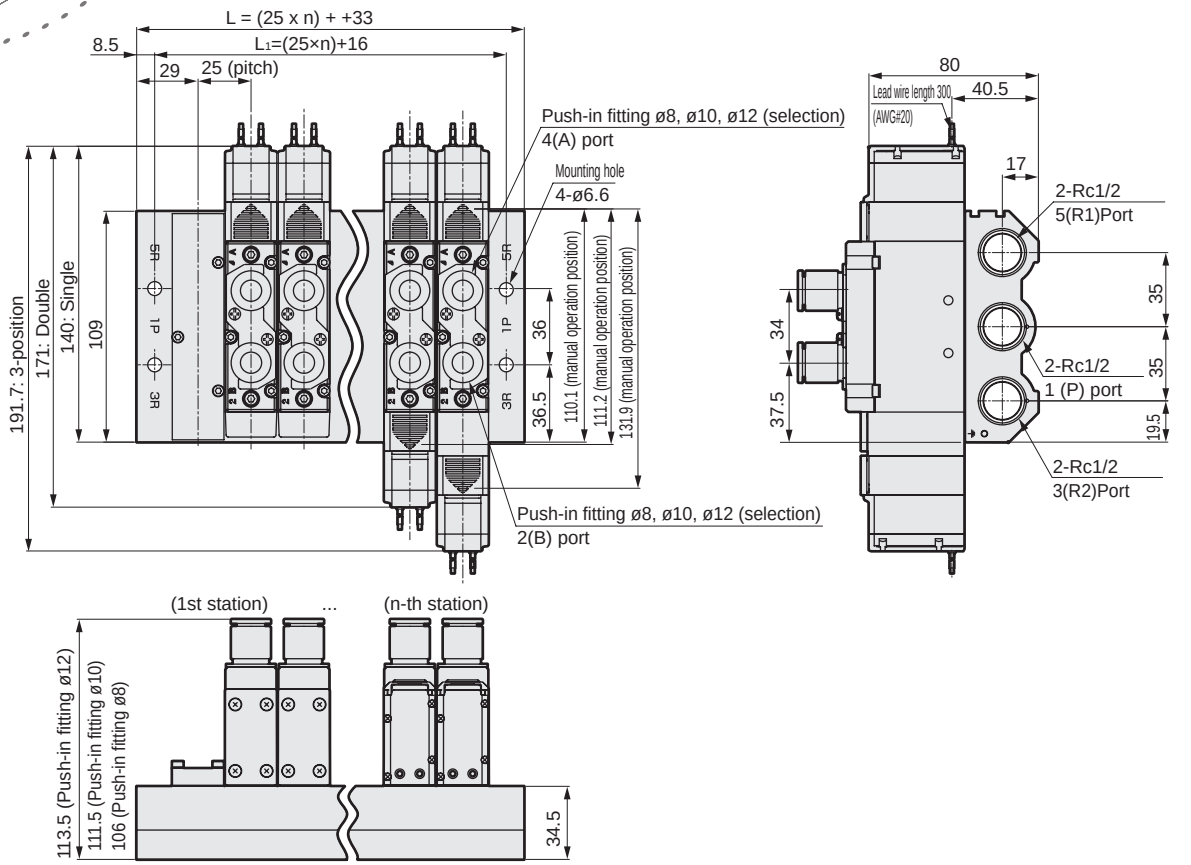

● Rc3/8 female thread (10)

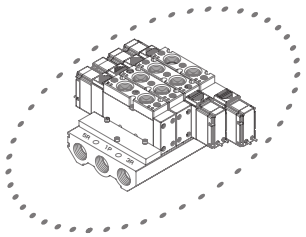

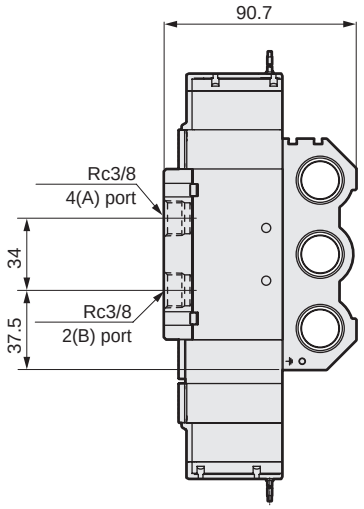

Station No.	2	3	4	5	6	7	8	9	10	11	12	13	14	15
L	83	108	133	158	183	208	233	258	283	308	333	358	383	408
L_1	66	91	116	141	166	191	216	241	266	291	316	341	366	391

Dimensions

● E-connector (E)

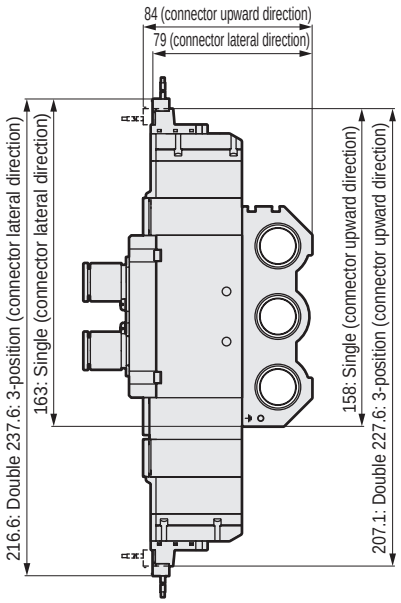

● EJ type connector (E**J)

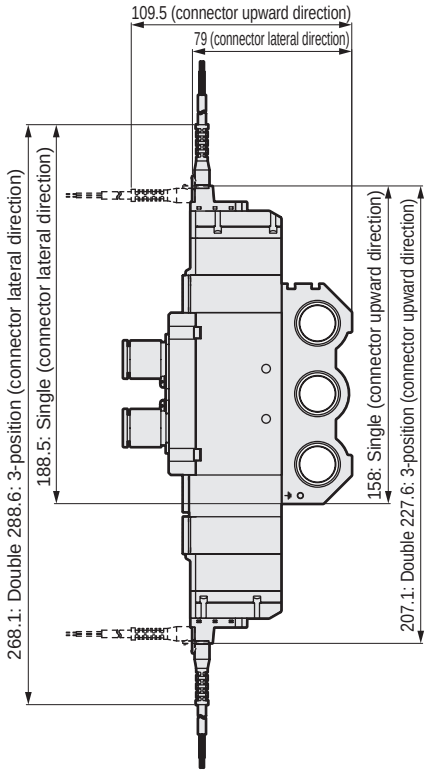

● DIN terminal box (B)

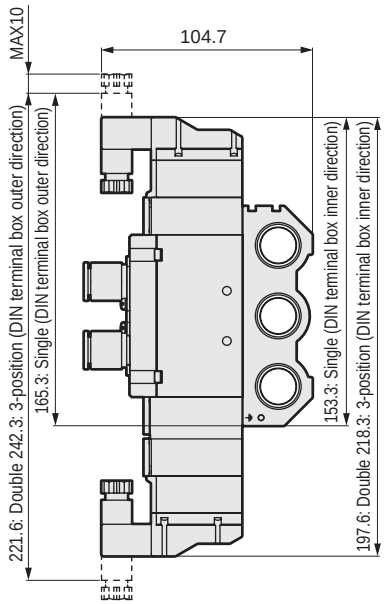

Note: DIN terminal box assembly is shipped facing inward.

Dimensions

M4GA4

● External pilot (K)
Grommet lead wire (blank)

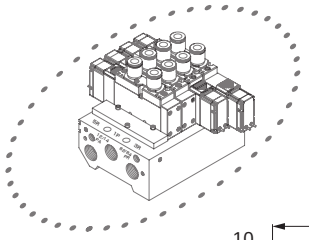

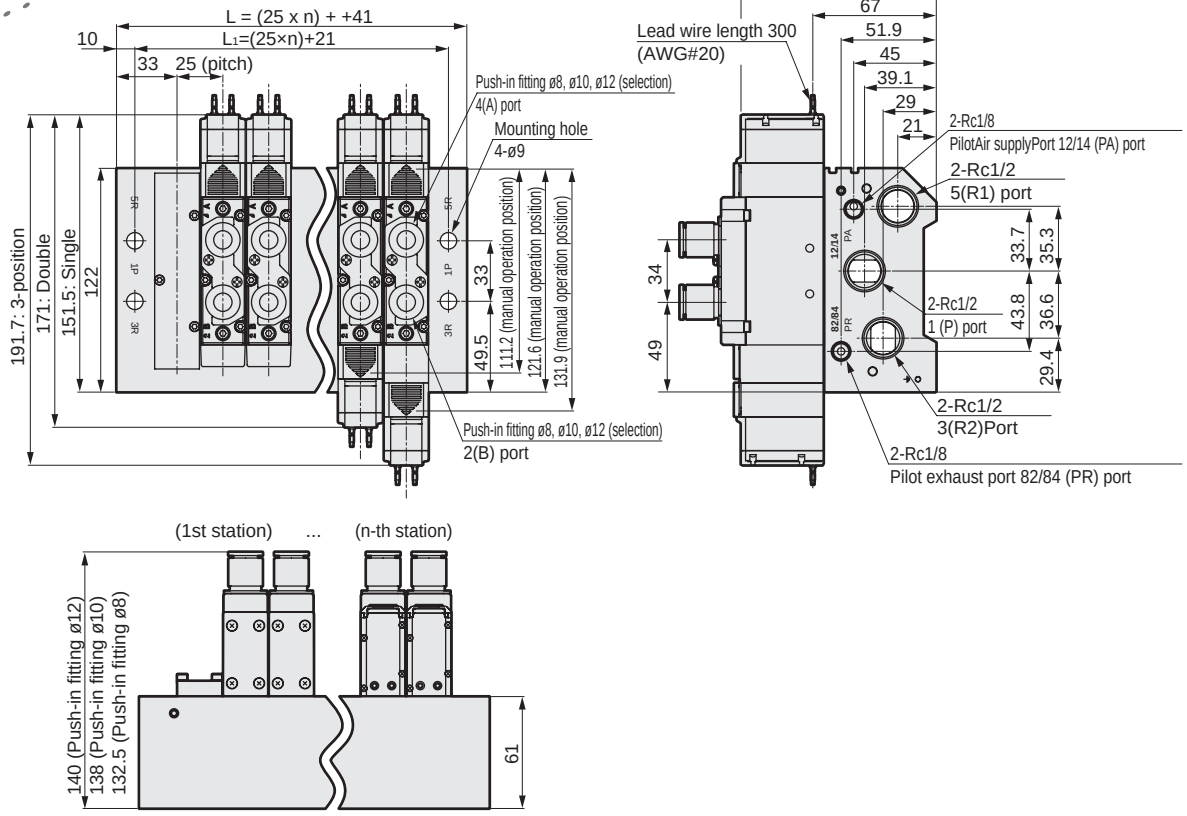

● External pilot (K)
Rc3/8 female thread (10)

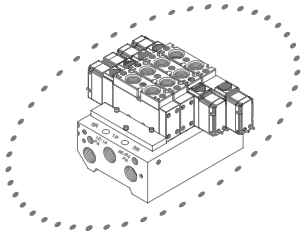

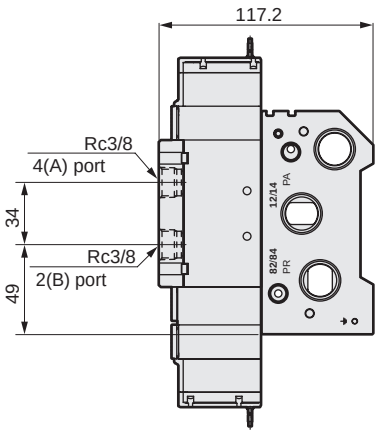

Station No.	2	3	4	5	6	7	8	9	10	11	12
L	91	116	141	166	191	216	241	266	291	316	341
L1	71	96	121	146	171	196	221	246	271	296	321

Dimensions

● External pilot (K)
E-connector (E)

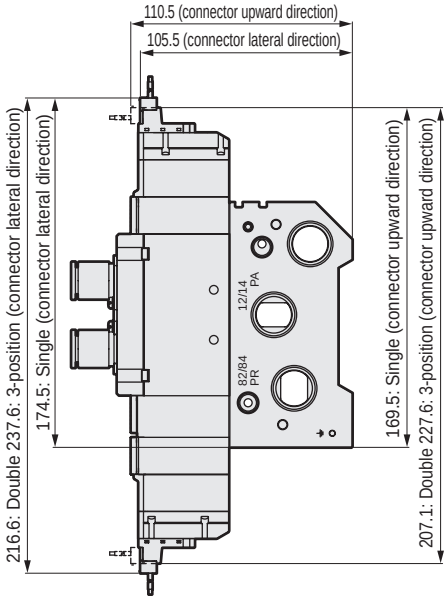

● External pilot (K)
EJ type connector (E**J)

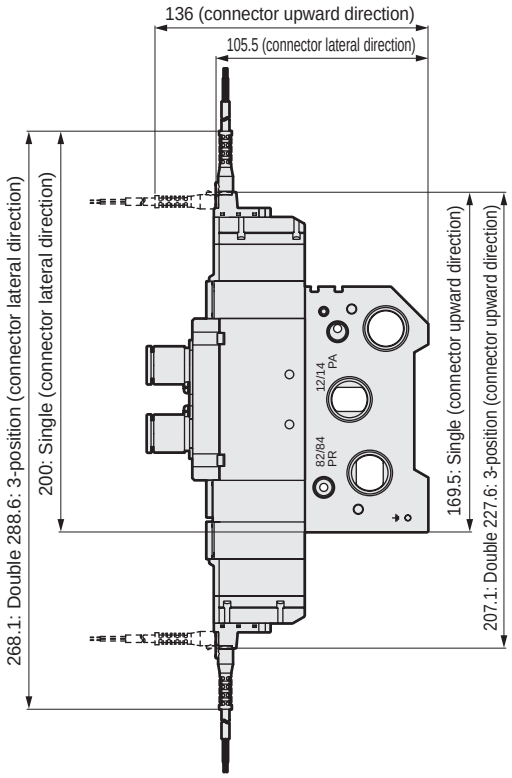

● External pilot (K)
DIN terminal box (B)

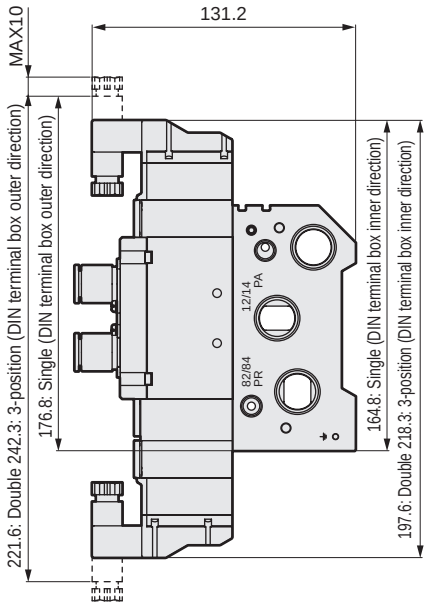

Note: DIN terminal box assembly is shipped facing inward.

Dimensions

M4GA4

● Supply and exhaust block (Q)
Grommet lead wire (blank)

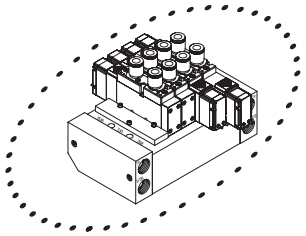

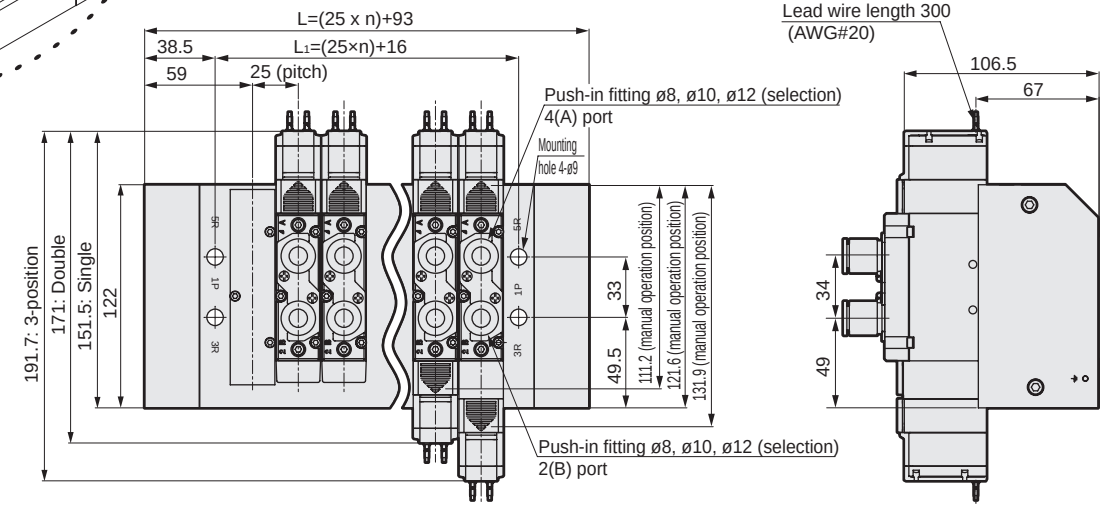

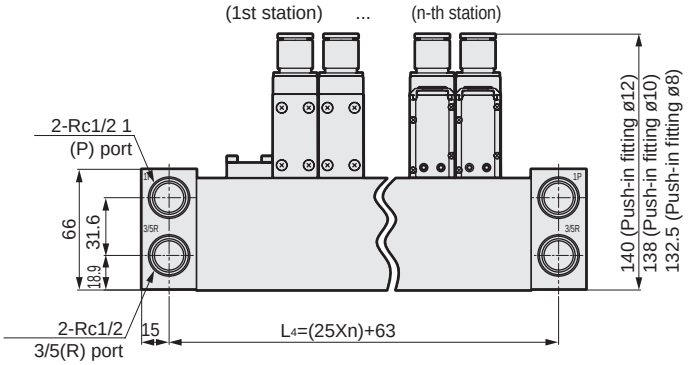

● Supply and exhaust block (Q)
Rc3/8 female thread (10)

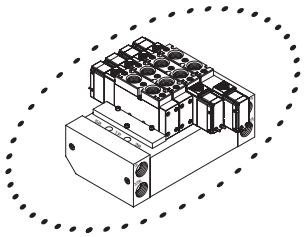

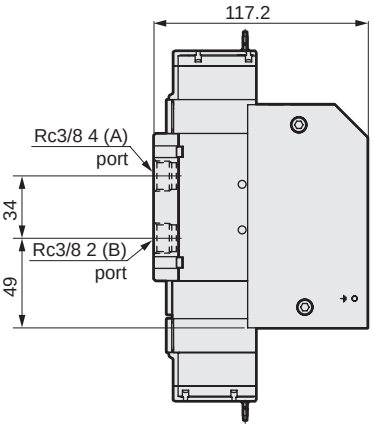

Station No.	2	3	4	5	6	7	8	9	10	11	12
L	143	168	193	218	243	268	293	318	343	368	393
L_1	66	91	116	141	166	191	216	241	266	291	316
L_4	113	138	163	188	213	238	263	288	313	338	363

Dimensions

● Supply and exhaust block (Q)
E-connector (E)

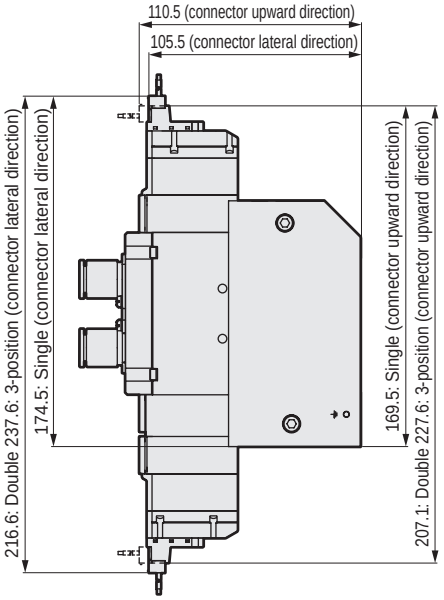

● Supply and exhaust block (Q)
EJ type connector (E**J)

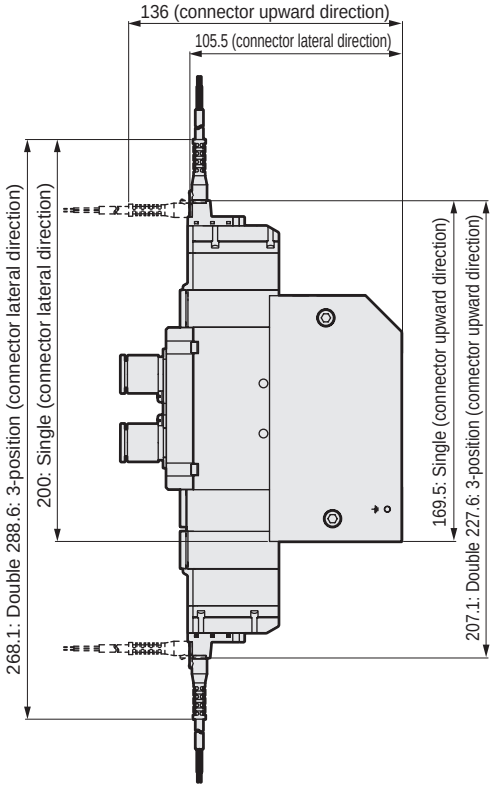

● Supply and exhaust block (Q)
DIN terminal box (B)

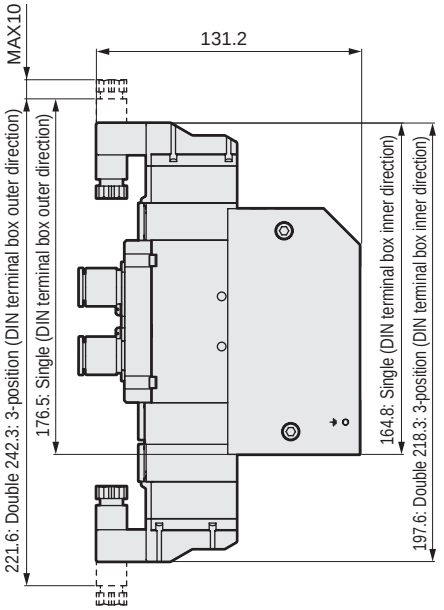

Note: DIN terminal box assembly is shipped facing inward.

Dimensions

M4GA4

● External pilot (K)
Supply and exhaust block (Q)
Grommet lead wire (blank)

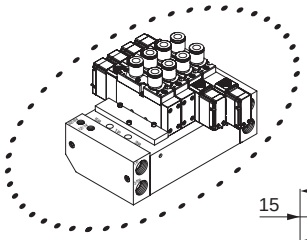

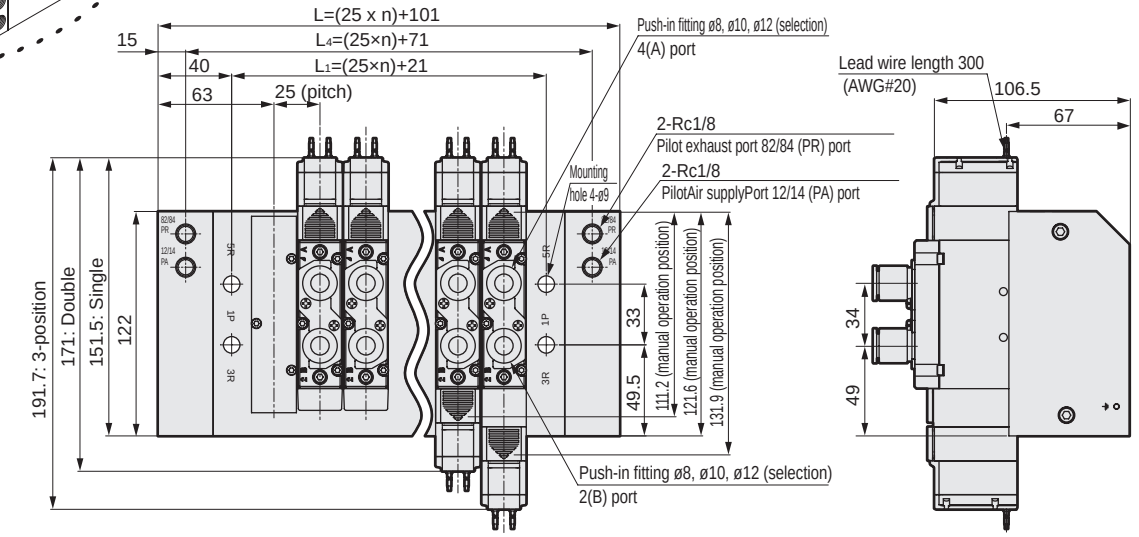

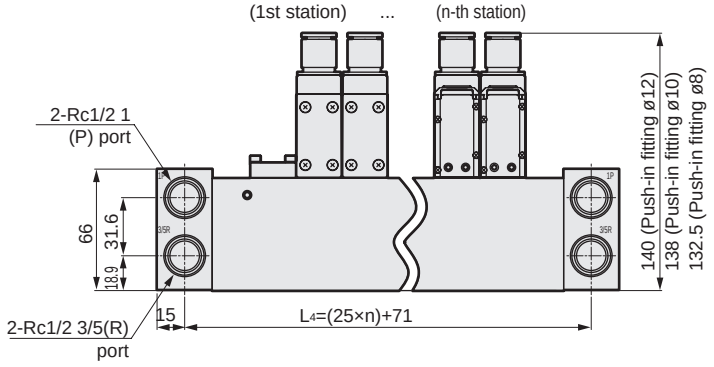

● External pilot (K)
Supply and exhaust block (Q)
Rc female thread (10)

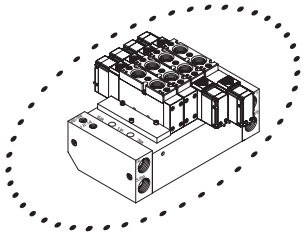

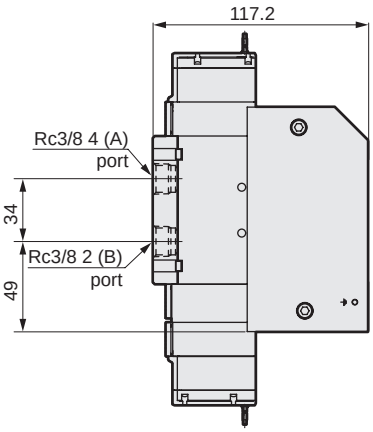

Station No.	2	3	4	5	6	7	8	9	10	11	12
L	151	176	201	226	251	276	301	326	351	376	401
L_1	71	96	121	146	171	196	221	246	271	296	321
L_4	121	146	171	196	221	246	271	296	321	346	371

Dimensions

● External pilot (K)
Supply and exhaust block (Q)
E-connector (E)

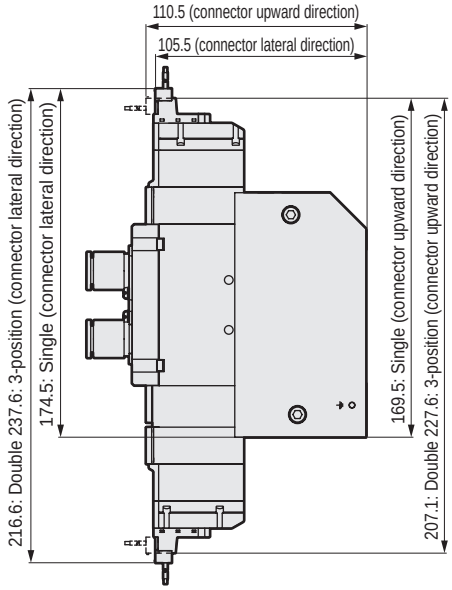

● External pilot (K)
Supply and exhaust block (Q)
EJ type connector (E**J)

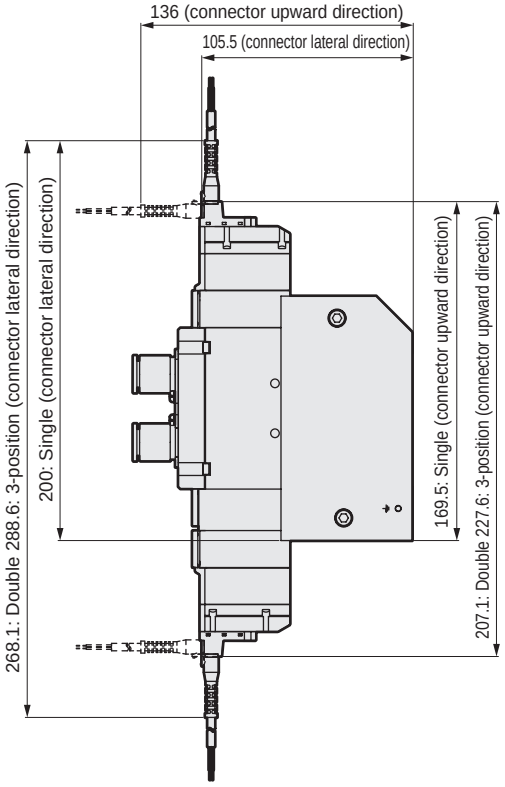

● External pilot (K)
Supply and exhaust block (Q)
DIN terminal box (B)

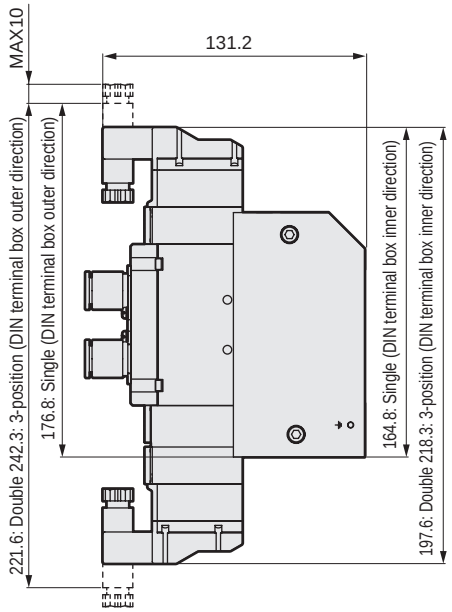

Note: DIN terminal box assembly is shipped facing inward.

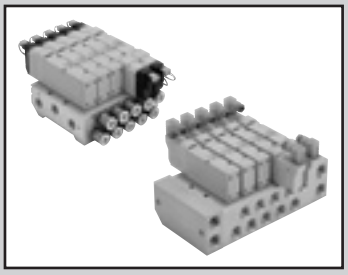

Individual wiring manifold
Base piping
Direct mount

M4GB4-(D) Series

● Cylinder bore size: ø100 to ø140

CE RoHS

Manifold common specifications

Item		Description
Manifold		Integrated base
Mounting method		Direct mount
Supply and exhaust method		Common supply/common exhaust
Pilot exhaust method	Internal pilot	Main valve/pilot valve common exhaust (Pilot exhaust check valve built-in)
	External pilot	Main valve/pilot valve individual exhaust
Piping direction		Lateral direction from base
Valve and operation		Pilot operated soft spool valve
Working fluid		Compressed air
Max. working pressure MPa		0.7 (≈100 psi, 7 bar)
Min. working pressure MPa		0.2 (≈29 psi, 2 bar) (*3)
Proof pressure MPa		1.05 (≈150 psi, 10.5 bar)
Ambient temperature °C		-5 (23°F) to 55 (131°F) (no freezing)
Fluid temperature °C		5 (41°F) to 55 (131°F)
Manual override		Non-locking/locking common
Lubrication (*1)		Not required
Degree of protection (*2)		Dust-proof [IP40 equivalent (DIN terminal box: IP65)]
Vibration resistance m/s^2		50 or less
Shock resistance m/s^2		300 or less
Atmosphere		Cannot be used in corrosive gas environments

*1: Use turbine oil Class 1 ISO VG32 for lubrication. Excessive or intermittent lubrication results in unstable operation.
*2: Avoid water drops or oil, etc., during use.
IP65 (jet-proof) or equivalent applies for DIN terminal box specifications. However, the specified outer diameter of the applicable cord and tightening torque must be used for fixing in place.
*3: The working pressure range is 0 to 0.7 MPa when the external pilot (option code: K) is selected. Set the external pilot pressure between 0.2 and 0.7 MPa.

Electrical specifications

Item			Description
Rated voltage V	AC		100(50/60 Hz) 110(50/60 Hz)
	DC		12, 24
Voltage fluctuation range			±10%
Starting current A	AC	100 V	0.056/0.044
		110 V	0.051/0.040
	DC	12 V	-
		24 V	-
Holding current A	AC	100 V	0.028/0.022
		110 V	0.025/0.020
	DC	12 V	0.079(0.083)
		24 V	0.040(0.042)
Power consumption W (*4)	AC	100 V	1.8/1.4 (1.8/1.5)
		110 V	
	DC	12 V	0.95(1.0)
		24 V	
Thermal class			B
Surge suppressor			Option
Indicator			Lamp (option)

*4: Values in ( ) apply when lamp is included.

Vibration/impact

For DIN rail mount, use with vibration of 30 m/s^2 or less and impact of 150 m/s^2 or less.

JIS symbol

● 5-port valve

2-position single

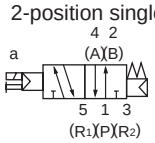

2-position double

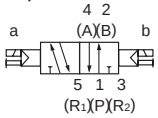

3-position all ports closed

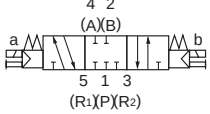

3-position A/B/R connection



3-position P/A/B connection

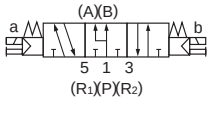

Individual specifications

Item		M4GB4			
		Direct mount			DIN rail mount (*4)
Pilot operated		Standard (Internal pilot)		External pilot (*3)	Standard (Internal pilot)
Max. station No.		15 stations	12 stations		5 stations
Port size	A/B port	Push-in fitting ø8, ø10, ø12 Rc1/4, Rc3/8 G1/4, G3/8 NPT1/4, NPT3/8	Rc1/2, G1/2, NPT1/2	Push-in fitting ø8, ø10, ø12 Rc1/4, Rc3/8, Rc1/2 G1/4, G3/8, G1/2 NPT1/4, NPT3/8, NPT1/2	Push-in fitting ø8, ø10, ø12 Rc1/4, Rc3/8 G1/4, G3/8 NPT1/4, NPT3/8
	P/R1/R2 port	Rc3/8, G3/8, NPT3/8 (*1)	Rc1/2, G1/2, NPT1/2 (*2)		Rc3/8, G3/8, NPT3/8
Manifold base Weight calculation formula (n: station No.) g		273n+329	391n+560	392n+555	278n+1082

Refer to “Cautions for mounting the DIN rail” (page 854), and select the manifold.
For 5 and over manifold station No., use ports on both side for air supply and exhaust.
The manifold base weight is the value for screw specifications.

Dimensions of port sizes (P/R1/R2 port) Rc3/8 and Rc1/2 are different.
*1: Refer to pages 748 to 749 and 754 to 755 for dimensions of port size Rc3/8.
*2: Refer to pages 750 to 751 and 756 to 757 for dimensions of port size Rc1/2.
*3: Refer to pages 752 to 753 and 758 to 759 for dimensions of the external pilot (option code: K).
*4: Refer to pages 754 to 755 for dimensions of the DIN rail mount (option code: D).

Performance/characteristics by model

Item			M4GB4	
			ON	OFF
Response time ms	2-position	Single	40 (40)	40 (52)
		Double	40 (52)	40 (52)
	3-position	ABR connection	60 (72)	60 (72)

Values with lamp/surge suppressor are shown. The response times are values with working pressure of 0.5 MPa at 20°C, without lubrication. They depend on the pressure and the lubricant quality. Values in ( ) are for AC.

Flow characteristics

Model No.	Port size P, R1, R2	Solenoid position		P → A/B		A/B→R1/R2	
				C[dm³/(s•bar)]	b	C[dm³/(s•bar)]	b
M4GB4	(*1)Rc3/8 G3/8 NPT3/8	2-position		6.4	0.42	6.9	0.12
		3-position	All ports closed	6.0	0.37	6.8	0.12
			ABR connection	6.1	0.38	7.1	0.15
			PAB connection	6.0	0.37	6.8	0.13
	(*2)Rc1/2 G1/2 NPT1/2	2-position		8.3	0.23	9.0	0.21
		3-position	All ports closed	7.4	0.15	8.8	0.19
			ABR connection	7.5	0.15	9.5	0.21
			PAB connection	7.7	0.21	8.7	0.18

Dimensions of port sizes (P/R1/R2 port) Rc3/8 and Rc1/2 are different.
*1 : Refer to pages 748 to 749 and 754 to 755 for dimensions of port size Rc3/8.
*2 : Refer to pages 750 to 751 and 756 to 757 for dimensions of port size Rc1/2.
*3 : Effective cross-sectional area S and sonic conductance C are converted as S ≈ 5.0 x C.

Coolant proof specifications

Can be selected with “How to order” Item Ⓔ option “A” on page 744.

Specifications for rechargeable battery

(Catalog No. CC-1226A)

● For use in the rechargeable battery manufacturing process, materials used for air path and sliding section are limited

** - Voltage - **P4**

CE marking specifications

** - Voltage - **ST**

・Standard voltage of 24 VDC or less is CE marking-compatible even if the model No. is not indicated with "ST".

How to order

Manifold model No.

M 4GB4 1 0 - 10 - E2 Q D - 3 - 3

Discrete valve for mounting base

4GB4 1 9 - 00 - E2 A — 3

Ⓐ Model No. Ⓑ Solenoid position Ⓒ Port size Ⓓ Electrical connections Ⓔ Option Ⓕ Mount Ⓖ Station No. Ⓗ Voltage

* Be sure to fill in the "Manifold specifications sheet" (page 810).

Code	Description	Ⓐ Model No. 4GB4
Ⓑ Solenoid position		
1	2-position single	●
2	2-position double	●
3	3-position all ports closed	●
4	3-position ABR connection	●
5	3-position PAB connection	●
8	Mix manifold (when there are multiple solenoid positions)	●

Ⓒ Port size

Port	A/B Port	P/R1/R2 port (*1) Option: Other than K Rc3/8 (*2)	Rc1/2 (*3)	Option: K Rc1/2 (*4)
C8	ø8 Push-in fitting	●		●
C10	ø10 Push-in fitting	●		●
C12	ø12 Push-in fitting	●		●
CX	Push-in fitting mix	●		●
08	Rc1/4	●		●
10	Rc3/8	●		●
15	Rc1/2		●	●
08G	G1/4	● (*5)		● (*5)
10G	G3/8	● (*5)		● (*5)
15G	G1/2		● (*5)	● (*5)
08N	NPT1/4	● (*6)		● (*6)
10N	NPT3/8	● (*6)		● (*6)
15N	NPT1/2		● (*6)	● (*6)

Ⓓ Electrical connections

Refer to the next page for electrical connections.

Ⓔ Option

Blank	None	●
K	External pilot (*4) (*7)	●
A	Coolant proof	●
F	A/B port filter integrated (P-port: Standard)	●
Z1	Air supply spacer (*8) (*11)	●
Z3	Exhaust spacer (*8) (*11)	●
Q	Supply and exhaust block (*11)	●

Ⓕ Mount

Blank	Direct mount	●
D	DIN rail mount (*9) (*10) (*11)	●

Ⓖ Station No.

2	2 stations	●
to	to	
15	Refer to page 742 for the max. station number per bore size.	

Ⓗ Voltage

1	100 VAC	●
3	24 VDC	●
4	12 VDC	●
5	110 VAC	●

is not available.

⚠ Precautions for model No. selection

*1 : Two types of bases are available. Dimensions differ by bore size of the P/R1/R2 port.
*2 : Refer to pages 748 to 749 and 754 to 755 for dimensions of port size Rc3/8.
*3 : Refer to pages 750 to 751 and 756 to 757 for dimensions of port size Rc1/2.
*4 : Refer to pages 752 to 753 and 758 to 759 for dimensions of the external pilot (option code: K).
*5 : P/R port is G thread.
*6 : P/R port is NPT thread.
*7 : Consult with CKD when using a vacuum with the external pilot (K).
*8 : Specify the spacer mounting position and quantity in manifold specifications sheet. Refer to pages 796 and 797 for details.
*9 : DIN rail mounting is only for the P/R port Rc3/8 base and not for the external pilot. For DIN rail mounting, select the supply and exhaust block as well. The max. station number is 5.
*10: Refer to pages 754 and 755 for dimensions of the DIN rail mount (option code: D).
*11: Cannot be selected with discrete valve for integrated base.

[Electrical connections list]

Ⓓ Electrical connections		Ⓐ Model No. 4GB4
Blank	Grommet lead wire (300 mm)	●
B	DIN terminal box (Pg7) with surge suppressor/indicator lamp	●
E-connector (upward/lateral common)		
E0	Lead wire (300 mm)	●
E00	Lead wire (500 mm)	●
E01	Lead wire (1000 mm)	●
E02	Lead wire (2000 mm)	●
E03	Lead wire (3000 mm)	●
E2	Lead wire (300 mm), surge suppressor/indicator lamp	●
E20	Lead wire (500 mm), surge suppressor/indicator lamp	●
E21	Lead wire (1000 mm), surge suppressor/indicator lamp	●
E22	Lead wire (2000 mm), surge suppressor/indicator lamp	●
E23	Lead wire (3000 mm), surge suppressor/indicator lamp	●
E0N	Without lead wire (without socket)	●
E2N	No lead wire (without socket), surge suppressor/indicator lamp	●
E3	No lead wire (with socket/terminal), surge suppressor/indicator lamp	●
E1	Without lead wire (socket/terminal attached)	●
EJ type connector (socket with cover, upward/lateral common)		
E01J	Lead wire (1000 mm)	●
E02J	Lead wire (2000 mm)	●
E03J	Lead wire (3000 mm)	●
E21J	Lead wire (1000 mm), surge suppressor/indicator lamp	●
E22J	Lead wire (2000 mm), surge suppressor/indicator lamp	●
E23J	Lead wire (3000 mm), surge suppressor/indicator lamp	●

Electrical connections

Discrete valve/individual wiring manifold

Blank Grommet lead wire

● **Lead wire length**
300 mm

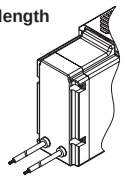

B DIN terminal box

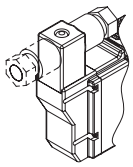

E0* **E2*** E-connector

● **Lead wire length**
300 mm
500 mm
1000 mm
2000 mm
3000 mm

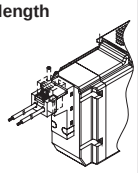

E0*J **E2*J** EJ type connector

● **Lead wire length**
1000 mm
2000 mm
3000 mm

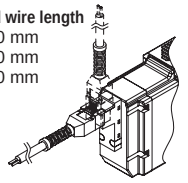

E0N **E2N** E-connector without socket

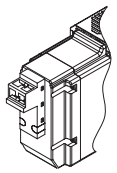

E1 **E3** E-connector with socket/terminal

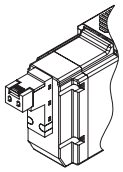

Manifold components explanation and parts list

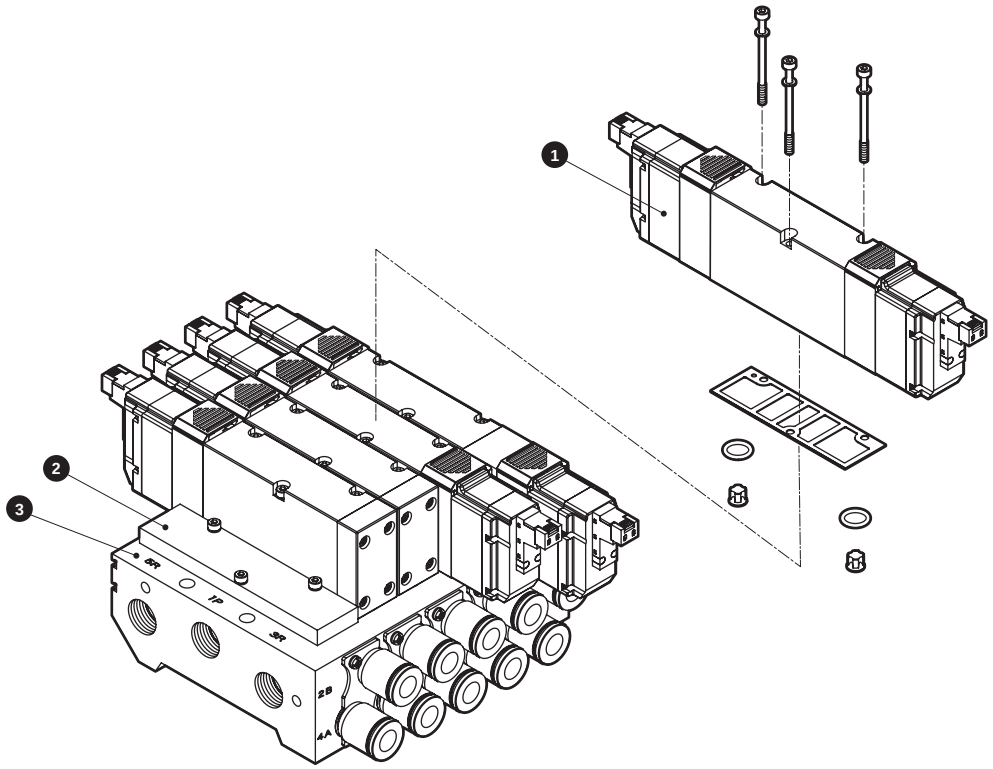

Main parts list

No.	Component name	Model No.	Content	Remarks
1	Discrete valve for mounting base	4GB4□9-00- [Electrical connections] [Option] [Voltage] [Solenoid position]	Discrete valve Gasket Mounting screws 3 O-ring 2 Check valve 2 (1)	Size: 4GB4 M3, Tightening torque (N·m): 1.7
2	Masking plate	4GB4-MP	Masking plate Gasket Mounting screws 3 O-ring 2 Check valve 2	
3	Manifold base assembly	M4GB4- [Port size] - [Option] [D] - [Station No.] [Mount]	Manifold base	If “D” is selected, shipment is made with a DIN rail mounted.

( ) applies when 4GB419 is selected.

Parts list

No.	Part name	Model No.	No.	Part name		Model No.
-	E-connector socket assembly	4G4 - SOCKET - ASSY - [electrical connections] - [Voltage]	-	Silencer	For Rc1/2	SLW-15A
					For Rc3/8	SLW-10A, SLW-10L
-	EJ type connector socket assembly	4G - SOCKET - ASSY - [electrical connections]	-	Cartridge push-in fitting and related parts	ø8 straight	4G4-JOINT-C8
					ø10 straight	4G4-JOINT-C10
					ø12 straight	4G4-JOINT-C12

MEMO

Dimensions

M4GB4

● Grommet lead wire (blank)

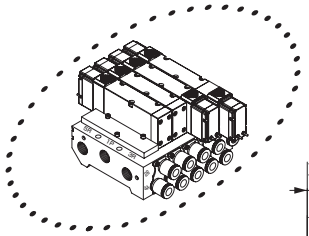

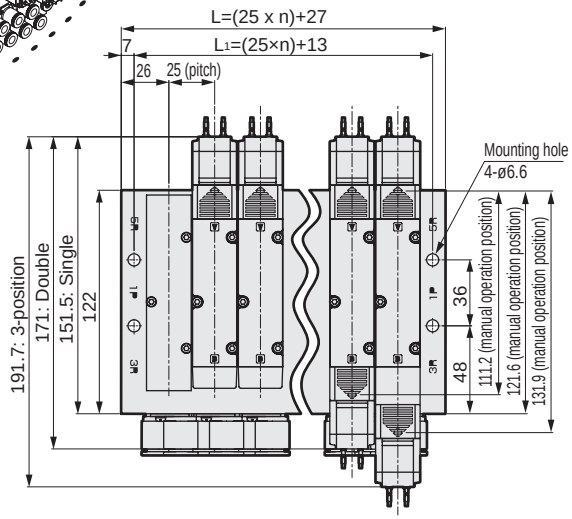

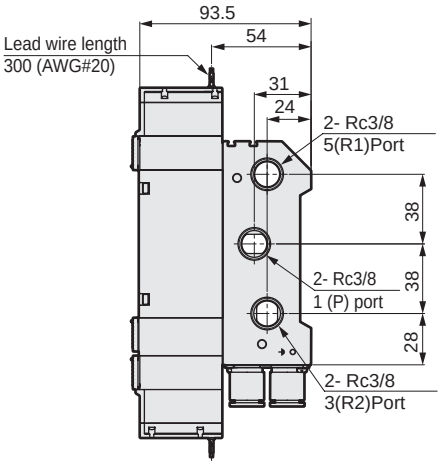

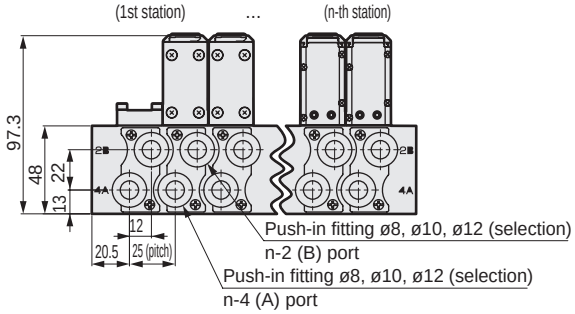

● Rc1/4, Rc3/8 female thread (08, 10)

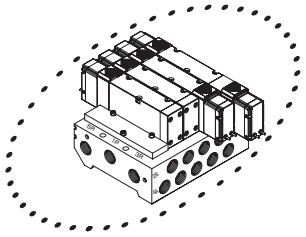

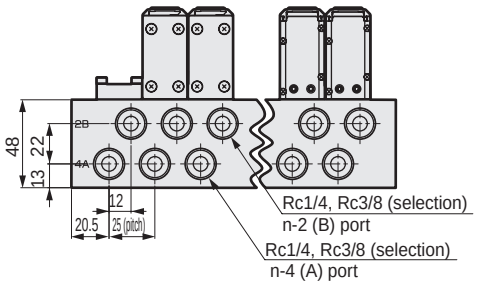

Station No.	2	3	4	5	6	7	8	9	10	11	12	13	14	15
L	77	102	127	152	177	202	227	252	277	302	327	352	377	402
L1	63	88	113	138	163	188	213	238	263	288	313	338	363	388

Dimensions

● E-connector (E)

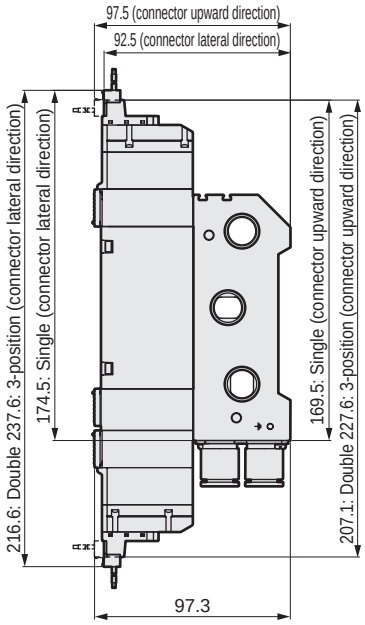

● EJ type connector (E**J)

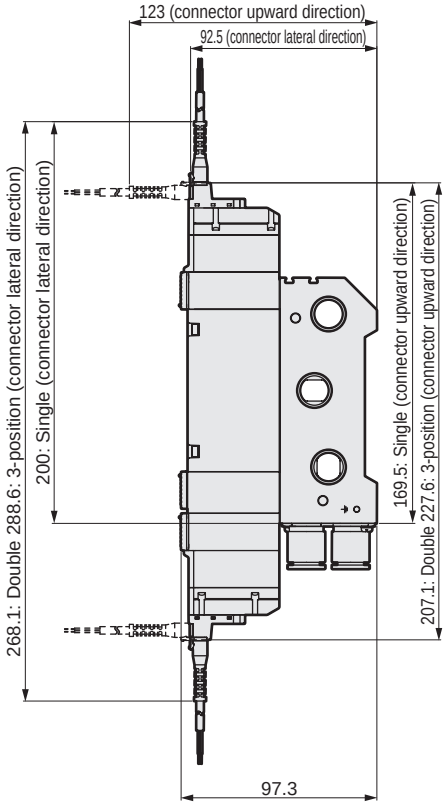

● DIN terminal box (B)

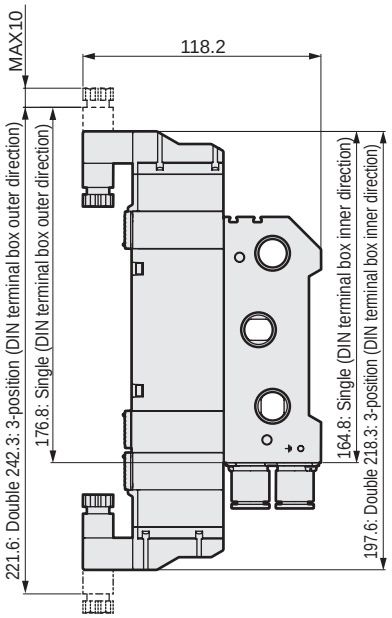

Note: DIN terminal box assembly is shipped facing inward.

Dimensions

M4GB4

● Rc1/2 female thread
Grommet lead wire (blank)

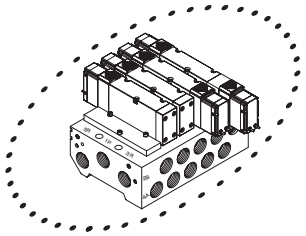

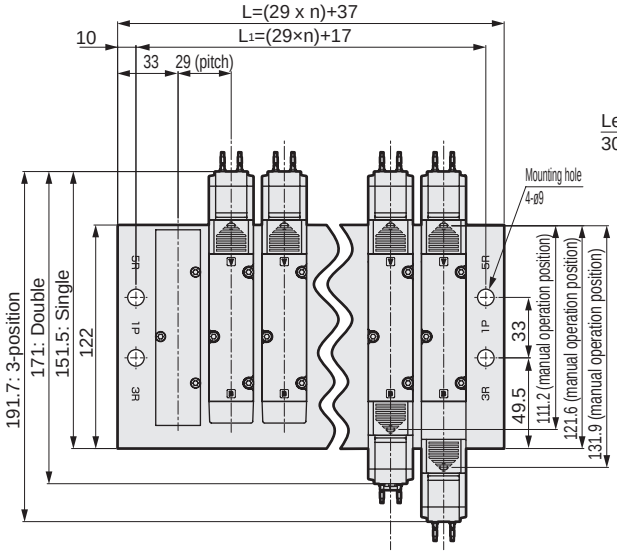

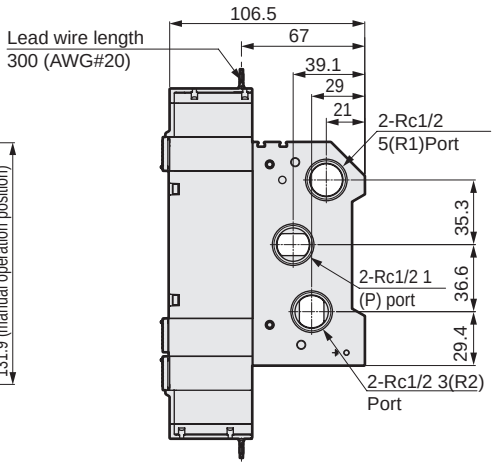

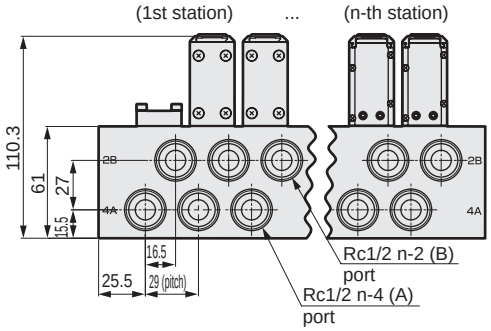

Station No.	2	3	4	5	6	7	8	9	10	11	12
L	95	124	153	182	211	240	269	298	327	356	385
L1	75	104	133	162	191	220	249	278	307	336	365

Dimensions

● Rc1/2 female thread (15)
E-connector (E)

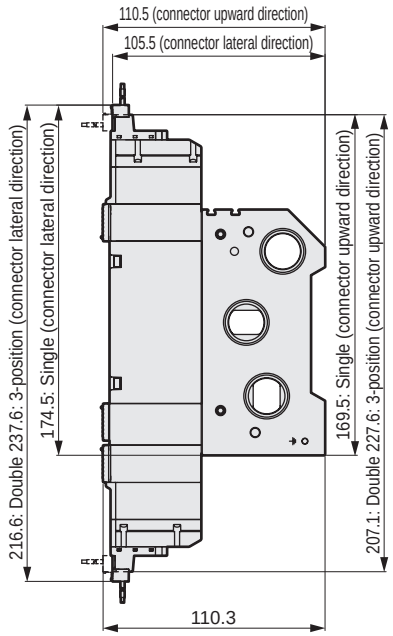

● Rc1/2 female thread (15)
EJ type connector (E**J)

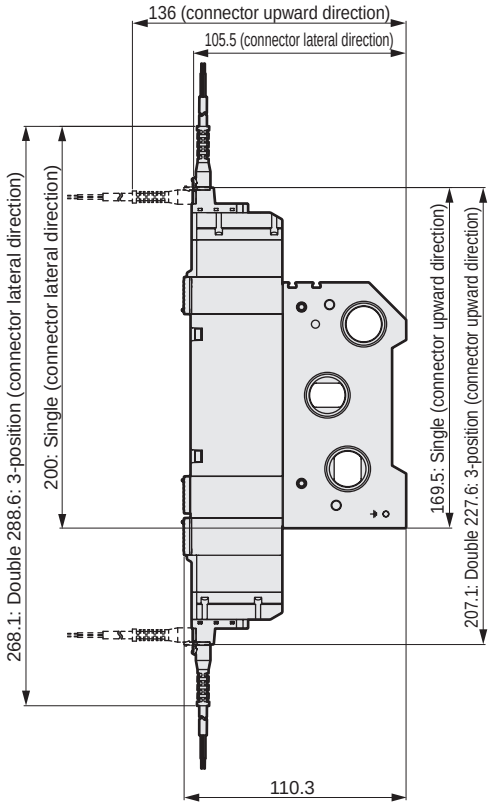

● Rc1/2 female thread (15)
DIN terminal box (B)

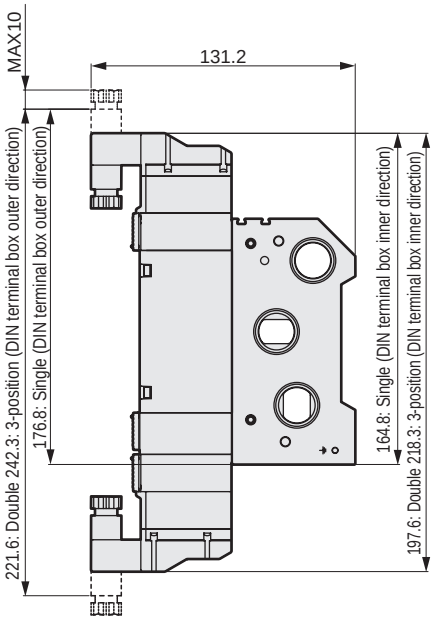

Dimensions

M4GB4

● External pilot (K)
Grommet lead wire (blank)

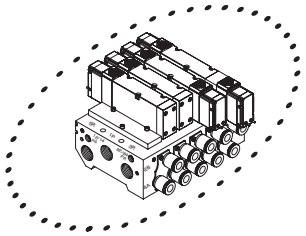

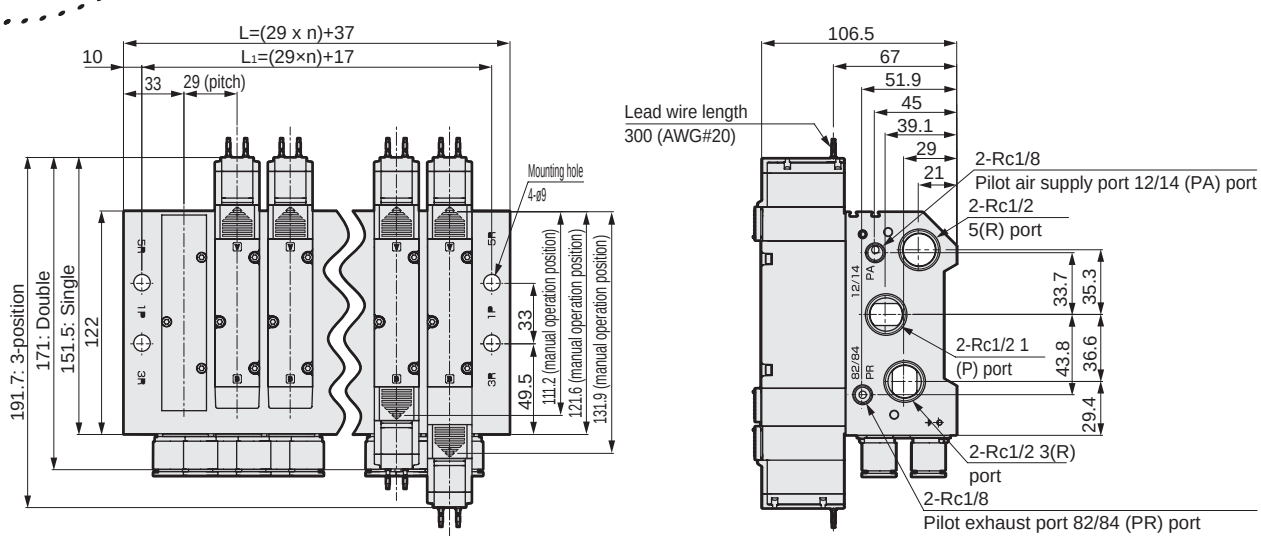

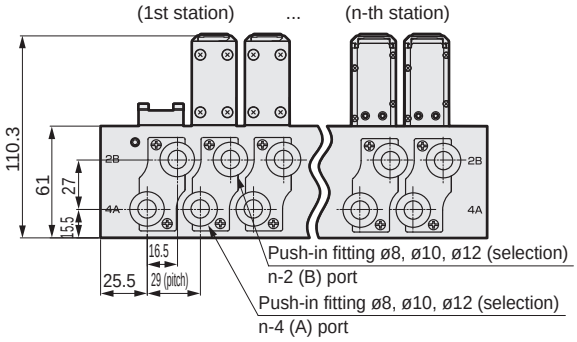

● External pilot (K)
Rc1/4, Rc3/8, Rc1/2 female thread (08, 10, 15)

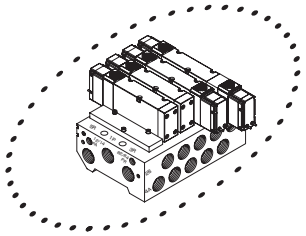

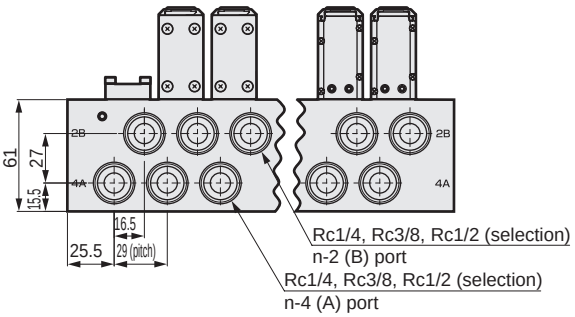

Station No.	2	3	4	5	6	7	8	9	10	11	12
L	95	124	153	182	211	240	269	298	327	356	385
L_1	75	104	133	162	191	220	249	278	307	336	365

Dimensions

● External pilot (K)
E-connector (E)

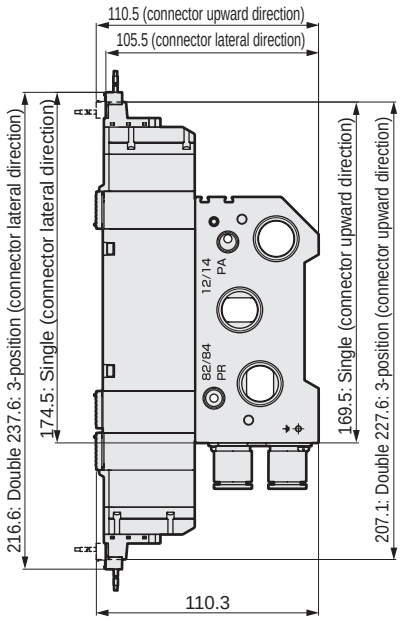

● External pilot (K)
EJ type connector (E**J)

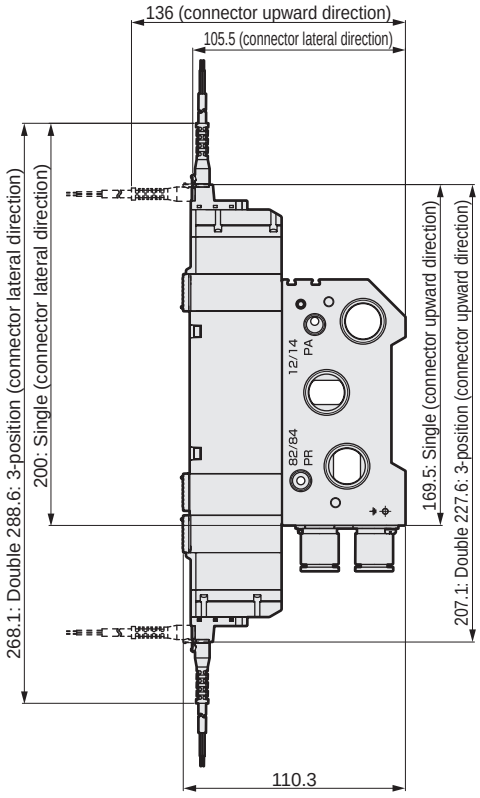

● External pilot (K)
DIN terminal box (B)

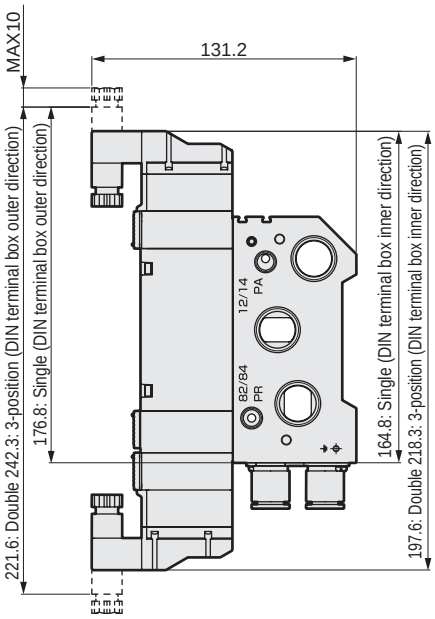

Note: DIN terminal box assembly is shipped facing inward.

Dimensions

M4GB4

● Supply and exhaust block (Q)
Grommet lead wire (blank)

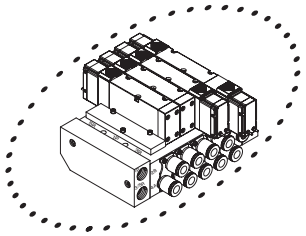

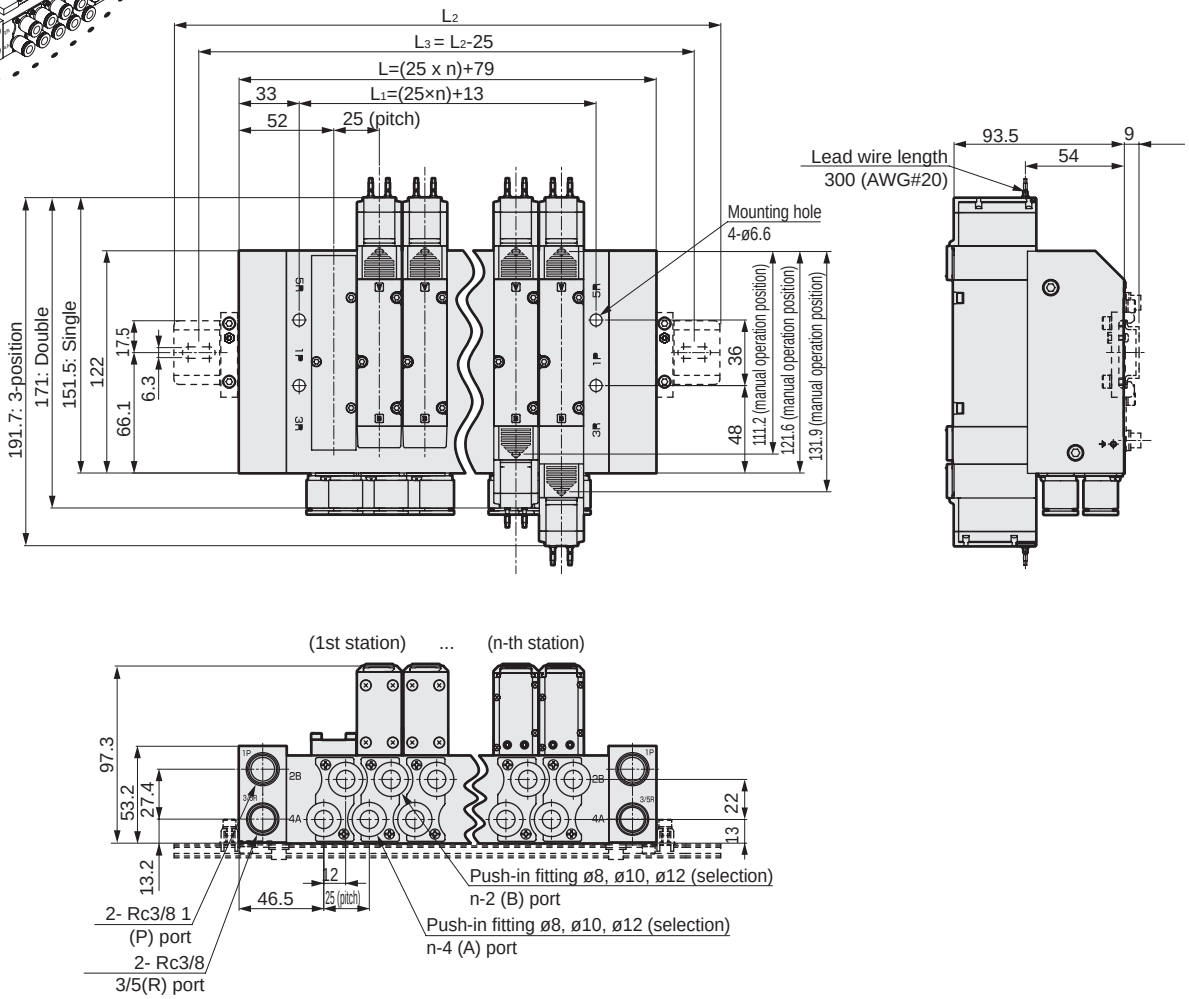

● Supply and exhaust block (Q)
Rc1/4, Rc3/8 female thread (08, 10)

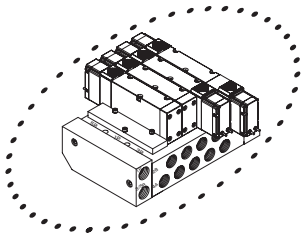

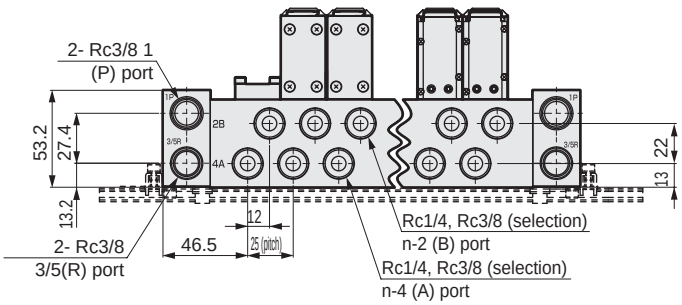

Station No.	2	3	4	5	6	7	8	9	10	11	12	13	14	15
L	129	154	179	204	229	254	279	304	329	354	379	404	429	454
L_1	63	88	113	138	163	188	213	238	263	288	313	338	363	388
L_2	200	225	250	275										
L_3	175	200	225	250										

Dimensions

● Supply and exhaust block (Q)
E-connector (E)

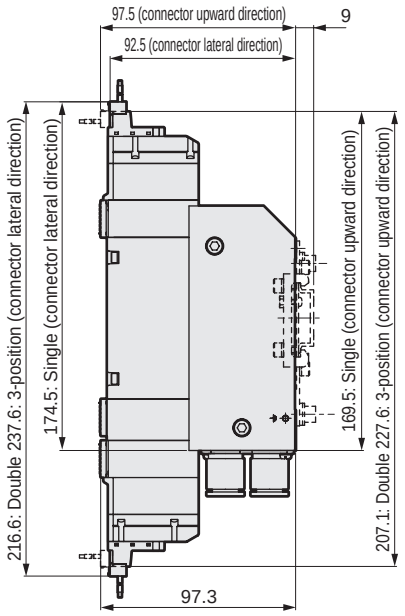

● Supply and exhaust block (Q)
EJ type connector (E**J)

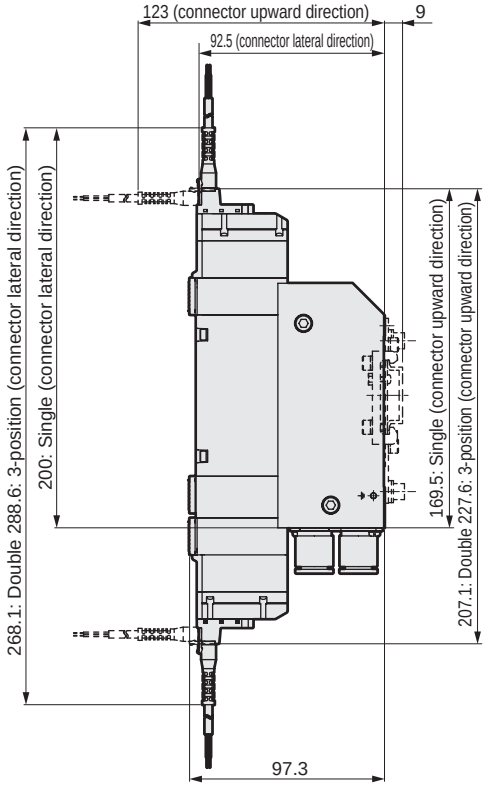

● Supply and exhaust block (Q)
DIN terminal box (B)

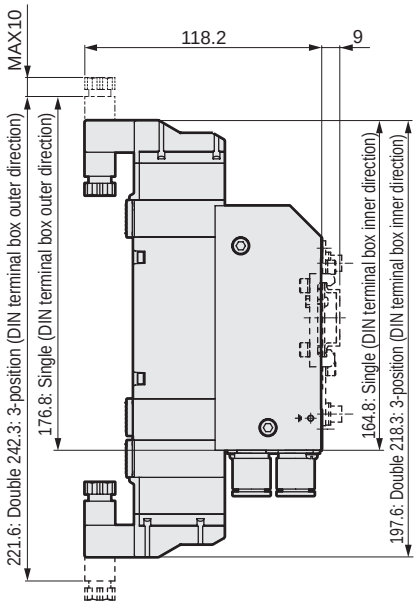

Note: DIN terminal box assembly is shipped facing inward.

Dimensions

● Supply and exhaust block (Q)
Rc1/2 female thread
Grommet lead wire (blank)

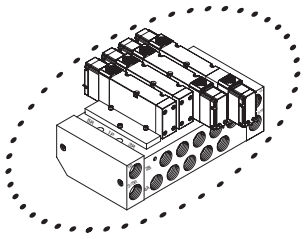

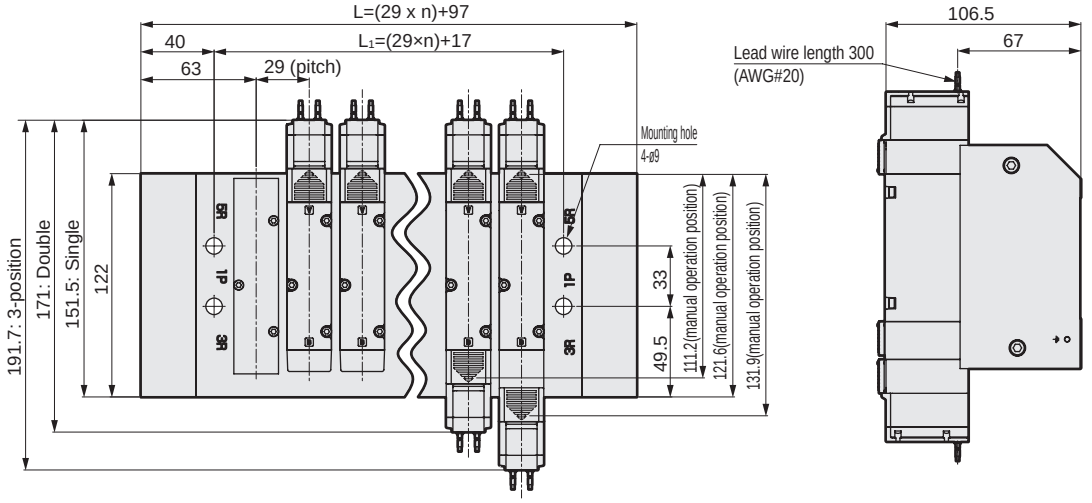

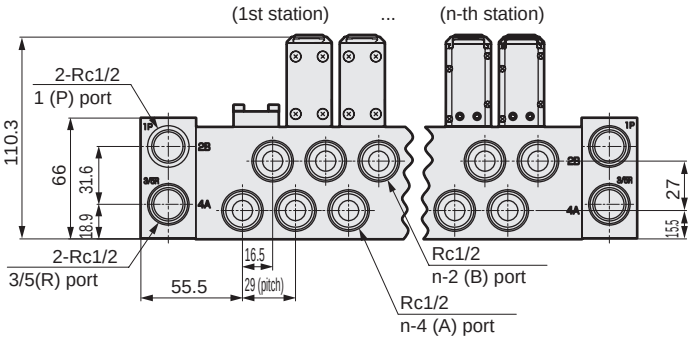

Station No.	2	3	4	5	6	7	8	9	10	11	12
L	155	184	213	242	271	300	329	358	387	416	445
L_1	75	104	133	162	191	220	249	278	307	336	365

Dimensions

● Supply and exhaust block (Q)
Rc1/2 female thread (15)
E-connector (E)

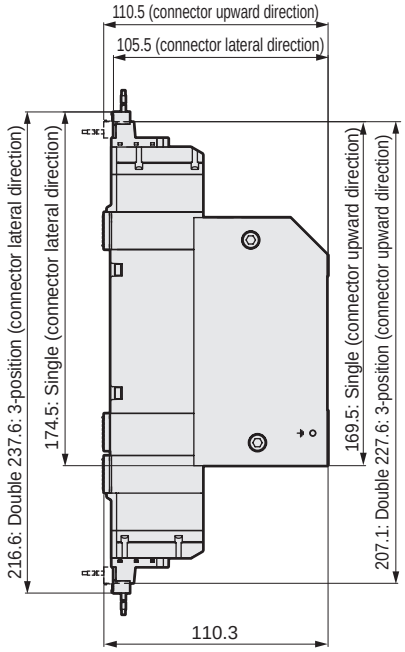

● Supply and exhaust block (Q)
Rc1/2 female thread (15)
EJ type connector (E**J)

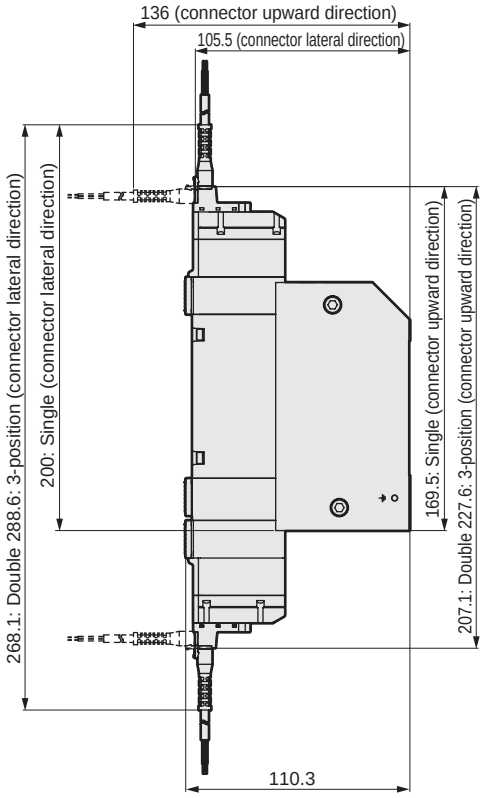

● Supply and exhaust block (Q)
Rc1/2 female thread (15)
DIN terminal box (B)

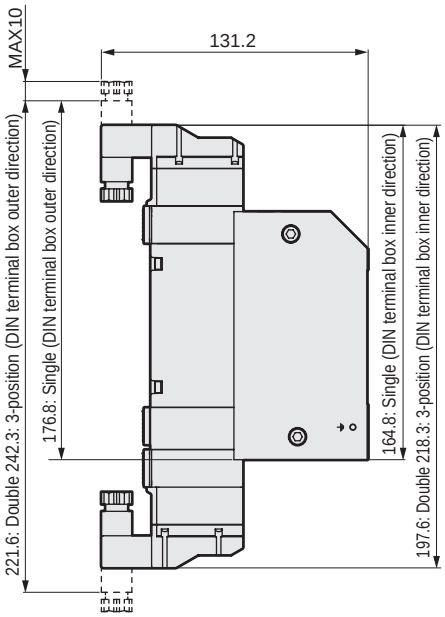

Note: DIN terminal box assembly is shipped facing inward.

Dimensions

● External pilot (K)
Supply and exhaust block (Q)
Grommet lead wire (blank)

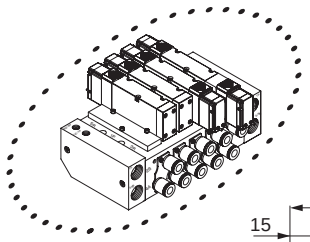

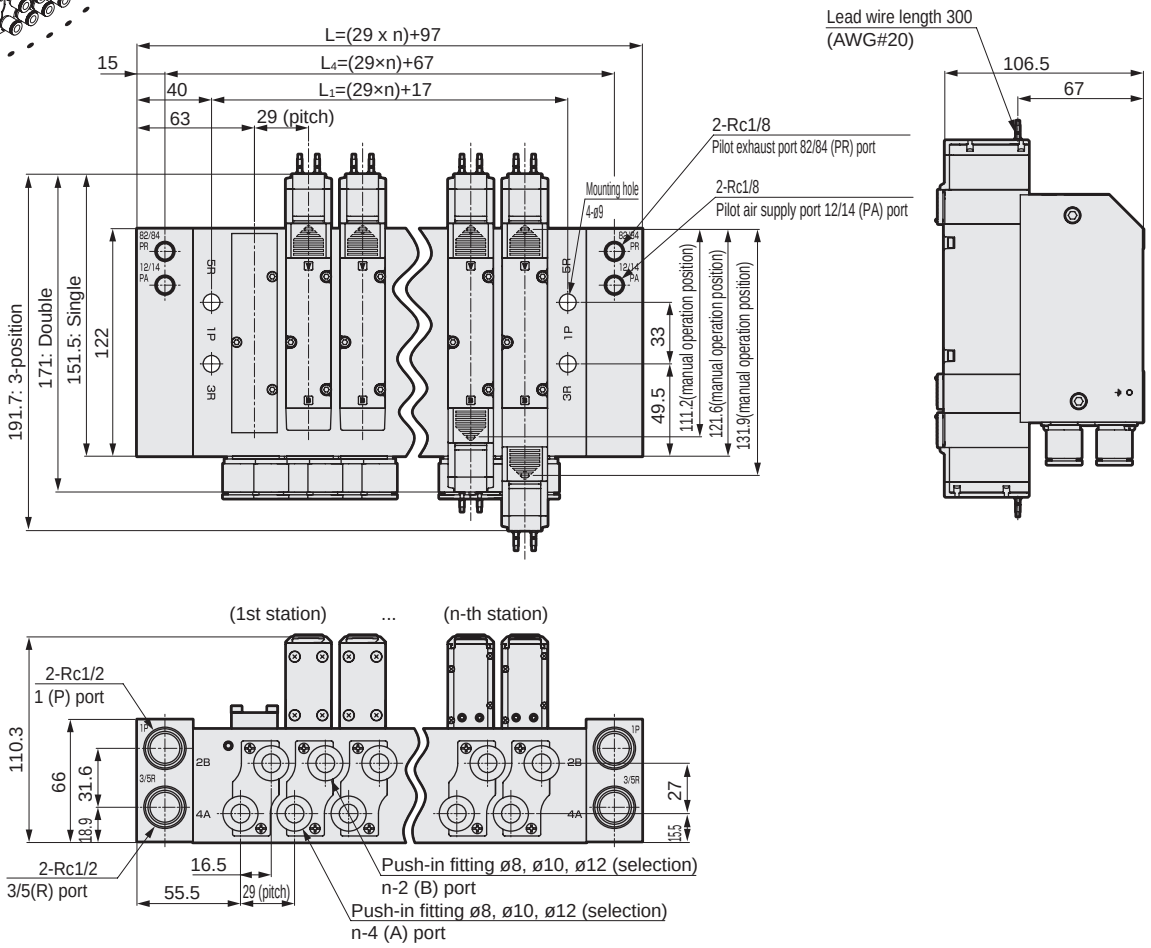

● External pilot (K)
Supply and exhaust block (Q)
Rc1/4, Rc3/8, Rc1/2 female thread (08, 10, 15)

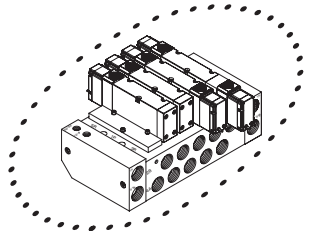

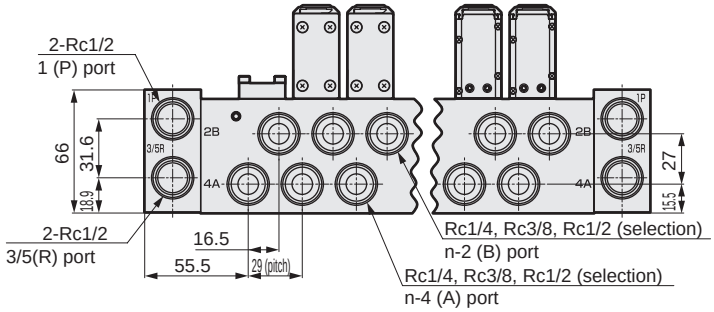

Station No.	2	3	4	5	6	7	8	9	10	11	12
L	155	184	213	242	271	300	329	358	387	416	445
L_1	75	104	133	162	191	220	249	278	307	336	365
L_4	125	154	183	212	241	270	299	328	357	386	415

Dimensions

● External pilot (K)
Supply and exhaust block (Q)
E-connector (E)

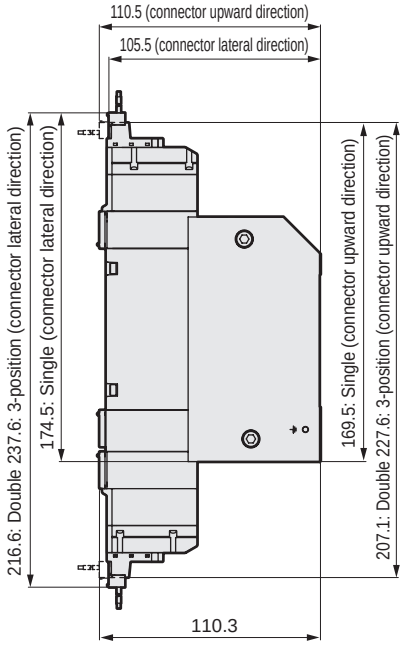

● External pilot (K)
Supply and exhaust block (Q)
EJ type connector (E**J)

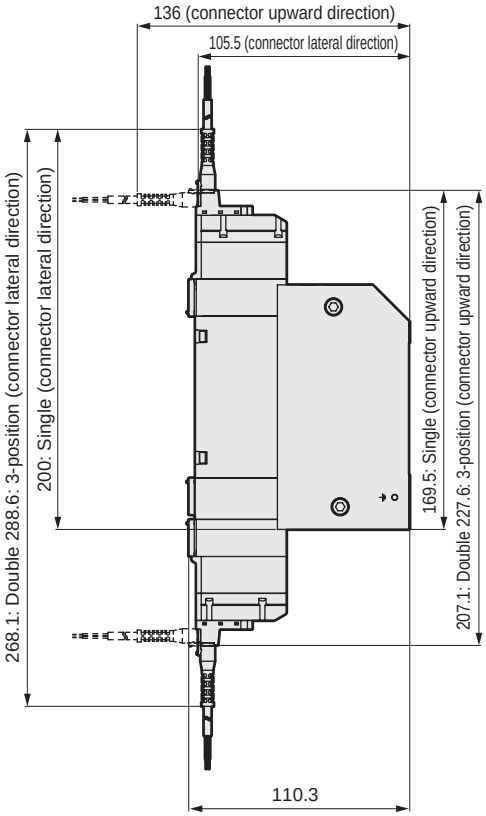

● External pilot (K)
Supply and exhaust block (Q)
DIN terminal box (B)

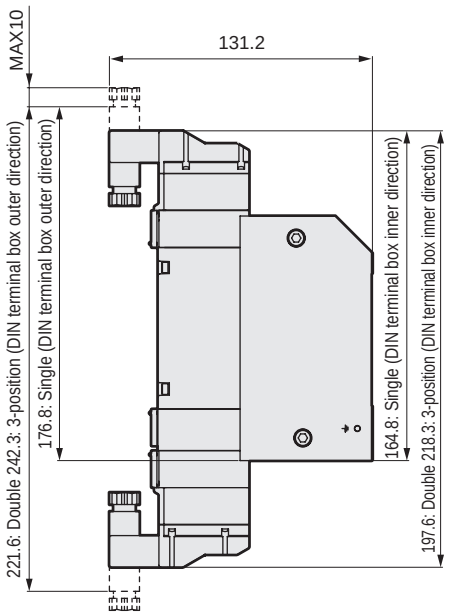

Note: DIN terminal box assembly is shipped facing inward.

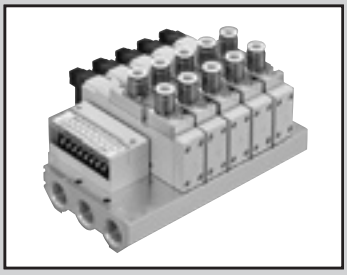

Reduced wiring manifold
(Common terminal block/D sub-connector/flat cable connector)
Body piping
Direct mount

M4GA4-T* Series

* Refer to page 770 for serial transmission.

● Cylinder bore size: ø100 to ø140

Manifold common specifications

Item		Description
Manifold		Reduced wiring integrated base
Mounting method		Direct mount
Supply and exhaust method		Common supply/common exhaust
Pilot exhaust method	Internal pilot	Main valve/pilot valve common exhaust (Pilot exhaust check valve built-in)
	External pilot	Main valve/pilot valve individual exhaust
Piping direction		Valve top direction
Valve and operation		Pilot operated soft spool valve
Working fluid		Compressed air
Max. working pressure MPa		0.7 (≈100 psi, 7 bar)
Min. working pressure MPa		0.2 (≈29 psi, 2 bar) (*3)
Proof pressure MPa		1.05 (≈150 psi, 10.5 bar)
Ambient temperature °C		-5 (23°F) to 55 (131°F) (no freezing)
Fluid temperature °C		5 (41°F) to 55 (131°F)
Manual override		Non-locking/locking common
Lubrication (*1)		Not required
Degree of protection (*2)		Dust-proof (IP40 equivalent)
Vibration resistance m/s^2		50 or less
Shock resistance m/s^2		300 or less
Atmosphere		Cannot be used in corrosive gas environments

*1: Use turbine oil Class 1 ISO VG32 for lubrication. Excessive or intermittent lubrication results in unstable operation.
*2: Avoid water drops or oil, etc., during use.
*3: The working pressure range is 0 to 0.7 MPa when the external pilot (option code: K) is selected. Set the external pilot pressure between 0.2 and 0.7 MPa.

Electrical specifications

Item		Description
Rated voltage V	DC	12, 24
Voltage fluctuation range		±10%
Holding current A	12 VDC	0.083
	24 VDC	0.042
Power consumption W	12 VDC	1.0
	24 VDC	1.0
Thermal class		B
Surge suppressor		Varistor
Indicator		LED

JIS symbol

● 5-port valve

2-position single

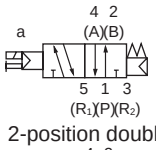

2-position double

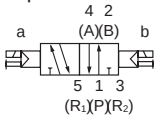

3-position all ports closed

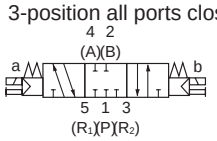

3-position A/B/R connection

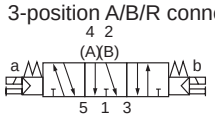

3-position P/A/B connection

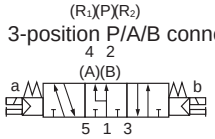

Individual specifications

Item			M4GA4
			Direct mount
Max. station No.			11 stations
Port size	A/B port		Push-in fitting ø8, ø10, ø12 Rc3/8, G3/8, NPT3/8
	P/R1/R2 port		Rc1/2, G1/2, NPT1/2
Manifold base		Standard	150n+530
Weight calculation formula (n: station No.) g		External pilot	379n+1122

For 5 or more manifold station No., use ports on both side for air supply and exhaust.
The manifold base weight is the value for screw specifications.
Note that the max. station number of the manifold is also limited by the max. number of solenoids for each of the following wiring specifications.

Performance/characteristics by model

Item			M4GA4	
			ON	OFF
Response time ms	2-position	Single	40(40)	40(52)
		Double	40(52)	40(52)
	3-position	ABR connection	60(72)	60(72)

Values with lamp/surge suppressor are shown. The response times are values with working pressure of 0.5 MPa at 20°C, without lubrication. They depend on the pressure and the lubricant quality. Values in ( ) are for AC.

Flow characteristics

Model No.	Solenoid position		P → A/B		A/B→R1/R2	
			C[dm³/(s·bar)]	b	C[dm³/(s·bar)]	b
M4GA4	2-position		7.3	0.12	9.0	0.17
	3-position	All ports closed	6.4	0.15	8.2	0.22
		ABR connection	6.4	0.16	9.3	0.19
		PAB connection	8.0	0.08	8.3	0.22

*1: Effective cross-sectional area S and sonic conductance C are converted as S ≈ 5.0 × C.

Wiring specifications

Item	T10 □ Common term. block	T11 □ Common term. block	T30 □ D sub-connector	T50 □ Flat cable 20-pin	T51 □ Flat cable 20-pin	T52 □ Flat cable 10-pin	T53 □ Flat cable 26-pin
Connector and terminal block specifications	M3 thread tightening 18 terminals	Clamping 26 terminals	D sub-connectors 25 terminals	MIL-C-83503 standard compliant pressure welding socket 20-pin	MIL-C-83503 standard compliant pressure welding socket 20-pin	MIL-C-83503 standard compliant pressure welding socket 10-pin	MIL-C-83503 standard compliant pressure welding socket 26-pin
Max. number of solenoids	16 points	24 points	24 points	16 points	18 points	8 points	24 points
Manifold internal wiring	Details on pages 816 to 823						
Wiring block position Blank: Left side R: Right side	**Left side: T □** 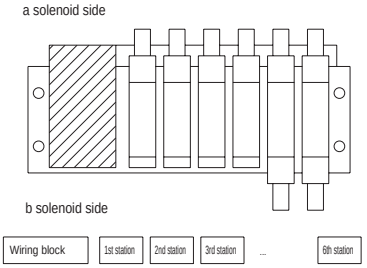				**Right side: T □ R** 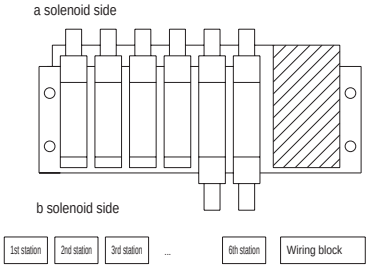		
Array method Blank: Standard sequential W: Double wiring	**(Ex.) In the case of T50 □** 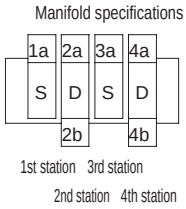 Standard wiring (sequential):Blank <table><tr><td>Connector pin No.</td><td>1</td><td>2</td><td>3</td><td>4</td><td>5</td><td>6</td></tr><tr><td>Valve solenoid No.</td><td>1a</td><td>2a</td><td>2b</td><td>3a</td><td>4a</td><td>4b</td></tr></table> Double wiring: W <table><tr><td>Connector pin No.</td><td>1</td><td>2</td><td>3</td><td>4</td><td>5</td><td>6</td><td>7</td><td>8</td></tr><tr><td>Valve solenoid No.</td><td>1a</td><td>Blank</td><td>2a</td><td>2b</td><td>3a</td><td>Blank</td><td>4a</td><td>4b</td></tr></table>						

Coolant proof specifications

Can be selected with "How to order" Item Ⓕ option "A" on page 762.

Specifications for rechargeable battery

(Catalog No. CC-1226A)

● For use in the rechargeable battery manufacturing process, materials used for air path and sliding section are limited

** - Voltage - **P4**

CE marking specifications

** - Voltage - **ST**

- Standard voltage of 24 VDC or less is CE marking-compatible even if the model No. is not indicated with "ST".

M4GA4-T* Series

Reduced wiring manifold; body piping

How to order

Manifold model No.

M 4GA4 1 0 - 10 - T10 W A - 3 - 3

Discrete valve for mounting base

4GA4 1 9 - 10 - A2N A — 3

- Ⓐ Model No.
- Ⓑ Solenoid position
- A2N indicates the A type (downward) connector, with lamp/surge suppressor and without lead wire.
- Ⓒ Port size
- Ⓓ Reduced wiring connection
- Ⓔ Terminal connector pin array
- Ⓕ Option
- Ⓖ Station No.
- Ⓗ Voltage

●Refer to page 819 for the model No. of cables with D sub-connector.
●Refer to page 815 for the model No. for cables for flat cable connector.

* Be sure to fill in the "Manifold specifications sheet" (pages 811 and 812).

Code	Description		Ⓐ Model No. 4GA4
Ⓑ Solenoid position			
1	2-position single		●
2	2-position double		●
3	3-position all ports closed		●
4	3-position ABR connection		●
5	3-position PAB connection		●
8	Mix manifold (when there are multiple solenoid positions)		●
Ⓒ Port size			
Port	A/B Port		P/R1/R2 port Rc1/2
C8	ø8 Push-in fitting		●
C10	ø10 Push-in fitting		●
C12	ø12 Push-in fitting		●
CX	Push-in fitting mix	(*1)	●
10	Rc3/8		●
10G	G3/8		● (*2)
10N	NPT3/8		● (*3)
Ⓓ Reduced wiring (lamp and surge suppressor provided as standard)			
T10	Common terminal block (M3 thread)	Left-side spec	●
T10R		Right-side spec	●
T11	Common terminal block (clamping)	Left-side spec	●
T11R		Right-side spec	●
T30	D sub-connector	Left-side spec	●
T30R		Right-side spec	●
T50	20-pin flat cable connector (with power supply terminal)	Left-side spec	●
T50R		Right-side spec	●
T51	20-pin flat cable connector (without power supply terminal)	Left-side spec	●
T51R		Right-side spec	●
T52	10-pin flat cable connector (without power supply terminal)	Left-side spec	●
T52R		Right-side spec	●
T53	26-pin flat cable connector (without power supply terminal)	Left-side spec	●
T53R		Right-side spec	●
Ⓔ Terminal/connector pin array			
Blank	Standard wiring	(*4)	●
W	Double wiring	(*4) (*5)	●
Ⓕ Option			
Blank	None		●
K	External pilot	(*6) (*7)	●
A	Coolant proof		●
F	A/B port filter integrated (P-port: Standard)		●
Z1	Air supply spacer	(*8) (*9)	●
Z3	Exhaust spacer	(*8) (*9)	●
Q	Supply and exhaust block	(*9)	●
Ⓖ Station No.			
2	2 stations		●
to	to		
11	11 stations		
Ⓗ Voltage			
3	24 VDC		●
4	12 VDC		●

⚠ Precautions for model No. selection

*1 : The push-in fitting cannot be mixed with the discrete valve's 4(A) or 2(B) port.
*2 : P/R port is G1/2.
*3 : P/R port is NPT1/2.
*4 : Blank ...The wiring will be based on the type of valve used.
W .....All wired for double solenoid regardless of the type of valve used.
*5 : When changing from a discrete valve for W wiring specifications to a double or 3-position valve, the A-connector socket assembly needs to be purchased separately.
*6 : Consult with CKD when using a vacuum with the external pilot (K).
*7 : Refer to page 765 for dimensions of the external pilot (K).
*8 : Specify the spacer mounting position and quantity in manifold specifications sheet. Refer to pages 796 and 797 for details.
*9 : Cannot be selected with discrete valve for integrated base.

Manifold components explanation and parts list

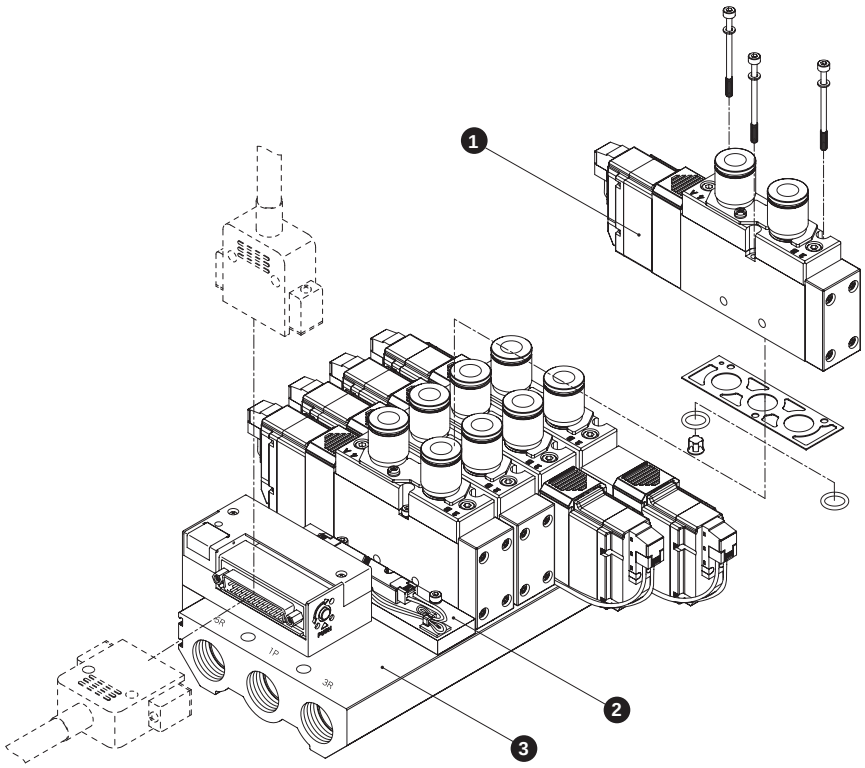

Main parts list

No.	Component name	Model No.	Description	Remarks
1	Discrete valve for mounting base	4GA4□9- Port size -A2N Option - Voltage Solenoid position	Discrete valve Gasket Mounting screws 3 O-ring 2 Check valve 2 (1)	Size: 4GA4 / M3; Tightening torque (N·m): 1.7
2	Masking plate	4GA4-MPC	Masking plate for reduced wiring Gasket Mounting screws 3 O-ring 2 Check valve 2	
3	Manifold base assembly	M4GA4- Port size - Reduced wiring connection Option - Station No.	Manifold base Wiring block	Port size: 00 / Rc1/2; 00G / G1/2; 00N / NPT1/2

( ) applies when 4GA419 is selected.

Parts list

No.	Part name	Model No.
-	A-connector socket assembly	4G4-SOCKET-ASSY-A□□- Row No. Blank: Left side, R: Right side A: aSOL side, B: bSOL side 2 to 11: Specify the position of the valve to be connected
-	Silencer (for Rc1/2)	SLW-15A
-	Cartridge push-in fitting and related parts	4G4-JOINT-C8 4G4-JOINT-C10 4G4-JOINT-C12

Dimensions

M4GA4

* Figure shows T50. Refer to pages 768 to 769 for detailed wiring block dimensions.

● Reduced wiring left side type (T10/T11/T30/T50/T51/T52/T53)

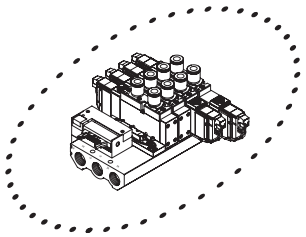

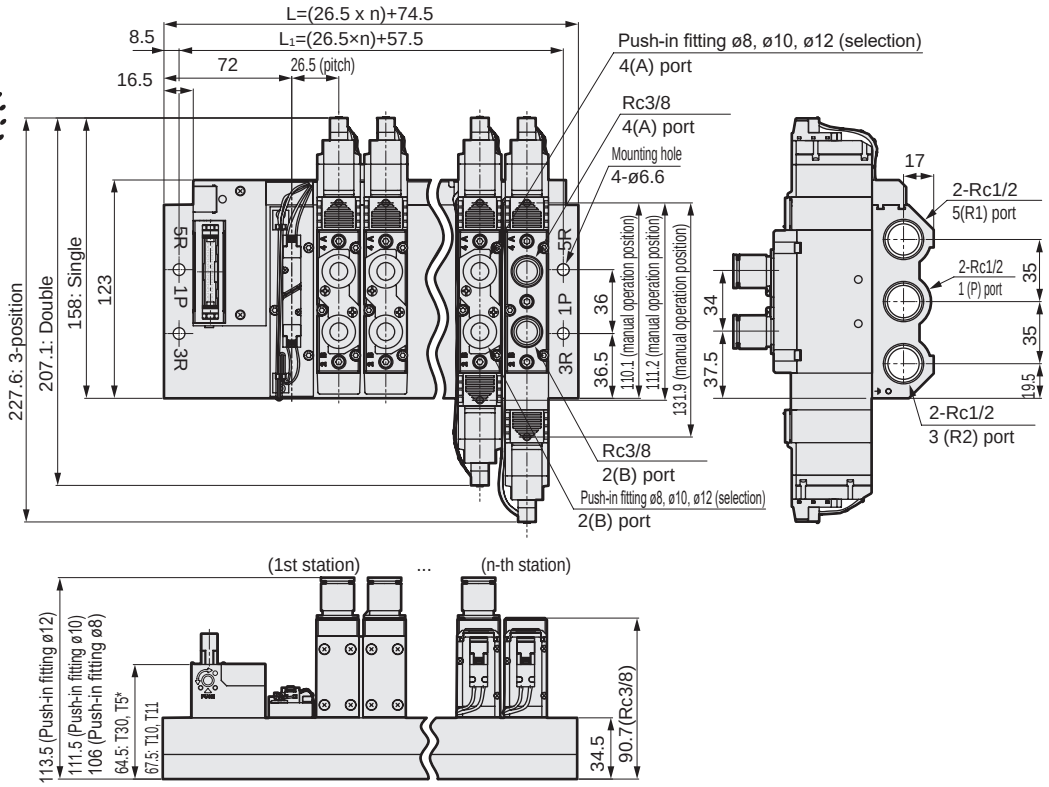

● Reduced wiring right side type (T10R/T11R/T30R/T50R/T51R/T52R/T53R)

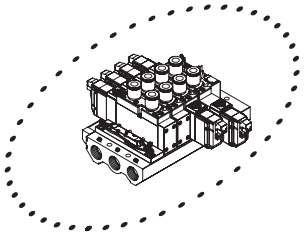

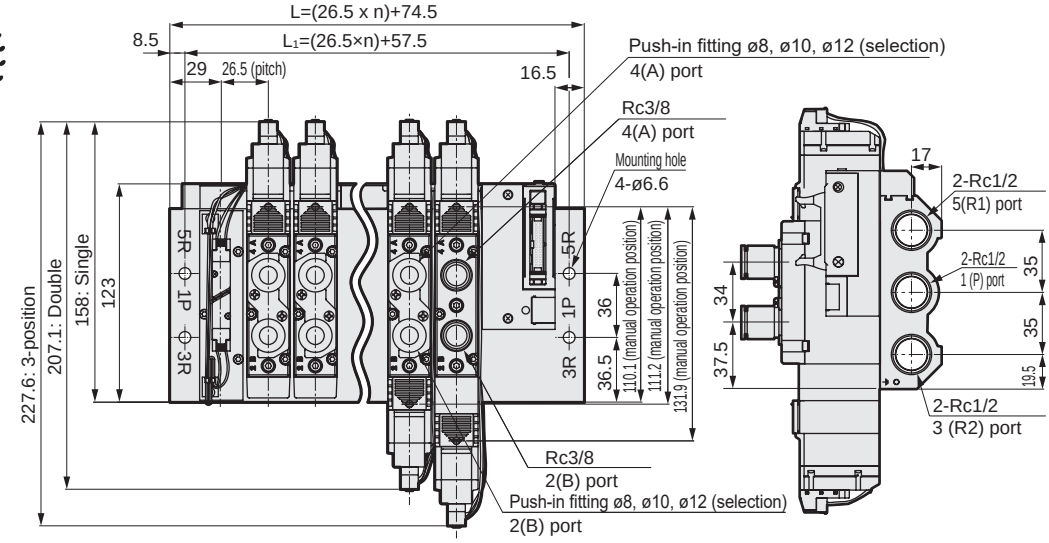

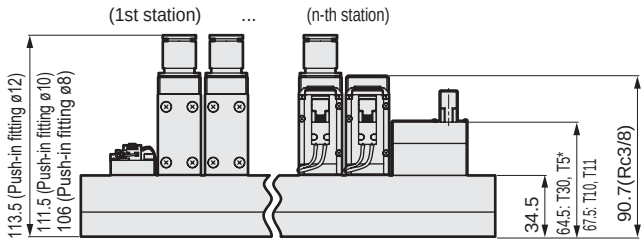

Station No.	2	3	4	5	6	7	8	9	10	11
L	127.5	154	180.5	207	233.5	260	286.5	313	339.5	366
L_1	110.5	137	163.5	190	216.5	243	269.5	296	322.5	349

Dimensions

M4GA4

* Figure shows T30. Refer to pages 768 to 769 for detailed wiring block dimensions.

● Reduced wiring left side type (T10/T11/T30/T50/T51/T52/T53)
External pilot (K)

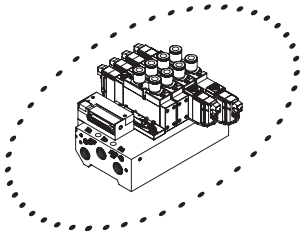

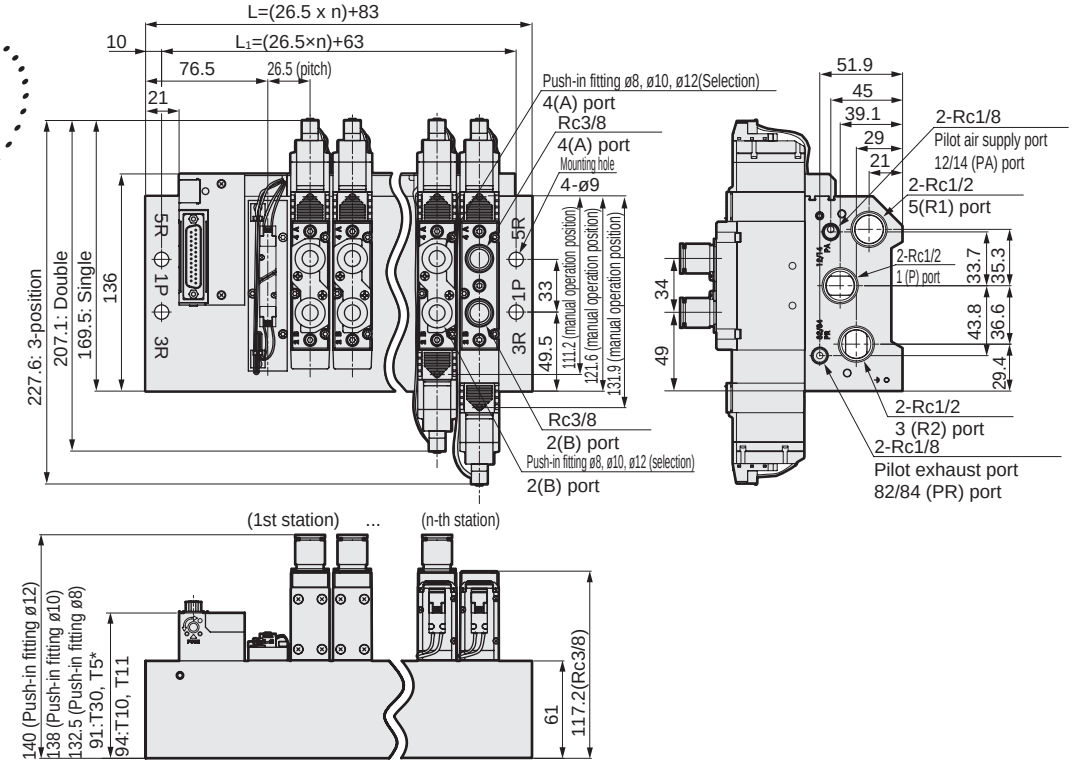

● Reduced wiring right side type (T10R/T11R/T30R/T50R/T51R/T52R/T53R)
External pilot (K)

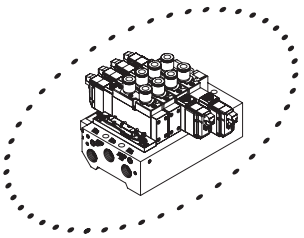

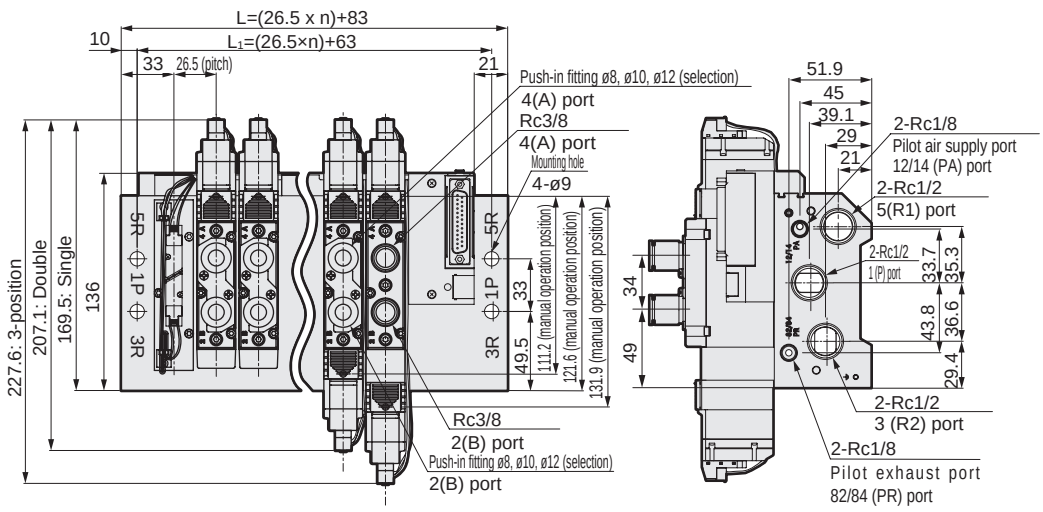

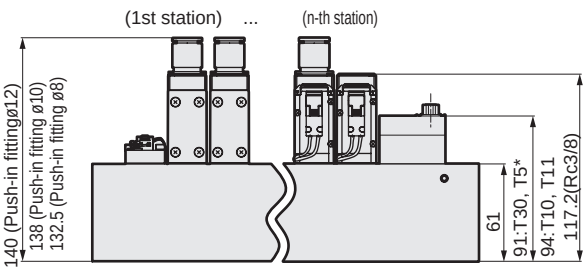

Station No.	2	3	4	5	6	7	8	9	10	11
L	136	162.5	189	215.5	242	268.5	295	321.5	348	374.5
L_1	116	142.5	169	195.5	222	248.5	275	301.5	328	354.5

Dimensions

M4GA4

* Figure shows T10. Refer to pages 768 to 769 for detailed wiring block dimensions.

● Reduced wiring left side type (T10/T11/T30/T50/T51/T52/T53)
Supply and exhaust block (Q)

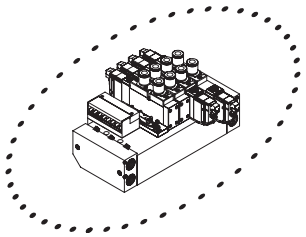

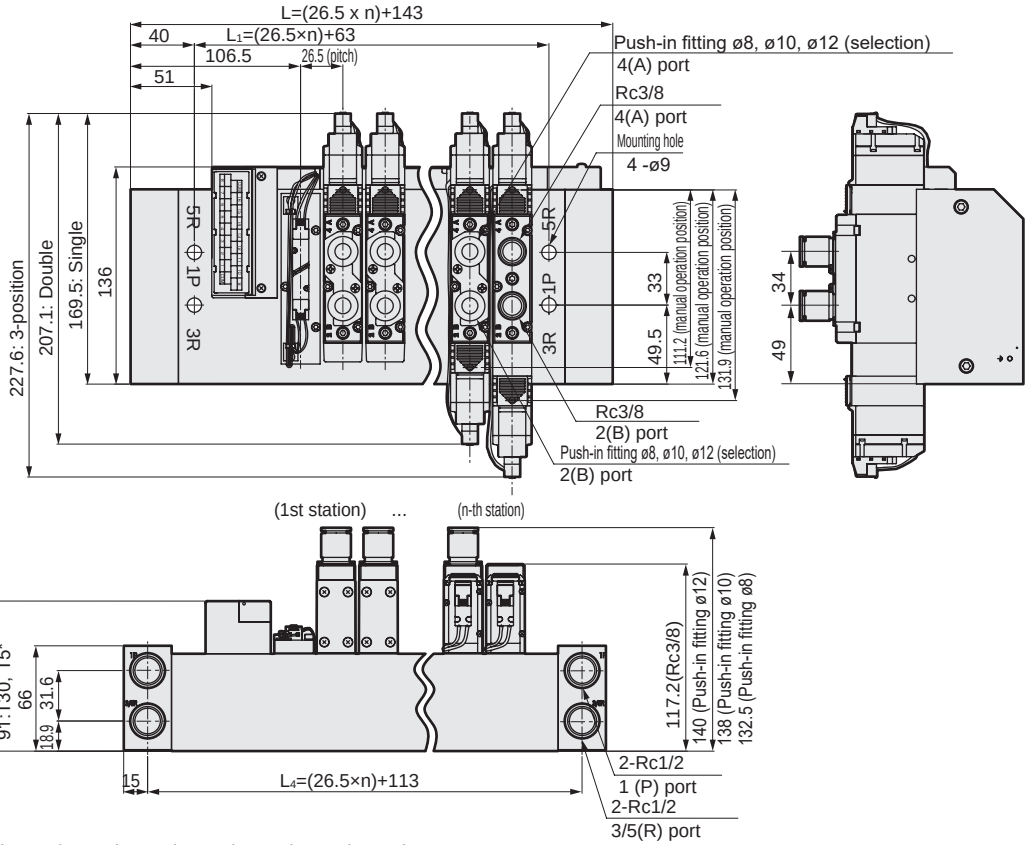

● Reduced wiring right side type (T10R/T11R/T30R/T50R/T51R/T52R/T53R)

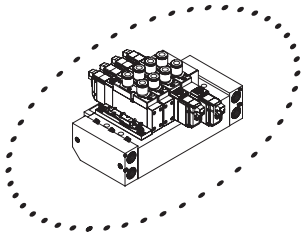

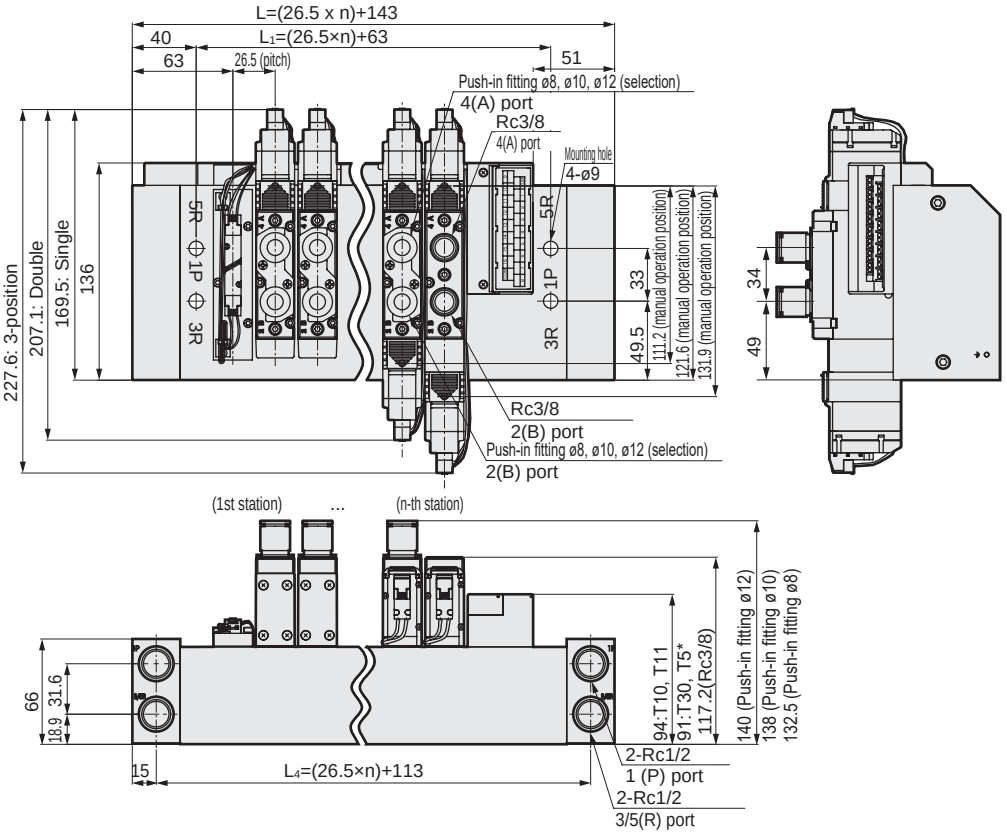

Station No.	2	3	4	5	6	7	8	9	10	11
L	196	222.5	249	275.5	302	328.5	355	381.5	408	434.5
L_1	116	142.5	169	195.5	222	248.5	275	301.5	328	354.5
L_4	166	192.5	219	245.5	272	298.5	325	351.5	378	404.5

Dimensions

M4GA4

* Figure shows T10. Refer to pages 768 to 769 for detailed wiring block dimensions.

● Reduced wiring left side type (T10/T11/T30/T50/T51/T52/T53)
External pilot (K)
Supply and exhaust block (Q)

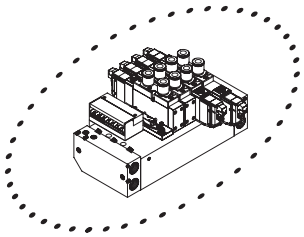

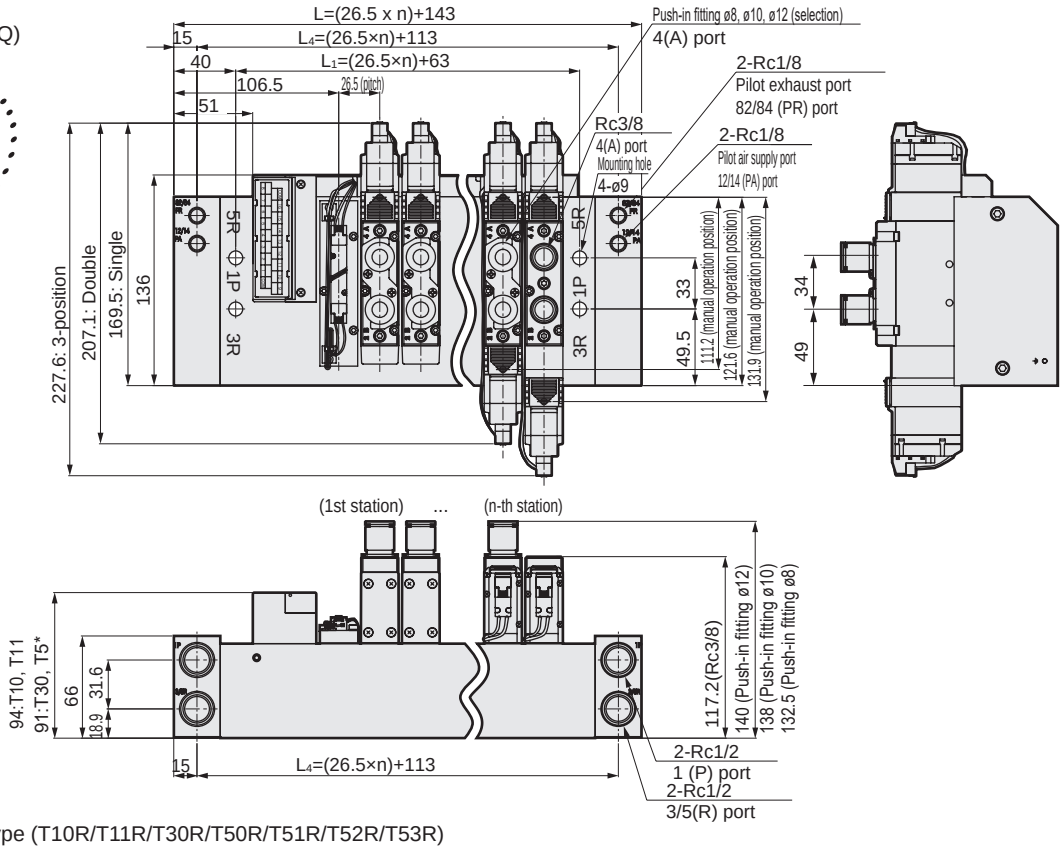

● Reduced wiring right side type (T10R/T11R/T30R/T50R/T51R/T52R/T53R)
External pilot (K)
Supply and exhaust block (Q)

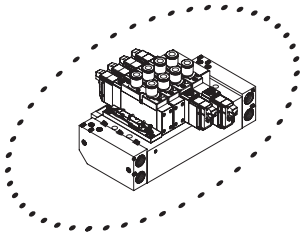

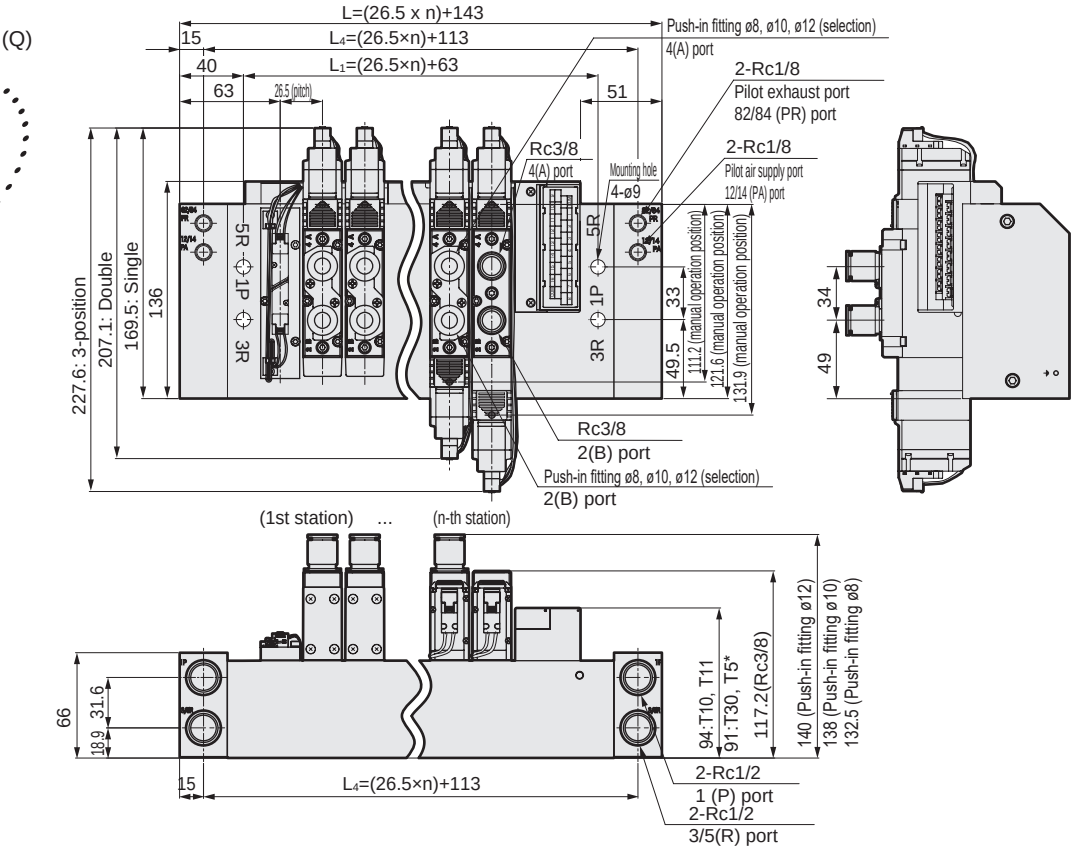

Station No.	2	3	4	5	6	7	8	9	10	11
L	196	222.5	249	275.5	302	328.5	355	381.5	408	434.5
L_1	116	142.5	169	195.5	222	248.5	275	301.5	328	354.5
L_4	166	192.5	219	245.5	272	298.5	325	351.5	378	404.5

Wiring block part: Dimensions

● Common terminal block (M3 thread) T10

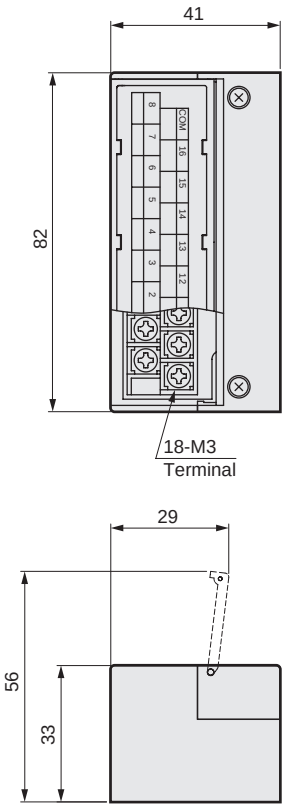

● Common terminal block (clamping) T11

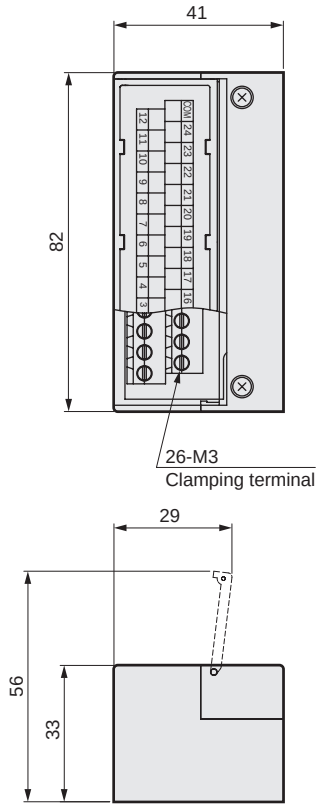

● D sub-connector T30

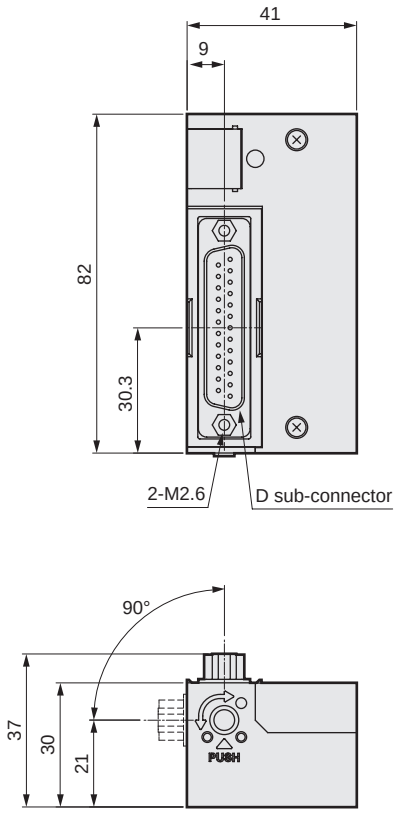

● 20-pin flat cable connector (with power supply terminal) T50

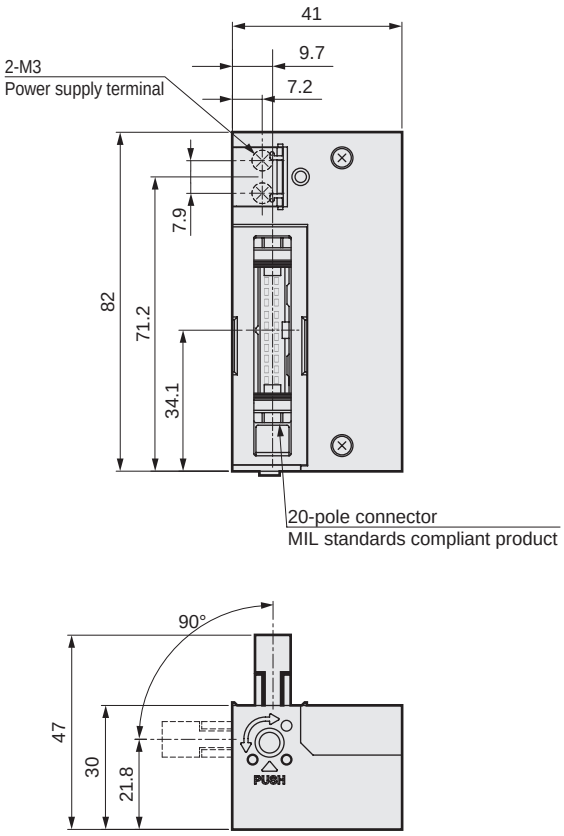

Wiring block part: Dimensions

● 20-pin flat cable connector (without power supply terminal)
T51

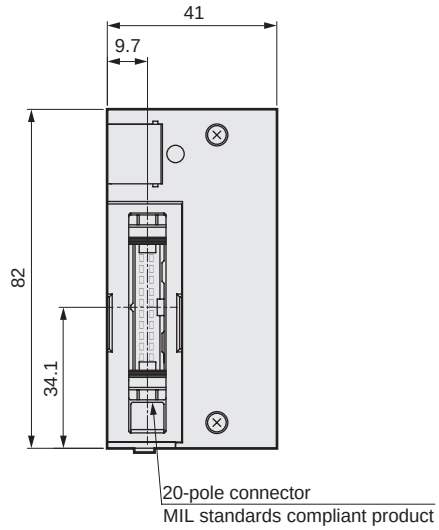

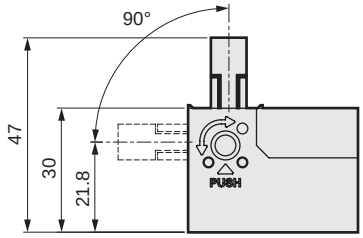

● 10-pin flat cable connector (without power supply terminal)
T52

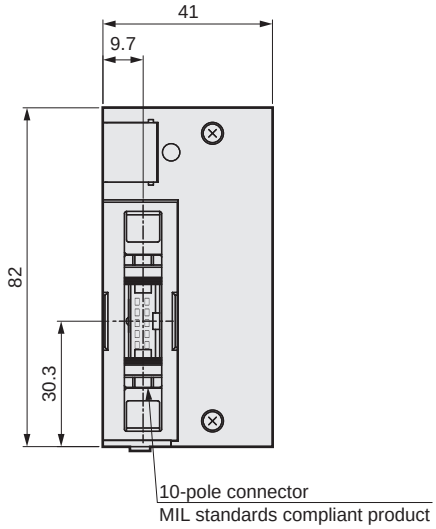

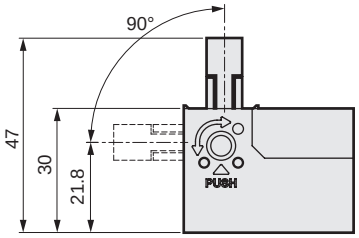

● 26-pin flat cable connector (without power supply terminal)
T53

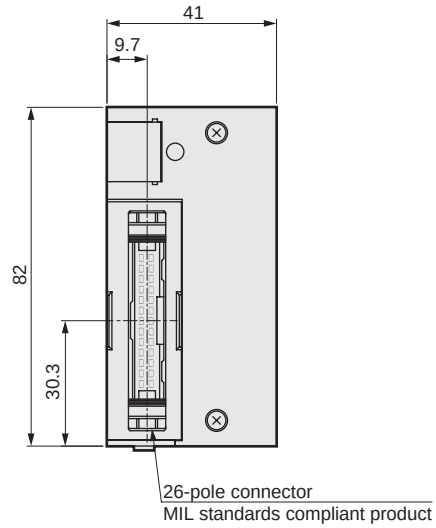

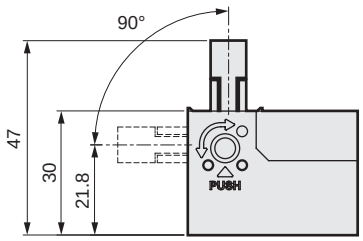

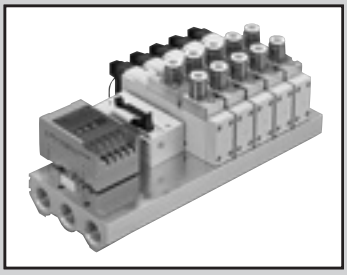

Reduced wiring manifold (serial transmission)
Body piping
Direct mount

M4GA4-T6G1 Series

● Cylinder bore size: ø100 to ø140

RoHS

Manifold common specifications

Item		Description
Manifold		Serial transmission integrated base
Mounting method		Direct mount
Supply and exhaust method		Common supply/common exhaust
Pilot exhaust method	Internal pilot	Main valve/pilot valve common exhaust (Pilot exhaust check valve built-in)
	External pilot	Main valve/pilot valve individual exhaust
Piping direction		Valve top direction
Valve and operation		Pilot operated soft spool valve
Working fluid		Compressed air
Max. working pressure MPa		0.7 (≈100 psi, 7 bar)
Min. working pressure MPa		0.2 (≈29 psi, 2 bar) (*3)
Proof pressure MPa		1.05 (≈150 psi, 10.5 bar)
Ambient temperature °C		-5 (23°F) to 55 (131°F) (no freezing)
Fluid temperature °C		5 (41°F) to 55 (131°F)
Manual override		Non-locking/locking common type
Lubrication (*1)		Not required
Degree of protection (*2)		Dust-proof (IP40 equivalent)
Vibration resistance m/s^2		50 or less
Shock resistance m/s^2		300 or less
Atmosphere		Cannot be used in corrosive gas environments

*1: Use turbine oil Class 1 ISO VG32 for lubrication. Excessive or intermittent lubrication results in unstable operation.
*2: Avoid water drops or oil, etc., during use.
*3: The working pressure range is 0 to 0.7 MPa when the external pilot (option code: K) is selected. Set the external pilot pressure between 0.2 and 0.7 MPa.

Electrical specifications

Item		Description
Rated voltage V	DC	24
Voltage fluctuation range		±10%
Holding current A		0.042
Power consumption W		1.0
Thermal class		B
Surge suppressor		Varistor
Indicator		LED

JIS symbol

● 5-port valve

2-position single

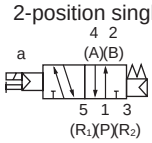

2-position double

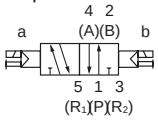

3-position all ports closed

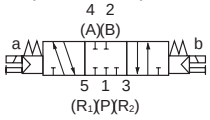

3-position A/B/R connection

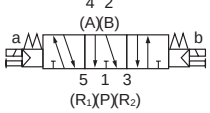

3-position P/A/B connection

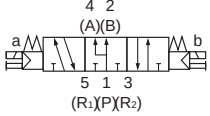

Individual specifications

Item			M4GA4
			Direct mount
Max. station No.			8 stations
Port size	A/B port		Push-in fitting ø8, ø10, ø12 Rc3/8, G3/8, NPT3/8
	P/R1/R2 port		Rc1/2, G1/2, NPT1/2
Manifold base		Standard	150n+1016
Weight calculation formula (n: station No.) g		External pilot	379n+2391

For 5 and over manifold station No., use ports on both side for air supply and exhaust.
The manifold base weight is the value for screw specifications.

Performance/characteristics by model

Item			M4GA4	
			ON	OFF
Response time ms	2-position	Single	40(40)	40(52)
		Double	40(52)	40(52)
	3-position	ABR connection	60(72)	60(72)

Values with lamp/surge suppressor are shown. The response times are values with working pressure of 0.5 MPa at 20°C, without lubrication.
They depend on the pressure and the lubricant quality. Values in ( ) are for AC.

Flow characteristics

Model No.	Solenoid position		P→A/B		A/B→R1/R2	
			C[dm³/(s·bar)]	b	C[dm³/(s·bar)]	b
M4GA4	2-position		7.3	0.12	9.0	0.17
	3-position	All ports closed	6.4	0.15	8.2	0.22
		ABR connection	6.4	0.16	9.3	0.19
		PAB connection	8.0	0.08	8.3	0.22

Note: Effective cross-sectional area S and sonic conductance C are converted as S ≈ 5.0 x C.

Serial transmission device unit specifications

Item		T6G1
Network name		CC-Link ver1.10
Power supply voltage	Unit side	24 VDC ±10%
	Valve side	24 VDC +10%, -5%
	Communication side	-
Current consumption	Unit side	100 mA or less (when all output points are ON)
	Valve side	15 mA or less (when all output points are OFF)
	Communication side	-
Output points		16 points
Occupied number		1 station
Operation display		LED (power supply and communication status)

Coolant proof specifications

Can be selected with "How to order" Item Ⓕ option "A" on page 772.

Specifications for rechargeable battery (Catalog No. CC-1226A)

● For use in the rechargeable battery manufacturing process, materials used for air path and sliding section are limited

** - Voltage - **P4**

M4GA4-T6G1 Series

Reduced wiring manifold; body piping; serial transmission

How to order

Manifold model No.

M 4GA4 1 0 - 10 - T6G1 W A - 3 - 3

Discrete valve for mounting base

4GA4 1 9 - 10 - A2N A — 3

- Ⓐ Model No.
- Ⓑ Solenoid position
- A2N indicates the A type (downward) connector, with lamp/surge suppressor and without lead wire.
- Ⓒ Port size
- Ⓓ Serial transmission
- Ⓔ Terminal/connector pin array
- Ⓕ Option
- Ⓖ Station No.
- Ⓗ Voltage

* Be sure to fill in the "Manifold specifications sheet" (page 813).

Code	Description	Ⓐ Model No. 4GA4
Ⓑ Solenoid position		
1	2-position single	●
2	2-position double	●
3	3-position all ports closed	●
4	3-position ABR connection	●
5	3-position PAB connection	●
8	Mix manifold (when there are multiple solenoid positions)	●
Ⓒ Port size		
Port	A/B Port	P/R1/R2 port Rc1/2
C8	ø8 Push-in fitting	●
C10	ø10 Push-in fitting	●
C12	ø12 Push-in fitting	●
CX	Push-in fitting mix (*1)	●
10	Rc3/8	●
10G	G3/8	● (*2)
10N	NPT3/8	● (*3)
Ⓓ Serial transmission (lamp/surge suppressor provided as standard)		
T6G1	CC-Link 16 points	●
Ⓔ Terminal/connector pin array		
Blank	Standard wiring (*4)	●
W	Double wiring (*4) (*5)	●
Ⓕ Option		
Blank	None	●
K	External pilot (*6) (*7)	●
A	Coolant proof	●
F	A/B port filter integrated (P-port: Standard)	●
Z1	Air supply spacer (*8) (*9)	●
Z3	Exhaust spacer (*8) (*9)	●
Q	Supply and exhaust block (*9)	●
Ⓖ Station No.		
2	2 stations	●
to	to	
8	8 stations	
Ⓗ Voltage		
3	24 VDC	●

Precautions for model No. selection

*1 : The push-in fitting cannot be mixed with the discrete valve's 4(A) or 2(B) port.
*2 : P/R port is G1/2.
*3 : P/R port is NPT1/2.
*4 : Blank...The wiring will be based on the type of valve used.
W .....All wired for double solenoid regardless of the type of valve used.
*5 : When changing from a discrete valve for W wiring specifications to a double or 3-position valve, the A-connector socket assembly needs to be purchased separately.
*6 : Consult with CKD when using a vacuum with the external pilot (K).
*7 : Refer to pages 774 and 775 for dimensions of the external pilot (K).
*8 : Specify the spacer mounting position and quantity in manifold specifications sheet. Refer to pages 796 and 797 for details.
*9 : Cannot be selected with discrete valve for integrated base.

Manifold components explanation and parts list

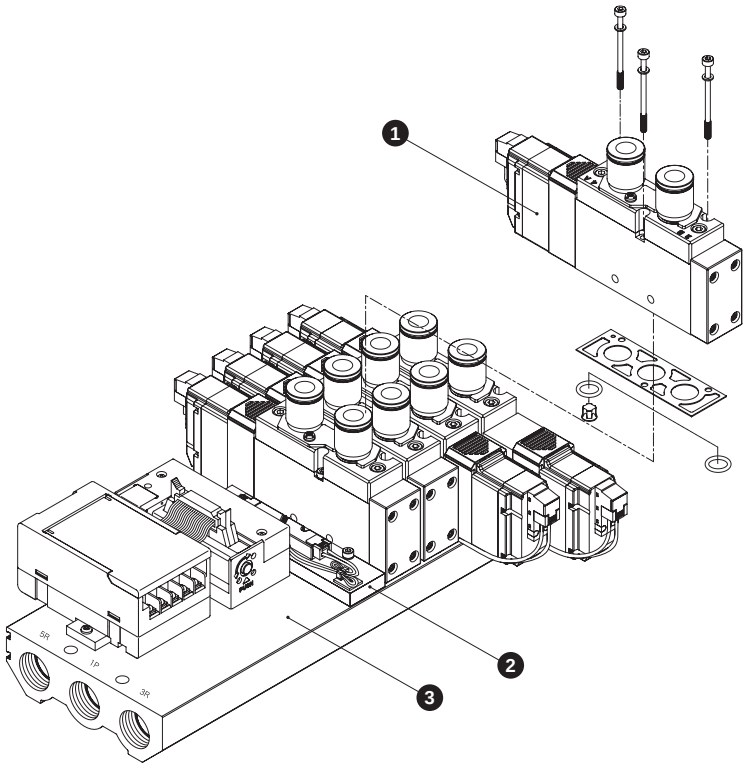

Main parts list

No.	Component name	Model No.	Content	Remarks
1	Discrete valve for mounting base	4GA4□9- Port size -A2N Option - Voltage Solenoid position	Discrete valve Gasket Mounting screws 3 O-ring 2 Check valve 2 (1)	Size: 4GA4 / M3; Tightening torque (N·m): 1.7
2	Masking plate	4GA4-MPC	Masking plate for reduced wiring Gasket Mounting screws 3 O-ring 2 Check valve 2	
3	Manifold base assembly	M4GA4- Port size -T6G1 Option - Station No.	Manifold base Wiring block	Port size: 00 Rc1/2; 00G G1/2; 00N NPT1/2

( ) applies when 4GA419 is selected.

Parts list

No.	Part name	Model No.
-	A-connector socket assembly	4G4-SOCKET-ASSY-A□□- Row No. Blank: Left side, R: Right side A: aSOL side, B: bSOL side 2 to 8: Specify the position of the valve to be connected
-	Silencer (for Rc1/2)	SLW-15A
-	Cartridge push-in fitting and related parts	4G4-JOINT-C8 4G4-JOINT-C10 4G4-JOINT-C12

Dimensions

M4GA4

● Serial transmission (T6G1)

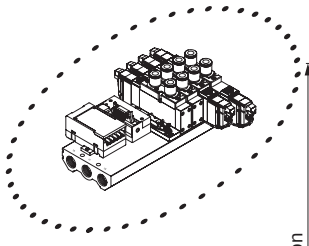

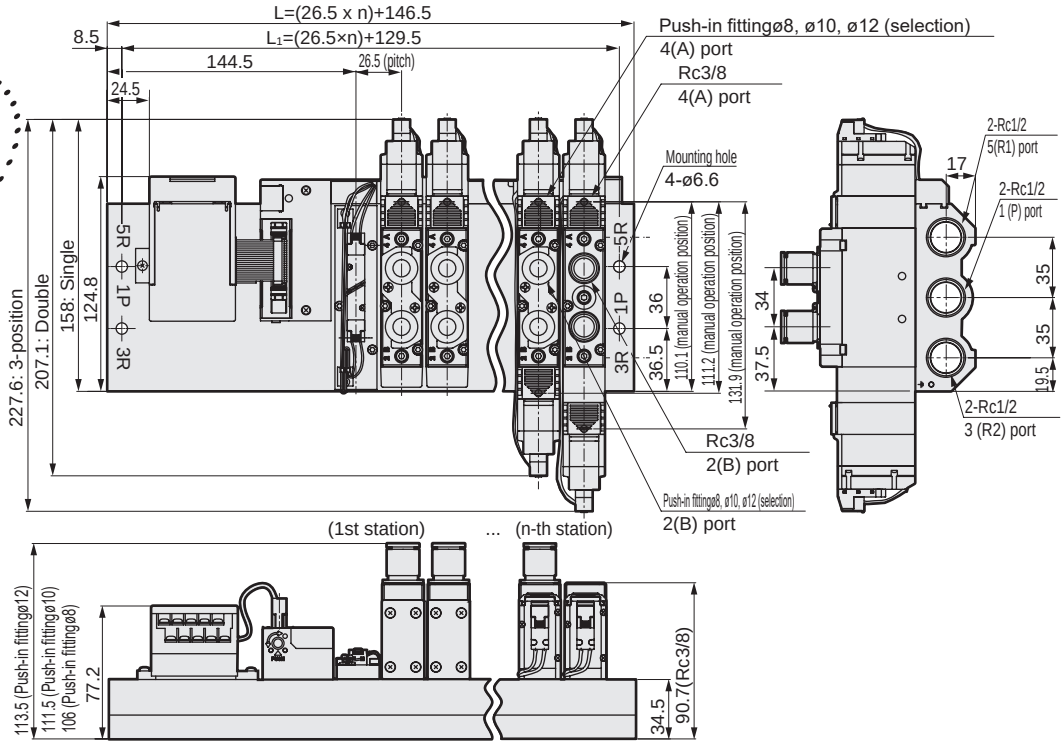

Station No.	2	3	4	5	6	7	8
L	199.5	226	252.5	279	305.5	332	358.5
L_1	182.5	209	235.5	262	288.5	315	341.5

● Serial transmission (T6G1)
External pilot (K)

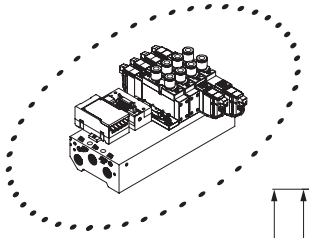

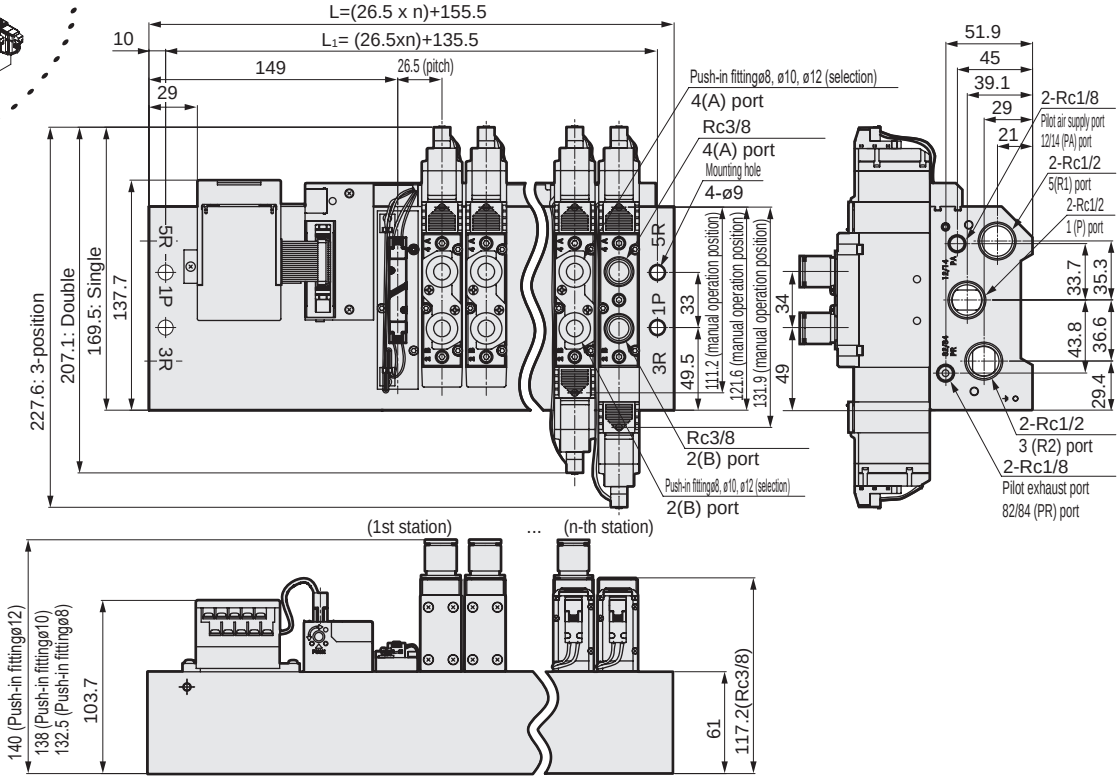

Station No.	2	3	4	5	6	7	8
L	208.5	235	261.5	288	314.5	341	367.5
L_1	188.5	215	241.5	268	294.5	321	347.5

Dimensions

M4GA4

● Serial transmission (T6G1)
Supply and exhaust block (Q)

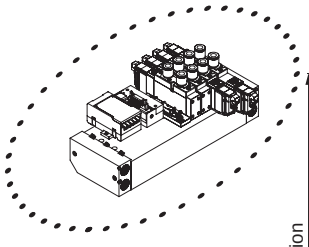

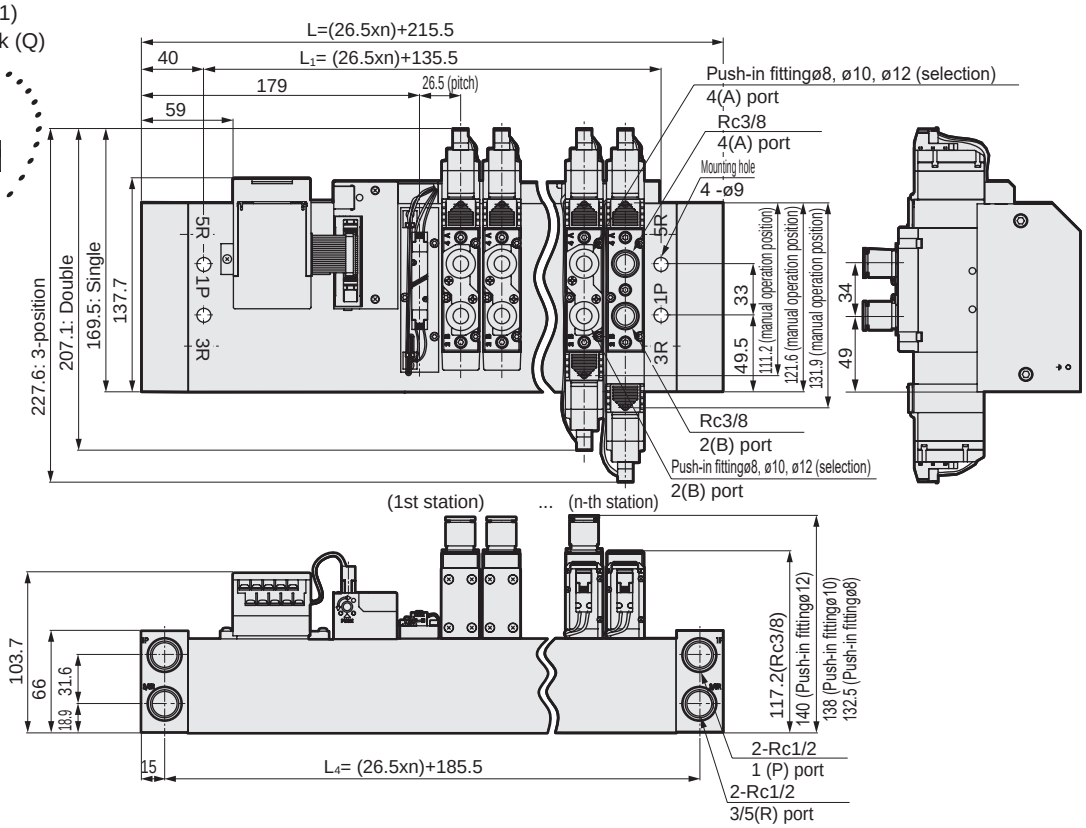

● Serial transmission (T6G1)
External pilot (K)
Supply and exhaust block (Q)

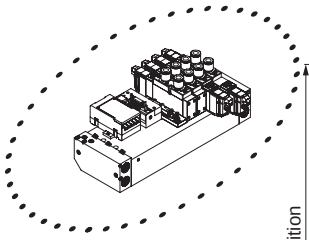

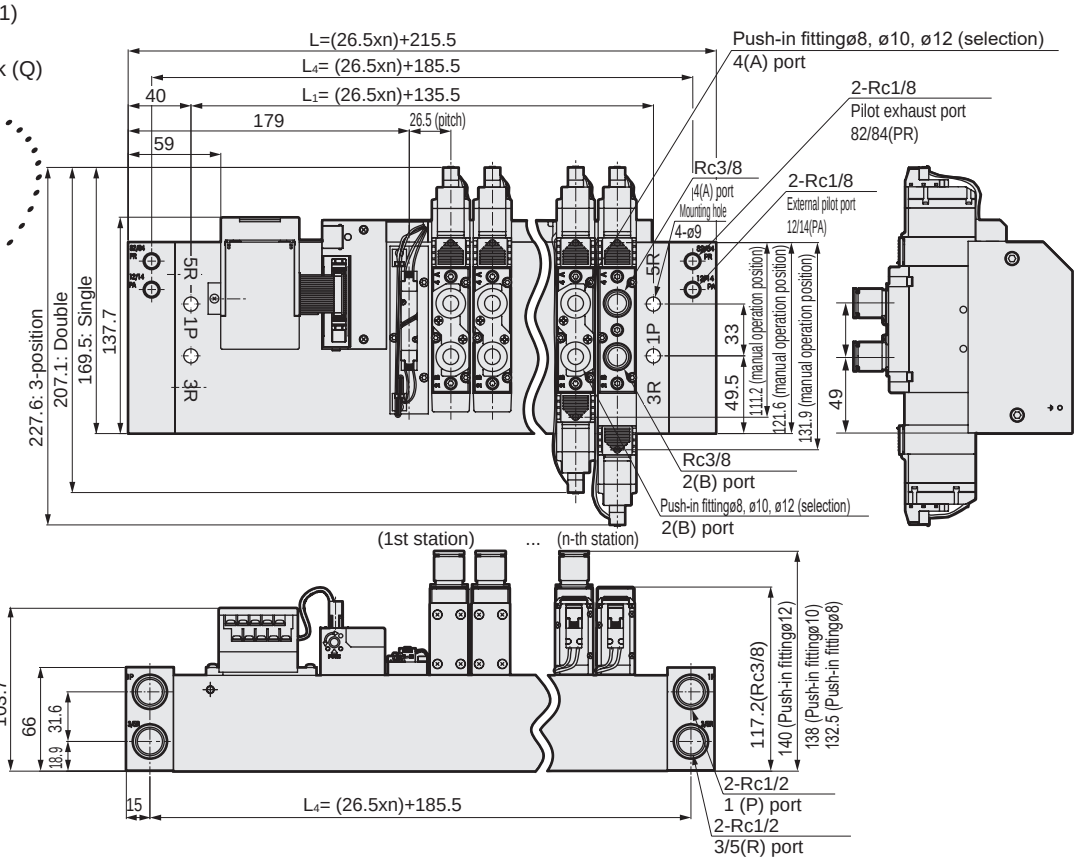

Station No.	2	3	4	5	6	7	8
L	268.5	295	321.5	348	374.5	401	427.5
L_1	188.5	215	241.5	268	294.5	321	347.5
L_4	238.5	265	291.5	318	344.5	371	397.5

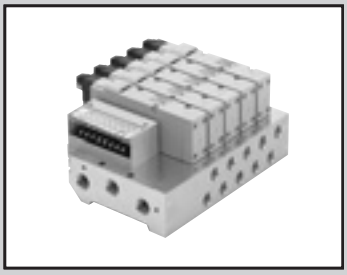

Reduced wiring manifold (Common terminal block/D sub-connector/ flat cable connector)
Base piping
Direct mount

M4GB4-T* Series

* Refer to page 788 for serial transmission.

● Cylinder bore size: ø100 to ø140

Manifold common specifications

Item		Description
Manifold		Reduced wiring integrated base
Mounting method		Direct mount
Supply and exhaust method		Common supply/common exhaust
Pilot exhaust method	Internal pilot	Main valve/pilot valve common exhaust (Pilot exhaust check valve built-in)
	External pilot	Main valve/pilot valve individual exhaust
Piping direction		Lateral direction from base
Valve and operation		Pilot operated soft spool valve
Working fluid		Compressed air
Max. working pressure MPa		0.7 (≈100 psi, 7 bar)
Min. working pressure MPa		0.2 (≈29 psi, 2 bar) (*3)
Proof pressure MPa		1.05 (≈150 psi, 10.5 bar)
Ambient temperature °C		-5 (23°F) to 55 (131°F) (no freezing)
Fluid temperature °C		5 (41°F) to 55 (131°F)
Manual override		Non-locking/locking common
Lubrication (*1)		Not required
Degree of protection (*2)		Dust-proof (IP40 equivalent)
Vibration resistance m/s^2		50 or less
Shock resistance m/s^2		300 or less
Atmosphere		Cannot be used in corrosive gas environments

*1: Use turbine oil Class 1 ISO VG32 for lubrication. Excessive or intermittent lubrication results in unstable operation.
*2: Avoid water drops or oil, etc., during use.
*3: The working pressure range is 0 to 0.7 MPa when the external pilot (option code: K) is selected. Set the external pilot pressure between 0.2 and 0.7 MPa.

Electrical specifications

Item			Description
Rated voltage V		DC	12, 24
Voltage fluctuation range			±10%
Holding current	A	12 VDC	0.083
		24 VDC	0.042
Power consumption	W	12 VDC	1.0
		24 VDC	1.0
Thermal class			B
Surge suppressor			Varistor
Indicator			LED

JIS symbol

● 5-port valve

2-position single

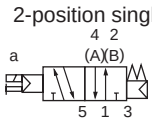

2-position double

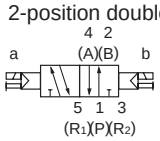

3-position all ports closed

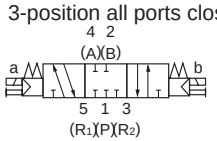

3-position A/B/R connection

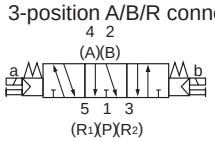

3-position P/A/B connection

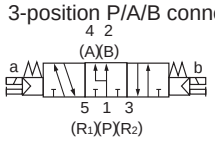

Individual specifications

Item		M4GB4 Direct mount		
Pilot operated		Standard (Internal pilot)		External pilot (*3)
Max. station No.		11 stations		
Port size	A/B port	Push-in fitting ø8, ø10, ø12 Rc1/4, Rc3/8 G1/4, G3/8 NPT1/4, NPT3/8	Rc1/2, G1/2, NPT1/2	Push-in fitting ø8, ø10, ø12 Rc1/4, Rc3/8, Rc1/2 G1/4, G3/8, G1/2 NPT1/4, NPT3/8, NPT1/2
	P/R1/R2 port	Rc3/8, G3/8, NPT3/8 (*1)	Rc1/2, G1/2, NPT1/2 (*2)	
Manifold base Weight calculation formula (n: station No.) g		292n+907	391n+1119	392n+1060

For 5 and over manifold station No., use ports on both side for air supply and exhaust.
The manifold base weight is the value for screw specifications.
The max. station number of the manifold is limited by the max. number of solenoid for each of the following wiring specifications.
Dimensions of port sizes (P/R1/R2 port) Rc3/8 and Rc1/2 are different.
*1: Refer to pages 780 and 783 for dimensions of port size Rc3/8.
*2: Refer to pages 781 and 784 for dimensions of port size Rc1/2.
*3: Refer to pages 782 and 785 for dimensions of the external pilot (option code: K).

Performance/characteristics by model

Item			M4GB4 ON	M4GB4 OFF
Response time ms	2-position	Single	40(40)	40(52)
		Double	40(52)	40(52)
	3-position	ABR connection	60(72)	60(72)

Values with lamp/surge suppressor are shown. The response times are values with working pressure of 0.5 MPa at 20°C, without lubrication. They depend on the pressure and the lubricant quality. Values in ( ) are for AC.

Flow characteristics

Model No.	Port size P, R1, R2	Solenoid position		P → A/B		A/B→R1/R2	
				C[dm³/(s·bar)]	b	C[dm³/(s·bar)]	b
M4GB4	(*1) Rc3/8 G3/8 NPT3/8	2-position		6.4	0.42	6.9	0.12
		3-position	All ports closed	6.0	0.37	6.8	0.12
			ABR connection	6.1	0.38	7.1	0.15
			PAB connection	6.0	0.37	6.8	0.13
	(*2) Rc1/2 G1/2 NPT1/2	2-position		8.3	0.23	9.0	0.21
		3-position	All ports closed	7.4	0.15	8.8	0.19
			ABR connection	7.5	0.15	9.5	0.21
			PAB connection	7.7	0.21	8.7	0.18

Dimensions of port sizes (P/R1/R2 port) Rc3/8 and Rc1/2 are different.
*1 : Refer to pages 780 and 783 for dimensions of port size Rc3/8.
*2 : Refer to pages 781 and 784 for dimensions of port size Rc1/2.
*3 : Effective cross-sectional area S and sonic conductance C are converted as S ≈ 5.0 x C.

Wiring specifications

Item	T10 □ Common term. block	T11 □ Common term. block	T30 □ D sub-connector	T50 □ Flat cable 20-pin	T51 □ Flat cable 20-pin	T52 □ Flat cable 10-pin	T53 □ Flat cable 26-pin
Connector and terminal block specifications	M3 thread tightening 18 terminals	Clamping 26 terminals	D sub-connectors 25 terminals	MIL-C-83503 standard compliant pressure welding socket 20-pin	MIL-C-83503 standard compliant pressure welding socket 20-pin	MIL-C-83503 standard compliant pressure welding socket 10-pin	MIL-C-83503 standard compliant pressure welding socket 26-pin
Max. number of solenoids	16 points	24 points	24 points	16 points	18 points	8 points	24 points
Manifold internal wiring	Details on pages 816 to 823						

Wiring block position
Blank: Left side
R: Right side

Left side: T □

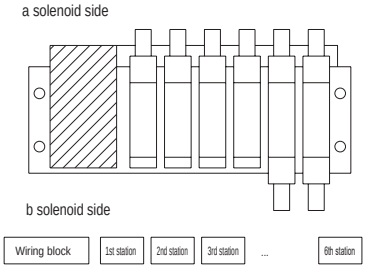

Right side: T □ R

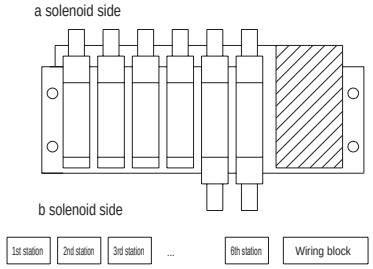

Array method
Blank: Standard sequential
W: Double wiring

(Ex.) In the case of T50 □

Manifold specifications

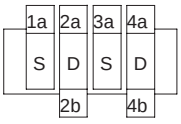

Standard wiring (sequential): Blank

Connector pin No.	1	2	3	4	5	6
Valve solenoid No.	1a	2a	2b	3a	4a	4b

Double wiring: W

Connector pin No.	1	2	3	4	5	6	7	8
Valve solenoid No.	1a	Blank	2a	2b	3a	Blank	4a	4b

Coolant proof specifications

Can be selected with "How to order" Item Ⓕ option "A" on page 778.

Specifications for rechargeable battery

(Catalog No. CC-1226A)

● For use in the rechargeable battery manufacturing process, materials used for air path and sliding section are limited

** - Voltage - **P4**

CE marking specifications

** - Voltage - **ST**

・ Standard voltage of 24 VDC or less is CE marking-compatible even if the model No. is not indicated with "ST".

M4GB4-T* Series

Reduced wiring manifold; base piping

How to order

Manifold model No.

M 4GB4 1 0 - 10 - T30 W A - 3 - 3

Discrete valve for mounting base

4GB4 1 9 - 00 - A2N A — 3

- Ⓐ Model No.
- Ⓑ Solenoid position
- Ⓒ Port size
- Ⓓ Reduced wiring connection
- Ⓔ Terminal/connector pin array
- Ⓕ Option
- Ⓖ Station No.
- Ⓗ Voltage

A2N indicates the A type (downward) connector, with lamp/surge suppressor and without lead wire.

● Refer to page 819 for the model No. of cables with D sub-connector.

● Refer to page 815 for the model No. of cables for flat cable connector.

Precautions for model No. selection

*1 : Two types of bases are available. Dimensions differ by bore size of the P/R1/R2 port.

*2 : Refer to pages 780 and 783 for dimensions of port size Rc3/8.

*3 : Refer to pages 781 and 784 for dimensions of port size Rc1/2.

*4 : Refer to pages 782 to 785 for dimensions of the external pilot (K).

*5 : P/R port is G thread.

*6 : P/R port is NPT thread.

*7 : Blank...The wiring will be based on the type of valve used.
W ..... All wired for double solenoid regardless of the type of valve used.

*8 : When changing from a discrete valve for W wiring specifications to a double or 3-position valve, the A-connector socket assembly needs to be purchased separately.

*9 : Consult with CKD when using a vacuum with the external pilot (K).

*10 : Specify the spacer mounting position and quantity in manifold specifications sheet. Refer to pages 796 and 797 for details.

*11 : Cannot be selected with discrete valve for integrated base.

* Be sure to fill in the "Manifold specifications sheet" (pages 811 and 812).

Code	Description	Ⓐ Model No. 4GB4
Ⓑ Solenoid position		
1	2-position single	●
2	2-position double	●
3	3-position all ports closed	●
4	3-position ABR connection	●
5	3-position PAB connection	●
8	Mix manifold (when there are multiple solenoid positions)	●

Ⓒ Port size

Port	A/B Port	P/R1/R2 port (*1) Option: Other than K Rc3/8 (*2)	Rc1/2 (*3)	Option: K Rc1/2 (*4)
C8	ø8 Push-in fitting	●		●
C10	ø10 Push-in fitting	●		●
C12	ø12 Push-in fitting	●		●
CX	Push-in fitting mix	●		●
08	Rc1/4	●		●
10	Rc3/8	●		●
15	Rc1/2		●	●
08G	G1/4	● (*5)		● (*5)
10G	G3/8	● (*5)		● (*5)
15G	G1/2		● (*5)	● (*5)
08N	NPT1/4	● (*6)		● (*6)
10N	NPT3/8	● (*6)		● (*6)
15N	NPT1/2		● (*6)	● (*6)

Ⓓ Reduced wiring (lamp and surge suppressor provided as standard)

T10	Common terminal block (M3 thread)	Left-side spec	●
T10R		Right-side spec	●
T11	Common terminal block (clamping)	Left-side spec	●
T11R		Right-side spec	●
T30	D sub-connector	Left-side spec	●
T30R		Right-side spec	●
T50	20-pin flat cable connector (with power supply terminal)	Left-side spec	●
T50R		Right-side spec	●
T51	20-pin flat cable connector (without power supply terminal)	Left-side spec	●
T51R		Right-side spec	●
T52	10-pin flat cable connector (without power supply terminal)	Left-side spec	●
T52R		Right-side spec	●
T53	26-pin flat cable connector (without power supply terminal)	Left-side spec	●
T53R		Right-side spec	●

Ⓔ Terminal/connector pin array

Blank	Standard wiring	(*7)	●
W	Double wiring	(*7) (*8)	●

Ⓕ Option

Blank	None		●
K	External pilot	(*4) (*9)	●
A	Coolant proof		●
F	A/B port filter integrated (P-port: Standard)		●
Z1	Air supply spacer	(*10) (*11)	●
Z3	Exhaust spacer	(*10) (*11)	●
Q	Supply and exhaust block	(*11)	●

Ⓖ Station No.

2	2 stations	●
to	to	
11	11 stations	

Ⓗ Voltage

3	24 VDC	●
4	12 VDC	●

is not available.

Manifold components explanation and parts list

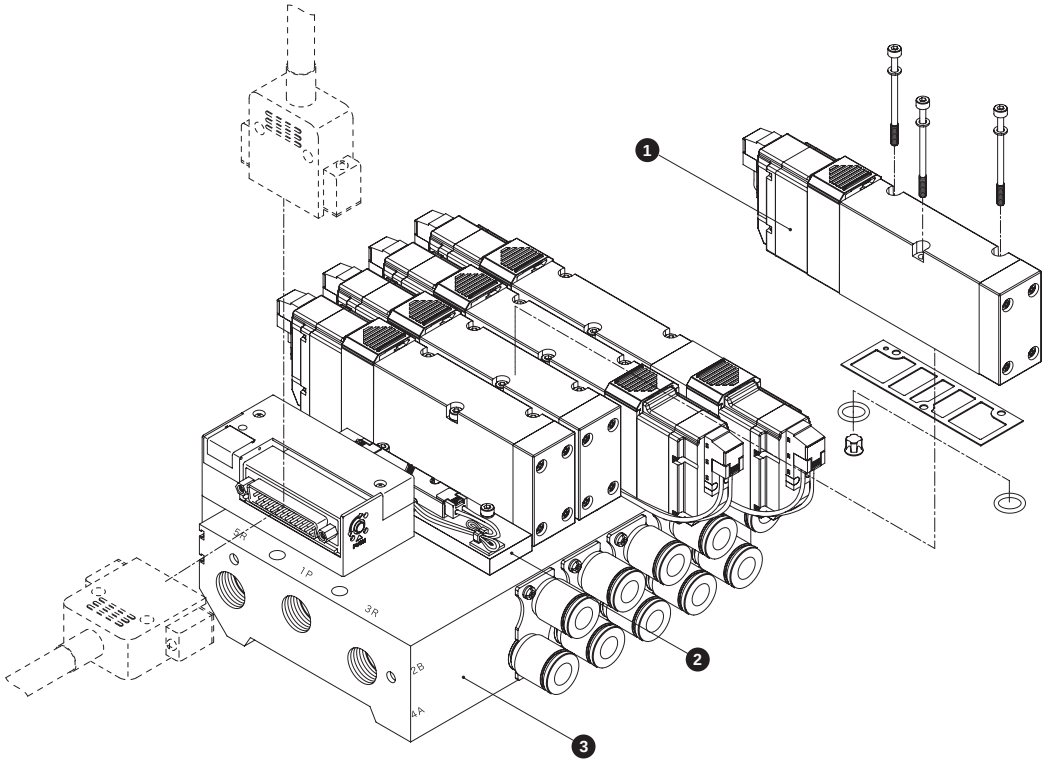

Main parts list

No.	Component name	Model No.	Content	Remarks
1	Discrete valve for mounting base	4GB4□9-00-A2N [Option] - [Voltage] [Solenoid position]	Discrete valve Gasket Mounting screws 3 O-ring 2 Check valve 2 (1)	Size: 4GB4 / M3; Tightening torque (N·m): 1.7
2	Masking plate	4GB4-MPC	Masking plate for reduced wiring Gasket Mounting screws 3 O-ring 2 Check valve 2	
3	Manifold base assembly	M4GB4- [Port size] - [Reduced wiring connection] [Option] - [Station No.]	Manifold base Wiring block	

( ) applies when 4GB419 is selected.

Parts list

No.	Part name		Model No.
-	A-connector socket assembly		4G4-SOCKET-ASSY-A□□- [Row No.] Blank: Left side, R: Right side A: aSOL side, B: bSOL side 2 to 11: Specify the position of the valve to be connected
-	Silencer	For Rc1/2	SLW-15A
		For Rc3/8	SLW-10A, SLW-10L
-	Cartridge push-in fitting and related parts		4G4-JOINT-C8 4G4-JOINT-C10 4G4-JOINT-C12

Dimensions

M4GB4

* Figure shows T50. Refer to pages 786 and 787 for detailed wiring block dimensions.

● Reduced wiring left side (T10/T11/T30/T50/T51/T52/T53)

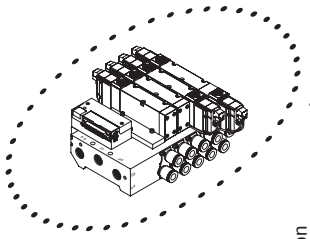

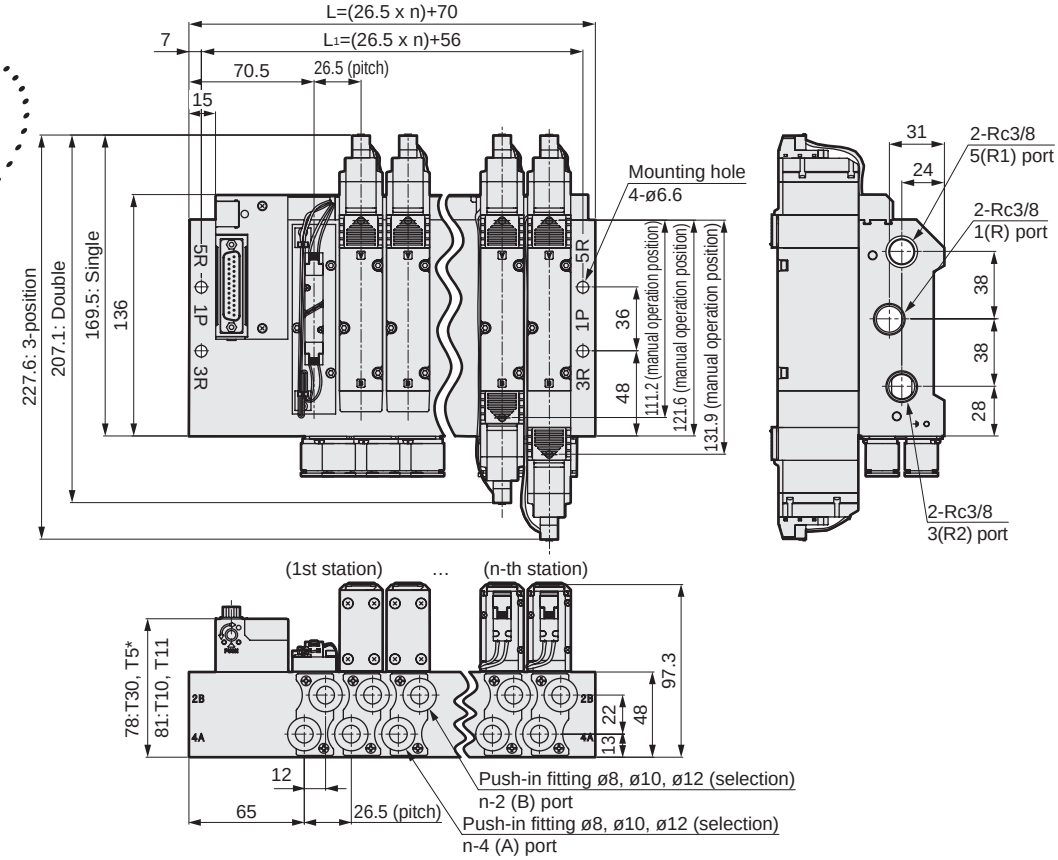

● Reduced wiring right side (T10R/T11R/T30R/T50R/T51R/T52R/T53R)

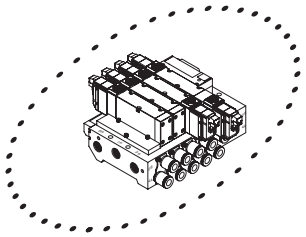

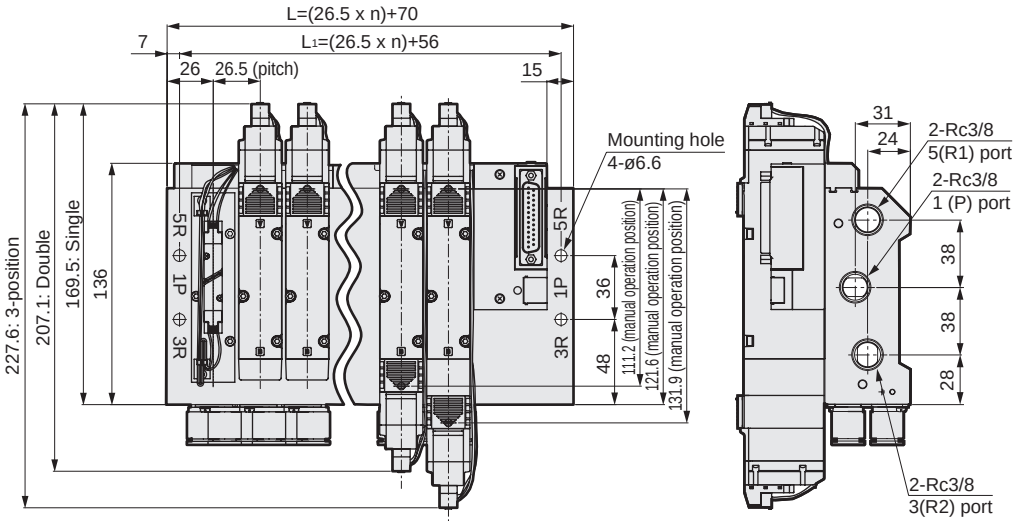

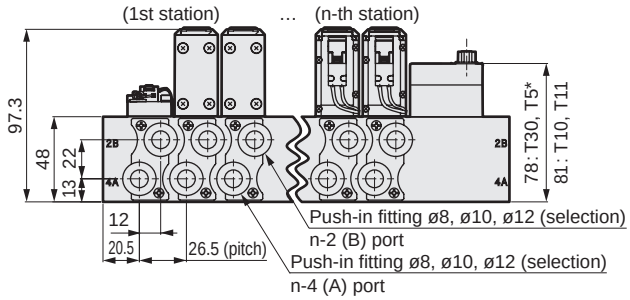

Station No.	2	3	4	5	6	7	8	9	10	11
L	123	149.5	176	202.5	229	255.5	282	308.5	335	361.5
L_1	109	135.5	162	188.5	215	241.5	268	294.5	321	347.5

Dimensions

M4GB4

* Figure shows T50. Refer to pages 786 and 787 for detailed wiring block dimensions.

● Reduced wiring left side (T10/T11/T30/T50/T51/T52/T53)
Rc1/2 female thread (15)

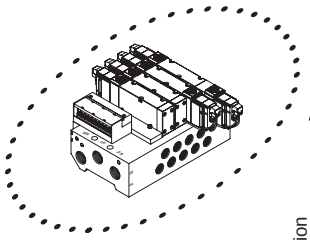

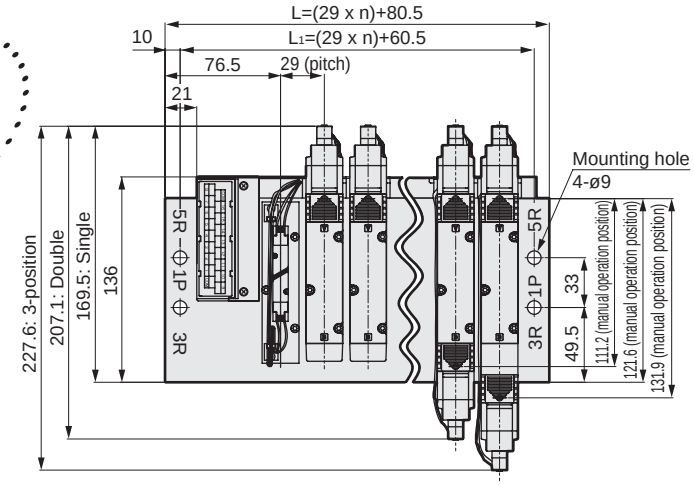

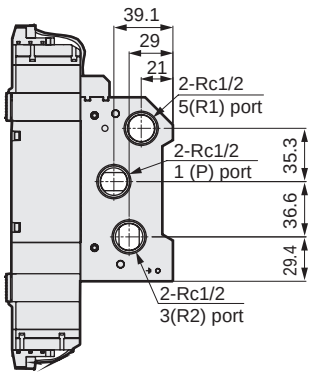

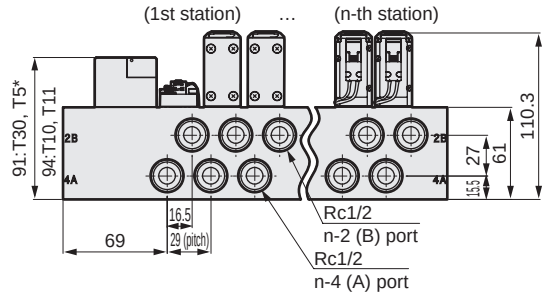

● Reduced wiring right side type (T10R/T11R/T30R/T50R/T51R/T52R/T53R)
Rc1/2 female thread (15)

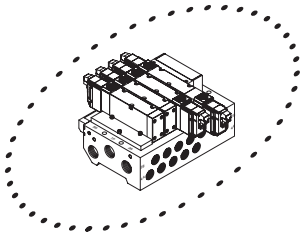

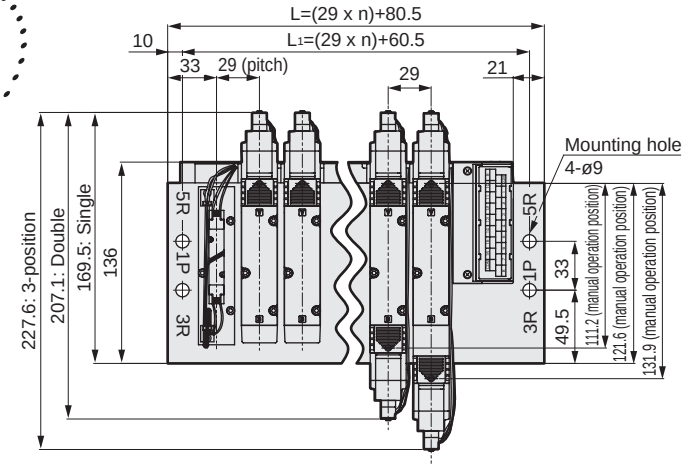

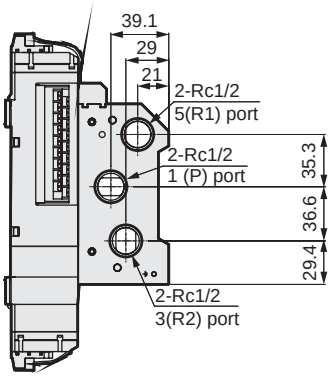

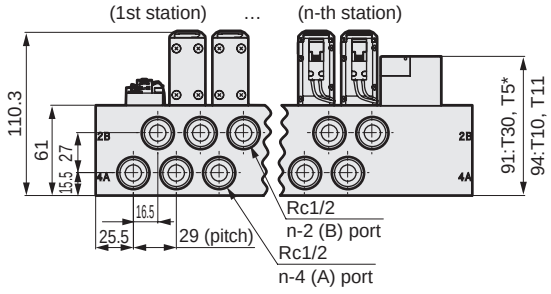

Station No.	2	3	4	5	6	7	8	9	10	11
L	138.5	167.5	196.5	225.5	254.5	283.5	312.5	341.5	370.5	399.5
L_1	118.5	147.5	176.5	205.5	234.5	263.5	292.5	321.5	350.5	379.5

Dimensions

M4GB4

* Figure shows T30. Refer to pages 786 and 787 for detailed wiring block dimensions.

● Reduced wiring left side (T10/T11/T30/T50/T51/T52/T53)
External pilot (K)

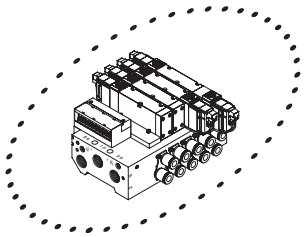

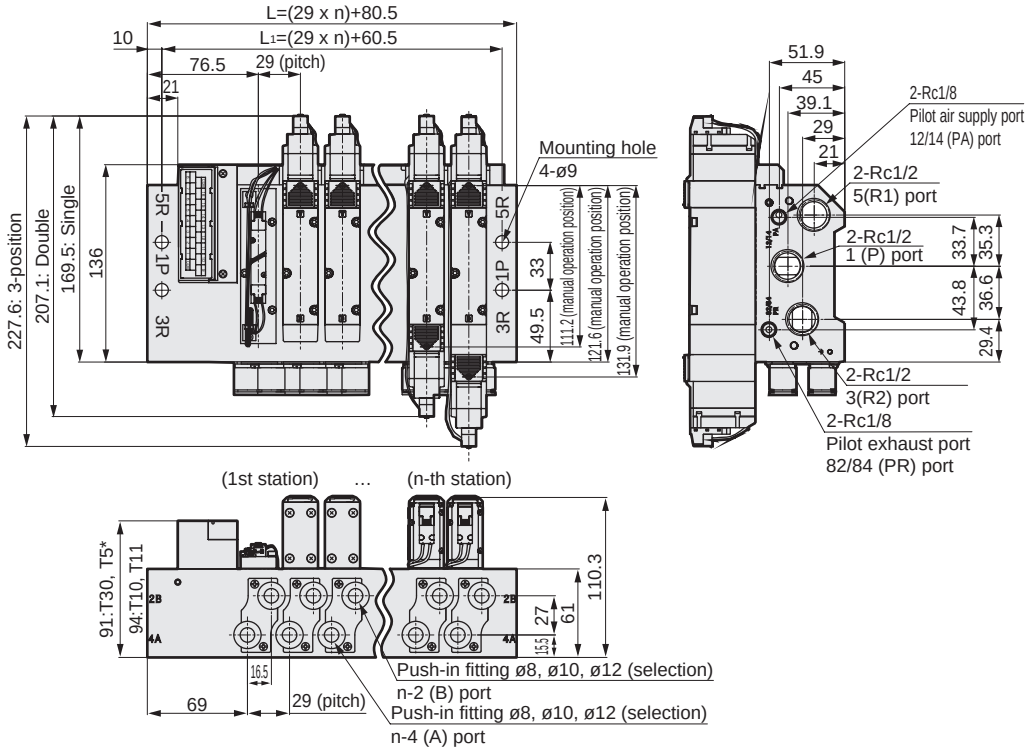

● Reduced wiring right side (T10R/T11R/T30R/T50R/T51R/T52R/T53R)
External pilot (K)

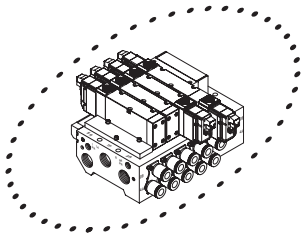

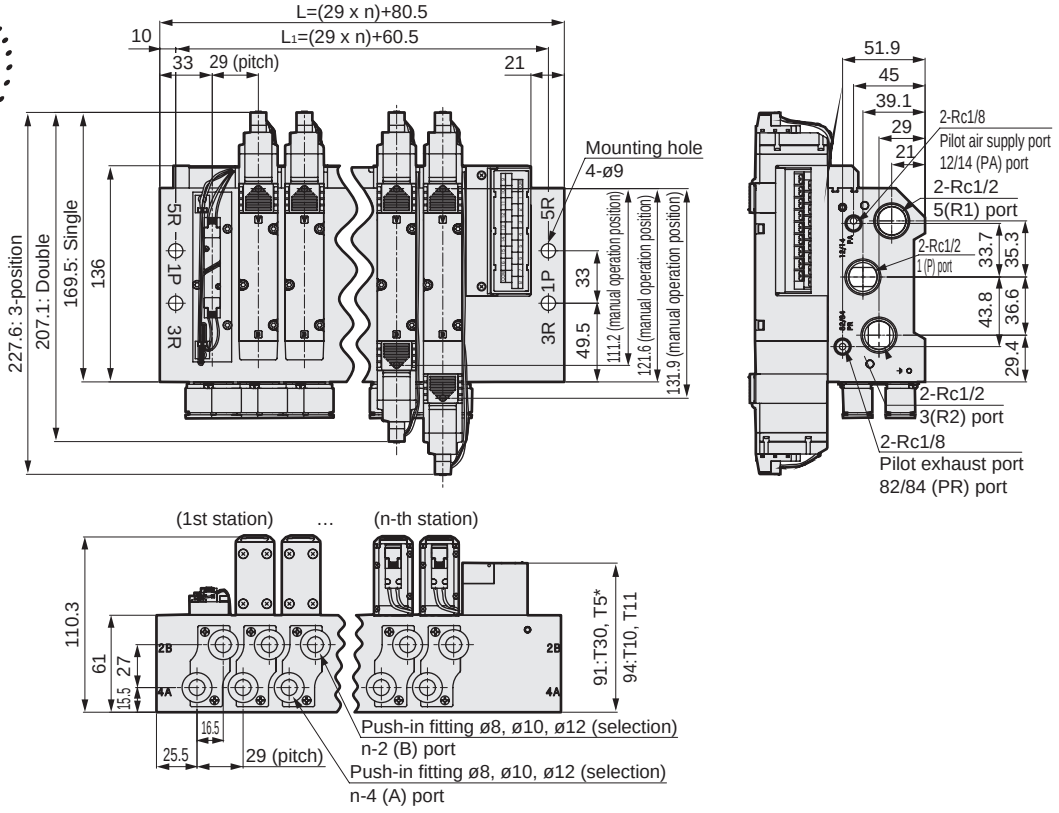

Station No.	2	3	4	5	6	7	8	9	10	11
L	138.5	167.5	196.5	225.5	254.5	283.5	312.5	341.5	370.5	399.5
L1	118.5	147.5	176.5	205.5	234.5	263.5	292.5	321.5	350.5	379.5

Dimensions

M4GB4

* Figure shows T10. Refer to pages 786 and 787 for detailed wiring block dimensions.

● Reduced wiring left side type (T10/T11/T30/T50/T51/T52/T53)
Supply and exhaust block (Q)

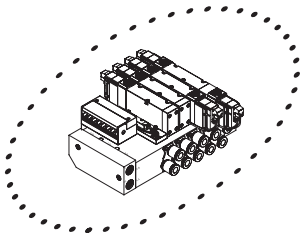

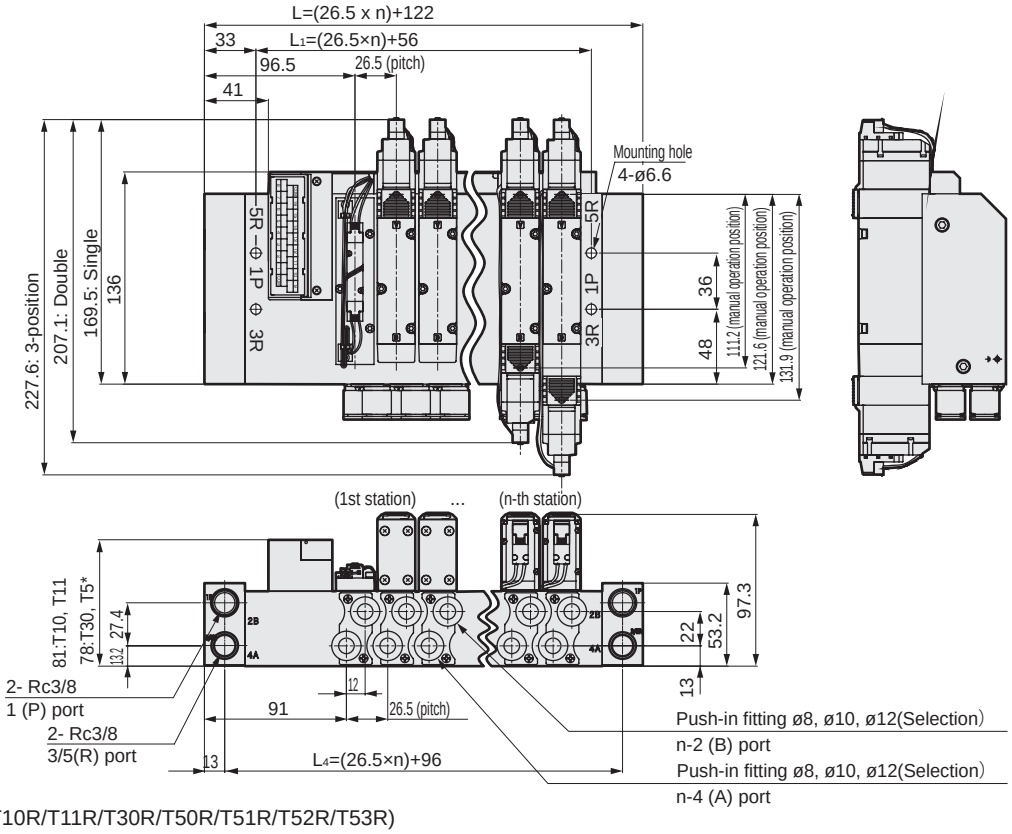

● Reduced wiring right side type (T10R/T11R/T30R/T50R/T51R/T52R/T53R)
Supply and exhaust block (Q)

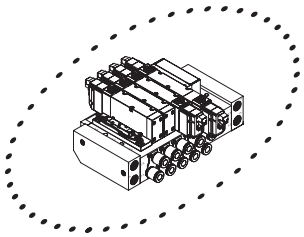

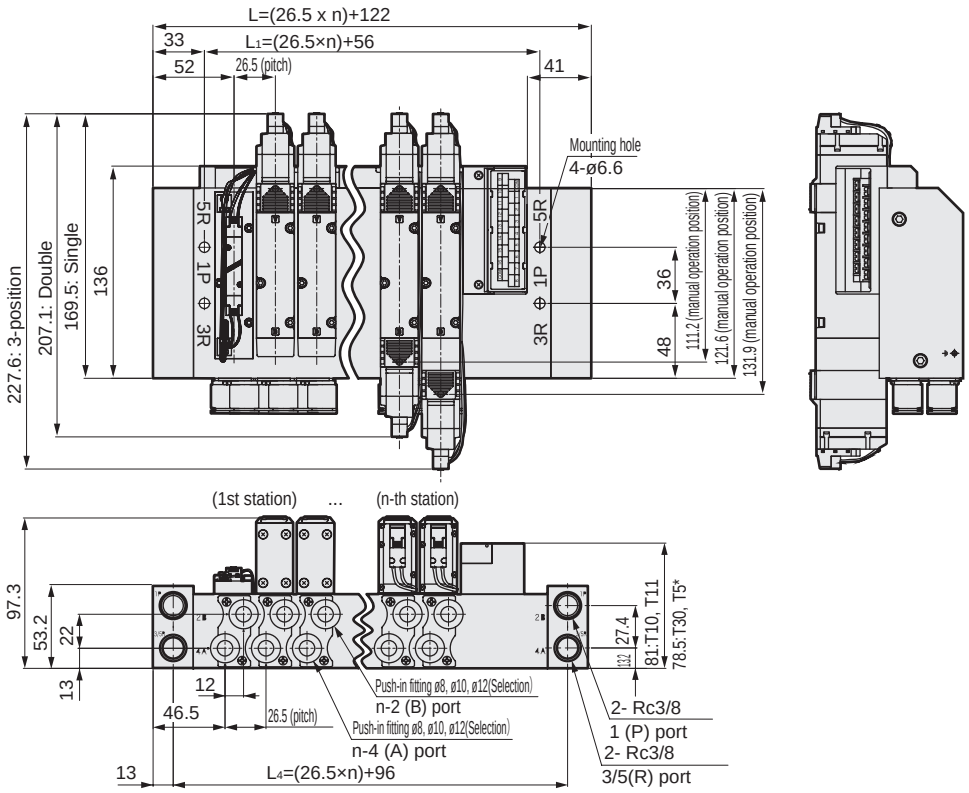

Station No.	2	3	4	5	6	7	8	9	10	11
L	175	201.5	228	254.5	281	307.5	334	360.5	387	413.5
L_1	109	135.5	162	188.5	215	241.5	268	294.5	321	347.5
L_4	149	175.5	202	228.5	255	281.5	308	334.5	361	387.5

Dimensions

M4GB4

* Figure shows T10. Refer to pages 786 and 787 for detailed wiring block dimensions.

● Reduced wiring left side (T10/T11/T30/T50/T51/T52/T53)
Rc1/2 female thread (15)
Supply and exhaust block (Q)

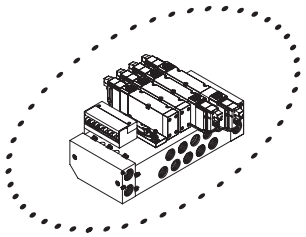

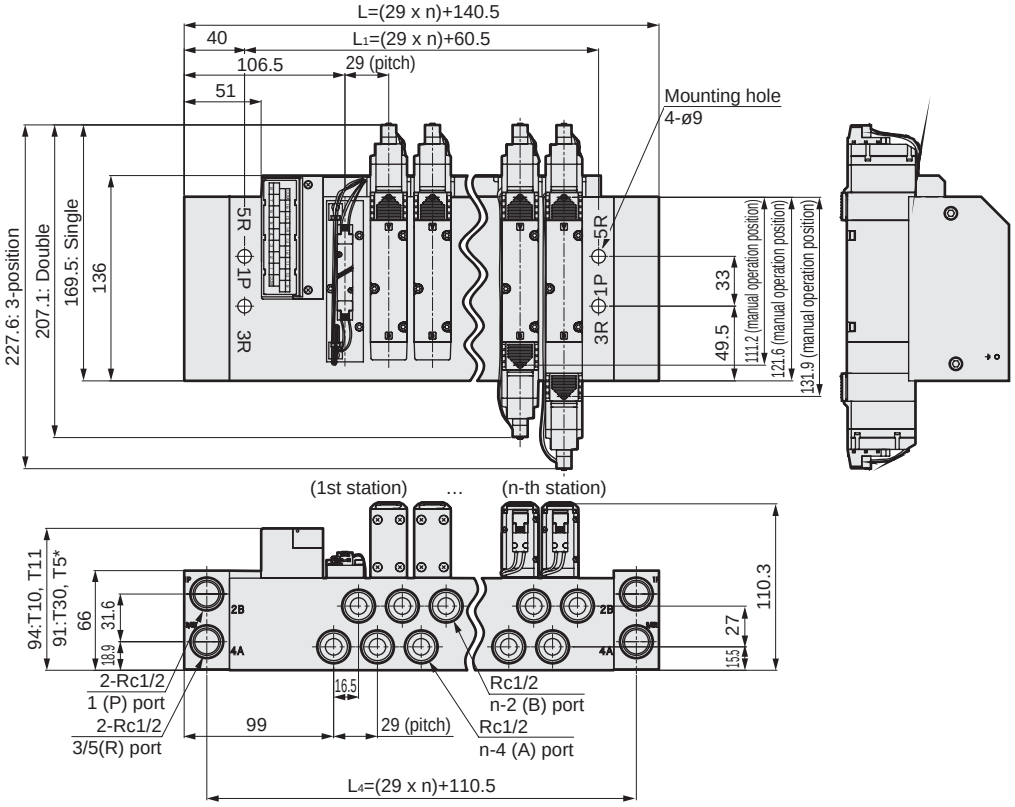

● Reduced wiring right side (T10R/T11R/T30R/T50R/T51R/T52R/T53R)
Rc1/2 female thread (15)
Supply and exhaust block (Q)

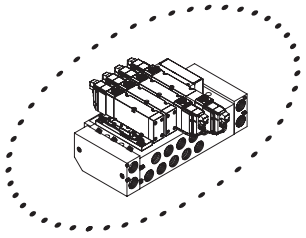

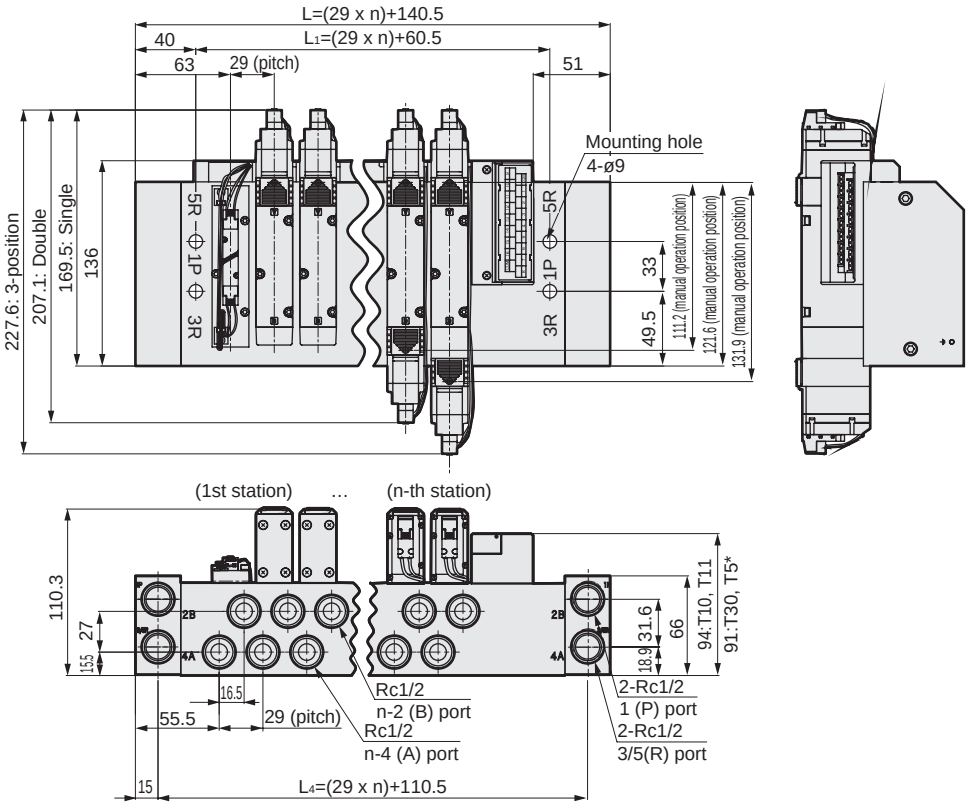

Station No.	2	3	4	5	6	7	8	9	10	11
L	198.5	227.5	256.5	285.5	314.5	343.5	372.5	401.5	430.5	459.5
L_1	118.5	147.5	176.5	205.5	234.5	263.5	292.5	321.5	350.5	379.5
L_4	168.5	197.5	226.5	255.5	284.5	313.5	342.5	371.5	400.5	429.5

Dimensions

M4GB4

* Figure shows T10. Refer to pages 786 and 787 for detailed wiring block dimensions.

● Reduced wiring left side (T10/T11/T30/T50/T51/T52/T53)
External pilot (K)
Supply and exhaust block (Q)

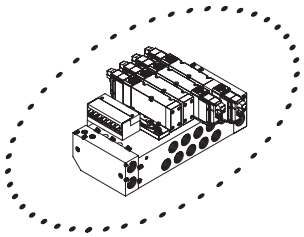

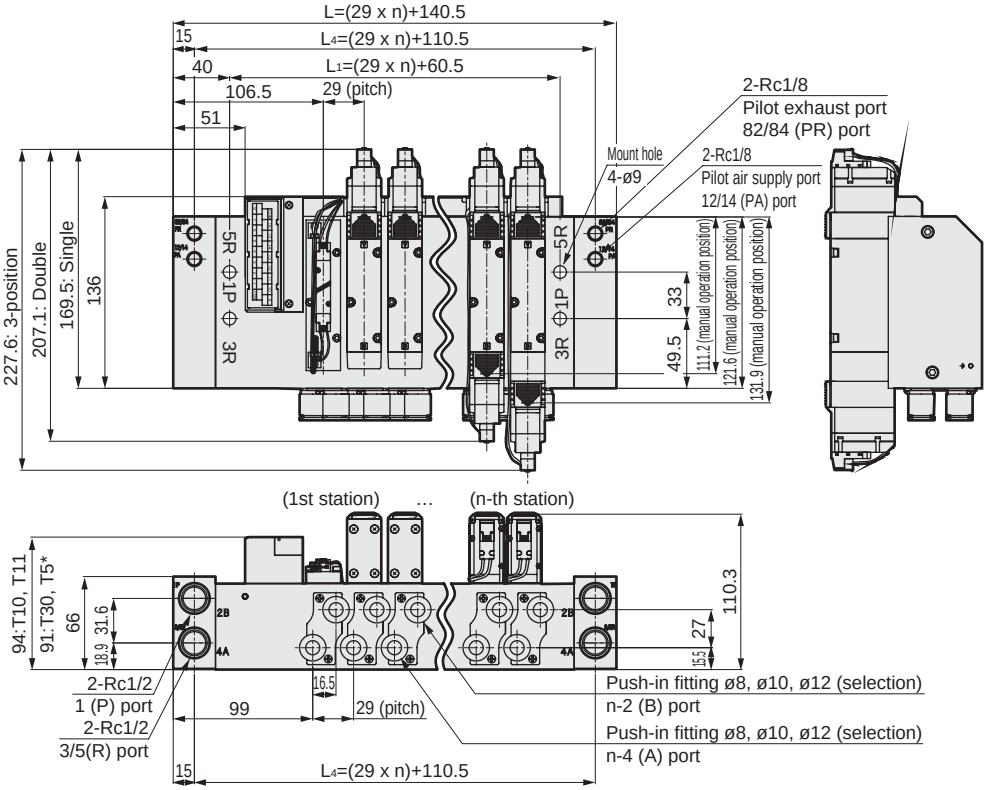

● Reduced wiring right side (T10R/T11R/T30R/T50R/T51R/T52R/T53R)
External pilot (K)
Supply and exhaust block (Q)

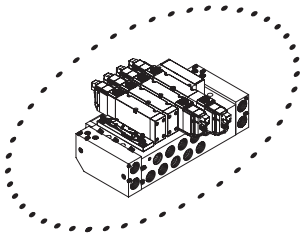

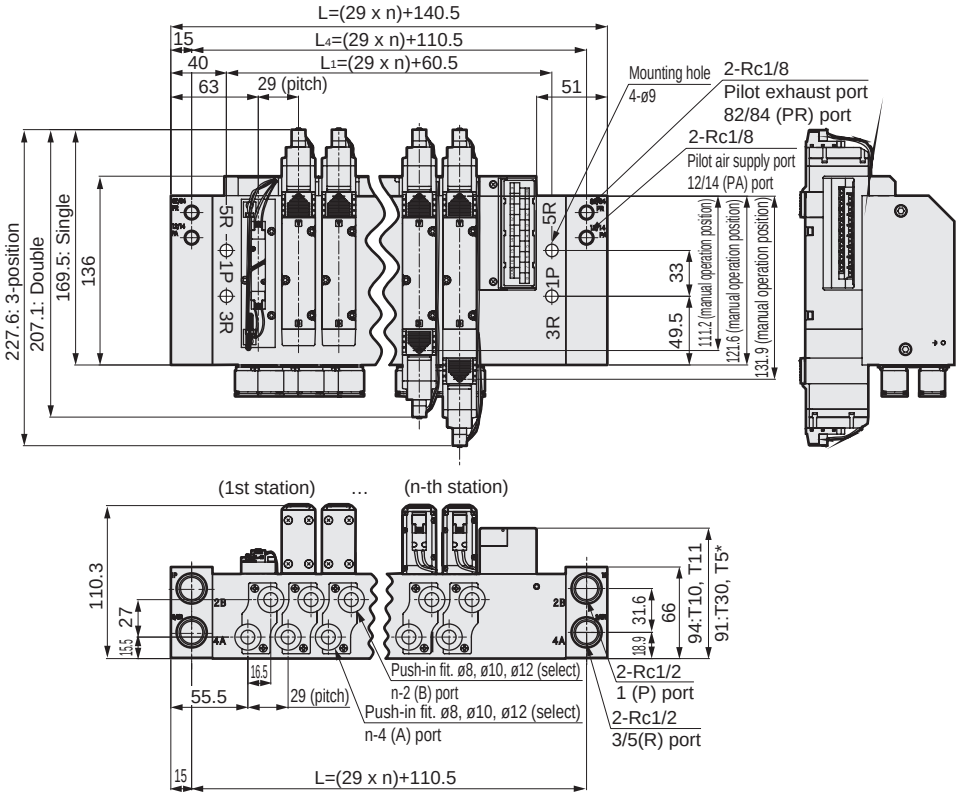

Station No.	2	3	4	5	6	7	8	9	10	11
L	198.5	227.5	256.5	285.5	314.5	343.5	372.5	401.5	430.5	459.5
L_1	118.5	147.5	176.5	205.5	234.5	263.5	292.5	321.5	350.5	379.5
L_4	168.5	197.5	226.5	255.5	284.5	313.5	342.5	371.5	400.5	429.5

Reduced wiring part: Dimensions

● Common terminal block (M3 thread)
T10

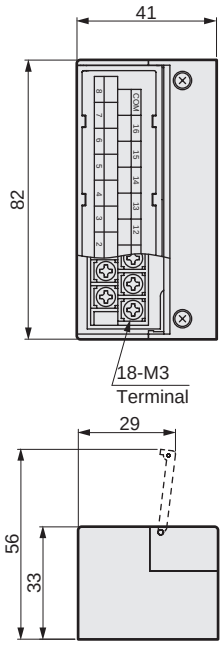

● Common terminal block (clamping)
T11

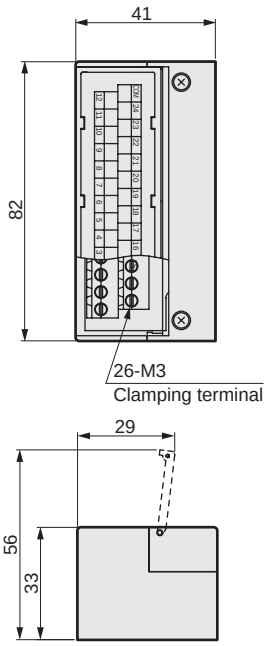

● D sub-connector
T30

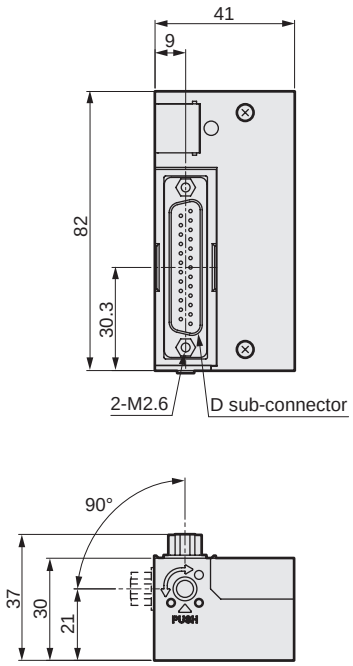

● 20-pin flat cable connector (with power supply terminal)
T50

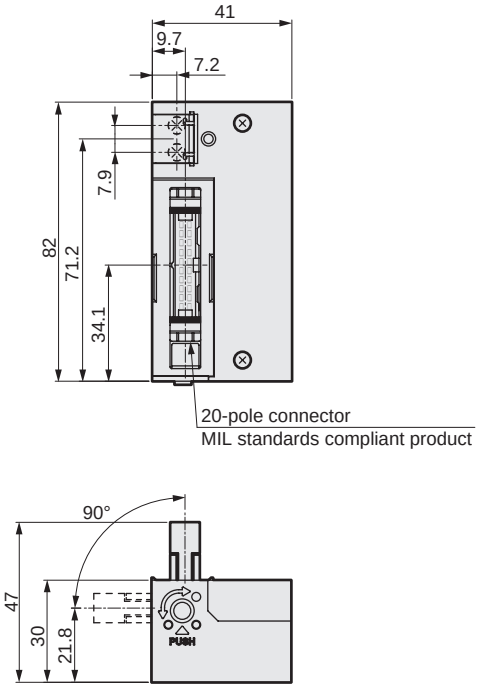

Reduced wiring part: Dimensions

● 20-pin flat cable connector (without power supply terminal)
T51

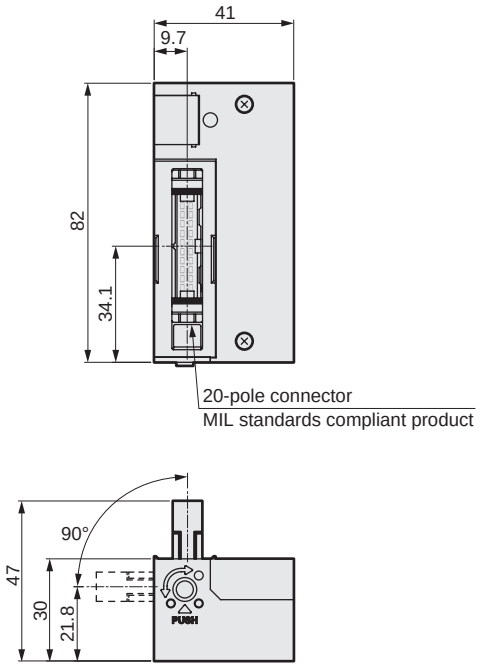

● 10-pin flat cable connector (without power supply terminal)
T52

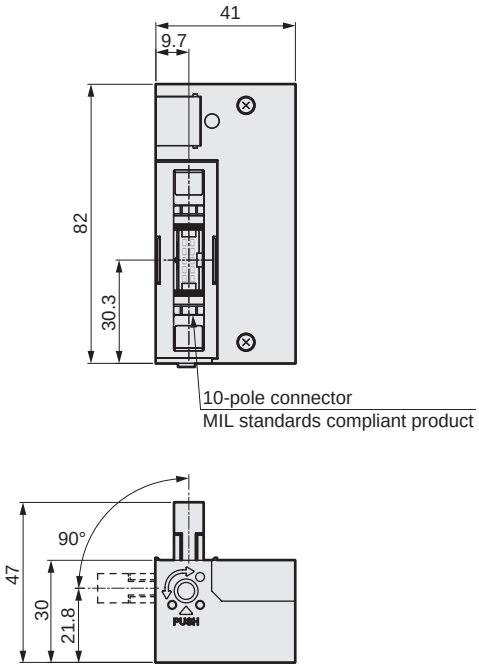

● 26-pin flat cable connector (without power supply terminal)
T53

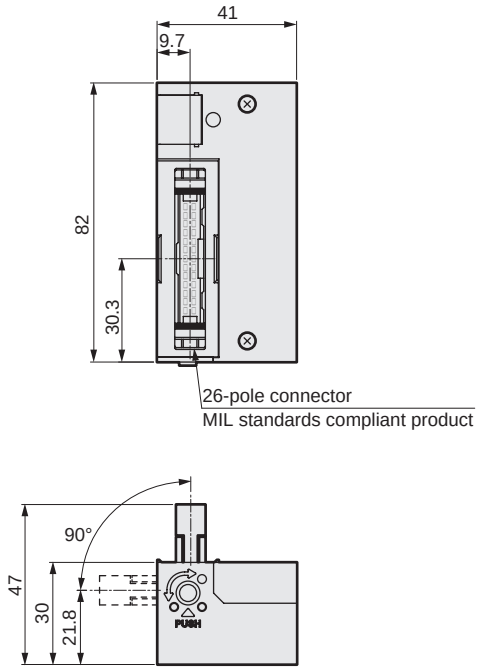

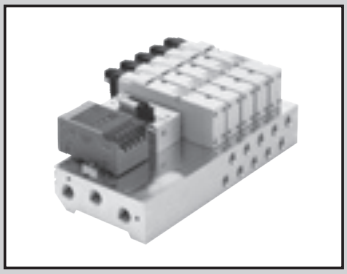

Reduced wiring manifold (serial transmission)
Base piping
Direct mount

M4GB4-T6G1 Series

● Cylinder bore size: ø100 to ø140

RoHS

Manifold common specifications

Item		Description
Manifold		Serial transmission integrated base
Mounting method		Direct mount
Supply and exhaust method		Common supply/common exhaust
Pilot exhaust method	Internal pilot	Main valve/pilot valve common exhaust (Pilot exhaust check valve built-in)
	External pilot	Main valve/pilot valve individual exhaust
Piping direction		Lateral direction from base
Valve and operation		Pilot operated soft spool valve
Working fluid		Compressed air
Max. working pressure MPa		0.7 (≈100 psi, 7 bar)
Min. working pressure MPa		0.2 (≈29 psi, 2 bar) (*3)
Proof pressure MPa		1.05 (≈150 psi, 10.5 bar)
Ambient temperature °C		-5 (23°F) to 55 (131°F) (no freezing)
Fluid temperature °C		5 (41°F) to 55 (131°F)
Manual override		Non-locking/locking common type
Lubrication (*1)		Not required
Degree of protection (*2)		Dust-proof (IP40 equivalent)
Vibration resistance m/s^2		50 or less
Shock resistance m/s^2		300 or less
Atmosphere		Cannot be used in corrosive gas environments

*1: Use turbine oil Class 1 ISO VG32 for lubrication. Excessive or intermittent lubrication results in unstable operation.
*2: Avoid water drops or oil, etc., during use.
*3: The working pressure range is 0 to 0.7 MPa when the external pilot (option code: K) is selected. Set the external pilot pressure between 0.2 and 0.7 MPa.

Electrical specifications

Item		Description
Rated voltage V	DC	24
Voltage fluctuation range		±10%
Holding current A		0.042
Power consumption W		1.0
Thermal class		B
Surge suppressor		Varistor
Indicator		LED

JIS symbol

● 5-port valve

2-position single

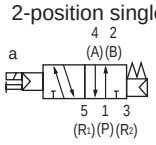

2-position double

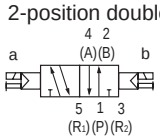

3-position all ports closed

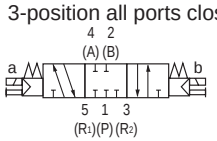

3-position A/B/R connection

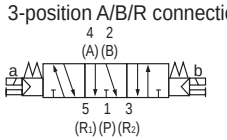

3-position P/A/B connection

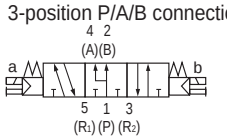

Individual specifications

Item		M4GB4 Direct mount		
Pilot operated		Standard (Internal pilot)		External pilot (*3)
Max. station No.		8 stations		
Port size	A/B port	Push-in fitting ø8, ø10, ø12 Rc1/4, Rc3/8 G1/4, G3/8 NPT1/4, NPT3/8	Rc1/2, G1/2, NPT1/2	Push-in fitting ø8, ø10, ø12 Rc1/4, Rc3/8, Rc1/2 G1/4, G3/8, G1/2 NPT1/4, NPT3/8, NPT1/2
	P/R1/R2 port	Rc3/8, G3/8, NPT3/8 (*1)	Rc1/2, G1/2, NPT1/2	(*2)
Manifold base Weight calculation formula (n: station No.) g		292n+1864	391n+2432	392n+2329

For 5 and over manifold station No., use ports on both side for air supply and exhaust.
The manifold base weight is the value for screw specifications.

Dimensions of port sizes (P/R1/R2 port) Rc3/8 and Rc1/2 are different.
*1: Refer to the top figure on pages 792 and 794 for dimensions of port size Rc3/8.
*2: Refer to the bottom figure on pages 792 and 794 for dimensions of port size Rc1/2.
*3: Refer to pages 793 and 795 for dimensions of the external pilot (option code: K).

Performance/characteristics by model

Item			M4GB4 ON	M4GB4 OFF
Response time ms	2-position	Single	40(40)	40(52)
		Double	40(52)	40(52)
	3-position	ABR connection	60(72)	60(72)

Values with lamp/surge suppressor are shown. The response times are values with working pressure of 0.5 MPa at 20°C, without lubrication. They depend on the pressure and the lubricant quality. Values in ( ) are for AC.

Flow characteristics

Model No.	Port size P, R1, R2	Solenoid position		P→A/B		A/B→R1/R2	
				C[dm³/(s·bar)]	b	C[dm³/(s·bar)]	b
M4GB4	(*1) Rc3/8 G3/8 NPT3/8	2-position		6.4	0.42	6.9	0.12
		3-position	All ports closed	6.0	0.37	6.8	0.12
			ABR connection	6.1	0.38	7.1	0.15
			PAB connection	6.0	0.37	6.8	0.13
	(*2) Rc1/2 G1/2 NPT1/2	2-position		8.3	0.23	9.0	0.21
		3-position	All ports closed	7.4	0.15	8.8	0.19
			ABR connection	7.5	0.15	9.5	0.21
			PAB connection	7.7	0.21	8.7	0.18

Dimensions of port sizes (P/R1/R2 port) Rc3/8 and Rc1/2 are different.
*1 : Refer to the top figure on pages 792 and 794 for dimensions of port size Rc3/8.
*2 : Refer to the bottom figure on pages 792 and 794 for dimensions of port size Rc1/2.
*3 : Effective cross-sectional area S and sonic conductance C are converted as S ≈ 5.0 x C.

Serial transmission device unit specifications

Item		T6G1
Network name		CC-Link ver1.10
Power supply voltage	Unit side	24 VDC ±10%
	Valve side	24 VDC +10%, -5%
	Communication side	-
Current consumption	Unit side	100 mA or less (when all output points are ON)
	Valve side	15 mA or less (when all output points are OFF)
	Communication side	-
Output points		16 points
Occupied number		1 station
Operation display		LED (power supply and communication status)

Coolant proof specifications

Can be selected with "How to order" Item Ⓕ option "A" on page 790.

Specifications for rechargeable battery

(Catalog No. CC-1226A)

● For use in the rechargeable battery manufacturing process, materials used for air path and sliding section are limited

** - Voltage - **P4**

4GA/B
M4GA/B
MN4GA/B
4GA/B (master)
4GB With sensor
4GD/E
M4GD/E
MN4GD/E
4GA4/B4
MN3E MN4E
W4GA/B2
W4GB4
MN3S0 MN4S0
4SA/B0
4KA/B
4KA/B (master)
4F
4F (master)
PV5G GMF
PV5 GMF
PV5S-0
3Q
MV3QR
3MA/B0
3PA/B
P/M/B
NP/NAP NVP
4G*0EJ
4F*0EX
4F*0E
HMV HSV
2QV 3QV
SKH
Silencer
TotAirSys (Total Air)
TotAirSys (Gamma)
Ending

M4GB4-T6G1 Series

Reduced wiring manifold; base piping; serial transmission

How to order

Manifold model No.

M 4GB4 1 0 - 10 - T6G1 W A - 3 - 3

Discrete valve for mounting base

4GB4 1 9 - 00 - A2N A — 3

- A Model No.
- B Solenoid position
- C Port size
- D Serial transmission Zener diode is used as a surge suppressor.
- E Terminal/connector pin array
- F Option
- G Station No.
- H Voltage

A2N indicates the A type (downward) connector, with lamp/surge suppressor and without lead wire.

* Be sure to fill in the "Manifold specifications sheet" (page 813).

Code	Description	A Model No. 4GB4
B Solenoid position		
1	2-position single	●
2	2-position double	●
3	3-position all ports closed	●
4	3-position ABR connection	●
5	3-position PAB connection	●
8	Mix manifold (when there are multiple solenoid positions)	●

C Port size

Port	A/B Port	P/R1/R2 port (*1) Option: Other than K Rc3/8 (*2)	Rc1/2 (*3)	Option: K Rc1/2 (*4)
C8	ø8 Push-in fitting	●		●
C10	ø10 Push-in fitting	●		●
C12	ø12 Push-in fitting	●		●
CX	Push-in fitting mix	●		●
08	Rc1/4	●		●
10	Rc3/8	●		●
15	Rc1/2		●	●
08G	G1/4	● (*5)		● (*5)
10G	G3/8	● (*5)		● (*5)
15G	G1/2		● (*5)	● (*5)
08N	NPT1/4	● (*6)		● (*6)
10N	NPT3/8	● (*6)		● (*6)
15N	NPT1/2		● (*6)	● (*6)

Code	Description	
D Serial transmission (lamp/surge suppressor provided as standard)		
T6G1	CC-Link 16 points	●
E Terminal/connector pin array		
Blank	Standard wiring (*7)	●
W	Double wiring (*7) (*8)	●
F Option		
Blank	None	●
K	External pilot (*4) (*9)	●
A	Coolant proof	●
F	A/B port filter integrated (P-port: Standard)	●
Z1	Air supply spacer (*10) (*11)	●
Z3	Exhaust spacer (*10) (*11)	●
Q	Supply and exhaust block (*11)	●
G Station No.		
2	2 stations	●
to	to	
8	8 stations	
H Voltage		
3	24 VDC	●

is not available.

Precautions for model No. selection

*1 : Two types of bases are available.
Dimensions differ by bore size of the P/R1/R2 port.
*2 : Refer to the top figure on pages 792 and 794 for dimensions of port size Rc3/8.
*3 : Refer to the bottom figure on pages 792 and 794 for dimensions of port size Rc1/2.
*4 : Refer to pages 793 and 795 for dimensions of the external pilot (K).
*5 : P/R port is G thread.
*6 : P/R port is NPT thread.
*7 : Blank ... The wiring will be based on the type of valve used.
W..... All wired for double solenoid regardless of the type of valve used.
*8 : When changing from a discrete valve for W wiring specifications to a double or 3-position valve, the A-connector socket assembly needs to be purchased separately.
*9 : Consult with CKD when using a vacuum with the external pilot (K).
*10: Specify the spacer mounting position and quantity in manifold specifications sheet. Refer to pages 796 to 797 for details.
*11 : Cannot be selected with discrete valve for integrated base.

Manifold components explanation and parts list

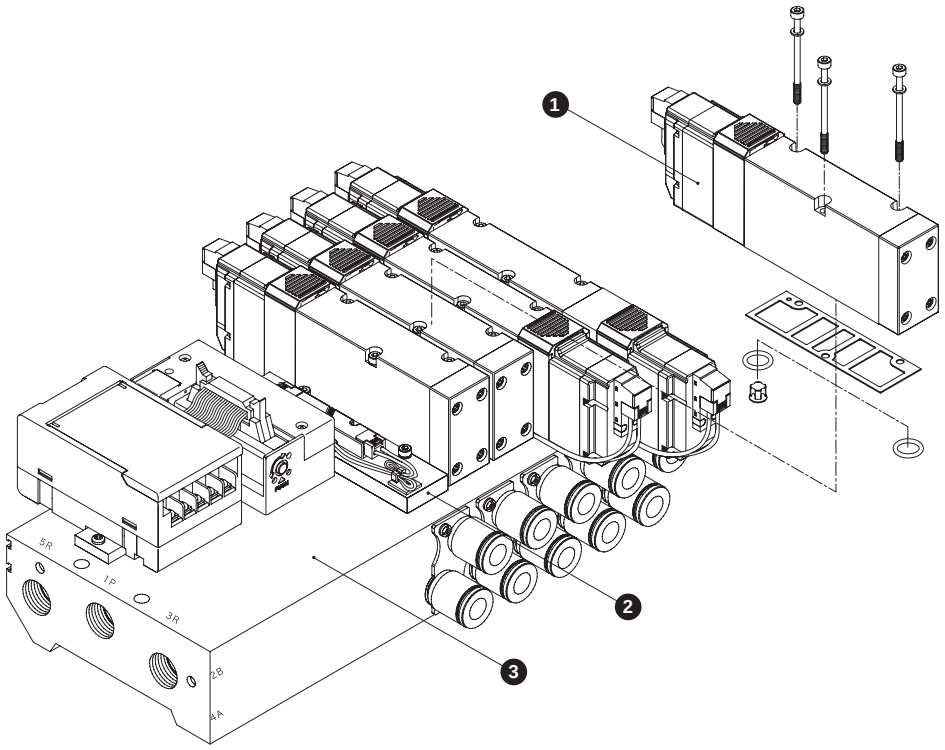

Main parts list

No.	Component name	Model No.	Content	Remarks
1	Discrete valve for mounting base	4GB4□9-00-A2N Option - Voltage Solenoid position	Discrete valve Gasket Mounting screws 3 O-ring 2 Check valve 2 (1)	Size: 4GB4 = M3; Tightening torque (N·m): 1.7
2	Masking plate	4GB4-MPC	Masking plate for reduced wiring Gasket Mounting screws 3 O-ring 2 Check valve 2	
3	Manifold base assembly	M4GB4- Port size -T6G1 Option - Station No.	Manifold base Wiring block	

( ) applies when 4GB419 is selected.

Parts list

No.	Part name		Model No.
-	A-connector socket assembly		4G4 - SOCKET - ASSY - A□□ - Row No. Blank: Left side, R: Right side A: aSOL side, B: bSOL side 2 to 8: Specify the position of the valve to be connected
-	Silencer	For Rc1/2	SLW-15A
		For Rc3/8	SLW-10A, SLW-10L
-	Cartridge push-in fitting and related parts		4G4-JOINT-C8 4G4-JOINT-C10 4G4-JOINT-C12

Dimensions

M4GB4

● Serial transmission (T6G1)

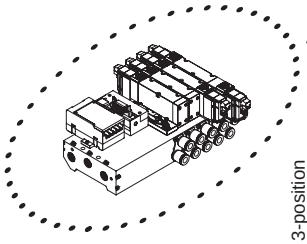

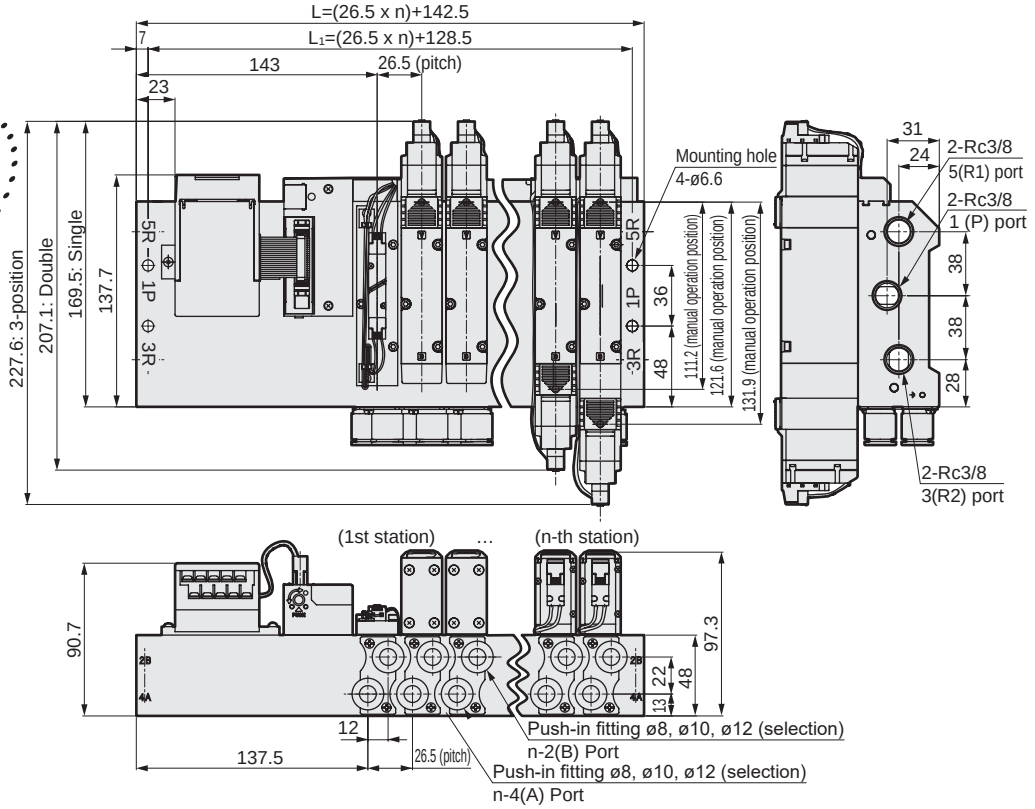

Station No.	2	3	4	5	6	7	8
L	195.5	222	248.5	275	301.5	328	354.5
L_1	181.5	208	234.5	261	287.5	314	340.5

● Serial transmission (T6G1)
Rc1/2 female thread (15)

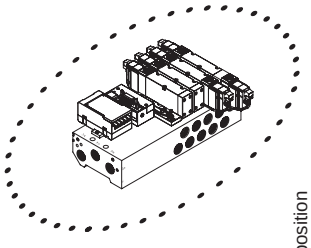

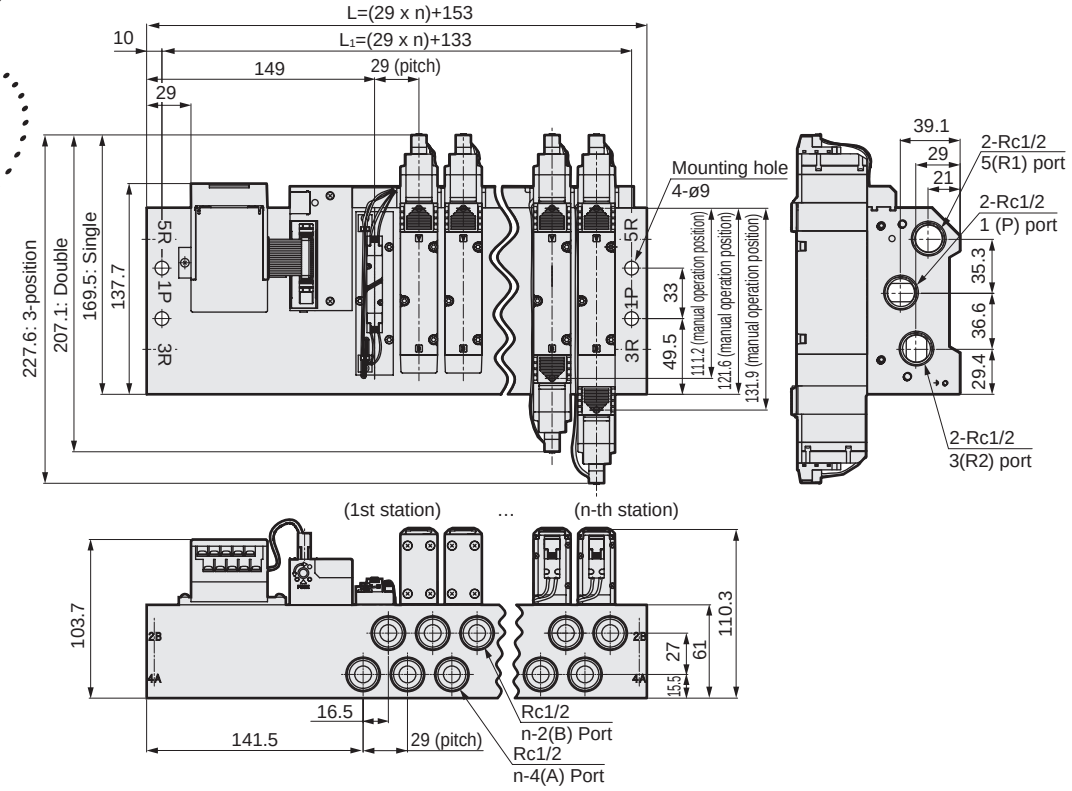

Station No.	2	3	4	5	6	7	8
L	211	240	269	298	327	356	385
L_1	191	220	249	278	307	336	365

Dimensions

M4GB4

● Serial transmission (T6G1)
External pilot (K)

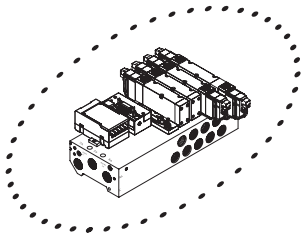

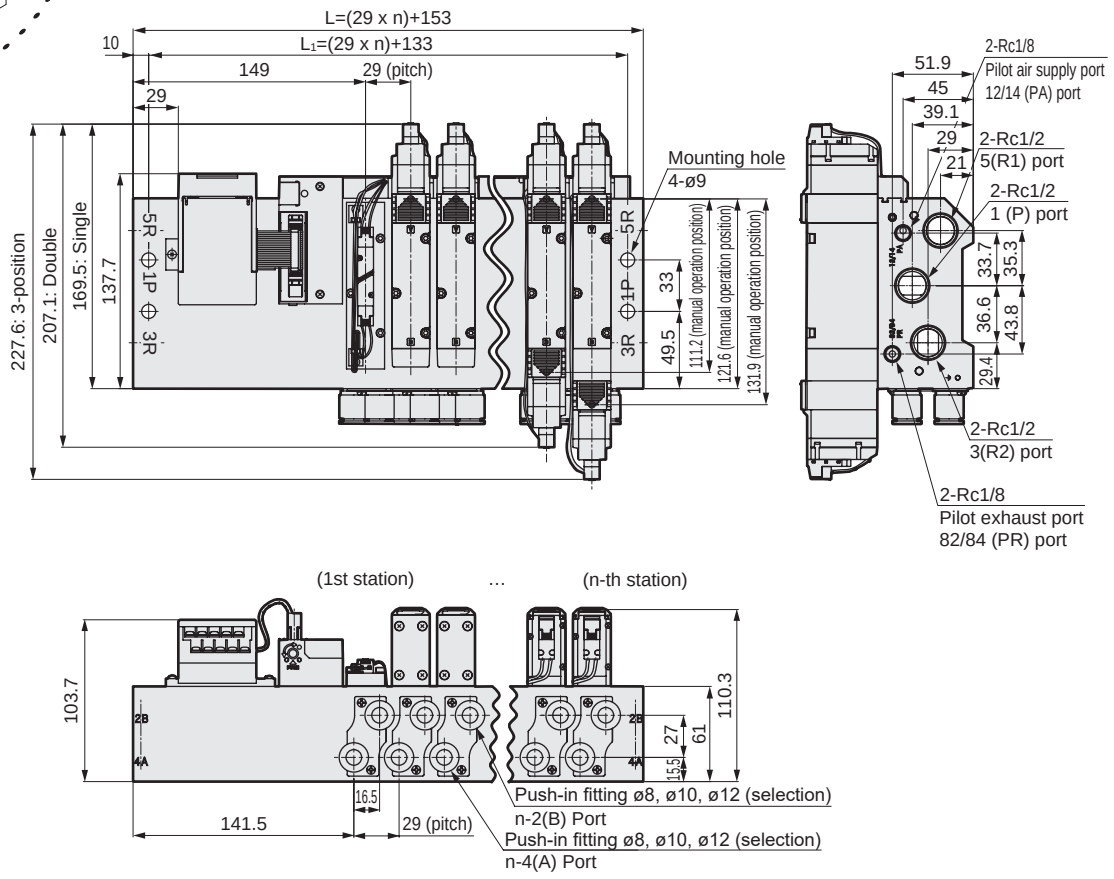

Station No.	2	3	4	5	6	7	8
L	211	240	269	298	327	356	385
L_1	191	220	249	278	307	336	365

Dimensions

M4GB4

● Serial transmission (T6G1)
Supply and exhaust block (Q)

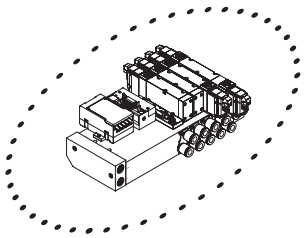

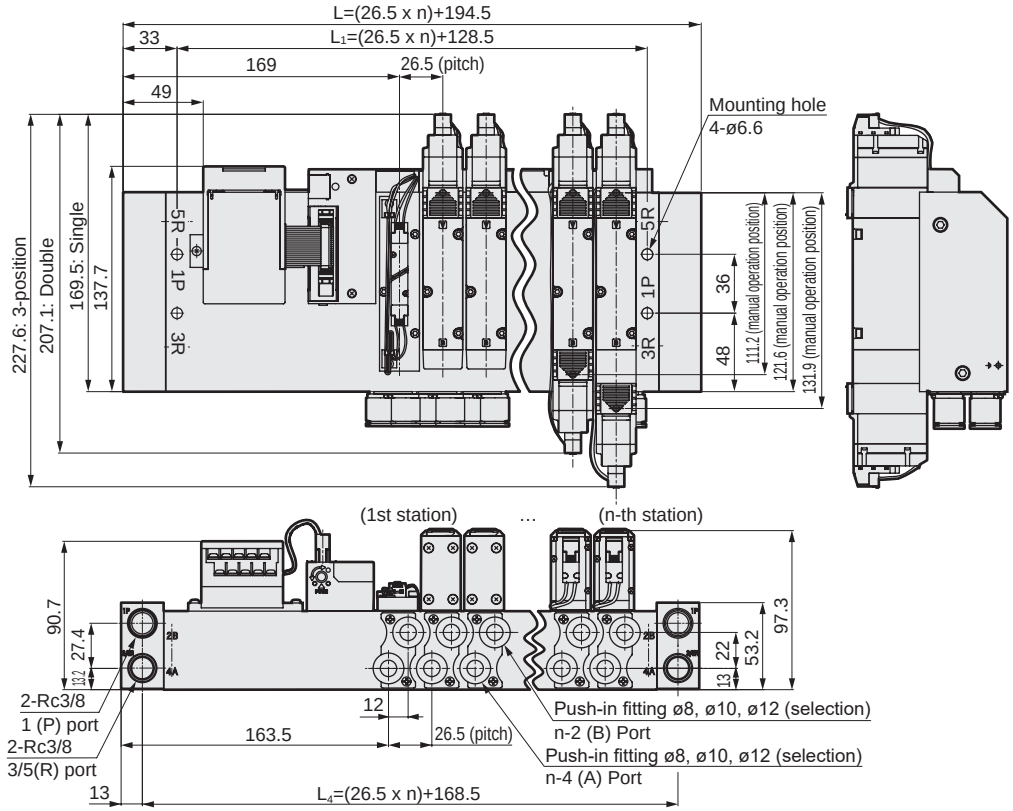

Station No.	2	3	4	5	6	7	8
L	247.5	274	300.5	327	353.5	380	406.5
L_1	181.5	208	234.5	261	287.5	314	340.5
L_4	221.5	248	274.5	301	327.5	354	380.5

● Serial transmission (T6G1)
Rc1/2 female thread (15)
Supply and exhaust block (Q)

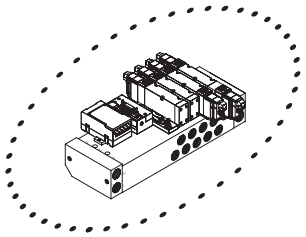

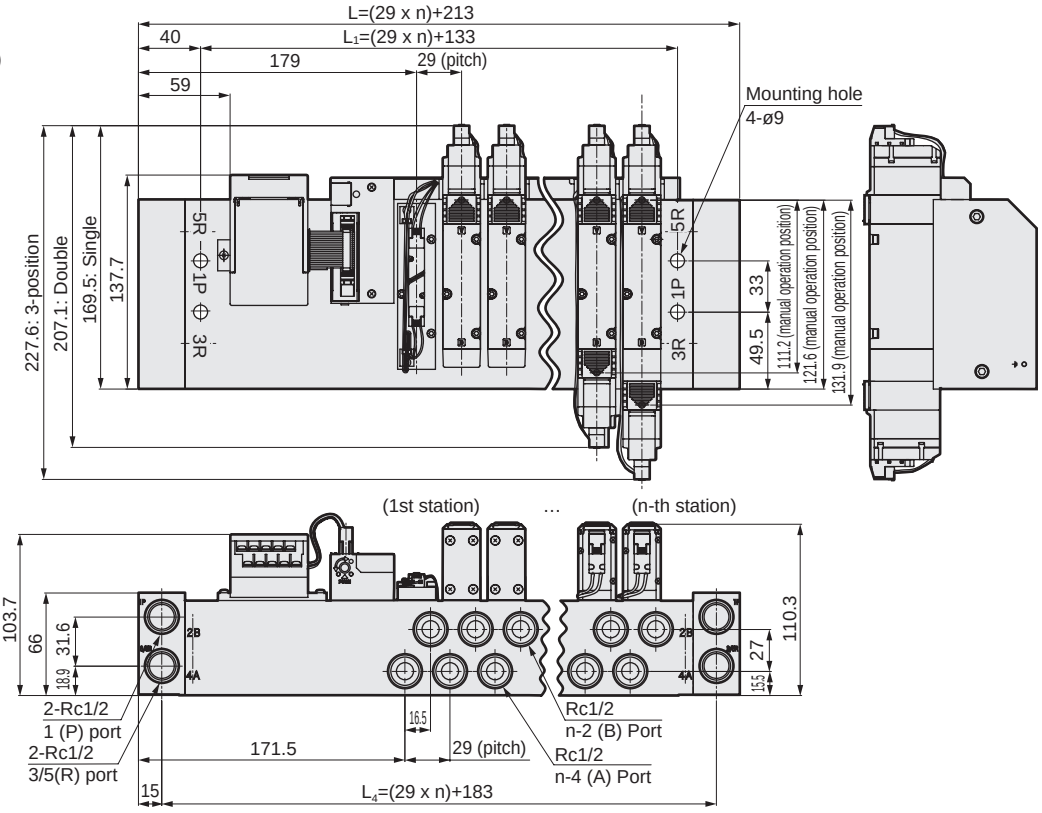

Station No.	2	3	4	5	6	7	8
L	271	300	329	358	387	416	445
L_1	191	220	249	278	307	336	365
L_4	241	270	299	328	357	386	415

Dimensions

M4GB4

● Serial transmission (T6G1)
External pilot (K)
Supply and exhaust block (Q)

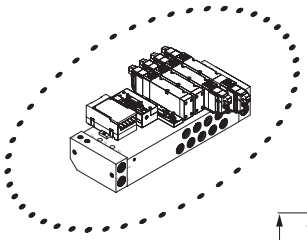

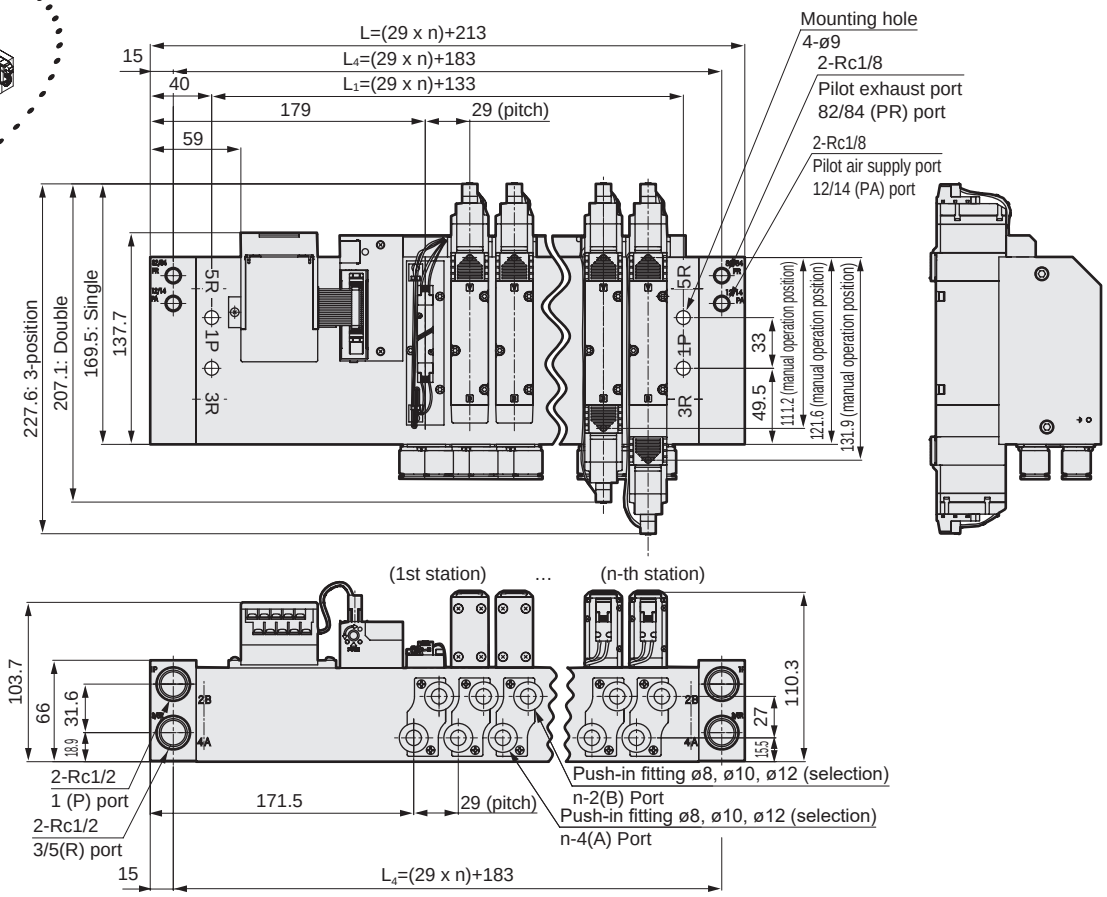

Station No.	2	3	4	5	6	7	8
L	271	300	329	358	387	416	445
L_1	191	220	249	278	307	336	365
L_4	241	270	299	328	357	386	415

Related products

● Air supply spacer

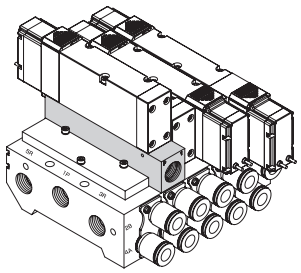

Specifications

Item		4GA4	4GB4	
Flow characteristics	P→A/B	6.4	5.6	(*2)
C[dm³/(s·bar)] (*1)	A/B→R	8.0	6.6	(*2)
Weight	g	208	198	

*1: This is the value when a single solenoid is installed.
*2: This is the value when installing to a manifold base port size Rc3/8.
*3: Effective cross-sectional area S and sonic conductance C are converted as S ≈ 5.0 x C.

How to order discrete units

4GA4 - P - 10

Ⓐ Model No.
Ⓑ Port size

Code	Description	Ⓐ Valve model No. 4GA4	4GB4
Ⓑ **Port size**			
10	Rc3/8	●	●
10G	G3/8	●	●
10N	NPT3/8	●	●

Attachments: 3 mounting screws, 2 O-rings, 1 body gasket

⚠ Precautions for model No. selection

*1: Specify the air supply spacer mounting position and quantity in manifold specifications sheet of each catalog.
*2: Combination with the masking plate is not supported.

Dimensions

● 4GA4

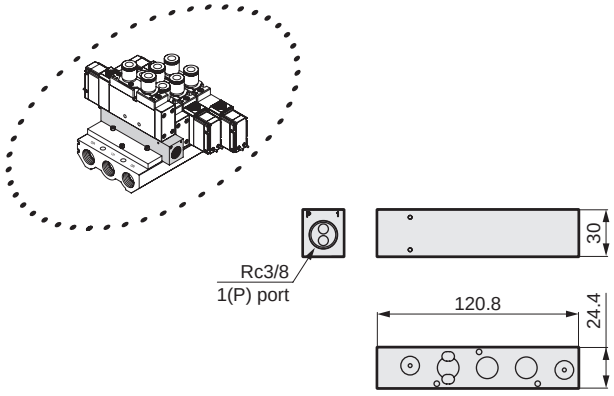

● 4GB4

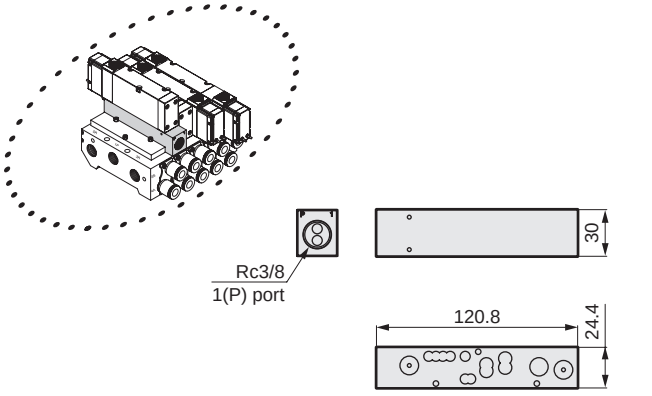

Dimensions when mounted

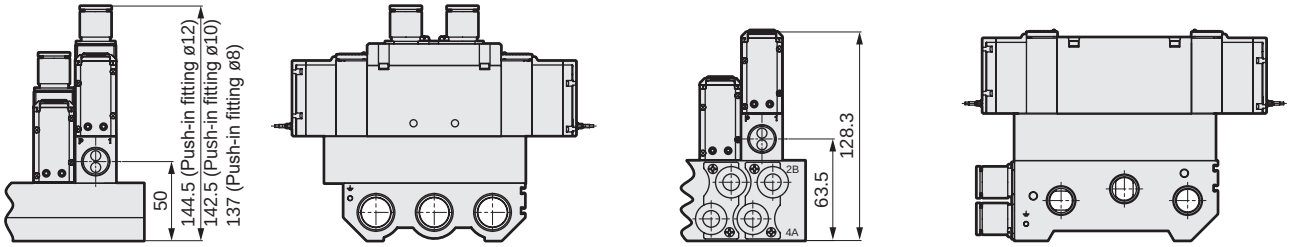

Related products

● Exhaust spacer

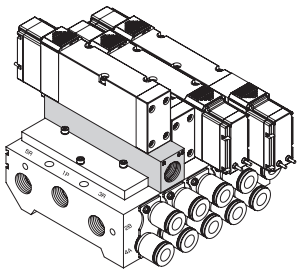

Specifications

Item		4GA4	4GB4	
Flow characteristics	P→A/B	6.3	5.4	(*2)
C[dm³/(s·bar)] (*1)	A/B→R	6.9	5.7	(*2)
Weight	g	206	197	

*1: This is the value when a single solenoid is installed.
*2: This is the value when installing to a manifold base port size Rc3/8.
*3: Effective cross-sectional area S and sonic conductance C are converted as S ≈ 5.0 x C.

How to order discrete units

4GA4 - R - 10

Ⓐ Model No.
Ⓑ Port size

Code	Description	Ⓐ Valve model No. 4GA4	4GB4
Ⓑ Port size			
10	Rc3/8	●	●
10G	G3/8	●	●
10N	NPT3/8	●	●

Attachments: Mounting screw 3, O-ring 2, body gasket 1

⚠ Precautions for model No. selection

*1: Specify the air supply spacer mounting position and quantity in manifold specifications sheet of each catalog.
*2: Combination with the masking plate is not supported.
*3: When mounting an exhaust spacer on the type A or type B manifold (P-port Rc3/8 specifications), connect a push-in fitting.

Dimensions

● 4GA4

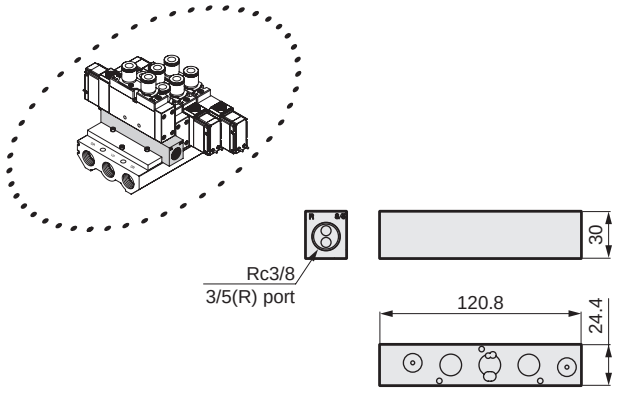

● 4GB4

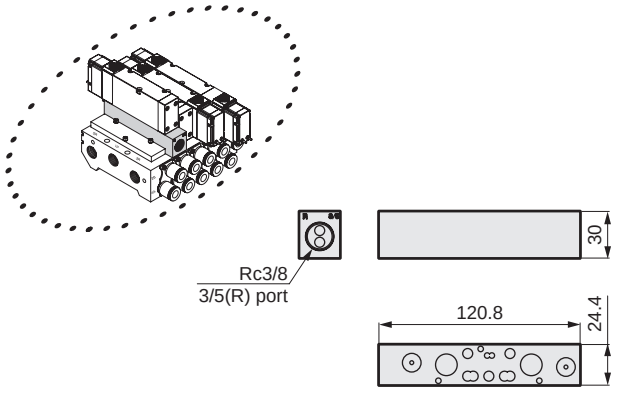

Dimensions when mounted

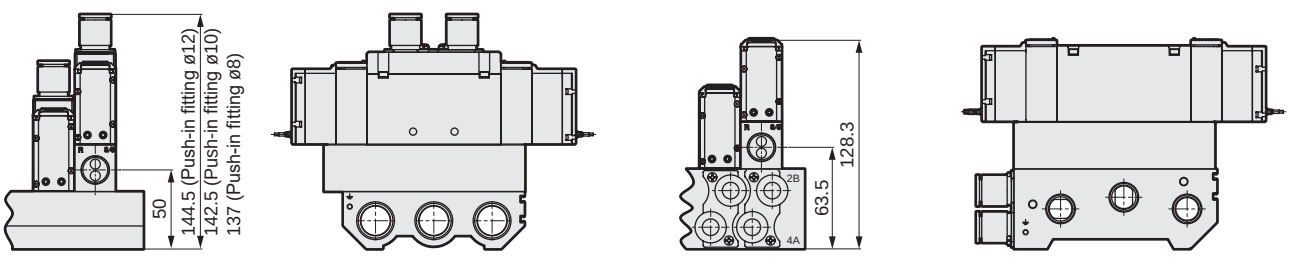

Related products

● Silencer

● SLW- □A, □L

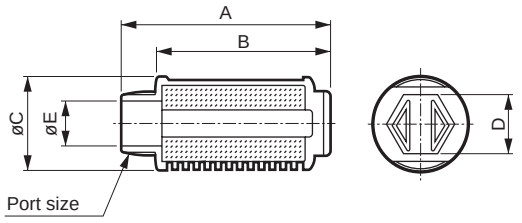

Code / Model No.	Noise reduction effect dB(A)	Eff. X-sectional area mm²	Port size	A	B	C	D	E
SLW-6A	30 or more	10	R1/8	34.5	28	16.5	10	7
SLW-10A	30 or more	30	R3/8	58.5	48.5	25.5	17	12
SLW-10L	30 or more	60	R3/8	68.2	58.4	28	19	12
SLW-15A	30 or more	75	R1/2	71.4	58.4	28	19	15

● SLW-6S

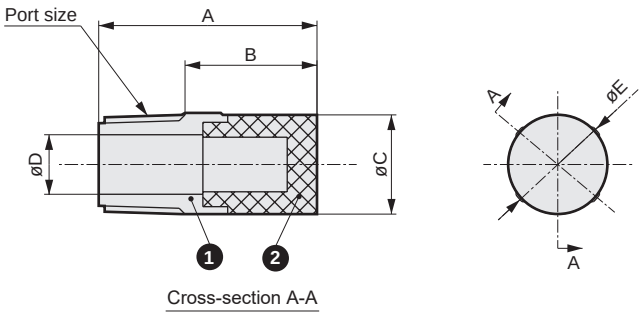

Model No.	Port size	A	B	C	D	E
SLW-6S	R1/8	22	13.3	10.5	6	10.5

* When mounting the silencer, check the dimensions in advance.

● Plug

Part name	Model No.	Compatible bore size	Appearance
Blank plug	GWP8-B	ø8	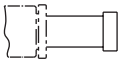
	GWP10-B	ø10	
	GWP12-B	ø12	
Thread plug	4G4-8P	Rc1/4	 Hexagon socket head cap plug
	4G4-10P	Rc3/8	
	4G4-15P	Rc1/2	
	4G4-8NP	NPT1/4	
	4G4-10NP	NPT3/8	
	4G4-15NP	NPT1/2	
	4G4-8GP	G1/4	
	4G4-10GP	G3/8	
	4G4-15GP	G1/2	

Related products

● Masking plate kit (individual wiring)

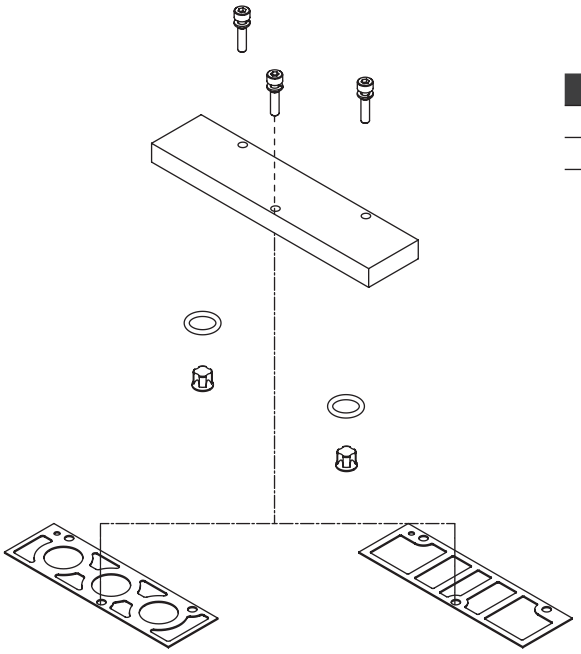

Model	Part model No.
4GA4	4GA4-MP
4GB4	4GB4-MP

* Kit contents: masking plate, gasket (select from A type or B type), mounting screw 3, O-ring 2, check valve 2

● Masking plate kit (reduced wiring)

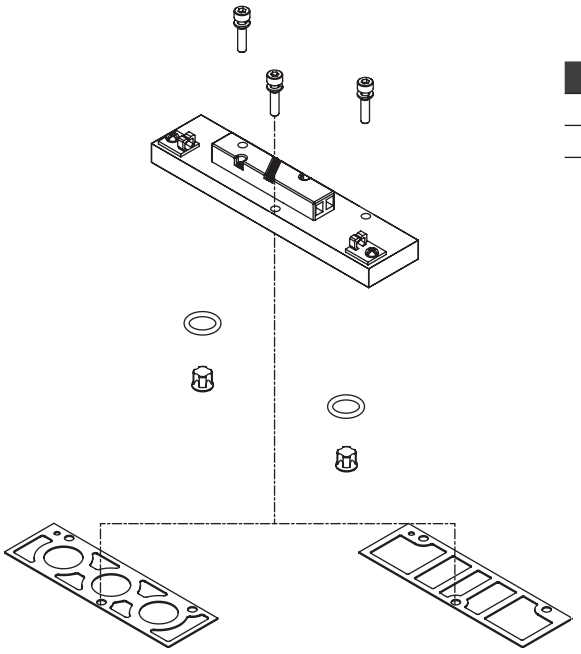

Model	Part model No.
4GA4	4GA4-MPC
4GB4	4GB4-MPC

* Kit contents: masking plate, gasket (select from A type or B type), mounting screw 3, O-ring 2, check valve 2

Parts list

(1) Cartridge push-in fitting and single related parts (1)

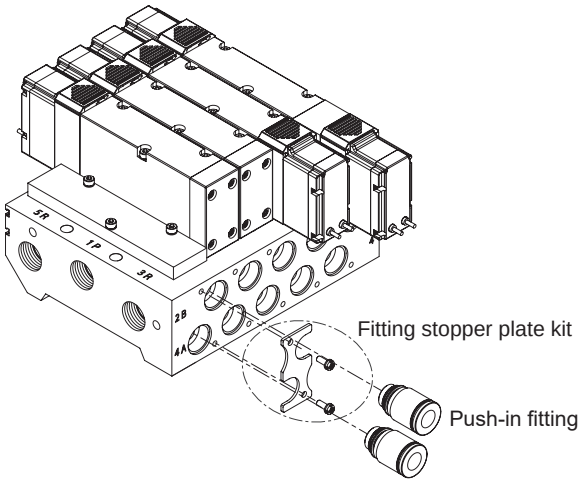

(1)-1 Push-in fitting model No.

Model	Part name	Model No.
4G4	ø8 straight	4G4-JOINT-C8
	ø10 straight	4G4-JOINT-C10
	ø12 straight	4G4-JOINT-C12

(1)-2 Fitting stopper plate kit

Model	Kit model No.
4GA4	4GA4-JNT-STP-PLATE-KIT
4GB4	4GB4-JNT-STP-PLATE-KIT-1 (*1)
	4GB4-JNT-STP-PLATE-KIT-2 (*1)

*1: When the manifold P/R port is Rc3/8, NPT3/8, or G3/8, select "-1".
When the manifold P/R port is Rc1/2, NPT1/2, or G1/2, select "-2".

(2) Adaptor related kit

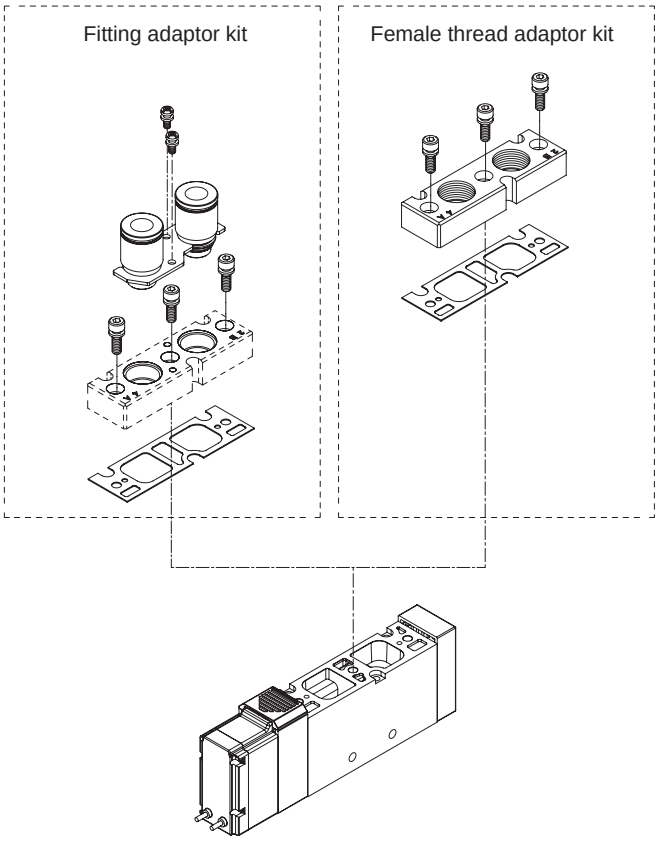

Fitting adaptor kit

Model	Part name	Kit model No.	Set parts
4GA4	ø8 fitting Adaptor kit	4GA4 - JNT - ADAPTOR - KIT - C8 - option	Fitting adaptor 2 Push-in fittings Fitting stopper plate Gasket 2 Set screws 3 Adaptor set screws
	ø10 fitting Adaptor kit	4GA4 - JNT - ADAPTOR - KIT - C10 - option	
	ø12 fitting Adaptor kit	4GA4 - JNT - ADAPTOR - KIT - C12 - option	

Specify the option "F" when using the A/B port filter integrated.

Female thread adaptor kit

Model	Kit model No.	Set parts
4GA4	4GA4 - FML - ADAPTOR - KIT - port size - option	Female thread adaptor, gasket, 3 adaptor set screws

Specify the option "F" when using the A/B port filter integrated.

Parts list

(3) Manifold sub-plate kit individual wiring

● 4GB4 sub-plate

4G4 - SUB - BASE - Port size (*1) - Option

Ⓐ Option

Code	Description
Ⓐ Option	
Blank	
K	External pilot
F	P/A/B port filter integrated

*1: Select from Ⓒ Port size on page 718.

(4) Manifold sub-plate kit individual wiring

● M4GA4 sub-plate

M4GA4 - 00 - - 2

Ⓐ Port size

Ⓑ Option

Ⓒ Station No.

Code	Description
Ⓐ Port size	
00	Rc thread
00N	NPT thread
00G	G thread
Ⓑ Option	
Blank	
K	External pilot
Q	Supply and exhaust block
Ⓒ Station No.	
2	2 stations
to	to
15	Refer to the specifications on page 728 for the max. station number.

● M4GB4 sub-plate: Direct mount

M4GB4 - Port size (*1) **- - 2**

Ⓐ Option

Ⓑ Station No.

Code	Description
Ⓐ Option	
Blank	
K	External pilot
F	A/B port filter built in
Q	Supply and exhaust block
Ⓑ Station No.	
2	2 stations
to	to
15	Refer to the specifications on page 742 for the max. station number.

*1: Select from Ⓒ Port size on page 744.
Note that "CX" cannot be selected.

● M4GB4 sub-plate: DIN rail mount

M4GB4 - Port size (*1) **- QD - 2**

Ⓐ Option

Ⓑ Station No.

Code	Description
Ⓐ Option	
Blank	
F	A/B port filter built in
Ⓑ Station No.	
2	2 stations
to	to
5	5 stations

*1: Select from Ⓒ Port size on page 744.
Note that "CX" cannot be selected.

Parts list

(5) Manifold related parts

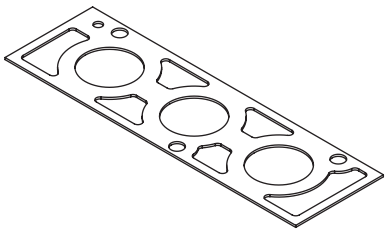

Gasket (4GA4)

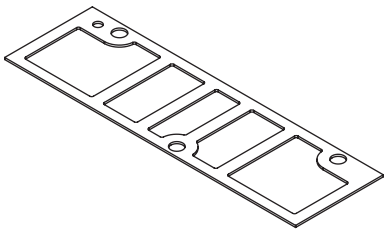

Gasket (4GB4)



PR check valve kit

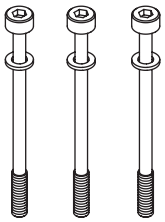

Mounting screw
[for solenoid valve installation]

Gasket

Model	Part model No.
4GA4	4GA4-GASKET
4GB4	4GB4-GASKET

PR check valve kit (2 per set)

Kit model No.
4G4-PR

Mounting screw [for solenoid valve installation] (10 per set)

Part model No.
4G4-SET-SCREW

(6) Lead wire related parts

(1)

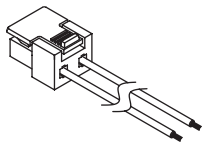

(2)

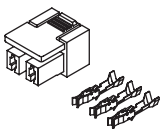

(3)

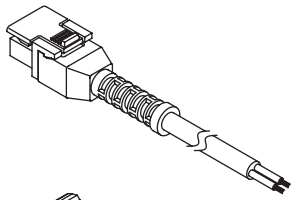

(4)

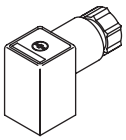

(5)

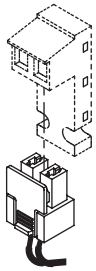

(1)E-connector socket assembly

Part model No.
4GR-SOCKET-ASSY-[*1]-[*2] Lead wire 300mm
4GR-SOCKET-ASSY-[*1]-[*2] Lead wire 500mm
4GR-SOCKET-ASSY-[*1]-[*2] Lead wire 1000mm
4GR-SOCKET-ASSY-[*1]-[*2] Lead wire 2000mm
4GR-SOCKET-ASSY-[*1]-[*2] Lead wire 3000mm

*1 Electrical connections (E0, E00, E01, E02, E03, E2, E20, E21, E22, E23)
*2 Voltage ("3","4", or 24 VDC/12 VDC with red/black lead wire, or "1","5", or 100 VAC/110 VAC with blue lead wire.)

(2)Socket set

Part model No.
4GR-SOCKET-SET

(3)EJ-connector socket assembly

Part model No.
4GR-SOCKET-ASSY-[*1]

*1 Electrical connections (E01J, E02J, E03J, E21J, E22J, E23J)

(4)DIN terminal box

Basic price model No.
4G-TERMINAL-BOX-[*2]

*2 Voltage (1=100 VAC, 3=24 VDC, 4=12 VDC, 5=110 VAC)

(5)A-connector socket assembly

Part model No.
4G4 - SOCKET - ASSY - A** - row No.

MEMO

Technical data ❶ Pneumatic system selection guide

(1) The cylinder average speed is obtained from the combination of 4G4 series and piping system. It is expressed as the cylinder's piston speed calculated by dividing the stroke length by the time that the piston rod takes from start to end of movement with the cylinder rod installed facing upward. When the load factor is 50%, the average speed should be approximately the cylinder's piston speed multiplied by 0.5.
(2) The cylinder average speed described in "Pneumatic system device selection guide" is that when one cylinder is operated alone.
(3) The effective cross-sectional area of the solenoid valve used for the calculation below is the 2-position value.
(4) This selection guide is for reference. With the CKD sizing program, confirm conditions to be actually used.
(5) Effective cross-sectional area S and sonic conductance C are converted as S ≈ 5.0 x C.

Standard system table

Valve	System No.	Speed controller	Silencer	Piping	Composite effective cross-sectional area (mm^2) pipe length 1 m
4GA410	C2	SC1-10	SLW-8A	ø10xø7.2	12.3
4GB410	C3	SC1-10	SLW-10A	Rc3/8 steel pipe	15.9
	C4	SC1-15	SLW-15A	Rc1/2 steel pipe	24.8

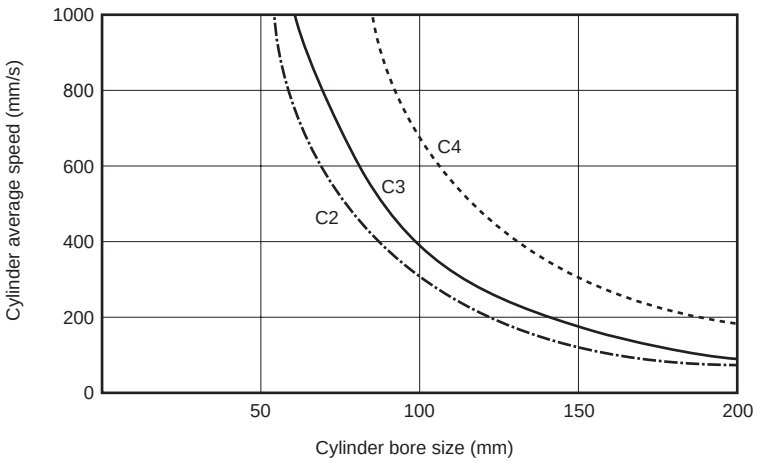

How to use the guide

Device selection guide is used to select the optimum model at a glance.

● Fluid control components selection

Whether the cylinder bore size and cylinder being used are driven with relative high or low speed is determined as a condition. Using the table shown below as a reference, select the theoretical reference speed of the cylinder.

Degree of cylinder speed	Theoretical reference speed (mm/s)
Low speed	250
Medium speed	500
High speed	750
Ultra high speed	1,000

Using the table in the device selection guide 1 (next page), select the equivalent bore size of cylinder tube and the proper standard system No. corresponding to theoretical reference speed.

Explanation of technical terms

● Theoretical reference speed: indicates degree of cylinder speed, expressed as the following formula. (This value matches speed with no load. When load is applied, speed drops considerably.)

$$vo=1920 \times \frac{S}{A} = 2445 \times \frac{S}{D^2} \quad (1)$$

vo : Theoretical reference speed (mm/s)
A : Cylinder sectional area (cm^2)
S : Composite effective cross-sectional area of circuit (exhaust air side) (mm^2)
D : Cylinder bore size (cm)

When expressed as a graph, the theoretical reference speed is the speed within the range where the cylinder moves at a uniform speed:

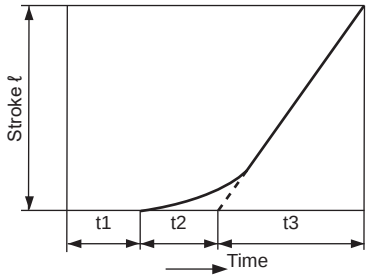

$$vo=\frac{\ell}{t3}(A/s)$$

t1 : Time until movement starts
t2 : Time of primary delay
t3 : Operating time with constant velocity
ℓ : Stroke length

● Note: t1 and t2 differ depending on load.
Can be effectively ignored with no load.

● Required flow rate: indicates instantaneous flow rate for operating a cylinder with velocity *vo*, expressed with the following formula. Values in the table are when P = 0.5 MPa. The required flow rate is a value necessary to select clean air system components.

$$Q=\frac{Avo(P+0.101)x60}{0.101x10^4}=\left\{\frac{Avo(P+1.03)x60}{1.03x10^4}\right\} \quad (2)$$

Q : Required flow rate (ℓ/min)(ANR)
P : Supply pressure (MPa)

● Required effective sectional area: indicates composite effective cross sectional area for the exhaust circuit required for moving the cylinder at speed *vo*. (Composite effective sectional area of valve, speed controller, silencer or piping) Effective cross-sectional area S and sonic conductance C are converted as S ≈ 5.0 x C.

● Proper standard system: indicates the most appropriate combination of valve, speed controller, silencer and bore size for operating a cylinder with velocity *vo*. The combination in the table is for a pipe length of 1 m.

Calculation method of flow rate

Depending on the actual unit, they are shown as follows.

Choked flow when $\frac{P_2+0.1}{P_1+0.1} \le b$

$$Q=600xC(P_1+0.1)\sqrt{\frac{293}{273+t}} \quad (1)$$

Subsonic flow when $\frac{P_2+0.1}{P_1+0.1} > b$

$$Q=600xC(P_1+0.1)\sqrt{1-\left[\frac{\frac{P_2+0.1}{P_1+0.1}-b}{1-b}\right]^2}\sqrt{\frac{293}{273+t}} \quad (2)$$

Q : Air flow rate [dm^3/min(ANR)], SI unit dm^3 (cubic decimeter) can also be expressed with ℓ (liter). 1 dm^3 = 1 ℓ
C : Sonic conductance [dm^3/(s·bar)]
b : Critical pressure ratio [-]
P_1 : Upstream pressure [MPa]
P_2 : Downstream pressure [MPa]
t : Temperature (°C)

When calculating with effective cross-sectional area S, substitute value C obtained with C = S/5 in the above formula.
For subsonic flow, substitute b = 0.5 in formula (2).

[Device selection guide 1]

Cylinder bore size (mm)	Theoretical reference speed (mm/s)	Required flow rate (ℓ/min)(ANR)	Required effective sectional area (mm^2)	System No. Exhaust with silencer
ø50	250	175	2.6	A
	500	350	5.1	B
	750	526	7.7	C1
	1000	701	10.2	C2
ø63	250	278	4.1	B
	500	556	8.1	C2
	750	834	12.2	C2
	1000	1112	16.2	C3
ø80	250	448	6.5	C1
	500	897	13.1	C2
	750	1345	19.6	C3
	1000	1794	26.2	C4
ø100	250	701	10.2	C2
	500	1401	20.4	C3
	750	2102	30.7	C4
	1000	2803	40.9	D1
ø125	250	1095	16.0	C3
	500	1401	31.9	C4
	750	2102	47.9	D1
	1000	2803	63.9	D2
ø140	250	1373	20.0	C3
	500	2747	40.1	D1
	750	4120	60.1	D1
	1000	5493	80.1	D3
ø160	250	1794	26.2	C4
	500	3587	52.3	D1
	750	5381	78.5	D3
	1000	7175	104.7	D3

* Refer to page 804 for system No.

[Effective cross-sectional area]

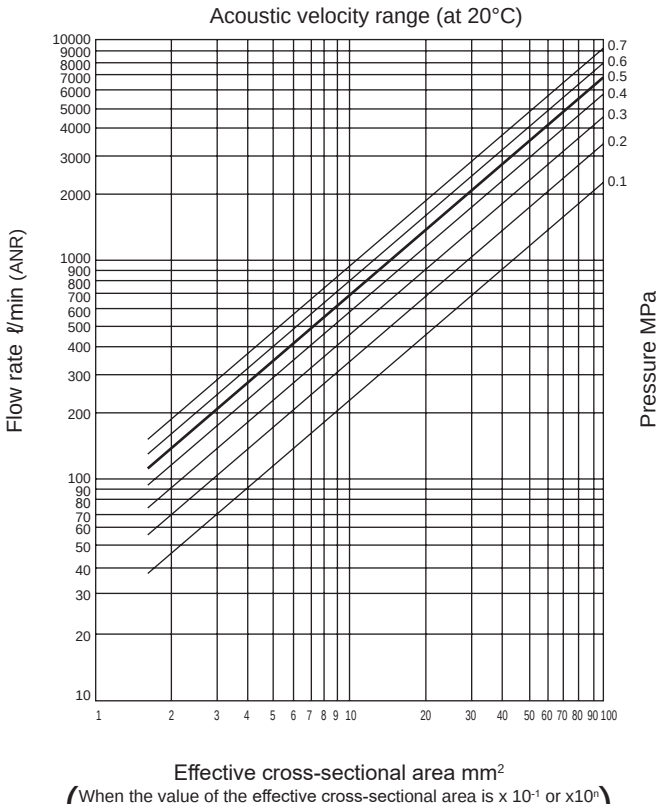

[Clean air system components]

Clean air system components

Part name	Model No.	Port size	Max. flow rate (ℓ/min atmospheric pressure conversion)
F/R/L kit	C1000-6-W	Rc1/8	450
	C1000-8-W	Rc1/4	630
	C3000-8-W	Rc1/4	1280
	C3000-10-W	Rc3/8	1750
	C4000-8-W	Rc1/4	1430
	C4000-10-W	Rc3/8	2400
	C4000-15-W	Rc1/2	3000
	C6500-20-W	Rc3/4	4500
	C6500-25-W	Rc1	5000
	C8000-20-W	Rc3/4	7000
	C8000-25-W	Rc1	7500
F/R Unit	W1000-6-W	Rc1/8	800
	W1000-8-W	Rc1/4	1150
	W3000-8-W	Rc1/4	2150
	W3000-10-W	Rc3/8	2430
	W4000-8-W	Rc1/4	2500
	W4000-10-W	Rc3/8	4350
	W4000-15-W	Rc1/2	4750
	W8000-20-W	Rc3/4	10000
	W8000-25-W	Rc1	10000
Air filter (F)	F1000-6-W	Rc1/8	460
	F1000-8-W	Rc1/4	610
	F3000-8-W	Rc1/4	1230
	F3000-10-W	Rc3/8	1500
	F4000-8-W	Rc1/4	1320
	F4000-10-W	Rc3/8	2140
	F4000-15-W	Rc1/2	3000
	F6000-20-W	Rc3/4	5600
	F6000-25-W	Rc1	6200
	F8000-20-W	Rc3/4	6400
	F8000-25-W	Rc1	6800

Part name	Model No.	Port size	Max. flow rate (ℓ/min atmospheric pressure conversion)
Regulator (R)	R1000-6-W	Rc1/8	770
	R1000-8-W	Rc1/4	1350
	R3000-8-W	Rc1/4	2000
	R3000-10-W	Rc3/8	2600
	R4000-8-W	Rc1/4	2500
	R4000-10-W	Rc3/8	4400
	R4000-15-W	Rc1/2	5000
	R6000-20-W	Rc3/4	7000
	R6000-25-W	Rc1	7700
	R8000-20-W	Rc3/4	14000
	R8000-25-W	Rc1	11000
Lubricator (L)	L1000-6-W	Rc1/8	550
	L1000-8-W	Rc1/4	700
	L3000-8-W	Rc1/4	1100
	L3000-10-W	Rc3/8	2250
	L4000-8-W	Rc1/4	1000
	L4000-10-W	Rc3/8	1700
	L4000-15-W	Rc1/2	2700
	L8000-20-W	Rc3/4	6300
	L8000-25-W	Rc1	10000

* Note) Max. flow rate: For FRL, FR and R, flow rate at 0.7 MPa primary pressure, 0.5 MPa set pressure, 0.1 MPa pressure drop. For air filter, flow rate at 0.7 MPa primary pressure, 0.02 MPa pressure drop. For lubricator, flow rate at 0.5 MPa primary pressure, 0.03 MPa pressure drop.

MEMO

M4GA4/M4GB4 Series

How to fill out metal base M4G4 series manifold specifications sheet

● Manifold model No. (example)

M4G(A/B)4 [8] 0- [CX] - [T30] [ ] [ ] - [9] - [3]

Solenoid position	Port size	Reduced wiring connection	Terminal/connector pin array	Option	Station No.	Voltage

Precautions for fitting mix CX

The A/B port fitting can be selected freely by indicating “CX” in the port size area.
(Note) The M4GA4 is not supported.

Selectable cartridge fittings

4G4:C8, C10, C12

For female thread specifications, indicate the required number of plugs in the “Thread plug” area at the end.
Female threads and cartridge fitting cannot be used together in one manifold set.

Solenoid valve model No.	Fitting CX A	Fitting CX B	Valve installation position 1	2	3	4	5	6	7	8	9	10	11	12	13	14	15	16	17	18	19	20	21	22	23	24	Quantity
4GB419-C8			○	○																							2
4GB429-C8					○	○																					2
4GB439-C8							○	○																			2
4GB459-CX	C8	C10							○	○																	2
4G 4 9-																											
Masking plate 4GB4-MP(S)											○																1
Masking plate 4G 4-MP(D)																											
Air supply spacer 4G 4-P-																											
Exhaust spacer 4G 4-R-																											

Fill in "CX" when changing the fitting combination

Accessory	Blanking plug			Silencer		
	GWP8-B	GWP10-B	GWP12-B	SLW-6	SLW-10	SLW-15
	Thread plug			Cable with D sub-connector	N4T-CABLE-D -	
	4G4-8 P	4G4-10 P	4G4-15 P			

From the manifold specifications sheet for each model, select and fill out the appropriate form.

● Individual wiring: Page 810

● Reduced wiring
· Common terminal block (T1*), D sub-connector (T30) : Page 811
· Flat cable connector (T5*) : Page 812
· Serial transmission (T6G1) : Page 813

How to fill out wiring specifications sheet

Not required for standard wiring and double wiring.

● Wiring specifications sheet (example)

Complete these specifications when specifying the wiring order and additional cables.

Connector pin No.		Installation position																
T30/T30R	T50/T50R/T6*	1	2	3	4	5	6	7	8	9	10	11	12	13	14	15	16	17
1	1	a																
14	2		a															
2	3			a														
15	4			(b)														
3	5				a													
16	6				(b)													
4	7					a												
17	8					b												
5	9 - Power supply						a											
18	10 + (COM) Power supply						b											
6	11							a										
19	12							b										
7	13								a									
20	14								b									
8	15									a								
21	16									b								
9	17																	
22	18																	
10	19 - Power supply																	
23	20 + (COM) Power supply																	
11																		
24																		
12																		
25																		
13 (COM)																		

Spare cable wiring precautions (1)

Spare cable wiring precautions (2)

* Note that when T50 wiring is used, the COM polarity is + (plus).
* When T50 wiring is used, connector pin numbers 9, 10, 19, and 20 cannot be specified, because they are used for the external input power supply.

Precautions regarding spare wiring

(1) With the T30/T50/T51 as it is possible for the unit to be equipped with spare wiring in advance to permit modification from a single Sol to a double Sol, consult CKD.

Specify the position for expansion (modification area from single to double Sol).

Mark a circle in the wiring specification column as an indication of spare wiring, while also filling in the a sol side/b sol side categories.

(2) Spare wiring will be installed on the masking plate. (Refer to page 836)

The number of wires for spare wiring can be specified by selecting the masking plate within the specifications sheet.

(* When not specified, the spare wiring will be 2 wires (MPD).)

4G*4-MP(S) - 1 wire

4G*4-MP(D) - 2 wires

Reference circuit diagram

The simplified circuit diagram of the manifold model No. (example) on the previous page is shown below.

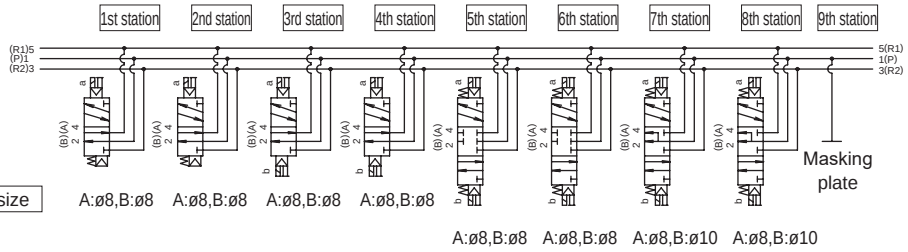

Port size

A:ø8,B:ø8 A:ø8,B:ø8 A:ø8,B:ø8 A:ø8,B:ø8 A:ø8,B:ø8 A:ø8,B:ø8 A:ø8,B:ø10 A:ø8,B:ø10

* The manifold station numbers are set in order from the left with the piping port facing forward.

Individual wiring

M4G$^{A}_{B}$4 Manifold specifications sheet

Issued / /

Company

Contact

Order No.

● Contact ● Quantity Set ● Delivery date /

Slip No.	Order No.

● Manifold model No.

M4G$^{A}_{B}$4 [ ] 0- [ ] - [ ][ ][ ] - [ ] - [ ]

Solenoid position / Port size / Electrical connections / Option / Mount / Station No. / Voltage

Solenoid valve model No.	Fitting CX		Valve installation position																								Quantity
	A	B	1	2	3	4	5	6	7	8	9	10	11	12	13	14	15	16	17	18	19	20	21	22	23	24	
4G [ ] 4 [ ] 9- [ ]																											
4G [ ] 4 [ ] 9- [ ]																											
4G [ ] 4 [ ] 9- [ ]																											
4G [ ] 4 [ ] 9- [ ]																											
4G [ ] 4 [ ] 9- [ ]																											
Masking plate 4G [ ] 4-MP																											
Air supply spacer 4G [ ] 4-P- [ ]																											
Exhaust spacer 4G [ ] 4-R- [ ]																											

Mounting rail	L_2= [ ]	Accessory	Blanking plug						Silencer					
			GWP8-B [ ]		GWP10-B [ ]		GWP12-B [ ]		SLW-6 [ ]		SLW-10 [ ]		SLW-15 [ ]	
			Thread plug											
			4G4-8 [ ] P		4G4-10 [ ] P		4G4-15 [ ] P							

Reduced wiring

M4G$^{A}_{B}$4-T1/3 Manifold specifications sheet

Issued / /

Company

Contact

Order No.

● Contact ● Quantity Set ● Delivery date /

Slip No.	Order No.

● Manifold model No.

M4G$^{A}_{B}$4 [ ] 0- [ ] - [ ] [ ] [ ] - [ ] - [ ]

Solenoid position / Port size / Reduced wiring connection / Terminal/connector pin array / Option / Station No. / Voltage

Solenoid valve model No.	Fitting CX		Valve installation position																							Quantity
	A	B	1	2	3	4	5	6	7	8	9	10	11	12	13	14	15	16	17	18	19	20	21	22	23	24	
4G [ ] 4 [ ] 9- [ ]																											
4G [ ] 4 [ ] 9- [ ]																											
4G [ ] 4 [ ] 9- [ ]																											
4G [ ] 4 [ ] 9- [ ]																											
4G [ ] 4 [ ] 9- [ ]																											
Masking plate 4G [ ] 4-MP(S)																											
Masking plate 4G [ ] 4-MP(D)																											
Air supply spacer 4G [ ] 4-P- [ ]																											
Exhaust spacer 4G [ ] 4-R- [ ]																											

Accessory	Blanking plug			Silencer		
	GWP8-B [ ]	GWP10-B [ ]	GWP12-B [ ]	SLW-6 [ ] [ ]	SLW-10 [ ] [ ]	SLW-15 [ ] [ ]
	Thread plug			Cable with D sub-connector	N4T-CABLE-D [ ] - [ ]	
	4G4-8 [ ] P	4G4-10 [ ] P	4G4-15 [ ] P			

● Wiring specifications sheet (Not required for standard wiring/double wiring. Complete these specifications when specifying the wiring order and additional cables)

Connector pin No.			Installation position																						
T10/T10R	T11/T11R	T30/T30R	1	2	3	4	5	6	7	8	9	10	11	12	13	14	15	16	17	18	19	20	21	22	23	24
1	1	1																								
2	2	14																								
3	3	2																								
4	4	15																								
5	5	3																								
6	6	16																								
7	7	4																								
8	8	17																								
9	9	5																								
10	10	18																								
11	11	6																								
12	12	19																								
13	13	7																								
14	14	20																								
COM	15	8																								
COM	16	21																								
	17	9																								
	18	22																								
	19	10																								
	20	23																								
	21	11																								
	22	24																								
	23	12																								
	24	25																								
	COM	13 (COM)																								
	COM																									

Reduced wiring

M4G$^{A}_{B}$4-T5 Manifold specifications sheet

Issued / /

Company

Contact

Order No.

● Contact ● Quantity Set ● Delivery date /

Slip No.	Order No.

● Manifold model No.

M4G$^{A}_{B}$4 [ ] 0- [ ] - [ ] [ ] [ ] - [ ] - [ ]

Solenoid position / Port size / Reduced wiring connection / Terminal/connector pin array / Option / Station No. / Voltage

Solenoid valve model No.	Fitting CX		Valve installation position																							Quantity
	A	B	1	2	3	4	5	6	7	8	9	10	11	12	13	14	15	16	17	18	19	20	21	22	23	24	
4G [ ] 4 [ ] 9- [ ]																											
4G [ ] 4 [ ] 9- [ ]																											
4G [ ] 4 [ ] 9- [ ]																											
4G [ ] 4 [ ] 9- [ ]																											
4G [ ] 4 [ ] 9- [ ]																											
Masking plate 4G [ ] 4-MP(S)																											
Masking plate 4G [ ] 4-MP(D)																											
Air supply spacer 4G [ ] 4-P- [ ]																											
Exhaust spacer 4G [ ] 4-R- [ ]																											

Accessory	Blanking plug			Silencer		
	GWP8-B	GWP10-B	GWP12-B	SLW-6 [ ]	SLW-10 [ ]	SLW-15 [ ]
	Thread plug					
	4G4-8 [ ] P	4G4-10 [ ] P	4G4-15 [ ] P			

● Wiring specifications sheet (Not required for standard wiring/double wiring. Complete these specifications when specifying the wiring order and additional cables)

Connector pin No.				Installation position																							
T50/T50R	T51/T51R	T52/T52R	T53/T53R	1	2	3	4	5	6	7	8	9	10	11	12	13	14	15	16	17	18	19	20	21	22	23	24
1	1	1	1																								
2	2	2	2																								
3	3	3	3																								
4	4	4	4																								
5	5	5	5																								
6	6	6	6																								
7	7	7	7																								
8	8	8	8																								
9- Power supply	9	9 COM	9																								
10 + (COM) Power supply	10	10 COM	10																								
11	11		11																								
12	12		12																								
13	13		13																								
14	14		14																								
15	15		15																								
16	16		16																								
17	17		17																								
18	18		18																								
19- Power supply	19 COM		19																								
20 + (COM) Power supply	20 COM		20																								
			21																								
			22																								
			23																								
			24																								
			25 COM																								
			26 COM																								

* Note that when T50 wiring is used, the COM polarity is + (plus).

* When T50 wiring is used, connector pin numbers 9, 10, 19, and 20 cannot be specified, because they are used for the external input power supply.

Serial transmission

M4G$^{A}_{B}$4-T6G1 Manifold specifications sheet

Issued / /

Company

Contact

Order No.

● Contact ● Quantity Set ● Delivery date /

Slip No.	Order No.

● Manifold model No.

M4G$^{A}_{B}$4 ☐ 0- ☐ - T6G1 ☐ ☐ - ☐ - ☐

Solenoid position / Port size / Serial transmission / Terminal/connector pin array / Option / Station No. / Voltage

Solenoid valve model No.	Fitting CX		Valve installation position																							Quantity
	A	B	1	2	3	4	5	6	7	8	9	10	11	12	13	14	15	16	17	18	19	20	21	22	23	24	
4G ☐ 4 ☐ 9- ☐																											
4G ☐ 4 ☐ 9- ☐																											
4G ☐ 4 ☐ 9- ☐																											
4G ☐ 4 ☐ 9- ☐																											
4G ☐ 4 ☐ 9- ☐																											
Masking plate 4G ☐ 4-MP(S)																											
Masking plate 4G ☐ 4-MP(D)																											
Air supply spacer 4G ☐ 4-P- ☐																											
Exhaust spacer 4G ☐ 4-R- ☐																											

Accessory	Blanking plug			Silencer		
	GWP8-B ☐	GWP10-B ☐	GWP12-B ☐	SLW-6 ☐ ☐	SLW-10 ☐ ☐	SLW-15 ☐ ☐
	Thread plug					
	4G4-8 ☐ P ☐	4G4-10 ☐ P ☐	4G4-15 ☐ P ☐			

● Wiring specifications sheet (Not required for standard wiring/double wiring. Complete these specifications when specifying the wiring order and additional cables)

Connector pin No.		Installation position															
T6G1		1	2	3	4	5	6	7	8	9	10	11	12	13	14	15	16
T6G1: CC-Link 16 points	1																
	2																
	3																
	4																
	5																
	6																
	7																
	8																
	9																
	10 COM																
	11																
	12																
	13																
	14																
	15																
	16																
	17																
	18																
	19																
	20 COM																

MEMO

MEMO

Common terminal box (wiring method T10)

Notes on wiring

[Precautions for common terminal box (T10)]

(1) With the common terminal box, the common wiring is internally processed beforehand.
When using the independent contact PLC output unit, wire the common wires at the contact section.
(2) Check the correspondence of the number of stations with solenoid positions to prevent incorrect wiring.
(Refer to the table below.)
(3) Note that the correspondence will not function if the number of solenoid stations exceeds 16.
(4) The manifold station numbers are set in order from left with the piping port facing forward.
(5) A voltage drop may occur due to simultaneous energizing or cable length. Confirm that the voltage drop for the solenoid is within 10% of the rated voltage.

Internal wiring of wiring method T10 (up to 16 solenoid stations)

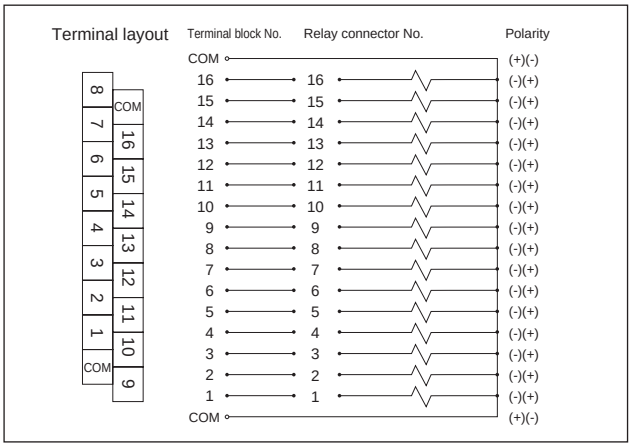

T10 (left side specifications)

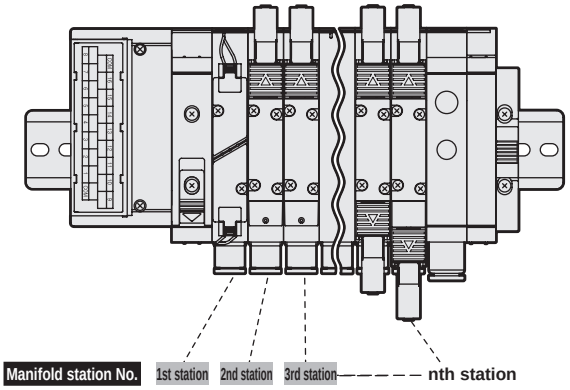

T10R (right side specifications)

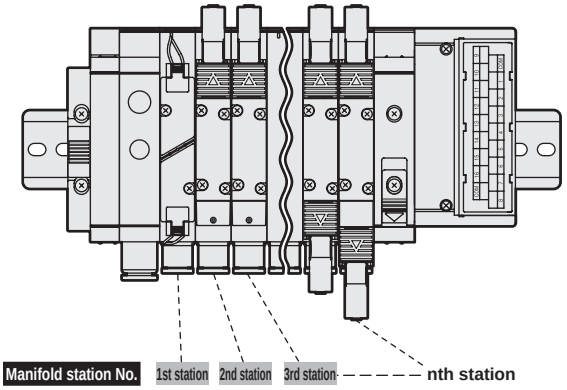

Terminal array of wiring method T10 (example)

*: The numerals of valve numbers 1a, 1b, 2a, 2b ... indicate the order of stations first station, second station... and the letters “a” and “b” indicate the “a side” solenoid and “b side” solenoid, respectively.
The manifold’s max. station number differs depending on the model.
Check the specifications of each model.

Terminal No.

COM	16	15	14	13	12	11	10	9
8	7	6	5	4	3	2	1	COM

● For single solenoid valve

[Standard wiring]

Terminal block No.	16	15	14	13	12	11	10	9
Valve No.	16a	15a	14a	13a	12a	11a	10a	9a
Terminal block No.	8	7	6	5	4	3	2	1
Valve No.	8a	7a	6a	5a	4a	3a	2a	1a

[Double wiring]

Terminal block No.	16	15	14	13	12	11	10	9
Valve No.	(Blank)	8a	(Blank)	7a	(Blank)	6a	(Blank)	5a
Terminal block No.	8	7	6	5	4	3	2	1
Valve No.	(Blank)	4a	(Blank)	3a	(Blank)	2a	(Blank)	1a

● For double solenoid valve

Terminal block No.	16	15	14	13	12	11	10	9
Valve No.	8b	8a	7b	7a	6b	6a	5b	5a
Terminal block No.	8	7	6	5	4	3	2	1
Valve No.	4b	4a	3b	3a	2b	2a	1b	1a

Terminal block No.	16	15	14	13	12	11	10	9
Valve No.	8b	8a	7b	7a	6b	6a	5b	5a
Terminal block No.	8	7	6	5	4	3	2	1
Valve No.	4b	4a	3b	3a	2b	2a	1b	1a

● For mixed use (single/double mixture)

Terminal block No.	16	15	14	13	12	11	10	9
Valve No.	11b	11a	10a	9a	8a	7b	7a	6a
Terminal block No.	8	7	6	5	4	3	2	1
Valve No.	5b	5a	4b	4a	3b	3a	2a	1a

Terminal block No.	16	15	14	13	12	11	10	9
Valve No.	(Blank)	8a	7b	7a	(Blank)	6a	5b	5a
Terminal block No.	8	7	6	5	4	3	2	1
Valve No.	4b	4a	3b	3a	(Blank)	2a	(Blank)	1a

Common terminal box (wiring method T11)

Notes on wiring

[Precautions for common terminal box (T11)]

(1) With the common terminal box, the common wiring is internally processed beforehand.
When using the independent contact PLC output unit, wire the common wires at the contact section.
(2) Check the correspondence of the number of stations with solenoid positions to prevent incorrect wiring.
(Refer to the table below.)
(3) Note that the correspondence will not function if the number of solenoid stations exceeds 24.
(4) The manifold station numbers are set in order from left with the piping port facing forward.
(5) A voltage drop may occur due to simultaneous energizing or cable length. Confirm that the voltage drop for the solenoid is within 10% of the rated voltage.

Internal wiring of wiring method T11 (up to 24 solenoid stations)

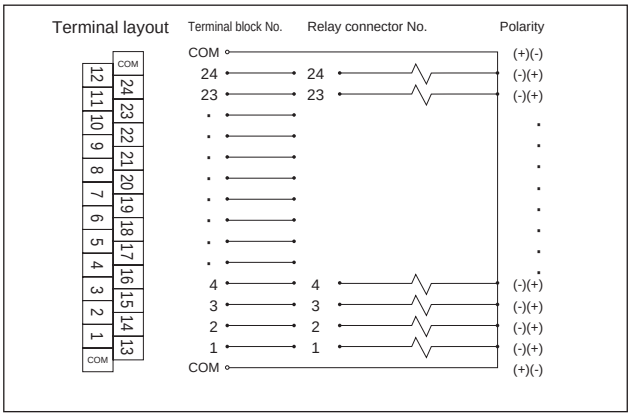

T11 (left side specifications)

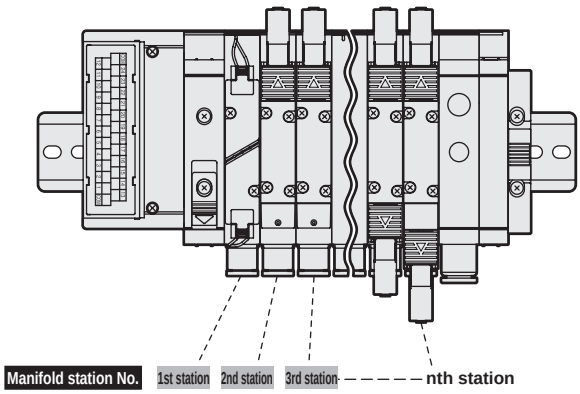

T11R (right side specifications)

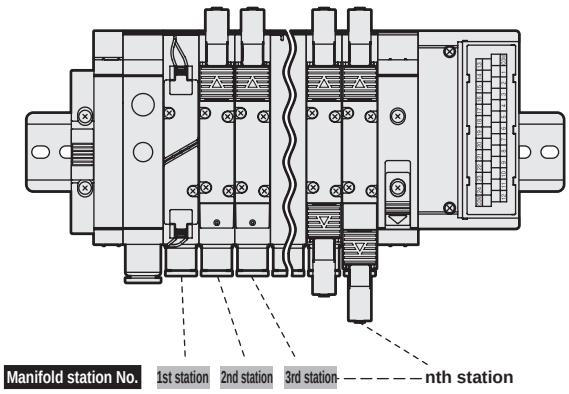

Terminal array of wiring method T11 (example)

*: The numerals of valve numbers 1a, 1b, 2a, 2b ... indicate the order of stations first station, second station... and the letters “a” and “b” indicate the “a side” solenoid and “b side” solenoid, respectively.
The manifold’s max. station number differs depending on the model.
Check the specifications of each model.

Terminal No.

COM	24	23	22	21	20	19	18	17	16	15	14	13
12	11	10	9	8	7	6	5	4	3	2	1	COM

[Standard wiring]

● For single solenoid valve

Terminal block No.	24	23	22	21	20	19	18	17	16	15	14	13
Valve No.	24a	23a	22a	21a	20a	19a	18a	17a	16a	15a	14a	13a
Terminal block No.	12	11	10	9	8	7	6	5	4	3	2	1
Valve No.	12a	11a	10a	9a	8a	7a	6a	5a	4a	3a	2a	1a

● For double solenoid valve

Terminal block No.	24	23	22	21	20	19	18	17	16	15	14	13
Valve No.	12b	12a	11b	11a	10b	10a	9b	9a	8b	8a	7b	7a
Terminal block No.	12	11	10	9	8	7	6	5	4	3	2	1
Valve No.	6b	6a	5b	5a	4b	4a	3b	3a	2b	2a	1b	1a

● For mixed use (single/double mixture)

Terminal block No.	24	23	22	21	20	19	18	17	16	15	14	13
Valve No.	18b	18a	17a	16a	15a	14a	13a	12b	12a	11b	11a	10a
Terminal block No.	12	11	10	9	8	7	6	5	4	3	2	1
Valve No.	9a	8a	7b	7a	6a	5a	4b	4a	3b	3a	2a	1a

[Double wiring]

Terminal block No.	24	23	22	21	20	19	18	17	16	15	14	13
Valve No.	(Blank)	12a	(Blank)	11a	(Blank)	10a	(Blank)	9a	(Blank)	8a	(Blank)	7a
Terminal block No.	12	11	10	9	8	7	6	5	4	3	2	1
Valve No.	(Blank)	6a	(Blank)	5a	(Blank)	4a	(Blank)	3a	(Blank)	2a	(Blank)	1a

Terminal block No.	24	23	22	21	20	19	18	17	16	15	14	13
Valve No.	12b	12a	11b	11a	10b	10a	9b	9a	8b	8a	7b	7a
Terminal block No.	12	11	10	9	8	7	6	5	4	3	2	1
Valve No.	6b	6a	5b	5a	4b	4a	3b	3a	2b	2a	1b	1a

Terminal block No.	24	23	22	21	20	19	18	17	16	15	14	13
Valve No.	12b	12a	11b	11a	(Blank)	10a	(Blank)	9a	(Blank)	8a	7b	7a
Terminal block No.	12	11	10	9	8	7	6	5	4	3	2	1
Valve No.	(Blank)	6a	(Blank)	5a	4b	4a	3b	3a	(Blank)	2a	(Blank)	1a

D-sub-connector (Wiring method T30)

T30 Connectors

The connector used for T30 wiring, called a D-sub-connector, is used widely for FA and OA devices. The 25P in particular is also an RS-232-C Standards designated connector, used for personal computer communication. The manifold station numbers are set in order from left with the piping port facing forward.

T30 (left side specifications)

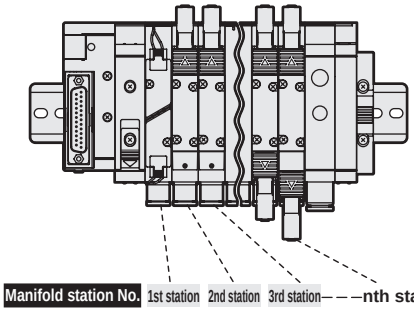

T30R (right side specifications)

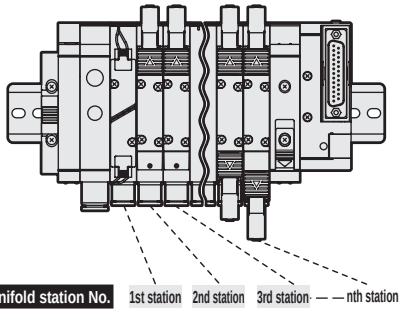

Precautions for connector T30

(1) Signal arrays of the PLC output unit must match signal arrays on the valve side.
(2) The working power is 12/24 VDC dedicated.
(3) A voltage drop may occur due to simultaneous energizing or cable length. Confirm that the voltage drop for the solenoid is within 10% of the rated voltage.

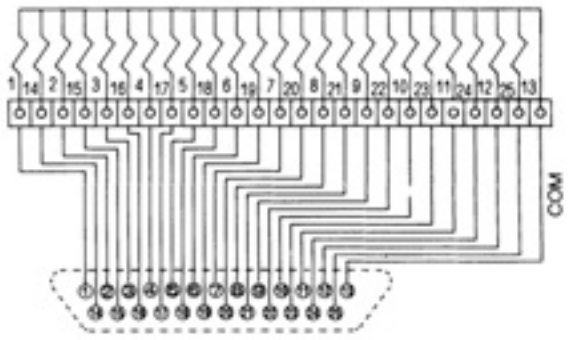

Connector pin array (example) of wiring method T30

*1: The numbers on valves No.1a, 1b, 2a, 2b ... indicate the 1st and 2nd stations, and alphabets “a” and “b” indicate the “a” side and “b” side solenoids, respectively. The manifold’s max. station number differs depending on the model. Check the specifications of each model.

Connector pin No.

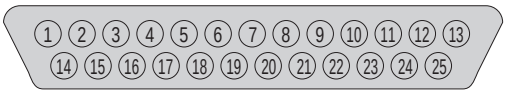

[Standard wiring]

● For single solenoid valve only

Pin No.	1	2	3	4	5	6	7	8	9	10	11	12	13
Valve No.	1a	3a	5a	7a	9a	11a	13a	15a	17a	19a	21a	23a	COM
Pin No.	14	15	16	17	18	19	20	21	22	23	24	25	
Valve No.	2a	4a	6a	8a	10a	12a	14a	16a	18a	20a	22a	24a	

[Double wiring]

Pin No.	1	2	3	4	5	6	7	8	9	10	11	12	13
Valve No.	1a	2a	3a	4a	5a	6a	7a	8a	9a	10a	11a	12a	COM
Pin No.	14	15	16	17	18	19	20	21	22	23	24	25	
Valve No.	(Blank)	(Blank)	(Blank)	(Blank)	(Blank)	(Blank)	(Blank)	(Blank)	(Blank)	(Blank)	(Blank)	(Blank)	

● For double solenoid valve only

Pin No.	1	2	3	4	5	6	7	8	9	10	11	12	13
Valve No.	1a	2a	3a	4a	5a	6a	7a	8a	9a	10a	11a	12a	COM
Pin No.	14	15	16	17	18	19	20	21	22	23	24	25	
Valve No.	1b	2b	3b	4b	5b	6b	7b	8b	9b	10b	11b	12b	

Pin No.	1	2	3	4	5	6	7	8	9	10	11	12	13
Valve No.	1a	2a	3a	4a	5a	6a	7a	8a	9a	10a	11a	12a	COM
Pin No.	14	15	16	17	18	19	20	21	22	23	24	25	
Valve No.	1b	2b	3b	4b	5b	6b	7b	8b	9b	10b	11b	12b	

● For mixed use (single/double mixture)

Pin No.	1	2	3	4	5	6	7	8	9	10	11	12	13
Valve No.	1a	3a	4a	5a	7a	8a	10a	11b	12b	14a	15b	17a	COM
Pin No.	14	15	16	17	18	19	20	21	22	23	24	25	
Valve No.	2a	3b	4b	6a	7b	9a	11a	12a	13a	15a	16a	17b	

Pin No.	1	2	3	4	5	6	7	8	9	10	11	12	13
Valve No.	1a	2a	3a	4a	5a	6a	7a	8a	9a	10a	11a	12a	COM
Pin No.	14	15	16	17	18	19	20	21	22	23	24	25	
Valve No.	(Blank)	(Blank)	3b	4b	(Blank)	(Blank)	7b	(Blank)	(Blank)	(Blank)	11b	12b	

How to order

Cable with D-sub-connector model No.

4GR - CABLE - D 0 0 - 1

Ⓐ User interface

Ⓑ Cable length

* Each pneumatic valve model can be used for D-sub-connector T30/T31.

Code	Description	Model No. 4GR
Ⓐ User interface		
0	Cut only	●
1	With round terminal for M3.5 screw	●
Ⓑ Cable length		
1	1 m	●
3	3 m	●
5	5 m	●

D-sub-connector terminal No. and conductor

● 4GR-CABLE-D00-Ⓑ

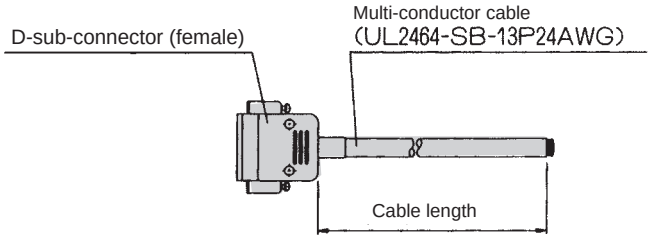

D-sub-connector terminal No.		1	2	3	4	5	6	7	8	9	10	11	12	13
Core identification	Insulator color	Orange	Orange	Yellow	Yellow	Green	Green	Gray	Gray	White	White	Orange	Orange	Yellow
	Mark type	1 point	1 point	1 point	1 point	1 point	1 point	1 point	1 point	1 point	1 point	2 points	2 points	2 points
	Mark color	Black	Red	Black	Red	Black	Red	Black	Red	Black	Red	Black	Red	Black
D-sub-connector terminal No.		14	15	16	17	18	19	20	21	22	23	24	25	
Core identification	Insulator color	Yellow	Green	Green	Gray	Gray	White	White	Orange	Orange	Yellow	Yellow	Green	
	Mark type	2 points	2 points	2 points	2 points	2 points	2 points	2 points	3 points	3 points	3 points	3 points	3 points	
	Mark color	Red	Black	Red	Black	Red	Black	Red	Black	Red	Black	Red	Black	

● 4GR-CABLE-D01-Ⓑ

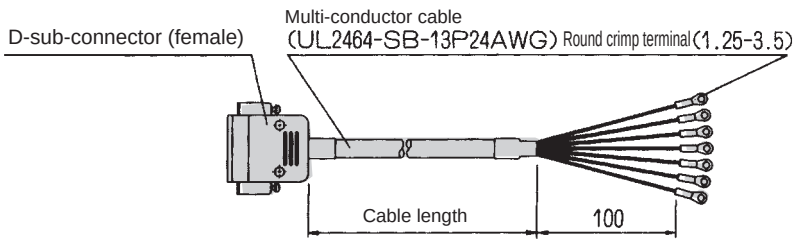

D-sub-connector terminal No.		1	2	3	4	5	6	7	8	9	10	11	12	13
Core identification	Insulator color	Orange	Orange	Yellow	Yellow	Green	Green	Gray	Gray	White	White	Orange	Orange	Yellow
	Mark type	1 point	1 point	1 point	1 point	1 point	1 point	1 point	1 point	1 point	1 point	2 points	2 points	2 points
	Mark color	Black	Red	Black	Red	Black	Red	Black	Red	Black	Red	Black	Red	Black
Mark tube No.		1	2	3	4	5	6	7	8	9	10	11	12	13
D-sub-connector terminal No.		14	15	16	17	18	19	20	21	22	23	24	25	
Core identification	Insulator color	Yellow	Green	Green	Gray	Gray	White	White	Orange	Orange	Yellow	Yellow	Green	
	Mark type	2 points	2 points	2 points	2 points	2 points	2 points	2 points	3 points	3 points	3 points	3 points	3 points	
	Mark color	Red	Black	Red	Black	Red	Black	Red	Black	Red	Black	Red	Black	
Mark tube No.		14	15	16	17	18	19	20	21	22	23	24	25	

* Up to 24 points can be used. Cut the wires for surplus points before use.

Flat cable connector (Wiring method T50)

T50 Connectors

The connector used for T50 wiring method complies with MIL Standards (MIL-C-83503). Wiring work is simplified with the pressure welded flat cable.
Pin numbers are assigned differently based on the PLC manufacturer, but the function assignment is the same.
Arrange using connectors and the triangular mark (▼) in the table below for reference. The ▼ mark is the reference for both plug and socket. The manifold station numbers are set in order from left with b side solenoid side (cap side for single) facing forward.

T50 (left side specifications)

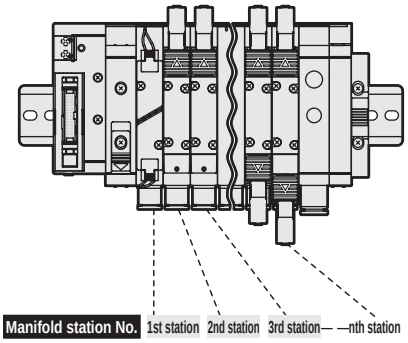

T50R (right side specifications)

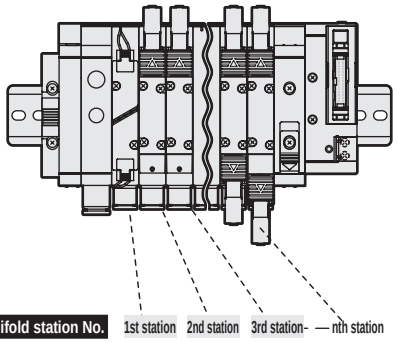

Precautions for connector (T50)

(1) Signal arrays of the PLC output unit must match signal arrays on the valve side. Direct connections with the PLC are limited. Use the dedicated cable for each PLC manufacturer.
(2) The working power is 12/24 VDC dedicated.
(3) When connecting the T50 to a general output unit, use the + terminal (20, 10) of the 20P connector as the plus side common, and use the NPN transistor output open collector for the drive circuit.
(4) Never connect this manifold to the input unit, as major failures could occur in this device and in the peripherals. Be sure to connect the manifold to the output unit.
(5) A voltage drop may occur due to simultaneous energizing or cable length. Confirm that the voltage drop for the solenoid is within 10% of the rated voltage.

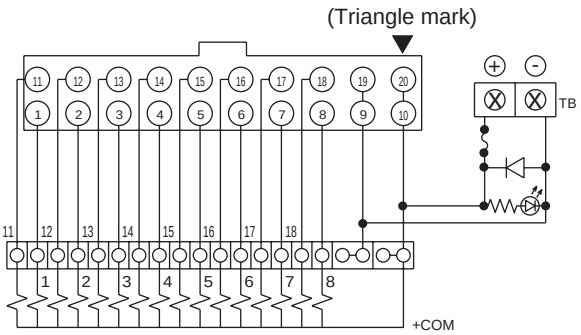

T50 connector pin array (example)

*1: The numbers on valves No.1a, 1b, 2a, 2b ... indicate the 1st and 2nd stations, and alphabets “a” and “b” indicate the “a” side and “b” side solenoids, respectively.
The manifold’s max. station number differs depending on the model. Check the specifications of each model.

Connector pin No.

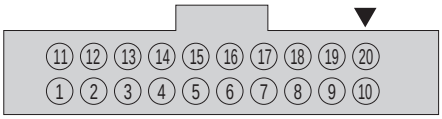

[Standard wiring]

● For single solenoid valve only

Pin No.	11	12	13	14	15	16	17	18	19	20
Valve No.	9a	10a	11a	12a	13a	14a	15a	16a	- Power supply	+ Power supply
Pin No.	1	2	3	4	5	6	7	8	9	10
Valve No.	1a	2a	3a	4a	5a	6a	7a	8a	- Power supply	+ Power supply

● For double solenoid valve only

Pin No.	11	12	13	14	15	16	17	18	19	20
Valve No.	5a	5b	6a	6b	7a	7b	8a	8b	- Power supply	+ Power supply
Pin No.	1	2	3	4	5	6	7	8	9	10
Valve No.	1a	1b	2a	2b	3a	3b	4a	4b	- Power supply	+ Power supply

● For mixed use (single/double mixture)

Pin No.	11	12	13	14	15	16	17	18	19	20
Valve No.	7a	7b	8a	9a	10a	10b	11a	11b	- Power supply	+ Power supply
Pin No.	1	2	3	4	5	6	7	8	9	10
Valve No.	1a	2a	3a	3b	4a	4b	5a	6a	- Power supply	+ Power supply

[Double wiring]

Pin No.	11	12	13	14	15	16	17	18	19	20
Valve No.	5a	(Blank)	6a	(Blank)	7a	(Blank)	8a	(Blank)	- Power supply	+ Power supply
Pin No.	1	2	3	4	5	6	7	8	9	10
Valve No.	1a	(Blank)	2a	(Blank)	3a	(Blank)	4a	(Blank)	- Power supply	+ Power supply

Pin No.	11	12	13	14	15	16	17	18	19	20
Valve No.	5a	5b	6a	6b	7a	7b	8a	8b	- Power supply	+ Power supply
Pin No.	1	2	3	4	5	6	7	8	9	10
Valve No.	1a	1b	2a	2b	3a	3b	4a	4b	- Power supply	+ Power supply

Pin No.	11	12	13	14	15	16	17	18	19	20
Valve No.	5a	(Blank)	6a	(Blank)	7a	7b	8a	(Blank)	- Power supply	+ Power supply
Pin No.	1	2	3	4	5	6	7	8	9	10
Valve No.	1a	(Blank)	2a	(Blank)	3a	3b	4a	4b	- Power supply	+ Power supply

Flat cable connector (Wiring method T51)

T51 Connectors

The connector used for T51 wiring method complies with MIL Standards (MIL-C-83503). Wiring work is simplified with the pressure welded flat cable.
Pin numbers are assigned differently based on the PLC manufacturer but the function assignment is the same.
Arrange using connectors and the triangular mark (▼) in the table below for reference.
For both plug and socket, the triangular mark (▼) is the reference.
The manifold station numbers are set in order from left with “b side” solenoid (cap for single) facing forward.

T51 (left side specifications)

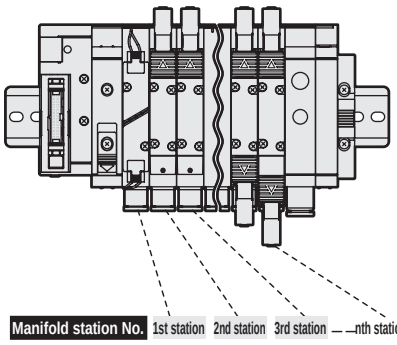

T51R (right side specifications)

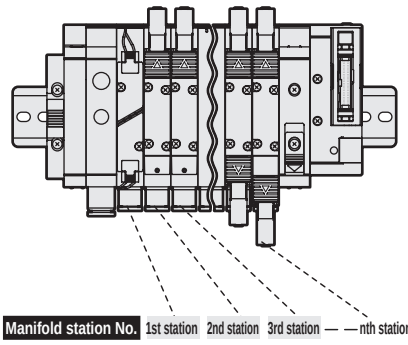

Precautions for connector (T51)

(1) Signal arrays of the PLC output unit must match signal arrays on the valve side.
(2) The working power is 12/24 VDC dedicated.
(3) The T51 is driven with a general output unit.
(4) Never connect this manifold to the input unit, as major failures could occur in this device and in peripherals. Be sure to connect the manifold to the output unit.
(5) A voltage drop may occur due to simultaneous energizing or cable length. Confirm that the voltage drop for the solenoid is within 10% of the rated voltage.

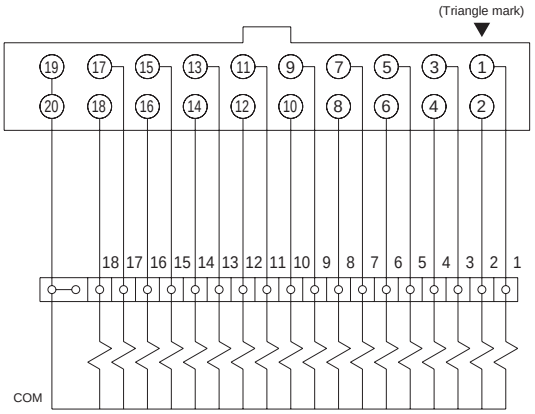

T51 connector pin array (example)

*: The numerals of valve numbers 1a, 1b, 2a, 2b ... indicate the order of stations first station, second station... and the letters “a” and “b” indicate the “a side” solenoid and “b side” solenoid, respectively. The manifold’s max. station number differs depending on the model. Check the specifications of each model.

Connector pin No.

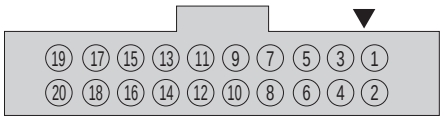

● For single solenoid valve only

[Standard wiring]

Pin No.	19	17	15	13	11	9	7	5	3	1
Valve No.	COM	17a	15a	13a	11a	9a	7a	5a	3a	1a
Pin No.	20	18	16	14	12	10	8	6	4	2
Valve No.	COM	18a	16a	14a	12a	10a	8a	6a	4a	2a

[Double wiring]

Pin No.	19	17	15	13	11	9	7	5	3	1
Valve No.	COM	9a	8a	7a	6a	5a	4a	3a	2a	1a
Pin No.	20	18	16	14	12	10	8	6	4	2
Valve No.	COM	(Blank)	(Blank)	(Blank)	(Blank)	(Blank)	(Blank)	(Blank)	(Blank)	(Blank)

● For double solenoid valve only

Pin No.	19	17	15	13	11	9	7	5	3	1
Valve No.	COM	9a	8a	7a	6a	5a	4a	3a	2a	1a
Pin No.	20	18	16	14	12	10	8	6	4	2
Valve No.	COM	9b	8b	7b	6b	5b	4b	3b	2b	1b

Pin No.	19	17	15	13	11	9	7	5	3	1
Valve No.	COM	9a	8a	7a	6a	5a	4a	3a	2a	1a
Pin No.	20	18	16	14	12	10	8	6	4	2
Valve No.	COM	9b	8b	7b	6b	5b	4b	3b	2b	1b

● For mixed use (single/double mixture)

Pin No.	19	17	15	13	11	9	7	5	3	1
Valve No.	COM	12a	11a	10a	8a	7a	5a	4a	3a	1a
Pin No.	20	18	16	14	12	10	8	6	4	2
Valve No.	COM	13a	11b	10b	9a	7b	6a	4b	3b	2a

Pin No.	19	17	15	13	11	9	7	5	3	1
Valve No.	COM	9a	8a	7a	6a	5a	4a	3a	2a	1a
Pin No.	20	18	16	14	12	10	8	6	4	2
Valve No.	COM	(Blank)	(Blank)	7b	(Blank)	(Blank)	4b	3b	(Blank)	(Blank)

Flat cable connector (Wiring method T52)

T52 Connectors

The connector used for T52 wiring method complies with MIL Standards (MIL-C-83503).
Wiring work is simplified with the pressure welded flat cable.
Pin numbers are assigned differently based on the PLC manufacturer, but the function assignment is the same.
Arrange using connectors and the triangular mark (▼) in the table below for reference. The triangular mark (▼) is the reference for both plug and socket.
The manifold station numbers are set in order from left with b side solenoid (cap for single) facing forward.

Precautions for connector (T52)

(1) Signal arrays of the PLC output unit must match signal arrays on the valve side.
(2) The working power is 12/24 VDC dedicated.
(3) The T52 is driven with a general output unit.
(4) Never connect this manifold to the input unit, as major failures could occur in this device and in peripherals. Be sure to connect the manifold to the output unit.
(5) A voltage drop may occur due to simultaneous energizing or cable length. Confirm that the voltage drop for the solenoid is within 10% of the rated voltage.

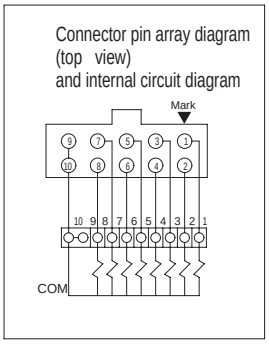

T52 (left side specifications)

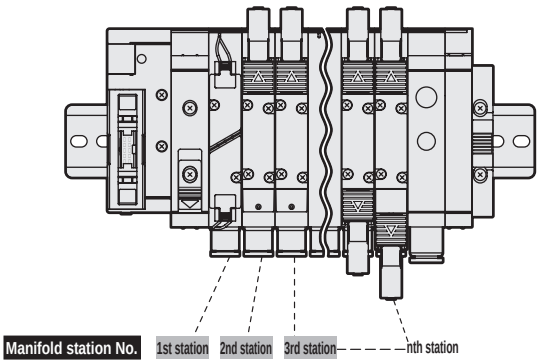

T52R (right side specifications)

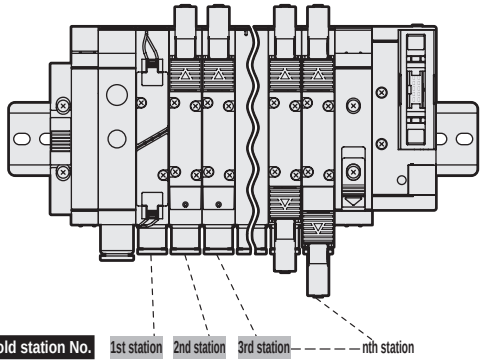

T52 connector pin array (example)

*: The numerals of valve numbers 1a, 1b, 2a, 2b ... indicate the order of stations first station, second station... and the letters “a” and “b” indicate the “a side” solenoid and “b side” solenoid, respectively.
The manifold’s max. station number differs depending on the model. Check the specifications of each model.

Connector pin No.

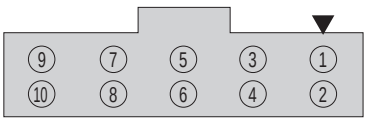

● For single solenoid valve only

[Standard wiring]

Pin No.	9	7	5	3	1
Valve No.	COM	7a	5a	3a	1a
Pin No.	10	8	6	4	2
Valve No.	COM	8a	6a	4a	2a

[Double wiring]

Pin No.	9	7	5	3	1
Valve No.	COM	4a	3a	2a	1a
Pin No.	10	8	6	4	2
Valve No.	COM	(Blank)	(Blank)	(Blank)	(Blank)

● For double solenoid valve only

Pin No.	9	7	5	3	1
Valve No.	COM	4a	3a	2a	1a
Pin No.	10	8	6	4	2
Valve No.	COM	4b	3b	2b	1b

Pin No.	9	7	5	3	1
Valve No.	COM	4a	3a	2a	1a
Pin No.	10	8	6	4	2
Valve No.	COM	4b	3b	2b	1b

● For mixed use (single/double mixture)

Pin No.	9	7	5	3	1
Valve No.	COM	5b	4b	3a	1a
Pin No.	10	8	6	4	2
Valve No.	COM	6a	5a	4a	2a

Pin No.	9	7	5	3	1
Valve No.	COM	4a	3a	2a	1a
Pin No.	10	8	6	4	2
Valve No.	COM	4b	(Blank)	(Blank)	(Blank)

Flat cable connector(Wiring method T53)

T53 Connector

The connector used for T53 wiring method complies with MIL Standards (MIL-C-83503). Wiring work is simplified with the pressure welded flat cable.
Pin numbers are assigned differently based on the PLC manufacturer, but the function assignment is the same. Arrange using connectors and the triangular mark (▼) in the table below for reference. The triangular mark (▼) is the reference for both plug and socket.
The manifold station numbers are set in order from left with b side solenoid (cap for single) facing forward.

Connector pin array diagram (top view) and internal circuit diagram

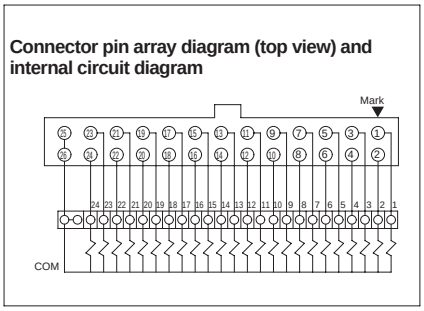

Precautions for connector (T53)

(1)Signal arrays of the PLC output unit must match signal arrays on the valve side.
(2) The working power is 12/24 VDC dedicated.
(3) The T53 type is driven with a general output unit.
(4) Never connect this manifold to the input unit, as major failures could occur in this device and in peripherals. Be sure to connect the manifold to the output unit.
(5)A voltage drop may occur due to simultaneous energizing or cable length. Confirm that the voltage drop for the solenoid is within 10% of the rated voltage.

T53 (left side specifications)

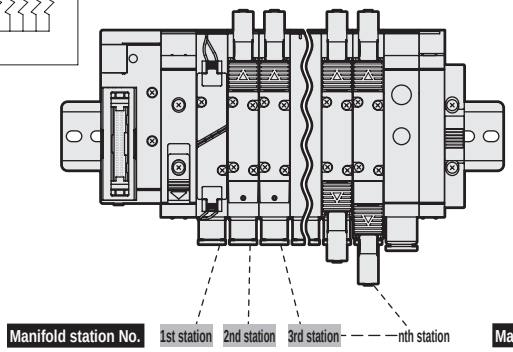

T53R (right side specifications)

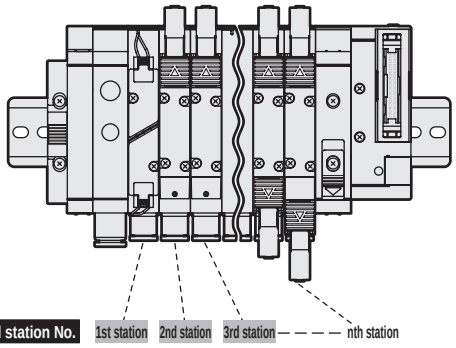

T53 connector pin array (example)

*: Valve No.1a, 1b, 2a, 2b...The numbers in indicate the first and second stations. The letters a and b indicate the a side solenoid and the b side solenoid. The manifold's max. station number differs depending on the model. Check the specifications of each model.

Connector pin No.

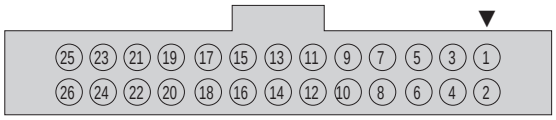

[Standard wiring]

● For single solenoid valve only

Pin No.	25	23	21	19	17	15	13	11	9	7	5	3	1
Valve No.	COM	23a	21a	19a	17a	15a	13a	11a	9a	7a	5a	3a	1a
Pin No.	26	24	22	20	18	16	14	12	10	8	6	4	2
Valve No.	COM	24a	22a	20a	18a	16a	14a	12a	10a	8a	6a	4a	2a

● For double solenoid valve only

Pin No.	25	23	21	19	17	15	13	11	9	7	5	3	1
Valve No.	COM	12a	11a	10a	9a	8a	7a	6a	5a	4a	3a	2a	1a
Pin No.	26	24	22	20	18	16	14	12	10	8	6	4	2
Valve No.	COM	12b	11b	10b	9b	8b	7b	6b	5b	4b	3b	2b	1b

● For mixed use (single/double mixture)

Pin No.	25	23	21	19	17	15	13	11	9	7	5	3	1
Valve No.	COM	16a	15a	14a	12a	10a	9a	8a	7a	5b	4b	3a	1a
Pin No.	26	24	22	20	18	16	14	12	10	8	6	4	2
Valve No.	COM	16b	15b	14b	13a	11a	9b	8b	7b	6a	5a	4a	2a

[Double wiring]

Pin No.	25	23	21	19	17	15	13	11	9	7	5	3	1
Valve No.	COM	12a	11a	10a	9a	8a	7a	6a	5a	4a	3a	2a	1a
Pin No.	26	24	22	20	18	16	14	12	10	8	6	4	2
Valve No.	COM	(Blank)	(Blank)	(Blank)	(Blank)	(Blank)	(Blank)	(Blank)	(Blank)	(Blank)	(Blank)	(Blank)	(Blank)

Pin No.	25	23	21	19	17	15	13	11	9	7	5	3	1
Valve No.	COM	12a	11a	10a	9a	8a	7a	6a	5a	4a	3a	2a	1a
Pin No.	26	24	22	20	18	16	14	12	10	8	6	4	2
Valve No.	COM	12b	11b	10b	9b	8b	7b	6b	5b	4b	3b	2b	1b

Pin No.	25	23	21	19	17	15	13	11	9	7	5	3	1
Valve No.	COM	12a	11a	10a	9a	8a	7a	6a	5a	4a	3a	2a	1a
Pin No.	26	24	22	20	18	16	14	12	10	8	6	4	2
Valve No.	COM	(Blank)	(Blank)	(Blank)	9b	8b	7b	(Blank)	5b	4b	(Blank)	(Blank)	(Blank)

Serial transmission (Wiring method T6G1)

T6G1 serial transmission

- The device unit's output No. differs with the manufacturer. The connector pin No. and the manifold solenoid correspond as shown below.
- Station manifolds are set in order from the left with the piping port facing forward regardless of the wiring block position.
- Internal connectors are wired in order, so there may be some blank numbers depending on the number of stations. These blank outputs cannot be used to drive other than the solenoid manifolds in use.
- The working power is 24 VDC.
- A device unit for each communication system is used. Contact CKD for usable PLC models, host unit model numbers and communication system specifications.
- Output number differs by PLC manufacturer, but the function assignment is the same. Arrange using connectors and the triangular mark (▼) in the table below for reference. The ▼ mark is the reference for both plug and socket.

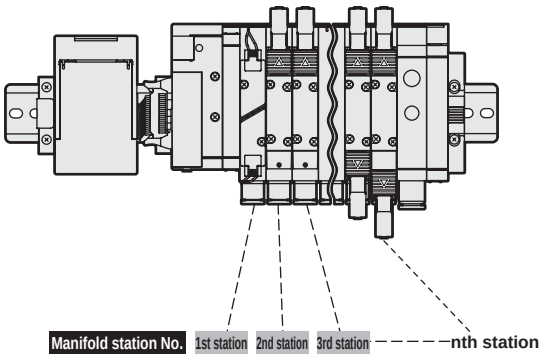

Correspondence of output No. with connector pin No.

● T6G1

Output No.	0	1	2	3	4	5	6	7	8	9	A	B	C	D	E	F
Connector pin No.	1	2	3	4	5	6	7	8	11	12	13	14	15	16	17	18

T6G1 connector pin array (example)

*: The numerals of valve numbers 1a, 1b, 2a, 2b ... indicate the order of stations first station, second station... and the letters "a" and "b" indicate the "a side" solenoid and "b side" solenoid, respectively. The manifold's max. station number differs depending on the model. Check the specifications of each model.

Connector pin No.

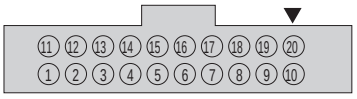

● For single solenoid valve only

[Standard wiring]

Pin No.	11	12	13	14	15	16	17	18	19	20
Valve No.	9a	10a	11a	12a	13a	14a	15a	16a	(Blank)	+COM
Pin No.	1	2	3	4	5	6	7	8	9	10
Valve No.	1a	2a	3a	4a	5a	6a	7a	8a	(Blank)	+COM

[Double wiring]

Pin No.	11	12	13	14	15	16	17	18	19	20
Valve No.	5a	(Blank)	6a	(Blank)	7a	(Blank)	8a	(Blank)	(Blank)	+COM
Pin No.	1	2	3	4	5	6	7	8	9	10
Valve No.	1a	(Blank)	2a	(Blank)	3a	(Blank)	4a	(Blank)	(Blank)	+COM

● For double solenoid valve only

Pin No.	11	12	13	14	15	16	17	18	19	20
Valve No.	5a	5b	6a	6b	7a	7b	8a	8b	(Blank)	+COM
Pin No.	1	2	3	4	5	6	7	8	9	10
Valve No.	1a	1b	2a	2b	3a	3b	4a	4b	(Blank)	+COM

Pin No.	11	12	13	14	15	16	17	18	19	20
Valve No.	5a	5b	6a	6b	7a	7b	8a	8b	(Blank)	+COM
Pin No.	1	2	3	4	5	6	7	8	9	10
Valve No.	1a	1b	2a	2b	3a	3b	4a	4b	(Blank)	+COM

● For mixed use (single/double mixture)

Pin No.	11	12	13	14	15	16	17	18	19	20
Valve No.	7a	7b	8a	9a	10a	10b	11a	11b	(Blank)	+COM
Pin No.	1	2	3	4	5	6	7	8	9	10
Valve No.	1a	2a	3a	3b	4a	4b	5a	6a	(Blank)	+COM

Pin No.	11	12	13	14	15	16	17	18	19	20
Valve No.	5a	(Blank)	6a	(Blank)	7a	7b	8a	(Blank)	(Blank)	+COM
Pin No.	1	2	3	4	5	6	7	8	9	10
Valve No.	1a	(Blank)	2a	(Blank)	3a	3b	4a	4b	(Blank)	+COM

* Do not use (Blank).

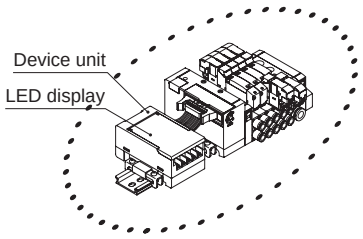

	LED display	Wiring method
T6G1	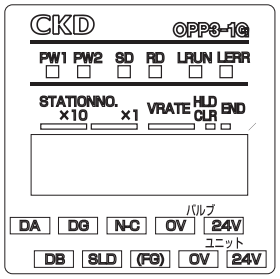	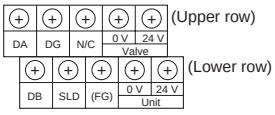 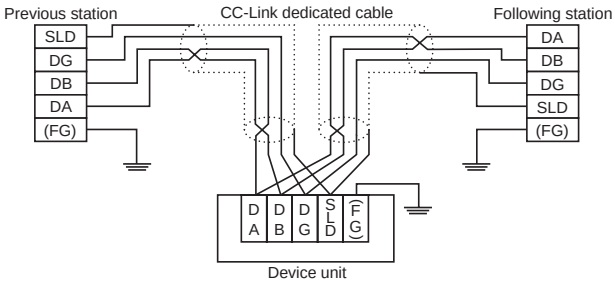

LED name	Display description
PW1	Lights when unit power is ON.
PW2	Lights when valve power is ON.
SD	Lights when transmitting data.
RD	Lights when receiving data.
L RUN	Lights when receiving normal data, and turns OFF at timeover.
L ERR	Lights when transmission error occurs. Turns OFF when time has lapsed. Lights when the station No. setting or transmission speed setting is incorrect. Blinks when station No. or transmission speed in setting changes.

Serial transmission: Wiring method

T7* serial transmission

- The device unit's output No. differs with the manufacturer. The internal connector pin No. and the manifold solenoid correspond as shown below.
- Station manifolds are set in order from the left with the piping port facing forward regardless of the wiring block position.
- Internal connectors are wired in order, so there may be some blank numbers depending on the number of stations. These blank outputs cannot be used to drive other than the solenoid manifolds in use.
- The working power is 24 VDC.
- A device unit for each communication system is used. Contact CKD for usable PLC models, host unit model numbers and communication system specifications.
- Securely fix the enclosed connector with fixing screws. (Proper tightening torque 0.3 N·m)

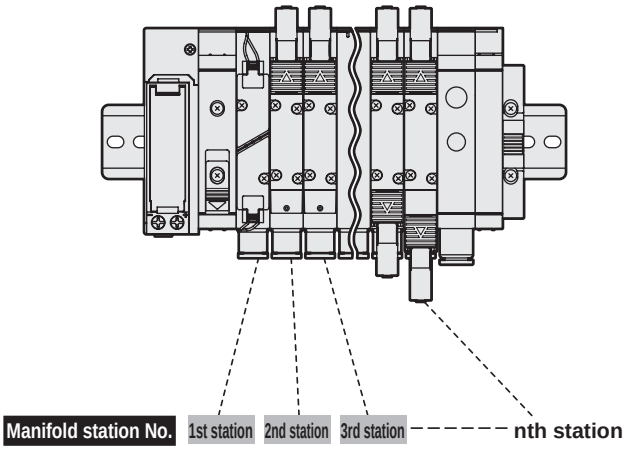

Internal base connector pin No.

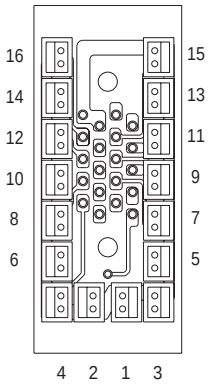

Correspondence of output No. with connector pin No.

● T7D1, T7L1, T7S□1

Output No.	0	1	2	3	4	5	6	7	8	9	10	11	12	13	14	15
Connector pin No.	1	2	3	4	5	6	7	8	9	10	11	12	13	14	15	16

● T7G1

Output No.	0	1	2	3	4	5	6	7	8	9	A	B	C	D	E	F
Connector pin No.	1	2	3	4	5	6	7	8	9	10	11	12	13	14	15	16

T7* connector pin array (example)

*: The numerals of valve numbers 1a, 1b, 2a, 2b ... indicate the order of stations first station, second station... and the letters "a" and "b" indicate the "a side" solenoid and "b side" solenoid, respectively.
The manifold's max. station number differs depending on the model. Check the specifications of each model.

[Standard wiring]

● For single solenoid valve

Pin No.	1	2	3	4	5	6	7	8	9	10	11	12	13	14	15	16
Valve No.	1a	2a	3a	4a	5a	6a	7a	8a	9a	10a	11a	12a	13a	14a	15a	16a

● For double solenoid valve

Pin No.	1	2	3	4	5	6	7	8	9	10	11	12	13	14	15	16
Valve No.	1a	1b	2a	2b	3a	3b	4a	4b	5a	5b	6a	6b	7a	7b	8a	8b

● For mixed use (single/double mixture)

Pin No.	1	2	3	4	5	6	7	8	9	10	11	12	13	14	15	16
Valve No.	1a	2a	3a	3b	4a	4b	5a	6a	7a	7b	8a	9a	10a	10b	11a	11b

[Double wiring]

● For single solenoid valve

Pin No.	1	2	3	4	5	6	7	8	9	10	11	12	13	14	15	16
Valve No.	1a	(Blank)	2a	(Blank)	3a	(Blank)	4a	(Blank)	5a	(Blank)	6a	(Blank)	7a	(Blank)	8a	(Blank)

● For double solenoid valve

Pin No.	1	2	3	4	5	6	7	8	9	10	11	12	13	14	15	16
Valve No.	1a	1b	2a	2b	3a	3b	4a	4b	5a	5b	6a	6b	7a	7b	8a	8b

● For mixed use (single/double mixture)

Pin No.	1	2	3	4	5	6	7	8	9	10	11	12	13	14	15	16
Valve No.	1a	(Blank)	2a	(Blank)	3a	3b	4a	4b	5a	(Blank)	6a	(Blank)	7a	7b	8a	(Blank)

* Do not use (Blank).

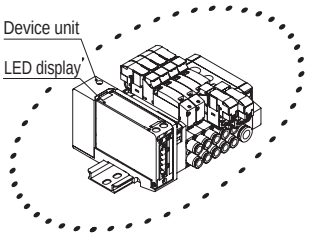

Model No.	LED display	Wiring method

T7D1

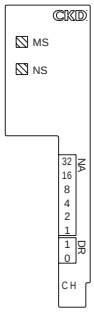

LED name	Display description
MS	Device status is indicated with green and red LEDs. Errors are indicated using combination with "NS LED".
NS	Network status is indicated with green and red LEDs. Errors are indicated using combination with "MS LED".

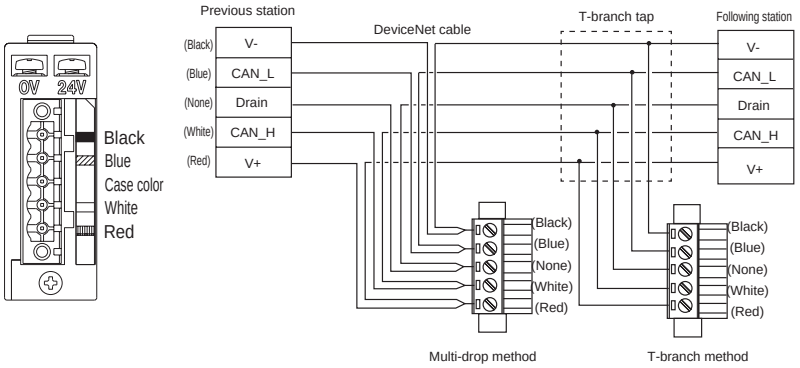

- Connect the power supply line to the terminal box.
- Connect the DeviceNet cable to the connector.
- The power terminal box (24 V, 0 V) is isolated from the communication common power supply terminal (V+, V-).
- Unit power and valve power use a common terminal.
- Wiring section connectors are attached.

T7G1

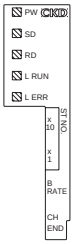

LED name	Display description
PW	Lights when power is ON.
SD	Lights when transmitting data.
RD	Lights when receiving data.
L RUN	Lights when receiving normal data. Turns OFF at time over.
L ERR	Lights when transmission error occurs. Turns OFF at time over. Lights when station No. or transmission speed setting fails.Blinks when station No. or transmission speed setting changes.

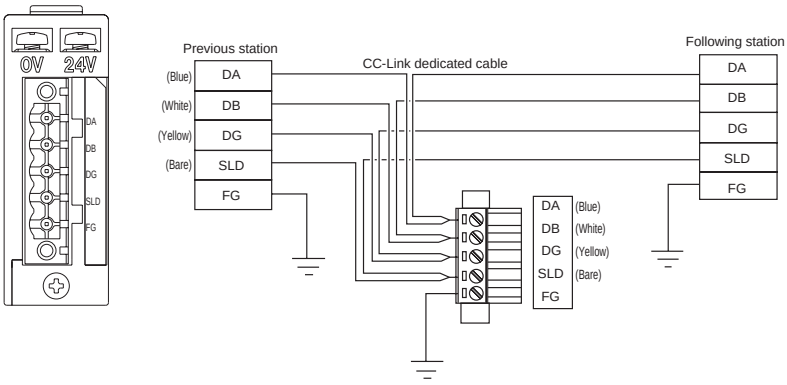

- Connect the power supply line to the terminal box.
- Connect the CC-Link cable to the connector.
- Unit power and valve power use a common terminal.
- Wiring section connectors are attached.

T7L1

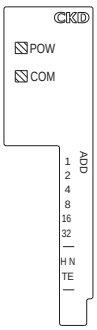

LED name	Display description
POW	Lights when power supplies of master and device units are ON.
COM	Lamp is ON during normal communication with master unit. Lamp is OFF when communication failure continues for a certain period.

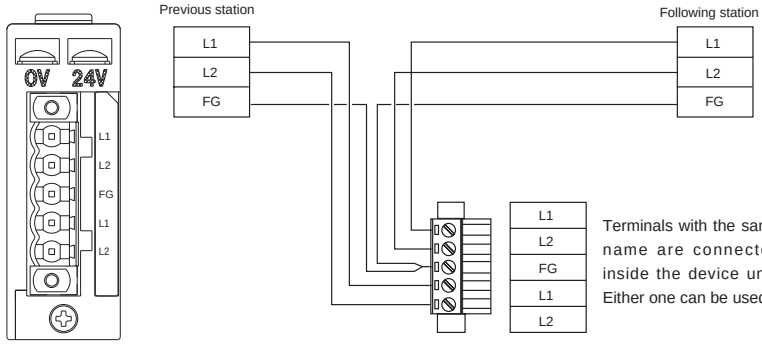

- Connect the power supply line to the terminal box.
- Connect the communication line to the connector.
- Unit power and valve power use a common terminal.
- Wiring section connectors are attached.

Model No.	LED display	Wiring method
T7S□1	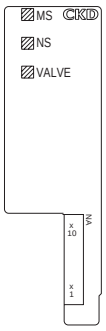	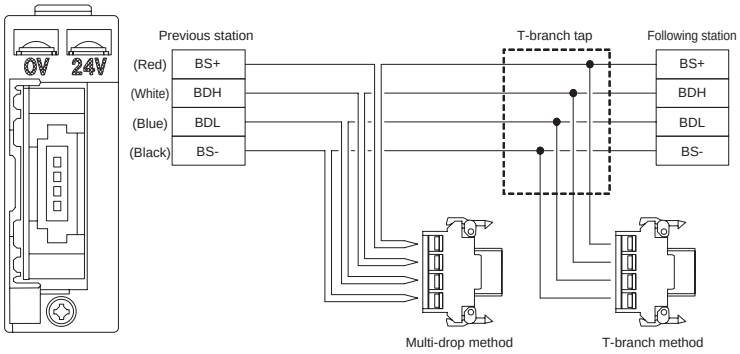

LED name	Display description
MS	Device status is indicated with green and red LEDs. Errors are indicated in combination with "NS LED".
NS	Network status is indicated with green and red LEDs. Errors are indicated in combination with "MS LED".
VALVE	Green lamp is ON when valve power is ON

· Communication line/communication power supply are connected to the plug for communication.
· Valve power supply is connected to the terminal box.
· Communication plug is not included with this product.

MEMO

Serial transmission: Wiring method

T8* serial transmission

- The device unit's output No. differs with the manufacturer. The internal connector pin No. and the manifold solenoid correspond as shown below.
- Station manifolds are set in order from the left with the piping port facing forward regardless of the wiring block position.
- Internal connectors are wired in order, so there may be some blank numbers depending on the number of stations. These blank outputs cannot be used to drive other than the solenoid manifolds in use.
- The working power is 24 VDC.
- Securely fix the enclosed connector with fixing screws. (Proper tightening torque 0.3 N·m)

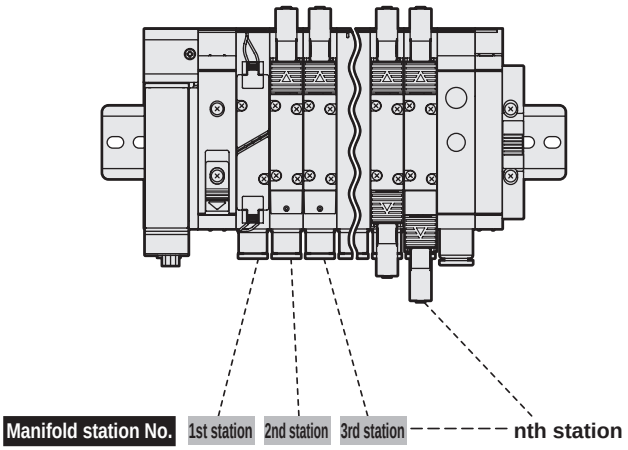

Internal base connector pin No.

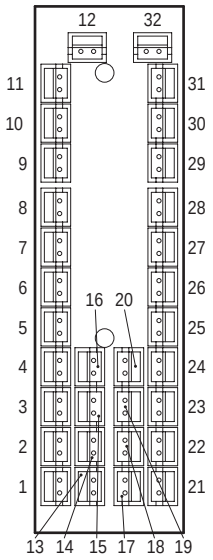

Correspondence of output No. with connector pin No.

● T8□1

Output No.	0	1	2	3	4	5	6	7	8	9	10	11	12	13	14	15
Connector pin No.	1	2	3	4	5	6	7	8	9	10	11	12	13	14	15	16

● T8□2

Output No.	0	1	2	3	4	5	6	7	8	9	10	11	12	13	14	15
Connector pin No.	1	2	3	4	5	6	7	8	9	10	11	12	13	14	15	16
Output No.	16	17	18	19	20	21	22	23	24	25	26	27	28	29	30	31
Connector pin No.	17	18	19	20	21	22	23	24	25	26	27	28	29	30	31	32

T8* connector pin array (example)

*: The numerals of valve numbers 1a, 1b, 2a, 2b ... indicate the order of stations first station, second station... and the letters "a" and "b" indicate the "a side" solenoid and "b side" solenoid, respectively.
The manifold's max. station number differs depending on the model. Check the specifications of each model.

[Standard wiring]

● For single solenoid valve

Pin No.	1	2	3	4	5	6	7	8	9	10	11	12	13	14	15	16
Valve No.	1a	2a	3a	4a	5a	6a	7a	8a	9a	10a	11a	12a	13a	14a	15a	16a
Pin No.	17	18	19	20	21	22	23	24	25	26	27	28	29	30	31	32
Valve No.	17a	18a	19a	20a	21a	22a	23a	24a	(Blank)	(Blank)	(Blank)	(Blank)	(Blank)	(Blank)	(Blank)	(Blank)

[Double wiring]

Pin No.	1	2	3	4	5	6	7	8	9	10	11	12	13	14	15	16
Valve No.	1a	(Blank)	2a	(Blank)	3a	(Blank)	4a	(Blank)	5a	(Blank)	6a	(Blank)	7a	(Blank)	8a	(Blank)
Pin No.	17	18	19	20	21	22	23	24	25	26	27	28	29	30	31	32
Valve No.	9a	(Blank)	10a	(Blank)	11a	(Blank)	12a	(Blank)	13a	(Blank)	14a	(Blank)	15a	(Blank)	16a	(Blank)

● For double solenoid valve

Pin No.	1	2	3	4	5	6	7	8	9	10	11	12	13	14	15	16
Valve No.	1a	1b	2a	2b	3a	3b	4a	4b	5a	5b	6a	6b	7a	7b	8a	8b
Pin No.	17	18	19	20	21	22	23	24	25	26	27	28	29	30	31	32
Valve No.	9a	9b	10a	10b	11a	11b	12a	12b	13a	13b	14a	14b	15a	15b	16a	16b

Pin No.	1	2	3	4	5	6	7	8	9	10	11	12	13	14	15	16
Valve No.	1a	1b	2a	2b	3a	3b	4a	4b	5a	5b	6a	6b	7a	7b	8a	8b
Pin No.	17	18	19	20	21	22	23	24	25	26	27	28	29	30	31	32
Valve No.	9a	9b	10a	10b	11a	11b	12a	12b	13a	13b	14a	14b	15a	15b	16a	16b

● For mixed use (single/double mixture)

Pin No.	1	2	3	4	5	6	7	8	9	10	11	12	13	14	15	16
Valve No.	1a	2a	3a	3b	4a	4b	5a	6a	7a	7b	8a	9a	10a	10b	11a	11b
Pin No.	17	18	19	20	21	22	23	24	25	26	27	28	29	30	31	32
Valve No.	12a	13a	14a	14b	15a	15b	16a	17a	18a	18b	19a	20a	21a	21b	22a	22b

Pin No.	1	2	3	4	5	6	7	8	9	10	11	12	13	14	15	16
Valve No.	1a	(Blank)	2a	(Blank)	3a	3b	4a	4b	5a	(Blank)	6a	(Blank)	7a	7b	8a	(Blank)
Pin No.	17	18	19	20	21	22	23	24	25	26	27	28	29	30	31	32
Valve No.	9a	(Blank)	10a	10b	11a	11b	12a	(Blank)	13a	(Blank)	14a	14b	15a	15b	16a	(Blank)

* Do not use (Blank).

Model No.	LED display	Wiring

T8G*

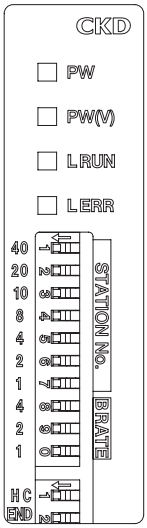

LED display description

LED name	Display description
PW	Lights when unit power is ON. Red light is ON when normal
PW(V)	Lights when valve power is ON. Red light is ON when normal (Cannot be monitored when the unit power is not ON)
L RUN	ON when CC-Link refresh data is normally received. Red light is ON when normal
L ERR	ON (red) when CC-Link data reception is abnormal. Light is OFF when normal

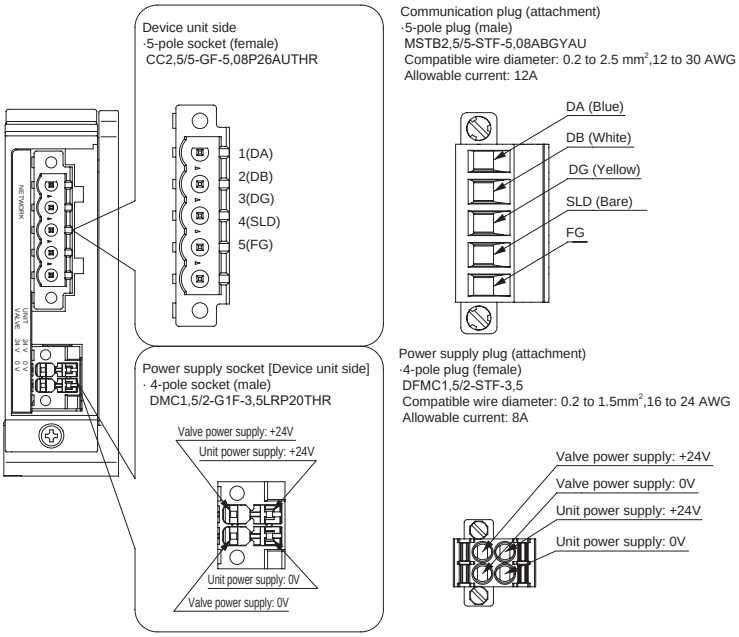

Communication socket pin array

Pin	Signal name (cable color)	Function
1	DA (Blue)	Communication line “DA”
2	DB (White)	Communication line “DB”
3	DG (Yellow)	Communication line “DG”
4	SLD (Bare)	Communication line “SLD”
5	FG	Ground

T8P*

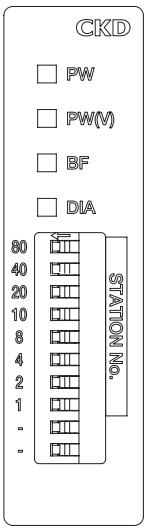

LED display description

LED name	Display description
PW	Lights when unit power is ON. Green lamp is ON when normal
PW(V)	Lights when valve power is ON. Green lamp is ON when normal (Cannot be monitored when the unit power is not ON)
BF	Lights when data cannot be transmitted or received. Red lamp is ON when abnormal
DIA	Lights when self-diagnostics error occurs. Red lamp is ON when abnormal

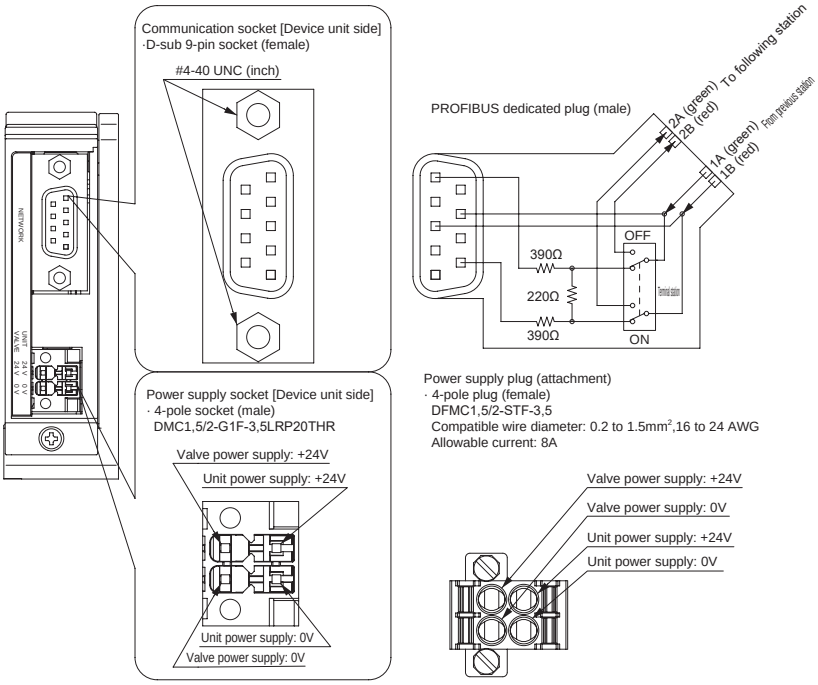

Communication socket pin array

Pin	Signal name	Function
1	Shield	Shield
2	M24	Vacant
3	RxD/TxD-P	Data reception/transmission (plus)
4	CNTR-P	Vacant
5	DGND	GND

Pin	Signal name	Function
6	VP	Service voltage of the terminator (+5V)
7	P24	Vacant
8	RxD/TxD-N	Data reception/transmission (minus)
9	CNTR-N	Vacant

Model No.	LED display	Wiring

T8EC*

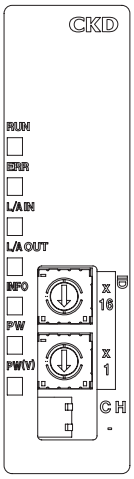

LED display description

LED name	Display description
RUN	Communication status of EtherCAT is indicated by the LED (green) state (OFF/ON/blinking) (green during normal communication)
ERR	Abnormal status of EtherCAT is indicated by the LED (red) state (OFF/ON/blinking) (OFF during normal communication)
L/A IN	Status of the Ethernet port (IN side) is indicated by the LED (green) state (OFF/ON/blinking)
L/A OUT	Status of the Ethernet port (OUT side) is indicated by the LED (green) state (OFF/ON/blinking)
INFO	Error status of the device unit is indicated by the LED (red) (OFF during normal communication)
PW	Lights when unit power is ON. Green lamp is ON when normal
PW(V)	Lights when valve power is ON. Green lamp is ON when normal (Cannot be monitored when the unit power is OFF)

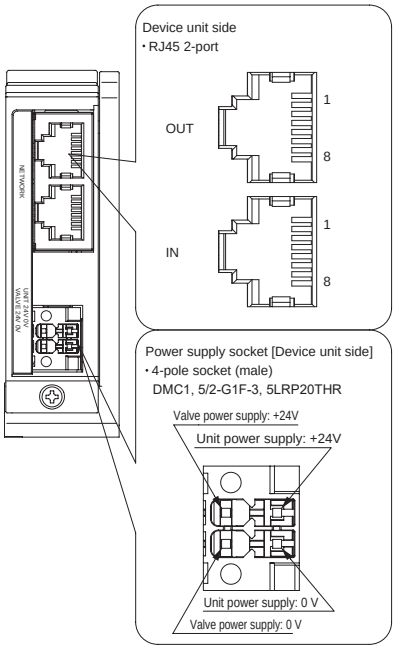

Power supply plug (accessory)
• 4-pole plug (female)
DFMC1,5/2-STF-3,5
Compatible wire diameter: 0.2 to 1.5mm^2, 16 to 24AWG
Allowable current: 8A

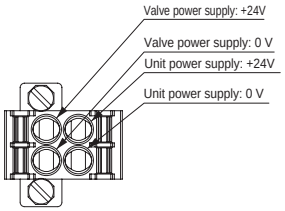

Communication socket pin array

Port	Pin	Signal name	Function
IN/OUT	1	TX+	Transmitted data, positive
	2	TX-	Transmitted data, negative
	3	RX+	Received data, positive
	4	Vacant	
	5	Vacant	
IN/OUT	6	RX-	Received data, negative
	7	Vacant	
	8	Vacant	

T8EN*

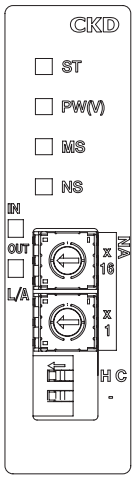

LED display description

LED name	Display description
ST	Status of the device unit is indicated by the LED color (green/yellow) and state (ON/blinking)
PW(V)	Lights when valve power is ON. Green lamp is ON when normal (Cannot be monitored when the unit power is OFF)
MS	Status of the device unit related to EtherNet/IP is indicated by the LED color (green/red) and state (ON/blinking)
NS	Status of the network related to EtherNet/IP is indicated by the LED color (green/red) and state (ON/blinking)
L/A IN	Status of the Ethernet port (IN side) is indicated by the LED color (green/yellow)
L/A OUT	Status of the Ethernet port (OUT side) is indicated by the LED color (green/yellow)

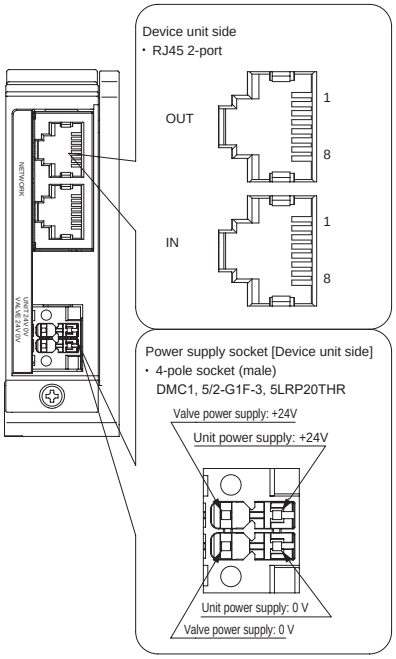

Power supply plug (accessory)
• 4-pole plug (female)
DFMC1, 5/2-STF-3,5
Compatible wire diameter: 0.2 to 1.5mm^2, 16 to 24AWG
Allowable current: 8A

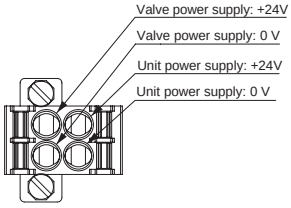

Communication socket pin array

Port	Pin	Signal name	Function
IN/OUT	1	TX+	Transmitted data, positive
	2	TX-	Transmitted data, negative
	3	RX+	Received data, positive
	4	Vacant	
	5	Vacant	
IN/OUT	6	RX-	Received data, negative
	7	Vacant	
	8	Vacant	

Model No.	LED display	Wiring

T8D*

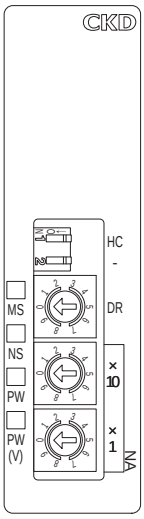

LED display description

LED name	Display description
MS	Status of the device unit related to DeviceNet is indicated by the LED color (green/red) and state (ON/blinking)
NS	Status of the network related to DeviceNet is indicated by the LED color (green/red) and state (ON/blinking)
PW	Lights when communication power is ON. Green lamp is ON when normal
PW(V)	Lights when valve power is ON. Green lamp is ON when normal (Cannot be monitored when communication power is OFF)

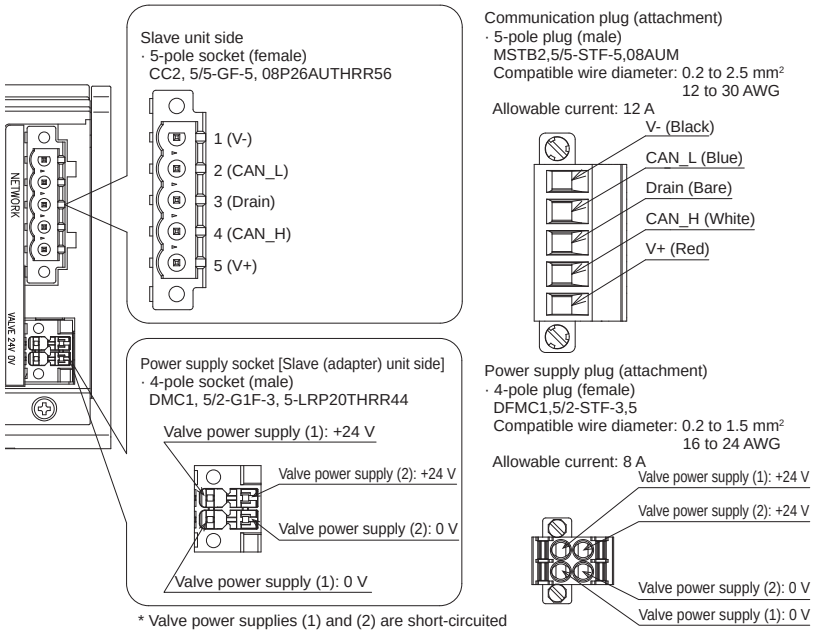

* Valve power supplies (1) and (2) are short-circuited in the interior.

Communication connector pin array

Pin	Signal name	Function
1	V-	Communication power supply (-)
2	CAN_L	Communication terminal (L)
3	Drain	Shield terminal
4	CAN_H	Communication terminal (H)
5	V+	Communication power supply (+)

T8EB*

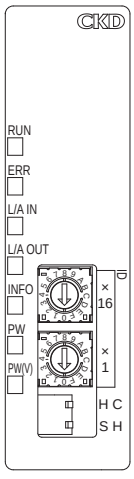

LED display description

LED name	Display description
RUN	Connection status of CC-Link IEF Basic is indicated by the LED state (ON/blinking)
ERR	Abnormal connection status of CC-Link IEF Basic is indicated by the LED state (ON/blinking)
L/A IN	Status of the Ethernet port (IN side) is indicated by the LED state (ON/blinking)
L/A OUT	Status of the Ethernet port (OUT side) is indicated by the LED state (ON/blinking)
INFO	Status of the device unit is indicated by the LED state (ON/blinking)
PW	Indicates the power status of the unit power supply. Lit in green when powered ON
PW(V)	Indicates the power status of the valve power supply. Green lamp ON when power ON (Cannot be monitored when the unit power is OFF)

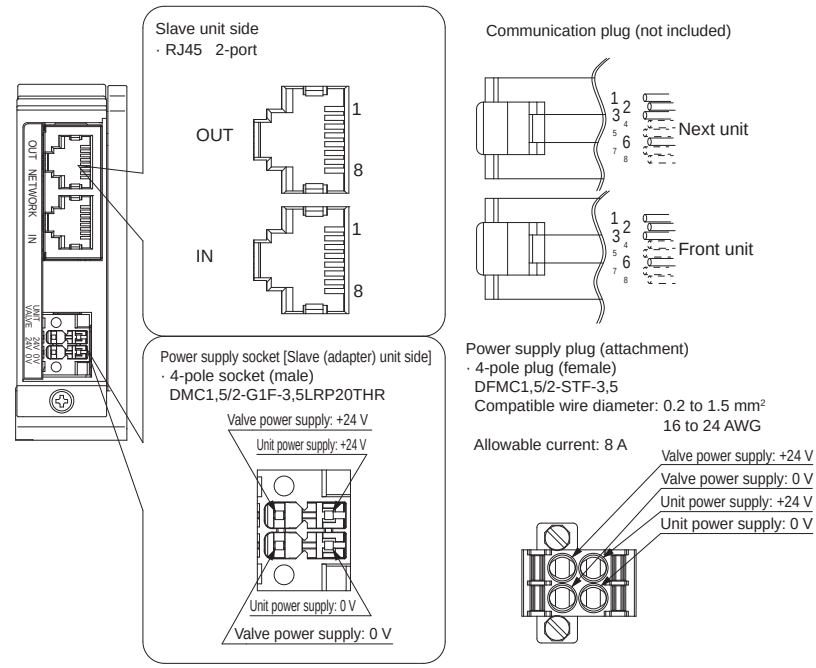

Communication plug pin array

Port	Pin	Signal name	Function
IN/OUT	1	TX+	Transmitted data, positive
	2	TX-	Transmitted data, negative
	3	RX+	Received data, positive
	4	Vacant	Vacant

Port	Pin	Signal name	Function
IN/OUT	5	Vacant	Vacant
	6	RX-	Received data, negative
	7	Vacant	Vacant
	8	Vacant	Vacant

Model No.	LED display	Wiring
T8EP*	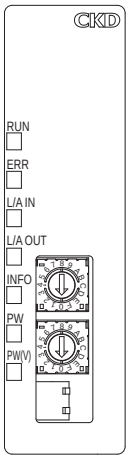	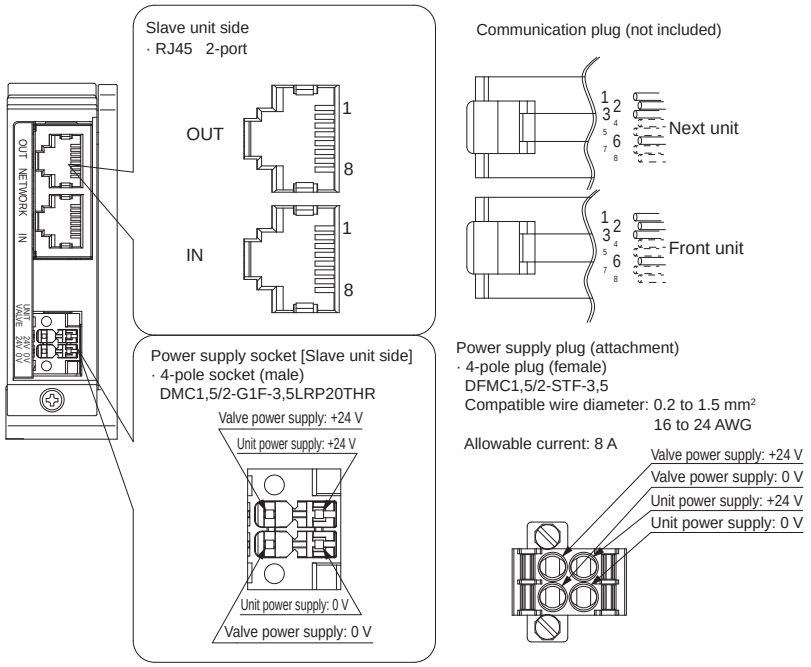

LED display description

LED name	Display description
RUN	Connection status of PROFINET is indicated by the LED state (ON/blinking)
ERR	Abnormal connection status of PROFINET is indicated by the LED state (ON/blinking)
L/A IN	Status of the Ethernet port (IN side) is indicated by the LED state (ON/blinking)
L/A OUT	Status of the Ethernet port (OUT side) is indicated by the LED state (ON/blinking)
INFO	Status of the device unit is indicated by the LED state (ON/blinking)
PW	Indicates the power status of the unit power supply. Lit in green when powered ON
PW(V)	Indicates the power status of the valve power supply. Green lamp ON when power ON (Cannot be monitored when the unit power is OFF)

communication plug pin array

Port	Pin	Signal name	Function
IN/OUT	1	TX+	Transmitted data, positive
	2	TX-	Transmitted data, negative
	3	RX+	Received data, positive
	4	Vacant	Vacant

Port	Pin	Signal name	Function
IN/OUT	5	Vacant	Vacant
	6	RX-	Received data, negative
	7	Vacant	Vacant
	8	Vacant	Vacant

Note: Wiring connection connectors
Connectors fitting the device unit side connectors listed below can be used.

Model No.	Device unit side connector model No.	Wiring side connector model No. (attachment/recommended product)
T7D (DeviceNet)	MSTB2.5/5-GF-5.08AU Phoenix Contact Corp.	MSTB2.5/5-STF-5.08AUM Phoenix Contact Corp.
T7G (CC-Link) T7L (SAVE NET)	SL5.08/5/90FAU Weidmüller Corp.	BLZP50.8Hc/05/180F SN OR BX Weidmüller Corp.
T7S (CompoNet)	XW7D-PB4-R OMRON Corporation	Communication plug is not included with this product. [Recommended communication plugs] DCN4-BR4 Flat connector plug (no sheath) OMRON Corporation DCN4-TB4 Open connector (terminal box) OMRON Corporation HCN-TB4LMZG-#B10 Open connector (terminal box): 10 pcs set Honda Tsushin Kogyo Co., Ltd. HCN-A4SMUG-#B10 Connector plug (VCTF/flat): 10 pcs set Honda Tsushin Kogyo Co., Ltd. [Recommended connectors for multiple wiring] DCN4-MD4 Connector for multiple wiring OMRON Corporation HCN-MD4SAG-#B10 Connector for multiple wiring: 10 pcs set Honda Tsushin Kogyo Co., Ltd.

Model No.		Device unit side connector model No.	Wiring side connector model No. (attachment/recommended product)
T8G** (CC-Link)	Communication	CC2, 5/5-GF-5, 08P26AUTHR [Phoenix Contact Corp.]	Attachment MSTB 2,5/5-STF-5,08 ABGY AU (1882832) [Phoenix Contact Corp.]
	Power supply	DMC1, 5/2-G1F-3, 5LRP20THR [Phoenix Contact Corp.]	Attachment DFMC1,5/2-STF-3,5 (1790292) [Phoenix Contact Corp.]
T8P** (PROFIBUS-DP)	Communication	D-SUB9 Pin (#4-40UNC: With inch type flange)	Communication plug is not included with this product. Recommended communication plugs SUBCON-PLUS-PROFIBUS/SC2 (2708232) [Phoenix Contact Corp.] SUBCON-PLUS-PROFIBUS/AX/SC (2744380) [Phoenix Contact Corp.]
	Power supply	DMC1, 5/2-G1F-3, 5LRP20THR [Phoenix Contact Corp.]	Attachment DFMC1,5/2-STF-3,5 (1790292) [Phoenix Contact Corp.]
T8EC** (EtherCAT)	Communication	RJ45 connector (8 pin x 2-port)	Communication plug is not included with this product. Cable with recommended plug IETP-SB-S***□ (both ends shielded ground) [JMACS] ***: Length □: Unit M = meter C = centimeter
	Power supply	DMC1, 5/2-G1F-3, 5LRP20THR [Phoenix Contact Corp.]	Attachment DFMC1,5/2-STF-3,5 (1790292) [Phoenix Contact Corp.]
T8EN** (EtherNet/IP)	Communication	RJ45 connector (8 pin x 2-port)	Communication plug is not included with this product. Cable with recommended plug IETP-SB-S*** □ (both ends shielded ground) [JMACS] ***: Length □: Unit M = meter C = centimeter
	Power supply	DMC1, 5/2-G1F-3, 5LRP20THR [Phoenix Contact Corp.]	Attachment DFMC1,5/2-STF-3,5 (1790292) [Phoenix Contact Corp.]
T8D** (DeviceNet)	Communication	CC 2,5/ 5-GF-5,08 P26 AUTHRR56 [Phoenix Contact Corp.]	Attachment MSTB2, 5/5-STF-5, 08AUM [Phoenix Contact Corp.]
	Power supply	DMC 1,5/2-G1F-3,5-LRP20THRR44 [Phoenix Contact Corp.]	Attachment DFMC1, 5/2-STF-3, 5 [Phoenix Contact Corp.]
T8EB** (CC-Link IEF Basic)	Communication	RJ45 connector (8 pin x 2-port)	Communication plug is not included with this product. Cable with recommended plug IETP-SB-S*** □ (both ends shielded ground) [JMACS] ***: Length □: Unit M = meter C = centimeter
	Power supply	DMC 1,5/2-G1F-3,5-LRP20THRR44 [Phoenix Contact Corp.]	Attachment DFMC1, 5/2-STF-3, 5 [Phoenix Contact Corp.]
T8EP** (PROFINET)	Communication	RJ45 connector (8 pin x 2-port)	Communication plug is not included with this product. Cable with recommended plug IETP-SB-S*** □ (both ends shielded ground) [JMACS] ***: Length □: Unit M = meter C = centimeter
	Power supply	DMC 1,5/2-G1F-3,5-LRP20THRR44 [Phoenix Contact Corp.]	Attachment DFMC1, 5/2-STF-3, 5 [Phoenix Contact Corp.]

M4G (metal base manifold)

* Refer to page 838 for MN4G (block manifold).

Pattern 1 Expansion to position equipped with spare wiring

The masking plate at the planned expansion position is equipped with spare wiring in advance. For the valve expansion method with spare wiring, follow the steps below.

❶ Remove the spare socket from the masking plate.

❷ Remove the masking plate from the base.

❸ Mount the valve for expansion and attach the socket.

Pattern 2 Expansion to position without spare wiring

When changing the single to the double, additional internal wiring to the b side solenoid for expansion is required. For the valve expansion method without spare wiring, follow the steps below.

❶ Remove the wiring cover and open the reduced wiring cover.

❷ Exchange the valve at the change position. Exchange the socket for the a side solenoid.

❸ Attach the socket for the b side solenoid (sold separately). Pass the wiring through the valve and pull it out to the a side.

❹ Route the wire inside the wiring block and insert the connector to the wiring base.

❺ Store the wiring in the reduced wiring cover, close the reduced wiring cover, and attach the electric cover.

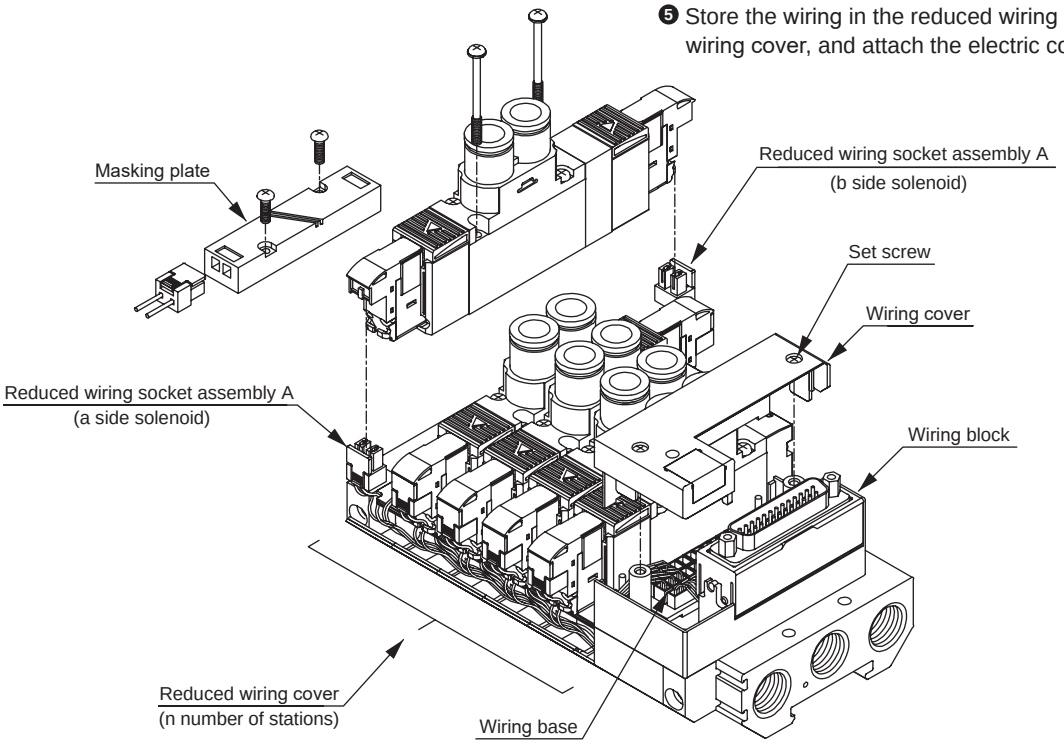

How to open and close the reduced wiring cover

How to open the reduced wiring cover

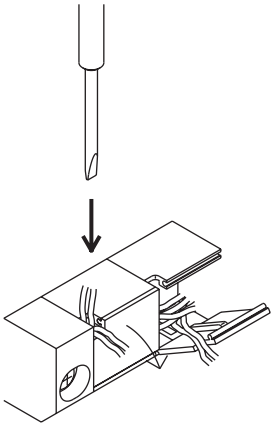

Catch the cable through hole of the reduced wiring cover with a precision screwdriver, etc., and open the cover. Do not use a pointed tool, so as not to damage the cable while catching the hole.

How to close the reduced wiring cover

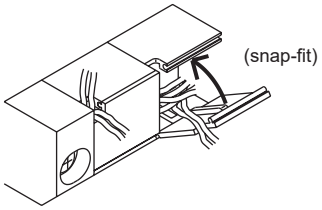

Pass the cable through the cable-through hole of the reduced wiring cover and close the cover. Avoid snagging the cable, and close the cover until it clicks into place.

Selection of model No. of socket assembly for expansion

For the socket assembly for expansion, specify a cable with appropriate length corresponding to the expansion position. Incorrect selection could cause disconnection or cable interference.
For the A type socket assembly model No., the expansion positions are set in order from the wiring block mounting side. Note that this is different from the setting method for the manifold valve station numbers, which are set in order from the left with the b side solenoid facing forward.

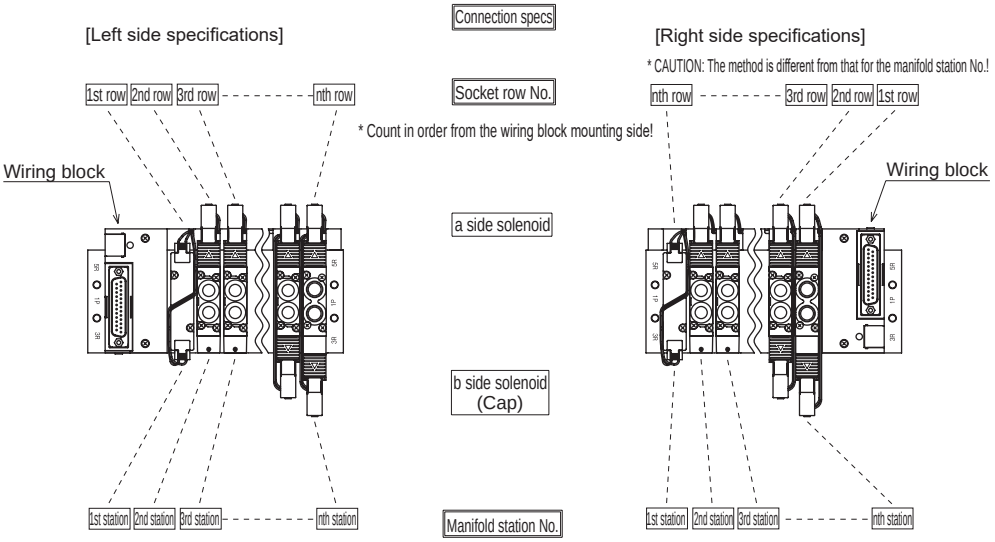

Note
1. T50/T51 is also the same

Model No. of socket assembly for expansion
A-connector socket assembly

4G [*1] R-SOCKET-ASSY-A [*2] [*3] - [*4]

*1 Series		*2: Connection specs		*3: Solenoid position		*4: No. of socket rows	
1	4G1	Blank	Left	A	a side	1	1st row
2	4G2	R	Right	B	b side	to	to
3	4G3					24	24th row

MN4G (exploded view of block manifold)

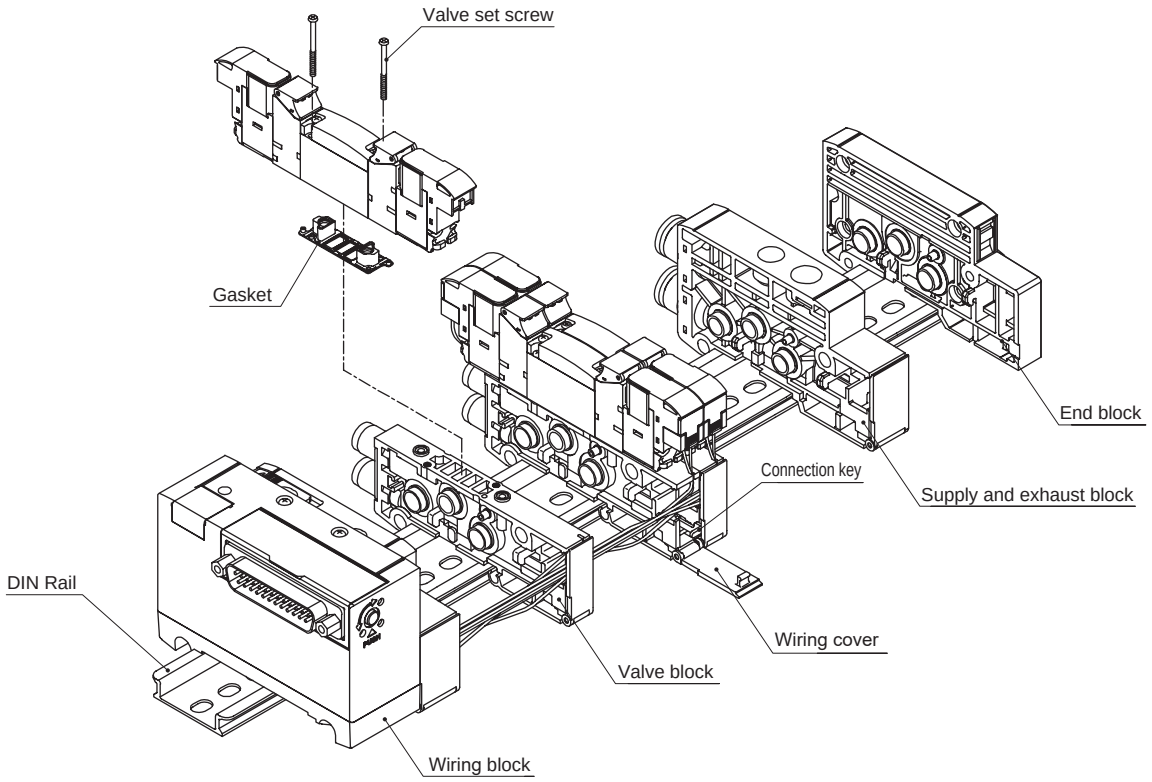

Example of disassembling: MN4GB1 For D sub-connector right side wiring specifications

Removing the wiring cover

T10R/T11R

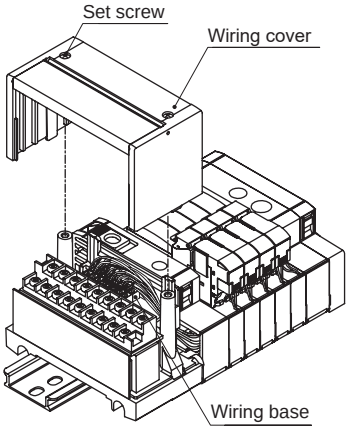

T30R/T5*R

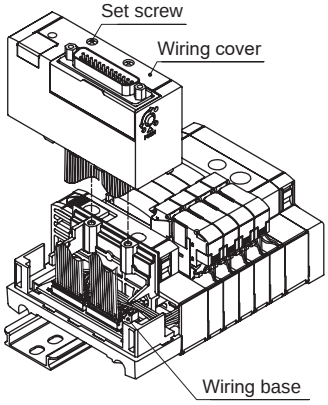

T7*

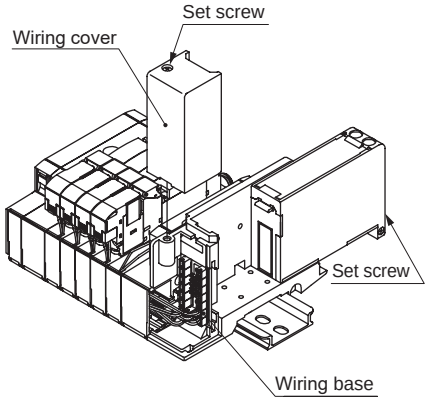

T8*

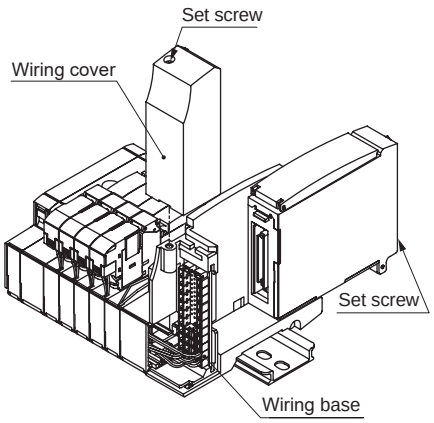

Replacing valves

Removing method
(1) Remove the socket (signal line).
(2) Loosen the mounting screws (2 positions).
(3) Remove the valve from the valve block.

Installation method
Follow the removal procedure in reverse.
Refer to the text at right for the recommended tightening torque for the mounting screw.

Note) The valve block differs between single wiring (V1) and double wiring (V2). Accordingly, when changing from single to double or from double to single, exchange the entire discrete valve block with solenoid valve.

Recommended tightening torque for the valve mounting screw

	Size	Recommended tightening torque (N·m)
4G1	M1.7	0.18 to 0.22
4G2	M2.5	0.35 to 0.40

Increasing the valve blocks

①Loosen the DIN rail fixing screw.
②Open the reduced wiring cover
③Pull the connecting key for the position to be expanded until it clicks, and disengage the connection between blocks.
④Remove the cover of the wiring block to expose the wiring base.
[Removing the wiring cover]
⑤Connect the signal line (socket assembly) [*1] to the wiring base [*2], and assemble the signal line to the valve block. (Fig. 1)
*1 [Refer to Selection of model No. of socket assembly for expansion shown below]
*2 [Refer to Instructions for connection to wiring base on pages 840 to 843]
⑥Mount the valve block to be added to the DIN rail. (Fig. 2)
⑦Press so that there is no gap between blocks, and press the key to engage.
⑧With care not to catch the signal line, close the wiring cover and tighten the cover of the wiring block.
(Tightening torque: 0.35 to 0.50 N·m)
⑨Press the operation button in the direction of the arrow.
Built-in DIN rail fixing bracket slides into the fixed position.
⑩While holding down so that there is no gap between blocks, tighten DIN rail set screws. At this time, ensure that the position of the operation button is the fixed side.
(Recommended tightening torque: 1.2 to 1.6 N·m).
* Up to 2 stations can be expanded before the furthest position from the wiring block.

Fig. 1

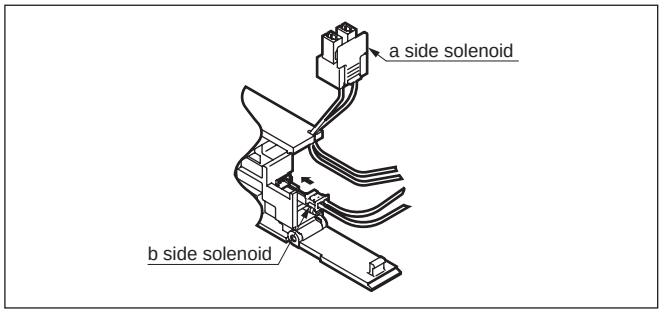

Fig. 2

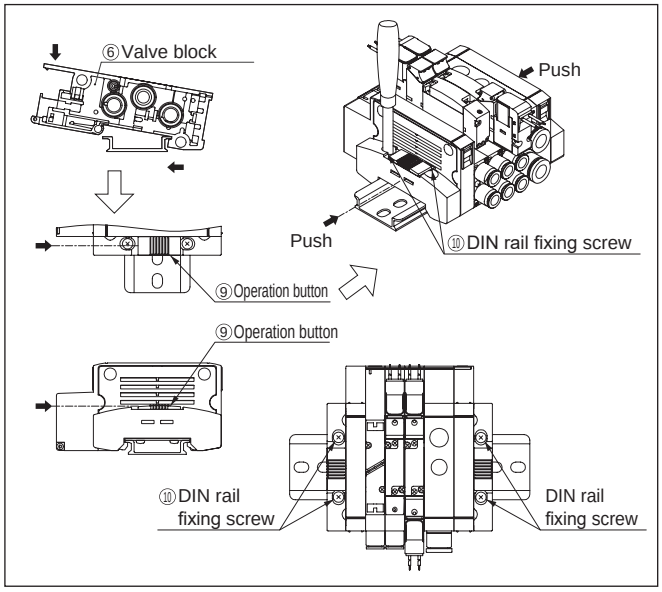

Selection of model No. of socket assembly for expansion

Calculate the distance W between the expansion position and the wiring block (Fig. 3), and select an appropriate cable length from [Table 1].
Note that the required socket assembly differs between the a side solenoid and b side solenoid.
While Fig. 3 shows the wiring block with left side specifications, similarly calculate the distance W between the expansion position and the wiring block for the right side specifications.

Calculation of W
· For MN4G1
W=(10.5xn)+(16xm)+(10.5xl)
· For MN4G2
W=(16xn)+(18xm)+(10.5xl)
n: number of valve blocks m: number of supply and exhaust blocks l: number of partition blocks
· For MN4GX
Calculate W using the mix block width of 16.

[Model No. of socket assembly for expansion]
For a side solenoid
N4GR - SOCKET - ASSY - A - Selection No.
For b side solenoid
N4GR - RELAY - SOCKET - Selection No.

Fig. 3

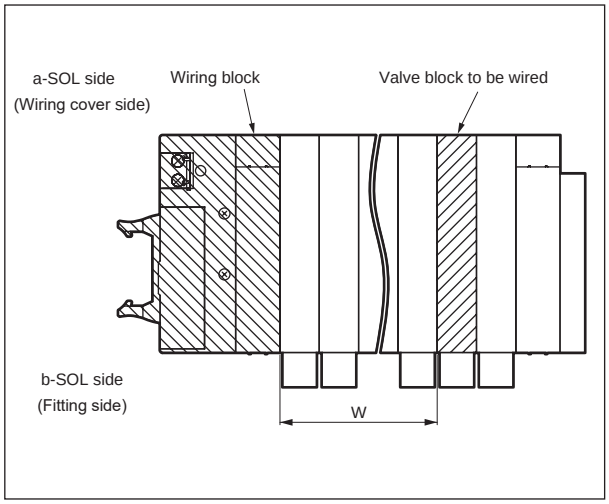

[Table 1] W length - selection No. compatibility table

Selection No.	Type of wiring		
	T10/11(R)	T30/5*/6* (R)	T7*/T8*
2		0	25 or less
3	20 or less	Over 0 to 30	Over 25 to 55
4	Over 20 to 70	Over 30 to 80	Over 55 to 105
5	Over 70 to 120	Over 80 to 130	Over 105 to 155
6	Over 120 to 170	Over 130 to 180	Over 155 to 205
7	Over 170 to 260	Over 180 to 270	Over 205 to 295
8	Over 260 to 350	Over 270 to 360	Over 295 to 385
9	Over 350 to 450	Over 360 to 460	Over 385 to 485
10	Over 450 to 570	Over 460 to 580	Over 485 to 605

Instructions for connecting wiring base (standard wiring)

The corresponding rules for connector and valve on the wiring base vary depending on the reduced wiring specifications (T10, T11, T30, T50, T51, T52, T53, T6G1, T7*, T8*). For connector wiring, check the connector No. printed on the base.
For wiring of mix (consolidation), the manifold configuration as shown in the right figure is indicated as an example.

◦ Manifold configuration (Example)

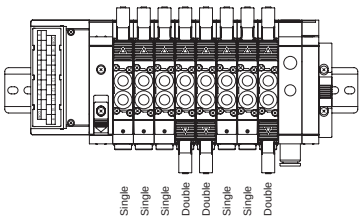

T10

Wiring base assembly

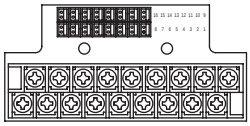

Wire in the order shown by the arrow

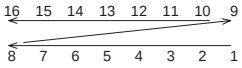

Correspondence to valve

1) For single SOL only (MF station No. up to 16 stations)

Term. block No.	16	15	14	13	12	11	10	9
Valve No.	16a	15a	14a	13a	12a	11a	10a	9a
Term. block No.	8	7	6	5	4	3	2	1
Valve No.	8a	7a	6a	5a	4a	3a	2a	1a

2) For double SOL only (MF station No. up to 8 stations)

Term. block No.	16	15	14	13	12	11	10	9
Valve No.	8b	8a	7b	7a	6b	6a	5b	5a
Term. block No.	8	7	6	5	4	3	2	1
Valve No.	4b	4a	3b	3a	2b	2a	1b	1a

3) For mix (consolidation) (solenoid No. up to 16 positions)

Term. block No.	16	15	14	13	12	11	10	9
Valve No.	(Blank)	(Blank)	(Blank)	(Blank)	(Blank)	8b	8a	7a
Term. block No.	8	7	6	5	4	3	2	1
Valve No.	6a	5b	5a	4b	4a	3a	2a	1a

* Rules for wiring!

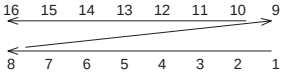

Insert in the order shown by the arrow. (in order of connector No.)

T11

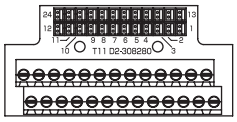

Wire in the order shown by the arrow

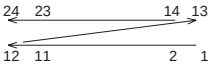

Correspondence to valve

1) For single SOL only (MF station No. up to 24 stations)

Connector No.	24	23	22	21	20	19	18	17	16	15	14	13
Valve No.	24a	23a	22a	21a	20a	19a	18a	17a	16a	15a	14a	13a
Connector No.	12	11	10	9	8	7	6	5	4	3	2	1
Valve No.	12a	11a	10a	9a	8a	7a	6a	5a	4a	3a	2a	1a

2) For double SOL only (MF station No. up to 12 stations)

Connector No.	24	23	22	21	20	19	18	17	16	15	14	13
Valve No.	12b	12a	11b	11a	10b	10a	9b	9a	8b	8a	7b	7a
Connector No.	12	11	10	9	8	7	6	5	4	3	2	1
Valve No.	6b	6a	5b	5a	4b	4a	3b	3a	2b	2a	1b	1a

3) For mix (consolidation) (solenoid No. up to 24 positions)

Connector No.	24	23	22	21	20	19	18	17	16	15	14	13
Valve No.	(Blank)	(Blank)	(Blank)	(Blank)	(Blank)	(Blank)	(Blank)	(Blank)	(Blank)	(Blank)	(Blank)	(Blank)
Connector No.	12	11	10	9	8	7	6	5	4	3	2	1
Valve No.	8b	8a	7a	6a	5b	5a	4b	4a	3a	2a	1a	

* Rules for wiring!

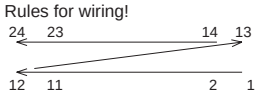

Insert in the order shown by the arrow.

T30

Wiring base assembly

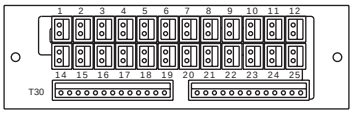

Wire in the order shown by the arrow

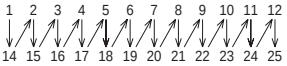

Correspondence to valve

1) For single SOL (MF station No. up to 24 stations)

Connector No.	1	2	3	4	5	6	7	8	9	10	11	12
Valve No.	1a	3a	5a	7a	9a	11a	13a	15a	17a	19a	21a	23a
Connector No.	14	15	16	17	18	19	20	21	22	23	24	25
Valve No.	2a	4a	6a	8a	10a	12a	14a	16a	18a	20a	22a	24a

2) For double SOL (MF station No. up to 12 stations)

Connector No.	1	2	3	4	5	6	7	8	9	10	11	12
Valve No.	1a	2a	3a	4a	5a	6a	7a	8a	9a	10a	11a	12a
Connector No.	14	15	16	17	18	19	20	21	22	23	24	25
Valve No.	1b	2b	3b	4b	5b	6b	7b	8b	9b	10b	11b	12b

3) For mix (consolidation) (solenoid No. up to 24 positions)

Connector No.	1	2	3	4	5	6	7	8	9	10	11	12
Valve No.	1a	3a	4b	5b	7a	8b	(Blank)	(Blank)	(Blank)	(Blank)	(Blank)	(Blank)
Connector No.	14	15	16	17	18	19	20	21	22	23	24	25
Valve No.	2a	4a	5a	6a	8a	(Blank)	(Blank)	(Blank)	(Blank)	(Blank)	(Blank)	(Blank)

* Rules for wiring!

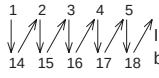

Insert in the order shown by the arrow.

T50/T6G1

Wiring base assembly

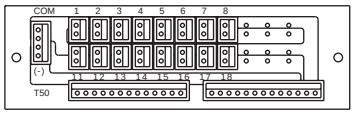

Wire in the order shown by the arrow

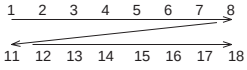

Correspondence to valve

1) For single SOL (MF station No. up to 16 stations)

Connector No.	1	2	3	4	5	6	7	8
Valve No.	1a	2a	3a	4a	5a	6a	7a	8a
Connector No.	11	12	13	14	15	16	17	18
Valve No.	9a	10a	11a	12a	13a	14a	15a	16a

2) For double SOL (MF station No. up to 8 stations)

Connector No.	1	2	3	4	5	6	7	8
Valve No.	1a	1b	2a	2b	3a	3b	4a	4b
Connector No.	11	12	13	14	15	16	17	18
Valve No.	5a	5b	6a	6b	7a	7b	8a	8b

3) For mix (consolidation) (solenoid No. up to 16 positions)

Connector No.	1	2	3	4	5	6	7	8
Valve No.	1a	2a	3a	4a	4b	5a	5b	6a
Connector No.	11	12	13	14	15	16	17	18
Valve No.	7a	8a	8b	(Blank)	(Blank)	(Blank)	(Blank)	(Blank)

* Rules for wiring: Insert in the order of connector No.!

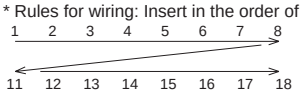

T51

Wiring base assembly

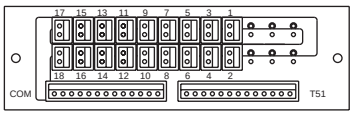

Wire in the order shown by the arrow

17 15 13 11 9 7 5 3 1
18 16 14 12 10 8 6 4 2

Correspondence to valve

1) For single SOL (MF station No. up to 18 stations)

Connector No.	17	15	13	11	9	7	5	3	1
Valve No.	17a	15a	13a	11a	9a	7a	5a	3a	1a
Connector No.	18	16	14	12	10	8	6	4	2
Valve No.	18a	16a	14a	12a	10a	8a	6a	4a	2a

2) For double SOL (MF station No. up to 9 stations)

Connector No.	17	15	13	11	9	7	5	3	1
Valve No.	9a	8a	7a	6a	5a	4a	3a	2a	1a
Connector No.	18	16	14	12	10	8	6	4	2
Valve No.	9b	8b	7b	6b	5b	4b	3b	2b	1b

3) For mix (consolidation) (solenoid No. up to 18 positions)

Connector No.	17	15	13	11	9	7	5	3	1
Valve No.	(Blank)	(Blank)	(Blank)	8b	7a	5b	4b	3a	1a
Connector No.	18	16	14	12	10	8	6	4	2
Valve No.	(Blank)	(Blank)	(Blank)	(Blank)	8a	6a	5a	4a	2a

* Rules for wiring!
Insert in the order shown by the arrow. (in order of connector No.)

9 7 5 3 1
10 8 6 4 2

T52

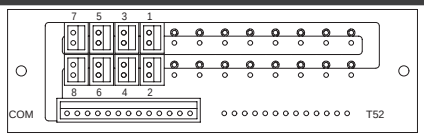

7 5 3 1
8 6 4 2

1) For single SOL (MF station No. up to 8 stations)

Connector No.	7	5	3	1
Valve No.	7a	5a	3a	1a
Connector No.	8	6	4	2
Valve No.	8a	6a	4a	2a

2) For double SOL (MF station No. up to 4 stations)

Connector No.	7	5	3	1
Valve No.	4a	3a	2a	1a
Connector No.	8	6	4	2
Valve No.	4b	3b	2b	1b

3) For mix (consolidation) (solenoid No. up to 8 positions)

Connector No.	7	5	3	1
Valve No.	5b	4b	3a	1a
Connector No.	8	6	4	2
Valve No.	6a	5a	4a	2a

* Rules for wiring!
Insert in the order shown by the arrow. (in order of connector No.)

7 5 3 1
8 6 4 2

T53

Wiring base assembly

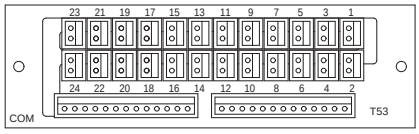

Wire in the order shown by the arrow

23 21 19 17 15 13 11 9 7 5 3 1
24 22 20 18 16 14 12 10 8 6 4 2

Correspondence to valve

1) For single SOL (MF station No. up to 24 stations for MN4G1 and up to 20 stations for MN4G2))

Connector No.	23	21	19	17	15	13	11	9	7	5	3	1
Valve No.	23a	21a	19a	17a	15a	13a	11a	9a	7a	5a	3a	1a
Connector No.	24	22	20	18	16	14	12	10	8	6	4	2
Valve No.	24a	22a	20a	18a	16a	14a	12a	10a	8a	6a	4a	2a

2) For double SOL (MF station No. up to 12 stations)

Connector No.	23	21	19	17	15	13	11	9	7	5	3	1
Valve No.	12a	11a	10a	9a	8a	7a	6a	5a	4a	3a	2a	1a
Connector No.	24	22	20	18	16	14	12	10	8	6	4	2
Valve No.	12b	11b	10b	9b	8b	7b	6b	5b	4b	3b	2b	1b

3) For mix (consolidation) (solenoid No. up to 24 positions)

Connector No.	23	21	19	17	15	13	11	9	7	5	3	1
Valve No.	(Blank)	(Blank)	(Blank)	(Blank)	(Blank)	(Blank)	8b	7a	5b	4b	3a	1a
Connector No.	24	22	20	18	16	14	12	10	8	6	4	2
Valve No.	(Blank)	(Blank)	(Blank)	(Blank)	(Blank)	(Blank)	(Blank)	8a	6a	5a	4a	2a

* Rules for wiring!
Insert in the order shown by the arrow. (in order of connector No.)

23 21 19 17 15 13 11 9 7 5 3 1
24 22 20 18 16 14 12 10 8 6 4 2

T7*

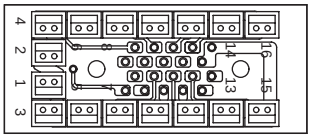

4 6 8 10 12 14 16
2
1
3 5 7 9 11 13 15

1) For single SOL only (MF station No. up to 16 stations)

Connector No.	2	4	6	8	10	12	14	16
Valve No.	2a	4a	6a	8a	10a	12a	14a	16a
Connector No.	1	3	5	7	9	11	13	15
Valve No.	1a	3a	5a	7a	9a	11a	13a	15a

2) For double SOL only (MF station No. up to 8 stations)

Connector No.	2	4	6	8	10	12	14	16
Valve No.	1b	2b	3b	4b	5b	6b	7b	8b
Connector No.	1	3	5	7	9	11	13	15
Valve No.	1a	2a	3a	4a	5a	6a	7a	8a

3) For mix (consolidation) (solenoid No. up to 16 positions)

Connector No.	2	4	6	8	10	12	14	16
Valve No.	2a	4a	5a	6a	8a	(Blank)	(Blank)	(Blank)
Connector No.	1	3	5	7	9	11	13	15
Valve No.	1a	3a	4b	5b	7a	8b	(Blank)	(Blank)

* Rules for wiring!
Insert in the order shown by the arrow. (in order of connector No.)

2 4 6 8 10
1 3 5 7 9

T8*

Wiring base assembly

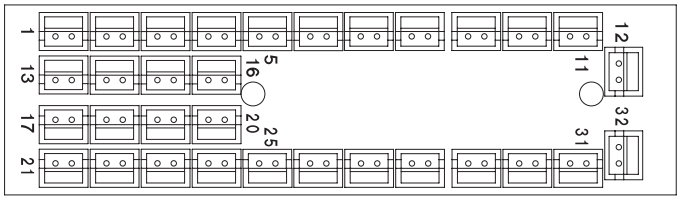

Wire in the order shown by the arrow

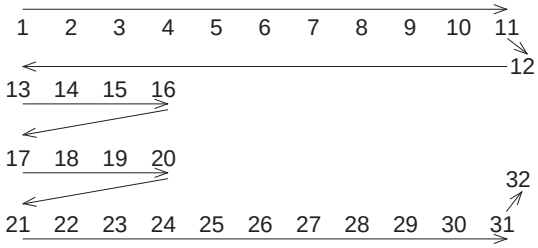

Correspondence to valve

1) For single SOL only (MF station No.: up to 24 stations for MN4G1 and up to 20 stations for MN4G2))

Pin No.	1	2	3	4	5	6	7	8	9	10	11	12	13	14	15	16
Valve No.	1a	2a	3a	4a	5a	6a	7a	8a	9a	10a	11a	12a	13a	14a	15a	16a
Pin No.	17	18	19	20	21	22	23	24	25	26	27	28	29	30	31	32
Valve No.	17a	18a	19a	20a	21a	22a	23a	24a	(Blank)	(Blank)	(Blank)	(Blank)	(Blank)	(Blank)	(Blank)	(Blank)

2) For double SOL only (MF station No. up to 16 stations)

Pin No.	1	2	3	4	5	6	7	8	9	10	11	12	13	14	15	16
Valve No.	1a	1b	2a	2b	3a	3b	4a	4b	5a	5b	6a	6b	7a	7b	8a	8b
Pin No.	17	18	19	20	21	22	23	24	25	26	27	28	29	30	31	32
Valve No.	9a	9b	10a	10b	11a	11b	12a	12b	13a	13b	14a	14b	15a	15b	16a	16b

Wire in the order shown by the arrow

3) For mix (consolidation) (solenoid No. up to 32 positions)

Pin No.	1	2	3	4	5	6	7	8	9	10	11	12	13	14	15	16
Valve No.	1a	2a	3a	4a	4b	5a	5b	6a	7a	8a	8b	(Blank)	(Blank)	(Blank)	(Blank)	(Blank)
Pin No.	17	18	19	20	21	22	23	24	25	26	27	28	29	30	31	32
Valve No.	(Blank)	(Blank)	(Blank)	(Blank)	(Blank)	(Blank)	(Blank)	(Blank)	(Blank)	(Blank)	(Blank)	(Blank)	(Blank)	(Blank)	(Blank)	(Blank)

* Rules for wiring!

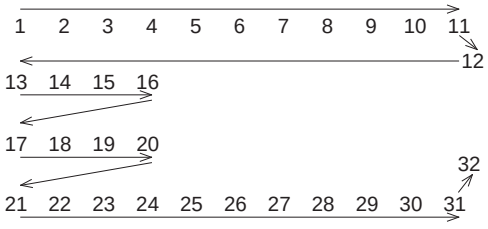

Insert in the order shown by the arrow.
(in order of connector No.)

Instructions for connecting wiring base (double wiring)

The double wiring specifications correspond to the wiring of the double solenoid, regardless of the switching position classification of the solenoid valve to be mounted. Accordingly, the double SOL only of double wiring and standard wiring have the same wiring. As an example, T53 is shown in the figure below. Refer to this example.

T53 (example)

Wiring base assembly

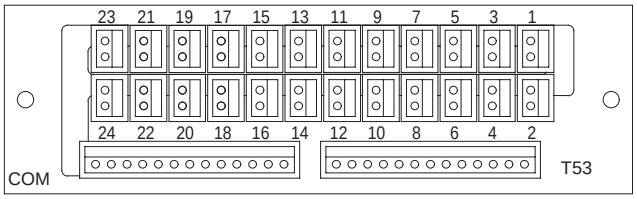

Wire in the order shown by the arrow

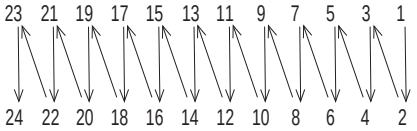

Correspondence to valve

1) For single SOL (MF station No. up to 12 stations)

Connector No.	23	21	19	17	15	13	11	9	7	5	3	1
Valve No.	12a	11a	10a	9a	8a	7a	6a	5a	4a	3a	2a	1a
Connector No.	24	22	20	18	16	14	12	10	8	6	4	2
Valve No.	(Blank)	(Blank)	(Blank)	(Blank)	(Blank)	(Blank)	(Blank)	(Blank)	(Blank)	(Blank)	(Blank)	(Blank)

2) For double SOL (MF station No. up to 12 stations)

Connector No.	23	21	19	17	15	13	11	9	7	5	3	1
Valve No.	12a	11a	10a	9a	8a	7a	6a	5a	4a	3a	2a	1a
Connector No.	24	22	20	18	16	14	12	10	8	6	4	2
Valve No.	12b	11b	10b	9b	8b	7b	6b	5b	4b	3b	2b	1b

Wire in the order shown by the arrow

3) For mix (consolidation) (solenoid No. up to 24 positions)

Connector No.	23	21	19	17	15	13	11	9	7	5	3	1
Valve No.	(Blank)	(Blank)	(Blank)	(Blank)	8a	7a	6a	5a	4a	3a	2a	1a
Connector No.	24	22	20	18	16	14	12	10	8	6	4	2
Valve No.	(Blank)	(Blank)	(Blank)	(Blank)	8b	(Blank)	(Blank)	5b	4b	(Blank)	(Blank)	(Blank)

* Rules for wiring!
Insert in the order shown by the arrow.
(in order of connector No.)

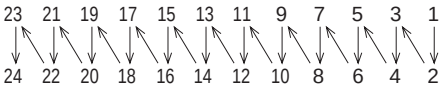

(1) The cylinder average speed is obtained from the combination of 4G series and piping system. It is expressed as the cylinder's piston speed calculated by dividing the stroke length by the time that the piston rod takes from start to end of movement with the cylinder rod installed facing upward. When the load factor is 50%, the average speed should be approximately the cylinder's piston speed multiplied by 0.5.
(2) The cylinder average speed described in "Pneumatic system device selection guide" is that when one cylinder is operated alone.
(3) The effective cross-sectional area of the solenoid valve used for the calculation below is the 2-position value.
(4) This selection guide is for reference. With the CKD sizing program, confirm conditions to be actually used.
(5) Effective cross-sectional area S and sonic conductance C are converted as S ≈ 5.0 x C.

Standard system table 4G (metal base)

* Refer to page 846 for MN4G (block manifold).

[Single unit]

Series	Body piping					
	Model No.	System No.	Speed controller	Silencer	Piping	Composite effective cross-sectional area (mm^2) pipe length 1 m
4G1	4GA110R-C4	A1	SC3W-M5-4	SLM-M5	ø4xø2.5	1.0
	4GA110R-C6	B1	SC1-6	SLM-M5	ø6xø4	2.5
4G2	4GA210R-C6	B2	SC1-6	SLW-6S	ø6xø4	4.3
	4GA210R-C8	B3	SC1-8	SLW-6S	ø8xø5.7	6.5
4G3	4GA310R-C8	C1	SC1-8	SLW-8S	ø8xø5.7	8.3
	4GA310R-C10	C2	SC1-10	SLW-8S	ø10xø7.2	11.6
	4GA310R-C10	C3	SC1-15	SLW-8S	ø10xø7.2	12.7

Series	Base piping					
	Model No.	System No.	Speed controller	Silencer	Piping	Composite effective cross-sectional area (mm^2) pipe length 1 m
4G1	4GB110R-06	A2	SC3W-6-4	SLW-6S	ø4xø2.5	1.6
	4GB110R-06	B4	SC1-6	SLW-6S	ø6xø4	3.6
4G2	4GB210R-08	B5	SC1-8	SLW-8S	ø6xø4	5.0
	4GB210R-08	C4	SC1-10	SLW-8S	ø8xø5.7	8.3
4G3	4GB310R-10	C5	SC1-10	SLW-10L	ø10xø7.2	12.6
	4GB310R-10	C6	SC1-15	SLW-10L	ø12xø8.9	15.9

* The system No. is indicated in the following graph.

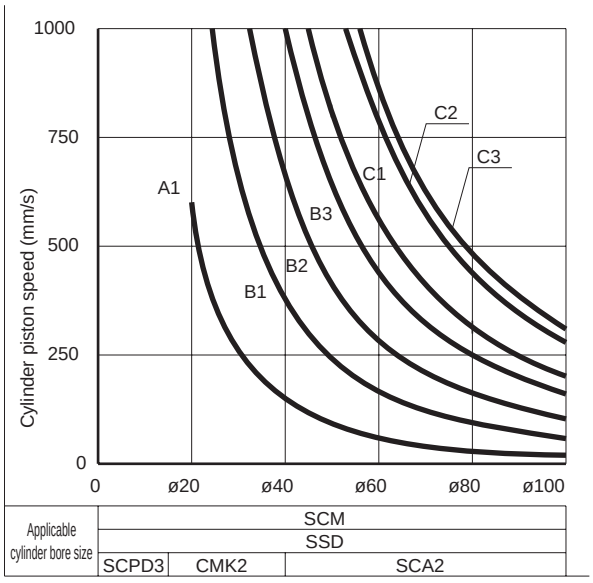

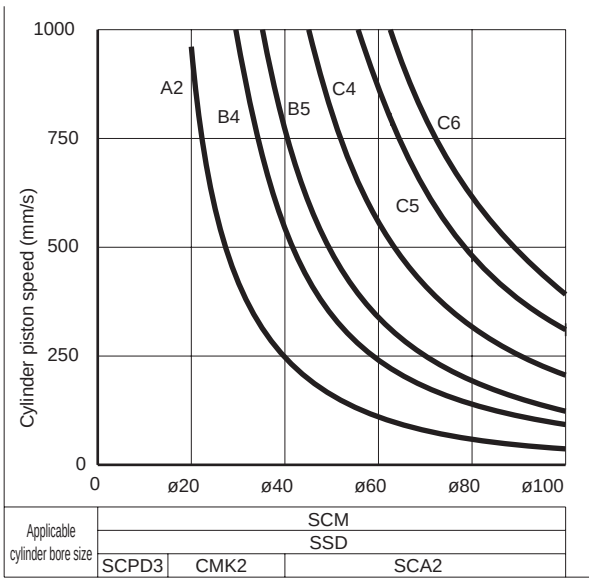

[Manifold] (With internal exhaust check valve)

Series	Body piping					
	Model No.	System No.	Speed controller	Silencer	Piping	Composite effective cross-sectional area (mm2) pipe length 1 m
4G1	M4GA110R-C4	A3	SC3W-M5-4	SLW-6S	ø4xø2.5	1.0
	M4GA110R-C6	B6	SC1-6	SLW-6S	ø6xø4	2.8
4G2	M4GA210R-C6	B7	SC1-6	SLW-8S	ø6xø4	4.2
	M4GA210R-C8	B8	SC1-8	SLW-8S	ø8xø5.7	6.2
4G3	M4GA310R-C8	C7	SC1-8	SLW-10L	ø8xø5.7	7.5
	M4GA310R-C10	C8	SC1-10	SLW-10L	ø10xø7.2	9.8
	M4GA310R-C10	C9	SC1-15	SLW-10L	ø10xø7.2	10.5
Series	**Base piping**					
	Model No.	**System No.**	**Speed controller**	**Silencer**	**Piping**	**Composite effective cross-sectional area (mm2) pipe length 1 m**
4G1	M4GB110R-C4	A4	SC3W-6-4	SLW-6S	ø4xø2.5	1.5
	M4GB110R-C6	B9	SC1-6	SLW-6S	ø6xø4	2.8
4G2	M4GB210R-C6	B10	SC1-8	SLW-8S	ø6xø4	4.6
	M4GB210R-C8	C10	SC1-10	SLW-8S	ø8xø5.7	6.7
4G3	M4GB310R-C10	C11	SC1-10	SLW-10L	ø10xø7.2	10.0
	M4GB310R-C10	C12	SC1-15	SLW-10L	ø12xø8.9	11.5

* The system No. is indicated in the following graph.

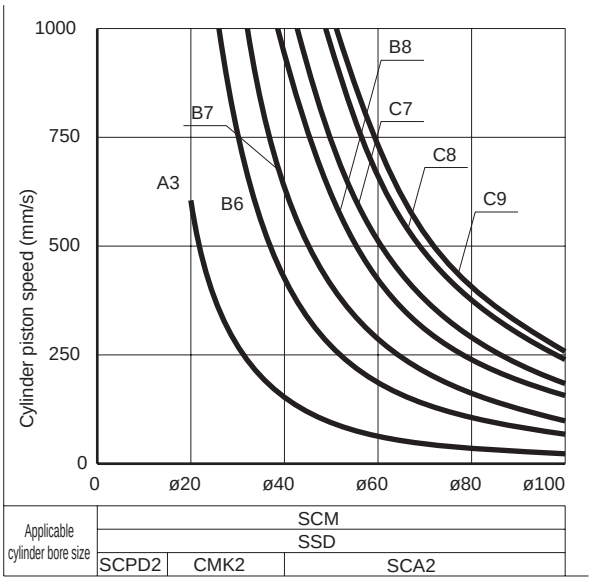

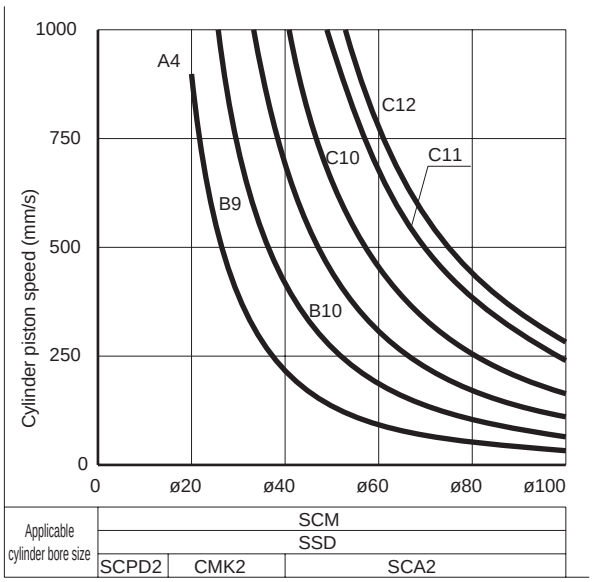

Standard system table **MN4G (block manifold)** (with internal exhaust check valve)

1. Common exhaust

Series	Solenoid valve port size	System No.	Speed controller	Cylinder piping Pipe length 1 m	Common exhaust piping	Composite effective cross-sectional area (mm^2)
MN4G1	C4	A1	SC3W-M5-4	ø4xø2.5	ø6xø4x3m	1.0
	C4	A2	SC3W-6-4	ø4xø2.5	ø6xø4x3m	1.4
	C6	B1	SC1-6	ø6xø4	ø8xø5.7x3m	2.7
MN4G2	C6	B2	SC1-6	ø6xø4	ø8xø5.7x3m	3.8
	C8	B3	SC1-8	ø8xø5.7	ø10xø7.2x3m	5.9

2. Atmospheric release exhaust (integrated exhaust muffler)

Series	Solenoid valve port size	System No.	Speed controller	Cylinder piping pipe length 1 m	End block	Composite effective cross-sectional area (mm^2)
MN4G1	C4	A3	SC3W-M5-4	ø4xø2.5	N4G1-EX	1.0
	C4	A4	SC3W-6-4	ø4xø2.5		1.5
	C6	B4	SC1-6	ø6xø4		2.9
MN4G2	C6	B5	SC1-6	ø6xø4	N4G2-EX	4.2
	C8	B6	SC1-8	ø8xø5.7		5.9

3. Exhaust with silencer

Series	Model No.	System No.	Speed controller	Cylinder piping pipe length 1 m	Silencer	Composite effective cross-sectional area (mm^2)
MN4G1	C4	A5	SC3W-M5-4	ø4xø2.5	SLW-H6	1.0
	C4	A6	SC3W-6-4	ø4xø2.5	SLW-H6	1.5
	C6	B7	SC1-6	ø6xø4	SLW-H8	2.7
MN4G2	C6	B8	SC1-6	ø6xø4	SLW-H8	3.8
	C8	B9	SC1-8	ø8xø5.7	SLW-H10	6.0

1. Common exhaust

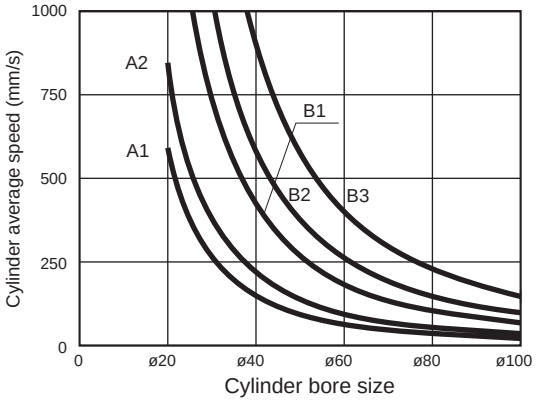

2. Atmospheric release exhaust (integrated exhaust muffler)

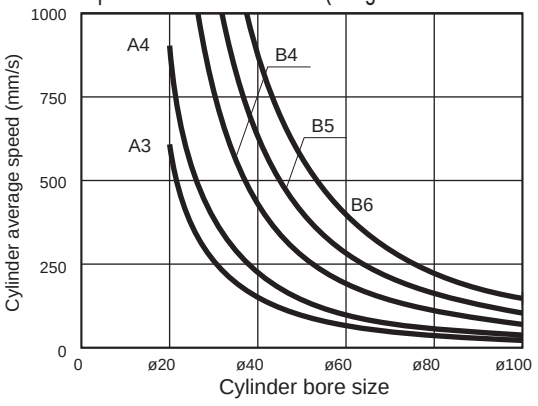

3. Exhaust with silencer

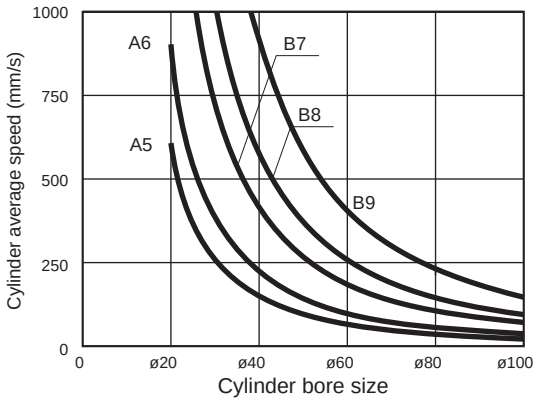

● Silencer

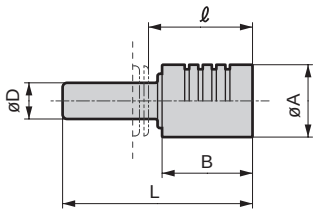

Model No.	D	L	A	B	ℓ
SLW-H6	ø6	41	16	20	23.5
SLW-H8	ø8	42	16	20	23
SLW-H10	ø10	53	20	27	31.5

Device selection guide is used to select the optimum model at a glance.

● Fluid control components selection

Whether the cylinder bore size and cylinder being used are driven with relative high or low speed is determined as a condition. Using the table shown below as a reference, select the theoretical reference speed of the cylinder.

Degree of cylinder speed	Theoretical reference speed (mm/s)
Low speed	250
Medium speed	500
High speed	750
Ultra high speed	1,000

Using the table in the device selection guide 1 (pages 848 and 849), select the equivalent bore size of cylinder tube and the proper standard system No. corresponding to theoretical reference speed.

● Theoretical reference speed: indicates degree of cylinder speed, expressed as the following formula. (This value matches speed with no load. When load is applied, speed drops considerably.)

$$vo = 1920 \times \frac{S}{A} = 2445 \times \frac{S}{D^2} \quad \text{(1)}$$

vo: Theoretical reference speed (mm/s)
A : Cylinder sectional area (cm^2)
S : Composite effective cross-sectional area of circuit (exhaust air side) (mm^2)
D : Cylinder bore size (cm)

When expressed as a graph, the theoretical reference speed is the speed within the range where the cylinder moves at a uniform speed

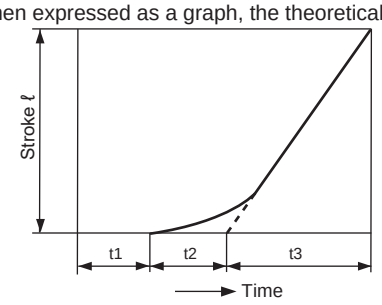

$$vo = \frac{\ell}{t3} \text{ (mm/s)}$$

t1: Time until movement starts
t2: Time of primary delay
t3: Operating time with constant velocity
ℓ : Stroke length

● Note: t1 and t2 differ depending on load. Can be effectively ignored with no load.

● Required flow rate: indicates instantaneous flow rate for operating a cylinder with velocity vo, expressed with the following formula. Values in the table are when P = 0.5 MPa. The required flow rate is a value necessary to select clean air system components.

$$Q = \frac{Avo\,(P + 0.101) \times 60}{0.101 \times 10^4} \quad \text{(2)}$$

Q: Required flow rate (ℓ/min) (ANR)
P: Supply pressure (MPa)

● Required effective sectional area: indicates composite effective cross sectional area for the exhaust circuit required for moving the cylinder at speed *vo*. (Composite effective sectional area of solenoid valve, speed controller, silencer or piping)
Effective cross-sectional area S and sonic conductance C are converted as S ≈ 5.0 x C.

● Proper standard system: indicates the most appropriate combination of solenoid valve, speed controller, silencer and bore size for operating a cylinder with velocity *vo*. The combination in the table is for a pipe length of 1 m.

Depending on the actual unit, they are shown as follows.

Choked flow when $\frac{P_2+0.1}{P_1+0.1} \le b$

$$Q = 600 \times C(P_1+0.1)\sqrt{\frac{293}{273+t}} \quad \text{.....(1)}$$

Subsonic flow when $\frac{P_2+0.1}{P_1+0.1} > b$

$$Q = 600 \times C(P_1+0.1)\sqrt{1-\left(\frac{\frac{P_2+0.1}{P_1+0.1} - b}{1-b}\right)^2}\sqrt{\frac{293}{273+t}} \quad \text{.....(2)}$$

Q : Air flow rate [dm^3/min(ANR)], SI unit dm^3 (cubic decimeter) can also be expressed with ℓ (liter). 1 dm^3 = 1 ℓ
C : Sonic conductance [dm^3/(s/bar)]
b : Critical pressure ratio [-]
P_1: Upstream pressure [MPa]
P_2: Downstream pressure [MPa]
t : Temperature [°C]

When calculating with effective cross-sectional area S, substitute value C obtained with C = S/5 in the above formula.
For subsonic flow, substitute b = 0.5 in formula (2).

4G Series [Device selection guide 1]

Cylinder bore size (mm)	Theoretical reference speed (mm/s)	Required flow rate (ℓ/min) (ANR)	Required effective sectional area (mm^2)	Proper standard system No.			
				Single unit		Manifold	
				Body piping	Base piping	Body piping	Base piping
ø6	(500)	-	(0.1)	A 1	A 2	A 3	A 4
ø10	(500)	-	(0.2)	A 1	A 2	A 3	A 4
ø16	(500)	-	(0.5)	A 1	A 2	A 3	A 4
ø20	250	29	0.5	A 1	A 2	A 3	A 4
	400	46	1.6	B 1	A 2	B 6	A 4
ø25	250	44	0.8	B 1	A 2	A 3	A 4
	400	70	1.9	B 1	B 4	B 6	B 9
ø30	250	64	1.1	B 1	A 2	B 6	A 4
	400	100	2.8	B 1	B 4	B 6	B 9
ø32	250	73	1.3	B 1	A 2	B 6	A 4
	400	120	3.1	B 1	B 4	B 6	B 9
ø40	250	110	2.0	B 1	B 4	B 6	B 9
	400	180	4.9	B 2	B 4	B 7	B 9
ø40	250	110	1.7	B 1	B 4	B 6	B 9
	500	230	3.3	B 2	B 4	B 7	B10
	750	340	5.0	B 3	B 5	B 8	C10
	1000	450	6.6	C 1	C 4	C 7	C10
ø50	250	180	2.6	B 2	B 4	B 7	B10
	500	350	5.2	B 3	C 4	B 8	C10
	750	530	7.7	C 1	C 5	C 7	C11
	1000	710	10.4	C 2	C 5	C 8	C12
ø63	250	280	4.1	B 3	B 5	B 8	B10
	500	560	8.2	C 2	C 4	C 8	C11
	750	840	12.3	C 3	C 5	C 9	C12
	1000	1,100	16.4	-	C 6	-	-
ø75	250	400	5.8	C 1	C 4	C 7	C10
	500	800	11.6	C 3	C 5	C 9	C11
	750	1,200	17.4	-	-	-	-
	1000	1,600	23.2	-	-	-	-
ø80	250	450	6.6	C 1	C 4	C 7	C10
	500	910	13.2	C 3	C 6	-	C12
	750	1,400	19.8	-	-	-	-
	1000	1,800	25.4	-	-	-	-
ø100	250	710	10.3	C 2	C 5	C 8	C11
	500	1,400	20.6	-	-	-	-
	750	2,100	30.9	-	-	-	-
	1,000	2,800	41.2	-	-	-	-

* Refer to pages 844 and 845 for system No.

[Effective cross-sectional area]

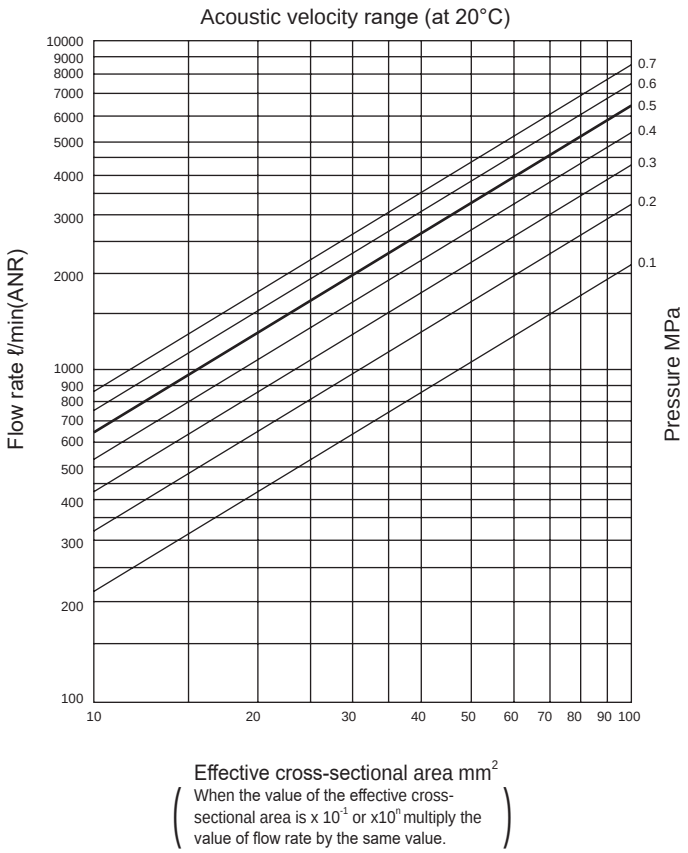

[Clean air system components]

Clean air system components

Part name	Model No.	Port size	Max. flow (ℓ/min atm press conv)
F.R.L. kit	C1000-6-W	Rc1/8	450
	C1000-8-W	Rc1/4	630
	C3000-8-W	Rc1/4	1280
	C3000-10-W	Rc3/8	1750
	C4000-8-W	Rc1/4	1430
	C4000-10-W	Rc3/8	2400
	C4000-15-W	Rc1/2	3000
F.R. unit	W1000-6-W	Rc1/8	830
	W1000-8-W	Rc1/4	1150
	W3000-8-W	Rc1/4	2150
	W3000-10-W	Rc3/8	2430
	W4000-8-W	Rc1/4	2500
	W4000-10-W	Rc3/8	4350
	W4000-15-W	Rc1/2	4750
Air filter (F)	F1000-6-W	Rc1/8	460
	F1000-8-W	Rc1/4	610
	F3000-8-W	Rc1/4	1230
	F3000-10-W	Rc3/8	1500
	F4000-8-W	Rc1/4	1320
	F4000-10-W	Rc3/8	2140
	F4000-15-W	Rc1/2	3000
Regulator (R)	R1000-6-W	Rc1/8	770
	R1000-8-W	Rc1/4	1350
	R3000-8-W	Rc1/4	2000
	R3000-10-W	Rc3/8	2600
	R4000-8-W	Rc1/4	2500
	R4000-10-W	Rc3/8	4400
	R4000-15-W	Rc1/2	5000
Lubricator (L)	L1000-6-W	Rc1/8	550
	L1000-8-W	Rc1/4	700
	L3000-8-W	Rc1/4	1100
	L3000-10-W	Rc3/8	2250
	L4000-8-W	Rc1/4	1000
	L4000-10-W	Rc3/8	1700
	L4000-15-W	Rc1/2	2700

Note) Max. flow rate: For F.R.L., F.R. and R, flow rate at 0.7 MPa primary pressure, 0.5 MPa set pressure, 0.1 MPa pressure drop. For air filter, flow rate at 0.7 MPa primary pressure, 0.02 MPa pressure drop. For lubricator, flow rate at 0.5 MPa primary pressure, flow rate at 0.03 MPa pressure.

MN4G Series [Device selection guide 1]

Cylinder bore size (mm)	Theoretical reference speed (mm/s)	Required flow rate (ℓ/min) (ANR)	Required effective sectional area (mm^2)	Proper standard system No.		
				1. Common exhaust	2. Atmospheric release exhaust	3. Exhaust with silencer
ø6	(500)	-	(0.1)	A 1	A 3	A 5
ø10	(500)	-	(0.2)	A 1	A 3	A 5
ø16	(500)	-	(0.5)	A 1	A 3	A 5
ø20	250	29	0.5	A 1	A 3	A 5
	400	46	1.6	B 1	B 4	B 7
ø25	250	44	0.8	A 2	A 4	A 6
	400	70	1.9	B 1	B 4	B 7
ø30	250	64	1.1	A 2	A 4	A 6
	400	100	2.8	B 1	B 4	B 7
ø32	250	73	1.3	A 2	A 4	A 6
	400	120	3.1	B 2	B 4	B 8
ø40	250	110	2.0	B 1	B 4	B 7
	400	180	4.9	B 3	B 6	B 9
ø40	250	110	1.7	B 1	B 4	B 7
	500	230	3.3	B 2	B 5	B 8
	750	340	5.0	B 3	B 6	B 9
	1000	450	6.6	-	-	-
ø50	250	180	2.6	B 1	B 1	B 7
	500	350	5.2	B 3	B 6	B 9
	750	530	7.7	-	-	-
	1000	710	10.4	-	-	-
ø63	250	280	4.1	B 2	B 5	B 8
	500	560	8.2	-	-	-
	750	840	12.3	-	-	-
	1000	1,100	16.4	-	-	-
ø80	250	450	6.6	-	B 6	-
	500	910	13.2	-	-	-
	750	1,400	19.8	-	-	-
	1000	1,800	25.4	-	-	-

* Refer to page 846 for system No.

[Effective cross-sectional area]

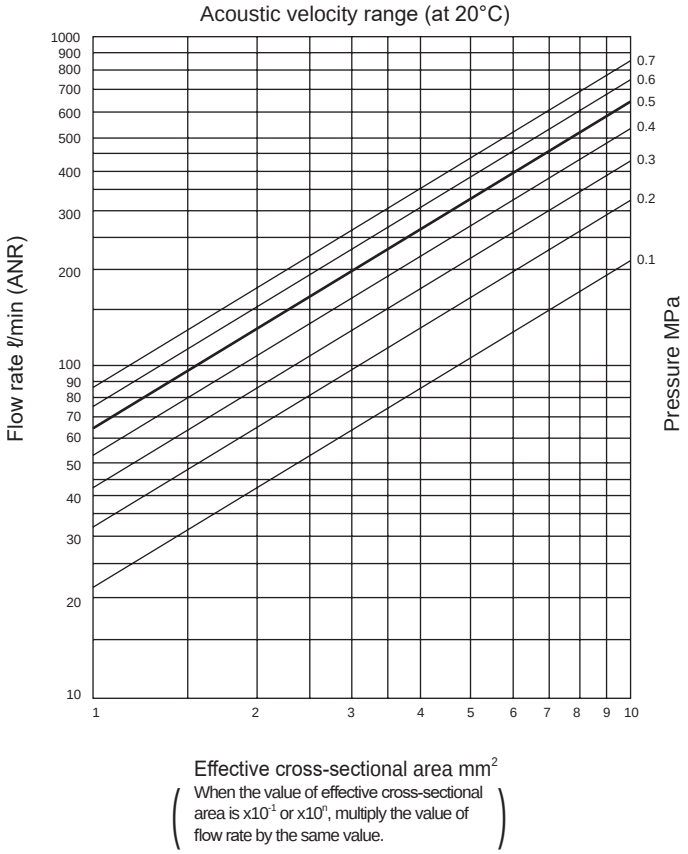

Effective cross-sectional area mm^2

(When the value of effective cross-sectional area is $x10^{-1}$ or $x10^{n}$, multiply the value of flow rate by the same value.)

[Clean air system components]

Clean air system components

Part name	Model No.	Port size	Max. flow (ℓ/min atm press conv)
F.R.L. kit	C1000-6-W	Rc1/8	450
	C1000-8-W	Rc1/4	630
	C3000-8-W	Rc1/4	1280
	C3000-10-W	Rc3/8	1750
	C4000-8-W	Rc1/4	1430
	C4000-10-W	Rc3/8	2400
	C4000-15-W	Rc1/2	3000
F.R. unit	W1000-6-W	Rc1/8	830
	W1000-8-W	Rc1/4	1150
	W3000-8-W	Rc1/4	2150
	W3000-10-W	Rc3/8	2430
	W4000-8-W	Rc1/4	2500
	W4000-10-W	Rc3/8	4350
	W4000-15-W	Rc1/2	4750
Air filter (F)	F1000-6-W	Rc1/8	460
	F1000-8-W	Rc1/4	610
	F3000-8-W	Rc1/4	1230
	F3000-10-W	Rc3/8	1500
	F4000-8-W	Rc1/4	1320
	F4000-10-W	Rc3/8	2140
	F4000-15-W	Rc1/2	3000
Regulator (R)	R1000-6-W	Rc1/8	770
	R1000-8-W	Rc1/4	1350
	R3000-8-W	Rc1/4	2000
	R3000-10-W	Rc3/8	2600
	R4000-8-W	Rc1/4	2500
	R4000-10-W	Rc3/8	4400
	R4000-15-W	Rc1/2	5000
Lubricator (L)	L1000-6-W	Rc1/8	550
	L1000-8-W	Rc1/4	700
	L3000-8-W	Rc1/4	1100
	L3000-10-W	Rc3/8	2250
	L4000-8-W	Rc1/4	1000
	L4000-10-W	Rc3/8	1700
	L4000-15-W	Rc1/2	2700

Note) Max. flow rate: For F.R.L., F.R. and R, flow rate at 0.7 MPa primary pressure, 0.5 MPa set pressure, 0.1 MPa pressure drop. For air filter, flow rate at 0.7 MPa primary pressure, 0.02 MPa pressure drop. For lubricator, flow rate at 0.5 MPa primary pressure, flow rate at 0.03 MPa pressure.

Pneumatic components

Safety Precautions

Be sure to read this section before use.
Refer to Intro Page 59 for general precautions for using valves.

Product-specific cautions: 3, 5-port pilot operated valve 4G*/MN4G* Series

Design/selection

1. Surge suppressor

⚠CAUTION

■ The surge suppressor attached to the solenoid valve is intended to protect the output contacts for the solenoid valve drive. There is no significant protection for the other peripheral devices, and devices could be damaged or could malfunction due to a surge. As well, surges generated by other devices may be absorbed and cause damage such as burning. Note the following points.

● The surge suppressor functions to limit solenoid valve surge voltage, which can reach several hundred volts, to a low voltage level that the output contact can withstand. Depending on the output circuit used, this may be insufficient and could result in damage or malfunction. Check whether the surge suppressor can be used within the surge voltage limit of the solenoid valve in use, the output device's withstand pressure and circuit structure, and by the degree of return delay time. When necessary, provide other surge countermeasures. 4G series solenoid valve with surge suppressor can also suppress inverse voltage surge that occurs when the product is turned OFF to the level shown in the table below.

Specification voltage	Inverse voltage when OFF
3 VDC	Approx. 6.2V
5 VDC	Approx. 13V
12 VDC	Approx. 27 V
24 VDC	Approx. 47V
When option "S" and "E" are selected	Approx. 1V

● If the output unit is an NPN, a surge voltage equaling the voltage shown in the table above plus the power supply voltage may be applied to the output transistor. Make sure to install a contact protection circuit or select option "S" to avoid the risk.

[Output transistor protection circuit: Installation example 1]

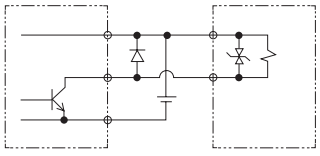

[Output transistor protection circuit: Installation example 2]

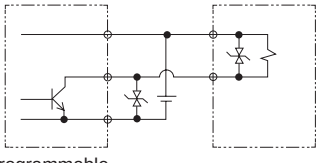

● If another device or solenoid valve is connected in parallel to the solenoid valve, the inverse voltage surge generated when the solenoid valve is OFF would apply to those devices. Even in the case of a solenoid valve with 24 VDC surge suppressor, a surge voltage may reach, negative tens of volts for some models. This inverse voltage may cause damage or malfunction to other components connected in parallel. Avoid parallel connection of devices susceptible to inverse polarity voltages, e.g., LED indicators.

When driving several solenoid valves in parallel, the surge from other solenoid valves may enter the surge suppressor of one solenoid valve, and it may burn depending on the current value. When driving several solenoid valves with surge suppressors in parallel, surge current could concentrate at the surge suppressor with the lowest limit voltage and cause similar burning. Due to the variations in surge suppressor limit voltage that exist even among solenoid valves of the same model No., in the worst case the surge suppressor may burn out. Avoid driving multiple solenoid valves in parallel.

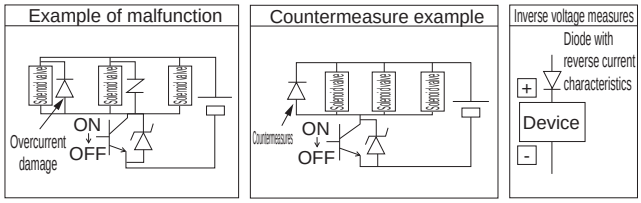

● The surge suppressor incorporated in the solenoid valve will often be short-circuited if it is damaged by an overvoltage or overcurrent from other solenoid valves. Where there is a failed surge suppressor, if a large current flows when the output is ON, in the worst case scenario, the output circuit or solenoid valve could be damaged or ignited. Do not continue energizing in a state of failure. Additionally, to prevent large currents from continuing to flow, connect an overcurrent protection circuit to the power supply and drive circuit, or use a power supply with overcurrent protection.

2. Surgeless

■ Surgeless reduces the solenoid valve surge voltage up to 1 V approx. by the built-in diode. In addition, there is no polarity.

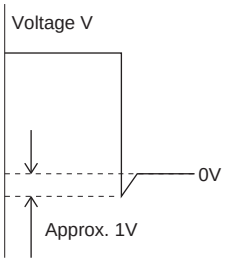

3. Low exoergic/energy saving circuit

■ The low exoergic/energy saving type includes a PWM circuit in the solenoid valve, which is designed to reduce the current value when the coil is held with suction. Power consumption is reduced to 1/4 compared to standard products, enabling use with continuous energization. There is no electrical polarity.

[Specifications for low exoergic/energy saving type]

Item		Current A	Power consumption W
When starting	12 VDC	0.033	0.4
	24 VDC	0.017	0.4
When holding	12 VDC	0.010	0.1
	24 VDC	0.005	0.1

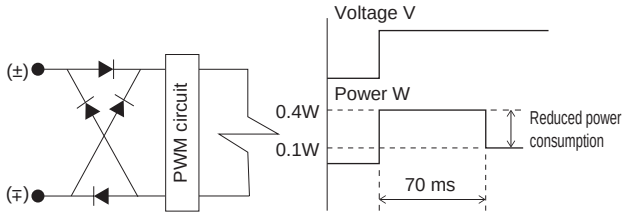

⚠CAUTION

- Do not use this valve in an environment where vibration and impact exceed the specified range. This may result in valve malfunction.
- The energized state cannot be maintained if power is cut off instantaneously for 30 ms or less on the power source driving the solenoid valve. If any disturbance has caused up to 30 ms instantaneous power cut-off of the solenoid valve after being continuously energized, cut the power OFF for 50 ms or more before switching the solenoid valve ON again.
- Do not use this product by gradually raising the voltage. The valve will not operate.

4. AC voltage specifications

⚠CAUTION

- The models with AC voltage specifications have a built-in full-wave rectifier circuit. Depending on the type of SSR used to turn ON/OFF the solenoid valve, recovery failure of the valve may result. Use caution when selecting SSRs. (Consulting the manufacturer of the relay or PLC is recommended.)
- Use the 200VAC specification E-connector with a single-phase 200VAC. Check that adjacent solenoid valves do not continuously energize with 5 or more stations.

5. When using the product in combination with low sliding cylinders

- Malfunctions could occur because of the exhaust pressure. Contact CKD.

6. Exhaust check valve

⚠**CAUTION**: The exhaust check valve is a check valve. If the cylinder rod is manually operated directly without pressurization, the check valve opens and the air flow is shut off, preventing cylinder rod adjustment.

Generally, the double acting cylinder connected at the manifold to single acting cylinders or ABR connection valves may malfunction when adversely affected by the exhaust pressure led in by operation of other cylinders. For the manifold of 4G series, the “exhaust check valve” integrated to prevent this malfunction can be selected, except for all ports closed valves and PAB connection valves. However, with components that are affected by a small amount of leakage or pressure of low sliding cylinders, etc., the functions may not operate properly.

Example of pneumatic pressure system that may malfunction

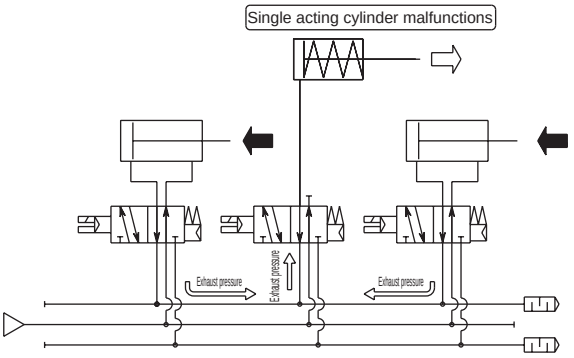

4G series pneumatic pressure system

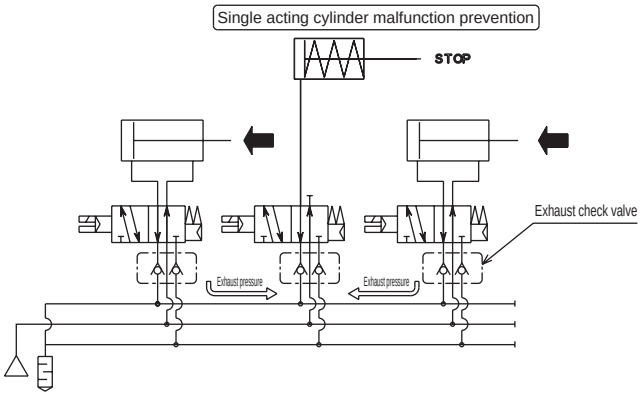

Internal structure

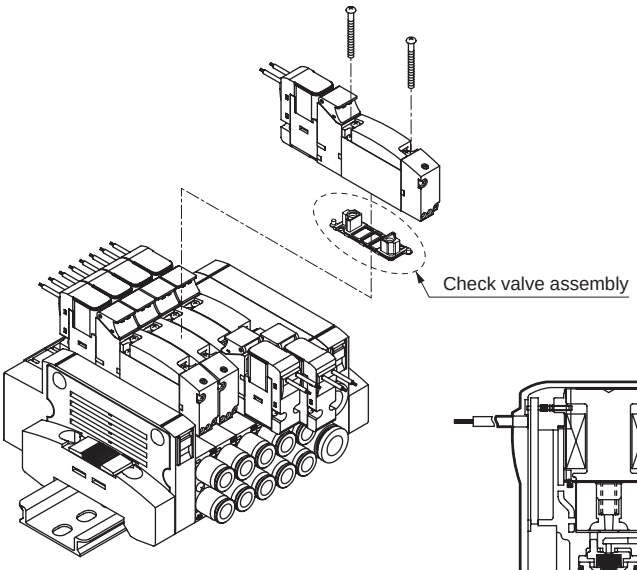

Standard specifications of check valve

Model No.		Flow path switching	Option (H) Selection
4G	MN4G		
3GA*19R	3GA*10R	2-position single NC	With
3GA*119R	3GA*110R	2-position single NO	With
3G A/B*669R	3G A/B*660R	Two 3-port valves integrated NC/NC	With
4G A/B*19R	4G A/B*10R	2-position single	With
4G A/B*29R	4G A/B*20R	2-position double	With
4G A/B*39R	4G A/B*30R	3-position all ports closed	None
4G A/B*49R	4G A/B*40R	3-position ABR connection	With
4G A/B*59R	4G A/B*50R	3-position PAB connection	None

Note: Because 3-position all ports closed and PAB connection are not adversely affected by the exhaust pressure led in from other cylinders at the neutral position, installation of a check valve is not required.

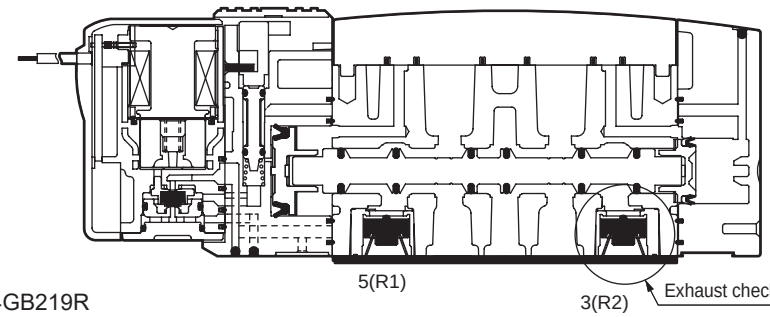

This figure is for 4GB219R

Mounting, installation and adjustment

1. External pilot (K) piping port

⚠CAUTION

■ Metal base 4G A/B Series

● The external pilot (K) has a separate pilot air exhaust. M5 screw ports are used to supply and exhaust the pilot air, so check that the piping connection position is correct. Malfunctions could occur if the piping is incorrect.

Port indication

Applications		Indication (ISO standards)
Pilot air	Air supply port	12/14
	Exhaust port	82/84

Discrete base piping

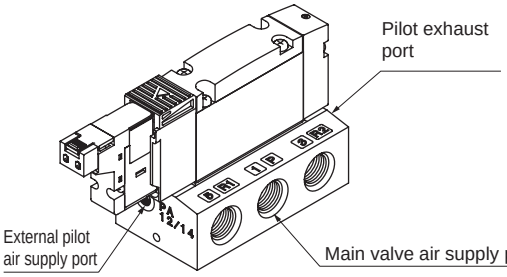

The position of external pilot air supply port is at the left side when the air supply port of the main valve is at the front.

Manifold

M4G1

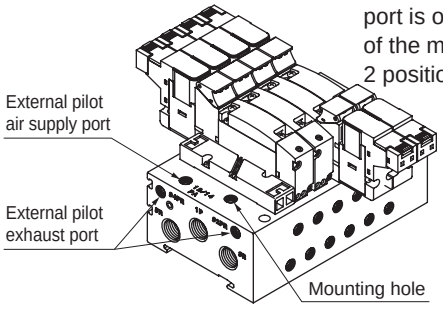

The port position of external pilot air supply port is on the top surface of the manifold. There are 2 positions on each side.

M4G2/3

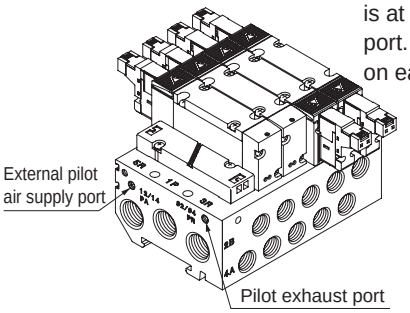

The port position of external pilot air supply port is at the far side from A/B port. There are 2 positions on each end surface.

M4G4

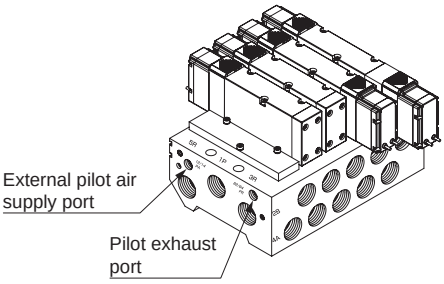

The port position of external pilot air supply port is at the far side from A/B port. There are 2 positions on each end surface.

■ Block manifold MN4G A/B Series

● The external pilot (K) has a separate pilot air supply. ø6 push-in fitting is used to supply the pilot air, so be careful that the piping connection position is correct. Malfunctions could occur if the piping is incorrect.

Port indication

Applications		Indication (ISO standards)
Pilot air	Air supply port	12/14

* Port A/B pressurization and port R pressurization are not possible.

MN4G2

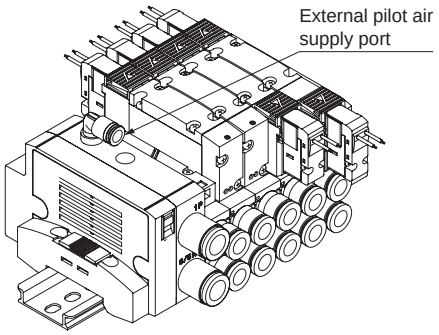

The external pilot air supply port is the ø6 push-in fitting on the top of the supply and exhaust block.

■ Take care with supply pressure for the type with two 3-port valves integrated.

● The valving element of the type with two 3-port valves integrated is operated with the main (P port) supply pressure.

①Check that the main pressure (P port) is no higher than the pilot pressure (PA port).

②Check that the main pressure (P port) does not drop below 0.2 MPa.

Mounting, installation and adjustment

2. How to install discrete body piping (A)

⚠ CAUTION

■ When directly installing the manifold

● The discrete body piping 4GA Series can be installed using the (a) through hole or (b) screw hole. When using the screw holes, be careful of the tightening torque.

Screw hole Tightening torque 0.7 to 1.2 N·m

4GA1 Series
(a) 2 through holes

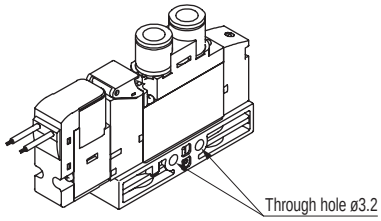

4GA2 Series
(a) Through hole
(b) 4 common screw holes

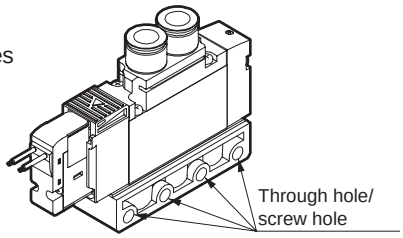

4GA3 Series
(a) Through hole
(b) 2 places each, dedicated for screws

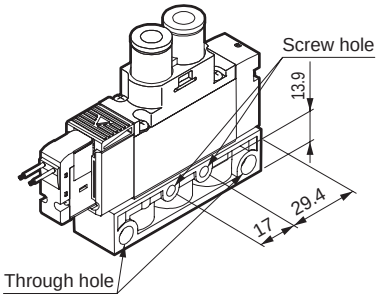

4GA4 Series
(a) 2 through holes

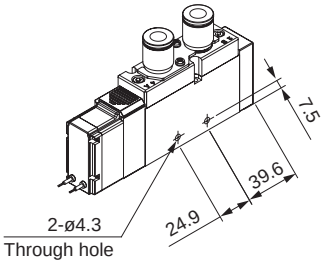

Mounting hole shape

	4GA/D2	4GA/D3	
	(a) (b) Common use	(a) Through hole	(b) Screw hole
Sectional view of mounting hole	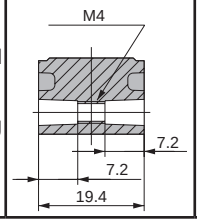	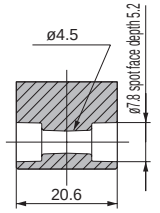	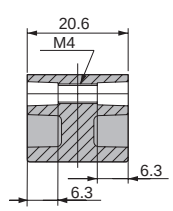

■ When installing the manifold with mounting plate (P)

● Installation method of the mounting plate (P) for discrete body piping differs among the single, double and 3-position. Be careful of the mounting direction and orientation as damage may result from incorrect mounting.

■ How to mount mounting plate (P)

● For grommet lead wire and E-connector (DC voltage)

4GA1

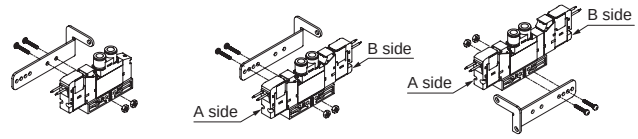

4GA2

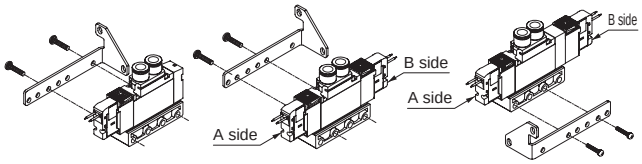

4GA3

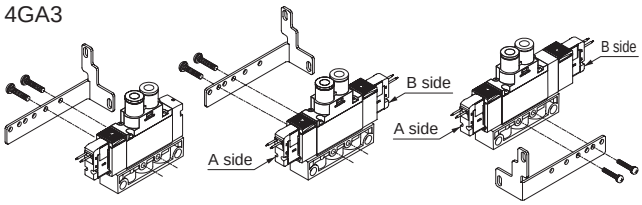

● For DIN terminal box and E-connector (AC voltage)

4GA1

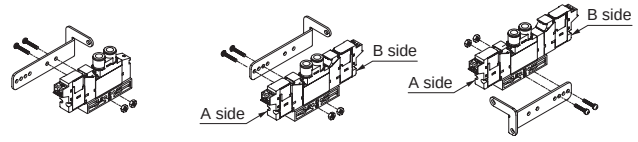

4GA2

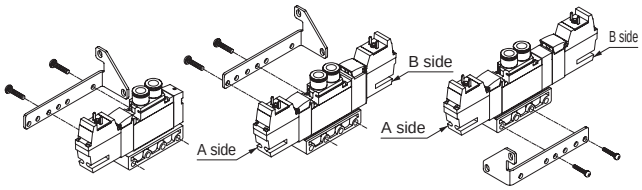

4GA3

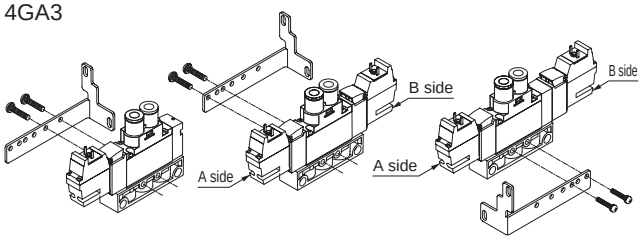

Mounting (P) kit

	Kit model No.	Set parts
4GA1	4G1R-MOUNT-PLATE-KIT	Mounting plate, 2 mounting screws, 2 nuts
4GA2	4G2R-MOUNT-PLATE-KIT	Mounting plate, 2 set screws
4GA3	4G3R-MOUNT-PLATE-KIT	Mounting plate, 2 set screws

Mounting, installation and adjustment

3. How to install manifold (Metal base 4G A/B Series)

⚠CAUTION

■When directly installing the manifold

● For installation of the M4G2/3 Series, there are two methods of tightening the manifold with bolts: after passing it through the upper side of the manifold base and after tightening it with the bolts from the back side. When using a female thread as shown in the table below, check the thread depth, select a mounting bolt with 10 screw-in threads or more, and be careful with the tightening torque. The screw could be damaged if incorrectly installed.

Installation method
M4G2/3 Series

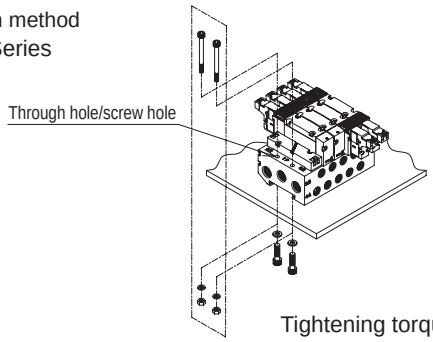

Tightening torque
1 to 1.5 N·m

M4G4 Series

● M4G A/B For installation of Series 4, tighten the manifold with bolts after passing them through the upper side of the manifold base.

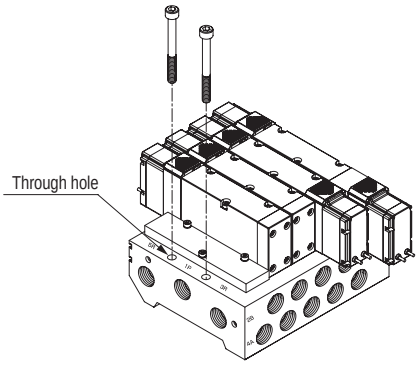

Mounting hole shape (sectional view)

	Standard manifold (internal pilot)		External pilot
	M4GA (Body piping)	M4GB (Base piping)	M4G-K
M4G2	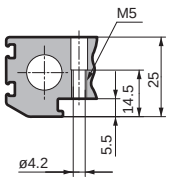	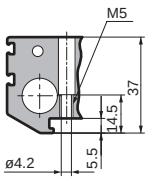	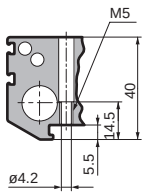
M4G3	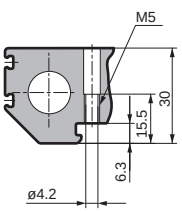	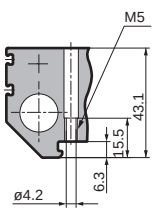	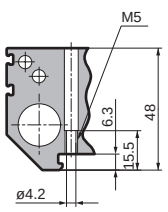

■When installing the manifold with DIN rail

M4G 1, 2, 3

● The manifold of the direct mounting specification can be changed to that of the DIN rail mounting specifications. Note that inappropriate mounting may result in falling off and damage of the manifold. If the manifold weighs more than 1 kg, or when using in an environment with vibration or impact, fix the DIN rail onto the surface at 50 to 100 mm intervals, and confirm that there is no problem with installation before starting operation. Use the individual specifications to calculate the weight. (CAUTION: Only the M4GB1 (page 119) is provided with a dedicated base for the direct mount type or DIN rail mount type. For mounting type, direct mount cannot be changed to DIN rail mounting, but the DIN rail mounting type can be direct mounted.) The upper limit of station No. for DIN rail mounting is 16.

M4G4

● For DIN rail mounting, stands are attached to either end of the supply and exhaust block in order to suppress vibration or impact. The range shown in the figure below allows the stands to be seated on the mounting surface of the DIN rail.(Secure a flat surface with width of 57 + 36mm).

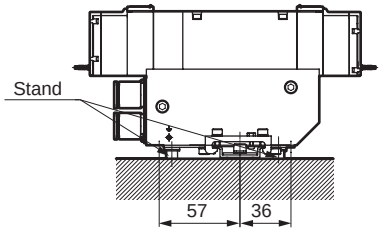

(required range of flat surface)

Fix the DIN rail onto the mounting surface at 75 to 100 mm intervals with M5 bolts using attached square washers, and confirm that there is no problem with installation before starting operation. Install the valve so that the retainer, supply and exhaust blocks will not interfere with the M5 bolts. Steel is used for the DIN rail to ensure strength. When preparing your own rail, use a DIN rail made of steel.

Retainer tightening torque: 2.5 to 3.0 N·m

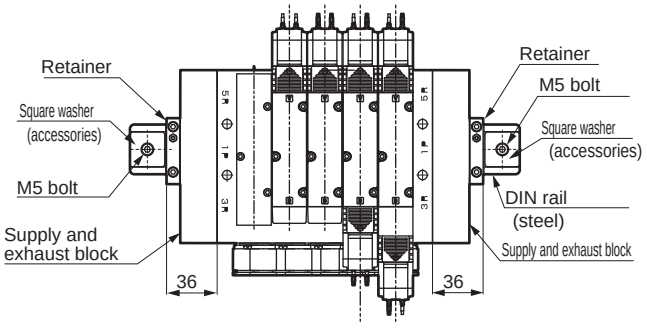

Note that inappropriate mounting may result in falling off and damage of the manifold. The upper limit of station No. for DIN rail mounting is 5.

Mounting, installation and adjustment

■How to mount DIN rail

● Only the M4GB1 Series is provided with a dedicated base for the direct mount or DIN rail mount. For mounting, the direct mount cannot be changed to the DIN rail mounting, but the DIN rail mounting can be direct mounted.

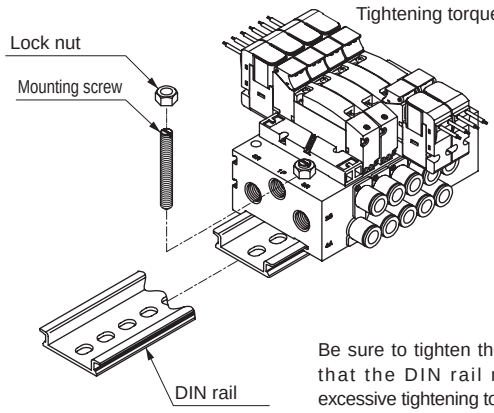

Be sure to tighten the lock nut. Note that the DIN rail may deform if excessive tightening torque is applied.

Mounting hole shape (sectional view)

Internal pilot		External pilot
M4GA/D1 M4GB/E1 (DIN rail mount)	M4GB/E1 (Direct mount)	M4GA1-K M4GB1-K
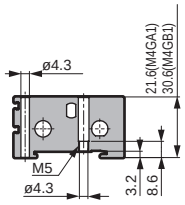	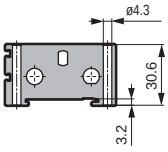	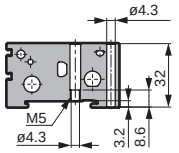

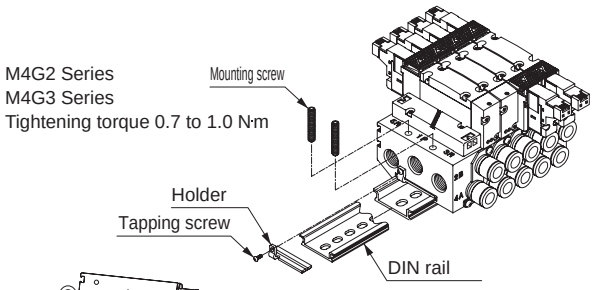

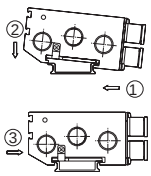

1. Holder mounting
   (Secure with bolts to prevent falling off)
2. Mounting screw temporarily fastened
3. Engage the jaws with the DIN rail in order from ① ②.
4. Press the operation button in the direction of ③.
5. Tighten the mounting screws.

DIN rail kit

	Model No.	Description
M4G1	4GA1R-BAA length - option D	DIN rail, mounting screw 2, lock nut 2
	4GB1R-BAA length - option D	
M4G2	4GA2R-BAA length - option D	DIN rail/holder 2, Tapping screw 2, mounting screw 4
	4GB2R-BAA length - option D	
M4G3	4GA3R-BAA length - option D	
	4GB3R-BAA length - option D	

Specify the length "0" when the DIN rail is not required. Specify the option "K" when using with the manifold base for external pilot.

Set the DIN rail length, referring to the working manifold dimensions and DIN rail length quick reference list (page 308).

4. How to install manifold (Block manifolds)

⚠CAUTION

■Mounting orientation

● The block manifold is mounted on a DIN rail. If the manifold's total weight exceeds 1kg, or when using in an environment with vibration or impact, fix the DIN rails on the mounting surface with a pitch of 50 to 100 mm. Check that there are no problems with installation.Although there is no restriction in mounting direction and orientation, attention should be paid to mounting screw loosening caused by resonance due to vibration that may cause the manifold to fall off during operation.

● How to mount and remove manifold

Removal

Loosen the four DIN rail fixing screws (two each on left/right).

Mounting

1. Engage the jaws with the DIN rail in order from ①②.
2. Press the operation button in the direction of ③.
3. Hold down the blocks so that there is no gap between them and fix the DIN rail with the set screws. (Recommended tightening torque 1.2 to 1.6N•m).

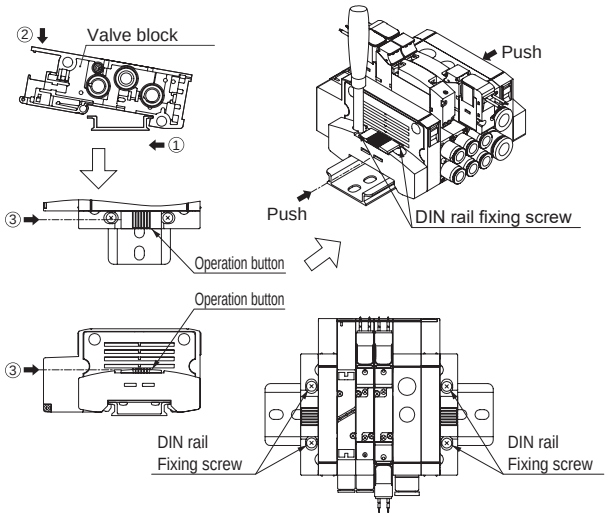

5. Lead wire connection

⚠CAUTION

■Lead wire standards differ depending on the type of electrical connections. Connect wires according to each lead wire to be used.

4G1 to 3

Electrical connection code	Description	Conductor size	Conductor sectional area	Outer ø of insulator	Outer ø of covering
Blank	Grommet lead wire	AWG#26	0.13 or equiv.	1.3	-
E □	E-connector (with lead wire)	AWG#26	0.13 or equiv.	1.3	-
E □ J	EJ-connector	AWG#24	0.2 or equiv.	1.1	3.7

4G4

Electrical connection code	Description	Conductor size	Conductor sectional area	Outer ø of insulator	Outer ø of covering
Blank	Grommet lead wire	AWG#20	0.52 or equiv.	1.8	-
E □	E-connector (with lead wire)	AWG#26	0.13 or equiv.	1.3	-
E □ J	EJ-connector	AWG#24	0.2 or equiv.	1.1	3.7

When installing the manifold and making electrical connections, check that tension by lead wires is not applied to the solenoid valve coil.

Mounting, installation and adjustment

6. How to use E-connector

⚠CAUTION

■ The E-connector has top and side connectors to which sockets can be connected. The socket assembly is connected from the side direction at shipment. Select the connection direction based on the installation environment.

■ How to mount and remove socket

- When mounting the socket, hold the lever and socket with fingers and insert straight into the square window on the connector body. Align the lever jaw with the groove on the connector body and lock it. When mounting from the top, position the socket so that the lever faces the front. When mounting from the side, position the socket so that the lever is in an upward direction.
- When pulling out the socket, press down the lever to release its jaw from the groove, then pull straight out.

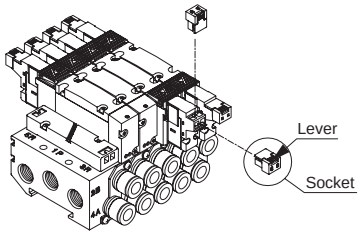

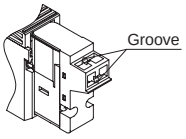

■ How to connect lead wire

- Strip the end of the lead wire by about 3mm. Align the end of core wires, insert them into the contact terminal, and crimp with a crimp tool. When crimping, check that both the sheath and core wires are held, and 0 to 0.5 mm of the core wire end is visible.
- After crimping, position the contact terminal as shown below, and insert into the square window on the socket. The terminal locks when it is inserted to the end. After inserting, pull the terminal lightly to check that it is locked.

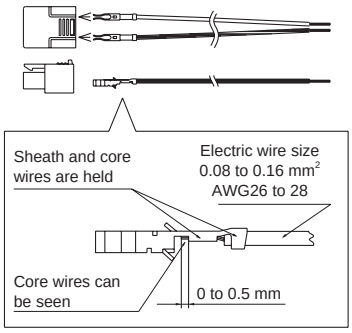

7. How to use E □ J type connector

⚠CAUTION

■ Use the lead wire with limited bending as shown in the figure below.

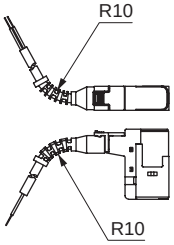

8. How to use A-connector

⚠CAUTION

■ The A-connector is dedicated for reduced wiring manifold mounting, which can be connected from the bottom direction. When mounting or removing the socket, take care similarly to the E-connector.

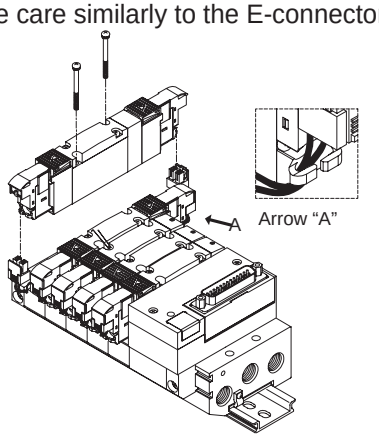

9. DIN terminal box

⚠WARNING

■ As there is a risk of electric shock when assembling or disassembling the terminal box, perform the assembly and/or disassembly after turning OFF the power supply.

⚠CAUTION

■ Disassembly

- Loosen screw ①and pull cover ②in the direction of screw ①to remove the connector from coil assembly ⑫.
- Remove screw ①from cover ②.
- Notch ⑨(next to the GDSN mark) can be found at the bottom of terminal block ③. Insert a compact flathead screwdriver in the gap between housing ② and terminal block ③ and pry to remove terminal block ③ from cover ② (Refer to Fig. 1). Remove the terminal block without applying excessive force. There is a risk of damage.
- Remove cable gland ④and take out washer ⑤and rubber packing ⑥.

Fig. 1 Exploded view

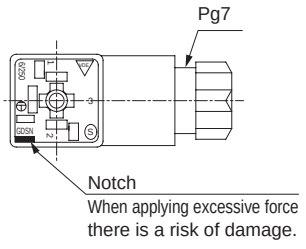

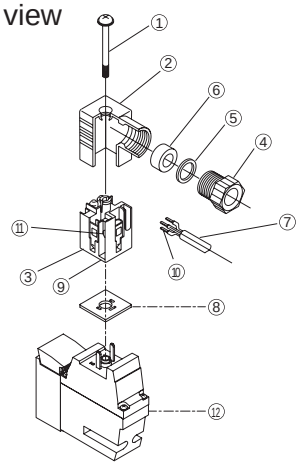

Mounting, installation and adjustment

■Wiring

● Wiring preparation

- The applicable dimensions for cable ⑦ are the VCTF2(3) core (ø3.5 to 7) defined in JIS C3306.
- The length of the lead wire stripping of the cable is 10 mm.
- Both stranded wires and solid wires can be used for wiring.
- When using a stranded wire, avoid connecting a pre-soldered wire.
- When using a crimp sleeve ⑩ at the end of the twisted wire, select H0.5/6 (0.3 to 0.5 mm^2) or H0.75/6 (0.75 mm^2) made by Weidmüller Japan, or an equivalent product. Crimp sleeves are not included.

● Wiring

- Pass cable ⑦ through cable gland ④, washer ⑤, and rubber packing ⑥ in this order, and insert it into cover ②.
- Connect it to terminals 1 and 2. There is no polarity.
- The recommended tightening torque is 0.2 to 0.25 N·m.
- Be sure to lay ground wiring for AC. However, DC type does not require ground wiring.

■Assembly

● Set the wired terminal block ③ on cover ②. (Push in until it clicks.)

* The terminal block can be set in any of the four different directions (Fig.2).

● Insert rubber packing ⑥, and washer ⑤, in this order into the cable through hole in cover ②, and securely tighten cable gland ④.

Remarks: The recommended tightening torque for the cable gland is 1.0 to 1.5 N·m.
Pull the cable to check that it does not become loose.

● Place gasket ⑧ between the bottom part of terminal block ③ and the plug of the coil assembly ⑫, insert the connector, insert screw ② from over the cover ① and tighten it.

Remarks: The recommended tightening torque for screws is 0.4 to 0.45 N·m.

Fig. 2

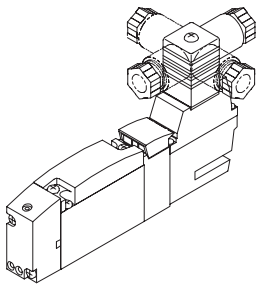

■Terminal box

● When using terminal boxes not manufactured by CKD, make sure they conform to EN175301-803 Type C (former DIN 43650-C).
Select a terminal box with solenoid valve side dimensions (figure below) of 15.7 or less.

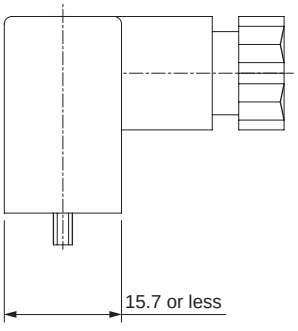

10. Port filter

⚠CAUTION

■The port filter prevents the entry of foreign matter, and prevents problems from occurring in the valve. As this does not improve the quality of the compressed air, read Warnings and Precautions on Intro Pages 61 to 68, then mount, install, and adjust the filter accordingly.
Do not detach or press down the port filter forcibly. The filter could deform, causing problems. If contaminants and foreign matters are found on the filter surface, blow them lightly, or remove them by tweezers, etc.

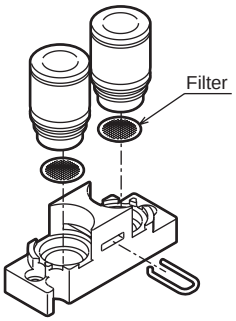

Example of A/B port filter option combination

M4G Series

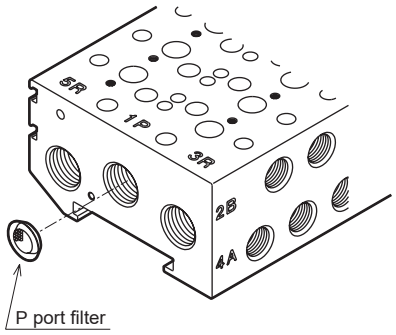

P port filter (standard) example of embedding

MN4G Series

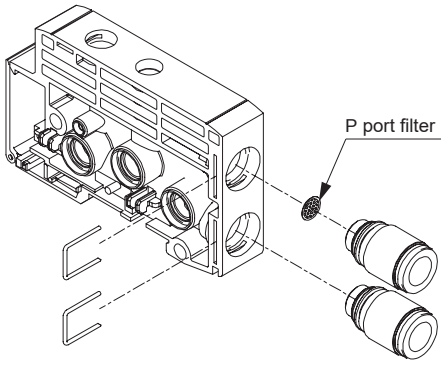

P port filter (standard) example of embedding

Use/maintenance

1. Continuous energizing

⚠CAUTION

- When using in a continuously energized state for long periods, use the low exoergic/energy saving type.
- If a valve other than the low exoergic/energy saving type is used in a continuously energized state for long periods, the valve performance may deteriorate more quickly.
  Furthermore, use caution under the following working conditions likewise.
  - When the energized time exceeds non-energized time in intermittent operation
  - When one energizing session exceeds 30 minutes in intermittent operation

  Give sufficient consideration to heat dissipation when installing the product.
- When using the AC voltage in a continuously energized state, the temperature of the coil's outer surface will be high. It may cause burns. Do not touch it when it is energized.

2. Manual override

⚠WARNING

- The 4G Series is a pilot operated solenoid valve. If air is not supplied to the P port, the main valve will not be switched even if the manual override is operated.
- Manual override protective cover is provided as standard. The protective cover is closed when shipped. Therefore, the manual override device cannot be seen when delivered. Open the protective cover to operate the manual override. Note that the protective cover will not close unless the locking manual override is released.
- Manual override is used for both non-locking and locking. Holding down and turning the button locks the valve. For locking, be sure to press down and turn. If manual override is turned without being pressed down, it could be damaged or air could leak.
- Opening and closing the manual protective cover
  Do not excessively force the manual protective cover when opening and closing it. Excessive external force could cause failures. (Below 5 N)

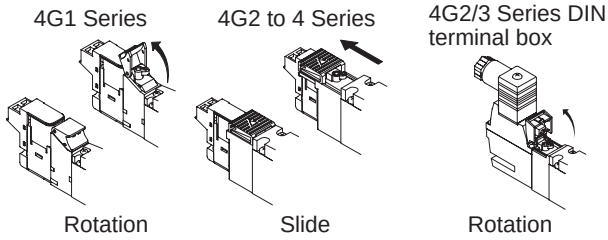

- How to operate manual override
  - When operating the push-button non-locking mechanism, push straight down in the direction of the arrow until it stops. When released, the manual operation is released.
  - Push & locking operation
    Push manual override and turn 90° in the direction of the arrow. The function is not canceled even when the button is released.

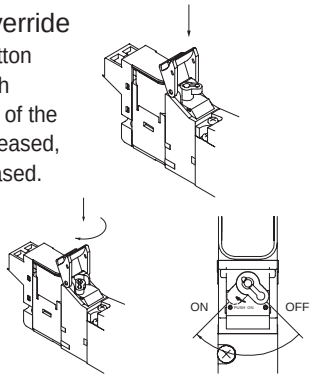

- When conducting manual operations, make sure that there are no people near the operating cylinder.
- How to operate manual override for residual pressure exhaust option

(1) How to open and close the cover
Do not use excessive force when opening and closing the cover.
Excessive external force may cause damage (less than 5 N).

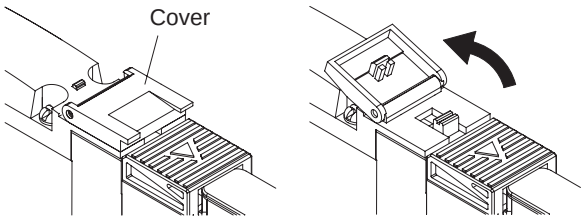

(2) How to operate residual pressure exhaust manual override
For residual pressure exhaust, push the operation shaft in the direction of the arrow.
For the non-locking type (option X), let go of it to release the operation shaft.
For the locking type (option X1), letting go will not release the operation shaft.
(Be careful not to forget to put it back.)

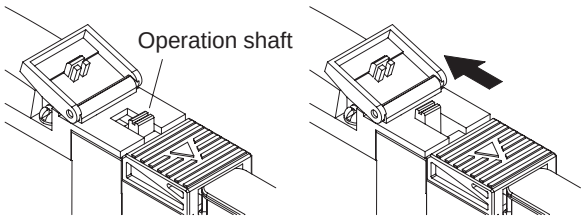

Use/maintenance

3. How to replace cartridge fitting

⚠CAUTION

■Check procedures before changing the push-in fitting size. If installed incorrectly, or if the tightening of the mounting screw is insufficient, air leakage could occur.

■Body piping (A)

4G1, 2, 3

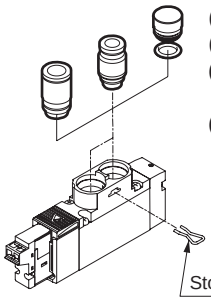

(1) Remove the stopper pin with a screwdriver.
(2) Pull the joint out.
(3) Insert the joint for replacement vertically until it reaches the back.
(4) Insert the stopper pin. Pull on the fitting to confirm that it is properly installed.

	Size	Tightening torque (N·m)
4G1	M1.7	0.18 to 0.22
4G2	M2.5	0.25 to 0.30
4G3	M3	0.6 to 0.7

4G4

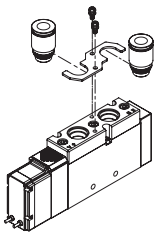

(1) Remove the mounting screw.
(2) Pull out the stopper plate and fitting together.
(3) Align the groove of the replacement fitting with the stopper plate and assemble them temporarily.
(4) Assemble the stopper plate with the fitting, and tighten the mounting screw.

Pull on the fitting to confirm that it is properly installed.

	Size	Tightening torque (N·m)
4G4	M3	0.7

■Base piping (B)

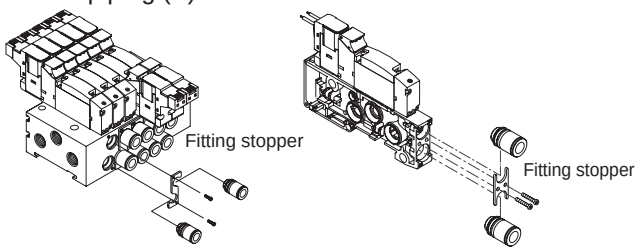

(1) Remove the mounting screw.
(2) Pull out the stopper plate and fitting together.
(3) Align the groove of the replacement fitting with the stopper plate and assemble them temporarily.
(4) Assemble the stopper plate with the fitting, and tighten the mounting screw. Pull on the fitting to confirm that it is properly installed.

Model No. of cartridge push-in fitting

Model	Part name		Model No.
4G1	ø1.8 barbed		4G1R-JOINT-CF
	ø1.8 straight		4G1R-JOINT-C18
	ø4 straight		4G1R-JOINT-C4
	ø6 straight		4G1R-JOINT-C6
	ø8 straight		4G1R-JOINT-C8
	ø1.8 elbow		4G1R-JOINT-CL18,CLL18
	ø4 elbow		4G1R-JOINT-CL4,CLL4
	ø6 elbow		4G1R-JOINT-CL6,CLL6
	ø1/8” straight		4G1R-JOINT-C3N
	ø5/32” straight		4G1R-JOINT-C4N
	ø1/8” elbow	(*1)	4G1R-JOINT-CL3N,CLL3N
	ø5/32” elbow	(*1)	4G1R-JOINT-CL4N,CLL4N
	Plug cartridge		4G1R-JOINT-CPG
4G2	ø4 straight		4G2R-JOINT-C4
	ø6 straight		4G2R-JOINT-C6
	ø8 straight		4G2R-JOINT-C8
	ø10 straight	(*2)	4G2R-JOINT-C10
	ø6 elbow		4G2R-JOINT-CL6,CLL6
	ø8 elbow		4G2R-JOINT-CL8,CLL8
	ø1/4” straight		4G2R-JOINT-C6N
	ø5/16” straight		4G2R-JOINT-C8N
	ø1/4” elbow	(*1)	4G2R-JOINT-CL6N,CLL6N
	ø5/16” elbow	(*1)	4G2R-JOINT-CL8N,CLL8N
	Plug cartridge		4G2R-JOINT-CPG
4G3	ø6 straight		4G3R-JOINT-C6
	ø8 straight		4G3R-JOINT-C8
	ø10 straight		4G3R-JOINT-C10
	ø8 elbow		4G3R-JOINT-CL8,CLL8
	ø10 elbow		4G3R-JOINT-CL10,CLL10
	ø5/16” straight		4G3R-JOINT-C8N
	ø3/8” straight		4G3R-JOINT-C10N
4G4	ø8 straight		4G4-JOINT-C8
	ø10 straight		4G4-JOINT-C10
	ø12 straight		4G4-JOINT-C12

*1: Custom order. *2: Common product with the 4G3 ø10 straight.

Use/maintenance

4. How to change piping connection specification

⚠ CAUTION

4G1, 2, 3

■ When replacing the plate or fitting adapter on the body, changing the body piping and base piping, or changing the push-in fitting and female thread of body piping, be sure to use appropriate tightening torque since air may leak if the mounting screws are loose.

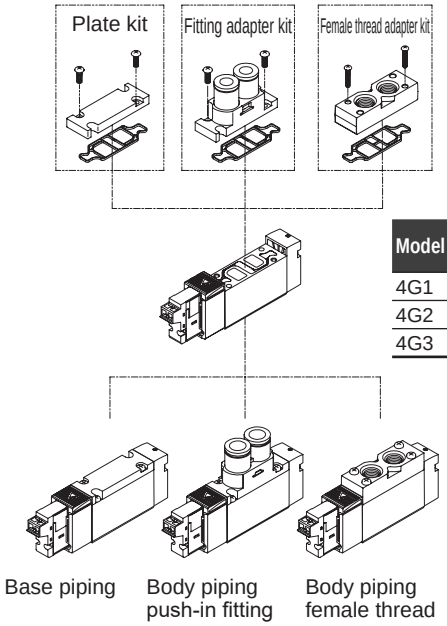

Model	Size	Tightening torque (N·m)
4G1	M1.7	0.18 to 0.22
4G2	M2.5	0.25 to 0.30
4G3	M3	0.6 to 0.7

Plate kit

Model	Kit model No.	Set parts
4GB1	4G1R-PLATE-KIT	Plate, gasket, 2 mounting screws
4GB2	4G2R-PLATE-KIT	Plate, gasket, 2 mounting screws
4GB3	4G3R-PLATE-KIT	Plate, gasket, 2 mounting screws

Fitting adaptor kit

4G1 R-JNT-ADAPTOR-KIT- C4 NC - F

Ⓐ Model No.
Ⓑ Port size
Ⓒ NC/NO
Ⓓ Option

Code	Description	Ⓐ Model No. 3G1	3G2	3G3	4G1	4G2	4G3
Ⓑ Port size							
CF	ø1.8 barbed	●			●		
C18	ø1.8 straight	●			●		
C4	ø4 straight	●	●			●	
C6	ø6 straight	●	●	●		●	●
C8	ø8 straight		●	●		●	●
C10	ø10 straight			●			●
C3N	ø1/8" straight	●			●		
C4N	ø5/32" straight	●			●		
C6N	ø1/4" straight		●			●	
C8N	ø5/16" straight		●	●		●	●
C10N	ø3/8" straight			●			●
Ⓒ NC/NO							
NC	For 3GA □10	●	●	●			
NO	For 3GA □110	●	●	●			
Blank	Other than 3GA □10 or 3GA □ 110				●	●	●
Ⓓ Option							
Blank		●	●	●	●	●	●
F	A/B port filter built in	●	●	●	●	●	●

Note: Fitting adapter (with fittings), gasket and 2 mounting screws are in a set.

Female thread adaptor kit

Model	Kit model No.	Set parts
4G1	4G1R - FML - ADAPTOR - KIT - bore size - option	Female screw adaptor, gasket, 2 mounting screws
4G2	4G2R - FML - ADAPTOR - KIT - bore size - option	Female screw adaptor, gasket, 2 mounting screws
4G3	4G3R - FML - ADAPTOR - KIT - bore size - option	Female screw adaptor, gasket, 2 mounting screws, 2 body mounting screws

Specify the option "F" when using the A/B port filter integrated.

Use/maintenance

4G4

■When replacing the fitting adapter on the body piping or changing the push-in fitting and female thread of body piping, be sure to use appropriate tightening torque since air may leak if the mounting screws are loose.

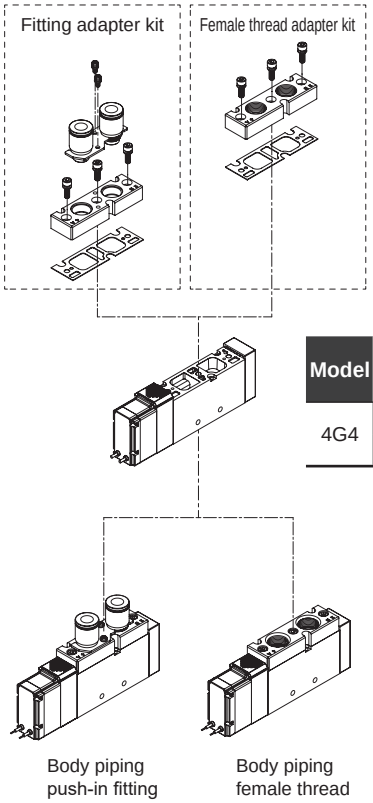

Model	Size	Tightening torque (N·m)
4G4	M3	0.7
	M4	2.6

Fitting adapter kit

Model	Part name	Kit model No.	Set parts
4GA4	ø8 fitting adaptor kit	4GA4 - JNT - ADAPTOR - KIT - C8 - option	Fitting adapter 2 push-in fittings Fitting stopper plate Gasket 2 mounting screws 3 adapter mounting screws
	ø10 fitting adaptor kit	4GA4 - JNT - ADAPTOR - KIT - C10 - option	
	ø12 fitting adaptor kit	4GA4 - JNT - ADAPTOR - KIT - C12 - option	

Specify the option "F" when using the A/B port filter integrated.

Female thread adapter kit

Model	Kit model No.	Set parts
4G4	4GA4 - FML - ADAPTOR - KIT - port size - option	Female thread adapter, gasket, 3 adapter mounting screws

Specify the option "F" when using the A/B port filter integrated.

5. How to replace coil

⚠WARNING

■Grommet lead wire, E type and EJ type connector coil assemblies

Replace the coil by removing the set screws shown below. Loosening other screws could cause operation failures.
When installing, check that the gasket is installed on the coil side and tightening torque is proper.
Improper installation could result in air leakage or operation failures.

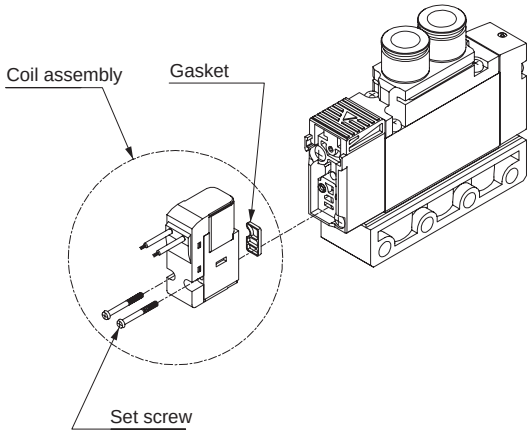

■DIN terminal box coil assembly

Replace the coil assembly by removing the set screws shown below. Loosening other screws could cause operation failures. When installing, check that the gasket is installed on the coil assembly side and tightening torque is proper.
Improper installation could result in air leakage or operation failures.
The coil assembly of grommet lead wire, E-connector specification and DIN terminal box specification cannot be replaced.
Recommended tightening torque 0.15 to 0.19 N·m

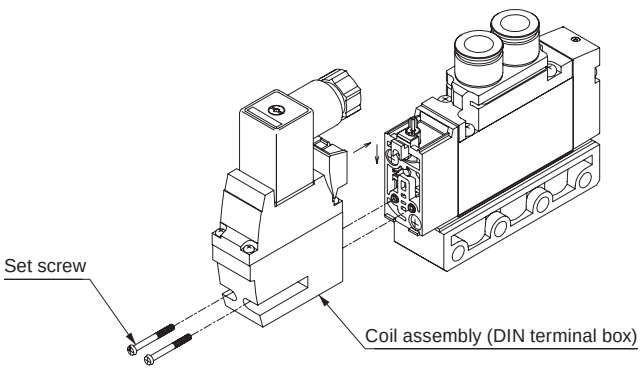

MN3E/MN4E

Pilot operated 3, 4-port valve

PLC-compatible reduced wiring block manifold

Overview

More compact (39.5 mm high) and high-performance MN4E Series, cassette 3, 4-port block manifold, is also available.

Features

Significant reduction of space for installation

Various size options including 10 mm and 7 mm valve widths and 7 mm pitch manifold are available.
Use the compact 7 mm pitch manifold to downsize the system and increase density.

High performance

12 ms high-speed response for balancing ports A and B.

Easy to use

Usability of fittings has been improved to fit the compact valve. Various electrical connections, including 32-point serial transmission, are also available.

Environment and safety-conscious

Environment-friendly wires have been adopted for internal wiring. An additional preventive measure has been implemented to prevent accidental operation of the valve.

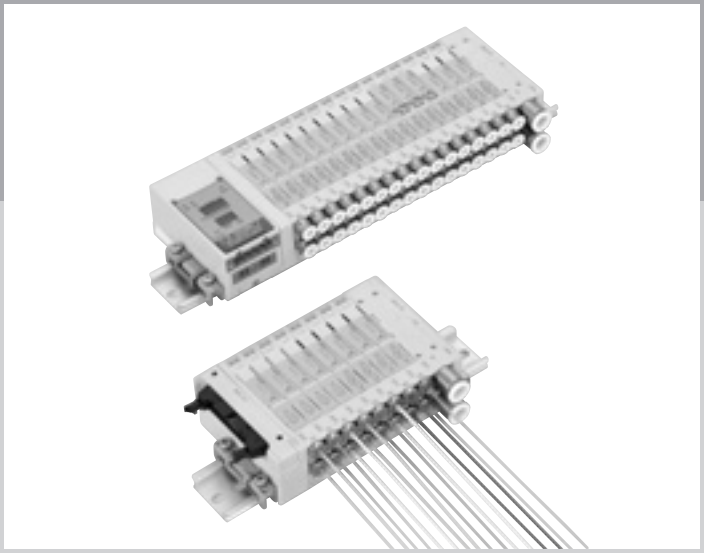

CONTENTS

Product introduction	864
Wiring variations	866
Series variation	868
Reduced wiring block manifold	
● MN3E00/MN4E00	872
● MN3E0/MN4E0	896
● MN3EX0/MN4EX0	920
Block components	922
Technical data	
(1) Notes on wiring	934
(2) How to disassemble/assemble block manifold	950
(3) Individual power supply (AUX) compatible How to operate push-in fitting for fiber tube	952
(4) Wiring structure between wiring block and valve block	953
(5) Regulator block characteristics	955
Block manifold specifications sheet	956
⚠ Safety precautions	959

Introducing pilot operated solenoid valve manifold

Compact/reduced wiring 3, 4-port valve block manifold MN3/4E

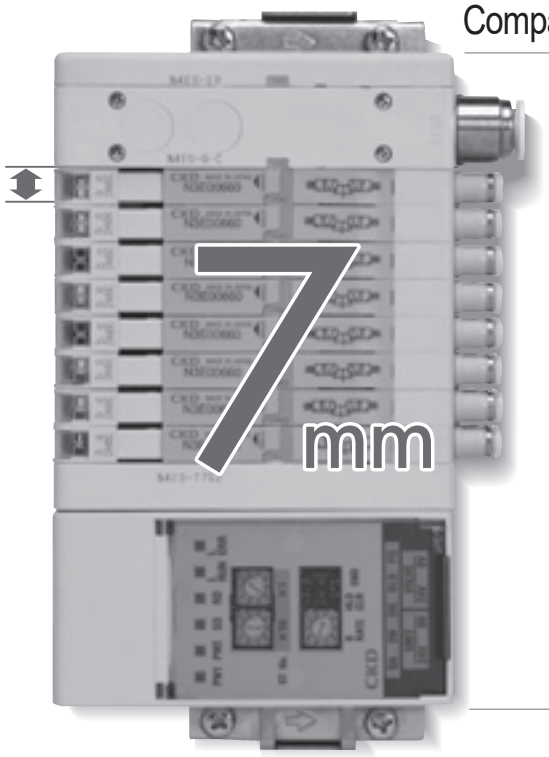

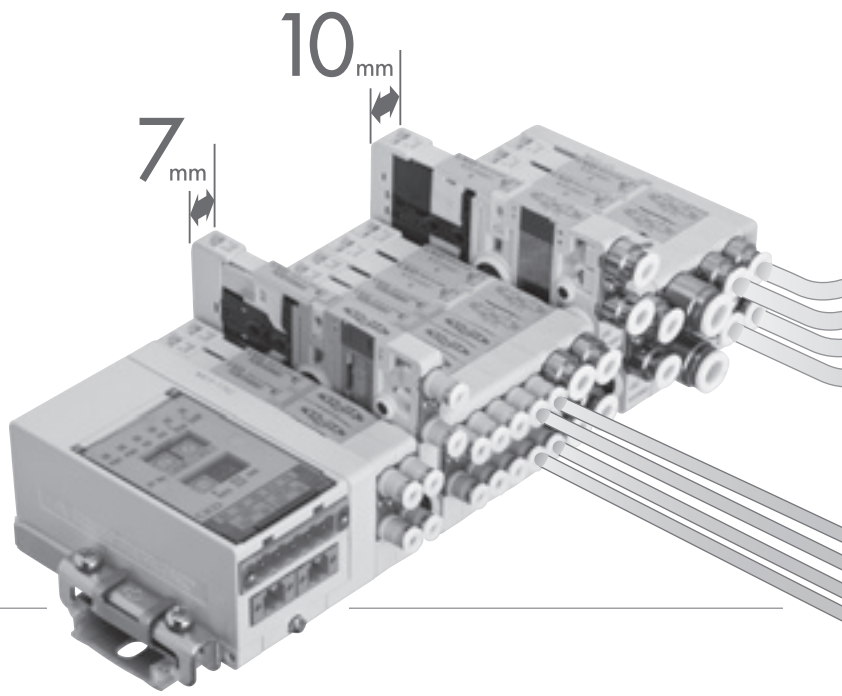

NEW **MN3/4E00 Series**

ECO ϕ3 HIGH SPEC SAFETY

Compact, space saving and low power consumption

Environmental conservation RoHS

Lighter weight and reduced material usage by downsizing/energy saving. We were among the earliest to reduce chemical substances affecting the environment, including lead-free solder and materials compatible with JIG-101A level A.

ø3 push-in fitting is available NEW

Along with reduction of piping volume and ensuring flow rate, it supports ø3 tubes, as well as ø1.8 tubes and contributes to the space saving of tube piping.

Compact/space saving NEW

Introducing MN3/4E00 series of 7 mm valve block width and 7 mm pitch manifold in addition to the MN3/ 4E0 series of 10 mm valve block width type.
Use the compact 7 mm pitch manifold to downsize the system and increase density.

Energy saving NEW

MN3/4E0 series : 0.6W
MN3/4E00 series : 0.4W
With energy saving (Option E), it further reduces power consumption.

* Values in ( ) apply when lamp is included.

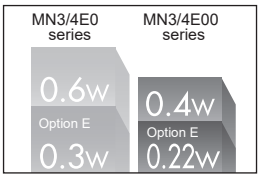

Variety

■ A wide range of electrical connections and options

A wide range of electrical connections such as serial transmission corresponding to various connectors and networks are available.
Easy pluggable regulator blocks are also available.

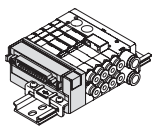
D sub-connector

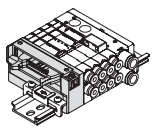
Flat cable connector

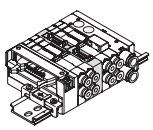
Intermediate wiring block

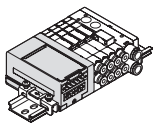
Serial transmission

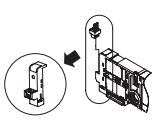
Individual wiring (7 mm,10 mm)


Individual wiring is also available in MN3/4E00 Series!!

# of 7 mm pitch, maintaining high performance and safety

series that is highly integrated/space-saving & high performance.

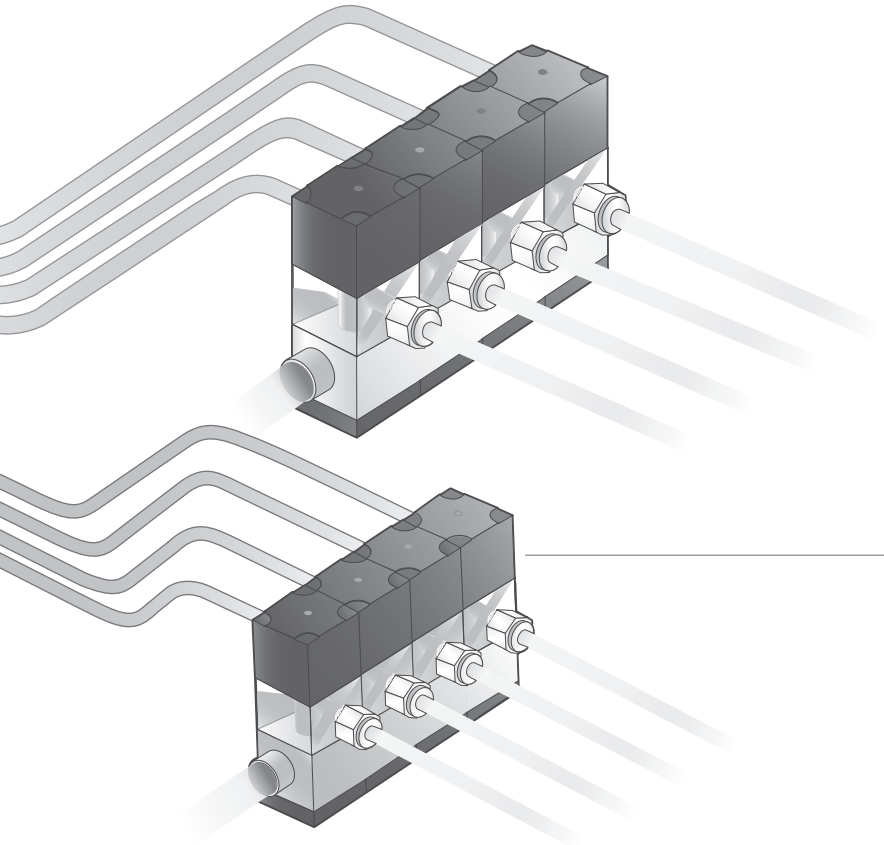

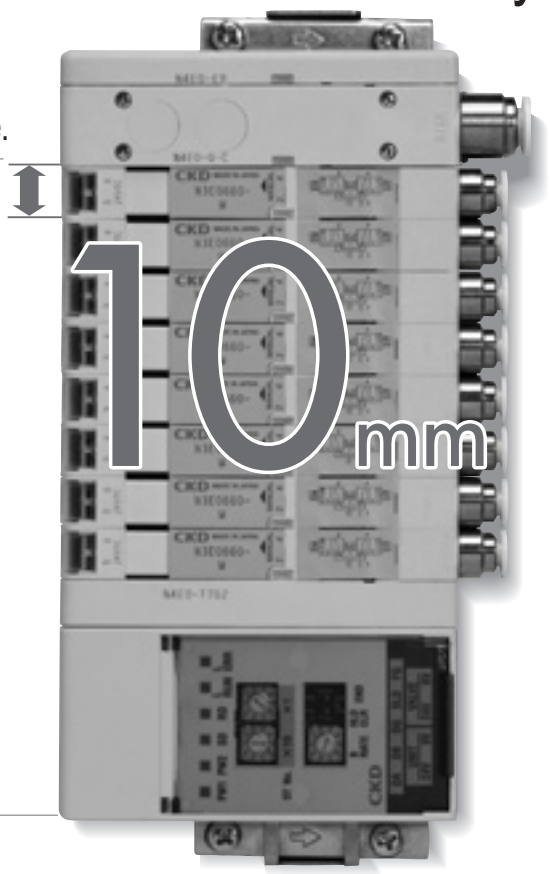

MN3/4E0 Series

ECO HIGH SPEC SAFETY

High performance block manifold with excellent response. Compared to conventional models, space saving of approx. 50%.

HIGH SPEC High performance

■ 12 ms response for balancing ports A and B.
(Our data value with N3D0 two 3-port valves integrated)

■ Cumbersome wiring work is not required

By connector connections, wiring is completed at the same time as assembling.
The regularity of the connector pin array remains undisturbed by electrical connections from both the left and right wiring blocks or by an increase or decrease in the valves.

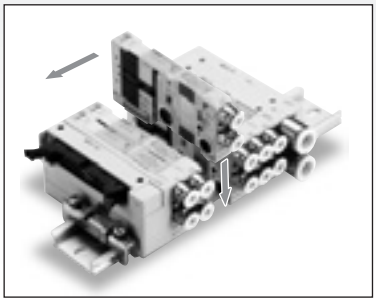

Assembly structure

SAFETY Safety

■ Prevents malfunctions

Exhaust check valve, manual override cover to prevent misoperation and air supply filter to prevent entry of foreign matter are provided as standard.
Pursuing safety to prevent valve malfunction.

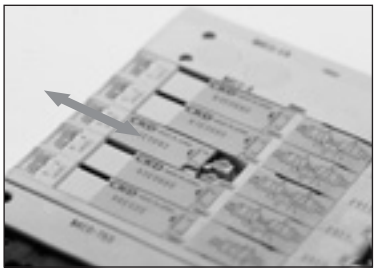

Manual cover

A wide range of wiring options

Wiring has been simplified to improve usability.

MN4E0
4E00

● D-sub-connector (N4E0-T30(N))

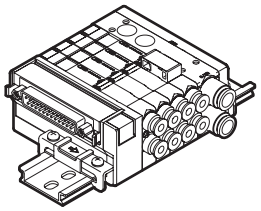

Connector used for T30 wiring, called a D-sub-connector, is used widely for FA and OA devices. 25P in particular is also an RS-232-C Standards designated connector, used for personal computer communication.

● Flat cable connector (N4E0-T5*)

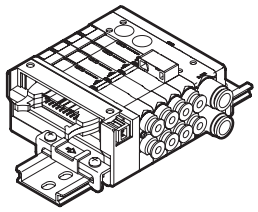

Connectors used for T5* wiring complies with MIL Standards (MIL-C-83503). Wiring work is simplified with the pressure welded flat cable. Pin numbers are assigned differently based on the PLC manufacturer, but the function assignment is the same.

● Intermediate wiring block (N4E0-TM*)

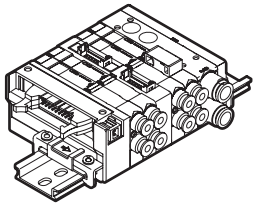

Reduced wiring connection to the center of the manifold is possible. 10P flat cable connector and 6P RITS connectors are available.

● Serial transmission (close contact) (N4E0-T7*)

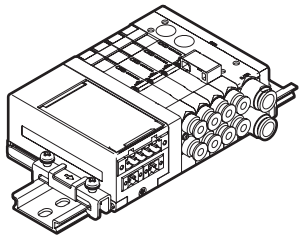

T7D1 T7D2	DeviceNet compatible (16 points, 32 points)
T7G1 T7G2	CC-Link compatible (16 points, 32 points)
T7N1 T7N2	S-LINK V compatible (16 points, 32 points)
T7EC1 T7EC2 T7ECT1 T7ECT2	EtherCAT (16 points, 32 points)

● Serial transmission (N4E0-T6G1)

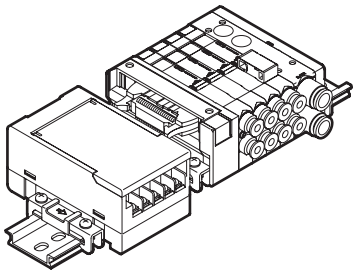

T6G1	CC-Link compatible (16 points)

● Type with individual power supply function (AUX) (MN3E0/MN4E0 Series only)

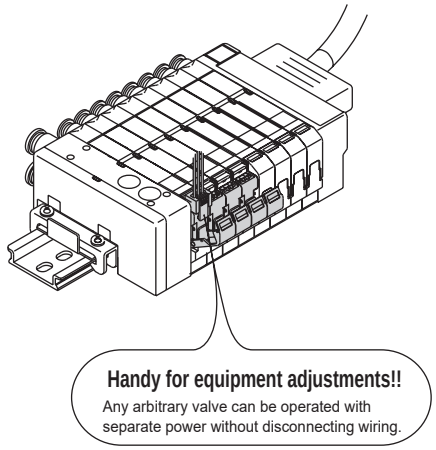

Individual external input is possible even with the reduced wiring manifold. Individual valve operation is possible without stopping the system.
Any arbitrary valve can be operated alone with an external power supply while common wiring is connected.
Compact design that keeps the same height.

● Application examples

Effective for equipment adjustment at startup or to facilitate maintenance.

Electrically operate any arbitrary valve without disconnecting the wiring.
Electrically cut off any arbitrary valve without disconnecting the wiring.

* The valve is cut off from the wiring in the manifold when the external input socket is inserted, so this can also be used as a temporary individual cut-off switch.

● Individual wiring system

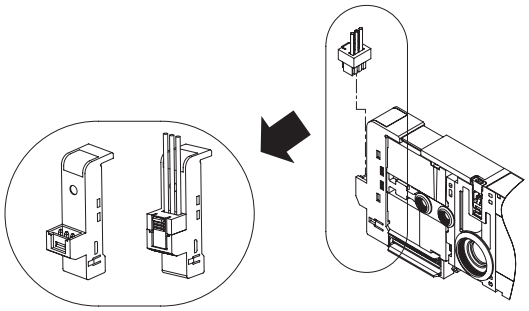

Inputs can be made individually from another system, independent from the common wiring using a reduced wiring system.

● Dummy block

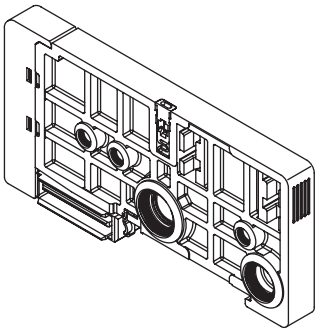

Install a dummy block of appropriate wiring specifications if more valve blocks are to be added in the future: this will enable addition (replacement) of valve blocks without changing the reduced wiring signal assignment.

Series external appearance		Position Number of solenoids (*1) JIS symbol * The JIS symbols on the actual part may differ from these drawings due to the relation of the space and port position.
3-port valve	**MN3E00** 3-port valve  (Valve pitch 7.0mm)	3-port valve ● 2-position NC self-reset (differential pressure spring return) 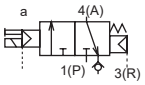 **N3E0010/N3E010** ● 2-position NO self-reset (differential pressure spring return) 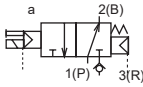 **N3E00110/N3E0110** ● 2-position NC self-hold 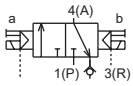 **N3E0020/N3E020** ● 2-position NO self-hold 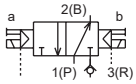 **N3E00210/N3E0210**
	MN3E0 3-port valve  (Valve pitch 10.0 mm)	
Two 3-port valves integrated	**MN3E00** Two 3-port valves integrated  (Valve pitch 7.0mm)	Two 3-port valves integrated ● NC/NC self-reset (Differential pressure return) 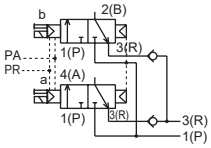 **N3E00660/N3E0660** ● NC/NC self-reset (Differential pressure spring return) 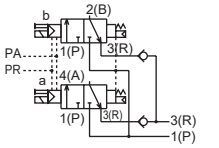 **N3E0066S0/N3E066S0** ● NC/NO self-reset (Differential pressure return) 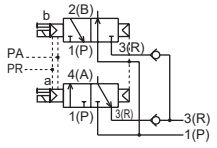 **N3E00670/N3E0670** ● NC/NO self-reset (Differential pressure spring return) 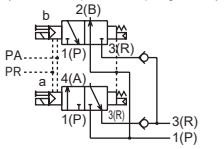 **N3E0067S0/N3E067S0**
	MN3E0 Two 3-port valves integrated  (Valve pitch 10.0 mm)	● NO/NC self-reset (Differential pressure return) 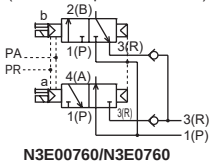 **N3E00760/N3E0760** ● NO/NC self-reset (Differential pressure spring return) 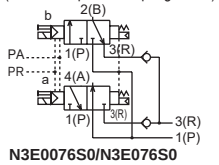 **N3E0076S0/N3E076S0** ● NO/NO self-reset (Differential pressure return) 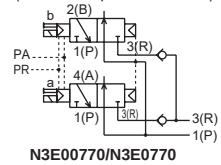 **N3E00770/N3E0770** ● NO/NO self-reset (Differential pressure spring return) 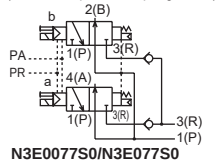 **N3E0077S0/N3E077S0**
4-port valve	**MN4E00** 4-port valve  (Valve pitch 7.0mm)	4-port valve ● 2-position single self-reset (Differential pressure spring return) 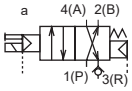 **N4E0010/N4E010** ● 2-position double self-hold 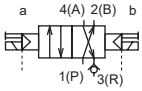 **N4E0020/N4E020**
	MN4E0 4-port valve  (Valve pitch 10.0 mm)	● 3-position all ports closed 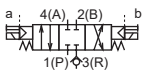 **N4E030** ● 3-position ABR connection 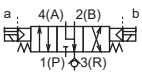 **N4E040** ● 3-position PAB connection 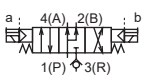 **N4E050**

*1: Refer to “Self-reset” on page 959 for operation of the self-reset.
*2: Effective cross-sectional area S and sonic conductance C are converted as S ≈ 5.0 x C.

Flow characteristics C [dm³/(s·bar)] (*2)	Voltage (V)	Switching position: 3-port valve: Single NC	Single NO	Double NC	Double NO	Two 3-port valves integrated: NC on A side, NC on B side	NC on A side, NO on B side	NO on A side, NC on B side	NO on A side, NO on B side	4-port valve: 2-position single	2-position double	3-position all ports closed	3-position A/B/R connection	3-position P/A/B connection	Mix	Port size of A/B port: Push-in fitting: ø1.8 (C18)	ø3 (C3)	ø4 (C4)	ø6 (C6)	Female thread: M3	M5	Fiber tube fitting (CF)	ø 1/8" (C3N)	ø 5/32" (C4N)	Electrical connections: Individual wiring (D□)	D sub-connector (T30□ T30N□)	Flat cable (T5□)	Intermediate wiring block (TM□)	Wiring block mix (TX)	Serial transmission (T6G1 T7□)	Page
	0.3	●	●	●	●										●	●	●	●		●			●	●	●	●	●	●	●	●	872
	0.54	●	●	●	●										●	●		●	●		●	●	●	●	●	●	●	●	●	●	896
	0.3					●	●	●	●						●	●	●	●	●	●				●	●	●	●	●	●	●	●	872
	0.50					●	●	●	●						●	●		●	●		●	●	●	●	●	●	●	●	●	●	●	896
	0.3									●	●				●	●	●	●		●				●	●	●	●	●	●	●	●	872
	0.54									●	●	●	●	●	●	●		●	●		●	●	●	●	●	●	●	●	●	●	●	896
	0.50 (N4E030 N4E050)																														

(*3) 24 DC 12 DC

*3: Serial transmission is 24 VDC only

Wiring method

T30(N) T30(N)R D sub-connector

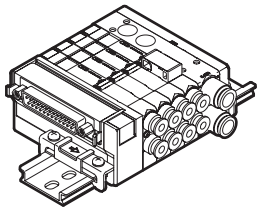

T50 T50R 20-pin flat cable connector (with power supply terminal)

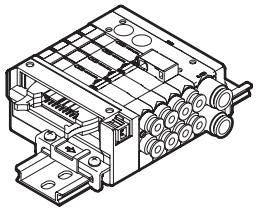

T51 T51R 20-pin flat cable connector (without power supply terminal)

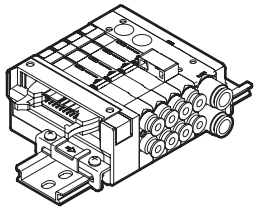

T52 T52R 10-pin flat cable connector (without power supply terminal)

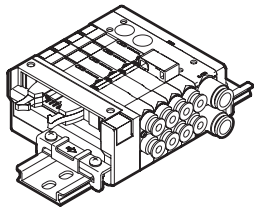

T53 T53R 26-pin flat cable connector (without power supply terminal)

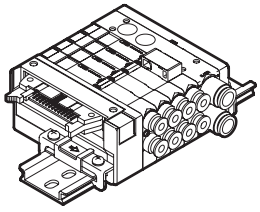

TM1A Intermediate wiring block (RITS6PX2)

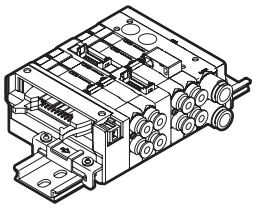

TM1C Intermediate wiring block (RITS6PX1)

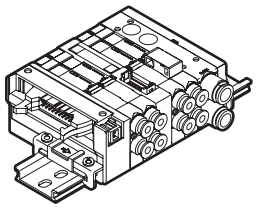

TM52 Intermediate wiring block (10-pin flat cable connector)

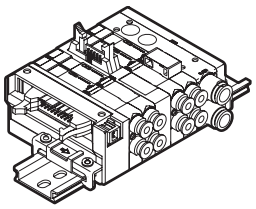

T6G1 Serial transmission

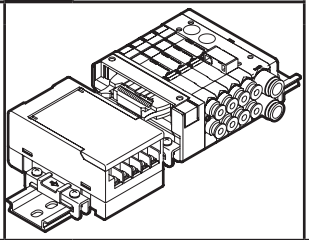

T7* Serial transmission (close contact)

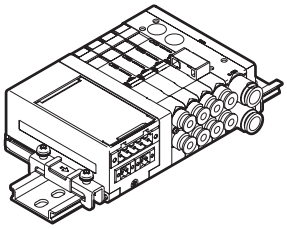

Manual operating device

Blank ● Common for locking/non-locking (standard)

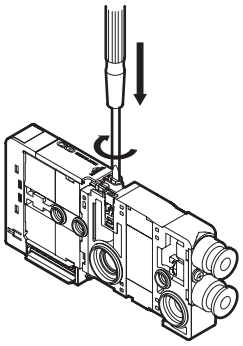

M For non-locking

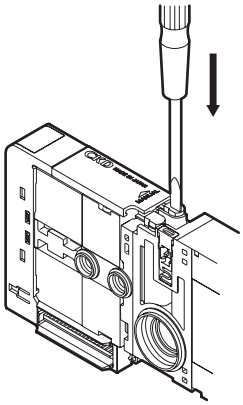

Other options

E Low exoergic/ energy saving circuit

A Ozone-proof product

F A/B port filter integrated

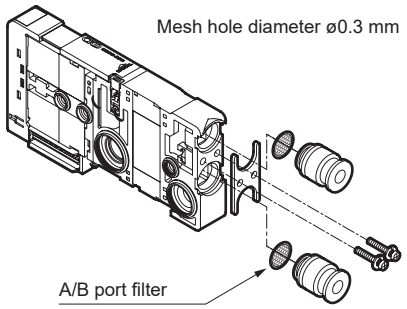

U Built-in individual power supply function (AUX)

* MN3E0/MN4E0 only

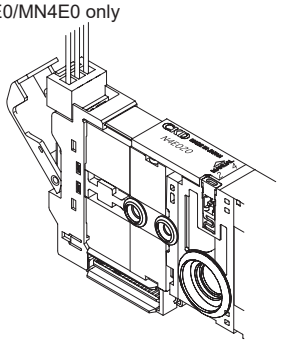

D* Individual wiring D-connector

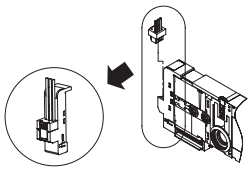

D* Individual wiring D-connector without socket/with socket and terminal

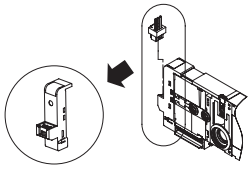

Dummy block

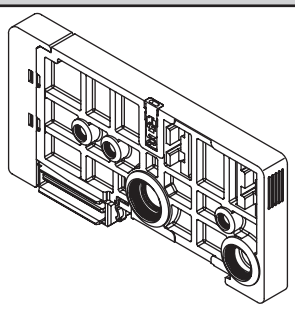

Electric connection circuit diagram

With surge suppressor and indicator (supplied as standard)

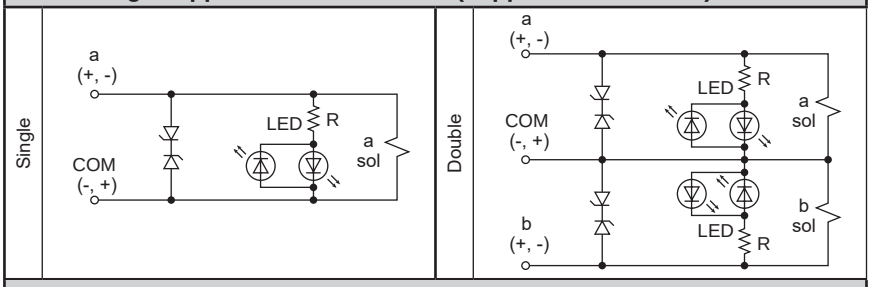

With surge suppressor and indicator (option E, U)

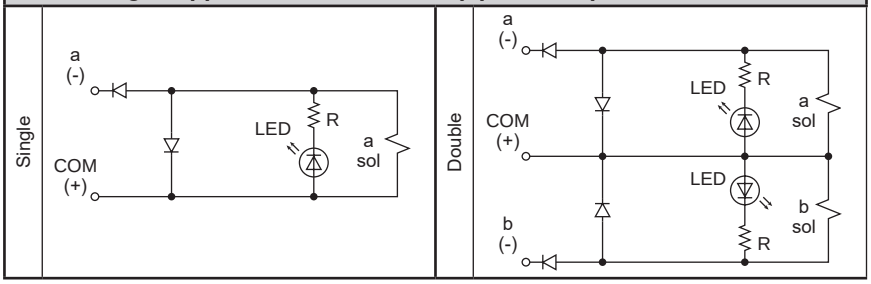

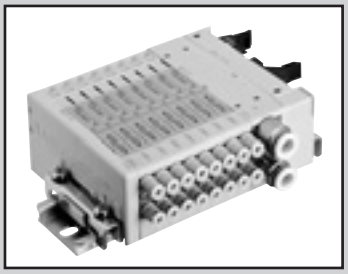

Reduced wiring block
manifold pilot operated 3, 4-port valve

MN3E00/MN4E00 Series

Common specifications

Item	Description
Manifold method	Block manifold
Manifold	Common supply/exhaust Exhaust check valve built-in (*1)
Working fluid	Compressed air
Valve and operation	Pilot operated soft spool valve
Max. working pressure MPa	0.7 (≈100 psi, 7 bar)
Min. working pressure MPa	0.2 (≈29 psi, 2 bar)
Proof pressure MPa	1.05 (≈150 psi, 10.5 bar)
Ambient temperature °C	5 (41°F) to 55 (131°F)
Fluid temperature °C	5 (41°F) to 55 (131°F)
Lubrication	Not required (*2)
Degree of protection	Dust-proof
Vibration resistance m/s^2	50 or less
Shock resistance m/s^2	300 or less
Atmosphere	Cannot be used in corrosive gas environments
Manual override	Locking/non-locking common type or non-locking

*1: Check valve block back pressure from adjacent pneumatic devices, etc. However, the structure does not permit continuous pressure holding, so do not use for purposes other than blocking back pressure.

Electrical specifications

Item		Description
Rated voltage V		12, 24 DC
Voltage fluctuation range		±10% (When using serial transmission +10%, -5%)
Holding current A	24 VDC	0.017 (0.009) (*3)
	12 VDC	0.033 (0.018) (*3)
Power consumption W	24 VDC	0.4 (0.22) (*3)
	12 VDC	
Thermal class		B
Indicator		LED

*2: As this product has non-lubrication specifications, adding oil may cause leakage of the grease initially sealed in, which may prevent the product from operating at its maximum performance.
*3: Values shown in ( ) are for low exoergic/energy saving circuit. As well, when using the valve block with low exoergic/energy-saving circuit, energizing is limited to the plus common.

Individual specifications

Item \ Port		3-port valve	4-port valve	Two 3-port valves integrated *1
Port size	A/B Port	ø1.8, ø3, ø4 Push-in fitting, M3		
	P/R port	ø6, ø8 Push-in fitting		
	External pilot port	ø6 Push-in fitting		-

*1: The type with two 3-port valves integrated uses main pressure to operate the valving element, and therefore cannot be used with external pilot. Check for sufficient supply air flow that the supply pressure does not drop below the min. working pressure due to the operation of the connected load (air operated valve), etc.

Max. number of stations energized by manifold

● T3□/T5□/TM□/T6G1

Item		MN3E00/MN4E00								
		T30 (N)	T50	T51	T52	T53	TM1A	TM1C	TM52	T6G1
Max. station No.	Standard wiring	24 stations	16 stations	18 stations	8 stations	24 stations	10 stations	5 stations	8 stations	16 stations
	Double wiring	12 stations	8 stations	9 stations	4 stations	12 stations	5 stations	2 stations	4 stations	8 stations
Max. number of solenoids		24 points	16 points	18 points	8 points	24 points	10 points	5 points	8 points	16 points

● T7□

Item		MN3E00/MN4E00							
		T7D1	T7D2	T7G1	T7G2	T7N1	T7N2	T7EC□1	T7EC□2
Max. station No.	Standard wiring	16 stations	32 stations	16 stations	32 stations	16 stations	32 stations	16 stations	32 stations
	Double wiring	8 stations	16 stations	8 stations	16 stations	8 stations	16 stations	8 stations	16 stations
Max. number of solenoids		16 points	32 points	16 points	32 points	16 points	32 points	16 points	32 points

Performance/characteristics by model

Item \ Port			3-port valve	4-port valve	Two 3-port valves integrated
Response time (*1) ms	2 position	Single	20 or less	20 or less	20 or less
		Double	20 or less	20 or less	-

*1: The response time is the value at 0.5 MPa supply pressure, with no lubrication.

Flow characteristics

		P→A/B		A/B→R	
		C[dm³/(s·bar)]	b	C[dm³/(s·bar)]	b
3-port valve	2-position	0.30	0.20	0.32	0.24
4-port valve	2-position	0.30	0.20	0.32	0.24
Two 3-port valves integrated	2-position	0.30	0.20	0.32	0.24

*1: Effective cross-sectional area S and sonic conductance C are converted as S ≈ 5.0 × C. *2: Value for ø4 push-in fitting

Device unit specifications

The communication setting file can be downloaded from the CKD website (https://www.ckd.co.jp/en/).

Item		T6G1 *1	T7D1 T7D2	T7G1 *1 T7G2	T7N1 T7N2	T7EC □ 1 T7EC □ 2
Power supply voltage	Unit side	24 VDC ±10%	24 VDC ±10%			
	Valve side	24 VDC + 10% -5%	24 VDC + 10% -5%			
	Unit side	-	11 to 25 VDC	-		
Current consumption	Unit side	100 mA or less (When all points output ON)	T7D1: 60 mA or less T7D2: 85 mA or less (When all points output ON)	T7G1: 65 mA or less T7G2: 90 mA or less (When all points output ON)	T7N1: 40 mA or less T7N2: 50 mA or less (When all points output ON)	120 mA or less (When all points output ON)
	Valve side	15 mA or less (when all points OFF)	15 mA or less (when all points OFF)			
	Unit side	-	50 mA or less	-		
No. of I/O points		16 points	T7D1: 16 points T7D2: 32 points	T7G1: 16 points T7G2: 32 points	T7N1: 16 points T7N2: 32 points	T7EC □ 1: 16 points T7EC □ 2: 32 points
Occupied number		1 station	T7D1: 2 bytes T7D2: 4 bytes	T7G1: 1 station T7G2: 1 station	T7N1: output 16 points T7N2: output 32 points	T7EC □ 1: 1 address T7EC □ 2: 1 address

*1: CC-Link is Ver. 1.10.

Weight

Wiring block (g)		D-sub-connector T30(N)	Flat cable connector T5*	Intermediate wiring block		Serial transmission		
				TM1*	TM52	T6G1	T7*	T7EC*
		67	59	32	34	205	128	145
Supply and exhaust block (g)		Q/QZ	QK	QKZ	QX		QKX	
	Fitting Lateral	64	69	79	56		61	
	Fitting Upward	90	94	98	62		66	
Valve block (g)		2-position single	2-position double	Two 3-port valves integrated				
	Fitting Lateral	31.5	35.0	35.0				
	Fitting Upward	37.5	41.0	41.0				
Dummy block (g)		MPS/MPD						
		20						
Regulator block (g)	(*1)	-						
		124						
End block (g)		ER/EL						
		40						
DIN rail (g)		-						
		0.19 g/mm						

*1: The values may differ slightly based on the regulator block specifications.

How to order manifold D sub/flat cable connector

*Refer to page 878 for serial transmission.

● Discrete valve block

N 3 E00 1 0 - C3 —— M D2 W EF —— 3

● Block manifolds

MN 4 E00 1 0 - C3 - R - M T53 D2 E - 5 - 3

- DIN rail Mounting method
- A Valve type
- B Solenoid position
- C Port size
- D Adjustment function
- E Manual override
- F Wiring method
- G Terminal/connector pin array
- H Option
- I Station No.
- J Voltage

Individual wiring

*** "Manifold specifications sheet" (Page 957).**

Type	
Block manifold	Valve Discrete block
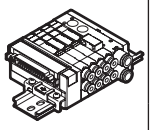	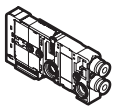

Code	Description		Block manifold	Valve Discrete block
A Valve type				
3	3-port valve or two 3-port valves integrated		●	●
4	4-port valve or 3, 4-port valve mix		●	●
B Solenoid position (*10)				
1	3-port valve: Single NC self-reset	(Differential pressure spring return)	●	●
11	3-port valve: Single NO self-reset	(Differential pressure spring return)	●	●
2	3-port valve: Double NC self-hold		●	●
21	3-port valve: Double NO self-hold		●	●
66	Two 3-port valves integrated (*1): A side valve: NC self-reset	(Differential pressure return)	●	●
66S	Two 3-port valves integrated (*1): B side valve: NC self-reset	(Differential pressure spring return)	●	●
67	Two 3-port valves integrated (*1): A side valve: NC self-reset	(Differential pressure return)	●	●
67S	Two 3-port valves integrated (*1): B side valve: NO self-reset	(Differential pressure spring return)	●	●
76	Two 3-port valves integrated (*1): A side valve: NO self-reset	(Differential pressure return)	●	●
76S	Two 3-port valves integrated (*1): B side valve: NC self-reset	(Differential pressure spring return)	●	●
77	Two 3-port valves integrated (*1): A side valve: NO self-reset	(Differential pressure return)	●	●
77S	Two 3-port valves integrated (*1): B side valve: NO self-reset	(Differential pressure spring return)	●	●
1	4-port valve: 2-position single self-reset	(Differential pressure spring return)	●	●
2	4-port valve: 2-position double self-hold		●	●
8	Mix manifold		●	
C Port size				
C18	ø1.8 push-in fitting lateral (compatible tube UP-9402-**)		●	●
CL18	ø1.8 push-in fitting upward (compatible tube UP-9402-**)		●	●
C3	ø3 Push-in fitting Side		●	●
CL3	ø3 push-in fitting upward		●	●
C4	ø4 push-in fitting lateral		●	●
CL4	ø4 push-in fitting upward		●	●
M3	M3 female thread (with rotation-stop)		●	●
CX	Mix push-in fitting (*12)		●	
C3N	ø1/8" push-in fitting lateral		●	●
CL3N	ø1/8" push-in fitting upward		●	●
C4N	ø5/32" push-in fitting lateral		●	●
CL4N	ø5/32" push-in fitting upward		●	●
CXN	Mix push-in fitting (*12)		●	
D Adjustment function				
Blank	Without regulator block		●	
R	Regulator block equipped manifold	(*2)(*3)	●	
E Manual override				
Blank	Non-locking/locking common (with manual cover)		●	●
M	Manual override for non-locking (with manual cover)		●	●
F Wiring method				
Refer to the following page for the wiring method.			●	
G Terminal/connector pin array				
Blank	Standard wiring		●	●
W	Double wiring (*4))(*5)		●	●
H Option				
Blank	No		●	●
E	Low exoergic/energy circuit type (*6)(*7)		●	●
F	Port A/B filter integrated (*8)		●	●
I Station No.				(*11)
1	1 stations		●	
to	to			
24	24 stations (*9)			
J Voltage				
3	24 VDC		●	●
4	12 VDC		●	●

· For model No. of the cable with D sub-connector, refer to page 935.

Precautions for model No. selection

*1:The two 3-port valves integrated type cannot be used with the external pilot. Consult with CKD for other working conditions.

*2:The two 3-port valves integrated type resets the main valve with the main pressure, so if there is a difference between the pilot pressure and main pressure, the response time may be delayed.

*3:Check that the main pressure supplied to the valve block with two 3-port valves integrated is not higher than the pilot pressure, and that the main pressure does not drop below 0.2 MPa.

***4: Refer to the connector pin layout (example) on pages 934 to 941 for the double wiring specifications.** When ordering individual valve blocks, the double wiring designation is limited to the 4-position single solenoid for the 2-port valve and to the 3-position single solenoid for the 2-port valve.

*5: Double wiring is not available for discrete individual wiring valve block.

*6: Energizing is limited to the plus common.

*7: Individual wiring is not available for low exoergic/energy circuit type.

*8: In the supply and exhaust block's port P, a filter (for preventing entry of foreign matter) is incorporated.

***9:Differs depending on the specifications. Refer to page 872.**

***10:For specifications of the self-reset, refer to the precautions on page 959.** To include a dummy block, select mix manifold.

*11:A dummy block is counted in the station No.

*12:Inch fittings cannot be mixed with metric fittings and M3 female threads.

(Wiring method list)

Code	Description		Type: Block manifold	Type: Valve Discrete block
			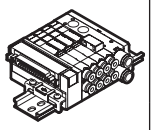	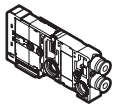
Ⓕ Wiring method				
T30(N)	25-pin D-sub-connector Left-sided spec.		●	
T30(N)R	25-pin D-sub-connector Right-sided spec.		●	
T50	20-pin flat cable connector Left-sided spec. (with power supply terminal) (*13)		●	
T50R	20-pin flat cable connector Right-sided spec. (with power supply terminal) (*13)		●	
T51	20-pin flat cable connector Left-sided spec.		●	
T51R	20-pin flat cable connector Right-sided spec.		●	
T52	10-pin flat cable connector Left-sided spec.		●	
T52R	10-pin flat cable connector Right-sided spec.		●	
T53	26-pin flat cable connector Left-sided spec.		●	
T53R	26-pin flat cable connector Right-sided spec.		●	
TM1A	Intermediate wiring block RITS connector 6P×2 (*14)		●	
TM1C	Intermediate wiring block RITS connector 6P (*14)		●	
TM52	Intermediate wiring block 10-pin flat cable connector		●	
TX	Wiring block mix(*15) (*16) (*17)		●	
Blank	Valve block for reduced wiring			●
D2	Individual wiring *	D-connector 300 mm	●	●
D20		D-connector 500 mm	●	●
D21		D-connector 1000 mm	●	●
D22		DType connector 2000mm	●	●
D23		D-connector 3000 mm	●	●
D2N		D-connector without socket	●	●
D3		D-connector with socket/terminal	●	●

*13: T50 and T50R with power supply terminal can be combined only with T50R and T50 respectively.
*14:RITS connector 6P (1473562-6) Tyco Electronics Japan G.K.
*15: Request 2 pcs in the manifold specifications sheet. Contact CKD for 3 pcs. or more.
*16: Individual wiring is not available for the TX wiring method.
*17: For the TX wiring method, the max. station No. is 24.
* Individual wiring: Individual wiring specification is available with valve blocks designated for it.

Ozone specifications

Ozone-proof specifications are available as standard.

Clean-room specifications

(Catalog No. CB-033SA)

● Anti-dust generation structure for use in cleanrooms

** - Voltage - **P70**

CE marking specifications

** - Voltage - **ST**

・Standard voltage of DC24V or less is CE marking-compatible even if the model No. is not indicated with "ST".

Manifold components explanation and parts list

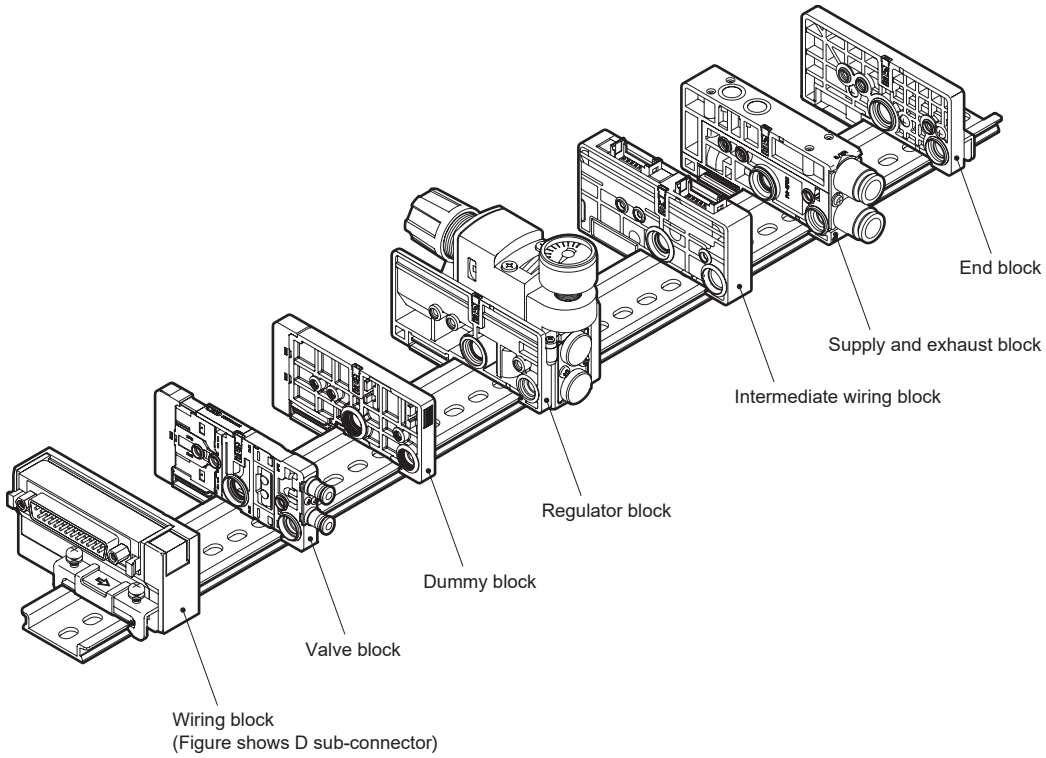

Example of main component model No. (Refer to pages 922 to 932 for details)

Part name	Model No. (example)	Part name	Model No. (example)
Wiring block	N4E0-T30	Intermediate wiring block	N4E0-TM1A
Valve block	N4E0020-C3-3	Supply and exhaust block	N4E0-Q-8
Dummy block	N4E0-MPD	End block	N4E0-ER
Regulator block	N4E0-RA-RL		

Related parts list

Part name	Model No. (example)	Part name	Model No. (example)
Cartridge push-in fitting and related parts	N4E00-JOINT-C18	Cartridge push-in fitting and related parts	N4E00-JOINT-CPG
	N4E00-JOINT-C3		
	N4E00-JOINT-C4		
	N4E00-JOINT-CL18		
	N4E00-JOINT-CL3		
	N4E00-JOINT-CL4		
	N4E00-JOINT-C3N		
	N4E00-JOINT-C4N		
	N4E00-JOINT-CL3N		
	N4E00-JOINT-CL4N		

MEMO

How to order manifold Serial transmission

* Refer to page 874 for details on D sub-connector/flat cable connector.

● Discrete valve block

N 3 E00 1 0- C3 —— M D2 W EF —— 3

● Block manifolds

MN 4 E00 1 0- C3 - R - M T6G1 D2 E - 5 - 3

- DIN rail Mounting method
- A Valve type
- B Solenoid position
- C Port size
- D Adjustment function
- E Manual override
- F Wiring method (serial transmission)
- G Terminal/connector pin array
- H Option
- I Station No.
- J Voltage
- Individual wiringType

***Be sure to fill in the "Manifold specifications sheet" (page 957).**

Code	Description	Type: Block manifold	Type: Valve Discrete block
		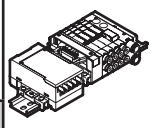	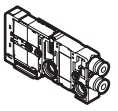
A Valve type			
3	3-port valve or two 3-port valves integrated	●	●
4	4-port valve or 3, 4-port valve mix	●	●
B Solenoid position (*10)			
1	3-port valve: Single NC self-reset (Differential pressure spring return)	●	●
11	3-port valve: Single NO self-reset (Differential pressure spring return)	●	●
2	3-port valve: Double NC self-hold	●	●
21	3-port valve: Double NO self-hold	●	●
66	Two 3-port valves integrated (*1): A side valve: NC self-reset (Differential pressure return)	●	●
66S	Two 3-port valves integrated (*1): B side valve: NC self-reset (Differential pressure spring return)	●	●
67	Two 3-port valves integrated (*1): A side valve: NC self-reset (Differential pressure return)	●	●
67S	Two 3-port valves integrated (*1): B side valve: NO self-reset (Differential pressure spring return)	●	●
76	Two 3-port valves integrated (*1): A side valve: NO self-reset (Differential pressure return)	●	●
76S	Two 3-port valves integrated (*1): B side valve: NC self-reset (Differential pressure spring return)	●	●
77	Two 3-port valves integrated (*1): A side valve: NO self-reset (Differential pressure return)	●	●
77S	Two 3-port valves integrated (*1): B side valve: NO self-reset (Differential pressure spring return)	●	●
1	4-port valve: 2-position single self-reset (Differential pressure spring return)	●	●
2	4-port valve: 2-position double self-hold	●	●
8	Mix manifold	●	
C Port size			
C18	ø1.8 push-in fitting lateral (compatible tube UP-9402-**)	●	●
CL18	ø1.8 push-in fitting upward (compatible tube UP-9402-**)	●	●
C3	ø3 push-in fitting lateral	●	●
CL3	ø3 push-in fitting upward	●	●
C4	ø4 push-in fitting lateral	●	●
CL4	ø4 push-in fitting upward	●	●
M3	M3 female thread (with rotation-stop)	●	●
CX	Mix push-in fitting (*12)	●	
C3N	ø1/8" push-in fitting lateral	●	●
CL3N	ø1/8" push-in fitting upward	●	●
C4N	ø5/32" push-in fitting lateral	●	●
CL4N	ø5/32" push-in fitting upward	●	●
CXN	Mix push-in fitting (*12)	●	
D Adjustment function			
Blank	Without regulator block	●	
R	Regulator block equipped manifold (*2) (*3)	●	
E Manual override			
Blank	Non-locking/locking common (with manual cover)	●	●
M	Manual override for non-locking (with manual cover)	●	●
F Wiring method			
Refer to the following page for the wiring method.		●	
G Terminal/connector pin array			
Blank	Standard wiring	●	●
W	Double wiring (*4) (*5)	●	●
H Option			
Blank	No	●	●
E	Low exoergic/energy circuit type (*6)(*7)	●	●
F	Port A/B filter integrated (*8)	●	●
I Station No.			(*11)
1	1 stations	●	
to	to		
32	32 stations (*9)		
J Voltage			
3	24 VDC	●	●

Precautions for model No. selection

*1:The two 3-port valves integrated type cannot be used with the external pilot. Consult with CKD for other working conditions.

*2:The two 3-port valves integrated type resets the main valve with the main pressure, so if there is a difference between the pilot pressure and main pressure, the response time may be delayed.

*3:Check that the main pressure supplied to the valve block with two 3-port valves integrated is not higher than the pilot pressure, and that the main pressure does not drop below 0.2 MPa.

***4:Check the connector pin array (example) given on pages 944 to 948 for the double wiring specifications.**
When ordering individual valve blocks, the double wiring designation is limited to the 4-position single solenoid for the 2-port valve and to the 3-position single solenoid for the 2-port valve.

*5: Double wiring is not available for discrete individual wiring valve block.

*6: Energizing is limited to the plus common.

*7: Individual wiring is not available for low exoergic/energy circuit type.

*8: A filter (for preventing entry of foreign matter) is incorporated in the supply and exhaust block's port P.

***9:Differs depending on the specifications. Refer to page 872.**

***10:For specifications of the self-reset, refer to the precautions on page 959.**
To include a dummy block, select mix manifold.

*11: A dummy block is counted in the station No.

*12: Inch fittings cannot be mixed with metric fittings and M3 female threads.

(Wiring method list)

Code		Description	Type: Block manifold	Type: Valve Discrete block
		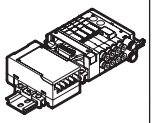		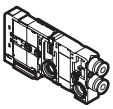
Ⓕ Wiring method				
T6G1		CC-Link 16 points	●	
T7D1		Close contact type DeviceNet 16 points	●	
T7D2		Close contact type DeviceNet 32 points	●	
T7G1		Close contact type CC-Link 16 points	●	
T7G2		Close contact type CC-Link 32 points	●	
T7N1		Close contact type S-LINK V 16 points	●	
T7N2		Close contact type S-LINK V 32 points	●	
T7EC1		Close contact EtherCAT 16 points (port side leadout)	●	
T7EC2		Close contact EtherCAT 32 points (port side leadout)	●	
T7ECT1		Close contact EtherCAT 16 points (wiring side leadout)	●	
T7ECT2		Close contact EtherCAT 32 points (wiring side leadout)	●	
Blank		Valve block for reduced wiring		●
D2	Individual wiring	D-connector 300 mm	●	●
D20		D-connector 500 mm	●	●
D21		D-connector 1000 mm	●	●
D22		DType connector 2000mm	●	●
D23		D-connector 3000 mm	●	●
D2N		D-connector without socket	●	●
D3		D-connector with socket/terminal	●	●

Ozone specifications

Ozone-proof specifications are available as standard.

Clean-room specifications

(Catalog No. CB-033SA)

● Anti-dust generation structure for use in cleanrooms

** - Voltage - **P70**

CE marking specifications

** - Voltage - **ST**

- Standard voltage of 24 VDC or less is CE marking-compatible even if the model No. is not indicated with "ST".
- T7N1 and T7N2 are not CE marking.

Manifold components explanation and parts list

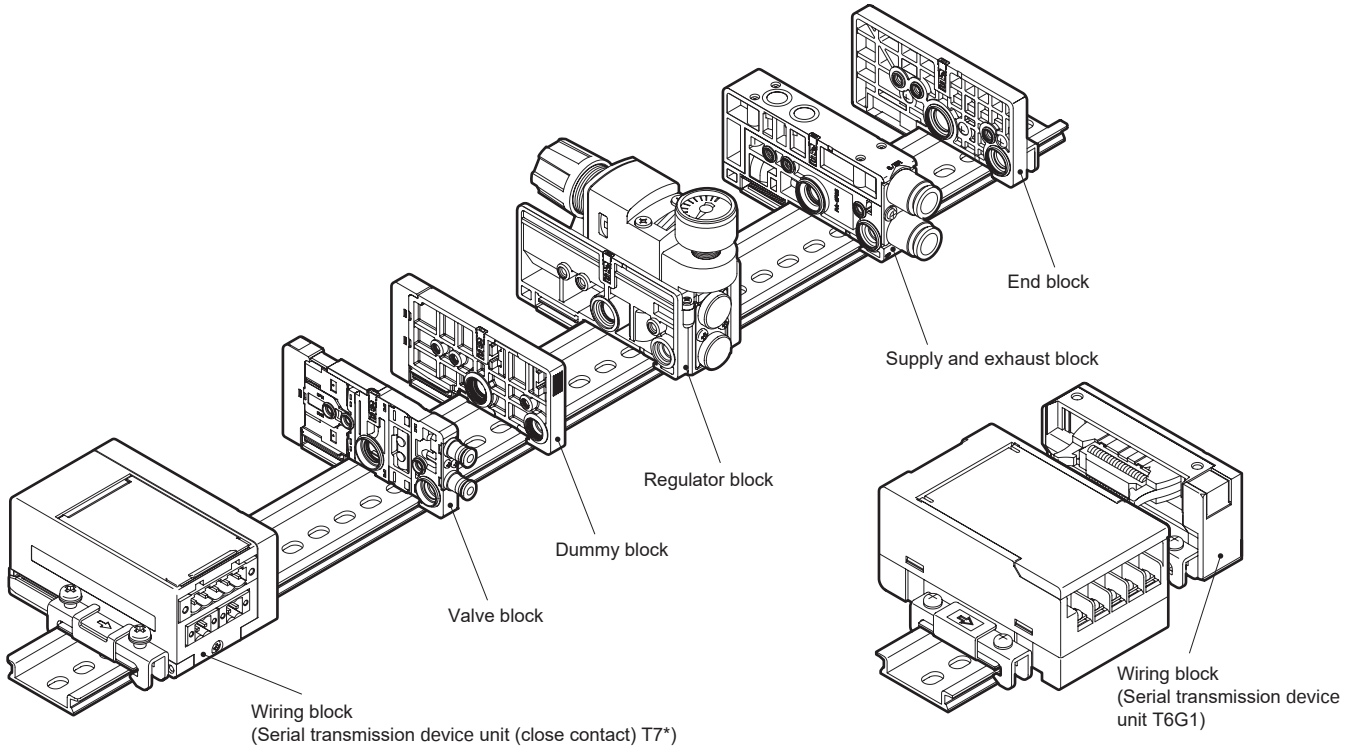

Example of main component model No. (Refer to pages 922 to 932 for details)

Part name	Model No. (example)	Part name	Model No. (example)
Wiring block	N4E0-T7G2	Supply and exhaust block	N4E0-Q-8
Valve block	N4E0020-C3-3	End block	N4E0-ER
Dummy block	N4E0-MPD		
Regulator block	N4E0-RA-RL		

Related parts list

Part name	Model No. (example)	Part name	Model No. (example)
Cartridge push-in fitting and related parts	N4E00-JOINT-C18	Cartridge push-in fitting and related parts	N4E00-JOINT-CPG
	N4E00-JOINT-C3		
	N4E00-JOINT-C4		
	N4E00-JOINT-CL18		
	N4E00-JOINT-CL3		
	N4E00-JOINT-CL4		
	N4E00-JOINT-C3N		
	N4E00-JOINT-C4N		
	N4E00-JOINT-CL3N		
	N4E00-JOINT-CL4N		

MEMO

Internal structure and parts list

3-port valve

N3E0010

● 2-position single normally closed

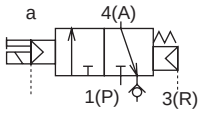

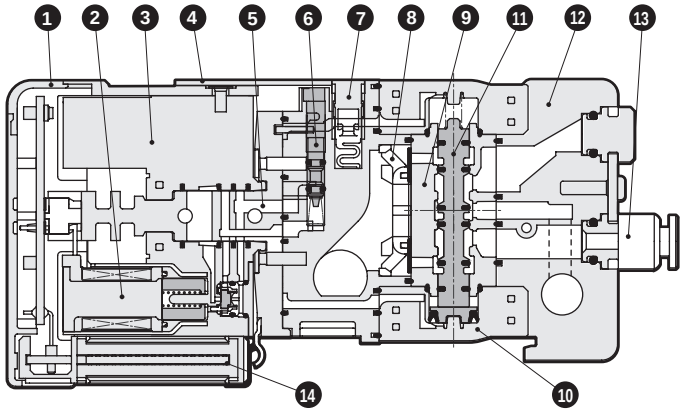

N3E00110

● 2-position single normally open

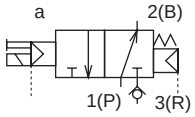

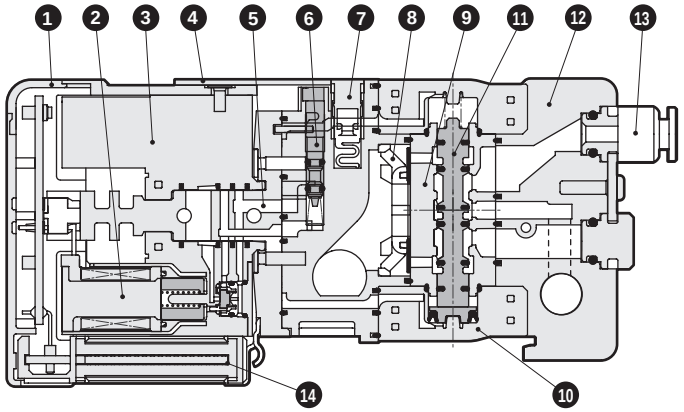

Main parts list

No.	Part name	Main material	No.	Part name	Main material
1	Wiring cover	PBT/PC	8	Check valve	PBT/TPU
2	Coil assembly	-	9	Body	ZDC
3	Coil dummy	PPS	10	Piston chamber assembly	PPS/POM
4	Manual cover	PBT	11	Spool assembly	AL
5	Pilot block assembly	PPS	12	Port block assembly	PA
6	Manual override	POM	13	Cartridge push-in fitting	-
7	Connection key	POM	14	Wiring connector assembly	LCP

Internal structure and parts list

N3E0020

● 2-position double normally closed (self-hold)

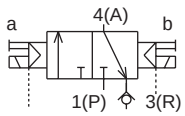

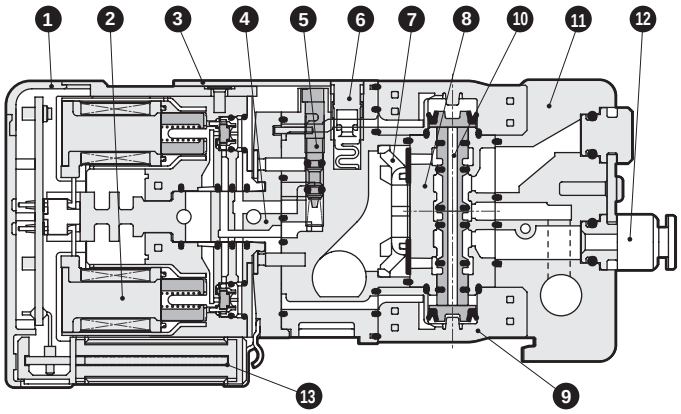

N3E00210

● 2-position double normally open (self-hold)

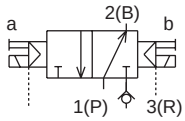

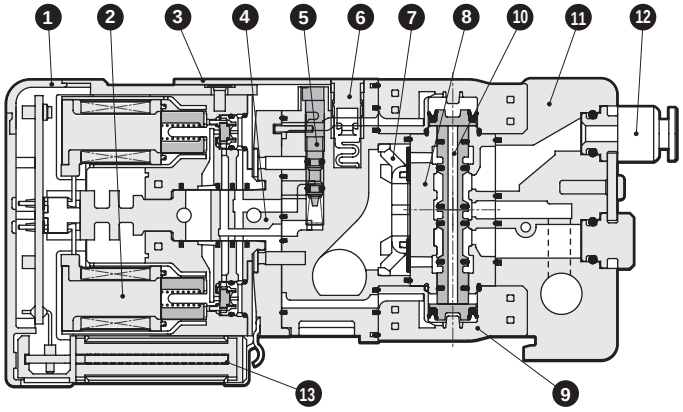

Main parts list

No.	Part name	Main material	No.	Part name	Main material
1	Wiring cover	PBT/PC	8	Body	ZDC
2	Coil assembly	-	9	Piston chamber assembly	PPS/POM
3	Manual cover	PBT	10	Spool assembly	AL
4	Pilot block assembly	PPS	11	Port block assembly	PA
5	Manual override	POM	12	Cartridge push-in fitting	-
6	Connection key	POM	13	Wiring connector assembly	LCP
7	Check valve	PBT/TPU			

Internal structure and parts list

Two 3-port valves integrated

N3E00660

● NC/NC self-reset (differential pressure return)

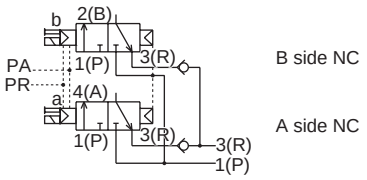

N3E00670

● NC/NO self-reset (differential pressure return)

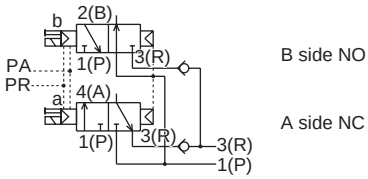

N3E00760

● NO/NC self-reset (differential pressure return)

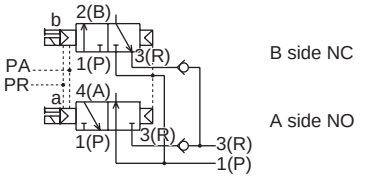

N3E00770

● NO/NO self-reset (differential pressure return)

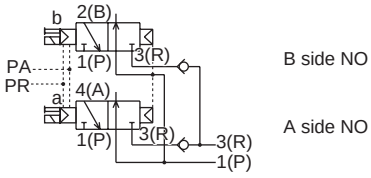

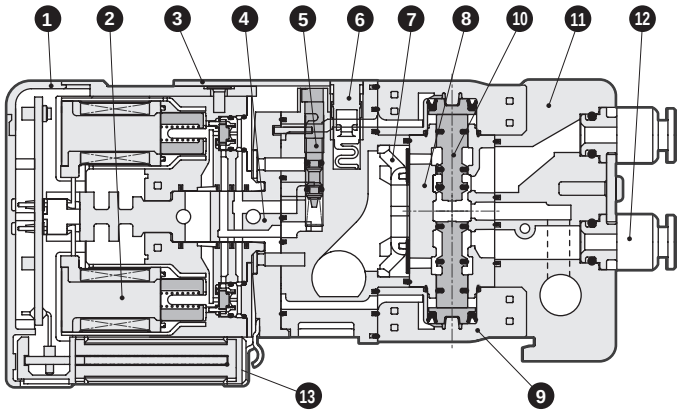

The figure shows an NC/NO self-reset (differential pressure return) with two 3-port valves integrated and both sides solenoid valves OFF.

Main parts list

No.	Part name	Main material	No.	Part name	Main material
1	Wiring cover	PBT/PC	8	Body	ZDC
2	Coil assembly	-	9	Piston chamber assembly	PPS/POM
3	Manual cover	PBT	10	Spool assembly	AL
4	Pilot block assembly	PPS	11	Port block assembly	PA
5	Manual override	POM	12	Cartridge push-in fitting	-
6	Connection key	POM	13	Wiring connector assembly	LCP
7	Check valve	PBT/TPU			

Internal structure and parts list

N3E0066S0

● NC/NC self-reset (differential pressure spring return)

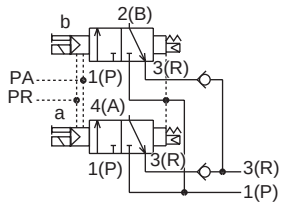

N3E0067S0

● NC/NO self-reset (differential pressure spring return)

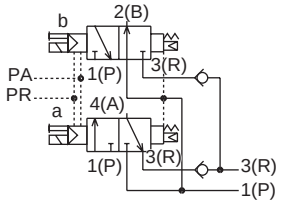

N3E0076S0

● NO/NC self-reset (differential pressure spring return)

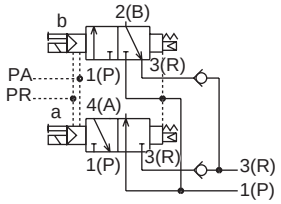

N3E0077S0

● NO/NO self-reset (differential pressure spring return)

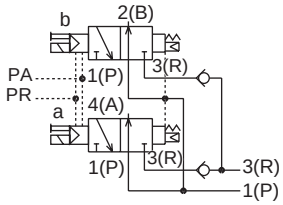

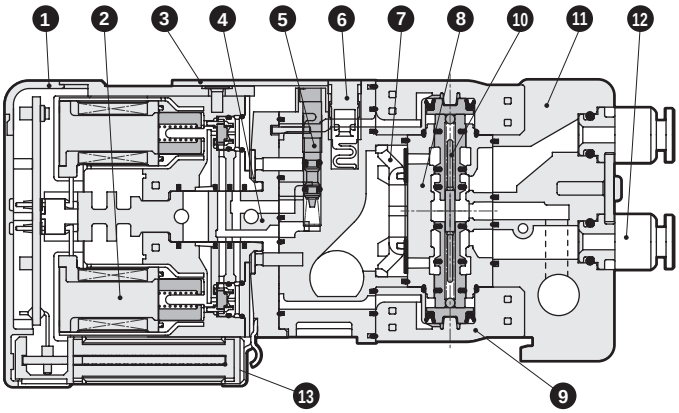

The figure shows an NC/NO self-reset (differential pressure spring return) with two 3-port valves integrated and both sides solenoid valves OFF.

Main parts list

No.	Part name	Main material	No.	Part name	Main material
1	Wiring cover	PBT/PC	8	Body	ZDC
2	Coil assembly	-	9	Piston chamber assembly	PPS/POM
3	Manual cover	PBT	10	Spool assembly	AL
4	Pilot block assembly	PPS	11	Port block assembly	PA
5	Manual override	POM	12	Cartridge push-in fitting	-
6	Connection key	POM	13	Wiring connector assembly	LCP
7	Check valve	PBT/TPU			

Internal structure and parts list

4-port valve

N4E0010

● 2-position single self-reset (differential pressure spring return)

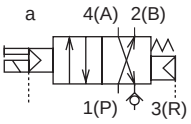

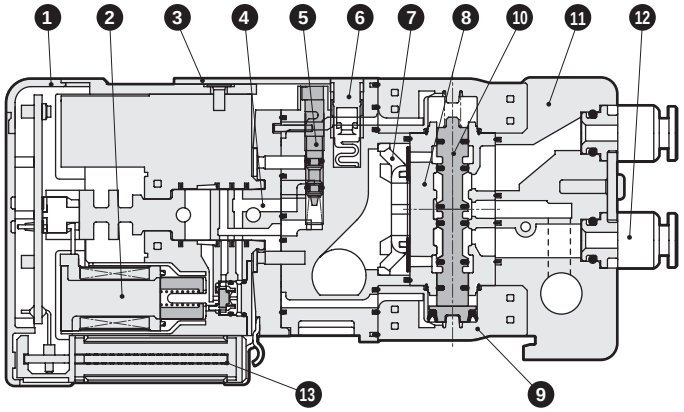

N4E0020

● 2-position double self-hold

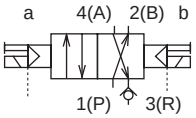

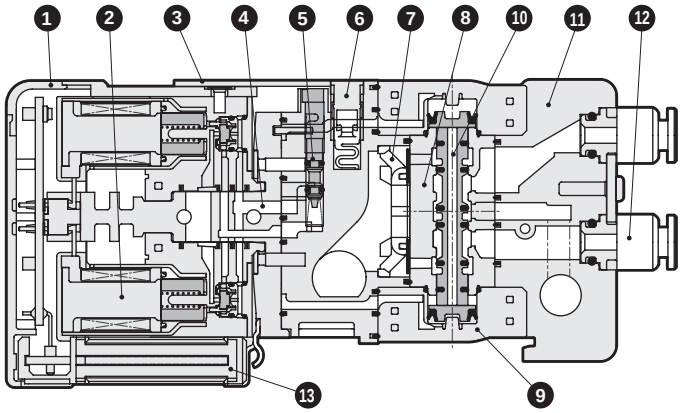

Main parts list

No.	Part name	Main material	No.	Part name	Main material
1	Wiring cover	PBT/PC	8	Body	ZDC
2	Coil assembly	-	9	Piston chamber assembly	PPS/POM
3	Manual cover	PBT	10	Spool assembly	AL
4	Pilot block assembly	PPS	11	Port block assembly	PA
5	Manual override	POM	12	Cartridge push-in fitting	-
6	Connection key	POM	13	Wiring connector assembly	LCP
7	Check valve	PBT/TPU			

Internal structure and parts list

Supply and exhaust block

N4E0-Q

● For internal pilot

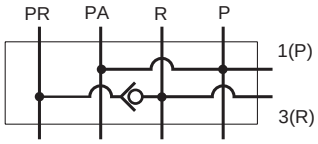

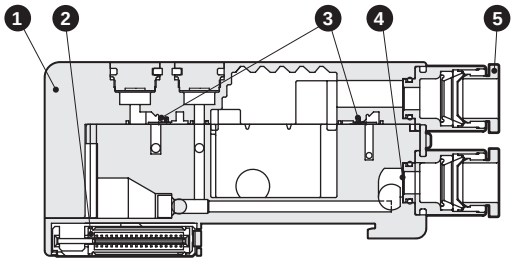

N4E0-QK

● For external pilot

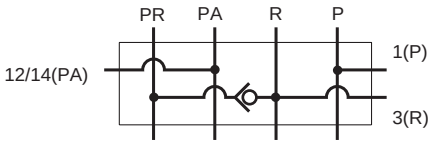

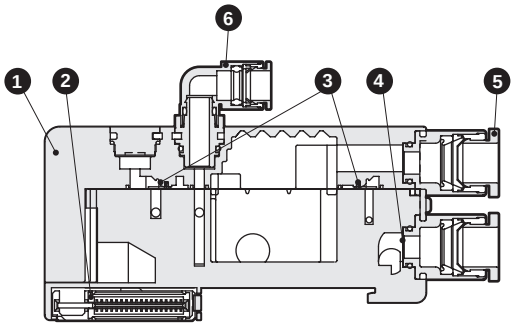

N4E0-QZ

● For multi-pressure circuit

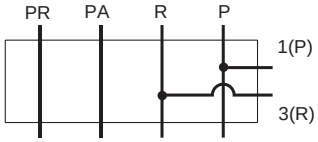

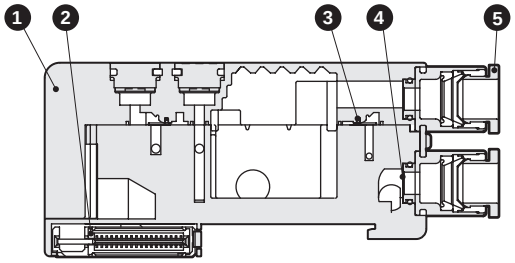

N4E0-QKZ

● PA/PR separated for external pilot

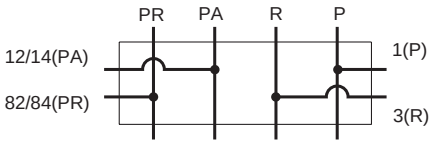

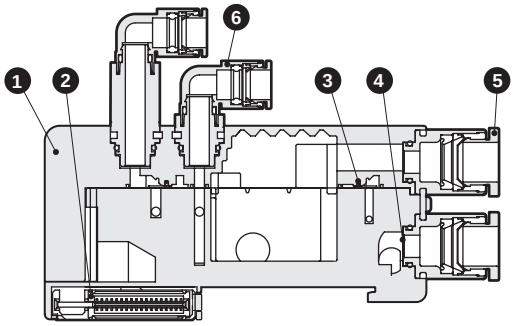

Main parts list

No.	Part name	Main material
1	Supply and exhaust block	PA
2	Wiring connector assembly	LCP
3	Check valve	TPU
4	Air supply filter	SUS
5	Cartridge push-in fitting (main piping section)	-
6	Cartridge push-in fitting (external pilot piping section)	-

Internal structure and parts list

Supply and exhaust block

N4E0-QX

● Atmosphere release for internal pilot

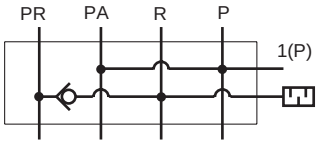

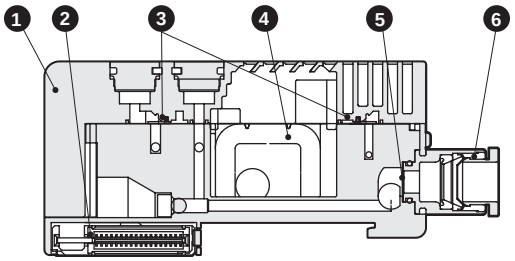

N4E0-QKX

● Atmosphere release for external pilot

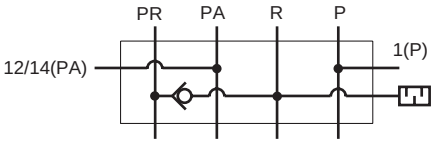

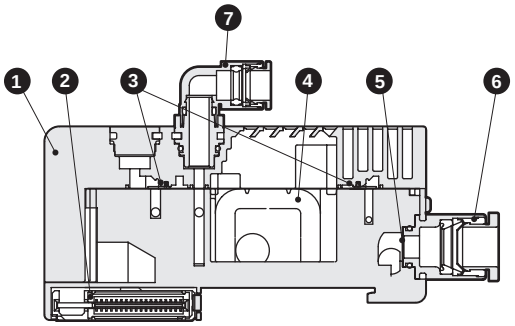

Main parts list

No.	Part name	Main material
1	Supply and exhaust block	PA
2	Wiring connector assembly	LCP
3	Check valve	TPU
4	Exhaust filter	-
5	Air supply filter	SUS
6	Cartridge push-in fitting (main piping section)	-
7	Cartridge push-in fitting (external pilot piping section)	-

Dimensions

MN$^{3}_{4}$E00*-*-T30(N)*-*-*

● D-sub-connector left side (T30(N))

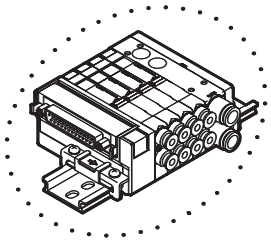

* D-sub-connector projection can be switched between upward and downward directions.
* For how to switch the connector direction, refer to page 895.

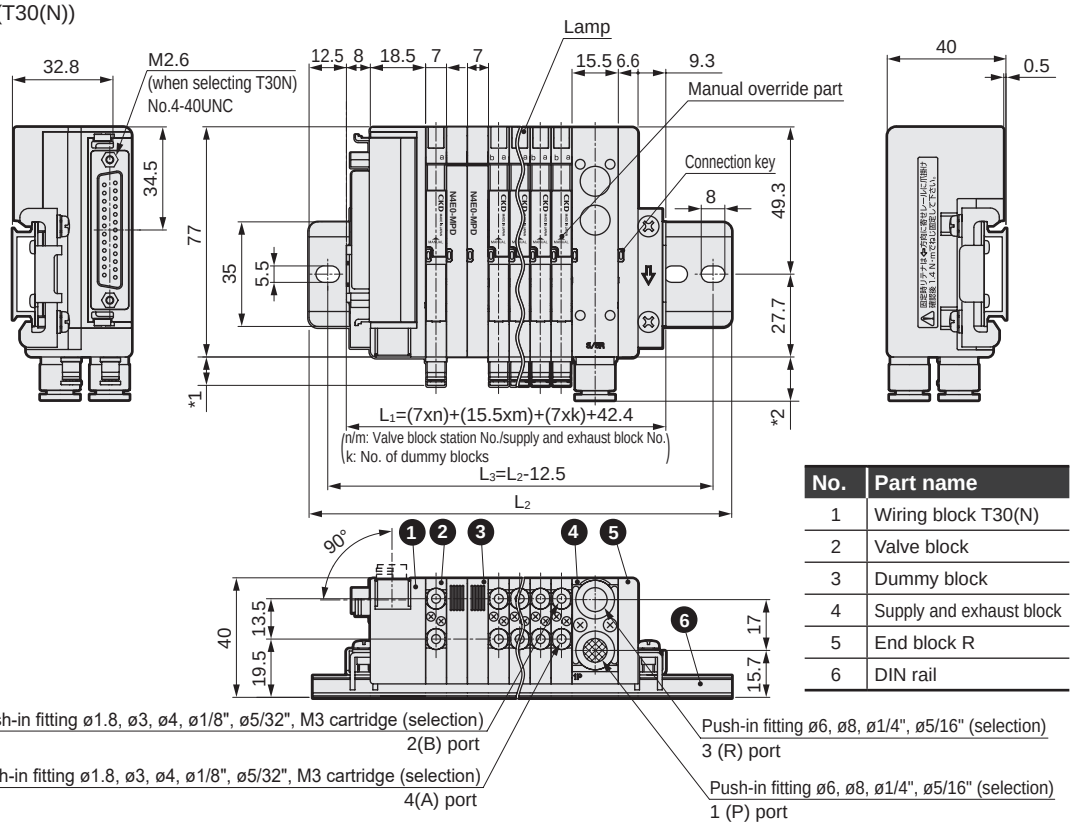

No.	Part name
1	Wiring block T30(N)
2	Valve block
3	Dummy block
4	Supply and exhaust block
5	End block R
6	DIN rail

*1: Valve block fitting dimensions		
Push-in fitting	ø1.8	6.8
	ø3	9.5
	ø4	11.9
	ø1/8"	12.2
	ø5/32"	11.9
M3 Female thread		6.1

*2: Supply/exhaust block fit. dim.	
ø6	14
ø8	14.8
ø1/4"	15.1
ø5/16"	15.3

* For dimensions of the push-in L fittings (upward) for valve block and for supply and exhaust block, refer to page 895.

MN$^{3}_{4}$E00*-*-T30(N)R*-*-*

● D-sub-connector right side (T30(N)R)

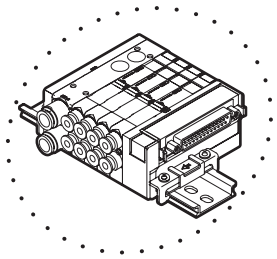

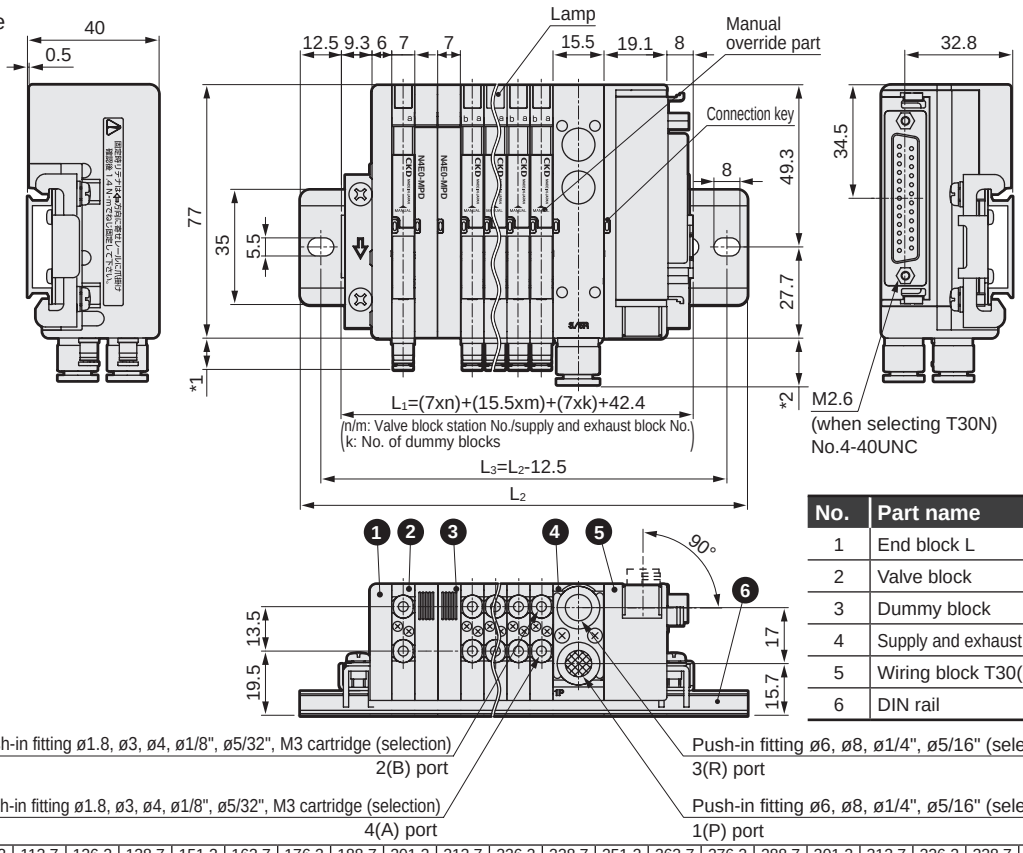

No.	Part name
1	End block L
2	Valve block
3	Dummy block
4	Supply and exhaust block
5	Wiring block T30(N)R
6	DIN rail

*1: Valve block fitting dimensions		
Push-in fitting	ø1.8	6.8
	ø3	9.5
	ø4	11.9
	ø1/8"	12.2
	ø5/32"	11.9
M3 Female thread		6.1

*2: Supply/exhaust block fit. dim.	
ø6	14
ø8	14.8
ø1/4"	15.1
ø5/16"	15.3

Manifold length L1 mm	76.2 or less	88.7 or less	101.2 or less	113.7 or less	126.2 or less	138.7 or less	151.2 or less	163.7 or less	176.2 or less	188.7 or less	201.2 or less	213.7 or less	226.2 or less	238.7 or less	251.2 or less	263.7 or less	276.2 or less	288.7 or less	301.2 or less	313.7 or less	326.2 or less	338.7 or less	351.2 or less
Mounting rail length L2 mm	100	112.5	125	137.5	150	162.5	175	187.5	200	212.5	225	237.5	250	262.5	275	287.5	300	312.5	325	337.5	350	362.5	375
Mounting rail pitch L3 mm	87.5	100	112.5	125	137.5	150	162.5	175	187.5	200	212.5	225	237.5	250	262.5	275	287.5	300	312.5	325	337.5	350	362.5

Dimensions

MN3/4E00*-*-T50*-*-*

● Flat cable connector left side (T50)

* T51, T52 and T53 are also available. Dimensions are the same as T50. Refer to *3: Connector dimensions for dimensions of the connector.

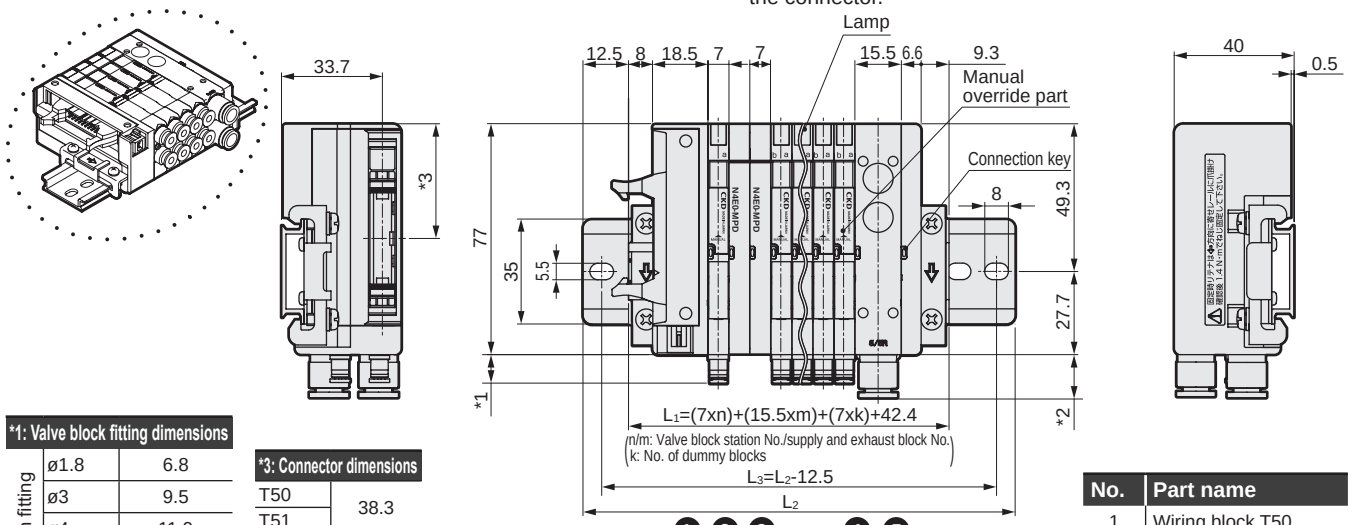

*1: Valve block fitting dimensions		
Push-in fitting	ø1.8	6.8
	ø3	9.5
	ø4	11.9
	ø1/8"	12.2
	ø5/32"	11.9
M3 Female thread		6.1

*3: Connector dimensions	
T50	38.3
T51	
T52	32.0
T53	34.5

*2: Supply/exhaust block fit. dim.	
ø6	14
ø8	14.8
ø1/4"	15.1
ø5/16"	15.3

No.	Part name
1	Wiring block T50
2	Valve block
3	Dummy block
4	Supply and exhaust block
5	End block R
6	DIN rail

* For dimensions of the push-in L fittings (upward) for valve block and for supply and exhaust block, refer to page 895.

* A power feed connector can be used with T50 to supply power to the PLC output unit. Refer to page 895 for connector dimensions, to page 936 for how to wire, and to the wiring precautions.

MN3/4E00*-*-T50R*-*-*

● Flat cable connector right side (T50R)

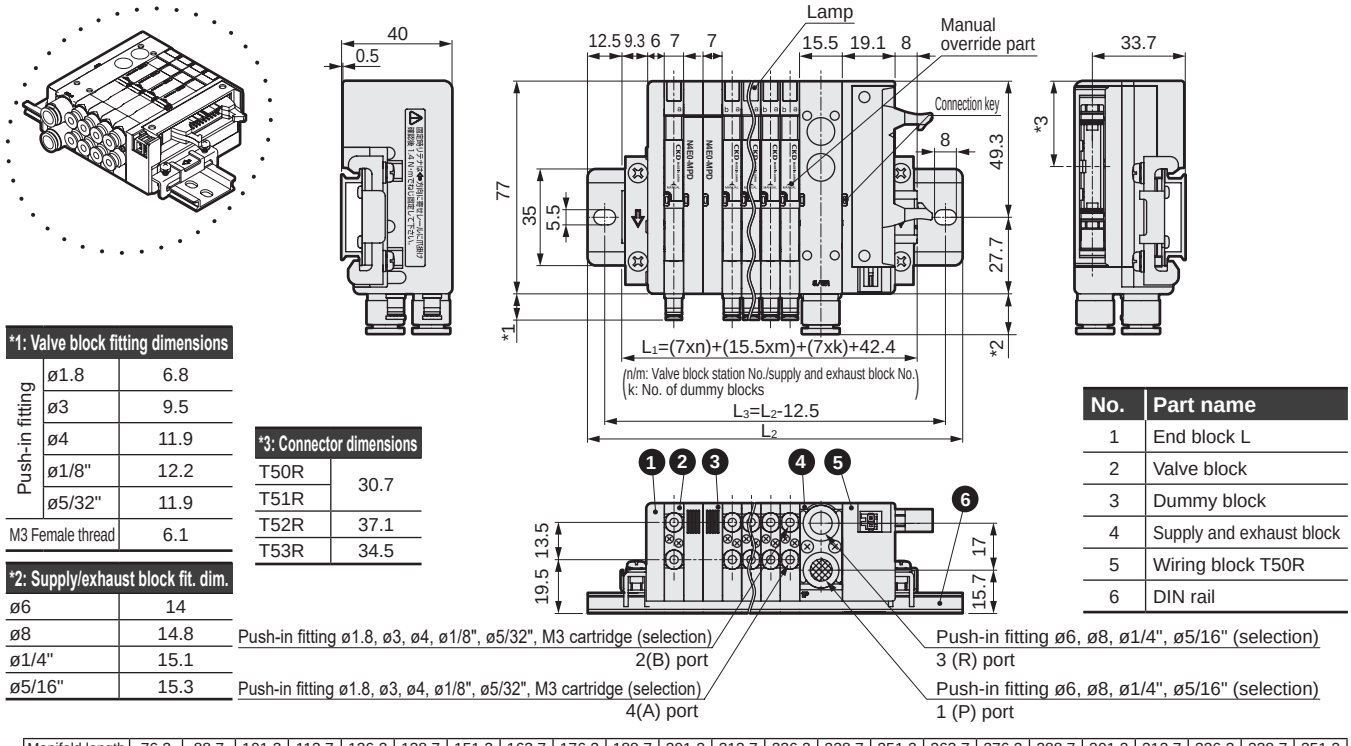

*1: Valve block fitting dimensions		
Push-in fitting	ø1.8	6.8
	ø3	9.5
	ø4	11.9
	ø1/8"	12.2
	ø5/32"	11.9
M3 Female thread		6.1

*3: Connector dimensions	
T50R	30.7
T51R	
T52R	37.1
T53R	34.5

*2: Supply/exhaust block fit. dim.	
ø6	14
ø8	14.8
ø1/4"	15.1
ø5/16"	15.3

No.	Part name
1	End block L
2	Valve block
3	Dummy block
4	Supply and exhaust block
5	Wiring block T50R
6	DIN rail

Manifold length L1 mm	76.2 or less	88.7 or less	101.2 or less	113.7 or less	126.2 or less	138.7 or less	151.2 or less	163.7 or less	176.2 or less	188.7 or less	201.2 or less	213.7 or less	226.2 or less	238.7 or less	251.2 or less	263.7 or less	276.2 or less	288.7 or less	301.2 or less	313.7 or less	326.2 or less	338.7 or less	351.2 or less
Mounting rail length L2 mm	100	112.5	125	137.5	150	162.5	175	187.5	200	212.5	225	237.5	250	262.5	275	287.5	300	312.5	325	337.5	350	362.5	375
Mounting rail pitch L3 mm	87.5	100	112.5	125	137.5	150	162.5	175	187.5	200	212.5	225	237.5	250	262.5	275	287.5	300	312.5	325	337.5	350	362.5

Dimensions

MN$^{3}_{4}$E00*-*-TM1$^{A}_{C}$*-*-*

● RITS connector intermediate wiring specifications (TM1$^{A}_{C}$)

MN$^{3}_{4}$E00*-*-TM52*-*-*

● 10-pin flat cable connector intermediate wiring specifications (TM52)

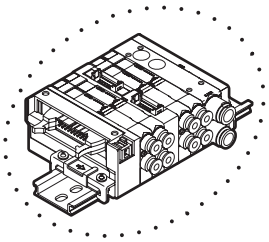

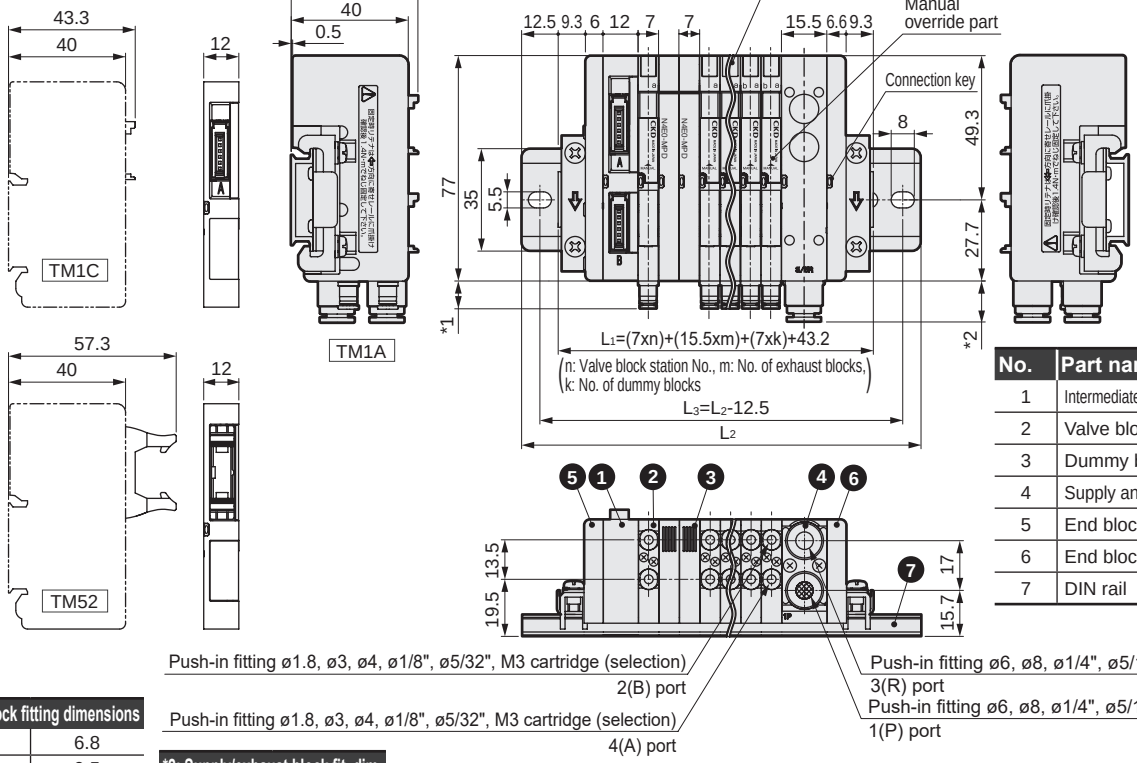

No.	Part name
1	Intermediate wiring block TM1A
2	Valve block
3	Dummy block
4	Supply and exhaust block
5	End block L
6	End block R
7	DIN rail

*1: Valve block fitting dimensions		
Push-in fitting	ø1.8	6.8
	ø3	9.5
	ø4	11.9
	ø1/8"	12.2
	ø5/32"	11.9
M3 Female thread		6.1

*2: Supply/exhaust block fit. dim.	
ø6	14
ø8	14.8
ø1/4"	15.1
ø5/16"	15.3

Manifold length L1 mm	76.2 or less	88.7 or less	101.2 or less	113.7 or less	126.2 or less	138.7 or less	151.2 or less	163.7 or less	176.2 or less	188.7 or less	201.2 or less	213.7 or less	226.2 or less	238.7 or less	251.2 or less	263.7 or less	276.2 or less	288.7 or less	301.2 or less	313.7 or less	326.2 or less	338.7 or less	351.2 or less
Mounting rail length L2 mm	100	112.5	125	137.5	150	162.5	175	187.5	200	212.5	225	237.5	250	262.5	275	287.5	300	312.5	325	337.5	350	362.5	375
Mounting rail pitch L3 mm	87.5	100	112.5	125	137.5	150	162.5	175	187.5	200	212.5	225	237.5	250	262.5	275	287.5	300	312.5	325	337.5	350	362.5

Dimensions

MN$^{3}_{4}$E00*-*-T6G1-*-*

● Serial transmission (T6G1)

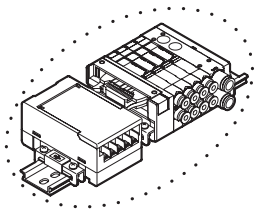

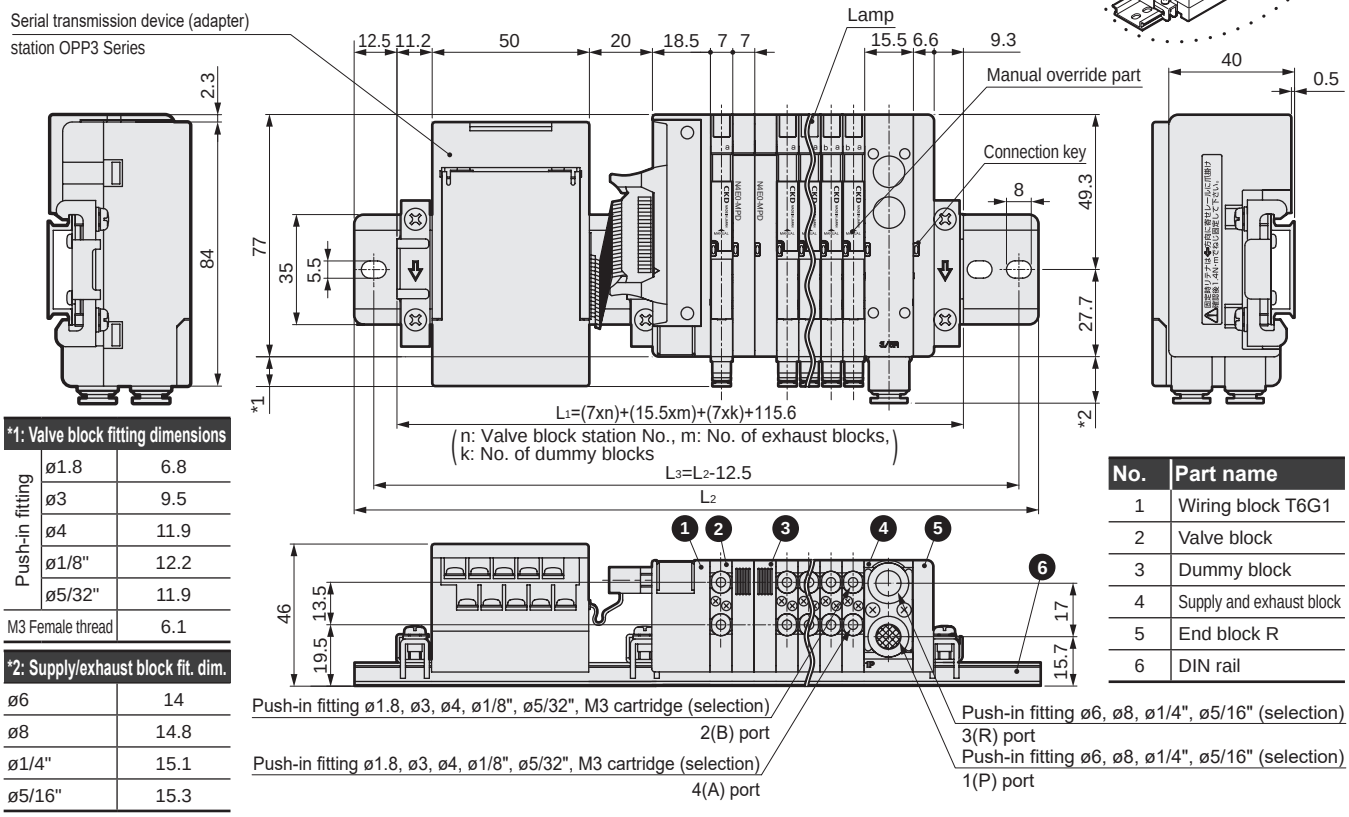

*1: Valve block fitting dimensions		
Push-in fitting	ø1.8	6.8
	ø3	9.5
	ø4	11.9
	ø1/8"	12.2
	ø5/32"	11.9
M3 Female thread		6.1

*2: Supply/exhaust block fit. dim.	
ø6	14
ø8	14.8
ø1/4"	15.1
ø5/16"	15.3

No.	Part name
1	Wiring block T6G1
2	Valve block
3	Dummy block
4	Supply and exhaust block
5	End block R
6	DIN rail

MN$^{3}_{4}$E00*-*-T7**-*-*

● Serial transmission (close contact) (T7*)

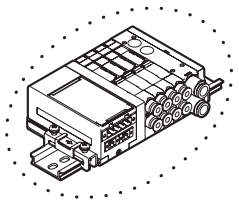

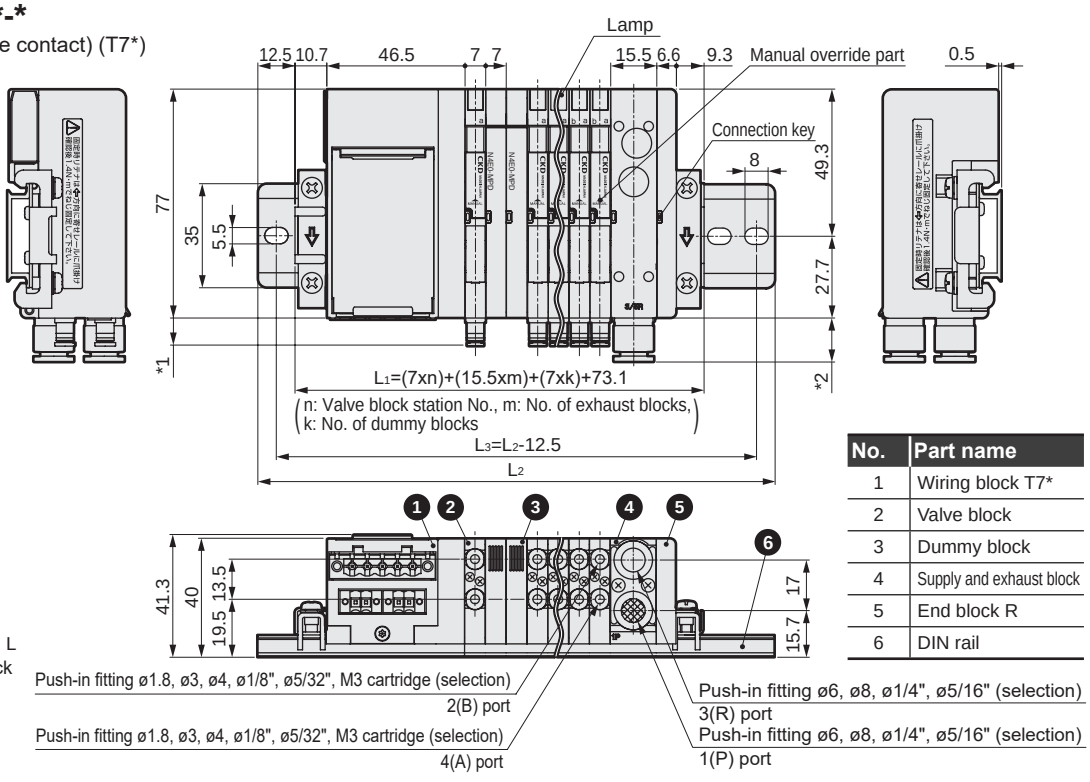

*1: Valve block fitting dimensions		
Push-in fitting	ø1.8	6.8
	ø3	9.5
	ø4	11.9
	ø1/8"	12.2
	ø5/32"	11.9
M3 Female thread		6.1

*2: Supply/exhaust block fit. dim.	
ø6	14
ø8	14.8
ø1/4"	15.1
ø5/16"	15.3

No.	Part name
1	Wiring block T7*
2	Valve block
3	Dummy block
4	Supply and exhaust block
5	End block R
6	DIN rail

* For dimensions of the push-in L fittings (upward) for valve block and for supply and exhaust block, refer to page 895.

Manifold length L1 mm	76.2 or less	88.7 or less	101.2 or less	113.7 or less	126.2 or less	138.7 or less	151.2 or less	163.7 or less	176.2 or less	188.7 or less	201.2 or less	213.7 or less	226.2 or less	238.7 or less	251.2 or less	263.7 or less	276.2 or less	288.7 or less	301.2 or less	313.7 or less	326.2 or less	338.7 or less	351.2 or less
Mounting rail length L2 mm	100	112.5	125	137.5	150	162.5	175	187.5	200	212.5	225	237.5	250	262.5	275	287.5	300	312.5	325	337.5	350	362.5	375
Mounting rail pitch L3 mm	87.5	100	112.5	125	137.5	150	162.5	175	187.5	200	212.5	225	237.5	250	262.5	275	287.5	300	312.5	325	337.5	350	362.5

Dimensions

MN$\frac{3}{4}$E00*-*-T7**-*-*

● Serial transmission (T7EC□□)

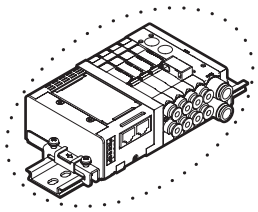

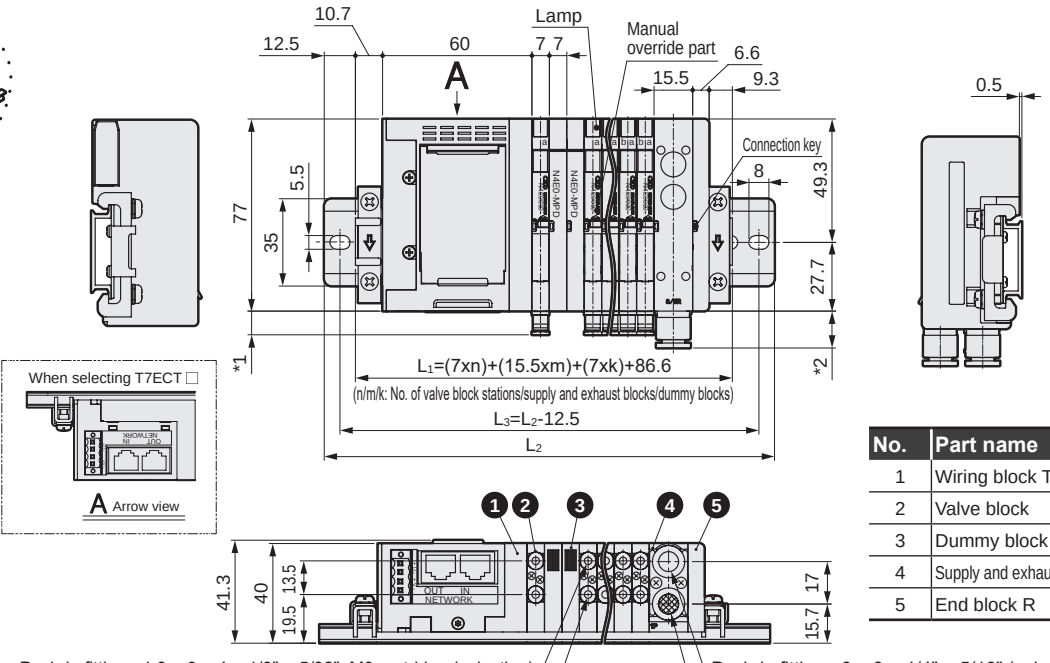

*1: Valve block fitting dimensions		
Push-in fitting	ø1.8	6.8
	ø3	9.5
	ø4	11.9
	ø1/8"	12.2
	ø5/32"	11.9
M3 Female thread		6.1

*2: Supply/exhaust block fit. dim.	
ø6	14
ø8	14.8
ø1/4"	15.1
ø5/16"	15.3

No.	Part name
1	Wiring block T7*
2	Valve block
3	Dummy block
4	Supply and exhaust block
5	End block R

MN$\frac{3}{4}$E00*-*-(D2 to D3)-*-*

● Individual wiring connector (D2/D20/D21/D22/D23/D2N/D3)

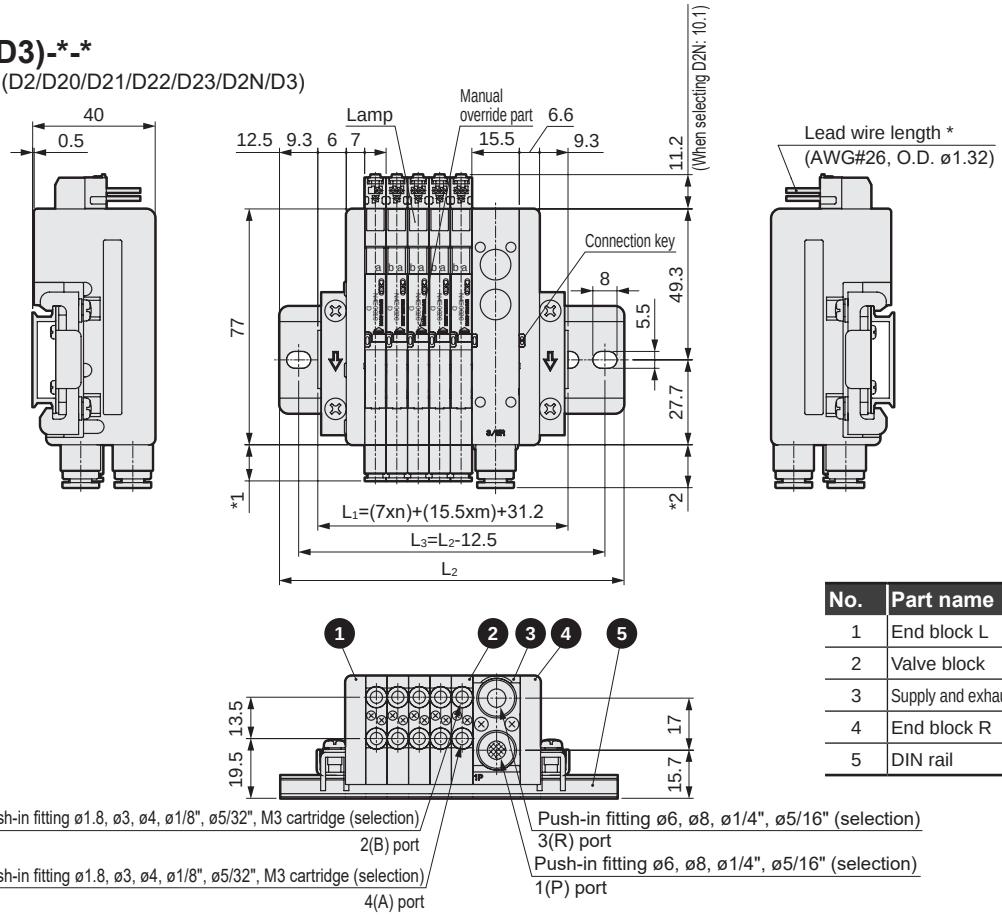

*1: Valve block fitting dimensions		
Push-in fitting	ø1.8	6.8
	ø3	9.5
	ø4	11.9
	ø1/8"	12.2
	ø5/32"	11.9
M3 Female thread		6.1

*2: Supply/exhaust block fit. dim.	
ø6	14
ø8	14.8
ø1/4"	15.1
ø5/16"	15.3

No.	Part name
1	End block L
2	Valve block
3	Supply and exhaust block
4	End block R
5	DIN rail

Manifold length L1 mm	63.7 or less	76.2 or less	88.7 or less	101.2 or less	113.7 or less	126.2 or less	138.7 or less	151.2 or less	163.7 or less	176.2 or less	188.7 or less	201.2 or less	213.7 or less	226.2 or less	238.7 or less	251.2 or less	263.7 or less	276.2 or less	288.7 or less	301.2 or less	313.7 or less	326.2 or less	338.7 or less	351.2 or less
Mounting rail length L2 mm	87.5	100	112.5	125	137.5	150	162.5	175	187.5	200	212.5	225	237.5	250	262.5	275	287.5	300	312.5	325	337.5	350	362.5	375
Mounting rail pitch L3 mm	75	87.5	100	112.5	125	137.5	150	162.5	175	187.5	200	212.5	225	237.5	250	262.5	275	287.5	300	312.5	325	337.5	350	362.5

Dimensions

● Piping blocks (common for all types)

Regulator block

MN$\frac{3}{4}$E00*0-*- R -*

● Pressure adjustment knob direction: Wiring side (RA)

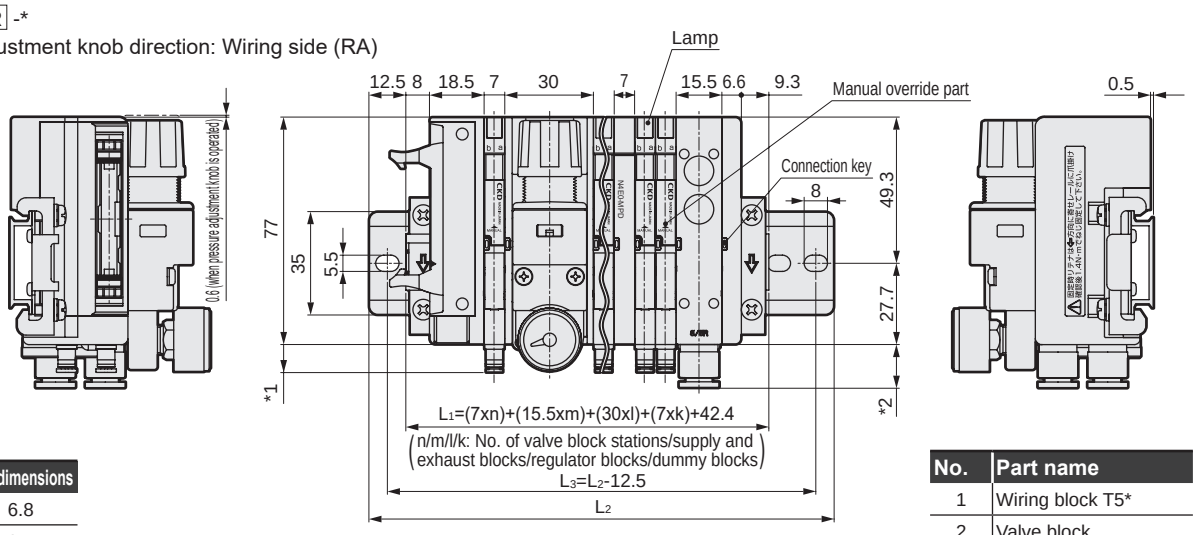

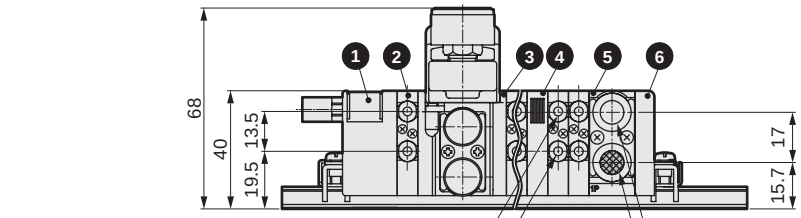

Push-in fitting ø1.8, ø3, ø4, ø1/8", ø5/32", M3 cartridge (selection)
2(B) port
Push-in fitting ø6, ø8, ø1/4", ø5/16" (selection)
3(R) port
Push-in fitting ø1.8, ø3, ø4, ø1/8", ø5/32", M3 cartridge (selection)
4(A) port
Push-in fitting ø6, ø8, ø1/4", ø5/16" (selection)
1(P) port

*1: Valve block fitting dimensions		
Push-in fitting	ø1.8	6.8
	ø3	9.5
	ø4	11.9
	ø1/8"	12.2
	ø5/32"	11.9
M3 Female thread		6.1

*2: Supply/exhaust block fit. dim.	
ø6	14
ø8	14.8
ø1/4"	15.1
ø5/16"	15.3

No.	Part name
1	Wiring block T5*
2	Valve block
3	Regulator block
4	Dummy block
5	Supply and exhaust block
6	End block R

● Pressure adjustment knob direction: Port side (RB)

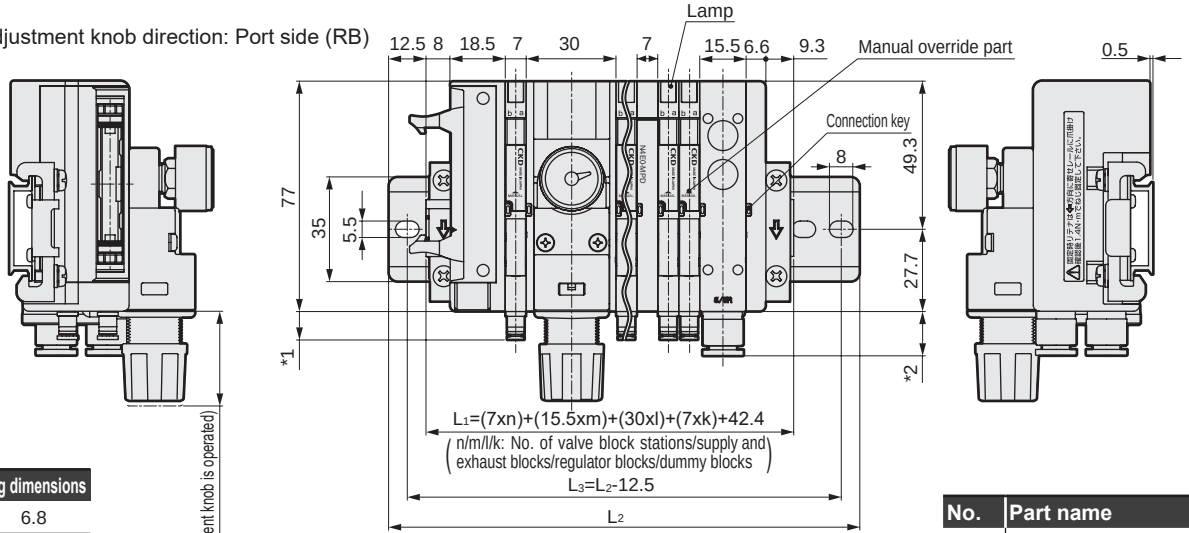

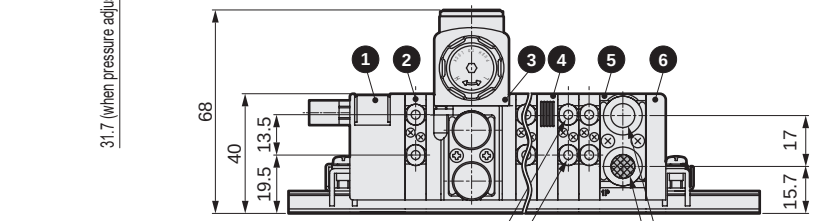

Push-in fitting ø1.8, ø3, ø4, ø1/8", ø5/32", M3 cartridge (selection)
2(B) port
Push-in fitting ø6, ø8, ø1/4", ø5/16" (selection)
3(R) port
Push-in fitting ø1.8, ø3, ø4, ø1/8", ø5/32", M3 cartridge (selection)
4(A) port
Push-in fitting ø6, ø8, ø1/4", ø5/16" (selection)
1(P) port

*1: Valve block fitting dimensions		
Push-in fitting	ø1.8	6.8
	ø3	9.5
	ø4	11.9
	ø1/8"	12.2
	ø5/32"	11.9
M3 Female thread		6.1

*2: Supply/exhaust block fit. dim.	
ø6	14
ø8	14.8
ø1/4"	15.1
ø5/16"	15.3

No.	Part name
1	Wiring block T5*
2	Valve block
3	Regulator block
4	Dummy block
5	Supply and exhaust block
6	End block R

Dimensions

● Piping blocks (common for all types)

For fiber tube
Push-in fitting (upward)
● ø1.8 (CL18)

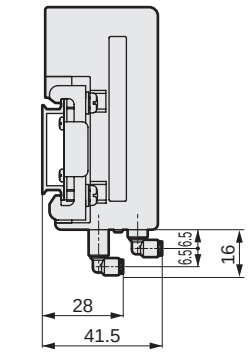

Push-in fitting (upward)
● ø3 (CL3)

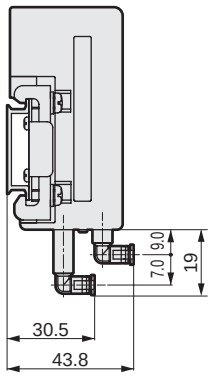

Push-in fitting (upward)
● ø4 (CL4)

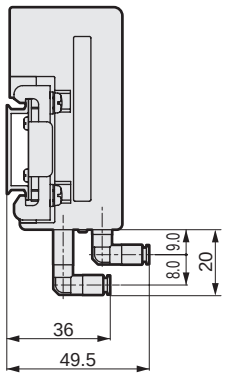

Push-in fitting (upward)
● ø1/8" (CL3N)

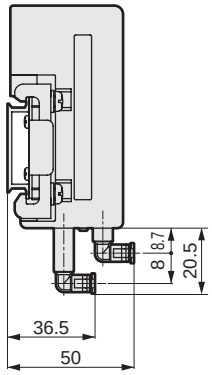

Push-in fitting (upward)
● ø5/32" (CL4N)

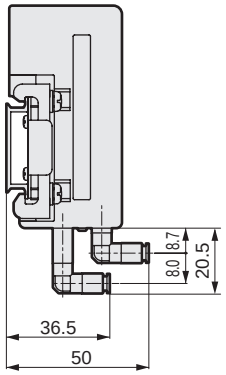

Supply and exhaust block
Push-in L fitting (upward)
● ø6 (CL6)

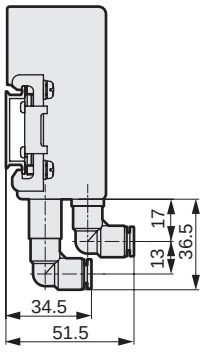

● ø8 (CL8)

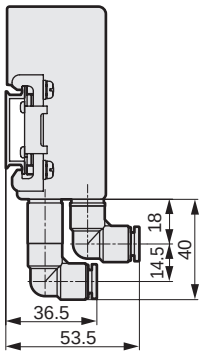

● ø1/4" (CL6N)

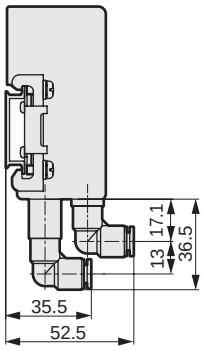

● ø5/16" (CL8N)

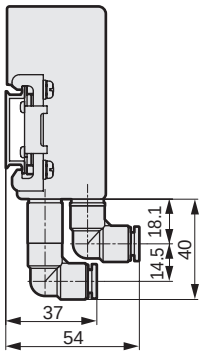

Supply and exhaust block for external pilot

● Upward piping

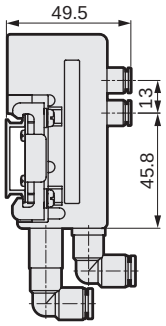

● Lateral piping

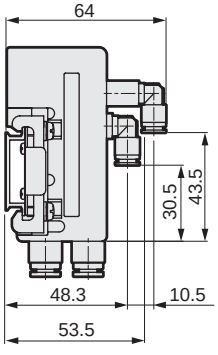

● Upward piping
(Inch fitting specifications)

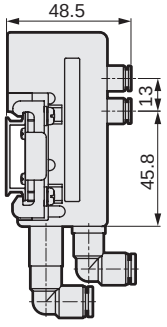

● Lateral piping
(Inch fitting specifications)

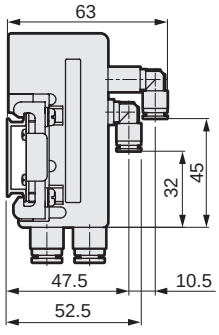

● Dimensions with T50 power supply connector

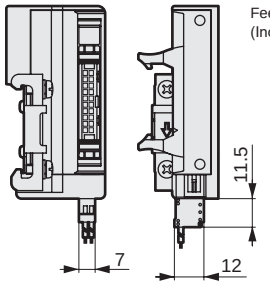

Feed connector
(Included with product)



Applicable wire
AWG28-20

● D-sub-connector (T30(N)/T30(N)R): How to switch the connector direction

Usage in a horizontal state

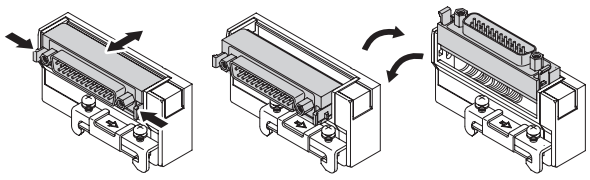

Usage in a vertical state

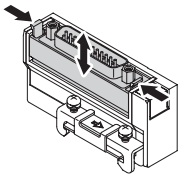

Hold the lever and pull the connector out horizontally. Push in the connector horizontally for storage. (Must be fixed.)

Rotate the connector. Fix the connector in the horizontal or vertical state during use.

Hold the lever and pull the connector out vertically. Push in the connector horizontally for storage. (Must be fixed.)

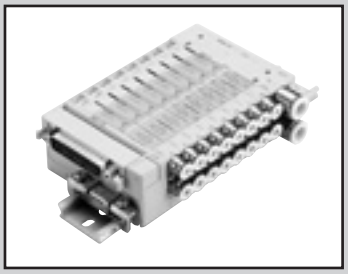

Reduced wiring block manifold
Pilot operated 3, 4-port valve

MN3E0/MN4E0 Series

Common specifications

Item		Description
Manifold method		Block manifolds
Manifold		Common supply/exhaust Exhaust check valve built-in (*1)
Working fluid		Compressed air
Valve and operation		Pilot operated soft spool valve
Max. working pressure	MPa	0.7
Min. working pressure	MPa	0.2
Proof pressure	MPa	1.05
Ambient temperature	°C	5 to 55
Fluid temperature	°C	5 to 55
Lubrication		Not required (*2)
Degree of protection		Dust-proof
Vibration resistance	m/s^2	50 or less
Shock resistance	m/s^2	300 or less
Atmosphere		Cannot be used in corrosive gas environments
Manual override		Lock/Non-locking common or dedicated Non-lock

*1: Check valve block back pressure from adjacent air Components, etc. However, the structure does not permit continuous pressure holding, so do not use for purposes other than blocking back pressure.

Electrical specifications

Item		Description
Rated voltage V		12, 24 DC
Voltage fluctuation range		±10% (When using serial transmission 10%, 5%)
Holding current A	24 VDC	0.025(0.013) (*3)
	12 VDC	0.05(0.025) (*3)
Power consumption W	24 VDC	0.6(0.3) (*3)
	12 VDC	
Thermal class		B
Indicator		LED

*2:As this product has non-lubrication specifications, adding oil may cause leakage of the grease initially sealed in, which may prevent the product from displaying its maximum performance.

*3:Values shown in ( ) are for low exoergic/energy circuit type. As well, when using the valve block with individual power supply function (AUX), type with low exoergic/energy circuit, energizing is limited to the plus common.

Individual specifications

Item \ Port		3-port valve	4-port valve	Two 3-port valves integrated *1
Port size	A/Port B	Push-in fitting ø1.8, ø4, ø6, M5, fiber tube		
	P/Port R	ø6, ø8 push-in fitting		
	External pilot port	ø6 push-in fitting		-

*1: The two 3-port valves integrated type uses main pressure to operate the valving element, and therefore cannot be used with external pilot. Check for sufficient supply air flow that the supply pressure does not drop below the min. working pressure due to the operation of the connected load (air operated valve), etc.

Max. number of stations energized by manifold

● T3 □ /T5 □ /TM □ /T6G1

Item		MN3E0/MN4E0								
		T30(N)	T50	T51	T52	T53	TM1A	TM1C	TM52	T6G1
Max. station No.	Standard wiring	24 stations	16 stations	18 stations	8 stations	24 stations	10 stations	5 stations	8 stations	16 stations
	Double wiring	12 stations	8 stations	9 stations	4 stations	12 stations	5 stations	2 stations	4 stations	8 stations
Max. number of solenoids		24 points	16 points	18 points	8 points	24 points	10 points	5 points	8 points	16 points

● T7 □

Item		MN3E00/MN4E00							
		T7D1	T7D2	T7G1	T7G2	T7N1	T7N2	T7EC□1	T7EC□2
Max. station No.	Standard wiring	16 stations	32 stations	16 stations	32 stations	16 stations	32 stations	16 stations	32 stations
	Double wiring	8 stations	16 stations	8 stations	16 stations	8 stations	16 stations	8 stations	16 stations
Max. number of solenoids		16 points	32 points	16 points	32 points	16 points	32 points	16 points	32 points

Performance/characteristics by model

Item \ Port		3-port valve	4-port valve	Two 3-port valves integrated
Response time (*1) ms	2-position single	20 or less	20 or less	12 or less
	Double	12 or less	12 or less	-
	3-position	-	20 or less	-

*1: The response times are values with supply pressure of 0.5 MPa, without lubrication.

Flow characteristics

			C[dm³/(s·bar)]	b
3-port valve	2-position		0.54	0.12
4-port valve	2-position		0.54	0.12
	3-position	All ports closed	0.50	0.08
		A/B/R connection	0.54	0.12
		P/A/B connection	0.50	0.11
Two 3-port valves integrated	2-position		0.50	0.16

*1: Effective cross-sectional area S and sonic conductance C are converted as S ≈ 5.0 x C.
*2: Value for ø4 push-in fitting

Device unit specifications

Item		T6G1 *1	T7D1 *2 T7D2	T7G1 *1 T7G2	T7N1 T7N2	T7EC□1 T7EC□2
Power supply voltage	Unit side	24 VDC ±10%	24 VDC ±10%			
	Valve side	24 VDC + 10% -5%	24 VDC + 10% -5%			
	Unit side	-	11 to 25 VDC	-		
Current consumption	Unit side	100 mA or less (When all points output ON)	T7D1: 60 mA or less, T7D2: 85 mA or less (When all points output ON)	T7G1: 65 mA or less, T7G2: 90 mA or less (When all points output ON)	T7N1: 40 mA or less T7N2: 50 mA or less (When all points output ON)	120 mA or less (When all points output ON)
	Valve side	15 mA or less (when all points OFF)	15 mA or less (when all points OFF)			
	Unit side	-	50 mA or less	-		
No. of I/O points		16 points	T7D1: 16 points T7D2: 32 points	T7G1: 16 points T7G2: 32 points	T7N1: 16 points T7N2: 32 points	T7EC□1: 16 points T7EC□2: 32 points
Occupied number		1 station	T7D1: 2 bytes T7D2: 4 bytes	T7G1: 1 station T7G2: 1 station	T7N1: Output 16 points T7N2: Output 32 points	T7EC□1: 1 address T7EC□2: 1 address

*1: CC-Link is Ver. 1.10.
*2: Contact CKD for information on the EDS file. (EDS file: A text file of parameters for communication with various companies' master units)

Weight

Wiring block (g)		D-sub-connector T30(N)	Flat cable connector T5*	Intermediate wiring block TM1A	TM1C	TM52	Serial transmission T6G1	T7*	T7EC*
		67	59	32	32	34	205	128	145
Supply and exhaust block (g)		Q/QZ	QK	QKZ		QX		QKX	
	Fitting Lateral	64	69	79		56		61	
	Fitting Upward	90	94	98		62		66	
Valve block (g)		2-position single	2-position double	3-position		Two 3-port valves integrated			
	Fitting Lateral	47.5	52	53.5		52			
	Fitting Upward	54.5	59	60.5		59			
Dummy block (g)		MPS/MPD							
		20							
Regulator block (g) *1		-							
		124							
End block (g)		ER/EL							
		40							
DIN rail (g)		-							
		0.19 g/mm							

*1: The values may differ slightly based on the regulator block specifications.

How to order manifold

D sub/flat cable connector

* Refer to page 902 for serial transmission.

● Discrete valve block

N 3 E0 66 0 - C4 —— M D2 [ ] F —— 3

● Block manifolds

M N 4 E0 1 0 - C4 - R - M T53 D2 W F - 5 - 3

- DIN rail Mounting method
- A Valve type
- B Solenoid position
- C Port size
- D Adjustment function
- E Manual override
- F Wiring method
- Individual wiring
- G Terminal/Connector pin array
- H Option
- I Station No.
- J Voltage

***Be sure to fill in the "Manifold specifications sheet" (page 957).**

Type	
Block manifolds	Discrete valve block
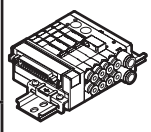	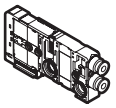

Code	Description			Block manifolds	Discrete valve block
A Valve type					
3	3-port valve or two 3-port valves integrated			●	●
4	4-port valve or 3, 4-port valve mix			●	●
B Solenoid position (*10)					
1	3-port valve	Single NC self-reset	(Differential pressure spring return)	●	●
11	3-port valve	Single NO self-reset	(Differential pressure spring return)	●	●
2	3-port valve	Double NC self-hold		●	●
21	3-port valve	Double NO self-hold		●	●
66	Two 3-port valves integrated (*1)	A side valve: NC self-reset B side valve: NC self-reset	(Differential pressure return) (Differential pressure spring return)	●	●
66S	Two 3-port valves integrated (*1)	A side valve: NC self-reset B side valve: NO self-reset	(Differential pressure return) (Differential pressure spring return)	●	●
67	Two 3-port valves integrated (*1)	A side valve: NO self-reset B side valve: NC self-reset	(Differential pressure return) (Differential pressure spring return)	●	●
67S	Two 3-port valves integrated (*1)	A side valve: NO self-reset B side valve: NO self-reset	(Differential pressure return) (Differential pressure spring return)	●	●
76	Two 3-port valves integrated (*1)	A side valve: NO self-reset B side valve: NC self-reset	(Differential pressure return) (Differential pressure spring return)	●	●
76S	Two 3-port valves integrated (*1)	A side valve: NO self-reset B side valve: NC self-reset	(Differential pressure return) (Differential pressure spring return)	●	●
77	Two 3-port valves integrated (*1)	A side valve: NO self-reset B side valve: NO self-reset	(Differential pressure return) (Differential pressure spring return)	●	●
77S	Two 3-port valves integrated (*1)	A side valve: NO self-reset B side valve: NO self-reset	(Differential pressure return) (Differential pressure spring return)	●	●
1	4-port valve	2-position single self-reset	(Differential pressure spring return)	●	●
2	4-port valve	2-position double self-hold		●	●
3	4-port valve	3-position all ports closed		●	●
4	4-port valve	3-position A/B/R connection		●	●
5	4-port valve	3-position P/A/B connection		●	●
8	Mix manifold			●	
C Port size					
CF	ø1.8 barbed fitting (compatible tube UP-9102-**)			●	●
C18	ø1.8 push-in fitting lateral (compatible tube UP-9402-**)			●	●
CL18	ø1.8 push-in fitting upward (compatible tube UP-9402-**)			●	●
C4	ø4 push-in fitting lateral			●	●
CL4	ø4 push-in fitting upward			●	●
C6	ø6 push-in fitting lateral			●	●
CL6	ø6 push-in fitting upward			●	●
M5	M5#Thread(with rotation-stop)			●	●
CX	Mix push-in fitting (*12)			●	●
C3N	ø1/8" push-in fitting lateral			●	●
C4N	ø5/32" push-in fitting lateral			●	●
CL3N	ø1/8" push-in fitting Up			●	●
CL4N	ø5/32" push-in fitting Up			●	●
CXN	Mix push-in fitting (*12)			●	●
D Adjustment function					
Blank	Without regulator block			●	
R	Regulator block equipped manifold (*2)(*3)			●	
E Manual override					
Blank	Locking/non-locking common (with manual cover)			●	●
M	Manual override for non-locking (with manual cover)			●	●
F Wiring method					
Refer to the following page for the wiring method.				●	
G Terminal/connector pin array					
Blank	Standard wiring			●	●
W	Double wiring (*4))(*5)			●	●
H Option					
Blank	No			●	●
E	Low exoergic/energy circuit type (*6)			●	●
U	Built-in individual power supply function (AUX) type (*6)(*7)			●	●
A	Ozone-proof product			●	●
F	Port A/B filter integrated (*8)			●	●
I Station No.					(*11)
1	1 stations			●	
to	to				
24	24 stations (*9)				
J Voltage					
3	24 VDC			●	●
4	12 VDC			●	●

・For model No. of the cable with D-sub-connector, refer to page 935.

Precautions for model No. selection

*1: The two 3-port valves integrated type cannot be used with the external pilot. Consult with CKD for other working conditions.

*2: The two 3-port valves integrated resets the main valve with the main pressure, so if there is a difference between the pilot pressure and main pressure, the response time may be delayed.

*3: Check that the main pressure supplied to the valve block with two 3-port valves integrated is not higher than the pilot pressure, and that the main pressure does not drop below 0.2MPa.

***4: Check the connector pin array (example) given on pages 934 to 941 for the double wiring specifications.**
When ordering individual valve blocks, the double wiring designation is limited to the 4-position single solenoid for the 2-port valve and to the 3-position single solenoid for the 2-port valve.

*5: Double wiring is not available for discrete individual wiring valve block.

*6: Energizing is limited to the plus common. Also, "E" and "U" cannot be selected together.

*7: Individual wiring,"U"cannot be selected together.

*8: A filter (for preventing entry of foreign matter) is incorporated in the supply and exhaust block's port P.

***9: Differs depending on the specifications. Refer to page 896.**

***10: For specifications of the self-reset, refer to the precautions on page 959.**
To include a dummy block, select mix manifold.

*11: A dummy block is counted in the station No.

*12: Inch fittings cannot be mixed with metric fittings and M5 female threads.

[Wiring method list]

Code	Description		Type: Block manifolds	Type: Discrete valve block
			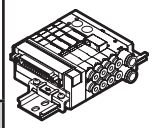	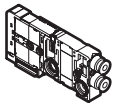
Ⓕ Wiring method				
T30(N)	25-pin D-sub-connector Left-sided spec.		●	
T30(N)R	25-pin D-sub-connector Right-sided spec.		●	
T50	20-pin flat cable connector Left-sided spec. (with power supply terminal) (*13)		●	
T50R	20-pin flat cable connector Right-sided spec. (with power supply terminal) (*13)		●	
T51	20-pin flat cable connector Left-sided spec.		●	
T51R	20-pin flat cable connector Right-sided spec.		●	
T52	10-pin flat cable connector Left-sided spec.		●	
T52R	10-pin flat cable connector Right-sided spec.		●	
T53	26-pin flat cable connector Left-sided spec.		●	
T53R	26-pin flat cable connector Right-sided spec.		●	
TM1A	Intermediate wiring block RITS connector 6P×2 pieces (*14)		●	
TM1C	Intermediate wiring block RITS connector 6P (*14)		●	
TM52	Intermediate wiring block 10-pin flat cable connector		●	
TX	Wiring block mix(*15) (*16) (*17)		●	
Blank	Valve block for reduced wiring			●
D2	Individual wiring	D-connector 300 mm	●	●
D20	Individual wiring	D-connector 500 mm	●	●
D21	Individual wiring	D-connector 1000 mm	●	●
D22	Individual wiring	D-connector 2000 mm	●	●
D23	Individual wiring	D-connector 3000 mm	●	●
D2N	Individual wiring	D-connector without socket	●	●
D3	Individual wiring	D-connector with socket/terminal	●	●

*13: T50 and T50R with power supply terminal can be combined only with T50R and T50 respectively.
*14: RITS connector 6P (1473562-6) Tyco Electronics Japan G.K.
*15: Request 2 pcs in the manifold specifications sheet. Contact CKD for 3 pcs. or more.
*16: Individual wiring is not available for the TX wiring method.
*17: For the TX wiring method, the max. station No. is 24.
* Individual wiring: Individual wiring specification is available with valve blocks designated for it.

Ozone-proof specifications

Select option “A” for Item Ⓗ in How to order on pages 898 and 902.

Clean-room specifications (Catalog No. CB-033SA)

● Anti-dust generation structure for use in cleanrooms

** -Voltage- **P70**

CE marking specifications

** - Voltage - **ST**

・ Standard voltage of 24 VDC or less is CE marking-compatible even if the model No. is not indicated with "ST".

Manifold components explanation and parts list

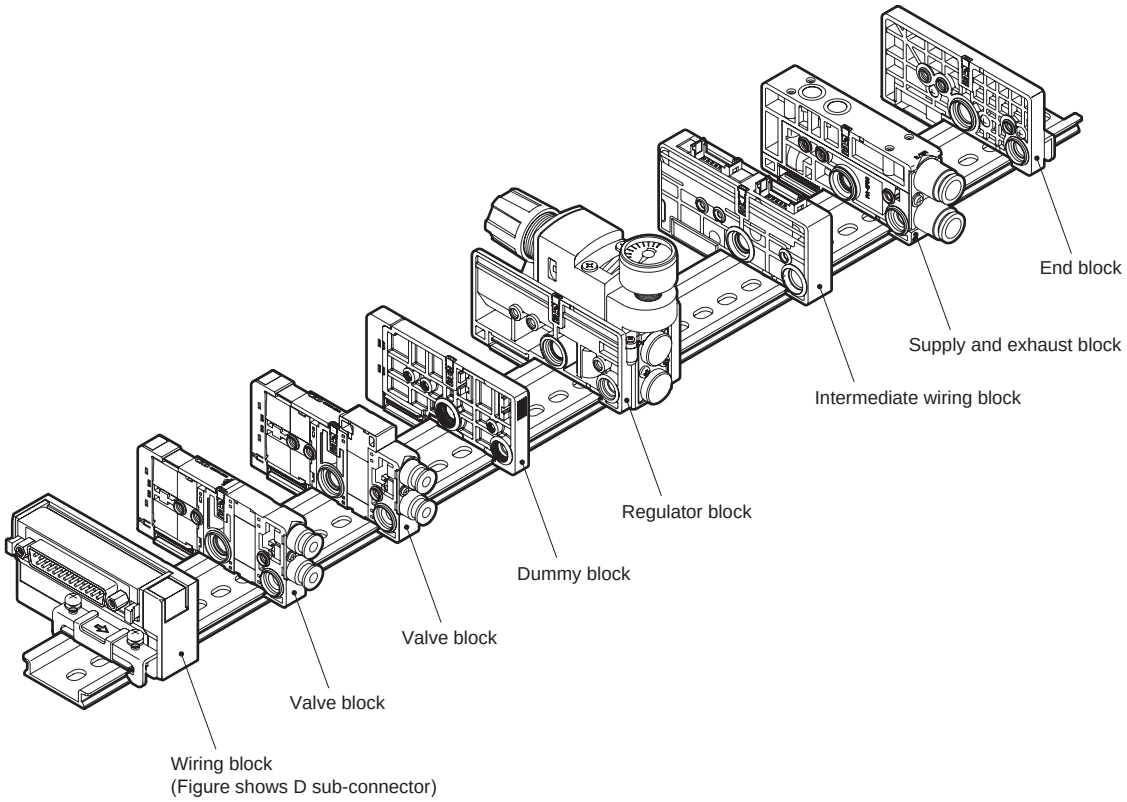

Example of main component model No. (Refer to pages 922 to 932 for details)

Part name	Model No. (example)	Part name	Model No. (example)
Wiring block	N4E0-T30	Regulator block	N4E0-RA-RL
Valve block	N4E020-C4-3	Intermediate wiring block	N4E0-TM1A
	N4E030-C4-3	Supply and exhaust block	N4E0-Q-8
Dummy block	N4E0-MPD	End block	N4E0-ER

Related parts list

Part name	Model No. (example)	Part name	Model No. (example)
Cartridge push-in fitting and related parts	N4E0-JOINT-C18	Cartridge push-in fitting and related parts	N4E0-JOINT-CF
	N4E0-JOINT-C4		N4E0-JOINT-CPG
	N4E0-JOINT-C6		
	N4E0-JOINT-CL18		
	N4E0-JOINT-CL4		
	N4E0-JOINT-CL6		
	N4E0-JOINT-C3N		
	N4E0-JOINT-C4N		
	N4E0-JOINT-CL3N		
	N4E0-JOINT-CL4N		

MEMO

How to order manifold Serial transmission

* Refer to page 898 for the D-sub-connector/flat cable connector.

● Discrete valve block

N 3 E0 66 0- C4 —— M D2 ( ) F —— 3

● Block manifolds

M N 4 E0 1 0- C4 - R - M T6G1 D2 W F - 5 - 3

- N: DIN rail Mounting method
- 4: A Valve type
- 1: B Solenoid position
- C4: C Port size
- R: D Adjustment function
- M: E Manual override
- T6G1: F Wiring connection method (serial transmission)
- D2: G Terminal/Connector pin array
- W: Individual wiring
- F: H Option
- 5: I Station No.
- 3: J Voltage

* Be sure to fill in the "Manifold specifications sheet" (page 957).

Code	Description	Type: Block manifolds	Type: Discrete valve block
A Valve type			
3	3-port valve or two 3-port valves integrated	●	●
4	4-port valve or 3, 4-port valve mix	●	●
B Solenoid position (*10)			
1	3-port valve: Single NC self-reset (Differential pressure spring return)	●	●
11	3-port valve: Single NO self-reset (Differential pressure spring return)	●	●
2	3-port valve: Double NC self-hold	●	●
21	3-port valve: Double NO self-hold	●	●
66	Two 3-port valves integrated (*1): A side valve: NC self-reset B (Differential pressure return)	●	●
66S	Two 3-port valves integrated (*1): side valve: NC self-reset (Differential pressure spring return)	●	●
67	Two 3-port valves integrated (*1): A side valve: NC self-reset B (Differential pressure return)	●	●
67S	Two 3-port valves integrated (*1): side valve: NO self-reset (Differential pressure spring return)	●	●
76	Two 3-port valves integrated (*1): A side valve: NO self-reset B (Differential pressure return)	●	●
76S	Two 3-port valves integrated (*1): side valve: NC self-reset (Differential pressure spring return)	●	●
77	Two 3-port valves integrated (*1): A side valve: NO self-reset B (Differential pressure return)	●	●
77S	Two 3-port valves integrated (*1): side valve: NO self-reset (Differential pressure spring return)	●	●
1	4-port valve: 2-position single self-reset (Differential pressure spring return)	●	●
2	4-port valve: 2-position double self-hold	●	●
3	4-port valve: 3-position all ports closed	●	●
4	4-port valve: 3-position A/B/R connection	●	●
5	4-port valve: 3-position P/A/B connection	●	●
8	Mix manifold	●	
C Port size			
CF	ø1.8 barbed fitting (compatible tube UP-9102-**)	●	●
C18	ø1.8 push-in fitting lateral (compatible tube UP-9402-**)	●	●
CL18	ø1.8 push-in fitting upward (compatible tube UP-9402-**)	●	●
C4	ø4 push-in fitting lateral	●	●
CL4	ø4 push-in fitting upward	●	●
C6	ø6 push-in fitting lateral	●	●
CL6	ø6 push-in fitting upward	●	●
M5	M5#Thread(with rotation-stop)	●	●
CX	Mix push-in fitting (*12)	●	●
C3N	ø1/8" push-in fitting lateral	●	●
C4N	ø5/32" push-in fitting lateral	●	●
CL3N	ø1/8" push-in fitting upward	●	●
CL4N	ø5/32" push-in fitting upward	●	●
CXN	Mix push-in fitting (*12)	●	●
D Adjustment function			
Blank	Without regulator block	●	
R	Regulator block equipped manifold (*2) (*3)	●	
E Manual override			
Blank	Locking/non-locking common (with manual cover)	●	●
M	Manual override for non-locking (with manual cover)	●	●
F Wiring method			
Refer to the following page for the wiring method.		●	
G Terminal/connector pin array			
Blank	Standard wiring	●	●
W	Double wiring (*4)(*5)	●	●
H Option			
Blank	No	●	●
E	Low exoergic/energy circuit type (*6)	●	●
U	Built-in individual power supply function (AUX) type (*6)(*7)	●	●
A	Ozone-proof product	●	●
F	Port A/B filter integrated (*8)	●	●
I Station No.			(*11)
1	1 stations	●	
to	to		
32	32 stations (*9)		
J Voltage			
3	24 VDC	●	●

Precautions for model No. selection

*1: The two 3-port valves integrated type cannot be used with the external pilot. Consult with CKD for other working conditions.

*2: The two 3-port valves integrated type resets the main valve with the main pressure, so if there is a difference between the pilot pressure and main pressure, the response time may be delayed.

*3: Check that the main pressure supplied to the valve block with two 3-port valves integrated is not higher than the pilot pressure, and that the main pressure does not drop below 0.2 MPa.

***4: Check the connector pin array (example) given on pages 944 to 948 for the double wiring specifications.** When ordering individual valve blocks, the double wiring designation is limited to the 4-position single solenoid for the 2-port valve and to the 3-position single solenoid for the 2-port valve.

*5: Double wiring is not available for discrete individual wiring valve blocks.

*6: Energizing is limited to the plus common. Also, "E" and "U" cannot be selected together.

*7: "U" is not available for individual wiring.

*8: A filter (for preventing entry of foreign matter) is incorporated in the supply and exhaust block's port P.

***9: Differs depending on the specifications. Refer to page 896.**

***10: For specifications of the self-reset, refer to the precautions on page 959.** When including dummy blocks,Select a mix manifold.

*11: A dummy block is counted in the station No.

*12: Inch fittings cannot be mixed with metric fittings and M5 female threads.

[Wiring method list]

Code	Description	Type: Block manifolds	Type: Discrete valve block
		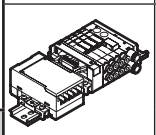	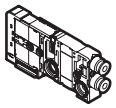
Ⓕ Wiring method			
T6G1	CC-Link 16 points	●	
T7D1	Close contact type DeviceNet 16 points	●	
T7D2	Close contact type DeviceNet 32 points	●	
T7G1	Close contact type CC-Link 16 points	●	
T7G2	Close contact type CC-Link 32 points	●	
T7N1	Close contact type S-LINK V 16 points	●	
T7N2	Close contact type S-LINK V 32 points	●	
T7EC1	Close contact EtherCAT 16 points (port side leadout)	●	
T7EC2	Close contact EtherCAT 32 points (port side leadout)	●	
T7ECT1	Close contact EtherCAT 16 points (wiring side leadout)	●	
T7ECT2	Close contact EtherCAT 32 points (wiring side leadout)	●	
Blank	Valve block for reduced wiring		●
D2	Individual wiring: D-connector Lead wire length 300 mm	●	●
D20	Individual wiring: D-connector Lead wire length 500 mm	●	●
D21	Individual wiring: D-connector Lead wire length 1000 mm	●	●
D22	Individual wiring: D-connector Lead wire length 2000 mm	●	●
D23	Individual wiring: D-connector Lead wire length 3000 mm	●	●
D2N	Individual wiring: D-connector without lead wire without socket	●	●
D3	Individual wiring: D-connector without lead wire with socket/terminal	●	●

Ozone-proof specifications

Select option “A” for Item Ⓗ in How to order on pages 898 and 902.

Clean-room specifications (Catalog No. CB-033SA)

● Anti-dust generation structure for use in cleanrooms

** -Voltage - **P70**

CE marking specifications

** - Voltage - **ST**

- Standard voltage of 24 VDC or less is CE marking-compatible even if the model No. is not indicated with "ST".
- T7N1 and T7N2 are not CE marking.

Manifold components explanation and parts list

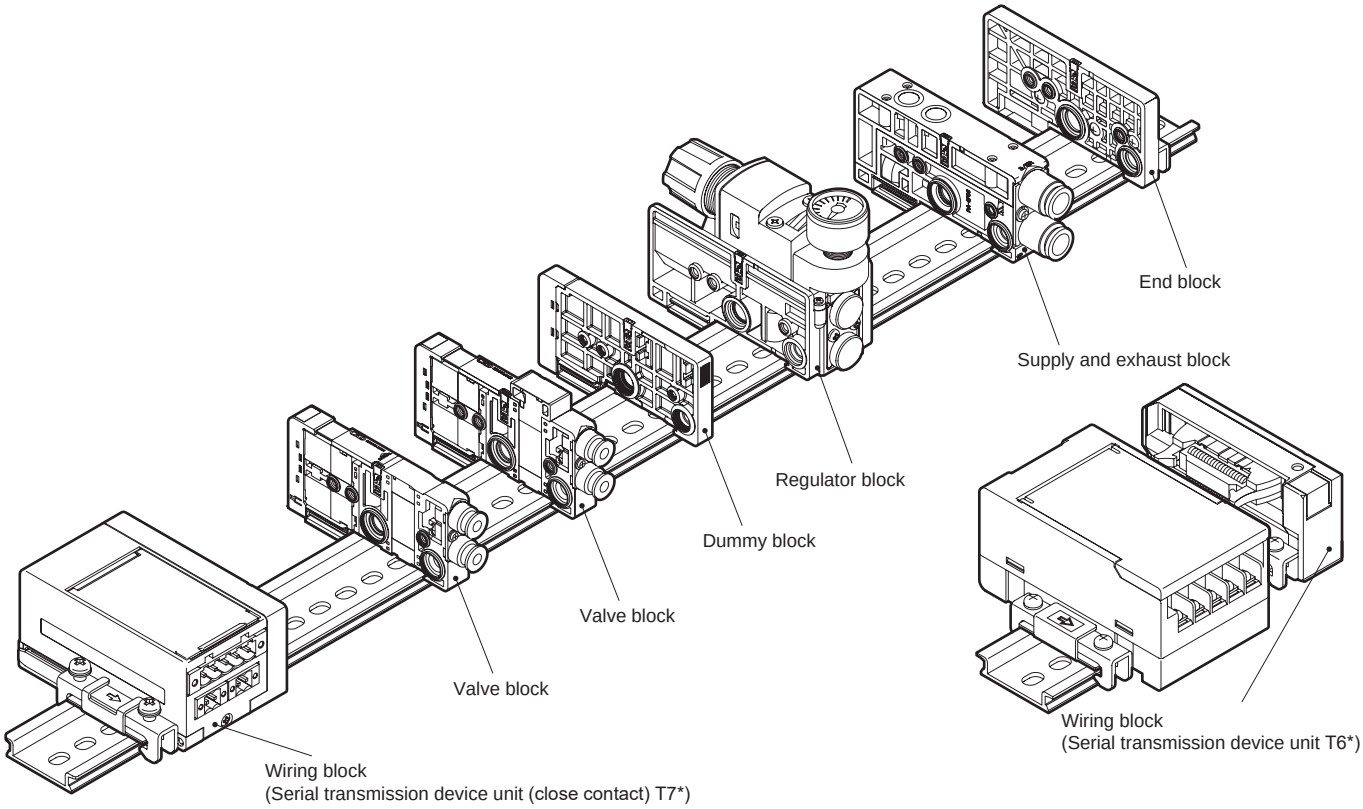

Example of main component model No. (Refer to pages 922 to 932 for details)

Part name	Model No. (example)	Part name	Model No. (example)
Wiring block	N4E0-T7G2	Regulator block	N4E0-RA-RL
Valve block	N4E020-C4-3	Supply and exhaust block	N4E0-Q-8
	N4E030-C4-3	End block	N4E0-ER
Dummy block	N4E0-MPD		

Related parts list

Part name	Model No. (example)	Part name	Model No. (example)
Cartridge push-in fitting and related parts	N4E0-JOINT-C18	Cartridge push-in fitting and related parts	N4E0-JOINT-CF
	N4E0-JOINT-C4		N4E0-JOINT-CPG
	N4E0-JOINT-C6		
	N4E0-JOINT-CL18		
	N4E0-JOINT-CL4		
	N4E0-JOINT-CL6		
	N4E0-JOINT-C3N		
	N4E0-JOINT-C4N		
	N4E0-JOINT-CL3N		
	N4E0-JOINT-CL4N		

MEMO

Internal structure and parts list

3-port valve

N3E010

● 2-position single normally closed

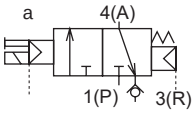

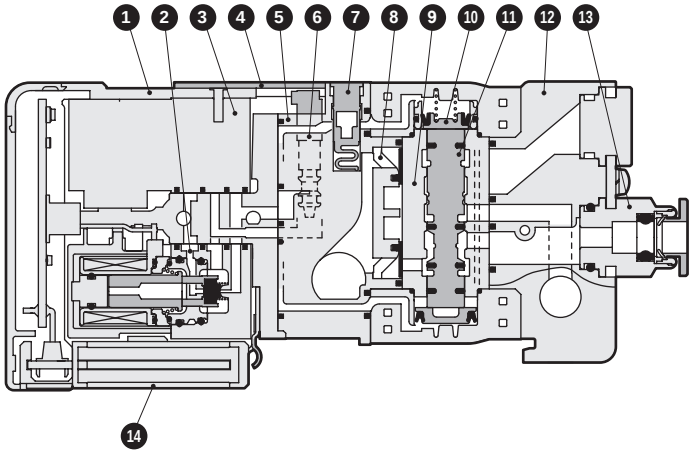

N3E0110

● 2-position single normally open

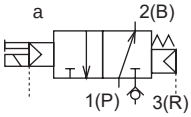

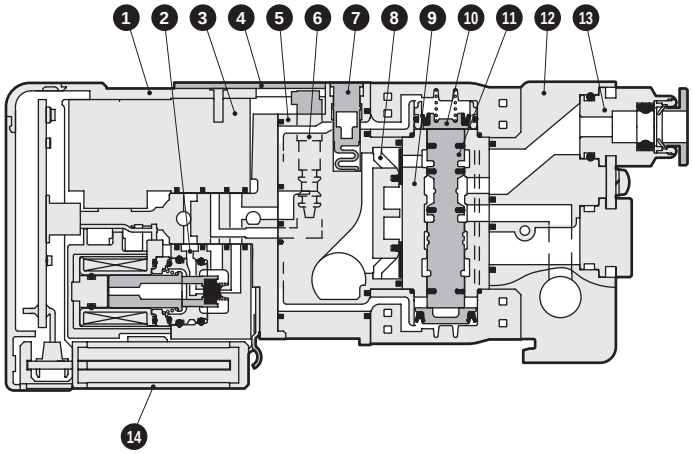

Main parts list

No.	Part name	Main material	No.	Part name	Main material
1	Wiring cover	PBT/PC	8	Check valve	PBT/TPU
2	Coil assembly	-	9	Body	Aluminum
3	Coil dummy	PPS	10	Piston chamber assembly	-
4	Manual cover	PBT	11	Spool assembly	Aluminum
5	Pilot block	PPS/PA	12	Port block	PA
6	Manual override	POM	13	Cartridge push-in fitting	-
7	Connection key	POM	14	Wiring connector assembly	LCP

Internal structure and parts list

N3E020

● 2-position double normally closed (self-hold)

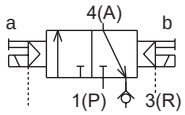

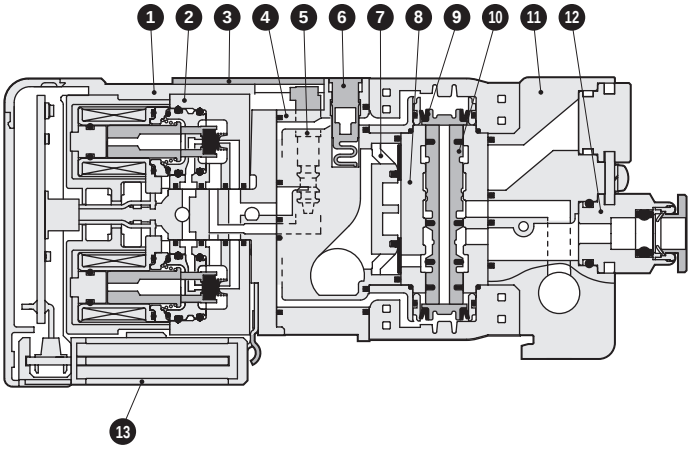

N3E0210

● 2-position double normally open (self-hold)

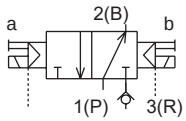

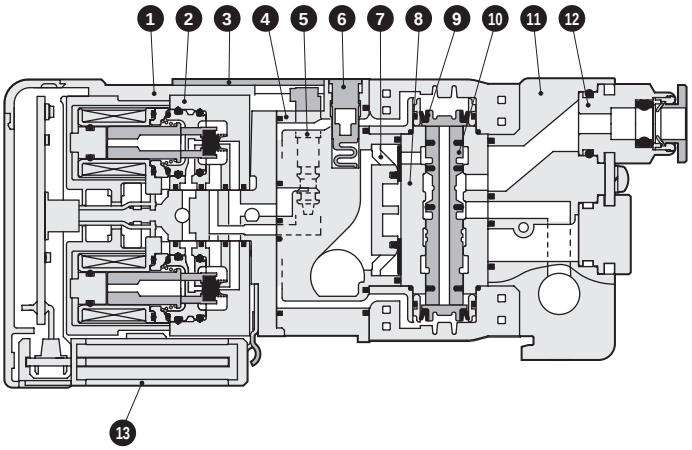

Main parts list

No.	Part name	Main material	No.	Part name	Main material
1	Wiring cover	PBT/PC	8	Body	Aluminum
2	Coil assembly	-	9	Piston chamber assembly	-
3	Manual cover	PBT	10	Spool assembly	Aluminum
4	Pilot block	PPS/PA	11	Port block	PA
5	Manual override	POM	12	Cartridge push-in fitting	-
6	Connection key	POM	13	Wiring connector assembly	LCP
7	Check valve	PBT/TPU			

Internal structure and parts list

Two 3-port valves integrated

N3E0660

● NC/NC self-reset (differential pressure return)

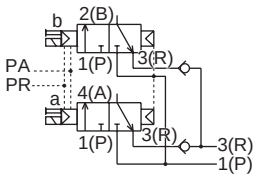

B side NC

A side NC

N3E0670

● NC/NO self-reset (differential pressure return)

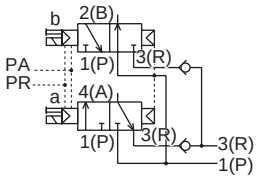

B side NO

A side NC

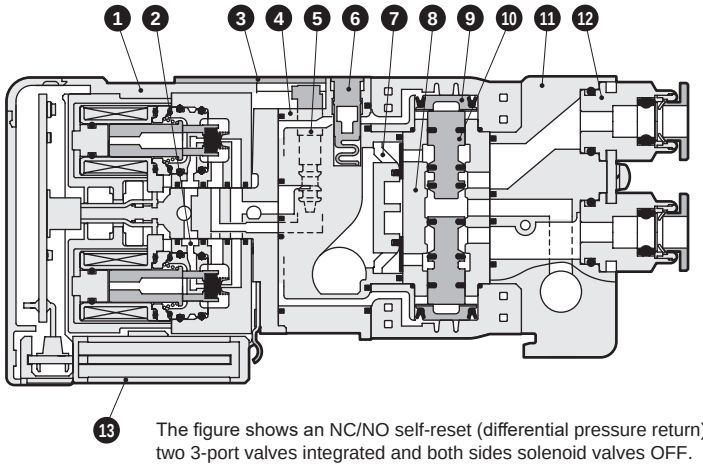

The figure shows an NC/NO self-reset (differential pressure return) with two 3-port valves integrated and both sides solenoid valves OFF.

N3E0760

● NO/NC self-reset (differential pressure return)

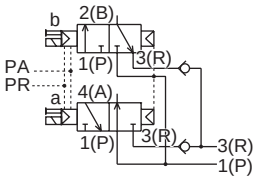

B side NC

A side NO

N3E0770

● NO/NO self-reset (differential pressure return)

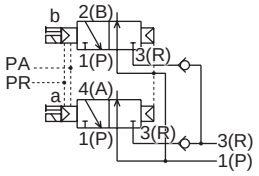

B side NO

A side NO

Main parts list

No.	Part name	Main material	No.	Part name	Main material
1	Wiring cover	PBT/PC	8	Body	Aluminum
2	Coil assembly	-	9	Piston chamber assembly	-
3	Manual cover	PBT	10	Spool assembly	Aluminum
4	Pilot block	PPS/PA	11	Port block	PA
5	Manual override	POM	12	Cartridge push-in fitting	-
6	Connection key	POM	13	Wiring connector assembly	LCP
7	Check valve	PBT/TPU			

Internal structure and parts list

N3E066S0

● NC/NC self-reset (differential pressure spring return)

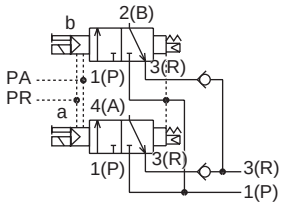

N3E067S0

● NC/NO self-reset (differential pressure spring return)

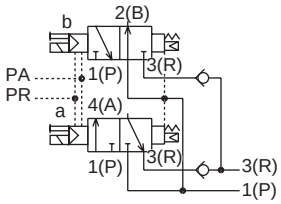

N3E076S0

● NO/NC self-reset (differential pressure spring return)

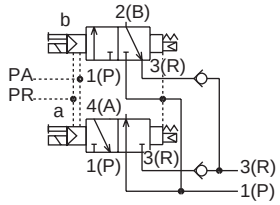

N3E077S0

● NO/NO self-reset (differential pressure spring return)

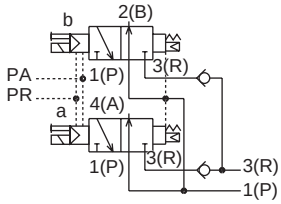

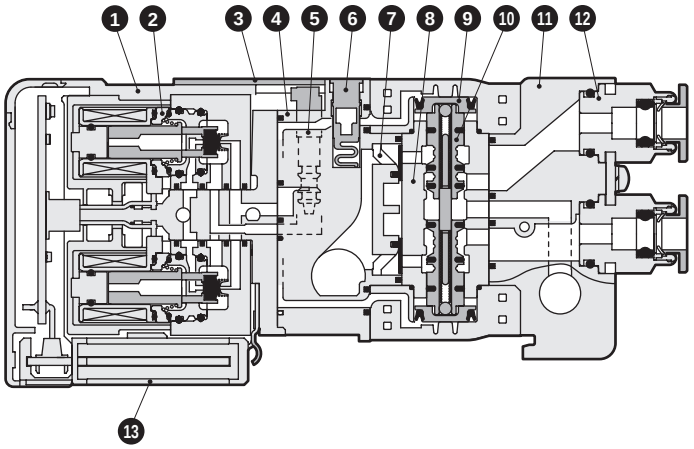

The figure shows an NC/NO self-reset (differential pressure spring return) with two 3-port valves integrated and both sides solenoid valves OFF.

Main parts list

No.	Part name	Main material	No.	Part name	Main material
1	Wiring cover	PBT/PC	8	Body	Aluminum
2	Coil assembly	-	9	Piston chamber assembly	-
3	Manual cover	PBT	10	Spool assembly	Aluminum
4	Pilot block	PPS/PA	11	Port block	PA
5	Manual override	POM	12	Cartridge push-in fitting	-
6	Connection key	POM	13	Wiring connector assembly	LCP
7	Check valve	PBT/TPU			

Internal structure and parts list

4-port valve

N4E010

● 2-position single self-reset (differential pressure spring return)

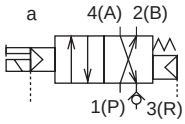

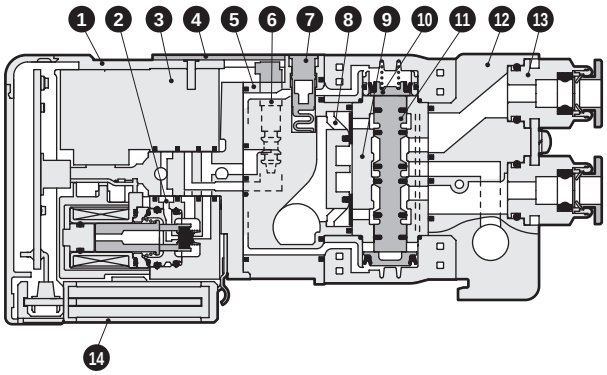

N4E020

● 2-position double self-hold

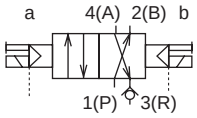

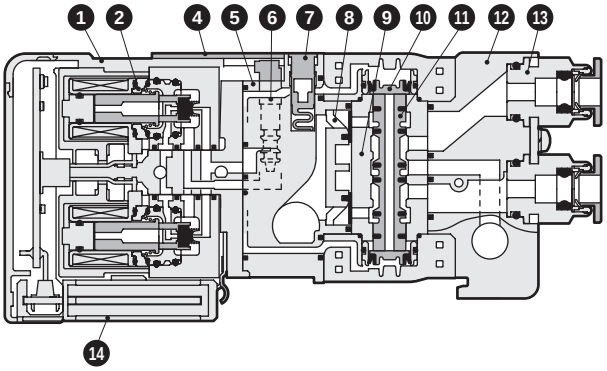

N4E030

● 3-position all ports closed

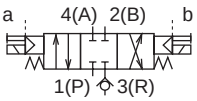

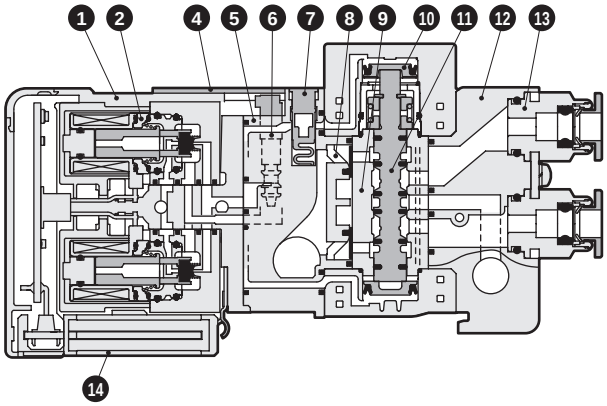

N4E040

● 3-position A/B/R connection

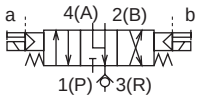

N4E050

● 3-position P/A/B connection

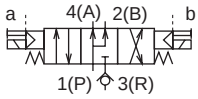

Main parts list

No.	Part name	Main material	No.	Part name	Main material
1	Wiring cover	PBT/PC	8	Check valve	PBT/TPU
2	Coil assembly	PPS/POM/PBT	9	Body	Aluminum
3	Coil dummy	PPS	10	Piston chamber assembly	PPS/POM
4	Manual cover	PBT	11	Spool assembly	Aluminum
5	Pilot block	PPS/PA	12	Port block	PA
6	Manual override	POM	13	Cartridge push-in fitting	-
7	Connection key	POM	14	Wiring connector assembly	LCP

Internal structure and parts list

Supply and exhaust block

N4E0-Q

● For internal pilot

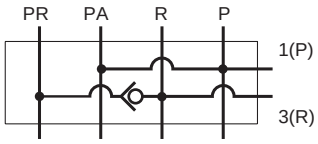

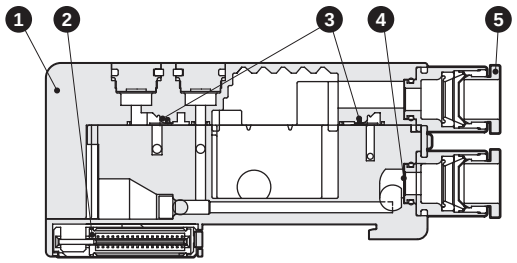

N4E0-QK

● For external pilot

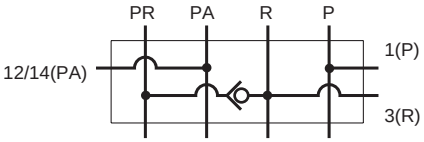

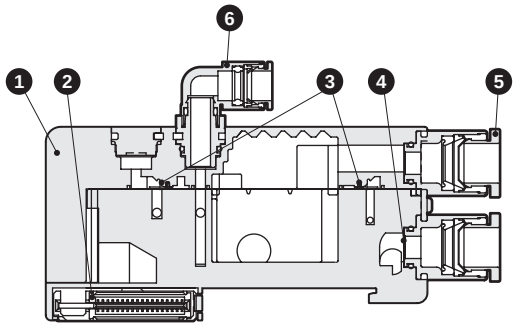

N4E0-QZ

● For multi-pressure circuit

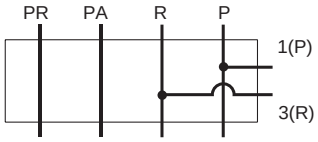

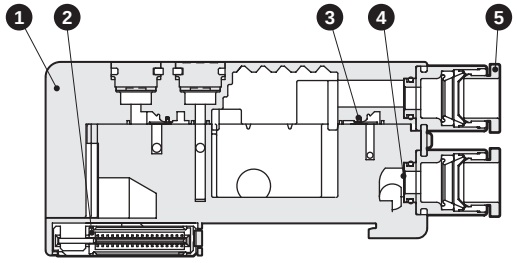

N4E0-QKZ

● PA/PR separated for external pilot

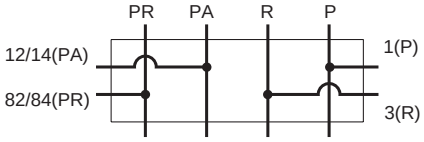

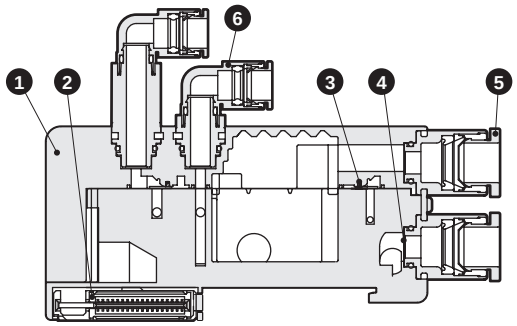

Main parts list

No.	Part name	Main material
1	Supply and exhaust block	PA
2	Wiring connector assembly	LCP
3	Check valve	TPU
4	Air supply filter	SUS
5	Cartridge push-in fitting (main piping section)	-
6	Cartridge push-in fitting (external pilot piping section)	-

Internal structure and parts list

Supply and exhaust block

N4E0-QX

● Atmosphere release for internal pilot

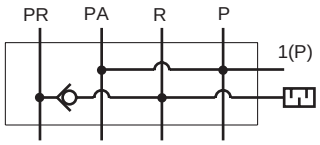

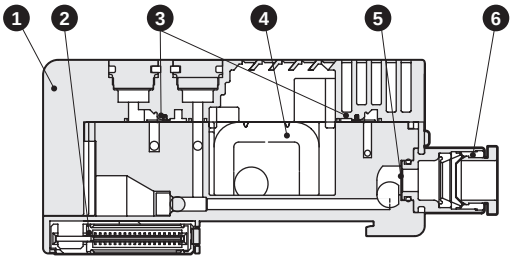

N4E0-QKX

● Atmosphere release for external pilot

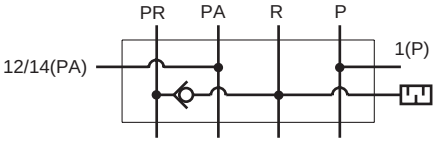

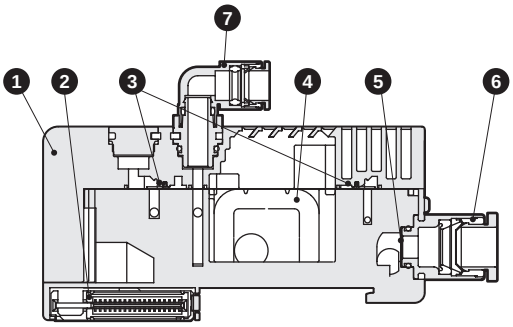

Main parts list

No.	Part name	Main material
1	Supply and exhaust block	PA
2	Wiring connector assembly	LCP
3	Check valve	TPU
4	Exhaust filter	-
5	Air supply filter	SUS
6	Cartridge push-in fitting (main piping section)	-
7	Cartridge push-in fitting (external pilot piping section)	-

Dimensions

MN 3/4 E0*-*-T30(N)*-*-*

● D-sub-connector left side (T30(N))

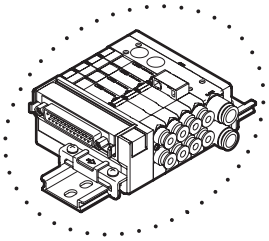

* D-sub-connector projection can be switched between upward and downward directions.
* For how to switch the connector direction, refer to page 919.

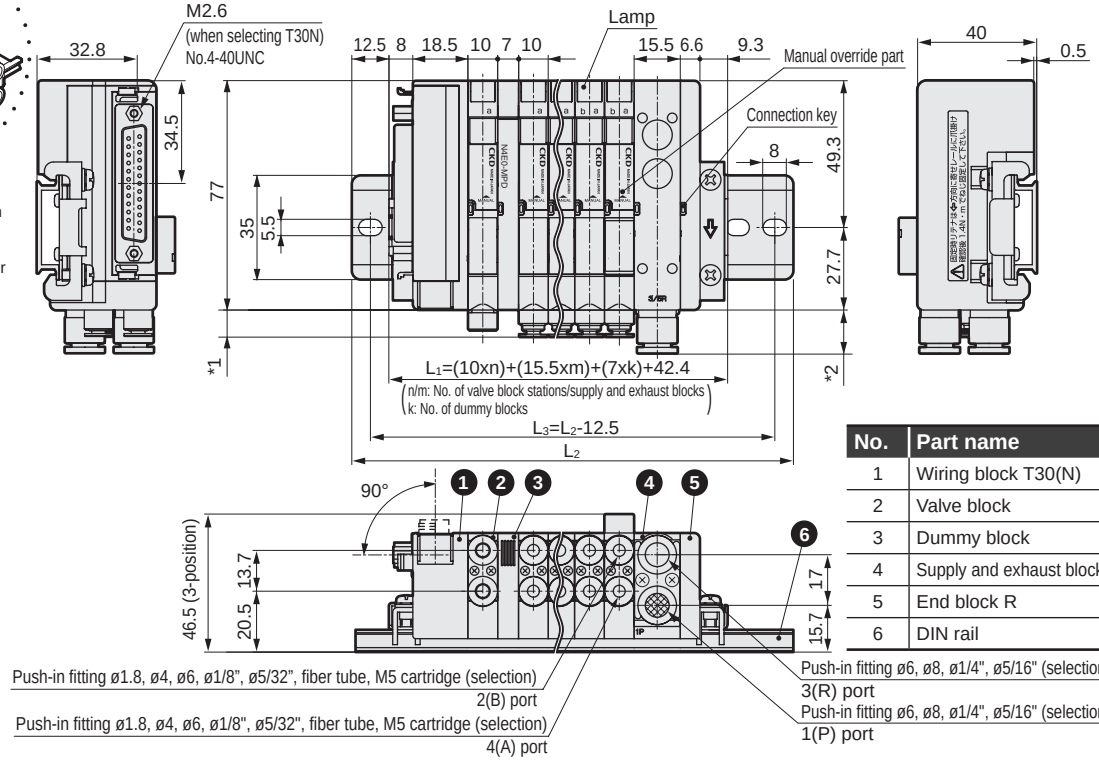

*1: Valve block fitting dimensions		
Push-in fitting	ø1.8	5.5
	ø4	9.5
	ø6	10.7
	ø1/8"	10.0
	ø5/32"	9.6
Fiber tube		8.5
M5 female thread		6.9

*2: Supply/exhaust block fit. dim.	
ø6	14
ø8	14.8
ø1/4"	15.1
ø5/16"	15.3

No.	Part name
1	Wiring block T30(N)
2	Valve block
3	Dummy block
4	Supply and exhaust block
5	End block R
6	DIN rail

* For dimensions of the push-in L fittings (upward) for valve block and for supply and exhaust block, and of the valve block with individual power supply function (AUX), refer to page 919.

MN 3/4 E0*-*-T30(N)R*-*-*

● D-sub-connector right side (T30(N)R)

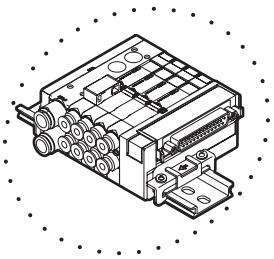

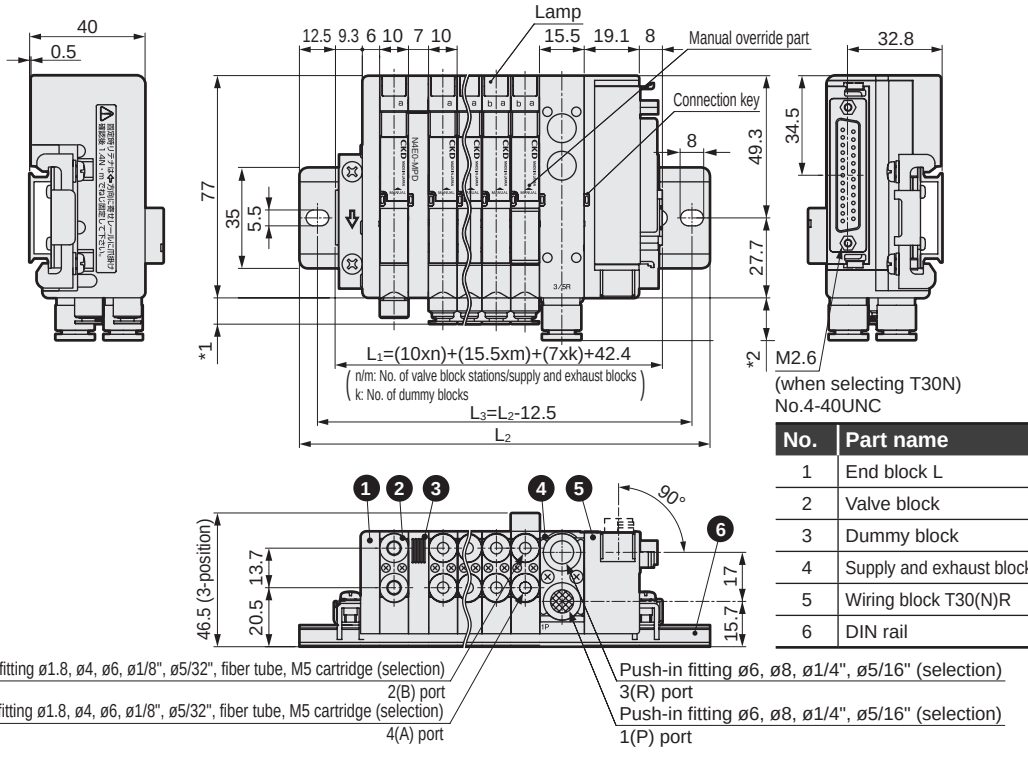

*1: Valve block fitting dimensions		
Push-in fitting	ø1.8	5.5
	ø4	9.5
	ø6	10.7
	ø1/8"	10.0
	ø5/32"	9.6
Fiber tube		8.5
M5 female thread		6.9

*2: Supply/exhaust block fit. dim.	
ø6	14
ø8	14.8
ø1/4"	15.1
ø5/16"	15.3

No.	Part name
1	End block L
2	Valve block
3	Dummy block
4	Supply and exhaust block
5	Wiring block T30(N)R
6	DIN rail

Manifold length L1 mm	76.2 or less	88.7 or less	101.2 or less	113.7 or less	126.2 or less	138.7 or less	151.2 or less	163.7 or less	176.2 or less	188.7 or less	201.2 or less	213.7 or less	226.2 or less	238.7 or less	251.2 or less	263.7 or less	276.2 or less	288.7 or less	301.2 or less	313.7 or less	326.2 or less	338.7 or less	351.2 or less
Mounting rail length L2 mm	100	112.5	125	137.5	150	162.5	175	187.5	200	212.5	225	237.5	250	262.5	275	287.5	300	312.5	325	337.5	350	362.5	375
Mounting rail pitch L3 mm	87.5	100	112.5	125	137.5	150	162.5	175	187.5	200	212.5	225	237.5	250	262.5	275	287.5	300	312.5	325	337.5	350	362.5

Dimensions

MN$^{3}_{4}$E0*-*-T50*-*-*

● Flat cable connector left side type (T50)

* T51, T52 and T53 are also available. Dimensions are the same as T50. Refer to *3: Connector dimensions for dimensions of the connector.

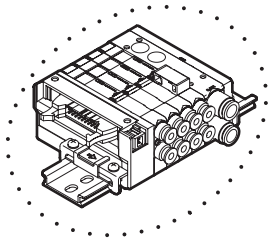

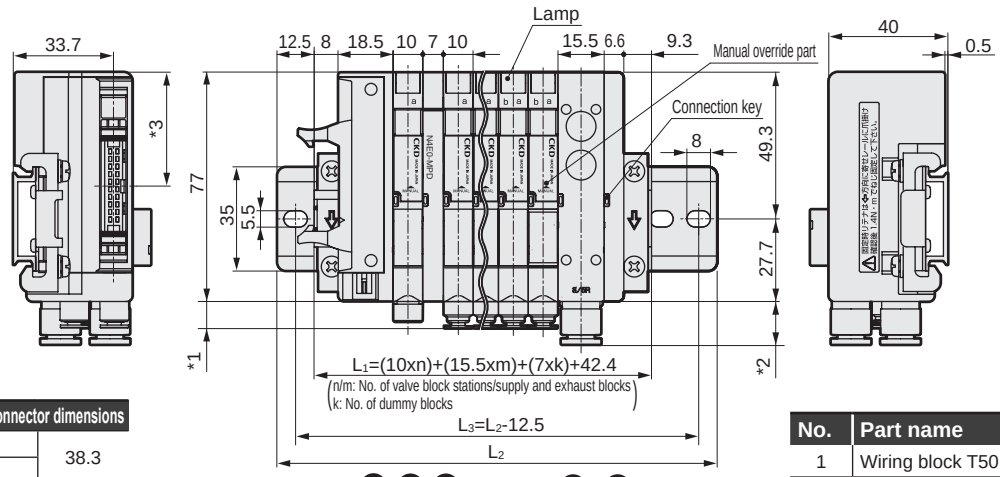

*1: Valve block fitting dimensions		
Push-in fitting	ø1.8	5.5
	ø4	9.5
	ø6	10.7
	ø1/8"	10.0
	ø5/32"	9.6
Fiber tube		8.5
M5 female thread		6.9

*2: Supply/exhaust block fit. dim.	
ø6	14
ø8	14.8
ø1/4"	15.1
ø5/16"	15.3

*3: Connector dimensions	
T50	38.3
T51	
T52	32.0
T53	34.5

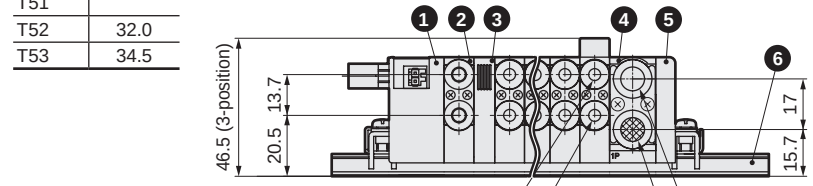

No.	Part name
1	Wiring block T50
2	Valve block
3	Dummy block
4	Supply and exhaust block
5	End block R
6	DIN rail

* For dimensions of the push-in L fittings (upward) for valve block, fiber tube fitting, and supply and exhaust block, refer to page 919.
* A power feed connector can be used with T50 to supply power to the PLC output unit. Refer to page 919 for connector dimensions, to page 936 for how to wire, and to the wiring precautions.

MN$^{3}_{4}$E0*-*-T50R*-*-*

● Flat cable connector right side type (T50R)

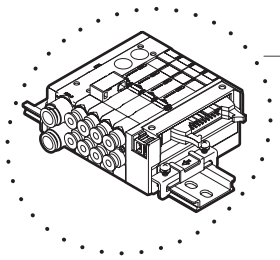

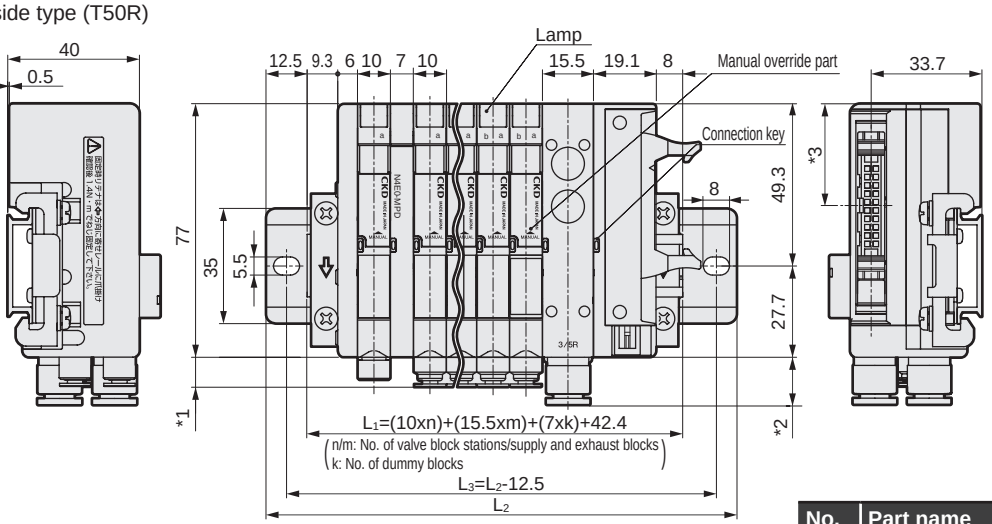

*1: Valve block fitting dimensions		
Push-in fitting	ø1.8	5.5
	ø4	9.5
	ø6	10.7
	ø1/8"	10.0
	ø5/32"	9.6
Fiber tube		8.5
M5 female thread		6.9

*2: Supply/exhaust block fit. dim.	
ø6	14
ø8	14.8
ø1/4"	15.1
ø5/16"	15.3

*3: Connector dimensions	
T50R	30.7
T51R	
T52R	37.1
T53R	34.5

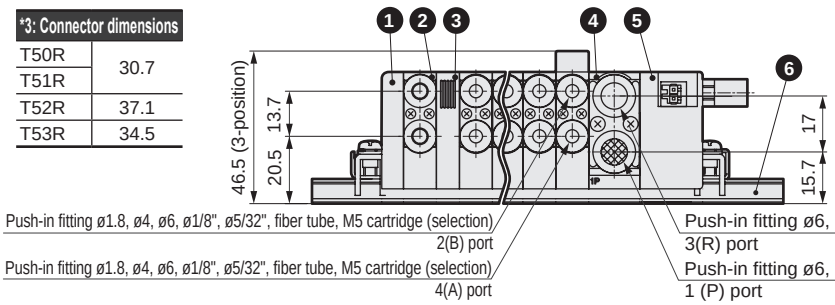

No.	Part name
1	End block L
2	Valve block
3	Dummy block
4	Supply and exhaust block
5	Wiring block T50R
6	DIN rail

Manifold length L1 mm	76.2 or less	88.7 or less	101.2 or less	113.7 or less	126.2 or less	138.7 or less	151.2 or less	163.7 or less	176.2 or less	188.7 or less	201.2 or less	213.7 or less	226.2 or less	238.7 or less	251.2 or less	263.7 or less	276.2 or less	288.7 or less	301.2 or less	313.7 or less	326.2 or less	338.7 or less	351.2 or less
Mounting rail length L2 mm	100	112.5	125	137.5	150	162.5	175	187.5	200	212.5	225	237.5	250	262.5	275	287.5	300	312.5	325	337.5	350	362.5	375
Mounting rail pitch L3 mm	87.5	100	112.5	125	137.5	150	162.5	175	187.5	200	212.5	225	237.5	250	262.5	275	287.5	300	312.5	325	337.5	350	362.5

Dimensions

MN$^{3}_{4}$E0*-*-TM1$^{A}_{C}$*-*-*

● RITS connector, intermediate wiring (TM1 $^{A}_{C}$)

MN$^{3}_{4}$E0*-*-TM52*-*-*

● 10-pin flat cable connector, intermediate wiring (TM52)

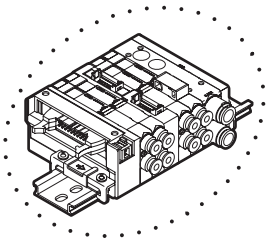

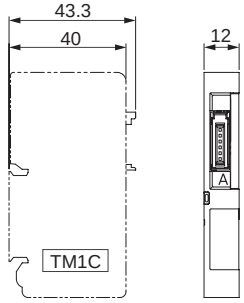

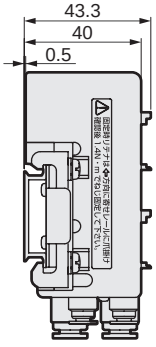

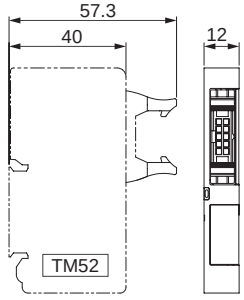

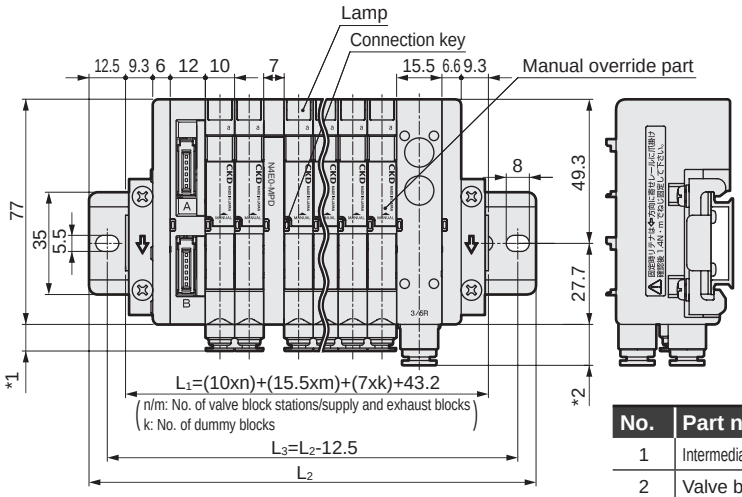

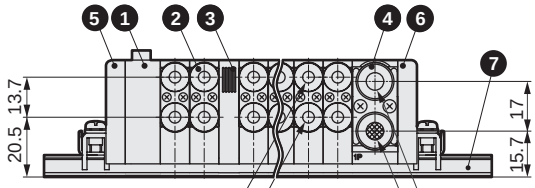

No.	Part name
1	Intermediate wiring block TM1A
2	Valve block
3	Dummy block
4	Supply and exhaust block
5	End block L
6	End block R
7	DIN rail

Push-in fitting ø1.8, ø4, ø6, ø1/8", ø5/32", fiber tube, M5 cartridge (selection)
2(B) port
Push-in fitting ø1.8, ø4, ø6, ø1/8", ø5/32", fiber tube, M5 cartridge (selection)
4(A) port

Push-in fitting ø6, ø8, ø1/4", ø5/16" (selection)
3(R) port
Push-in fitting ø6, ø8, ø1/4", ø5/16" (selection)
1(P) port

*1: Valve block fitting dimensions		
Push-in fitting	ø1.8	5.5
	ø4	9.5
	ø6	10.7
	ø1/8"	10.0
	ø5/32"	9.6
Fiber tube		8.5
M5 female thread		6.9

*2: Supply/exhaust block fit. dim.	
ø6	14
ø8	14.8
ø1/4"	15.1
ø5/16"	15.3

Manifold length L1 mm	76.2 or less	88.7 or less	101.2 or less	113.7 or less	126.2 or less	138.7 or less	151.2 or less	163.7 or less	176.2 or less	188.7 or less	201.2 or less	213.7 or less	226.2 or less	238.7 or less	251.2 or less	263.7 or less	276.2 or less	288.7 or less	301.2 or less	313.7 or less	326.2 or less	338.7 or less	351.2 or less
Mounting rail length L2 mm	100	112.5	125	137.5	150	162.5	175	187.5	200	212.5	225	237.5	250	262.5	275	287.5	300	312.5	325	337.5	350	362.5	375
Mounting rail pitch L3 mm	87.5	100	112.5	125	137.5	150	162.5	175	187.5	200	212.5	225	237.5	250	262.5	275	287.5	300	312.5	325	337.5	350	362.5

Dimensions

MN$^{3}_{4}$E0*-*-T6G1-*-*

● Serial transmission (T6G1)

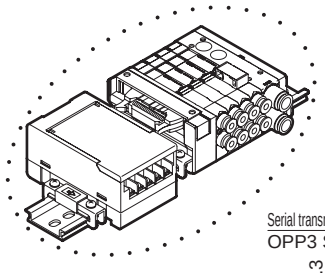

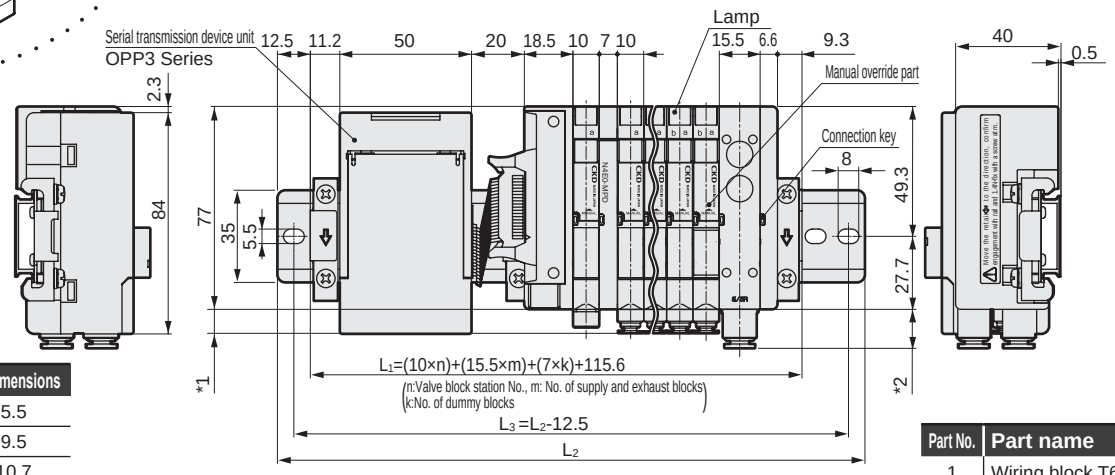

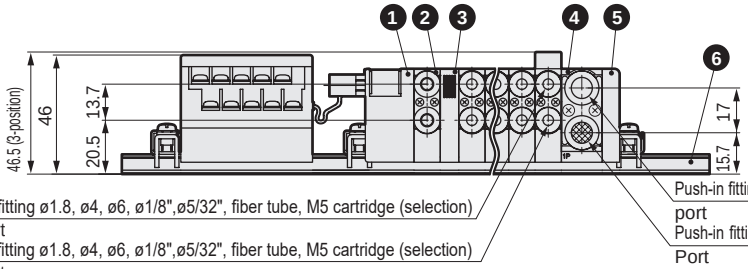

* 1 Valve block fitting dimensions		
Push-in fitting	ø1.8	5.5
	ø4	9.5
	ø6	10.7
	ø1/8"	10.0
	ø5/32"	9.6
Fiber tube		8.5
M5 female thread		6.9

*2 Supply and exhaust block fitting dimensions	
ø6	14
ø8	14.8
ø1/4"	15.1
ø5/16"	15.3

Part No.	Part name
1	Wiring block T6G1
2	Valve block
3	Dummy block
4	Supply and exhaust block
5	End block R
6	DIN rail

MN$^{3}_{4}$E0*-*-T7**-*-*

● Serial transmission (close contact type) (T7*)

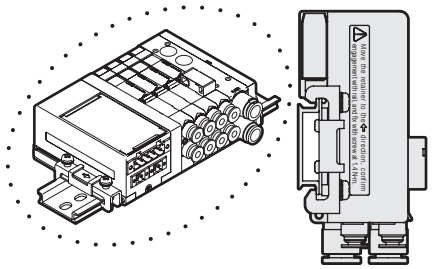

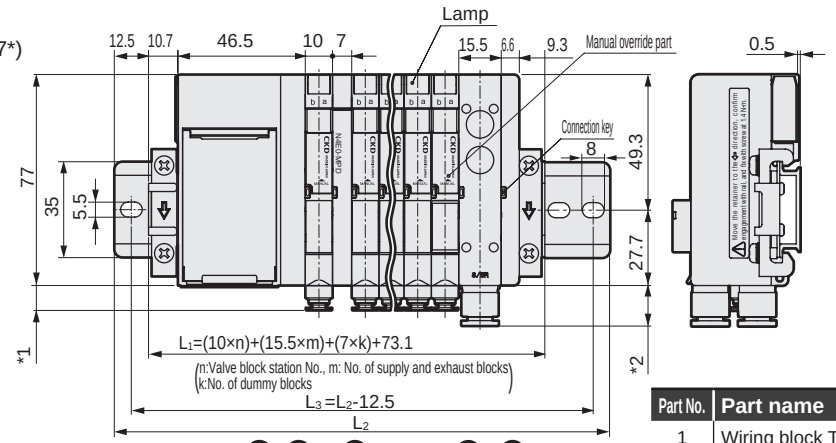

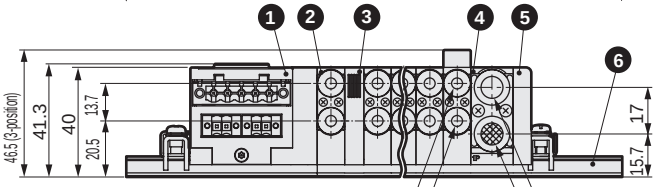

* 1 Valve block fitting dimensions		
Push-in fitting	ø1.8	5.5
	ø4	9.5
	ø6	10.7
	ø1/8"	10.0
	ø5/32"	9.6
Fiber tube		8.5
M5 female thread		6.9

*2 Supply and exhaust block fitting dimensions	
ø6	14
ø8	14.8
ø1/4"	15.1
ø5/16"	15.3

Part No.	Part name
1	Wiring block T7*
2	Valve block
3	Dummy block
4	Supply and exhaust block
5	End block R
6	DIN rail

* For Dimensions of the push-in L fittings (upward) for valve block, fiber tube fitting, and supply and exhaust block, refer to page 919.

Manifold length L1 mm	76.2 or less	88.7 or less	101.2 or less	113.7 or less	126.2 or less	138.7 or less	151.2 or less	163.7 or less	176.2 or less	188.7 or less	201.2 or less	213.7 or less	226.2 or less	238.7 or less	251.2 or less	263.7 or less	276.2 or less	288.7 or less	301.2 or less	313.7 or less	326.2 or less	338.7 or less	351.2 or less
Mounting rail length L2 mm	100	112.5	125	137.5	150	162.5	175	187.5	200	212.5	225	237.5	250	262.5	275	287.5	300	312.5	325	337.5	350	362.5	375
Mounting rail pitch L3 mm	87.5	100	112.5	125	137.5	150	162.5	175	187.5	200	212.5	225	237.5	250	262.5	275	287.5	300	312.5	325	337.5	350	362.5

Dimensions

MN$^{3}_{4}$E0*-*-T7**-*-*

● Serial transmission (T7EC**)

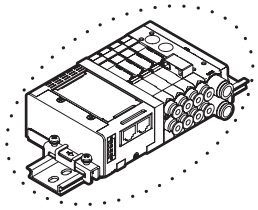

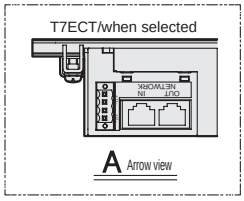

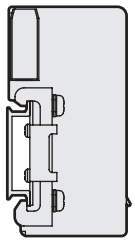

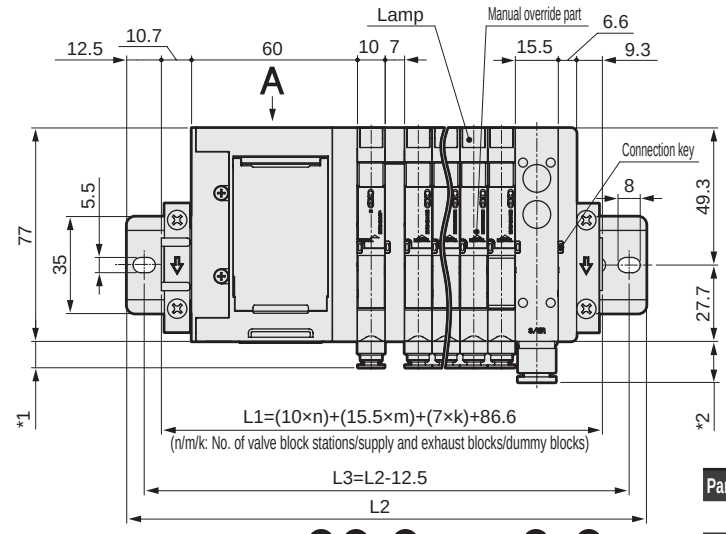

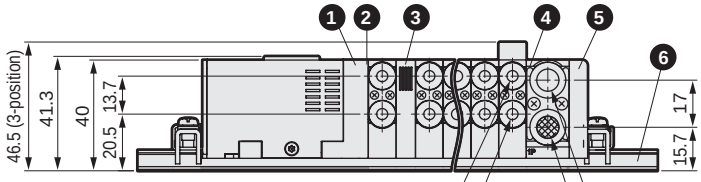

Push-in fitting ø1.8, ø4, ø6, ø1/8", ø5/32", fiber tube, M5 cartridge (selection)
2 (B) port

Push-in fitting ø1.8, ø4, ø6, ø1/8", ø5/32", fiber tube, M5 cartridge (selection)
4 (A) port

Push-in fitting ø6, ø8, ø1/4", ø5/16" (selection)
3(R) port

Push-in fitting ø6, ø8, ø1/4", ø5/16" (selection)
1 (P) port

Part No.	Part name
1	Wiring block T7*
2	Valve block
3	Dummy block
4	Supply and exhaust block
5	End block R
6	DIN rail

***1 Valve block fitting dimensions**

Push-in fitting	ø1.8	5.5
	ø4	9.5
	ø6	10.7
	ø1/8"	10.0
	ø5/32"	9.6
Fiber tube		8.5
M5 female thread		6.9

***2 Supply and exhaust block fitting dimensions**

ø6	14
ø8	14.8
ø1/4"	15.1
ø5/16"	15.3

MN$^{3}_{4}$E0*-*-(D2 to D3)-*-*

● Individual wiring connector (D2/D20/D21/D22/D23/D2N/D3)

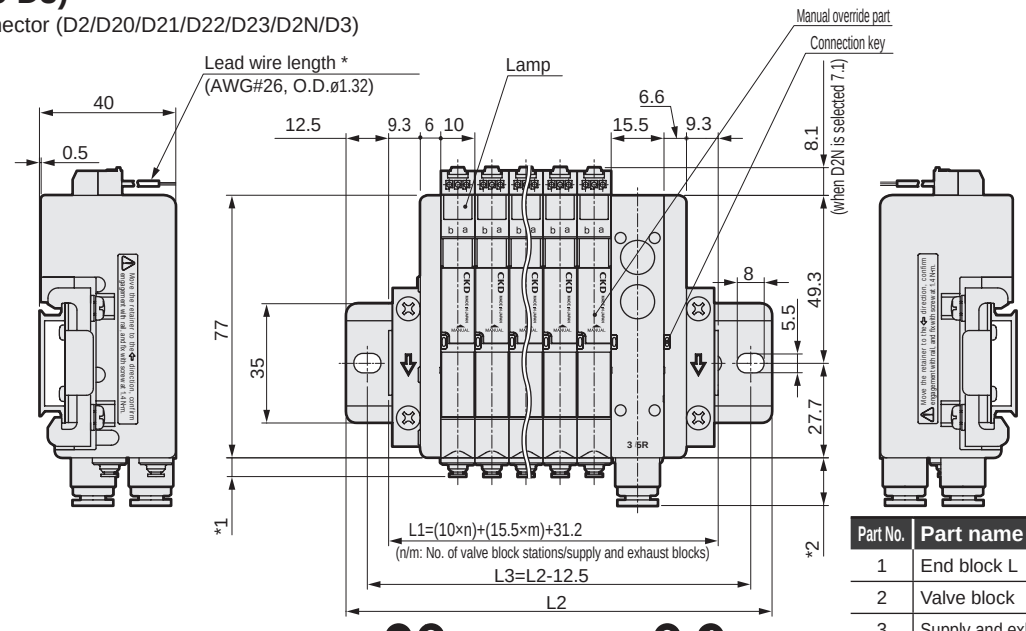

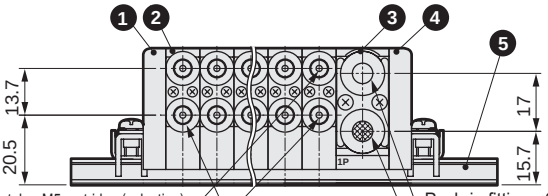

Push-in fitting ø1.8, ø4, ø6, ø1/8", ø5/32", fiber tube, M5 cartridge (selection)
2 (B) port

Push-in fitting ø1.8, ø4, ø6, ø1/8", ø5/32", fiber tube, M5 cartridge (selection)
4 (A) port

Push-in fitting ø6, ø8, ø1/4", ø5/16" (selection)
3(R) port

Push-in fitting ø6, ø8, ø1/4", ø5/16" (selection)
1 (P) port

Push-in fitting ø1.8

Part No.	Part name
1	End block L
2	Valve block
3	Supply and exhaust block
4	End block R
5	DIN rail

*** Lead wire length**

D2	300 mm
D20	500 mm
D21	1000 mm
D22	2000 mm
D23	3000 mm

***1 Valve block fitting dimensions**

Push-in fitting	ø1.8	5.5
	ø4	9.5
	ø6	10.7
	ø1/8"	10.0
	ø5/32"	9.6
Fiber tube		8.5
M5 female thread		6.9

***2 Supply and exhaust block fitting dimensions**

ø6	14
ø8	14.8
ø1/4"	15.1
ø5/16"	15.3

Manifold length L1 mm	63.7 or less	76.2 or less	88.7 or less	101.2 or less	113.7 or less	126.2 or less	138.7 or less	151.2 or less	163.7 or less	176.2 or less	188.7 or less	201.2 or less	213.7 or less	226.2 or less	238.7 or less	251.2 or less	263.7 or less	276.2 or less	288.7 or less	301.2 or less	313.7 or less	326.2 or less	338.7 or less	351.2 or less
Mounting rail length L2 mm	87.5	100	112.5	125	137.5	150	162.5	175	187.5	200	212.5	225	237.5	250	262.5	275	287.5	300	312.5	325	337.5	350	362.5	375
Mounting rail pitch L3 mm	75	87.5	100	112.5	125	137.5	150	162.5	175	187.5	200	212.5	225	237.5	250	262.5	275	287.5	300	312.5	325	337.5	350	362.5

Dimensions

● Piping blocks (common for all types)

Regulator block
MN$\frac{3}{4}$E0*0-*- R -*

● Pressure adjustment knob direction: Wiring side (RA)

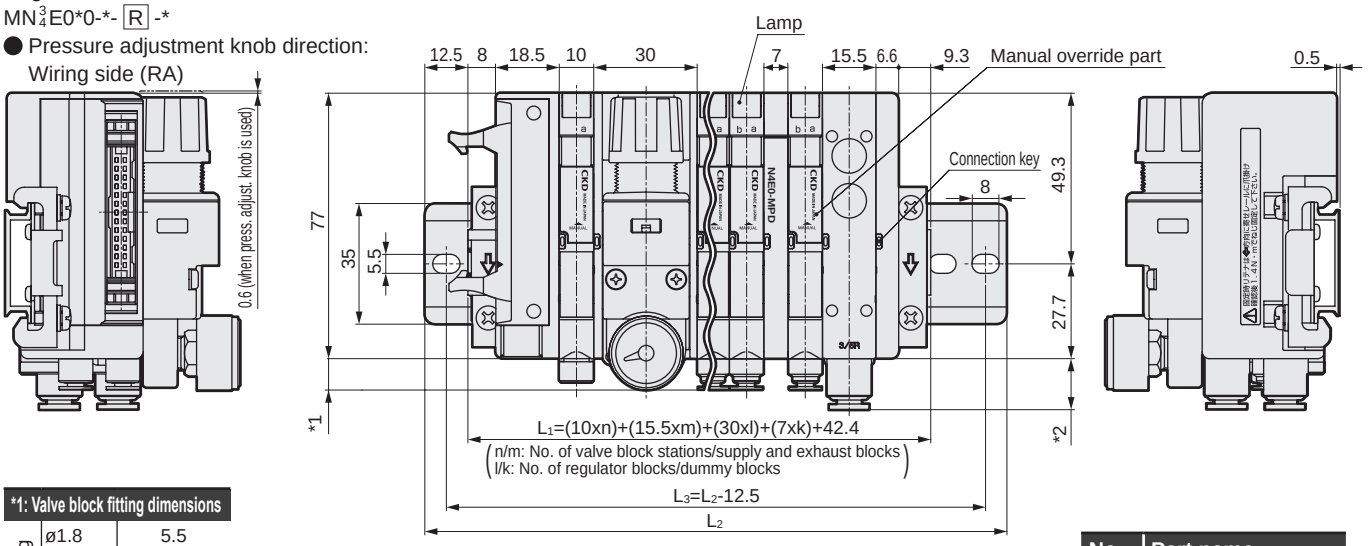

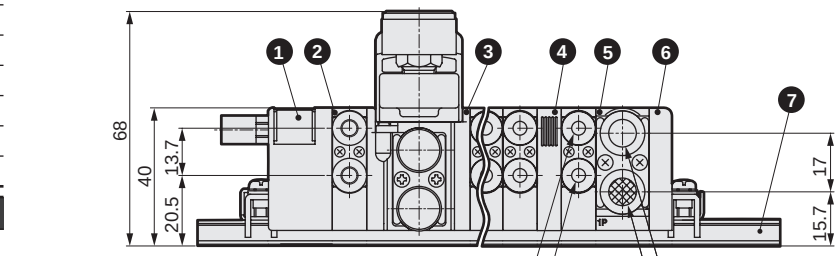

*1: Valve block fitting dimensions		
Push-in fitting	ø1.8	5.5
	ø4	9.5
	ø6	10.7
	ø1/8"	10.0
	ø5/32"	9.6
Fiber tube		8.5
M5 female thread		6.9

*2: Supply/exhaust block fit. dim.	
ø6	14
ø8	14.8
ø1/4"	15.1
ø5/16"	15.3

No.	Part name
1	Wiring block T5*
2	Valve block
3	Regulator block
4	Dummy block
5	Supply and exhaust block
6	End block R
7	DIN rail

● Pressure adjustment knob direction: Port side (RB)

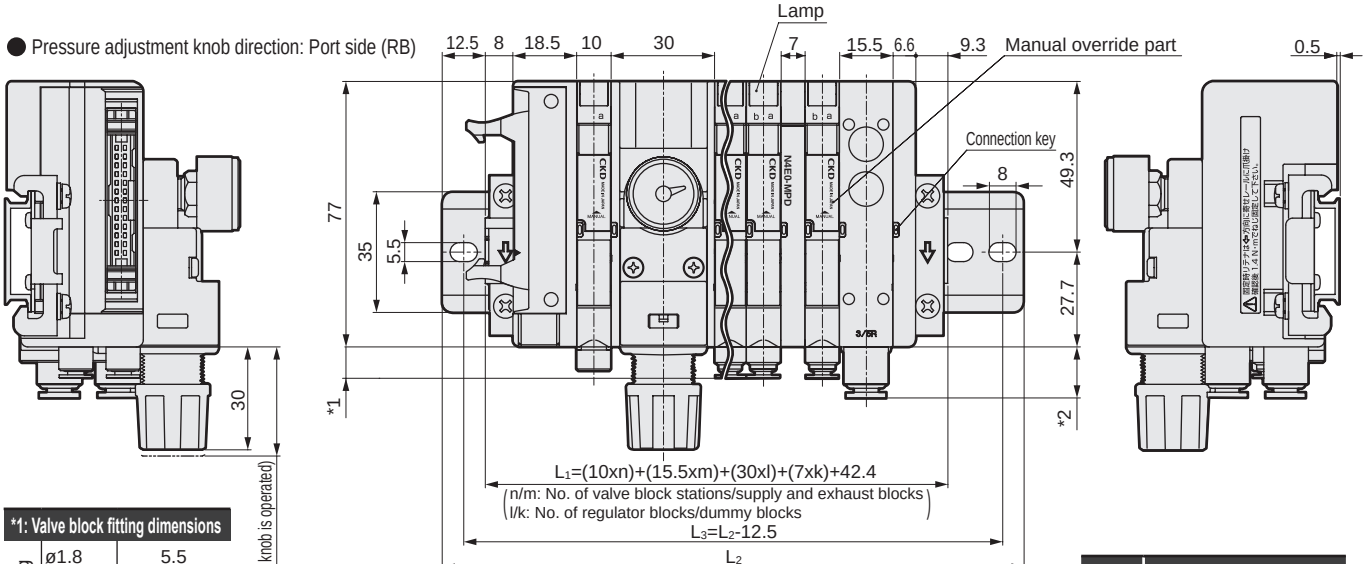

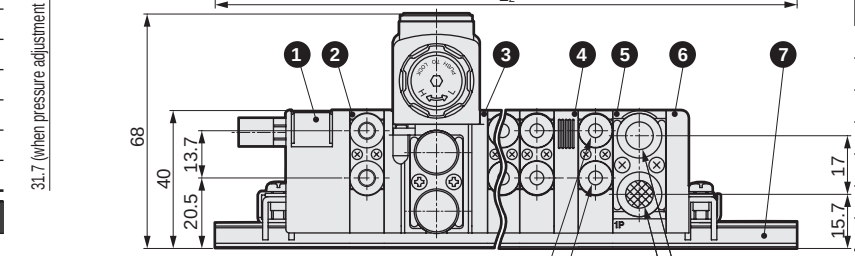

*1: Valve block fitting dimensions		
Push-in fitting	ø1.8	5.5
	ø4	9.5
	ø6	10.7
	ø1/8"	10.0
	ø5/32"	9.6
Fiber tube		8.5
M5 female thread		6.9

*2: Supply/exhaust block fit. dim.	
ø6	14
ø8	14.8
ø1/4"	15.1
ø5/16"	15.3

No.	Part name
1	Wiring block T5*
2	Valve block
3	Regulator block
4	Dummy block
5	Supply and exhaust block
6	End block R
7	DIN rail

Dimensions

● Piping blocks (common for all types)

For fiber tube
Push-in fitting (upward)
● ø1.8 (CL18)

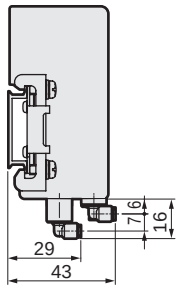

Valve block
Push-in L fitting (upward)
● ø4 (CL4)

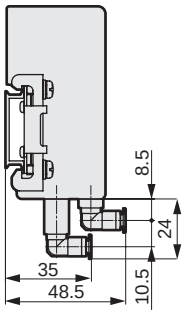

● ø6 (CL6)

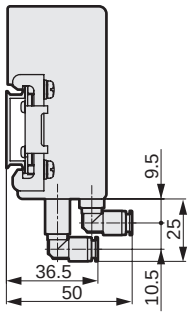

Valve block
Push-in L fitting (upward)
● ø1/8" (CL3N)

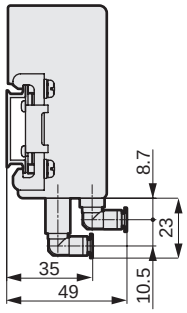

● ø5/32" (CL4N)

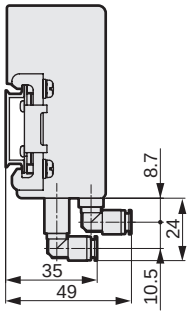

Supply and exhaust block
Push-in L fitting (upward)
● ø6 (CL6)

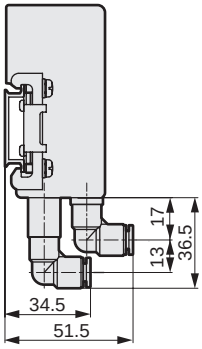

● ø8 (CL8)

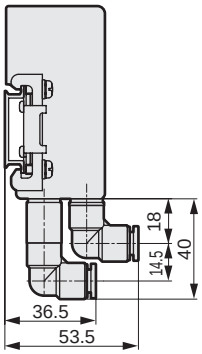

Supply and exhaust block
Push-in L fitting (upward)
● ø1/4" (CL6N)

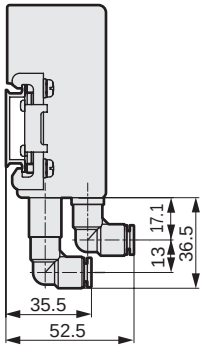

● ø5/16" (CL8N)

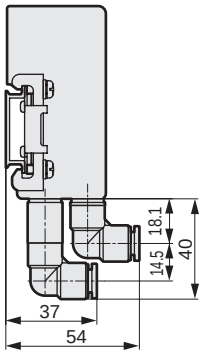

Supply and exhaust block for external pilot

● Upward piping

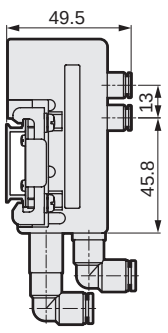

● Lateral piping

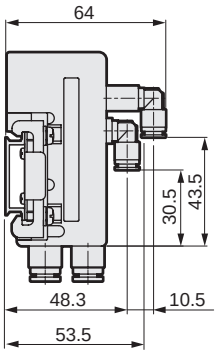

● Upward piping
(Inch fitting specifications)

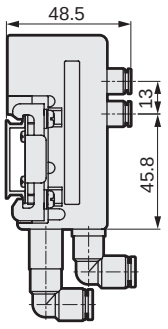

● Lateral piping
(Inch fitting specifications)

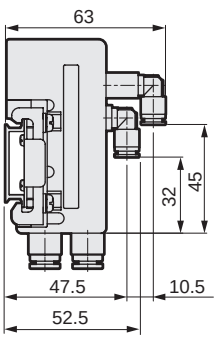

● Dimensions with T50 power supply connector

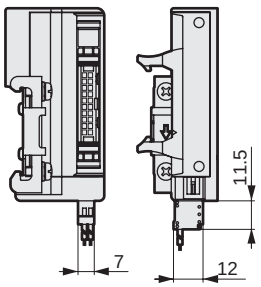

Feed connector
(Included with product)



Applicable wire
AWG28-20

● Built-in individual power supply function (AUX)

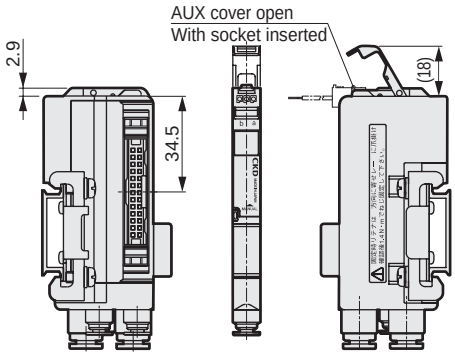

● D-sub-connector (T30/T30R): How to switch the connector direction

Usage in a horizontal state

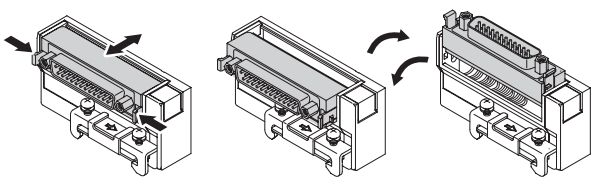

Hold the lever and pull the connector out horizontally. Push in the connector horizontally for storage. (Must be fixed.)

Rotate the connector. Fix the connector in the horizontal or vertical state during use.

Usage in a vertical state

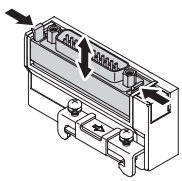

Hold the lever and pull the connector out vertically. Push in the connector horizontally for storage. (Must be fixed.)

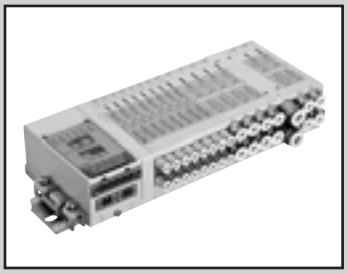

MN4E0/MN4E00 Mix manifold

MN3EX0/MN4EX0 Series

● Cylinder bore size: ø4 to ø32

RoHS

Specifications

Common with all series. Refer to pages 872 and 896.

How to order

Block manifolds

MN 4 EX0 - C4 - R - M T53 E - 5 - 3

DIN rail Mounting method

A Valve type

B Port size

C Adjustment function

D Manual override

E Wiring method

F Terminal/connector pin array

G Option

H Station No.

I Voltage

Code	Description
A Valve type	
3	3-port valve or two 3-port valves integrated
4	4-port valve or 3, 4-port valve mix
B Port size	
C18	ø1.8 push-in fitting lateral (compatible tube UP-9402)
CL18	ø1.8 push-in fitting upward (compatible tube UP-9402)
C4	ø4 push-in fitting lateral
CL4	ø4 push-in fitting upward
CX	Mix push-in fitting (*9)
C3N	ø1/8" push-in fitting lateral
CL3N	ø1/8" push-in fitting upward
C4N	ø5/32" push-in fitting lateral
CL4N	ø5/32" push-in fitting upward
CXN	Mix push-in fitting (*9)
C Adjustment function	
Blank	Without regulator block
R	Regulator block equipped manifold (*1)(*2)
D Manual override	
Blank	Manual override with manual cover (for locking/non-locking)
M	Manual override with manual cover (for non-locking)
E Wiring method	
Refer to the following page for the wiring method.	
F Terminal/connector pin array	
Blank	Standard wiring
W	Double wiring (*3)
G Option	
Blank	No
E	Low exoergic/energy circuit type (*4))(*5)
A	Ozone-proof product
F	Port A/B filter integrated (*6)
H Station No.	**(*8)**
1	1 stations
to	to
32	32 stations (*7)
I Voltage	
3	24 VDC
4	12 VDC

Precautions for model No. selection

*1: The two 3-port valves integrated type resets the main valve with the main pressure, so if there is a difference between the pilot pressure and main pressure, the response time may be delayed.

*2: Check that the main pressure supplied to the valve block with two 3-port valves integrated is not higher than the pilot pressure, and that the main pressure does not drop below 0.2 MPa.

***3 :** Refer to the connector pin layout (example) on pages 934 to 948 for the double wiring specifications.
When ordering individual valve blocks, the double wiring designation is limited to the 4-position single solenoid for the 2-port valve and to the 3-position single solenoid for the 2-port valve.

*4: Energizing is limited to the plus common.

*5: Individual wiring is not available for low exoergic/energy circuit type.

*6: A filter (for preventing entry of foreign matter) is incorporated in the supply and exhaust block's port P.

***7:** Differs depending on the specifications. Refer to pages 873 and 897.

*8: A dummy block is counted in the station No.

*9: Inch fittings cannot be mixed with metric fittings.

[Wiring method list]

Code		Description
Ⓔ Wiring method		
TM1A		Intermediate wiring block RITS connector 6P x 2
TM1C		Intermediate wiring block RITS connector 6P
TM52		Intermediate wiring block 10-pin flat cable connector, 8 points compatible
T30(N)		25-pin D sub-connector Left-sided spec.
T30(N)R		25-pin D sub-connector Right-sided spec.
T50		20-pin flat cable connector Left-sided spec. (with power supply terminal)
T50R		20-pin flat cable connector Right-sided spec. (with power supply terminal)
T51		20-pin flat cable connector Left-sided spec.
T51R		20-pin flat cable connector Right-sided spec.
T52		10-pin flat cable connector Left-sided spec.
T52R		10-pin flat cable connector Right-sided spec.
T53		26-pin flat cable connector Left-sided spec.
T53R		26-pin flat cable connector Right-sided spec.
TX		Wiring block mix (*11) (*12) (*13)
T6G1		CC-Link 16 points
T7D1		Close contact DeviceNet 16 points
T7D2		Close contact DeviceNet 32 points
T7G1		Close contact CC-Link 16 points
T7G2		Close contact CC-Link 32 points
T7N1		Close contact S-LINK V 16 points
T7N2		Close contact S-LINK V 32 points
T7EC1		Close contact EtherCAT 16 points (Port side leadout)
T7EC2		Close contact EtherCAT 32 points (Port side leadout)
T7ECT1		Close contact EtherCAT 16 points (Wiring side leadout)
T7ECT2		Close contact EtherCAT 32 points (Wiring side leadout)
D2	Individual wiring*	D-connector Lead wire length 300 mm
D20		D-connector Lead wire length 500 mm
D21		D-connector Lead wire length 1000 mm
D22		D-connector Lead wire length 2000 mm
D23		D-connector Lead wire length 3000 mm
D2N		D-connector without lead wire without socket
D3		D-connector without lead wire with socket/terminal

*11: Request 2 pcs in the manifold specifications sheet. Contact CKD for 3 pcs. or more.
*12: Individual wiring is not available for the TX wiring method.
*13: For the TX wiring connection method, the maximum station No. is 24.
* Individual wiring: Individual wiring specification is available with valve blocks designated for it.

Mix block dimensions

MN$^{3}_{4}$EXO

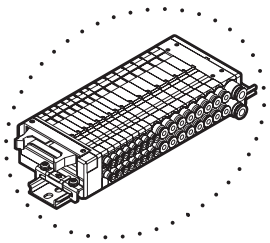

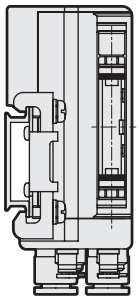

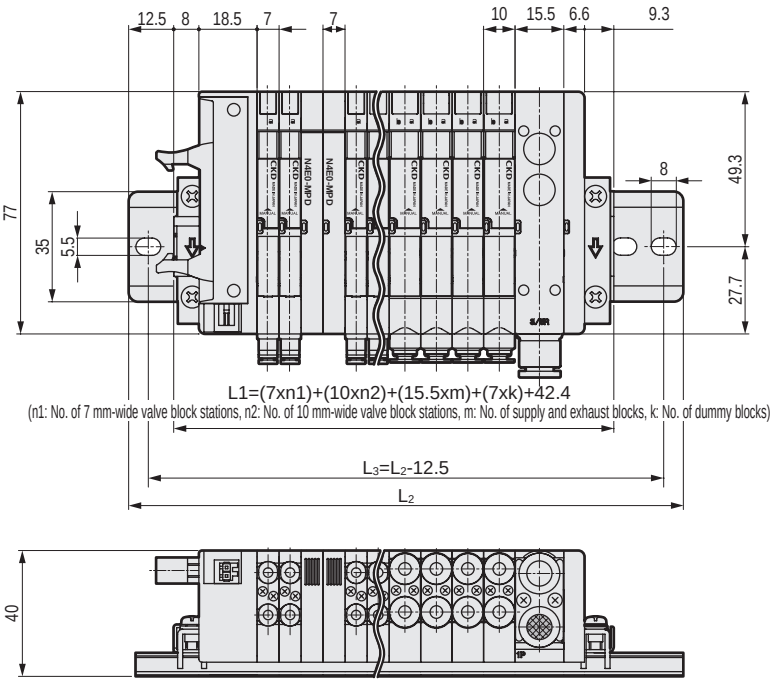

Block manifold: Block configuration

Free assembly enables multiple station expansion and maintenance.

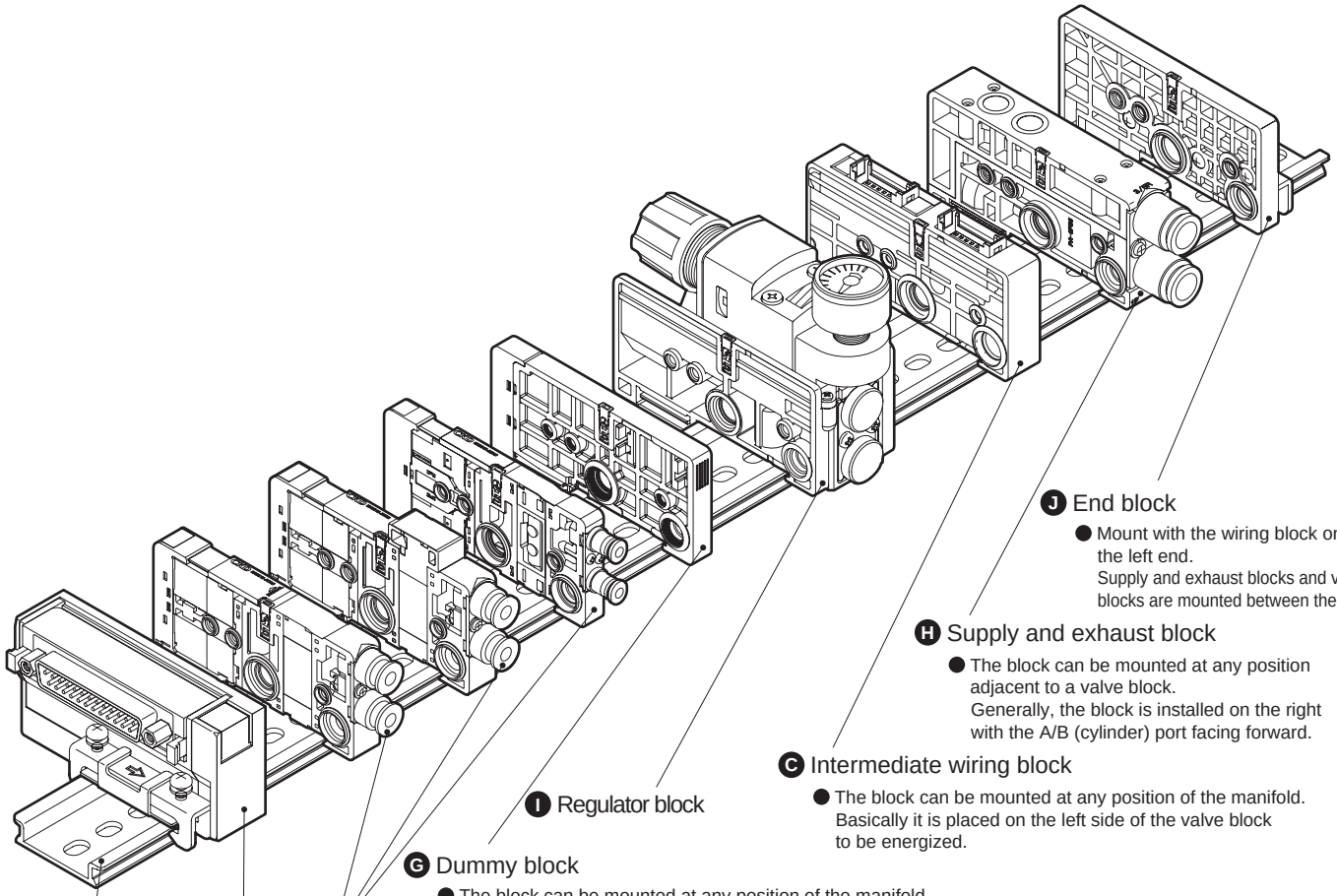

J End block
- Mount with the wiring block on the left end.
  Supply and exhaust blocks and valve blocks are mounted between them.

H Supply and exhaust block
- The block can be mounted at any position adjacent to a valve block.
  Generally, the block is installed on the right with the A/B (cylinder) port facing forward.

C Intermediate wiring block
- The block can be mounted at any position of the manifold.
  Basically it is placed on the left side of the valve block to be energized.

I Regulator block

G Dummy block
- The block can be mounted at any position of the manifold.

F Valve block (7 mm pitch, 10 mm pitch)
- The selected supply and exhaust block determines internal or external pilot.
  Valve block is the same for both types.

A **B** **D** **E** Wiring block
- Mount with the end block on the right end. Supply and exhaust blocks and valve blocks are mounted between them.

K Mounting rail

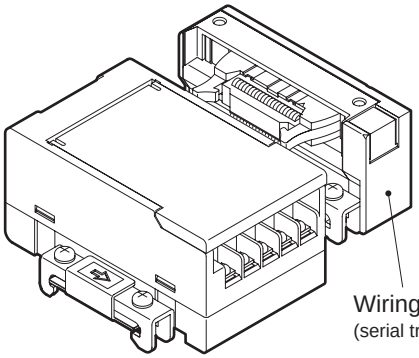

Wiring block
(serial transmission device unit)

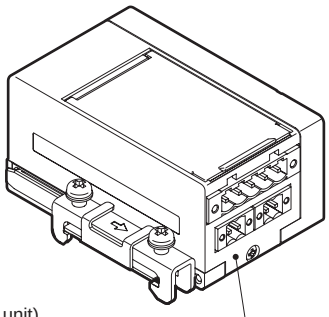

Wiring block
(serial transmission device unit
(close contact type))

Block manifold configuration

Wiring section — Wiring block

Ⓐ D sub-connector (T30(N)/T30(N)R)

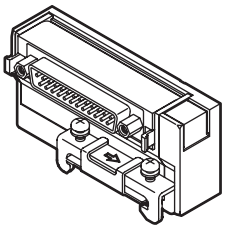

Ⓑ Flat cable connector (T5*/T5*R)

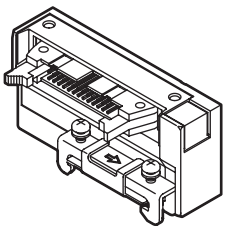

Ⓒ Intermediate wiring block (TM*)

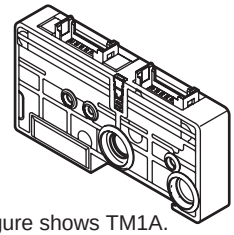

Note: Figure shows TM1A.

Ⓓ Serial transmission block (T6G1)

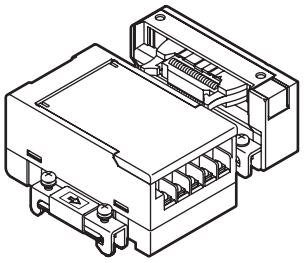

Ⓔ Serial transmission block (close contact) (T7*)

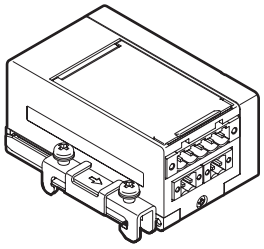

Piping — Piping block

Ⓕ Valve block

● Push-in fitting Lateral

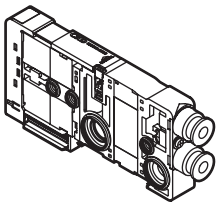

● Push-in fitting Upward

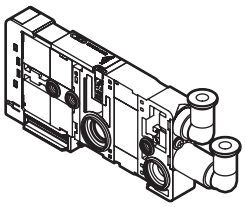

● Female thread (with rotation-stop)

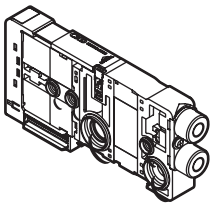

Ⓖ Dummy block (MP*)

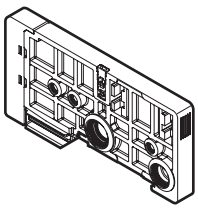

Ⓗ Supply and exhaust block

● For internal pilot (Q)

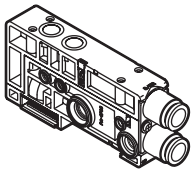

● For external pilot (QK)

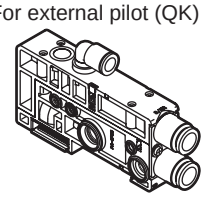

● Atmospheric release (QX)

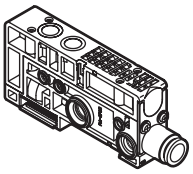

Ⓘ Regulator block

Pressure adjustment knob wiring side (RA)

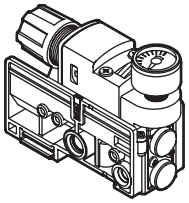

Pressure adjustment knob port side (RB)

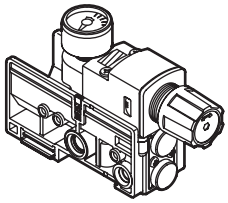

Ⓙ End block

Left side mount (EL)

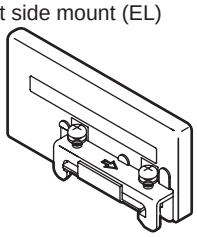

Right side mount (ER)

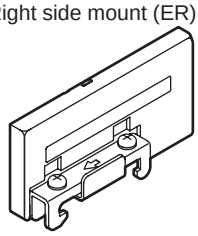

Related products — Related products

Ⓚ Related products

● Mounting rail

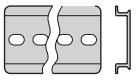

● Silencer

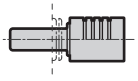

● Blanking plug

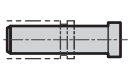

● Cable with D sub-connector

● Push-in cartridge fitting

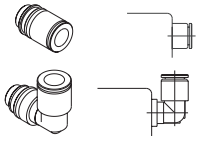

● Push-in cartridge fitting for supply and exhaust block

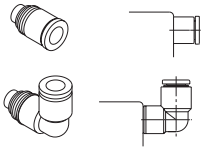

● ø1.8 barbed threaded fitting

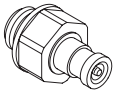

● Push-in fitting tube remover

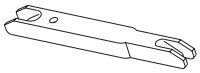

● Power feed connector/replacement fuse for T50 power supply terminal

Wiring section

Ⓐ D sub-connector (T30)

N4E0-T30

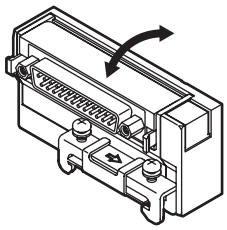

N4E0-T30R

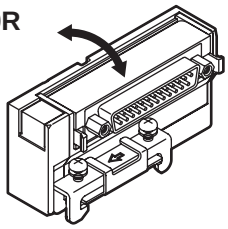

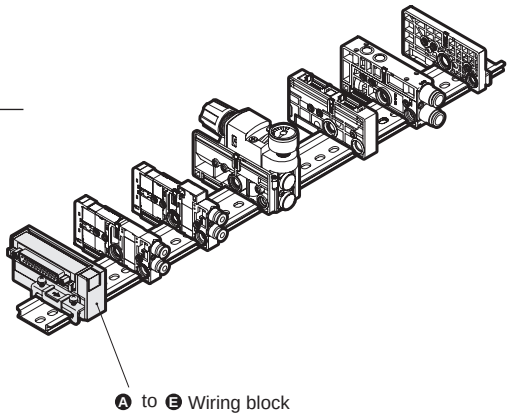

* D sub-connector projection can be switched between upward and downward.

Ⓐ to Ⓔ Wiring block

Ⓑ Flat cable connector (T5*)

● With power supply terminal

N4E0-T50

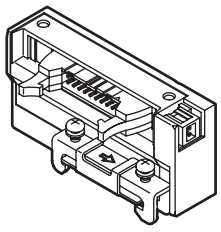

N4E0-T50R

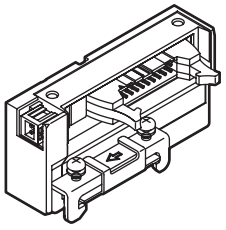

● Without power supply terminal

N4E0-T51
N4E0-T52
N4E0-T53

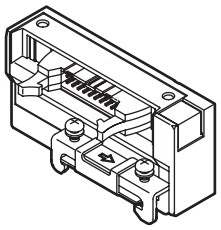

N4E0-T51R
N4E0-T52R
N4E0-T53R

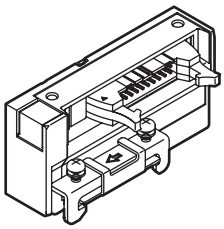

* Figure shows T51. T52 and T53 have a different number of pins. (T51: 20 pins, T52: 10 pins, T53: 26 pins)

Ⓒ Intermediate wiring block

● RITS connector 6P x 2

N4E0-TM1A

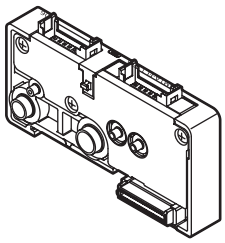

● RITS connector 6P

N4E0-TM1C

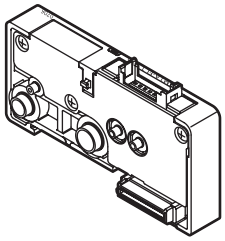

● 10-pin flat cable connector

N4E0-TM52

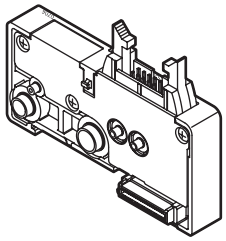

Ⓓ Serial transmission block (T6G1)

N4E0 - T6G1

Model No. — Ⓐ Type

Code	Description
Ⓐ Type	
T6G1	CC-Link 16 points

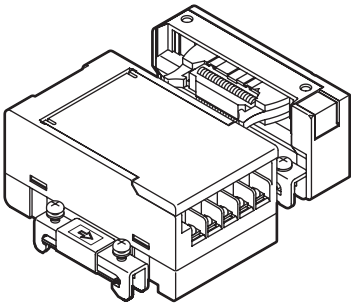

Ⓔ Serial transmission block (close contact) (T7*)

N4E0 - T7G2

Model No. — Ⓐ Type

Code	Description
Ⓐ Type	
T7D1	DeviceNet 16 points
T7D2	DeviceNet 32 points
T7G1	CC-Link 16 points
T7G2	CC-Link 32 points
T7N1	S-LINK V 16 points
T7N2	S-LINK V 32 points
T7EC1	EtherCAT 16 points
T7EC2	EtherCAT 32 points
T7ECT1	EtherCAT 16 points
T7ECT2	EtherCAT 32 points

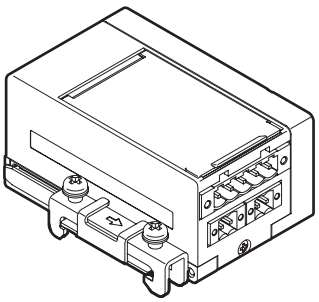

● Discrete serial transmission device unit

4G - OPP3 - 1G

Ⓐ Wiring method

Code	Description
Ⓐ Wiring method	
1G	CC-Link 16 points

* The device unit is the same as that of 4G Series.
  Note that the model No. is “4G-*-*”.

Piping

Ⓕ Valve block

● Discrete valve block.

N 3 E 00 1 0 - C3 - M W EF - 3

Model No. / Ⓐ Valve type
Ⓑ Solenoid position
Ⓒ Port size
Ⓓ Manual override
Ⓔ Wiring connection method
Ⓕ Terminal/connector pin array
Ⓖ Option
Ⓗ Voltage

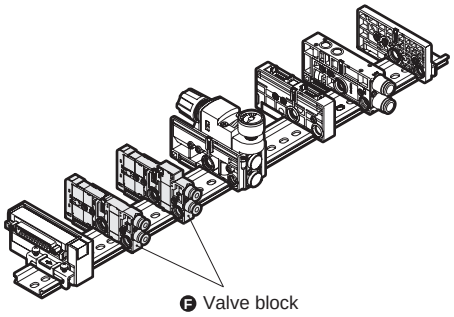
Ⓕ Valve block

Code	Description		N3E00	N3E0	N4E00	N4E0
Ⓐ Valve type/model No.						
N3E00	3-port valve or two 3-port valves integrated (7 mm pitch valve block)		●			
N3E0	3-port valve or two 3-port valves integrated (10 mm pitch valve block)			●		
N4E00	4-port valve (7 mm pitch valve block)				●	
N4E0	4-port valve (10 mm pitch valve block)					●
Ⓑ Solenoid position (*1)						
1	3-port valve	Single NC self-reset (Differential pressure spring return)	●	●		
11	3-port valve	Single NO self-reset (Differential pressure spring return)	●	●		
2	3-port valve	Double NC self-hold	●	●		
21	3-port valve	Double NO self-hold	●	●		
66	Two 3-port valves integrated	A side valve: NC self-reset (Differential pressure return)	●	●		
66S	Two 3-port valves integrated	B side valve: NC self-reset (Differential pressure spring return)	●	●		
67	Two 3-port valves integrated	A side valve: NC self-reset (Differential pressure return)	●	●		
67S	Two 3-port valves integrated	B side valve: NO self-reset (Differential pressure spring return)	●	●		
76	Two 3-port valves integrated	A side valve: NO self-reset (Differential pressure return)	●	●		
76S	Two 3-port valves integrated	B side valve: NC self-reset (Differential pressure spring return)	●	●		
77	Two 3-port valves integrated	A side valve: NO self-reset (Differential pressure return)	●	●		
77S	Two 3-port valves integrated	B side valve: NO self-reset (Differential pressure spring return)	●	●		
1	4-port valve	2-position single self-reset (Differential pressure spring return)			●	●
2	4-port valve	2-position double self-hold			●	●
3	4-port valve	3-position all ports closed				●
4	4-port valve	3-position A/B/R connection				●
5	4-port valve	3-position P/A/B connection				●
Ⓒ Port size						
CF	ø1.8 push-in fitting lateral (compatible tube UP-9402, EH-5802)			●		●
C18	ø1.8 push-in fitting lateral (compatible tube UP-9402, EH-5802)		●	●	●	●
CL18	ø1.8 push-in fitting upward (compatible tube UP-9402, EH-5802)		●	●	●	●
C3	ø3 push-in fitting lateral		●		●	
CL3	ø3 push-in fitting upward		●		●	
C4	ø4 push-in fitting lateral		●	●	●	●
CL4	ø4 push-in fitting upward		●	●	●	●
C6	ø6 push-in fitting lateral			●		●
CL6	ø6 push-in fitting upward			●		●
M3	M3 female thread (with rotation-stop)		●		●	
M5	M5 female thread (with rotation-stop)			●		●
C3N	ø1/8" push-in fitting lateral		●	●	●	●
CL3N	ø1/8" push-in fitting upward		●	●	●	●
C4N	ø5/32" push-in fitting lateral		●	●	●	●
CL4N	ø5/32" push-in fitting upward		●	●	●	●
Ⓓ Manual override						
Blank	Non-locking/locking common (with manual cover)		●	●	●	●
M	Manual override for non-locking (with manual cover)		●	●	●	●
Ⓔ Wiring connection method						
Refer to the following page for the wiring method.			●	●	●	●
Ⓕ Terminal/connector pin array						
Blank	Standard wiring		●	●	●	●
W	Double wiring (for reduced wiring) (*2) (*3)		●	●	●	●
Ⓖ Option						
Blank	No		●	●	●	●
E	Low exoergic/energy saving circuit type (*4) (*5)		●	●	●	●
U	Built-in individual power supply function (AUX) (*5) (*6)			●		●
A	Ozone-proof product (*7)			●		●
F	Port A/B filter integrated		●	●	●	●
Ⓗ Voltage						
3	24 VDC		●	●	●	●
4	12 VDC		●	●	●	●

● Push-in fitting lateral

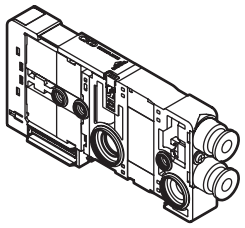

● Push-in fitting upward

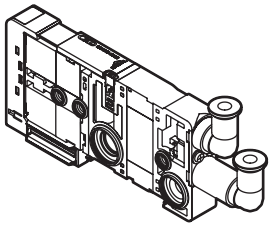

● Female thread (with anti-rotation)

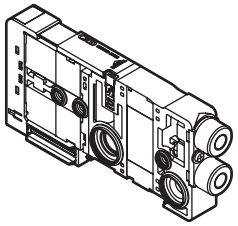

*1 : For specifications of the self-reset, refer to the precautions on page 959.
*2 : Double wiring is available only for the 2-position single.
*3 : Double wiring is not available for single individual wiring valve blocks.
*4 : N3E00 and N4E00 individual wiring is not available for the low exoergic/reduced wiring circuit.
*5 : Energizing is limited to the plus common. Also, "E" and "U" cannot be selected together.
*6 : "U" is not available for individual wiring.
*7 : Supported as standard for N3E00 and N4E00.

[Wiring method list]

Code	Description		Model No. N3E00	N3E0	N4E00	N4E0
Ⓔ Wiring method						
Blank	Valve block for reduced wiring		●	●	●	●
D2	Individual wiring	D-connector Lead wire length 300 mm	●	●	●	●
D20		D-connector Lead wire length 500 mm	●	●	●	●
D21		D-connector Lead wire length 1000 mm	●	●	●	●
D22		D-connector Lead wire length 2000 mm	●	●	●	●
D23		D-connector Lead wire length 3000 mm	●	●	●	●
D2N		D-connector without lead wire without socket	●	●	●	●
D3		D-connector without lead wire with socket/terminal	●	●	●	●

Ⓖ Dummy block

N4E0 - MPD

Ⓐ Type

Ⓐ Type	
MPS	Single wiring
MPD	Double wiring

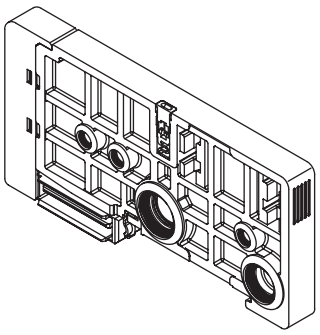

Piping

Ⓗ Supply and exhaust block

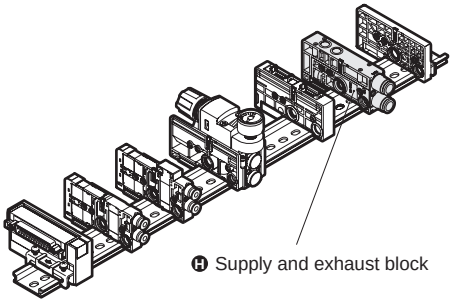

- The block can be mounted at any position adjacent to a valve block. (Generally, the block is installed on the right with the A/B (cylinder) port facing forward.)
- Supply the air for the two 3-port valves integrated with Q-6□ and 8□. (Cannot be used with the external pilot.)

N4E0 - Q - 8 - SA - C

Model No. Ⓐ Type Ⓑ Port size Ⓒ Option Ⓓ Wiring method

Ⓐ Type (*1)		Ⓑ Port size (port P/R) (*2)		Ⓒ Option (*3) (*5)		Ⓓ Wiring method	
Q	Internal pilot	**6**	ø6 Push-in fitting	**Blank**	Without partition	**Blank**	With internal wiring circuit
QK	External pilot	**6L**	ø6 Push-in fitting upward	**S**	P/R blocked, PA/PR through	**C**	Without internal wiring circuit *4
QZ	Multi-pressure circuit (P, R only)	**8**	ø8 Push-in fitting	**SA**	P/R/PA/PR blocked		
QKZ	Multi-pressure circuit, external pilot (P, R, PA, PR separated)	**8L**	ø8 Push-in fitting upward				
		6N	ø1/4" Push-in fitting				
QX	Atmospheric release (with silencer)	**6LN**	ø1/4" Push-in fitting upward				
QKX	External pilot, atmosphere release (with silencer)	**8N**	ø5/16" Push-in fitting				
		8LN	ø5/16" Push-in fitting upward				

*1: QZ cannot be used independently. Be sure to use with another type (Q/QK/QKZ).

*2: In order to prevent foreign matter from entering, the P-port is equipped with a filter.

*3: The manifold port faces forward to cut off the flow path between the supply and exhaust block and adjacent block on the right. (Refer to the circuit diagram on page 957.)

Option code

S: Cuts off the 1(P) and 3(R) flow paths.

SA: Cuts off the 1(P), 3(R), 12/14(PA) and 82/84(PR) flow paths.

*4: When using the wiring block with a [left + right] or [intermediate + right] combination, arrange the supply and exhaust block “without internal wiring circuit” between the left control station and right control station.

*5: When the end block N4EO-ER is selected, if installing a supply/exhaust block adjacent to the left, Options: S, SA cannot be selected.

● Q-8 (N)
QZ-8 (N)

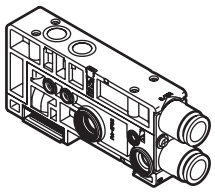

● Q-8L (N)
QZ-8L (N)

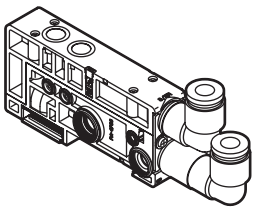

● QK-8 (N)

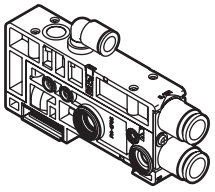

● QK-8L (N)

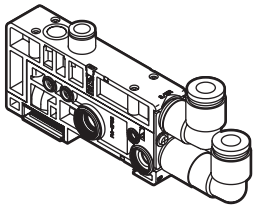

● QKZ-8 (N)

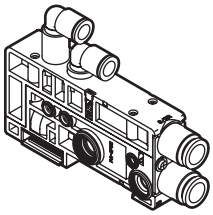

● QKZ-8L (N)

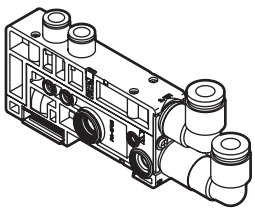

● QX-8 (N)

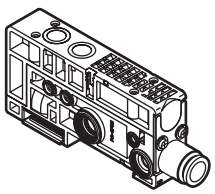

● QX-8L (N)

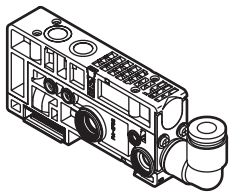

● QKX-8 (N)

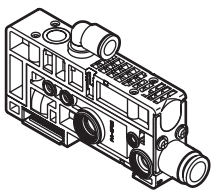

● QKX-8L (N)

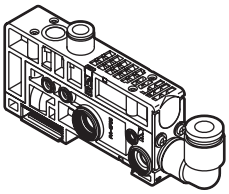

Piping

Ⓘ Regulator block

● Discrete regulator block

N4E0 - RA - FR - C8 - A

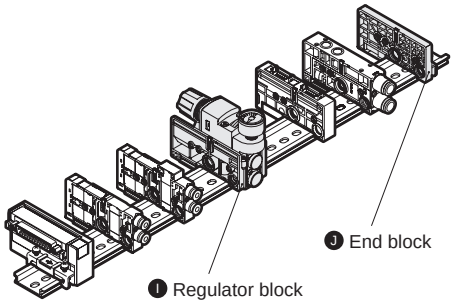

Ⓐ Pressure adjustment knob direction

Ⓐ Pressure adjustment knob direction			
RA	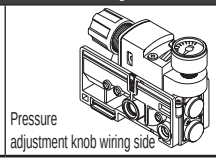 Pressure adjustment knob wiring side	**RB**	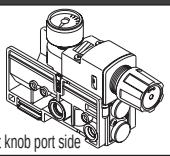 Pressure adjustment knob port side

Ⓑ Air supply/pressure adjustment direction (*2)

Ⓑ Air supply/pressure adjustment direction			
LR	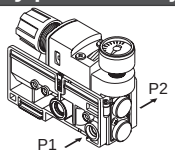	**RL**	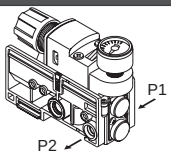
FR	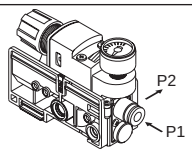	**FL**	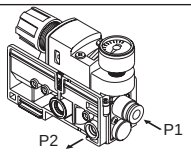

Ⓒ Fitting bore size (*3)

Ⓒ Fitting bore size	
Blank	Plug (for air supply/pressure adjustment direction LR and RL)
C6	ø6 push-in fitting (for air supply and pressure adjustment direction FR, FL)
C8	ø8 push-in fitting (for air supply and pressure adjustment direction FR, FL)
CL6	ø6 push-in fitting, upward (for pressure adjustment knob direction RA and air supply and pressure adjustment direction FR, FL)
CL8	ø8 push-in fitting, upward (for pressure adjustment knob direction RA and air supply and pressure adjustment direction FR, FL)
C6N	ø1/4" push-in fitting (for air supply and pressure adjustment direction FR, FL)
C8N	ø5/16" push-in fitting (for air supply and pressure adjustment direction FR, FL)
CL6N	ø1/4" push-in fitting, upward (for pressure adjustment knob direction RA and air supply and pressure adjustment direction FR, FL)
CL8N	ø5/16" push-in fitting, upward (for pressure adjustment knob direction RA and air supply and pressure adjustment direction FR, FL)

Ⓓ Option

Ⓓ Option	
Blank	None
A	Ozone-proof product

Note on model No. selection

*1: Regulator block equipped manifold needs one or more supply and exhaust blocks for pilot air.
*2: Consult with CKD when using the regulator block independently for external pressure control other than the manifold.
*3: Elbow fitting (CL6/CL8/CL6N/CL8N) cannot be selected when the pressure adjustment knob direction is RB.

● Discrete regulator model No.

RB500-00 M

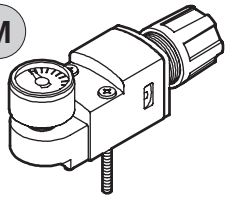

Applications (Consult with CKD for other applications.)

Application 1: Depressurization of internal main pressure

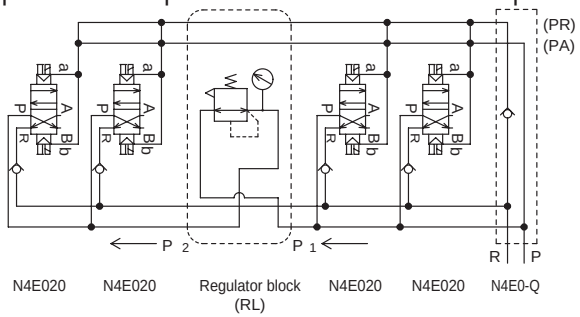

* Reducing the pressure (P = P_1) supplied from the supply and exhaust block

Application 2: Depressurization of external main pressure

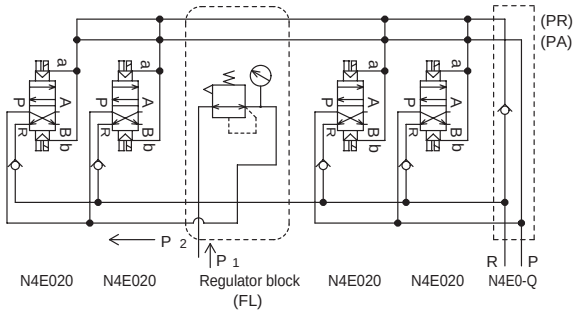

* Reducing the pressure (P ≠ P_1) supplied directly from the regulator block

Ⓙ End block

● Mount the block on the left or right side with the piping port facing forward.

N4E0 - ER

Model No. Ⓐ Type

Ⓐ Type	
EL	Left side mount
ER	Right side mount

● N4E0-EL

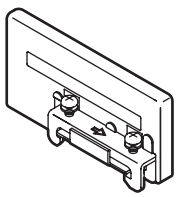

● N4E0-ER

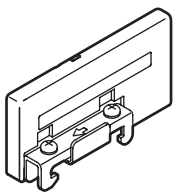

Related products

● Mounting rail

N4G-BAA[Length]

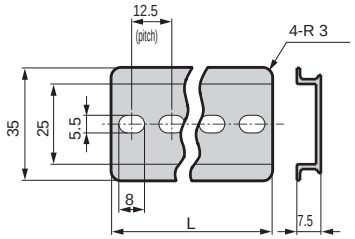

● Silencer (accessories)

SLW-H8
SLW-H6

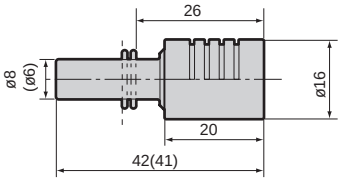

* Values in ( ) are for H6
Effective cross-sectional area 9 mm^2

*This product cannot be used with inch fitting specifications.

● Blanking plug (accessory)

PG-P2-B (for ø1.8)

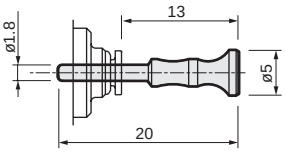

N4E00-JOINT-PP3MW (for ø3)

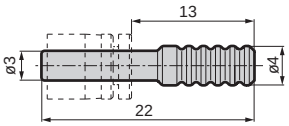

(for ø4, ø6, ø8)

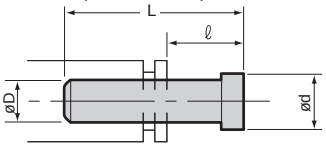

Model No.	D	L	ℓ	d
GWP 4-B	ø4	27	16	6
GWP 6-B	ø6	29	17	8
GWP 8-B	ø8	33	17.5	10

● ø1.8 barbed fitting (10 pcs./set)

N4E0 - JOINT - PTN2-M5

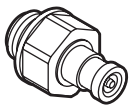

Code	Dimensions
PTN2-M3	Barbed fitting M3 screw-in
PTN2-M5	Barbed fitting M5 screw-in
PTN2-6	Barbed fitting R1/8

* Contact CKD separately regarding fiber tube.

● Push-in fitting tube remover

N4E0-EOT18-4 (for ø1.8, ø3, ø4)
N4S0-EOT4-6 (for ø3, ø4, ø6)



Ⓚ Related products

● Push-in cartridge fitting

N4E00 - JOINT - C4

Dedicated for valve block.

Code	Dimensions
C18	ø1.8 push-in cartridge fitting
C3	Push-in cartridge fitting for ø3 tube
C4	Push-in cartridge fitting for ø4 tube
CL18	ø1.8 short radial push-in cartridge fitting
CL3	Short radial push-in cartridge fitting for ø3 tube
CL4	Short radial push-in cartridge fitting for ø4 tube
CLL18	ø1.8 long radial push-in cartridge fitting
CLL3	Long radial push-in cartridge fitting for ø3 tube
CLL4	Long radial push-in cartridge fitting for ø4 tube
CPG	Plug cartridge
CP	Fitting fixing plate (with machine screw for plate fixing)
CM3	M3 Cartridge fitting
CMB	M3 Plug cartridge (Fixing requires fitting anti-rotation plate for M3: CMP)
CMP	Fitting rotation-stop plate for M3 (with machine screw for plate fixing)
C3N	Push-in cartridge fitting for ø1/8" tube
C4N	Push-in cartridge fitting for ø5/32" tube
CL3N	Short radial push-in cartridge fitting for ø1/8" tube
CL4N	Short radial push-in cartridge fitting for ø5/32" tube
CLL3N	Long radial push-in cartridge fitting for ø1/8" tube
CLL4N	Long radial push-in cartridge fitting for ø5/32" tube

N4E0 - JOINT - C4

Dedicated for valve block and supply/exhaust block port PA.
Cannot be used for ports P and R of supply and exhaust block.

Code	Dimensions
CF	ø1.8 barbed cartridge fitting
C18	ø1.8 push-in cartridge fitting
C4	Push-in cartridge fitting for ø4 tube
C6	Push-in cartridge fitting for ø6 tube
CL18	ø1.8 short radial push-in cartridge fitting
CL4	Short radial push-in cartridge fitting for ø4 tube
CL6	Short radial push-in cartridge fitting for ø6 tube
CLL18	ø1.8 long radial push-in cartridge fitting
CLL4	Long radial push-in cartridge fitting for ø4 tube
CLL6	Long radial push-in cartridge fitting for ø6 tube
CPG	Plug cartridge
CP	Fitting fixing plate (with machine screw for plate fixing)
CM5	M5 cartridge fitting (Fixing requires fitting anti-rotation plate for M5: CMP)
CMB	M5 plug cartridge (Fixing requires fitting anti-rotation plate for M5: CMP)
CMP	Fitting rotation-stop plate for M5 (with machine screw for plate fixing)
C3N	Push-in cartridge fitting for ø1/8" tube
C4N	Push-in cartridge fitting for ø5/32" tube
CL3N	Short radial push-in cartridge fitting for ø1/8" tube
CL4N	Short radial push-in cartridge fitting for ø5/32" tube
CLL3N	Long radial push-in cartridge fitting for ø1/8" tube
CLL4N	Long radial push-in cartridge fitting for ø5/32" tube

● Push-in cartridge fitting for supply and exhaust block

N4E0 - Q - JOINT - 8

For pilot pressure air supply (for PA), use the products for valve block shown above.

Code	Dimensions
6	Push-in cartridge fitting for ø6 tube
8	Push-in cartridge fitting for ø8 tube
6L	Short radial push-in cartridge fitting for ø6 tube
8L	Short radial push-in cartridge fitting for ø8 tube
6LL	Long radial push-in cartridge fitting for ø6 tube
8LL	Long radial push-in cartridge fitting for ø8 tube
6N	Push-in cartridge fitting for ø1/4" tube
8N	Push-in cartridge fitting for ø5/16" tube
6LN	Short radial push-in cartridge fitting for ø1/4" tube
8LN	Short radial push-in cartridge fitting for ø5/16" tube
6LLN	Long radial push-in cartridge fitting for ø1/4" tube
8LLN	Long radial push-in cartridge fitting for ø5/16" tube
P	Fitting fixing plate (with machine screw for plate fixing)

K Related products

● Socket assembly for power supply (for individual wiring, AUX)

N4E0 - SOCKET - D - 300

A Type *1 B Lead wire length

A Type	
S	2 wires (for single solenoid)
D	3 wires (for double solenoid)
B Lead wire length	
300	300 mm
500	500 mm
1000	1000 mm
2000	2000 mm
3000	3000 mm

*1: The model No. without lead wire is 3M0-SOCKET-SET.
(3 contacts attached, applicable wire diameter: AWG#26 to 28)

N4E00 - SOCKET - D - 300

A Type *1 B Lead wire length

A Type	
S	2 wires (for single solenoid)
D	3 wires (for double solenoid)
B Lead wire length	
300	300 mm
500	500 mm
1000	1000 mm
2000	2000 mm
3000	3000 mm

*1: The model No. without lead wire is N4E00-SOCKET-SET.
(3 contacts attached, applicable wire diameter: AWG#26 to 28)

● Connector for wiring block TM1 (RITS connector 6P)

N4E0-TM-CONNECTOR Tyco Electronics Japan G.K. RITS connector 6P (part No.: 1473562-6)

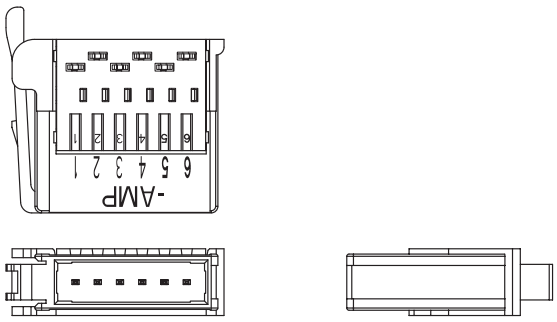

· Compatible wire (Tin-plated wire recommended)

Sheath finished outer ø	Ref. wire cross-sectional area	No. of strands/diameter
mm	mm^2	Qty/mm
ø1.0 to 1.15	ø0.2 to 0.3	to 60/0.08

For the detailed specifications of applicable wires, confirm with * below.
* Tyco Electronics Japan G.K.
Product information center
TEL +81-44-844-8052
URL http://www.te.com/jpn-ja/about-te/our-company/te-japan.html
· Dedicated crimping tool 1729940-1

● Power feed connector for power supply terminal for T50

N4E0-T50-CONNECTOR

(Compatible wires AWG28-20 / 0.08 to 0.5 mm^2
(Commercially available WAGO connector plug 733-102))

● Replacement fuse for T50

4T9-LM16

(LM16, Daito Communication Apparatus Co., Ltd.)

● Communication connector for T7D

MSTB2.5/5 - STF - 5.08AUM

Phoenix Contact (Part No.: 5880008)

● Communication connector for T7G and T7N

BLZP5.08HC/05/180F SN OR BX

Weidmüller Corp. (Part No.: 194412)

● Power supply connector for T7D, T7G and T7N

BL3.5/2F Weidmüller Corp. (Part No.: 160664)

MEMO

D sub-connector: Wiring method T30(N)

T30(N) Connectors

The connector used for T30(N) wiring, called a D sub-connector, is used widely for FA and OA devices. The 25P in particular is also an RS-232-C Standards designated connector, used for personal computer communication.

■ The manifold station numbers are counted as station 1, station 2, station 3 and so forth starting from the wiring block side. T30 is counted from the left direction and T30R from the right direction.

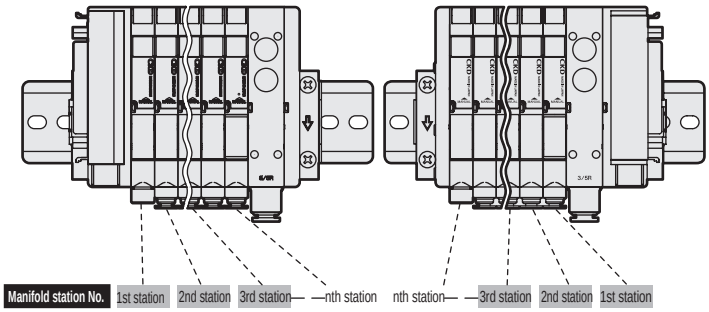

Precautions for connector T30(N)

(1) Signal arrays of the PLC output unit must match signal arrays on the valve side.
(2) The working power is 12/24 VDC dedicated.
(3) A voltage drop may occur due to simultaneous energizing or cable length. Confirm that the voltage drop for the solenoid is within 10% of the rated voltage.

* When using the valve block with individual power supply function (AUX), type with low exoergic/energy-saving circuit, energizing is limited to the plus common.

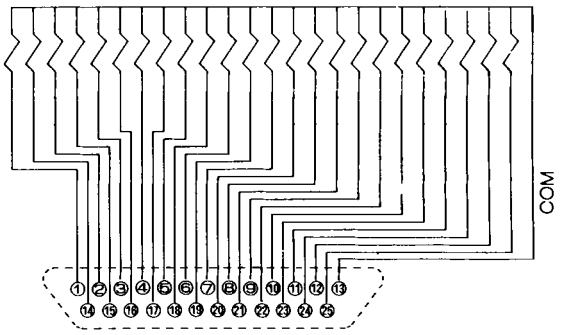

T30(N) connector pin array (example)

*1 The numerals of valve numbers 1a, 1b, 2a, 2b ... indicate the order of stations first station, second station... and the letters “a” and “b” indicate the “a side” solenoid and “b side” solenoid, respectively. The manifold’s max. station number differs depending on the model. Check the specifications of each model.

Connector pin No.

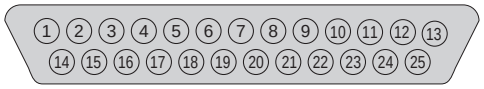

● For single solenoid valve only

[Standard wiring]

Pin No.	1	2	3	4	5	6	7	8	9	10	11	12	13
Valve No.	1a	3a	5a	7a	9a	11a	13a	15a	17a	19a	21a	23a	COM
Pin No.	**14**	**15**	**16**	**17**	**18**	**19**	**20**	**21**	**22**	**23**	**24**	**25**	
Valve No.	2a	4a	6a	8a	10a	12a	14a	16a	18a	20a	22a	24a	

[Double wiring]

Pin No.	1	2	3	4	5	6	7	8	9	10	11	12	13
Valve No.	1a	2a	3a	4a	5a	6a	7a	8a	9a	10a	11a	12a	COM
Pin No.	**14**	**15**	**16**	**17**	**18**	**19**	**20**	**21**	**22**	**23**	**24**	**25**	
Valve No.	(Blank)	(Blank)	(Blank)	(Blank)	(Blank)	(Blank)	(Blank)	(Blank)	(Blank)	(Blank)	(Blank)	(Blank)	

● For double solenoid valve only

Pin No.	1	2	3	4	5	6	7	8	9	10	11	12	13
Valve No.	1a	2a	3a	4a	5a	6a	7a	8a	9a	10a	11a	12a	COM
Pin No.	**14**	**15**	**16**	**17**	**18**	**19**	**20**	**21**	**22**	**23**	**24**	**25**	
Valve No.	1b	2b	3b	4b	5b	6b	7b	8b	9b	10b	11b	12b	

● For mixed use (single/double mixture)

Pin No.	1	2	3	4	5	6	7	8	9	10	11	12	13
Valve No.	1a	3a	4a	5a	7a	8a	10a	11b	12b	14a	15b	17a	COM
Pin No.	**14**	**15**	**16**	**17**	**18**	**19**	**20**	**21**	**22**	**23**	**24**	**25**	
Valve No.	2a	3b	4b	6a	7b	9a	11a	12a	13a	15a	16a	17b	

Pin No.	1	2	3	4	5	6	7	8	9	10	11	12	13
Valve No.	1a	2a	3a	4a	5a	6a	7a	8a	9a	10a	11a	12a	COM
Pin No.	**14**	**15**	**16**	**17**	**18**	**19**	**20**	**21**	**22**	**23**	**24**	**25**	
Valve No.	(Blank)	(Blank)	3b	4b	(Blank)	(Blank)	7b	(Blank)	(Blank)	(Blank)	11b	12b	

How to order cable with D sub-connector

N4T - CABLE - D 0 0 - 1

* Each pneumatic valve model can be used for D sub-connector T30(N).

Ⓐ User interface

Ⓑ Cable length

Code	Model N4T
Ⓐ User interface	
0	Cut only
1	With round terminal for M3.5 screw
Ⓑ Cable length	
1	1 m
3	3 m
5	5 m

D sub-connector terminal No. and conductor

● N4T-CABLE-D00-Ⓑ

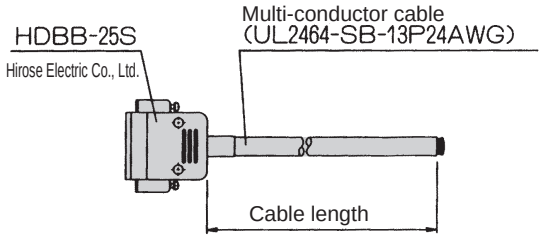

D sub-connector terminal No.		1	2	3	4	5	6	7	8	9	10	11	12	13
Core identification	Insulator color	Orange	Orange	Yellow	Yellow	Green	Green	Gray	Gray	White	White	Orange	Orange	Yellow
	Mark type	1 point	1 point	1 point	1 point	1 point	1 point	1 point	1 point	1 point	1 point	2 points	2 points	2 points
	Mark color	Black	Red	Black	Red	Black	Red	Black	Red	Black	Red	Black	Red	Black
D sub-connector terminal No.		**14**	**15**	**16**	**17**	**18**	**19**	**20**	**21**	**22**	**23**	**24**	**25**	
Core identification	Insulator color	Yellow	Green	Green	Gray	Gray	White	White	Orange	Orange	Yellow	Yellow	Green	
	Mark type	2 points	2 points	2 points	2 points	2 points	2 points	2 points	3 points	3 points	3 points	3 points	3 points	
	Mark color	Red	Black	Red	Black	Red	Black	Red	Black	Red	Black	Red	Black	

● N4T-CABLE-D01-Ⓑ

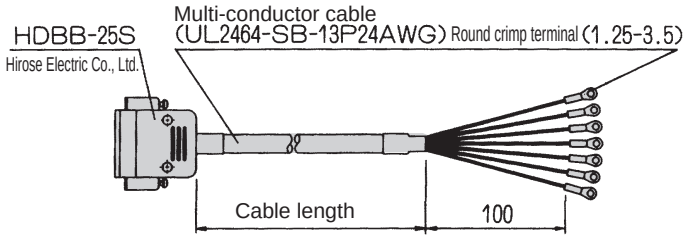

D sub-connector terminal No.		1	2	3	4	5	6	7	8	9	10	11	12	13
Core identification	Insulator color	Orange	Orange	Yellow	Yellow	Green	Green	Gray	Gray	White	White	Orange	Orange	Yellow
	Mark type	1 point	1 point	1 point	1 point	1 point	1 point	1 point	1 point	1 point	1 point	2 points	2 points	2 points
	Mark color	Black	Red	Black	Red	Black	Red	Black	Red	Black	Red	Black	Red	Black
Mark tube No.		1	2	3	4	5	6	7	8	9	10	11	12	13
D sub-connector terminal No.		**14**	**15**	**16**	**17**	**18**	**19**	**20**	**21**	**22**	**23**	**24**	**25**	
Core identification	Insulator color	Yellow	Green	Green	Gray	Gray	White	White	Orange	Orange	Yellow	Yellow	Green	
	Mark type	2 points	2 points	2 points	2 points	2 points	2 points	2 points	3 points	3 points	3 points	3 points	3 points	
	Mark color	Red	Black	Red	Black	Red	Black	Red	Black	Red	Black	Red	Black	
Mark tube No.		14	15	16	17	18	19	20	21	22	23	24	25	

* Up to 24 points can be used. Cut the wires for surplus points before use.

Flat cable connector: wiring method T50

T50 Connectors

The connector used for T50 wiring method complies with MIL Standards (MIL-C-83503).
Wiring work is simplified with the pressure welded flat cable.
Pin numbers are assigned differently based on the PLC manufacturer, but the function assignment is the same. Arrange using connectors and the triangular mark (▼) in the table below for reference. The ▼ mark is the reference for both plug and socket.

Precautions for connector T50

(1) Signal arrays of the PLC output unit must match signal arrays on the valve side. Direct connections with the PLC are limited. Use the dedicated cable for each PLC manufacturer.
(2) The working power is 12/24 VDC dedicated.
(3) When connecting the T50 to a general output unit, use the + terminal (20, 10) of the 20P connector as the plus side common, and use the NPN transistor output open collector for the drive circuit.
(4) Never connect this manifold to the input unit, as major failures could occur in this device and in peripherals. Be sure to connect the manifold to the output unit.
(5) A voltage drop may occur due to simultaneous energizing or cable length. Confirm that the voltage drop for the solenoid is within 10% of the rated voltage.

■ The manifold station numbers are counted as station 1, station 2, station 3 and so forth starting from the wiring block side. The counting direction differs for the T50 and T50R.

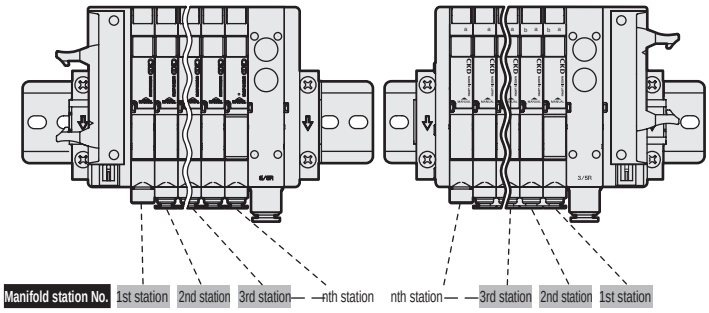

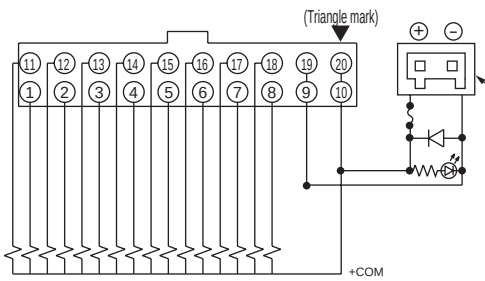

Feed connector
WAG0 Connector plug
733-102
(Attached with product)

Replacement fuse
LM16, Daito Communication Apparatus Co., Ltd.
(CKD part No. 4T9-LM16)

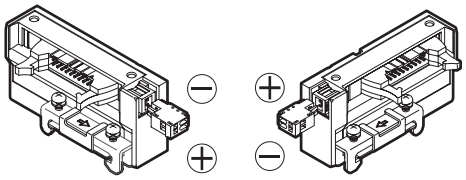

Polarity of feed connector

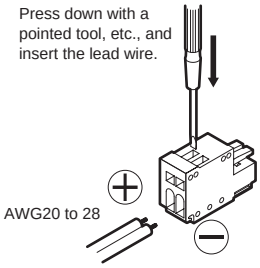

How to wire

T50 connector pin array (example)

*1 The numerals of valve numbers 1a, 1b, 2a, 2b ... indicate the order of stations first station, second station... and the letters “a” and “b” indicate the “a side” solenoid and “b side” solenoid, respectively. The manifold’s max. station number differs depending on the model. Check the specifications of each model.

Connector pin No.

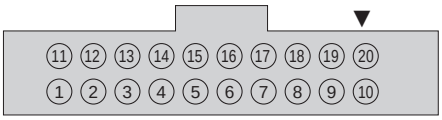

[Standard wiring]

● For single solenoid valve only

Pin No.	11	12	13	14	15	16	17	18	19	20
Valve No.	9a	10a	11a	12a	13a	14a	15a	16a	- Power supply	+ Power supply
Pin No.	**1**	**2**	**3**	**4**	**5**	**6**	**7**	**8**	**9**	**10**
Valve No.	1a	2a	3a	4a	5a	6a	7a	8a	- Power supply	+ Power supply

● For double solenoid valve only

Pin No.	11	12	13	14	15	16	17	18	19	20
Valve No.	5a	5b	6a	6b	7a	7b	8a	8b	- Power supply	+ Power supply
Pin No.	**1**	**2**	**3**	**4**	**5**	**6**	**7**	**8**	**9**	**10**
Valve No.	1a	1b	2a	2b	3a	3b	4a	4b	- Power supply	+ Power supply

● For mixed use (single/double mixture)

Pin No.	11	12	13	14	15	16	17	18	19	20
Valve No.	7a	7b	8a	9a	10a	10b	11a	11b	- Power supply	+ Power supply
Pin No.	**1**	**2**	**3**	**4**	**5**	**6**	**7**	**8**	**9**	**10**
Valve No.	1a	2a	3a	3b	4a	4b	5a	6a	- Power supply	+ Power supply

[Double wiring]

Pin No.	11	12	13	14	15	16	17	18	19	20
Valve No.	5a	(Blank)	6a	(Blank)	7a	(Blank)	8a	(Blank)	- Power supply	+ Power supply
Pin No.	**1**	**2**	**3**	**4**	**5**	**6**	**7**	**8**	**9**	**10**
Valve No.	1a	(Blank)	2a	(Blank)	3a	(Blank)	4a	(Blank)	- Power supply	+ Power supply

Pin No.	11	12	13	14	15	16	17	18	19	20
Valve No.	5a	(Blank)	6a	(Blank)	7a	7b	8a	(Blank)	- Power supply	+ Power supply
Pin No.	**1**	**2**	**3**	**4**	**5**	**6**	**7**	**8**	**9**	**10**
Valve No.	1a	(Blank)	2a	(Blank)	3a	3b	4a	4b	- Power supply	+ Power supply

Flat cable connector: wiring method T51

T51 Connectors

The connector used for T51 wiring method complies with MIL Standards (MIL-C-83503).
Wiring work is simplified with the pressure welded flat cable.
Pin numbers are assigned differently based on the PLC manufacturer, but the function assignment is the same.
Arrange using connectors and the triangular mark (▼) in the table below for reference. The triangular mark (▼) is the reference for both plug and socket.

■ The manifold station numbers are counted as station 1, station 2, station 3 and so forth starting from the wiring block side. The counting direction differs for the T51 and T51R types.

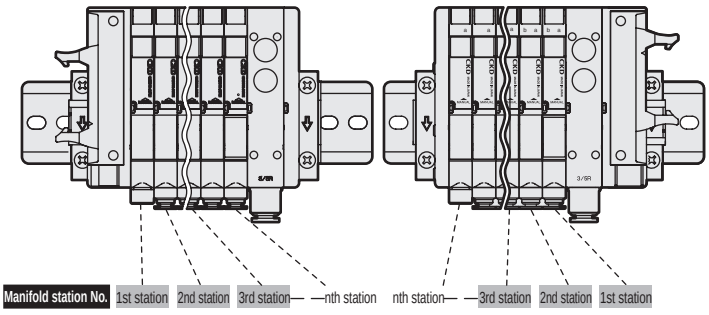

Precautions for connector (T51)

(1) Signal arrays of the PLC output unit must match signal arrays on the valve side.
(2) The working power is 12/24 VDC dedicated.
(3) The T51 is driven with a general output unit.
(4) Never connect this manifold to the input unit, as major failures could occur in this device and in peripherals. Be sure to connect the manifold to the output unit.
(5) A voltage drop may occur due to simultaneous energizing or cable length. Confirm that the voltage drop for the solenoid is within 10% of the rated voltage.

* When using the valve block with individual power supply function (AUX), type with low exoergic/energy-saving circuit, energizing is limited to the plus common.

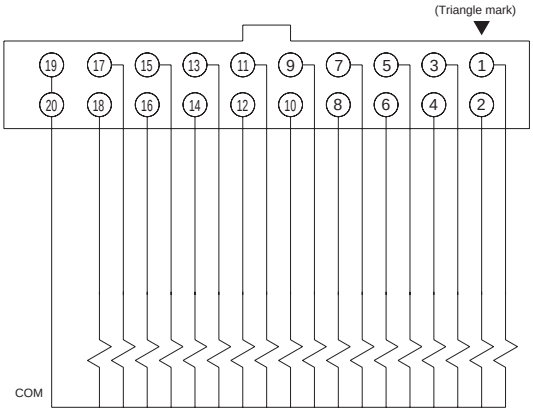

T51 connector pin array (example)

*1 The numerals of valve numbers 1a, 1b, 2a, 2b ... indicate the order of stations first station, second station... and the letters “a” and “b” indicate the “a side” solenoid and “b side” solenoid, respectively. The manifold’s max. station number differs depending on the model. Check the specifications of each model.

Connector pin No.

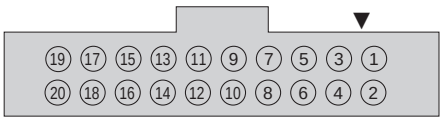

● For single solenoid valve only

[Standard wiring]

Pin No.	19	17	15	13	11	9	7	5	3	1
Valve No.	COM	17a	15a	13a	11a	9a	7a	5a	3a	1a
Pin No.	**20**	**18**	**16**	**14**	**12**	**10**	**8**	**6**	**4**	**2**
Valve No.	COM	18a	16a	14a	12a	10a	8a	6a	4a	2a

[Double wiring]

Pin No.	19	17	15	13	11	9	7	5	3	1
Valve No.	COM	9a	8a	7a	6a	5a	4a	3a	2a	1a
Pin No.	**20**	**18**	**16**	**14**	**12**	**10**	**8**	**6**	**4**	**2**
Valve No.	COM	(Blank)	(Blank)	(Blank)	(Blank)	(Blank)	(Blank)	(Blank)	(Blank)	(Blank)

● For double solenoid valve only

Pin No.	19	17	15	13	11	9	7	5	3	1
Valve No.	COM	9a	8a	7a	6a	5a	4a	3a	2a	1a
Pin No.	**20**	**18**	**16**	**14**	**12**	**10**	**8**	**6**	**4**	**2**
Valve No.	COM	9b	8b	7b	6b	5b	4b	3b	2b	1b

● For mixed use (single/double mixture)

Pin No.	19	17	15	13	11	9	7	5	3	1
Valve No.	COM	12a	11a	10a	8a	7a	5a	4a	3a	1a
Pin No.	**20**	**18**	**16**	**14**	**12**	**10**	**8**	**6**	**4**	**2**
Valve No.	COM	13a	11b	10b	9a	7b	6a	4b	3b	2a

Pin No.	19	17	15	13	11	9	7	5	3	1
Valve No.	COM	9a	8a	7a	6a	5a	4a	3a	2a	1a
Pin No.	**20**	**18**	**16**	**14**	**12**	**10**	**8**	**6**	**4**	**2**
Valve No.	COM	(Blank)	(Blank)	7b	(Blank)	(Blank)	4b	3b	(Blank)	(Blank)

Flat cable connector: wiring method T52

T52 Connectors

The connector used for T52 wiring method complies with MIL Standards (MIL-C-83503).
Wiring work is simplified with the pressure welded flat cable.
Pin numbers are assigned differently based on the PLC manufacturer, but the function assignment is the same. Arrange using connectors and the triangular mark (▼) in the table below for reference. The triangular mark (▼) is the reference for both plug and socket.

* When using the valve block with individual power supply function (AUX), type with low exoergic/energy-saving circuit, energizing is limited to the plus common.

Precautions for connector (T52)

(1) Signal arrays of the PLC output unit must match signal arrays on the valve side.
(2) The working power is 12/24 VDC dedicated.
(3) The T52 is driven with a general output unit.
(4) Never connect this manifold to the input unit, as major failures could occur in this device and in peripherals. Be sure to connect the manifold to the output unit.
(5) A voltage drop may occur due to simultaneous energizing or cable length. Confirm that the voltage drop for the solenoid is within 10% of the rated voltage.

Connector pin array diagram (top view) and internal circuit diagram

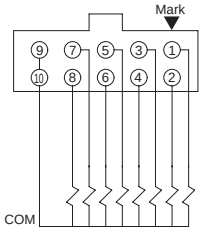

■ The manifold station numbers are counted as station 1, station 2, station 3 and so forth starting from the wiring block side. The counting direction differs for the T52 and T52R.

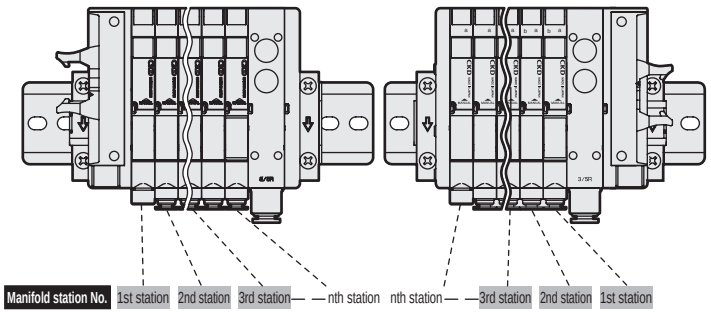

T52 connector pin array (example)

*1 The numerals of valve numbers 1a, 1b, 2a, 2b ... indicate the order of stations first station, second station... and the letters “a” and “b” indicate the “a side” solenoid and “b side” solenoid, respectively. The manifold’s max. station number differs depending on the model. Check the specifications of each model.

Connector pin No.

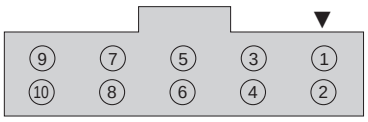

● For single solenoid valve only

[Standard wiring]

Pin No.	9	7	5	3	1
Valve No.	COM	7a	5a	3a	1a
Pin No.	**10**	**8**	**6**	**4**	**2**
Valve No.	COM	8a	6a	4a	2a

[Double wiring]

Pin No.	9	7	5	3	1
Valve No.	COM	4a	3a	2a	1a
Pin No.	**10**	**8**	**6**	**4**	**2**
Valve No.	COM	(Blank)	(Blank)	(Blank)	(Blank)

● For double solenoid valve only

Pin No.	9	7	5	3	1
Valve No.	COM	4a	3a	2a	1a
Pin No.	**10**	**8**	**6**	**4**	**2**
Valve No.	COM	4b	3b	2b	1b

● For mixed use (single/double mixture)

Pin No.	9	7	5	3	1
Valve No.	COM	5b	4b	3a	1a
Pin No.	**10**	**8**	**6**	**4**	**2**
Valve No.	COM	6a	5a	4a	2a

Pin No.	9	7	5	3	1
Valve No.	COM	4a	3a	2a	1a
Pin No.	**10**	**8**	**6**	**4**	**2**
Valve No.	COM	4b	(Blank)	(Blank)	(Blank)

Flat cable connector: wiring method T53

T53 Connectors

The connector used for T53 wiring method complies with MIL Standards (MIL-C-83503).
Wiring work is simplified with the pressure welded flat cable.
Pin numbers are assigned differently based on the PLC manufacturer, but the function assignment is the same.
Arrange using connectors and the triangular mark (▼) in the table below for reference. The triangular mark (▼) is the reference for both plug and socket.

* When using the valve block with individual power supply function (AUX), type with low exoergic/energy-saving circuit, energizing is limited to the plus common.

Precautions for connector (T53)

(1) Signal arrays of the PLC output unit must match signal arrays on the valve side.
(2) The working power is 12/24 VDC dedicated.
(3) The T53 is driven with a general output unit.
(4) Never connect this manifold to the input unit, as major failures could occur in this device and in peripherals. Be sure to connect the manifold to the output unit.
(5) A voltage drop may occur due to simultaneous energizing or cable length. Confirm that the voltage drop for the solenoid is within 10% of the rated voltage.

Connector pin layout diagram (top view) and internal circuit diagram

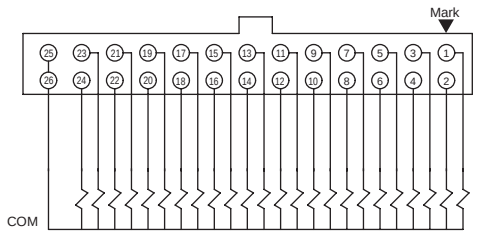

■ The manifold station numbers are counted as station 1, station 2, station 3 and so forth starting from the wiring block side. The counting direction differs for the T53 and T53R.

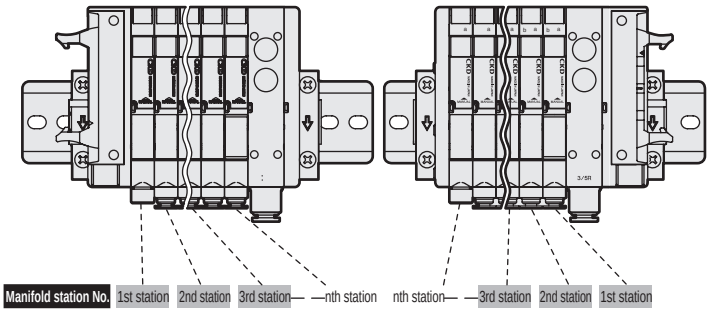

T53 connector pin array (example)

*1 The numerals of valve numbers 1a, 1b, 2a, 2b ... indicate the order of stations first station, second station... and the letters “a” and “b” indicate the “a side” solenoid and “b side” solenoid, respectively.
The manifold’s max. station number differs depending on the model. Check the specifications of each model.

Connector pin No.

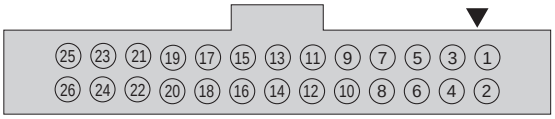

● For single solenoid valve only

[Standard wiring]

Pin No.	25	23	21	19	17	15	13	11	9	7	5	3	1
Valve No.	COM	23a	21a	19a	17a	15a	13a	11a	9a	7a	5a	3a	1a
Pin No.	**26**	**24**	**22**	**20**	**18**	**16**	**14**	**12**	**10**	**8**	**6**	**4**	**2**
Valve No.	COM	24a	22a	20a	18a	16a	14a	12a	10a	8a	6a	4a	2a

[Double wiring]

Pin No.	25	23	21	19	17	15	13	11	9	7	5	3	1
Valve No.	COM	12a	11a	10a	9a	8a	7a	6a	5a	4a	3a	2a	1a
Pin No.	**26**	**24**	**22**	**20**	**18**	**16**	**14**	**12**	**10**	**8**	**6**	**4**	**2**
Valve No.	COM	(Blank)	(Blank)	(Blank)	(Blank)	(Blank)	(Blank)	(Blank)	(Blank)	(Blank)	(Blank)	(Blank)	(Blank)

● For double solenoid valve only

Pin No.	25	23	21	19	17	15	13	11	9	7	5	3	1
Valve No.	COM	12a	11a	10a	9a	8a	7a	6a	5a	4a	3a	2a	1a
Pin No.	**26**	**24**	**22**	**20**	**18**	**16**	**14**	**12**	**10**	**8**	**6**	**4**	**2**
Valve No.	COM	12b	11b	10b	9b	8b	7b	6b	5b	4b	3b	2b	1b

● For mixed use (single/double mixture)

Pin No.	25	23	21	19	17	15	13	11	9	7	5	3	1
Valve No.	COM	16a	15a	14a	12a	10a	9a	8a	7a	5b	4b	3a	1a
Pin No.	**26**	**24**	**22**	**20**	**18**	**16**	**14**	**12**	**10**	**8**	**6**	**4**	**2**
Valve No.	COM	16b	15b	14b	13a	11a	9b	8b	7b	6a	5a	4a	2a

Pin No.	25	23	21	19	17	15	13	11	9	7	5	3	1
Valve No.	COM	12a	11a	10a	9a	8a	7a	6a	5a	4a	3a	2a	1a
Pin No.	**26**	**24**	**22**	**20**	**18**	**16**	**14**	**12**	**10**	**8**	**6**	**4**	**2**
Valve No.	COM	(Blank)	(Blank)	(Blank)	9b	8b	7b	(Blank)	5b	4b	(Blank)	(Blank)	(Blank)

Intermediate wiring block: Wiring method TM*

Precautions for TM wiring method

(1) Signal arrays of the PLC output unit must match signal arrays on the valve side.
(2) The working power is 12/24 VDC dedicated.
(3) The TM* is driven with a general output unit.
(4) Never connect this manifold to the input unit, as major failures could occur. Be sure to connect the manifold to the output unit.
(5) A voltage drop may occur due to simultaneous energizing or cable length.
Confirm that the voltage drop for the solenoid is within 10% of the rated voltage.

* When using the valve block with individual power supply function (AUX), type with low exoergic/ energy-saving circuit, energizing is limited to the plus common.

How to count stations

The manifold stations are counted from wiring block TM to the right with the wiring ports facing forward.

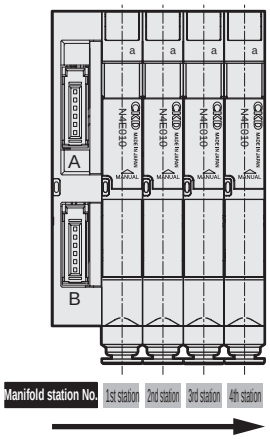

Wiring method TM1A

Connector for wiring method TM1A

RITS connector 6P (1473562-6) Tyco Electronics Japan G.K.
The pin No. 1 to 6 are stamped on the connector. Up to 10 points can be input as shown below.

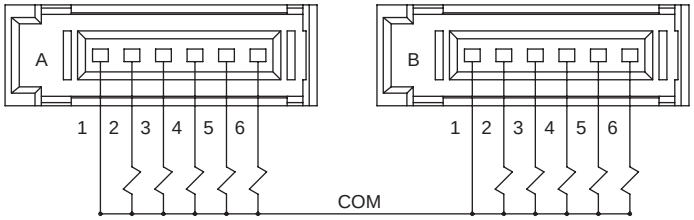

* When using the valve block with individual power supply function (AUX), type with low exoergic/energy-saving circuit, energizing is limited to the plus common.

TM1A connector pin array (example)

The numerals of valve numbers 1a, 1b, 2a, 2b ... indicate the order of stations first station, second station... and the letters “a” and “b” indicate the “a side” solenoid and “b side” solenoid, respectively.
The manifold’s max. station number differs depending on the model, with a maximum of 10 solenoid (coil) points.

● For single solenoid valve only

[Standard wiring]

	Connector A						Connector B					
Pin No.	1	2	3	4	5	6	1	2	3	4	5	6
Valve No.	COM	1a	2a	3a	4a	5a	COM	6a	7a	8a	9a	10a

[Double wiring]

	Connector A						Connector B					
Pin No.	1	2	3	4	5	6	1	2	3	4	5	6
Valve No.	COM	1a	(Blank)	2a	(Blank)	3a	COM	(Blank)	4a	(Blank)	5a	(Blank)

● For double solenoid valve only

	Connector A						Connector B					
Pin No.	1	2	3	4	5	6	1	2	3	4	5	6
Valve No.	COM	1a	1b	2a	2b	3a	COM	3b	4a	4b	5a	5b

● For mixed use (single/double mixture)

	Connector A						Connector B					
Pin No.	1	2	3	4	5	6	1	2	3	4	5	6
Valve No.	COM	1a	2a	2b	3a	4a	COM	5a	5b	6a	7a	7b

	Connector A						Connector B					
Pin No.	1	2	3	4	5	6	1	2	3	4	5	6
Valve No.	COM	1a	(Blank)	2a	2b	3a	COM	(Blank)	4a	(Blank)	5a	5b

Wiring method TM1C

Connector for wiring method TM1C

RITS connector 6P (1473562-6) Tyco Electronics Japan G.K.
The pin No. 1 to 6 are stamped on the connector. Up to 5 points can be input as shown below.

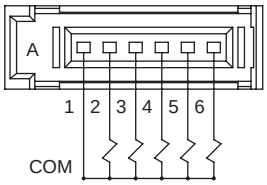

* When using the valve block with individual power supply function (AUX), with low exoergic/energy-saving circuit, energizing is limited to the plus common.

TM1C connector pin array (example)

The numerals of valve numbers 1a, 1b, 2a, 2b ... indicate the order of stations first station, second station... and the letters “a” and “b” indicate the “a side” solenoid and “b side” solenoid, respectively.
The manifold’s max. station number differs depending on the model, with a maximum of 5 solenoid (coil) points.

● For single solenoid valve only

[Standard wiring]

Pin No.	1	2	3	4	5	6
Valve No.	COM	1a	2a	3a	4a	5a

[Double wiring]

Pin No.	1	2	3	4	5	6
Valve No.	COM	1a	(Blank)	2a	(Blank)	(Blank)

● For double solenoid valve only

Pin No.	1	2	3	4	5	6
Valve No.	COM	1a	1b	2a	2b	(Blank)

● Mix
For (single/double mixture)

Pin No.	1	2	3	4	5	6
Valve No.	COM	1a	2a	2b	3a	4a

Pin No.	1	2	3	4	5	6
Valve No.	COM	1a	(Blank)	2a	2b	3a

Wiring method TM52

Connector for wiring method TM52

10-pin flat cable connector compliant with MIL standards (MIL-C-83503)
Pin numbers 1 to 10 are set on the connector starting at the ▼ reference mark as shown in the figure below. Up to 8 points can be input.

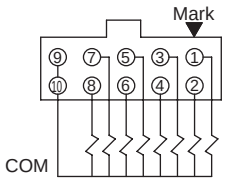

* When using the valve block with individual power supply function (AUX), type with low exoergic/energy-saving circuit, energizing is limited to the plus common.

TM52 connector pin array (example)

The numerals of valve numbers 1a, 1b, 2a, 2b ... indicate the order of stations first station, second station... and the letters “a” and “b” indicate the “a side” solenoid and “b side” solenoid, respectively.
The manifold’s max. station number differs depending on the model, with a maximum of 8 solenoid (coil) points.

● For single solenoid valve only

[Standard wiring]

Pin No.	1	2	3	4	5	6	7	8	9	10
Valve No.	1a	2a	3a	4a	5a	6a	7a	8a	COM	

[Double wiring]

Pin No.	1	2	3	4	5	6	7	8	9	10
Valve No.	1a	(Blank)	2a	(Blank)	3a	(Blank)	4a	(Blank)	COM	

● For double solenoid valve only

Pin No.	1	2	3	4	5	6	7	8	9	10
Valve No.	1a	1b	2a	2b	3a	3b	4a	4b	COM	

● For mixed use (single/double mixture)

Pin No.	1	2	3	4	5	6	7	8	9	10
Valve No.	1a	2a	2b	3a	4a	5a	5b	6a	COM	

Pin No.	1	2	3	4	5	6	7	8	9	10
Valve No.	1a	(Blank)	2a	2b	3a	(Blank)	4a	(Blank)	COM	

Wiring block mix

How to count stations

The manifold station numbers are set with the piping port facing forward

- ·Left wiring blocks (T30, T50, T51, T52, T53)
- ·Intermediate wiring block (TM1A, TM1C, TM52)

} are counted from left to right.

- ·Right wiring blocks (T30R, T50R, T51R, T52R, T53R) are counted from right to left.

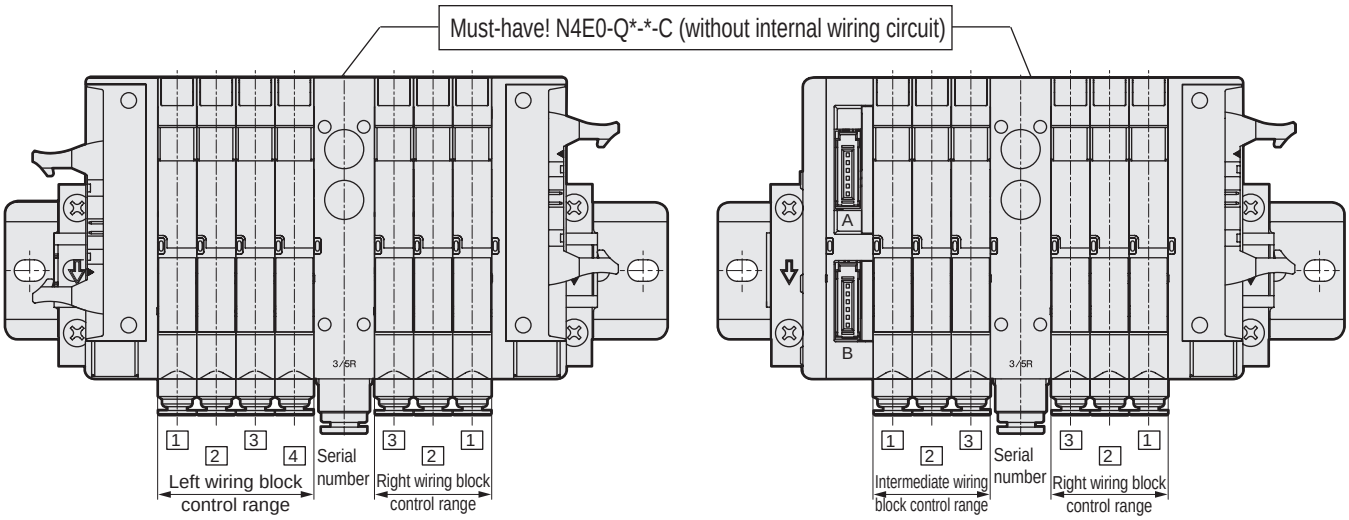

When mixing the right wiring block with another wiring block, the left/right wiring block circuits may connect via the manifold and result in unexpected valve operation. Be sure to install the “N4E0-Q*-*-C type without supply and exhaust block internal wiring circuit” at the end of the right wiring block control station, so that the left and right wiring in the manifold are not connected.

MEMO

Serial transmission: Wiring method T6G1

T6G1 serial transmission

- The device unit's output No. differs with the manufacturer. The connector pin No. and the manifold solenoid correspond as shown below.
- Station manifolds are set in order from the left with the piping port facing forward regardless of the wiring block position.
- Internal connectors are wired in order, so there may be some blank numbers depending on the number of stations. These blank outputs cannot be used to drive other than the solenoid manifolds in use.
- The working power is 24 VDC.
- A device unit for each communication system is used. Contact CKD for usable PLC models, host unit model numbers and communication system specifications. (Refer to page 949)
- Output number differs by PLC manufacturer, but the function assignment is the same. Arrange using connectors and the triangular mark (▼) in the table below for reference. The ▼ mark is the reference for both plug and socket.

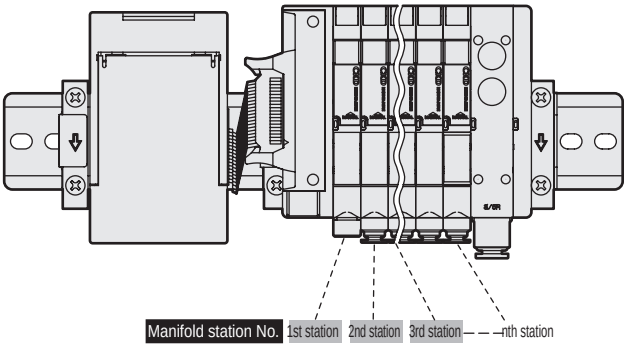

Correspondence of output No. and connector pin No.

● T6G1

Output No.	0	1	2	3	4	5	6	7	8	9	A	B	C	D	E	F
Connector pin No.	1	2	3	4	5	6	7	8	11	12	13	14	15	16	17	18

T6G1 connector pin array (example)

*1 The numerals of valve numbers 1a, 1b, 2a, 2b ... indicate the order of stations first station, second station... and the letters "a" and "b" indicate the "a side" solenoid and "b side" solenoid, respectively. The manifold's max. station number differs depending on the model. Check the specifications of each model.

Connector pin No.

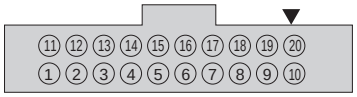

● For single solenoid valve only

[Standard wiring]

Pin No.	11	12	13	14	15	16	17	18	19	20
Valve No.	9a	10a	11a	12a	13a	14a	15a	16a		+COM
Pin No.	**1**	**2**	**3**	**4**	**5**	**6**	**7**	**8**	**9**	**10**
Valve No.	1a	2a	3a	4a	5a	6a	7a	8a		+COM

[Double wiring]

Pin No.	11	12	13	14	15	16	17	18	19	20
Valve No.	5a	(Blank)	6a	(Blank)	7a	(Blank)	8a	(Blank)		+COM
Pin No.	**1**	**2**	**3**	**4**	**5**	**6**	**7**	**8**	**9**	**10**
Valve No.	1a	(Blank)	2a	(Blank)	3a	(Blank)	4a	(Blank)		+COM

● For double solenoid valve only

Pin No.	11	12	13	14	15	16	17	18	19	20
Valve No.	5a	5b	6a	6b	7a	7b	8a	8b		+COM
Pin No.	**1**	**2**	**3**	**4**	**5**	**6**	**7**	**8**	**9**	**10**
Valve No.	1a	1b	2a	2b	3a	3b	4a	4b		+COM

● For mixed use (single/double mixture)

Pin No.	11	12	13	14	15	16	17	18	19	20
Valve No.	7a	7b	8a	9a	10a	10b	11a	11b		+COM
Pin No.	**1**	**2**	**3**	**4**	**5**	**6**	**7**	**8**	**9**	**10**
Valve No.	1a	2a	3a	3b	4a	4b	5a	6a		+COM

Pin No.	11	12	13	14	15	16	17	18	19	20
Valve No.	5a	(Blank)	6a	(Blank)	7a	7b	8a	(Blank)		+COM
Pin No.	**1**	**2**	**3**	**4**	**5**	**6**	**7**	**8**	**9**	**10**
Valve No.	1a	(Blank)	2a	(Blank)	3a	3b	4a	4b		+COM

	LED display	Wiring method
T6G1	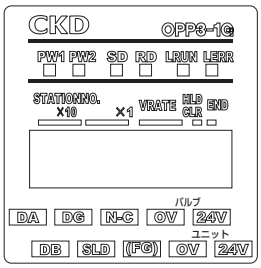	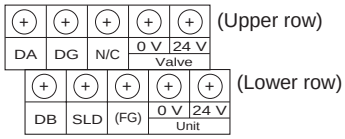 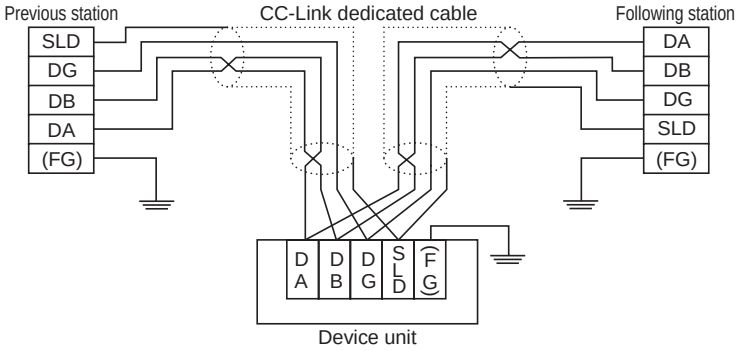

LED name	Display description
PW1	Lights when unit power is ON.
PW2	Lights when valve power is ON.
SD	Lights when transmitting data.
RD	Lights when receiving data.
L RUN	Lights when receiving normal data, and turns OFF at timeover. (Lights when receiving normal data.)
L ERR	Lights when transmission error occurs. Turns OFF when time has lapsed. Lights when the station No. setting or transmission speed setting is incorrect. Blinks when station No. or transmission speed in setting changes.

Serial transmission: Wiring method T7*

T7* serial transmission

- Refer to the table below, as device unit I/O numbers differ according to PLC manufacturer.
- The device unit I/O numbers correspond to the manifold solenoids as shown below.
- Solenoid valve manifold station numbers are configured in order from the left, with the piping port in the front.
- The working power is 24 VDC.
- A device unit for each communication system is used. Contact CKD for usable PLC models, host unit model numbers and communication system specifications. (Refer to page 949)
- Securely tighten each connector (power/communication) after inserting into the product. Close the cover after completing the address settings, etc. (Recommended tightening torque 0.25 N·m for power supply, 0.3 N·m for communication)

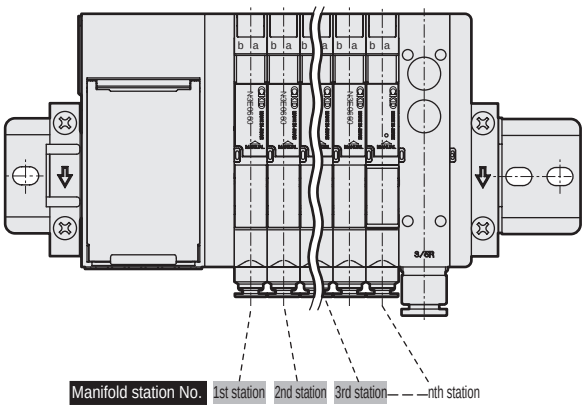

Correspondence of PLC addresses and serial transmission device unit I/O numbers

(1) For hexadecimal notation

Serial transmission device unit I/O No.	0	1	2	3	4	5	6	7	8	9	10	11	12	13	14	15	16	17	18	19	20	21	22	23	24	25	26	27	28	29	30	31
CC-Link DeviceNet S-LINK V EtherCAT	Y00	Y01	Y02	Y03	Y04	Y05	Y06	Y07	Y08	Y09	Y0A	Y0B	Y0C	Y0D	Y0E	Y0F	Y10	Y11	Y12	Y13	Y14	Y15	Y16	Y17	Y18	Y19	Y1A	Y1B	Y1C	Y1D	Y1E	Y1F

(2) For decimal notation

Serial transmission device unit I/O No.	0	1	2	3	4	5	6	7	8	9	10	11	12	13	14	15	16	17	18	19	20	21	22	23	24	25	26	27	28	29	30	31
CC-Link DeviceNet S-LINK V EtherCAT	Y0																Y1															
	00	01	02	03	04	05	06	07	08	09	10	11	12	13	14	15	00	01	02	03	04	05	06	07	08	09	10	11	12	13	14	15

Y** indicates output.

Solenoid output No. corresponding to serial transmission device unit I/O No.

Device unit	Max. solenoids	Serial transmission device unit I/O No. 0	1	2	3	4	5	6	7	8	9	10	11	12	13	14	15	16	17	18	19	20	21	22	23	24	25	26	27	28	29	30	31
·T7G1 (CC-Link) ·T7D1 (DeviceNet) ·T7N1 (S-LINK V) ·T7EC1 (EtherCAT)	16 points	s1	s2	s3	s4	s5	s6	s7	s8	s9	s10	s11	s12	s13	s14	s15	s16																
·T7G2 (CC-Link) ·T7D2 (DeviceNet) ·T7N2 (S-LINK V) ·T7EC2 (EtherCAT)	32 points	s1	s2	s3	s4	s5	s6	s7	s8	s9	s10	s11	s12	s13	s14	s15	s16	s17	s18	s19	s20	s21	s22	s23	s24	s25	s26	s27	s28	s29	s30	s31	s32

Valve No. layout corresponding to wiring method T7* solenoid output No. (example)

* The numerals of valve numbers 1a, 1b, 2a, 2b ... indicate the order of stations first station, second station... and the letters “a” and “b” indicate the “a side” solenoid and “b side” solenoid, respectively.
The manifold’s max. station number differs depending on the model. Check the specifications of each model.

[Standard wiring]

- For single solenoid valve (Max. 16 stations)

Solenoid output No.	s1	s2	s3	4s	s5	s6	s7	s8	s9	s10	s11	s12	s13	s14	s15	s16	s17	s18	s19	s20	s21	s22	s23	s24	s25	s26	s27	s28	s29	s30	s31	s32
Valve No.	1a	2a	3a	4a	5a	6a	7a	8a	9a	10a	11a	12a	13a	14a	15a	16a																

- For double solenoid valve

Solenoid output No.	s1	s2	s3	4s	s5	s6	s7	s8	s9	s10	s11	s12	s13	s14	s15	s16	s17	s18	s19	s20	s21	s22	s23	s24	s25	s26	s27	s28	s29	s30	s31	s32
Valve No.	1a	1b	2a	2b	3a	3b	4a	4b	5a	5b	6a	6b	7a	7b	8a	8b	9a	9b	10a	10b	11a	11b	12a	12b	13a	13b	14a	14b	15a	15b	16a	16b

- For mixed use (single/double mixture) (Max. 16 stations)

Solenoid output No.	s1	s2	s3	4s	s5	s6	s7	s8	s9	s10	s11	s12	s13	s14	s15	s16	s17	s18	s19	s20	s21	s22	s23	s24	s25	s26	s27	s28	s29	s30	s31	s32
Valve No.	1a	2a	3a	3b	4a	4b	5a	6a	7a	7b	8a	9a	10a	10b	11a	11b	12a	13a	14a	14b	15a	15b	16a									

[Double wiring]

- For single solenoid valve

Solenoid output No.	s1	s2	s3	4s	s5	s6	s7	s8	s9	s10	s11	s12	s13	s14	s15	s16	s17	s18	s19	s20	s21	s22	s23	s24	s25	s26	s27	s28	s29	s30	s31	s32
Valve No.	1a	(Blank)	2a	(Blank)	3a	(Blank)	4a	(Blank)	5a	(Blank)	6a	(Blank)	7a	(Blank)	8a	(Blank)	9a	(Blank)	10a	(Blank)	11a	(Blank)	12a	(Blank)	13a	(Blank)	14a	(Blank)	15a	(Blank)	16a	(Blank)

- For mixed use (single/double mixture)

Solenoid output No.	s1	s2	s3	4s	s5	s6	s7	s8	s9	s10	s11	s12	s13	s14	s15	s16	s17	s18	s19	s20	s21	s22	s23	s24	s25	s26	s27	s28	s29	s30	s31	s32
Valve No.	1a	(Blank)	2a	(Blank)	3a	3b	4a	4b	5a	(Blank)	6a	(Blank)	7a	7b	8a	(Blank)	9a	(Blank)	10a	(Blank)	11a	11b	12a	12b	13a	(Blank)	14a	(Blank)	15a	15b	16a	(Blank)

T7D1 T7D2

LED display

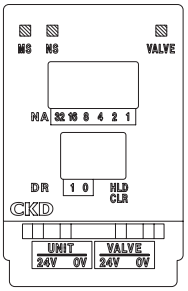

LED name	Display description
MS	Device status is indicated with green and red LEDs."Errors are indicated using combination with NS LED".
NS	Network status is indicated with green and red LEDs."Errors are indicated using combination with MS LED".

Wiring method

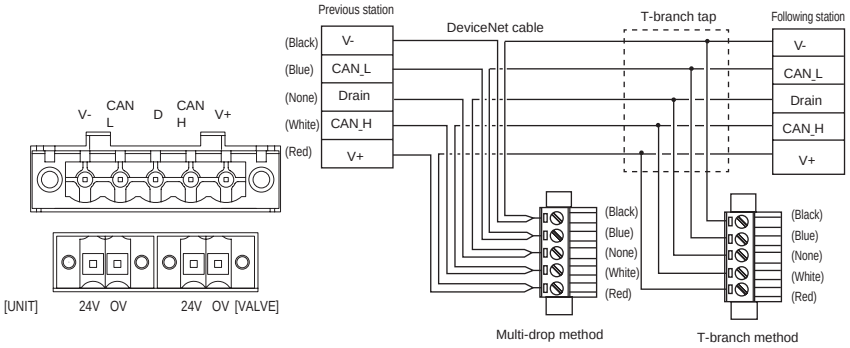

- Connect the power supply to the 2-pole connector.
- Connect the DeviceNet cable to the 5-pole connector.
- The power terminal (24 V, 0 V) is insulated from the communication power terminal (V+, V-).
- Wiring section connectors are attached.

T7G1 T7G2

LED display

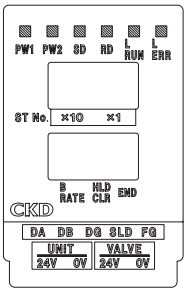

LED name	Display description
PW	Lights when power is ON.
SD	Lights when transmitting data.
RD	Lights when receiving data.
L RUN	Lights when receiving normal data. Turns OFF at time over.
L ERR	Lights when transmission error occurs. Turns OFF at time over.Lights when station No. or transmission speed setting fails.Blinks when station No. or transmission speed setting changes.

Wiring method

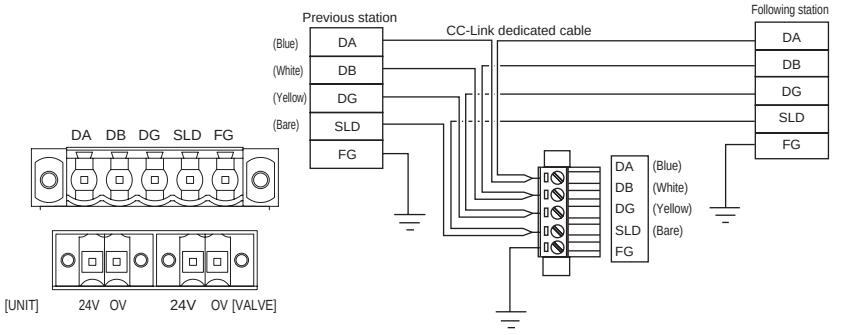

- Connect the power supply to the 2-pole connector.
- Connect the CC-Link cable to the 5-pole connector.
- Wiring section connectors are attached.

T7N1 T7N2

LED display

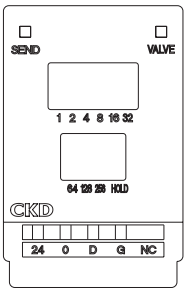

LED name	Display description
SEND	Blinks when receiving a synchronization signal from the S-LINK V controller.
VALVE	Lights when valve power supply is energized(Can be monitored only when the unit power is ON.)

Wiring method

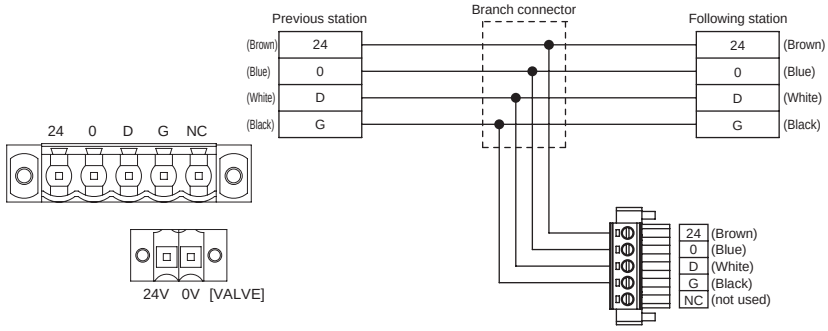

- Connect the power supply to the 2-pole connector.
- Connect the S-Link V cable to the 5-pole connector.
- Wiring section connectors are attached.

Note: Wiring connectors

Wiring connectors are attached with the product. However, connectors fitting the device unit side connectors listed below can be used.

	Device unit side connector model No.		Wiring side connector recommended model No. (attachment)	
	5-pole connector (communication)	2-pole connector (power supply)	5-pole connector (communication)	2-pole connector (power supply)
T7D (DeviceNet)	MSTB2.5/5-GF-5.08AU Phoenix Contact Corp.	SL3.5/2/90F Weidmüller Corp.	MSTB2.5/5-STF-5.08AUM Phoenix Contact Corp.	BL3.5/2F Weidmüller Corp.
T7G (CC-Link)	SL5.08HC/05/90F 3.2SN OR BX Weidmüller Corp.		BLZP5.08Hc/05/180F SN OR BX Weidmüller Corp.	
T7N (S-LINK V)				

Model No.	LED display	Wiring
T7EC1 T7EC2	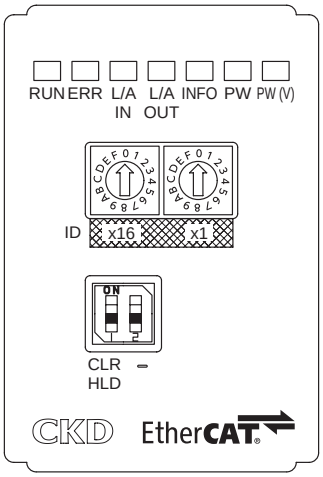	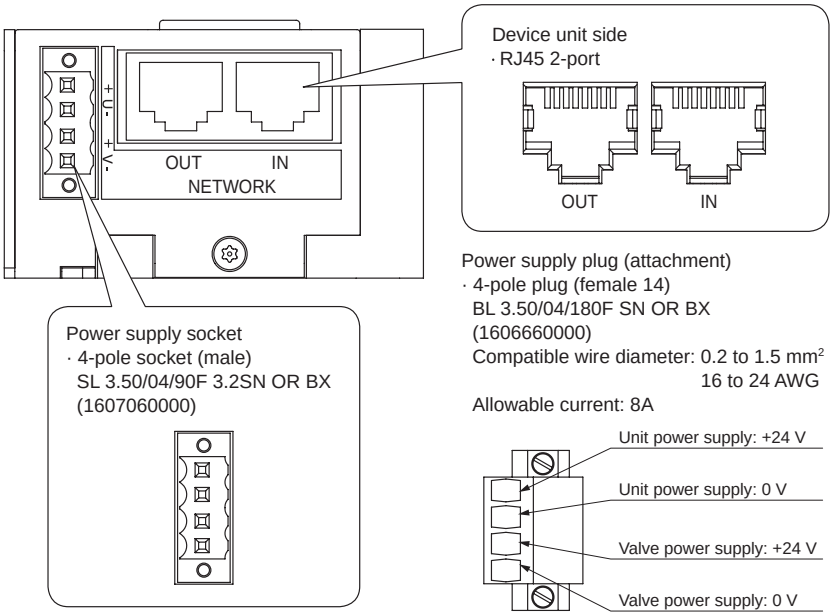

LED name	Display description
RUN	Communication status of EtherCAT indicated by LED (green) ON status (OFF/ON/blinking) (Green lamp ON during normal communication)
ERR	Abnormal status of EtherCAT indicated by LED (red) ON status (OFF/ON/ blinking) (Lamp OFF during normal communication)
L/A IN	Status of Ethernet port (IN side) indicated by LED (green) ON status (OFF/ON/rapid blinking)
L/A OUT	Status of Ethernet port (OUT side) indicated by LED (green) ON status (OFF/ON/rapid blinking)
INFO	Error status of device unit indicated by LED (red) (Lamp OFF when normal)
PW	ON when unit power supply is ON. Green lamp ON when normal
PW(V)	Lights when valve power supply is ON. Green lamp ON when normal (Cannot be monitored when unit power is not turned ON)

Communication connector pin array

Port	Pin	Signal name	Function
IN/OUT	1	TD+	Transmitted data, positive
	2	TD-	Transmitted data, negative
	3	RD+	Received data, positive
	4	Vacant	
	5	Vacant	
	6	RD-	Received data, negative
	7	Vacant	
	8	Vacant	

PLC compatibility table

Model No.	Manufacturer name (recommended organization)	Communication system name	Host unit model No.
T6G1	CC-Link Partner Association (CLPA)	CC-Link	Connected to each manufacturer's CC-Link compatible master
	Mitsubishi Electric Corporation		QJ61BT11N
T7D*	ODVA	DeviceNet	Connected to each manufacturer's DeviceNet compatible master
	OMRON Corporation		CJ1W-DRM21
T7G*	CC-Link Partner Association (CLPA)	CC-Link	Connected to each manufacturer's CC-Link compatible master
	Mitsubishi Electric Corporation		QJ61BT11N
T7N*	Panasonic Industrial Devices SUNX Co., Ltd.	S-LINK V	Connected to S-LINK V controller or various S-LINK V control boards
T7EC*	EtherCAT Technology Group	EtherCAT	Connected to EtherCAT-compatible master
	OMRON Corporation		NJ101 NJ301 NJ501 CJ1W-NC□82

CAUTION: For details on master units and models not listed above, contact each PLC manufacturer.

How to assemble / disassemble block manifold

⚠ CAUTION: Be sure to turn power OFF and release pressure before adding or removing the manifolds.

The procedures for changing the valve blocks, replacing the valve blocks due to service life, etc., adding the supply and exhaust blocks and changing/increasing the specifications using various pressure supply devices are explained below. Refer to the individual Instruction Manuals for details.

Turn OFF power and stop the air pressure source before starting the disassembly work. When the manifold has been disassembled and assembled, if the connection key is not correctly reset between the blocks or if the wiring and end block screws are insufficiently tightened, air could leak or malfunctions could result. Confirm that the connection keys are correctly reset between the blocks and that the blocks are securely fixed onto the DIN rail before supplying air. CKD recommends using identification marking when disconnecting the A and B port piping.

Replacing valve blocks and dummy blocks

① Loosen the DIN rail set screw on the end block.
② Using a thin tool, press down on the key connecting the valve block to be replaced and the blocks on both sides.

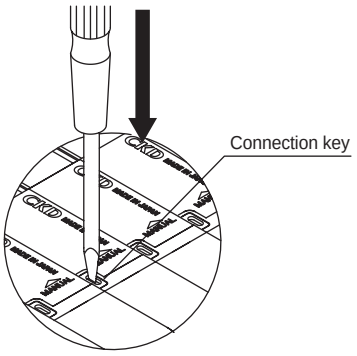

③ Slide the block to the end block side, and provide a space of 10 mm on each side of the block to be replaced.
Slide the valve block horizontally on the DIN rail.
⚠ Sliding it at an angle may damage the wiring connector.

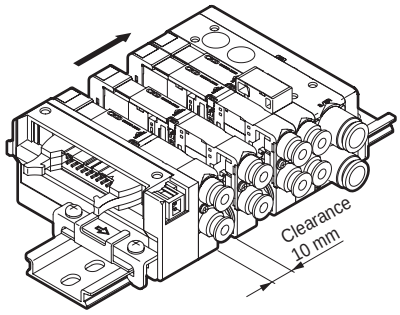

④ Lift up the block's wiring cover side, and pull toward the piping port side. The block will come off the DIN rail.

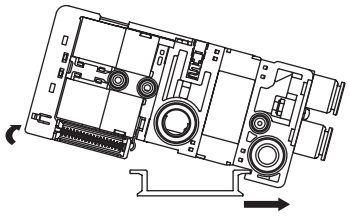

⑤ Replace with a new block.
⑥ Slide all of the blocks to the wiring block side on the DIN rail and assemble them in parallel so that there are no spaces between the blocks.
⑦ Confirm that the connection key has returned to the groove on the block.
⑧ Confirm that the end block's retainer claw is caught on both sides of the DIN rail, and then tighten the set screw with a screwdriver. Appropriate tightening torque is 1.4 N·m.

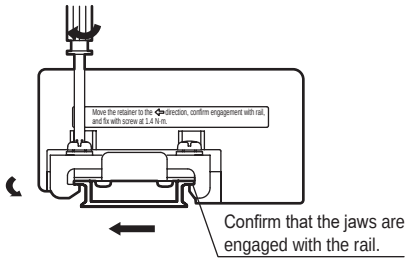

Increasing the valve blocks

① The blocks are added with the same procedures as replacing the valve blocks.
② If there are plans to add more blocks, designate the DIN rail length in the specifications sheet (page 957).

Mounting the supply and exhaust block

③ The blocks are added with the same procedures as replacing the valve blocks.

Replacing the cartridge fitting

① Remove the set screw.
② Pull out the stopper plate and fitting together.
③ Align the groove of the replacement fitting with the stopper plate and assemble them temporarily.
④ Assemble the stopper plate with the fitting, and tighten the mounting screw. Pull on the fitting to confirm that it is properly installed.

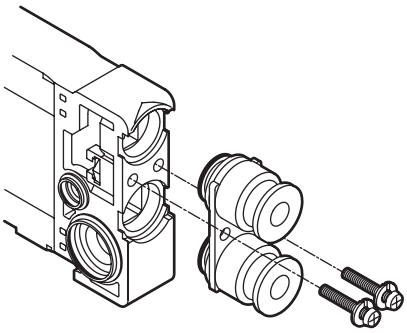

Tightening torque
Valve block: 0.22±0.02 N·m
Supply and exhaust block: 0.42±0.02 N·m

Checking after disassembly and assembly

Check the piping and confirm that it is correct. In particular, be careful of incorrect connections of the A, B-ports for piping.

How to disassemble/assemble regulator and regulator block

Caution: Be sure to turn power OFF and release the pressure before performing the following work.

The procedures for adding, disassembling and assembling regulator bodies and regulator blocks, due to specifications change or service life, are explained below. Contact CKD for details.
Confirm that the connection key between blocks and the stopper plate for the regulator block are securely assembled before use.

Regulator replacement

- Loosen the regulator body mounting screw, and lift the regulator upward and off.
- After replacing the regulator, confirm that the gasket has not deviated from the block grooves, and assemble in the original state. The appropriate tightening torque for the regulator body mounting screw is 0.5 to 0.8 N·m.

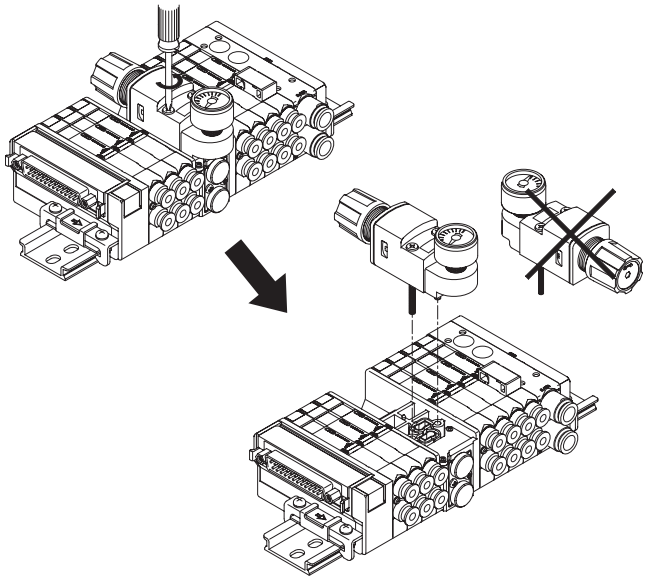

Regulator block replacement

- Loosen the DIN rail set screw on the end block.
- **Using a pointed tool, press down on the key connecting the regulator block** to be replaced and the blocks on both sides.
- **While holding down the connection key,** slide the block to the end block side, and provide a space of 10 mm on each side of the block to be replaced.

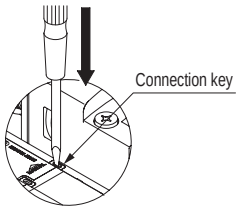

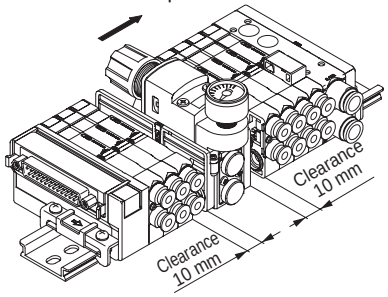

- Lift up the side opposite the block piping port, and pull toward the piping port side to remove the block from the DIN rail.

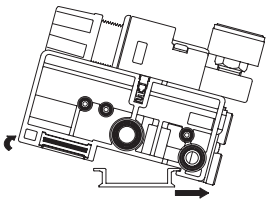

- Replace the block, and mount the blocks onto the DIN rail in the reverse order that they were removed.
- Slide all of the blocks to the wiring block side so that there are no spaces between the blocks.
- Confirm that the connection key has returned to the groove on the block.
- Slide the end block retainer in the port direction, and catch the claw onto the DIN rail. Confirm that the end block's retainer claw is engaged, and then tighten the set screw.
  The appropriate tightening torque is 1.4 to 1.5N·m.

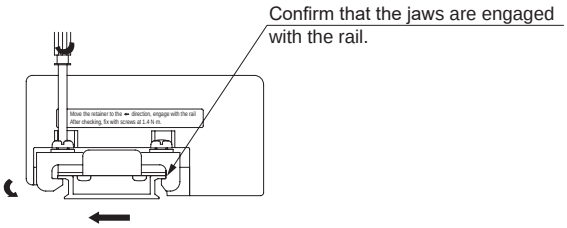

Replacing the cartridge fitting

- Remove the set screw.
- Pull out the stopper plate with the fitting.
- Align the groove of the replacement fitting with the stopper plate and assemble them temporarily.
- Assemble the stopper plate with the fitting, and tighten the mounting screw.
  The appropriate tightening torque is 0.4 to 0.45 N·m.
- After replacement, pull the fitting to check that it is installed securely.

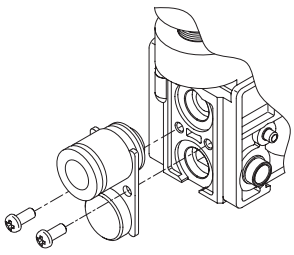

Built-in individual power supply function (AUX)

The type with individual power supply function (AUX) enables operation with a separate power supply of any arbitrary valve in manifolds which have already been connected with reduced wiring. This is effective when adjusting equipment, etc.

* MN3E0/MN4E0 only

① Valve block with built-in individual power supply function (AUX) Internal structure diagram

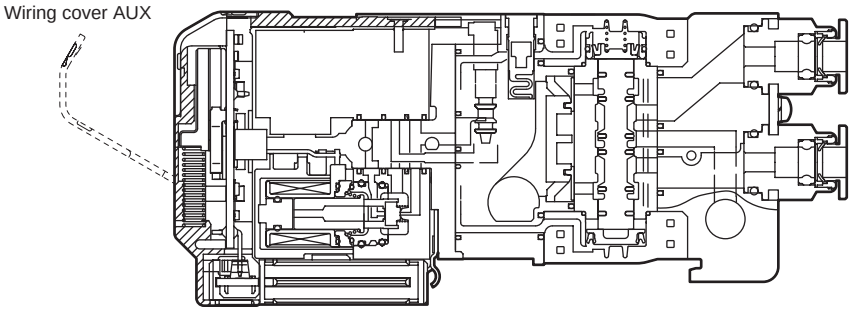

② Inputting individual power

Open the wiring cover and connect the power input socket (N4E0-SOCKET-S/D).

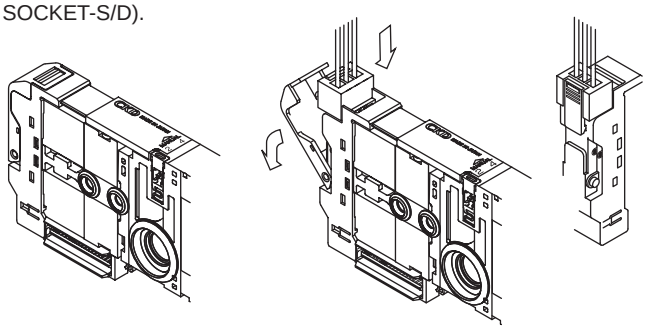

When the power input socket is connected, the wiring in the valve is temporarily separated from the reduced wiring in the manifold, and power can be supplied from an external source.

③ AUX terminal structure and internal circuit diagram

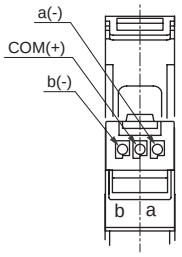

Top of valve block
Socket insertion figure

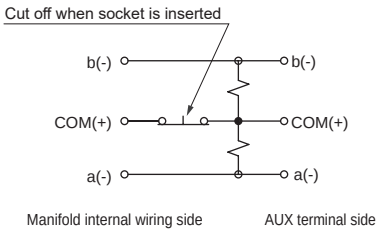

Outline of AUX terminal polarity and internal circuit

⚠ Safety precautions

*1: The polarity of the reduced wiring side and individual power supply side is **limited to a plus common**. Normal operation will be impossible if the polarity is incorrect.

*2: **Use separate power for the reduced wiring side and the individual power input side.** If the same power is used, the reduced wiring side's wiring will not be cut off, resulting in incorrect operation.

How to operate barbed fitting for ø1.8 fiber tube

* MN3E0/MN4E0 only

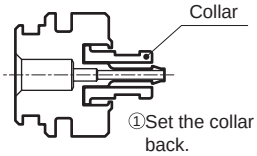

①Set the collar at the very back.

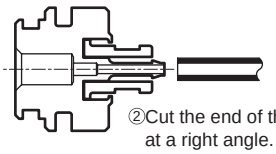

②Cut the end of the fiber tube at a right angle.

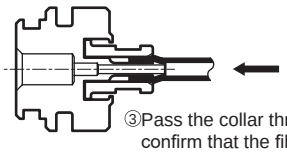

③Pass the collar through, and confirm that the fiber tube is correctly inserted while carrying out the work.

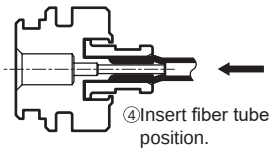

④Insert fiber tube to the last position.

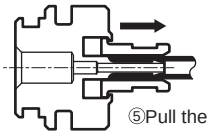

⑤Pull the collar forward to lock it.

Wiring structure between wiring block and valve block

A part called a dedicated wiring connector is built into the valve block and supply and exhaust block, etc. This structure enables the wiring to be completed simultaneously with the disassembly and assembly of the block manifold. Special wiring work is not required during disassembly and assembly. A wiring structure pattern diagram is shown below.
There is regularity to the wiring block connector pin numbers and arranged valves. Refer to the section on the wiring method, and connect the wires between the valves and control equipment. Take special care when increasing or decreasing the number of valve blocks.

For T* (left wiring block) or TM* (intermediate wiring block) only

The blocks are arranged in the order of 1a, 1b, 2a and so forth from the valve block to the right of the wiring block with the port facing forward.

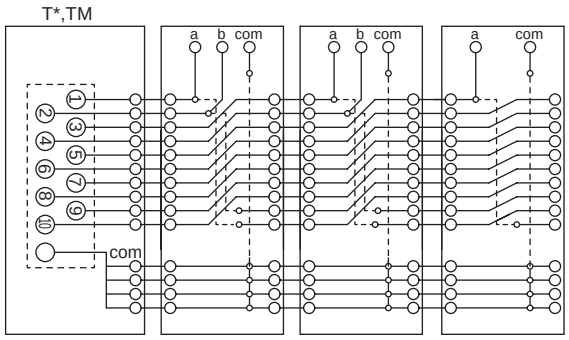

For only T*R (right wiring block)

The blocks are arranged in the order of 1a, 1b, 2a and so forth from the valve block to the left of the wiring block with the port facing forward.

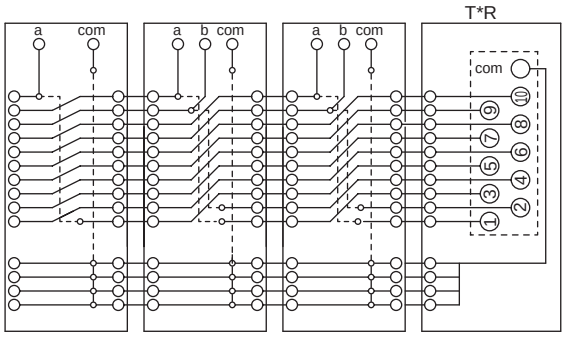

For {T* (left wiring block) or TM* (intermediate wiring block)} + TM* (intermediate wiring block) for TX (mix)

The blocks are arranged in the order of 1a, 1b, 2a and so forth from the valve block on the right of the wiring block with the port facing forward. Wiring is cut off on the left of the intermediate wiring block.

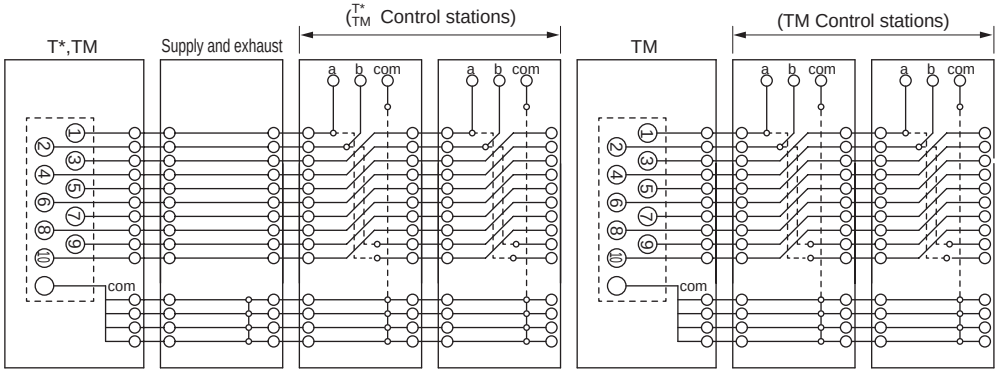

For {T* (left wiring block) or TM* (intermediate wiring block)} + T*R (right wiring block) for TX (mix)

The 1a, 1b, 2a, etc., layout starting from the left wiring block and the 1a, 1b, 2a, etc., layout starting from right wiring block coexist.
The circuit is cut off at the center with the supply and exhaust block N4E0-Q-*-C (type with no internal wiring circuit) to prevent mutual wiring interference.

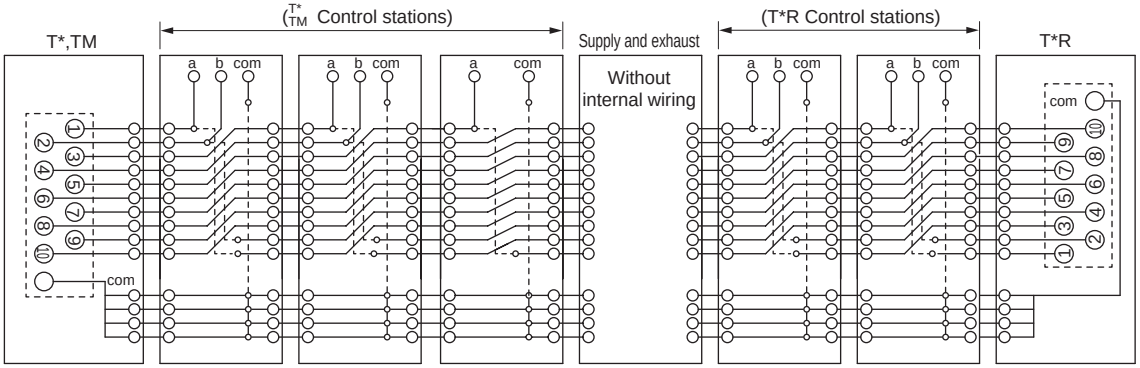

Example of incorrect layout Left/right wires interfere at center
The left/right wiring block circuits may connect via the manifold and result in unexpected valve operation.

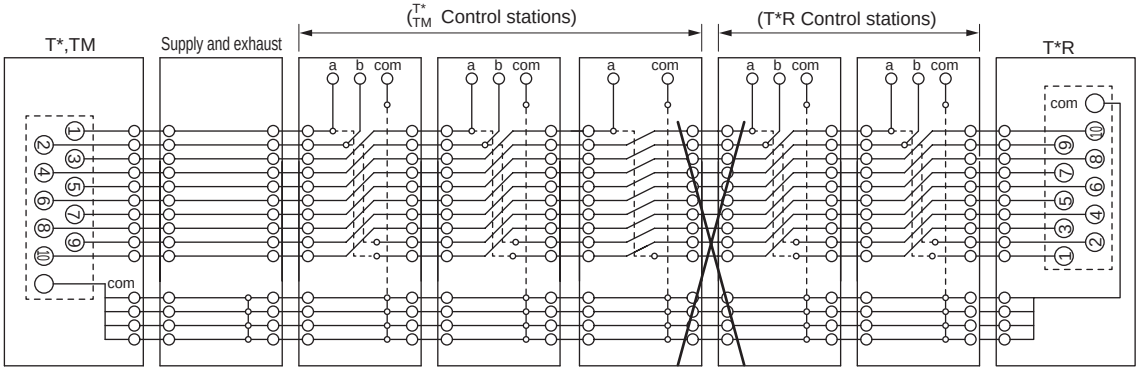

Regulator block characteristics

Flow characteristics

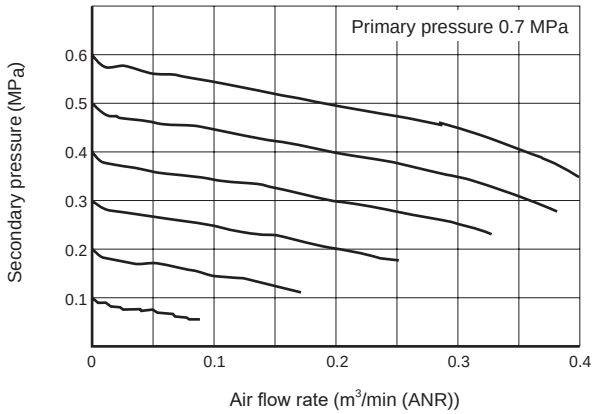

Pressure characteristics

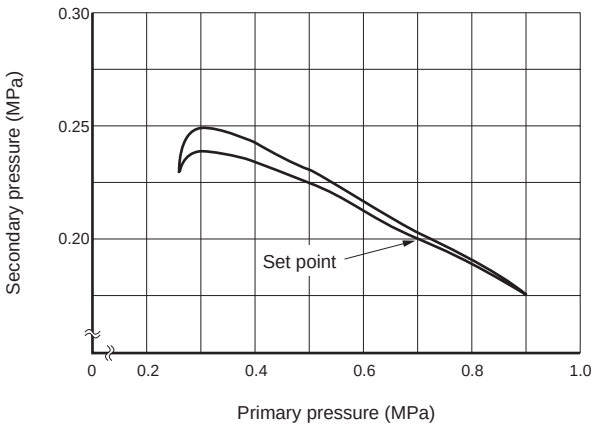

MN3E/MN4E Series

How to fill out MN3E/MN4E Series manifold specifications sheet

● Manifold model No. example (To include dummy blocks, select mix manifold and write the station No. including the number of dummy blocks.)

MN 4 E0 8 0 – CX – R – M – T50RD2 W F – 10 – 3

Ⓐ Model No. Ⓑ Solenoid position Ⓒ Port size Ⓓ Adjustment function Ⓔ Manual override Ⓕ Wiring method Ⓖ Terminal/ connector pin array Ⓗ Option Ⓘ Station No. Ⓙ Voltage

· When filling in this field, select the model No. from "Block configurations" (pages 922 to 932).
· Complete from the left end, with the piping port in the front, regardless of the wiring block method.

(For the manifold model No., refer to pages 874, 878, 898 and 902)

Part name	Model No.	Layout position 1	2	3	4	5	6	7	8	9	10	11	12	13	14	15	16	17	18	19	20	21	22	23	24	25	26	27	28	29	30	31	32	33	34	35	36	Quantity
Wiring block	N4E0-T 50R															○																						1
	N4E0-T																																					
Layout when including individual wiring mix			○	○																																	2
Valve block 7 mm pitch	N E00 0-																																				
	N E00 0-																																				
	N E00 0-																																				
	N E00 0-																																				
Valve block 10 mm pitch	N 3 E0 1 0- C6		○	○																																	2
	N 3 E0 1 0- C4					○																															1
	N 3 E0 2 0- C4						○			○																											2
	N 3 E0 3 0- C4											○	○	○																								3
Dummy block	N4E0-MPS																																				
	N4E0-MPD							○	○																												2
Supply and exhaust block	N4E0-Q Z - 8 - S										○																										1
	N4E0-Q-8														○																						1
	N4E0-Q - - - -																																				
Regulator block	N4E0-R A - FL - C8				○																																1
	N4E0-R - - -																																				
	N4E0-R - - -																																				
End block	N4E0-E L	○																																			1
	N4E0-E																																				
Mounting rail	L2=	Blanking plug (for push-in fitting)																																			
		ø1.8		ø3		ø4		ø6		ø8																											
		Barbed threaded fitting for ø1.8 tube (10 pcs./set)																																			
		N4E0-JOINT-PTN2-M3				N4E0-JOINT-PTN2-M5				N4E0-JOINT-PTN2-6																											
		Socket assembly for power supply (for individual wiring, AUX)																																			
		N4E0-SOCKET- -																																			
		N4E00-SOCKET- -																																			

Silencer: ø6, ø8

Push-in fitting tube remover ☐ Not required (check the box)

Cable with D sub-connector: N4T-CABLE-D0 -

Wiring block TM1 connector: N4E0-TM-CONNECTOR

N4E00-SOCKET-SET

Accessory

(Write an integer multiple of 12.5.)

Preparing manifold specifications sheet

● Complete from the left end, with the piping port facing forward, regardless of the wiring block method.
(Write the block model numbers and positions you determined referring to the block configurations (pages 922 to 932).)
● Indicate the total number of blocks designated in the required quantity on the right of the table.
● Indicate the quantity of required accessories.
● Indicate the mounting rail length. (For lengths other than the standard length only, write an integer multiple of 12.5.)

Obtaining the DIN rail length

Obtain the mounting rail length and pitch based on the manifold length (L_1) with the following calculation formula.
The rail length obtained here is the standard length, and does not need to be indicated in the specifications.
Indicate the length in the specifications only when different from the standard length.

Manifold length L_1 = (7x[Valve block])+(10x[Valve block])+(7x[Dummy block])
+ (15.5 x [Supply and exhaust block])+(30 x [Regulator block]) +[Wiring block (including end block)] ……Select from the table at right.

Mounting rail length $L_2 = L_2' \times 12.5$

$L_2' = \frac{L_1+25}{12.5}$ → Round up to the first decimal place. Rail mounting pitch $L_3 = L_2 - 12.5$

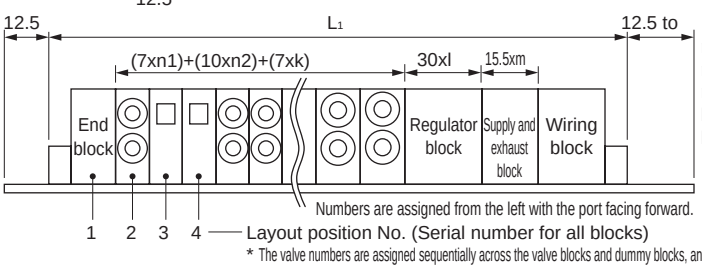

* The valve numbers are assigned sequentially across the valve blocks and dummy blocks, and are therefore different from the layout position numbers

n1 : number of 7 mm wide valve blocks
n2 : number of 10mm wide valve blocks
m : number of supply and exhaust blocks
l : number of regulator blocks
k : number of dummy blocks

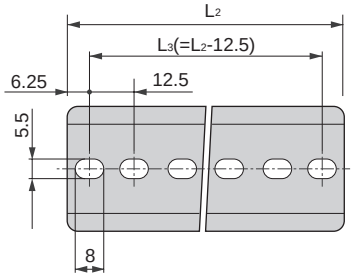

Wiring block dimensions table (including end block)

Wiring block		Dimensions (mm)
T30(N)/T30(N)R	Left or right wiring block	42.4
T5*/T5*R	Left or right wiring block	42.4
TM*	Intermediate wiring block	43.2
TM*x2	Intermediate wiring block x 2 pcs	55.2
TM*+T3*/T5*	Intermediate wiring block + left or right wiring block	54.4
T30/T5*+T30R/T5*R	Left wiring block + right wiring block	53.6
T6*	Serial transmission device unit	115.6
T7*	Serial transmission device unit (close contact)	73.1
T7EC*	Serial transmission device unit (close contact)	86.6

MN3E/MN4E Series manifold specifications sheet

● Contact ● Quantity set(s) ● Delivery date /

Slip No.	Order No.

Issued / /

Company

Contact

Order No.

● Manifold model No. (To include dummy blocks, select mix manifold and write the station No. including the number of dummy blocks.)

7/10 mm pitch mix manifold

MN □ EX0 – □ – □ – □ □ □ – □ – □ (For the manifold model No., refer to page 920)

7 mm pitch manifold

MN □ E00 □ 0 – □ – □ – □ □ □ – □ – □ (For the manifold model No., refer to pages 874 and 878)

10 mm pitch manifold

MN □ E0 □ 0 – □ – □ – □ □ □ – □ – □ (For the manifold model No., refer to pages 898 and 902)

Ⓐ Model No. Ⓑ Solenoid position Ⓒ Port size Ⓓ Adjustment function Ⓔ Manual override Ⓕ Wiring method Ⓖ Terminal/connector pin array Ⓗ Option Ⓘ Station No. Ⓙ Voltage

· When filling in this field, select the model No. from “Block configurations” (pages 922 to 932).
· Complete from the left end, with the piping port in the front, regardless of the wiring block method.

Part name	Model No.	Layout position 1 2 3 4 5 6 7 8 9 10 11 12 13 14 15 16 17 18 19 20 21 22 23 24 25 26 27 28 29 30 31 32 33 34 35 36	Quantity
Wiring block	**N4E0-T □**		
	N4E0-T □		
Layout when including individual wiring mix			
Valve block 7 mm pitch	**N □ E00 □ 0- □**		
	N □ E00 □ 0- □		
	N □ E00 □ 0- □		
	N □ E00 □ 0- □		
Valve block 10 mm pitch	**N □ E0 □ 0- □**		
	N □ E0 □ 0- □		
	N □ E0 □ 0- □		
	N □ E0 □ 0- □		
Dummy block	**N4E0-MPS**		
	N4E0-MPD		
Supply and exhaust block	**N4E0-Q □-□-□-□**		
	N4E0-Q □-□-□-□		
	N4E0-Q □-□-□-□		
Regulator block	**N4E0-R □-□-□**		
	N4E0-R □-□-□		
	N4E0-R □-□-□		
End block	**N4E0-E □**		
	N4E0-E □		
Mounting rail	**L2= □** (Write an integer multiple of 12.5.)		

Accessory

Blanking plug (for push-in fitting)												Silencer				Push-in fitting tube remover ☐ Not required (check the box)
ø1.8		ø3		ø4		ø6		ø8		ø6		ø8				

Barbed threaded fitting for ø1.8 tube (10 pcs./set)						Cable with D sub-connector	
N4E0-JOINT-PTN2-M3		**N4E0-JOINT-PTN2-M5**		**N4E0-JOINT-PTN2-6**		**N4T-CABLE-D0 □-□**	

Socket assembly for power supply (for individual wiring, AUX)				Wiring block TM1 connector	
N4E0-SOCKET- □-□		**3M0-SOCKET-SET**		**N4E0-TM-CONNECTOR**	
N4E00-SOCKET- □-□		**N4E00-SOCKET-SET**			

* The max. number of inputs of individual wiring is 16 when the T** wiring method and individual wiring are mixed. Individual wiring is not available for the TX wiring method.

Reference circuit diagram

The circuit diagram of the manifold (example) on the previous page. Use for reference.

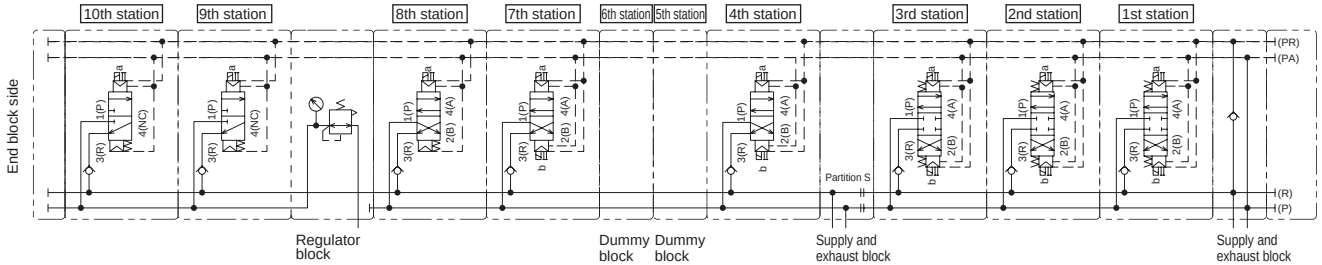

MEMO

Safety Precautions

Be sure to read this section before use.
Refer to Intro Page 59 for general precautions for using valves.

Product-specific cautions: Pilot operated 3, 4-port valve MN3E00/MN4E00/MN3E0/MN4E0 Series

Design/selection

1. Self-reset

⚠WARNING

■ The self-reset is available for the valve block solenoid position class.

With both self-reset, “differential pressure return” and “differential pressure spring return”, the main valve returns to the origin (self-resets) when OFF under normal pressures. However, if the supply pressure is 0 in the ON state,

· The “differential pressure return” holds the current position.

· The “differential pressure spring return” will return to the origin with the spring force.

Select the type based on the interlock specifications of the device in use.

Main valve hold/reset status list

Valve			Source pressure down when ON	→ Reset source press	Power supply cutoff when ON
N3E00 N3E0	1/11	3-port valve single NC/NO self-reset (differential pressure spring return)	OFF (origin) movement	ON movement	OFF (origin) movement
	2/21	3-port valve double NC/NO self-hold	ON position holding		ON position holding
	66/67/76/77	Two 3-port valve integrated NC/NO self-reset (differential pressure return)	ON position holding		OFF (origin) movement
	66S/67S/76S/77S	Two 3-port valves integrated, NC/NO self-reset (differential pressure spring return)	OFF (origin) movement	ON movement	OFF (origin) movement
N4E00 N4E0	1	4-port valve 2-position single self-reset (differential pressure spring return)	OFF (origin) movement	ON movement	OFF (origin) movement
	2	4-port valve 2-position double self-hold	ON position holding		ON position holding
	3/4/5 (N4E0 only)	4-port valve 3-position	OFF (origin) movement	ON movement	OFF (origin) movement

2. Check valve

⚠WARNING

■ Check valve blocks back pressure from adjacent pneumatic devices, etc. However, the structure does not permit continuous pressure holding, so do not use for purposes other than blocking back pressure.

3. Built-in individual power supply function (AUX)

⚠WARNING

■ The polarity of the reduced wiring side and individual power supply side is a **plus common**.

Normal operation will be impossible if the polarity is incorrect.

Use different power supplies for the reduced wiring side and the individual power input side.

If the same power supply is used, the reduced wiring side’s wiring will not be cut off, resulting in incorrect operation.

■ Inputting individual power

Open the wiring cover and connect the power input socket Connect (N4E0-SOCKET-S/D).

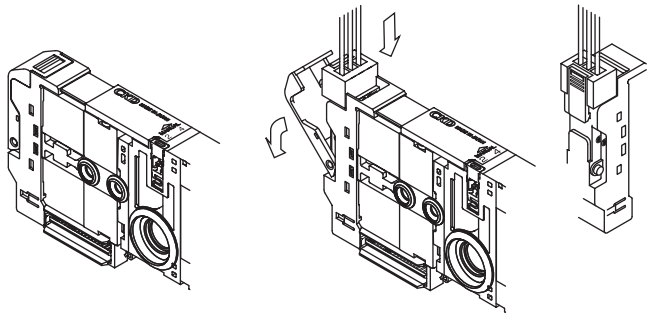

When the power input socket is connected, the valve’s internal wiring will be temporarily separated from the reduced wiring in the manifold, so power can be supplied from an external source.

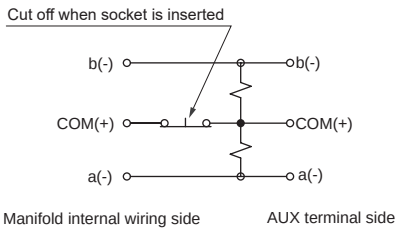

Outline of AUX terminal polarity and internal circuit

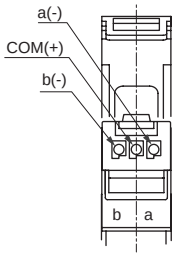

Valve block upper socket insertion diagram

Design/selection

4. Wiring block mix

⚠WARNING

■ When using the mixed wiring block specifications by using T*R (right side specifications) for the wiring block, short-circuiting of the signal wires between the wiring blocks must be prevented. If the left and right signals are connected, unintentional valve block operation will occur and equipment may be damaged.
Lay out the supply and exhaust block N4E0-Q*-C (specifications without internal wiring) between the valves supplying power from the left side and the right side.

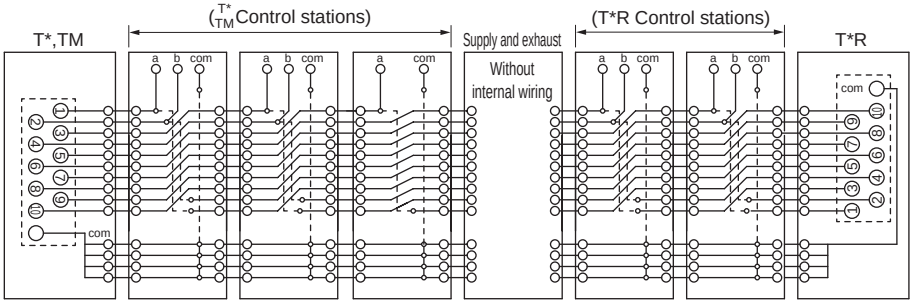

Example of incorrect layout The left and right wires interfere at the center.

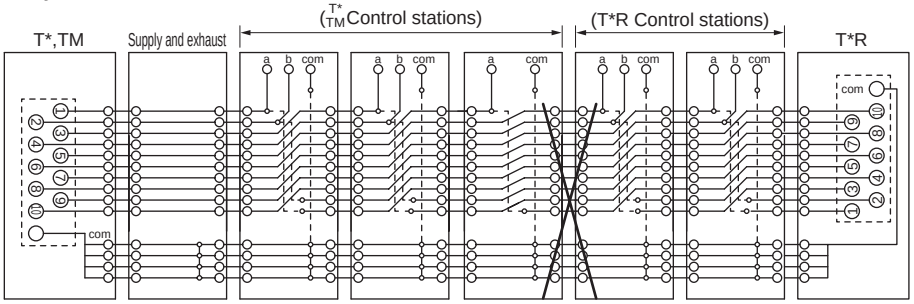

5. Surge suppressor

⚠CAUTION

■ The surge suppressor attached to the solenoid valve is intended to protect the output contacts for the solenoid valve drive. There is no significant protection for the other peripheral devices, and devices could be damaged or could malfunction due to a surge. As well, surges generated by other devices may be absorbed and cause damage such as burning. Note the following points.

① The surge suppressor functions to limit solenoid valve surge voltage, which can reach several hundred volts, to a low voltage level that the output contact can withstand. Depending on the output circuit used, this may be insufficient and could result in damage or malfunction. Check whether the surge suppressor can be used within the surge voltage limit of the solenoid valve in use, the output device's withstand pressure and circuit structure, and by the degree of return delay time.
When necessary, provide other surge countermeasures. The inverse voltage surge generated when OFF can be suppressed to the following levels.

Specification voltage	Inverse voltage when OFF
12 VDC	Approx. 27 V
24 VDC	Approx. 47V

② If the output unit is an NPN, the output transistor may be subject to the voltage shown in the table plus the power supply voltage. Make sure to implement a contact protection circuit to avoid the risk.

[Output transistor protection circuit: Installation example 1]

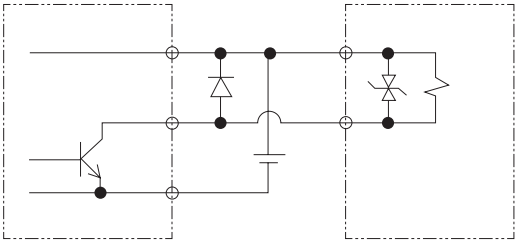

[Output transistor protection circuit: Installation example 2]

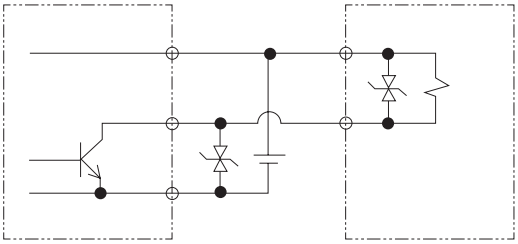

③ When solenoid valves are connected in parallel with other components or solenoid valves, inverse voltage is applied to these components and/or solenoid valves when the solenoid valve is turned OFF. Even in the case of a solenoid valve with 24 VDC surge suppressor, a surge voltage may reach negative tens of volts for same models. This inverse polarity voltage may cause damage or malfunctions to other components connected in parallel. Avoid parallel connection of devices susceptible to inverse polarity voltages, e.g., LED indicator lamp. When driving several solenoid valves in parallel, the surge from other solenoid valves may enter the surge suppressor of one solenoid valve, and it may burn depending on the current value.
When driving several solenoid valves with surge suppressors in parallel, surge current could concentrate at the surge suppressor with the lowest limit voltage and cause similar burning. Due to the variations in surge suppressor limit voltage that exist even among solenoid valves of the same model No., in the worst case the surge suppressor may burn out. Avoid driving several solenoid valves in parallel.

④ The surge suppressor incorporated in the solenoid valve will often be short-circuited if it is damaged by overvoltage or overcurrent from other solenoid valves. Where there is a failed surge suppressor, if a large current flows when the output is ON, in the worst case scenario, the output circuit or solenoid valve could be damaged or ignited. Do not continue energizing in a state of failure.
Additionally, to prevent large currents from continuing to flow, connect an overcurrent protection circuit to the power supply and drive circuit, or use a power supply with overcurrent protection.

6. Low exoergic/energy saving circuit

⚠CAUTION

■ Do not use this valve in an environment where the vibration and impact exceed specifications. This may result in valve malfunction.

With the type with low exoergic/energy-saving circuit, the control circuit is built into the valve block. This structure lowers the current value when the coil is suctioned and held. Only plus common polarity is used.

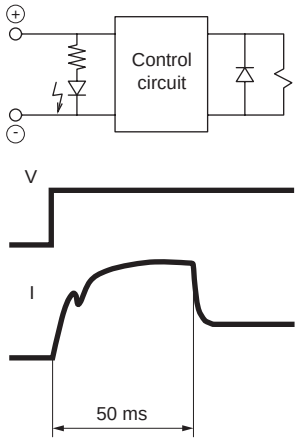

Individual specifications for low exoergic/energy saving circuit

Item			Description	
			N4E00	N4E0
Energizing current A	When starting	24 DC	0.017	0.025
		12 DC	0.033	0.050
	When holding	24 DC	0.009	0.013
		12 DC	0.018	0.025
Power consumption W	When starting	24 DC	0.4	0.6
		12 DC		
	When holding	24 DC	0.22	0.3
		12 DC		

7. Polarity

⚠CAUTION

■ When selecting the low exoergic/energy-saving circuit, the connection is dedicated for plus common. Note the connection polarity. For details on surge suppressor, refer also to “5. Surge suppressor” on page 960.

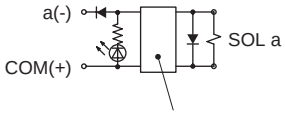

Single/energy saving circuit built in

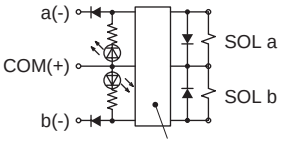

Double/energy saving circuit built in

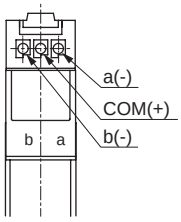

Upper view of valve block

■ The energized state cannot be maintained if power is cut off instantaneously for 30 ms or less on the power source driving the solenoid valve. If any disturbance has caused up to 30 ms instantaneous power cut-off of the solenoid valve after being continuously energized, cut the power OFF for 50 ms or more before switching the solenoid valve ON again.

8. Wiring in manifold when mixing with reduced wiring

⚠CAUTION

■ The internal circuit of the individual wiring valve block is completely separated from the reduced wiring electric circuit in the manifold. Even if the individual wiring valve block is inserted between the reduced wiring valve blocks, the pin array on the wiring block side will not change.

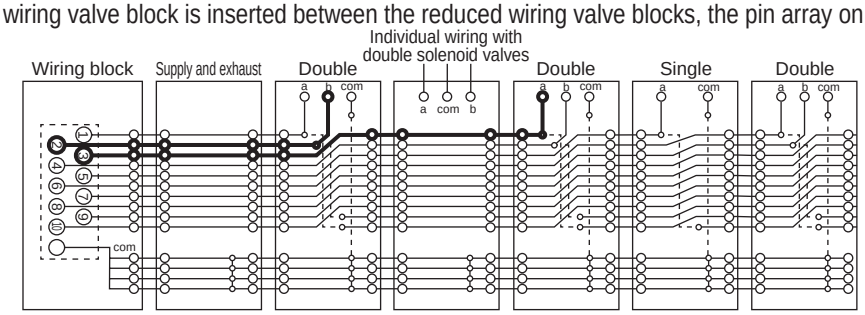

The pin array on the wiring block side eliminates the individual wiring in order from the first station, and shifts the blocks in order.

Mounting, installation and adjustment

1. Manual override

⚠WARNING

■ The 4E Series is a pilot operated solenoid valve. The main valve does not switch over even if the manual override is operated unless air is supplied to the P-port (PA port for external pilot).

■ Manual override protective cover is provided as standard. The protective cover is closed when shipped. Therefore, the manual override device cannot be seen when delivered. Open the protective cover to operate the manual override. Note that the protective cover cannot be closed unless the locking manual override is released.

■ Manual override is used for both non-locking and locking. Holding down and turning the button locks the valve. Be sure to press down before rotating to lock. If manual override is turned without being pressed down, it could be damaged or air could leak.

2. External pilot piping port

⚠CAUTION

■ The external pilot has a separate pilot air supply. As ø6 push-in fitting is used to supply the pilot air, check that the piping connection position is correct. Malfunctions could occur if the piping is incorrect.

Port indication

Applications		Indication (ISO standards)
Pilot air	Pilot air supply port	12/14

* Port A/B pressurization and port R pressurization are not possible.

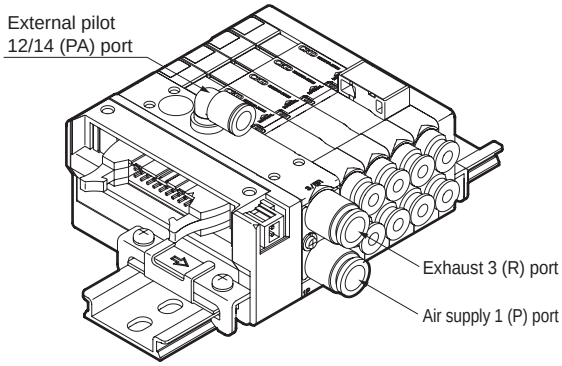

The external pilot air supply port is the ø6 push-in fitting (ø5/32" when inch fitting is selected) on the top of the supply and exhaust block.

3. How to install manifold

⚠CAUTION

■ The 4E Series is dedicated for DIN rail mounting. The manifold could fall off or be damaged if not installed correctly. If the manifold weighs more than 1 kg, or when using in an environment with vibration or impact, fix the DIN rail onto the surface at 50 to 100 mm spacing, and confirm that there is no problem with installation before starting operation. Use the specifications to calculate the weight. Also calculate the weight of the other devices installed. (Refer to pages 873 and 897 for weight.)

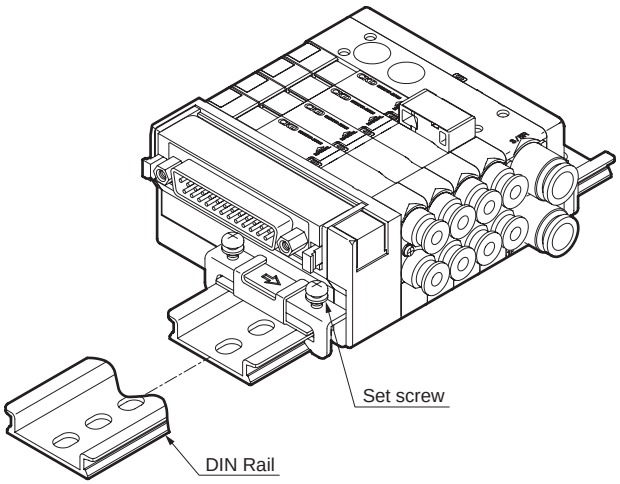

4. Lead wire connection

■ The following lead wires are used in the 4E Series individual wiring valve blocks and types with built-in individual power supply function (AUX).

Conductor size	Outer diameter of insulator
AWG#26	1.32

When wiring the installed manifold, ensure that tension is not applied to the lead wire.

Use/maintenance

1. Manual override

⚠WARNING

■ Opening and closing the manual protective cover

Do not excessively force the manual protective cover when opening and closing it. Excessive external force could cause failures. (Below 5 N)

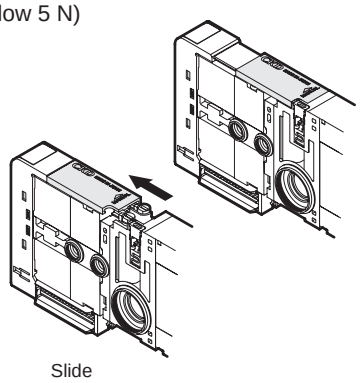

■ How to operate manual override

①Push & non-locking operation

Push in the direction of the arrow until it stops.
Release to cancel.

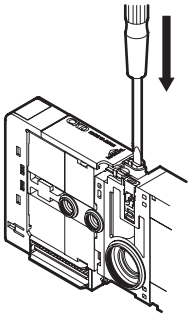

②Push locking operation

Push and hold the button and turn it 90° in the direction of the arrow.
The function is not canceled even when the button is released.

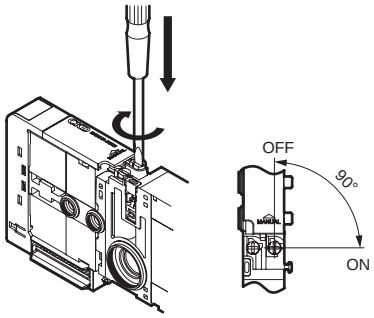

WARNING

When conducting manual operations, make sure that there are no people near the operating cylinder.

2. External pilot piping port

⚠CAUTION

■ Take care with supply pressure for the two 3-port valves integrated.

The valving element of the two 3-port valves integrated is operated with the main (P-port) supply pressure.

· Check that the main pressure (P-port) is no higher than the pilot pressure (PA port)

· Ensure that the main pressure (P-port) does not drop below 0.2 MPa.

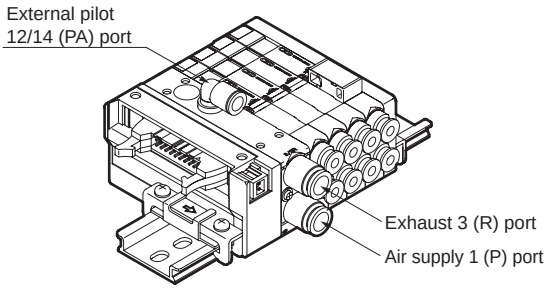

3. Port filter

⚠CAUTION

■ The port filter prevents the entry of foreign matter and other manifold issues (mesh hole ø0.3 mm). This does not improve the quality of the compressed air, so read Warnings and Precautions in the Introduction, then mount, install, and adjust the filter accordingly. Do not detach or press down the port filter forcibly. The filter could deform, causing problems.

If contaminants and foreign matters are found on the filter surface, blow them off lightly, or remove them with tweezers, etc.

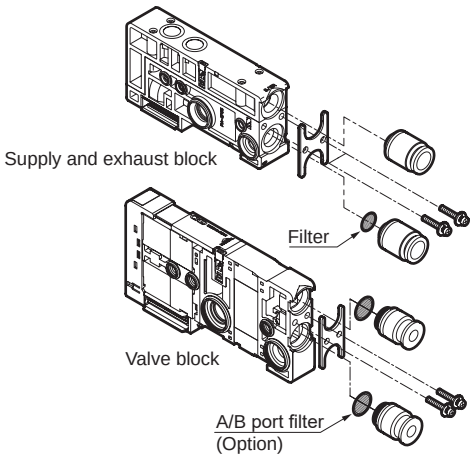

4. Pneumatic source

⚠CAUTION

■ As this product has non-lubrication specifications, adding oil may cause leakage of the grease initially sealed in, which may prevent the product from displaying its maximum performance.

W4G2

3, 5-port pilot operated valve, plug-in block manifold

Overview

W4G Series, plug-in manifold of 5-port pneumatic valve, is highly environment-resistant and also eco-friendly. Greater ease of use and safety have been obtained.

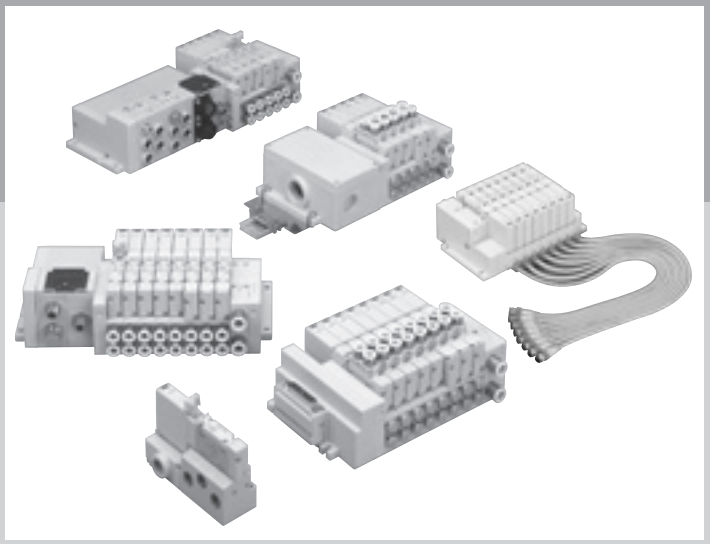

Features

Enhanced environmental resistance

Degree of protection IP65 (dust proof/jet proof) and applicable to various working environments.

Enhanced usability

Direct mounting and DIN rail mounting can be selected. The adopted plug-in method enables easy replacement of valves. A variety of wiring options and piping methods have increased flexibility in installation.

Enhanced safety

The manual override is equipped with a protective cover and the air supply port with a filter as standard, as well as the built-in exhaust check valve

Enhanced reliability

Response 24 ms or less
Service life of 60 million cycles or more

CONTENTS

Product introduction	966
Series variation	968
Electrical connections list (wire connections/circuit)	970
Discrete valve	
● Base piping (W3GB2/W4GB2)	972
Individual wiring manifold	
● Body piping (MW ¾GA2-R1)	976
● Base side piping (MW ¾GB2-R1)	980
● Base bottom piping (MW ¾GZ2-R1)	980
Reduced wiring manifold	
● Body piping (MW GA2-T*)	988
● Base side piping (MW ¾GB2-T*)	1010
● Base bottom piping (MW ¾GZ2-T*)	1010
Block components	1048
Related products (air supply spacer/exhaust spacer/ pilot check valve/silencer/blanking plug, etc.)	1057
Internal structure and parts list	1066
Technical data	
(1) Pneumatic system selection guide	1070
(2) Notes on wiring	1074
(3) Check valve	1105
(4) How to expand reduced wiring manifold	1093
Manifold and wiring specifications sheet	1096
⚠ Safety precautions	1103

More friendly to environment and

W4G2 Series, a plug-in block manifold with 5-port pneumatic valve, meets the needs of today with high environment resistance and environmental awareness, as well as excellent usability from mounting to maintenance.

Various useful functions

● Serial transmission

Compatible with various communication specifications

● Manual override

OFF function and non-locking are available.

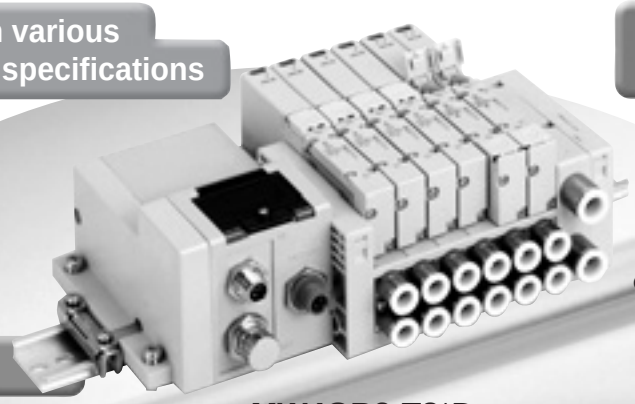

MW4GB2-T8*D

● How to install manifold

Supports DIN rail mount.

● Spacer

Air supply spacer and exhaust spacer

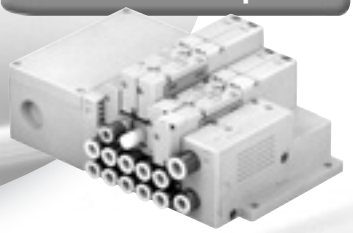

● Electrical connections

D sub-connector, flat cable and I/O connector (individual wiring)

G Improved environment-friendliness

More resistant to environment

● Degree of protection IP65 supported
(Dust proof/jet proof)

Can be used in various working environments.

More friendly to environment

● Environment-friendly wires
have been adopted for internal wiring.

● Indication of material names
Material names are stamped on the main components for easy recycling.





MW4GB2-T8*Y*
Serial transmission + I/O block

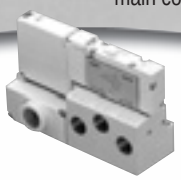

W4GB2

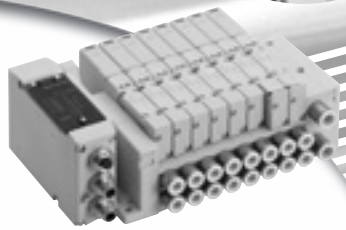

MW4GB2-T*



MW4GA2-T10
Common terminal block

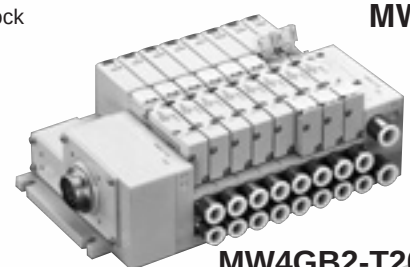

MW4GB2-T20
Multi-connector

people - **W4G2**

Improved usability

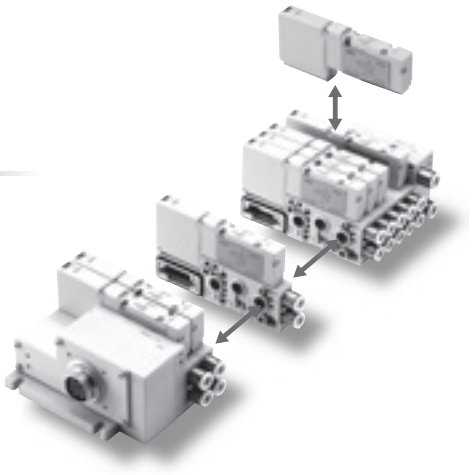

Easier installation and maintenance

- **Easy replacement of valves**
  The plug-in method has been adopted.
- **No wiring work when adding more blocks**
  Connector interface has been adopted between the manifold blocks
  (except for the AC)
- **Supports DIN rail mount.**
  Specification change from direct mounting is also possible.

More flexible

- **Air supply spacer/exhaust spacer**
  Space saving and compatible with the multi-pressure and individual exhaust specifications.
- **Piping direction options**
  Top, side or bottom * piping direction can be selected.
  (* except for DIN rail mount)
- **Supports multi-pressure**
- **A wide range of wiring options**

Common terminal block | I/O connector (Individual wiring) | Multi-connector

Serial transmission
- CC-Link
- Device Net
- EtherCAT
- CC-Link IEF Basic
- PROFINet

D sub-connector (IP40 or equivalent)



Flat cable (IP40 or equivalent)



- **Network control of peripheral devices**
  Adding more I/O blocks enables network control of valves and sensors around the manifold.
  (serial transmission)

Improved reliability

- **24** ms or less response.
  (in-house data: 2-position single)
- Service life of **60** million times or more
  (at 0.5 MPa with clean air)

Improved safety

- **Three types of manual override**



(1) Non-locking
Locking common (standard)



(2) With OFF function

Blocks can individually be turned OFF while the valve power supply is ON, and therefore installation, maintenance and inspection of the system is easy. This type also supports normal manual override operation.
(push/non-locking)



(3) Non-locking



- The attached protective cover prevents misoperation of the manual override.
- The integrated check valve prevents cylinder accidental operation caused by back pressure.
- A filter is installed in the air supply port (optional for single unit).



Series variation/appearance			Model No.		Position No. of solenoids JIS symbol	Valve performance: Flow characteristics C [dm³/(s·bar)] *1	Valve performance: Cylinder bore size	Voltage: 100VAC (1)	Voltage: 24VDC (3)	Voltage: 12VDC (4)	Degree of protection
Single unit	Base piping	W4GB2*0 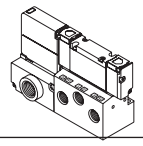	**W3GB2 W4GB2**		● 3-port valve 2-position single NC 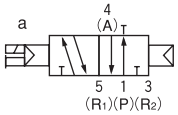	**2.1 to 2.5**	**ø20 to ø80**	●	●	●	IP 65
Individual wiring manifold	Body piping	MW$^{3}_{4}$GA2*0 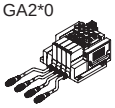 MW4GB2*0 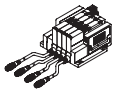 I/O connector (R1) MW4GZ2*0  I/O connector (R1)	**MW3GA2 MW4GA2 (NW3GA2) (NW4GA2)**	Individual wiring (-R1)	2-position single NO 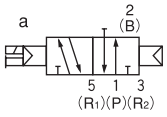	**1.7 to 2.3**	**ø20 to ø80**		●	●	IP 65 Equivalent
	Base side piping		**MW3GB2 MW4GB2 (NW4GB2)**						●	●	IP 65 Equivalent
	Base bottom piping		**MW3GZ2 MW4GZ2 (NW4GZ2)**						●	●	IP 65 Equivalent
Reduced wiring manifold	Body piping	MW$^{3}_{4}$GA2*0 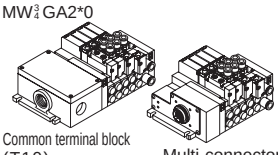 Common terminal block (T10) Multi-connector (T20) 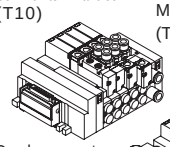 D sub-connector (T30) 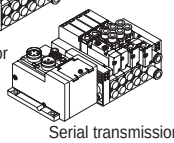 Serial transmission (T7,T8*)	**MW3GA2 MW4GA2 (NW3GA2) (NW4GA2)**	Common terminal block (-T10)	● 5-port valve 2-position single 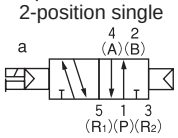	**1.7 to 2.3**	**ø20 to ø80**	●	●	●	IP 65
				Multi-connector (-T20)					●	●	IP 65
				D sub-connector (-T30)					●	●	IP 40
				Flat cable Connector (-T5*)					●	●	IP 40
				Serial transmission (-T7,T8*)	2-position double 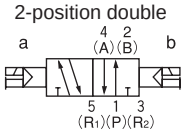				●		IP 65
	Base side piping	MW4GB2*0 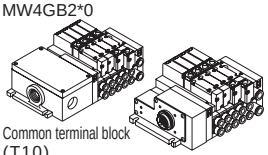 Common terminal block (T10) Multi-connector (T20) 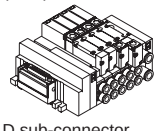 D sub-connector (T30) 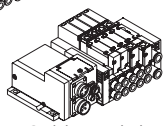 Serial transmission (T7,T8*)	**MW3GB2 MW4GB2 (NW4GB2)**	Common terminal block (-T10)	3-position all ports closed 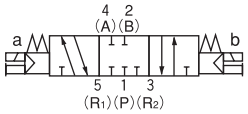	**1.7 to 2.3**	**ø20 to ø80**	●	●	●	IP 65
				Multi-connector (-T20)					●	●	IP 65
				D sub-connector (-T30)					●	●	IP 40
				Flat cable Connector (-T5*)					●	●	IP 40
				Serial transmission (-T7,T8*)	3-position A/B/R connection 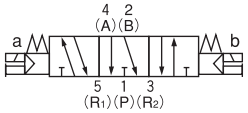				●		IP 65
	Base bottom piping	MW4GZ2*0 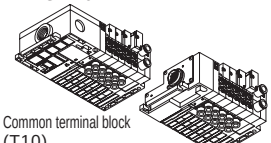 Common terminal block (T10) Multi-connector (T20) 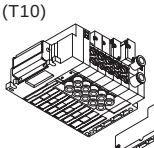 D sub-connector (T30) 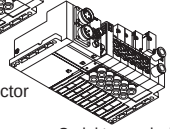 Serial transmission (T7,T8*)	**MW3GZ2 MW4GZ2 (NW4GZ2)**	Common terminal block (-T10)	3-position P/A/B connection 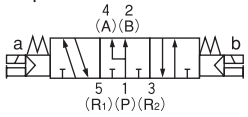	**1.7 to 2.3**	**ø20 to ø80**	●	●	●	IP 65
				Multi-connector (-T20)					●	●	IP 65
				D sub-connector (-T30)					●	●	IP 40
				Flat cable Connector (-T5*)					●	●	IP 40
				Serial transmission (-T7,T8*)					●		IP 65

*1: Effective cross-sectional area S and sonic conductance C are converted as S ≈ 5.0 x C.

Switching position									A/B piping connection port							Electrical connections							Page
2-position				3-position					Push-in fitting			Push-in fitting L type (upward)		Female thread									
Normally closed	Normally open	Single	Double	All ports closed	ABR connection	PAB connection	Mix	ø4	ø6	ø8	ø6	ø8	Rc 1/8	Rc 1/4	Terminal block	IO connector	Common terminal block	Multi-connector	D sub-connector	Flat cable connector	Serial transmission	
								C4	C6	C8	CL6	CL8	06	08	Blank	R1	T10	T20	T30	T5□	T7□/T8□	
		●	●	●	●	●								●	●	●							972
●	●	●	●	●	●	●	●	●	●	●			●			●							976
		●	●	●	●	●	●	●	●	●	●	●				●							980
		●	●	●	●	●	●	●	●	●						●							980
●	●	●	●	●	●	●	●	●	●	●			●				●						
●	●	●	●	●	●	●	●	●	●	●			●					●					
●	●	●	●	●	●	●	●	●	●	●			●						●				988
●	●	●	●	●	●	●	●	●	●	●			●							●			
●	●	●	●	●	●	●	●	●	●	●			●								●		
		●	●	●	●	●	●	●	●	●	●	●					●						
		●	●	●	●	●	●	●	●	●	●	●						●					
		●	●	●	●	●	●	●	●	●	●	●							●				1010
		●	●	●	●	●	●	●	●	●	●	●								●			
		●	●	●	●	●	●	●	●	●	●	●									●		
		●	●	●	●	●	●	●	●	●							●						
		●	●	●	●	●	●	●	●	●								●					
		●	●	●	●	●	●	●	●	●									●				1010
		●	●	●	●	●	●	●	●	●										●			
		●	●	●	●	●	●	●	●	●											●		

Electrical connections

Single unit

Blank Terminal block

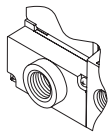

R1 I/O connector

● **Lead wire length** 500 mm

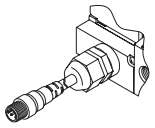

Individual wiring manifold

R1 I/O connector (M12)

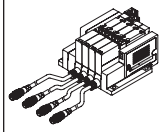

Reduced wiring manifold

T10 Common terminal block

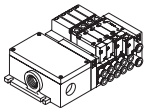

T20 Multi-connector

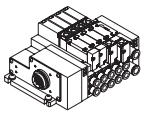

T30 D sub-connector

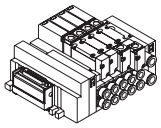

T5□ Flat cable connector

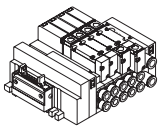

T7□ Serial transmission

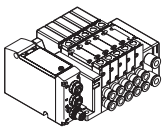

T8□ Serial transmission

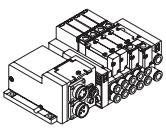

Manual override

Blank Non-locking locking common (Standard equipment)

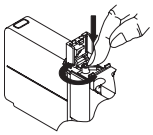

(1) For non-locking, push to turn ON, release to turn OFF

(2) For locking, push and turn 90° clockwise to hold the ON state. Turn counterclockwise to unlock OFF

M Non-locking manual override

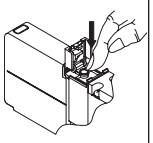

(1) Push to turn ON and release to turn OFF.

M7 Manual override with OFF function

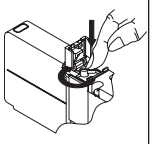

(1) Normal manual operation (Non-locking) Push to turn ON and release to turn OFF

(2) OFF function operation (when energized, locking) Push and turn 90° clockwise to keep pilot air supply stopped and turn counterclockwise to unlock to supply pilot air

Other options

H With check valve

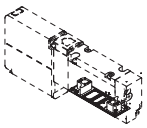

Standard for pilot exhaust

K External pilot

Main pressure and pilot pressure individual circuit specifications.

A Ozone/coolant proof product

Select for coolant inflow and ozone measures.

F A/B port filter integrated

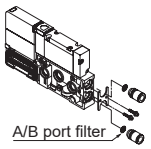

D DIN rail mount

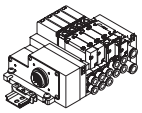

Y ** I/O block

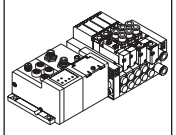

Z1 Air supply spacer

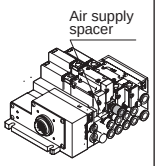

Z3 Exhaust spacer

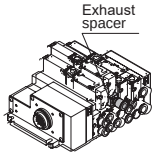

Z6 Spacer pilot check valve

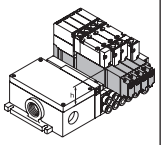

Z8 Individual air supply compatible spacer with in-stop valve spacer

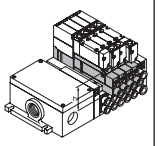

Pilot check valve (*1) (Separate mount)

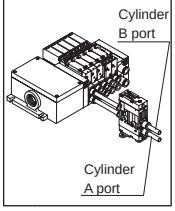

*1 Refer to page 194 for details.

Electric connection circuit diagrams (inside the solenoid valve)

With lamp/surge suppressor (standard)

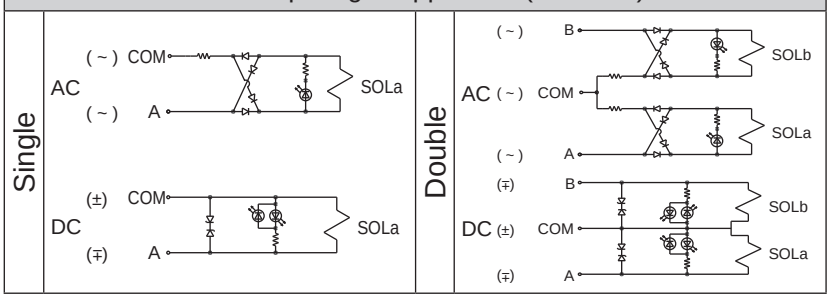

The surge suppressor uses a Zener diode.

MEMO

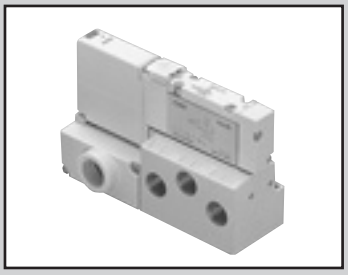

Single unit
Base piping

W3GB2/W4GB2 Series

● Cylinder bore size: ø 20 to ø80

Refer to the Ending for details.

Common specifications

1 MPa ≈ 145.0 psi, 1 MPa = 10 bar

Item	Description
Valve and operation	Pilot operated soft spool valve
Working fluid	Compressed air
Max. working pressure MPa	0.7 (≈100 psi, 7 bar)
Min. working pressure MPa	0.2 (≈29 psi, 2 bar)
Proof pressure MPa	1.05 (≈150 psi, 10.5 bar)
Ambient temperature °C	-5 (23°F) to 55 (131°F) (no freezing)
Fluid temperature °C	5 (41°F) to 55 (131°F)
Manual override	Non-locking/locking common (standard)
Lubrication (*1)	Not required
Degree of protection (*2)	Dust proof/jet proof (IP65)
Vibration resistance m/s^2	49 or less
Shock resistance m/s^2	294 or less
Atmosphere	Cannot be used in corrosive gas environments

*1 : Use turbine oil Class 1 ISO VG32 for lubrication.
Note that excessive lubricant may cause unstable operation.
*2 : Tested according to the test method for IP65 (IEC60529 (IEC529: 1989-11)) standards.
Refer to page 1103 for details.

Electrical specifications

Item		Description
Rated voltage V	DC	12, 24
	AC	100
Voltage fluctuation range		±10%
Holding current A	24 VDC	0.025
	12 VDC	0.050
	100 VAC	0.012
Power consumption W	24 VDC	0.6
(*3)	12 VDC	0.6
Apparent power VA	100 VAC	1.2
Thermal class		B

*3: Surge suppressor and indicator are supplied as standard.

JIS symbol

● Two 3-port valves integrated
(A side valve: NC, B side valve: NC)

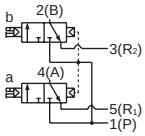

● 5-port valve

2-position single

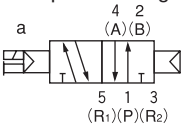

2-position double

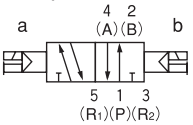

3-position all ports closed

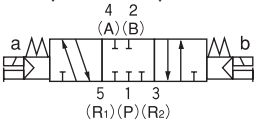

3-position A/B/R connection

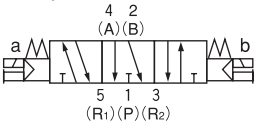

3-position P/A/B connection

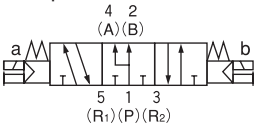

Individual specifications

Item		W3GB2/W4GB2
Port size	A/B Port	Rc1/4
	P/R port	Rc1/4

Performance/characteristics by model

Item			ON	OFF
Response time ms	Two 3-port valves integrated		12	29
	2-position	Single	22	24
		Double	26	—
	3-position		25	35

The response time is the value with supply pressure of 0.5 MPa at 20°C and without lubrication. It depends on the pressure and the lubricant quality.

Weight

Item			Terminal block	I/O connector
Weight g	Two 3-port valves integrated		367	424
	2-position	Single	351 (94)	409 (94)
		Double	367 (110)	424 (110)
	3-position		374 (117)	431 (117)

Values in ( ) are for single unit solenoid valves.

Flow characteristics

Model No.	Solenoid position		P→A/B		A/B→R	
			C[dm^3/(s·bar)]	b	C[dm^3/(s·bar)]	b
W3GB2	Two 3-port valves integrated		1.7	0.42	2.1	0.26
W4GB2	2-position		2.5	0.27	2.5	0.20
	3-position	All ports closed	2.3	0.32	2.1	0.21
		ABR connection	2.3	0.30	2.2	0.22
		PAB connection	2.4	0.02	2.3	0.19

Note: Formula to calculate sonic conductance C from effective cross-sectional area S is S ≈ 5.0 x C.

How to order

● Single unit

W4GB2 1 0 - 08 - R1 H - 3

W3GB2 66 0 - 08 - R1 H - 3

● Single sub-plate only

W4GB2 - SP - 08 - R1 F

● Single valve for mounting base

W4GB2 1 9 - 00 — H - 3

● 3-port discrete valve for mounting base

W3GB2 66 9 - 00 — H - 3

Ⓐ Solenoid position

Ⓑ Port size

Ⓒ Electrical connections
For circuit diagrams (solenoid valve interior), refer to page 970 for details.

Ⓓ Option

Ⓔ Voltage

Code	Description		Single unit W3GB2	Single unit W4GB2	Single sub-plate only	SingleBody valve W3GB2	SingleBody valve W4GB2
			3-port valve	5-port valve		3-port valve	5-port valve
Ⓐ Solenoid position							
1	2 position single			●			●
2	2-position double			●			●
3	3-position all ports closed			●			●
4	3-position ABR connection			●			●
5	3-position PAB connection			●			●
66	Two 3-port valves integrated (*1)	ASide valve: Normally closed	●			●	
		B side valve: Normally closed					
Ⓑ Port size							
08	Rc1/4		●	●	●		
Ⓒ Electrical connections (lamp and surge suppressor)Standard equipment)							
Blank	Terminal block (with cable clamp)		●	●	●	●	●
R 1	I/O connector (500 mm) (made to order)		●	●	●		
Ⓓ Option							
Blank	No option		●	●	●	●	●
M	Manual override of non-locking	(*1)	●	●		●	●
M7	Manual device with OFF function	(*1)	●	●		●	●
H	With check valve	(*2)	●	●		●	●
A	Ozone/coolant proof product		●	●		●	●
F	Port P/A/B filter integrated		●	●	●		
Ⓔ Voltage							
1	100 VAC (rectifier integrated) * Electrical connections: Only when Blank is selected		●	●		●	●
3	24 VDC		●	●		●	●
4	12 VDC		●	●		●	●

⚠ Precautions for model selection

*1: Manual override of non-locking (M) and manual override with OFF function (M7) cannot be selected together.

***2:** 3-position all ports closed and PAB connection are not provided with the check valve specifications (H).
Refer to page 1105 for details on the exhaust check valve.

Electrical connections

Name	Terminal block	I/O connector
Code	Blank	R1
Shape / Terminal Layout	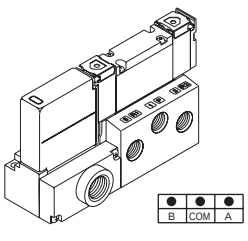	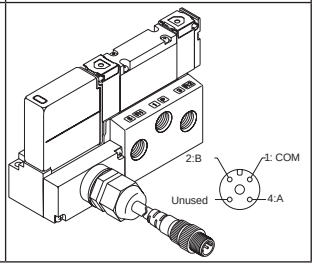

Parts kit No. for terminal block

● Cable clamp (with gasket)

Model No.	Description
W4G-BMS-038GP	Used to protect cables from dust and jetting water.

(reference value)
Body tightening torque 2.0 to 2.5 N·m
Cable clamp tightening torque 1.5 to 2.0 N·m

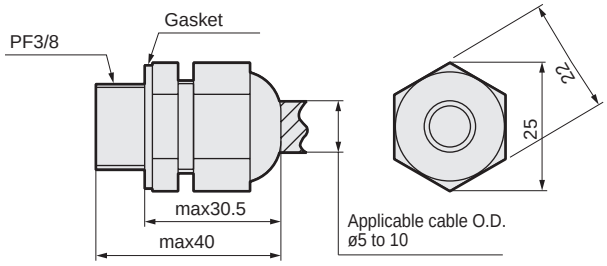

Ozone-proof specifications • Coolant proof specifications

Select option "A" of Item Ⓓ in How to order.

Specifications for rechargeable battery (Catalog No. CC-1226A)

For use in the rechargeable battery manufacturing process, materials used for all parts are limited

** - Voltage - **P40**

CE marking specifications

** - Voltage - **ST**

- Standard voltage of 24 VDC or less is CE marking-compatible even if the model No. is not indicated with "ST".

Dimensions CAD

W4GB210

● Terminal block (blank)

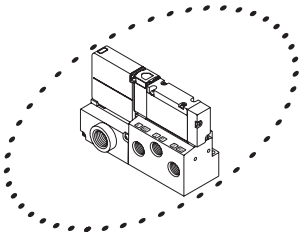

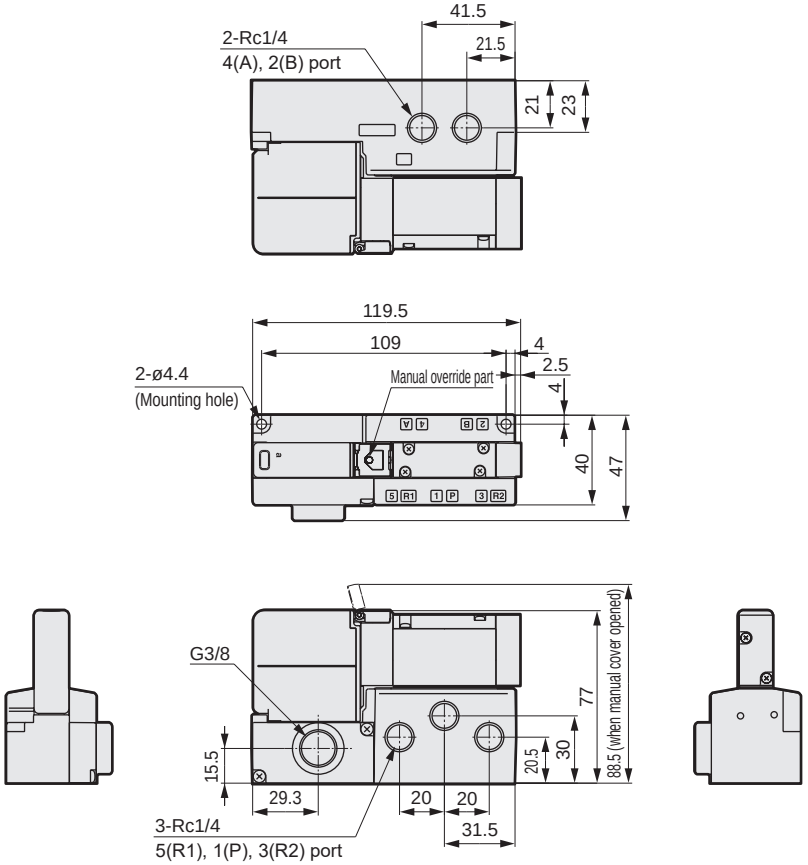

Note: For I/O connector (R1), refer to page 975.

W4GB220/W3GB2660

● Terminal block (blank)

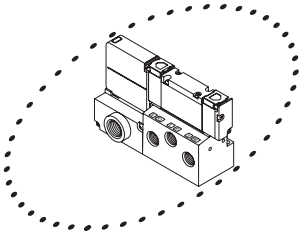

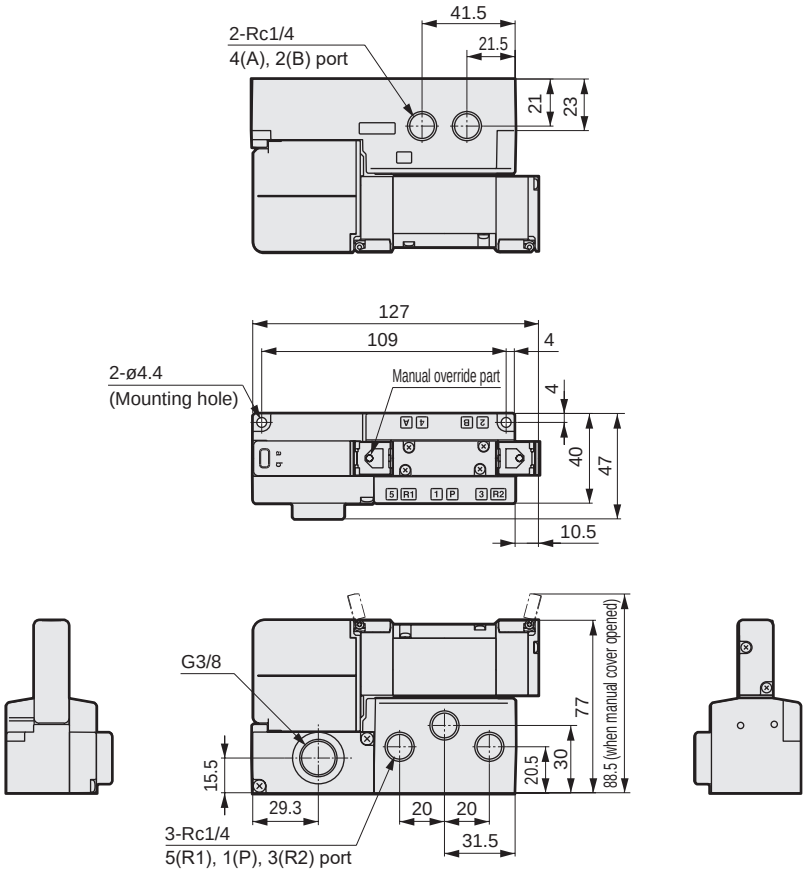

Dimensions CAD

W4GB2$^{3}_{4}_{5}$0

● Terminal block (blank)

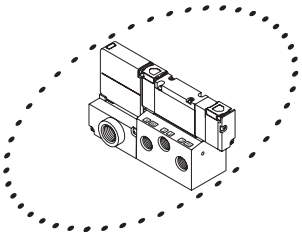

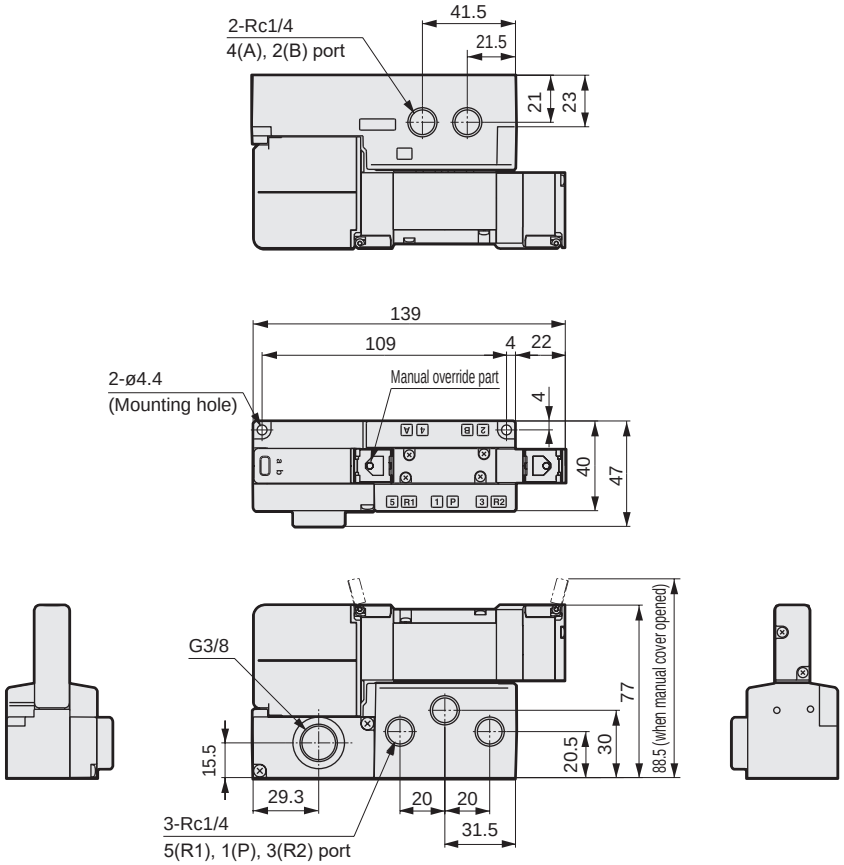

● I/O connector (R1)

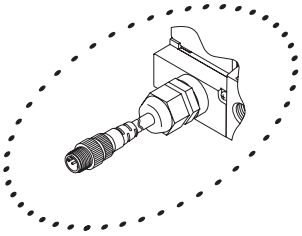

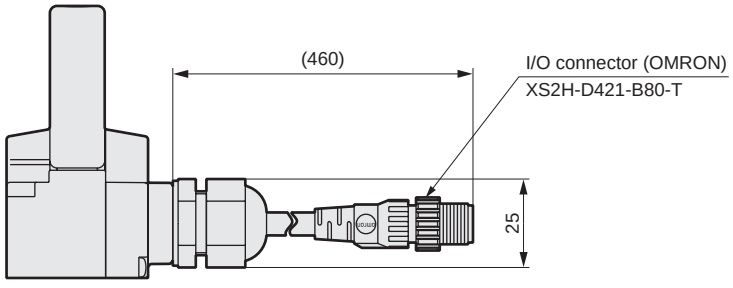

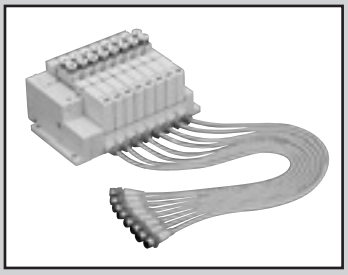

Individual wiring manifold
Body piping

MW$^{3}_{4}$GA2-R1 Series

● Cylinder bore size: ø20 to ø80

RoHS

Manifold common specifications

1 MPa ≈ 145.0 psi, 1 MPa = 10 bar

Item		MW3GA2/MW4GA2
Manifold		Block manifold
Air supply and exhaust method		Common supply/common exhaust (with check valve built-in)
Pilot exhaust method	Internal pilot	Main valve/pilot valve common exhaust (pilot exhaust check valve built-in)
	External pilot	Main valve/pilot valve individual exhaust
Valve and operation		Pilot operated soft spool valve
Working fluid		Compressed air
Max. working pressure MPa		0.7 (≈101 psi, 7 bar)
Min. working pressure MPa		0.2 (≈29 psi, 2 bar) (*3)
Proof pressure MPa		1.05 (≈152 psi, 10 bar)
Ambient temperature °C		-5 (23°F) to 55 (131°F) (no freezing)
Fluid temperature °C		5 (41°F) to 55 (131°F)
Manual override		Non-locking/locking common (standard)
Lubrication (*1)		Not required
Degree of protection (*2)		Dust proof/jet proof (IP65 or equivalent)
Vibration resistance m/s^2		49 or less
Shock resistance m/s^2		294 or less
Atmosphere		Cannot be used in corrosive gas environments

*1 : Use turbine oil Class 1 ISO VG32 for lubrication.
Note that excessive lubricant may cause unstable operation.
*2 : Tested according to the test method for IP65 (IEC60529 [IEC529: 1989-11]) standards.
For details, refer to page 1103.
*3 : The working pressure range is 0 to 0.7 MPa when the external pilot (option code: K) is selected.
Set the external pilot pressure between 0.2 and 0.7 MPa.

Electrical specifications

Item		MW3GA2/MW4GA2
Rated voltage V	DC	12, 24
Voltage fluctuation range		±10%
Holding current A	24 VDC	0.025
	12 VDC	0.050
Power consumption W (*4)	24 VDC	0.6
	12 VDC	0.6
Thermal class		B

*4: Surge suppressor and indicator are equipped as standard.

JIS symbol

● 3-port valve
2-position single NC

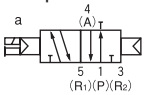

2-position single NO

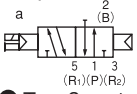

● Two 3-port valves integrated
(A side valve: NC, B side valve: NC)

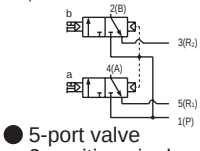

● 5-port valve
2-position single

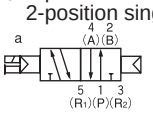

2-position double

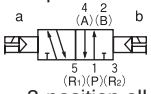

3-position all ports closed

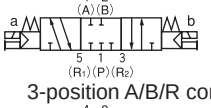

3-position A/B/R connection

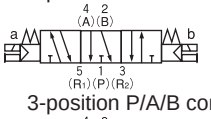

3-position P/A/B connection

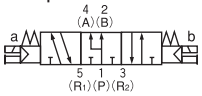

Individual specifications

Item		MW3GA2/MW4GA2
Max. station No.		16
Port size	Port A/B	Push-in fitting ø4, ø6, ø8, Rc1/8
	Port P/R	Push-in fitting ø8, ø10

Refer to page 978 for weight.

Performance/characteristics by model

Item			MW3GA2/MW4GA2	
			ON	OFF
Response time ms	Two 3-port valves integrated		12	29
	2-position	Single	22	24
		Double	26	-
	3-position		25	35

The response times are values with supply pressure of 0.5 MPa at 20°C and without lubrication. They depend on the pressure and the lubricant quality.

Flow characteristics

Model No.	Solenoid position		P→A/B		A/B→R	
			C[dm^3/(s·bar)]	b	C[dm^3/(s·bar)]	b
MW3GA2	Two 3-port valves integrated		1.7	0.37	2.2	0.13
MW3GA2 MW4GA2	2-position		2.2	0.35	1.7	0.25
	3-position	All ports closed	2.0	0.36	2.2	0.21
		ABR connection	2.1	0.34	1.7	0.26
		PAB connection	2.3	0.35	2.3	0.27

*1: Effective cross-sectional area S and sonic conductance C are converted as S ≈ 5.0 x C.
*2: Values of the 2-position type and ABR connection type are those with integrated check valve.

How to order

Individual wiring I/O connector

● Manifold model No.

MW4GA2 1 0 - C8 — R1 H D - 5 - 3

● 3-port manifold model No.

NW3GA2 66 0 - C8 — R1 H D - 5 - 3

● Discrete valve block with solenoid valve

NW4GA2 1 0 - C8 — R1 H —— 3

● Discrete valve block with 3-port solenoid valve

NW3GA2 66 0 - C8 — R1 H —— 3

● Single valve for mounting base

W4GA2 1 9 - C8 —— H —— 3

● 3-port discrete valve for mounting base

W3GA2 66 9 - C8 —— H —— 3

Ⓐ Model No.
Ⓑ Solenoid position
Ⓒ Port size (*1)
Ⓓ Wiring method
For circuit diagrams (inside the solenoid valve), refer to page 970
Ⓔ Option
Ⓕ Mount type
Ⓖ Station No.
Ⓗ Voltage

Code	Description	Ⓐ Model No.					
		Manifold		Discrete valve block with solenoid valve		Discrete valve	
		3-port valve	5-port valve	3-port valve	5-port valve	3-port valve	5-port valve
		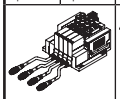		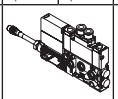			
		MW3GA2	MW4GA2	NW3GA2	NW4GA2	W3GA2	W4GA2
Ⓑ OffReplacement position							
1	2 position single		●		●		●
2	2-position double		●		●		●
3	3-position all ports closed		●		●		●
4	3-position ABR connection		●		●		●
5	3-position PAB connection		●		●		●
1	2-position single normally closed	●		●		●	
11	2-position single normally open	●		●		●	
66	Two 3-port valves integrated (*7) — A side valve: Normally closed / B side valve: Normally closed	●		●		●	
8	Mix manifold (when there are multiple solenoid positions)	●	●				
Ⓒ Port size (port A/B)							
C4	ø4 push-in fitting	●	●	●	●	●	●
C6	ø6 push-in fitting	●	●	●	●	●	●
C8	ø8 push-in fitting	●	●	●	●	●	●
CX	Push-in fitting mix	●	●				
06	Rc1/8	●	●	●	●	●	●
Ⓓ Wiring method (including standard lamp and surge suppressor)							
R 1	I/O connector (M12) (500 mm)	●	●	●	●		
Ⓔ Option							
Blank	No option	●	●	●	●	●	●
M	Manual override of non-locking (*2)	●	●	●	●	●	●
M7	Manual device with OFF function(*2)	●	●	●	●	●	●
H	With check valve (*3)	●	●	●	●	●	●
K	External pilot	●	●				
A	Ozone/coolant proof product	●	●	●	●	●	●
F	Port A/B filter built in (*4)	●	●	●	●	●	●
Z1	Air supply spacer (*5)	●	●				
Z3	Exhaust spacer (*5)	●	●				
Z8	Individual air supply compatible spacer with in-stop valve spacer (*6)(*7)	●	●				
Ⓕ Mount type							
Blank	Direct mount	●	●				
D	DIN rail mount	●	●				
Ⓖ Station No.							
2 to 16	2 stations to 16 stations	●	●				
Ⓗ Voltage							
3	24 VDC	●	●	●	●	●	●
4	12 VDC	●	●	●	●	●	●

indicates not available.

⚠ Precautions for model selection

Be sure to fill in the "Manifold specifications sheet".

*1: Specify the size of port P/R in the supply and exhaust block section.
*2: Manual override of non-locking (M) and manual override with OFF function (M7) cannot be selected together.
***3: Check valve (H) is not available for 3-position all ports closed and PAB connection. Refer to page 1105 for details on the check valve.**
*4: A filter is built into port P.
***5: Specify the spacer mounting position and quantity in manifold specifications sheet. Stacking of spacers is not possible. Combination with the masking plate is not supported. For details, refer to page 1057.**
*6: Not available when the fitting for port A/B is elbow.
*7: Not compatible with combination with external pilot (K).

Ozone-proof specifications • Coolant proof specifications

Select option "A" of Item Ⓔ in How to order.

Specifications for rechargeable battery (Catalog No. CC-1226A)

● For use in the rechargeable battery manufacturing process, materials used for all parts are limited

** - Voltage - **P40**

CE marking specifications

** - Voltage - **ST**

• Standard voltage of 24 VDC or less is CE marking-compatible even if the model No. is not indicated with "ST".

Manifold components explanation and parts list

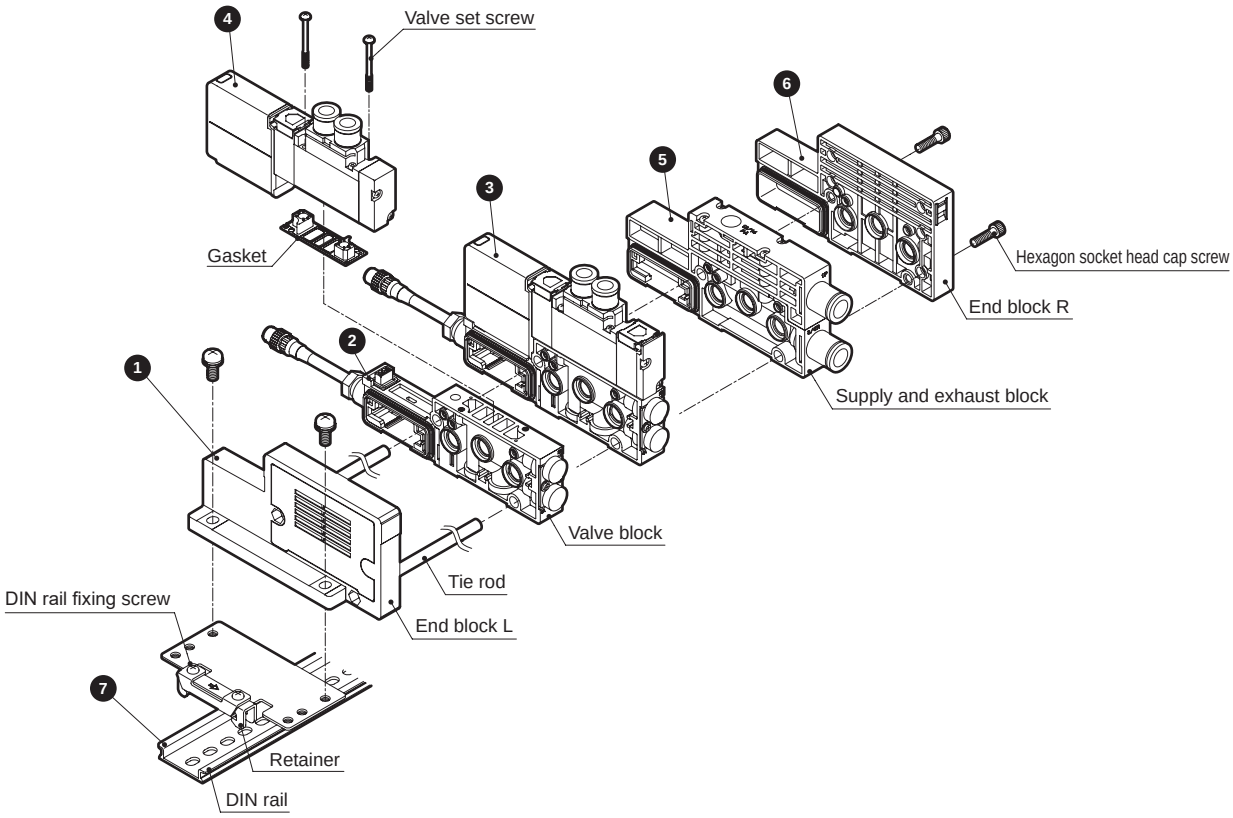

List of main components (refer to pages 1048 to 1063 for details)

No.	Component name	Model No. (example)	No.	Component name	Model No. (example)
1	End block	NW4G2-EL	4	Discrete solenoid valve for manifold	W4GA219-C8-H-3
2	Discrete valve block	NW4GA2-V-R1	5	Supply and exhaust block	NW4G2-Q-10
3	Discrete valve block with solenoid valve	NW4GA220-C8-R1H-3	6	End block R	NW4G2-ER
			7	DIN rail	N4G-BAA (Length)

Weight (for DC)

NW4GA2

(g)

Part name	Model No.	Weight	Part name	Model No.	Weight
Valve block with solenoid valve	NW3GA210-*-R1*-*	220	Valve block with masking plate	NW4GA2-MP-R1	141
	NW3GA2110-*-R1*-*	220	Valve block	NW4GA2-V*-R1	111
	NW4GA210-*-R1*-*	225			
	NW4GA220-*-R1*-*	241			
	NW4GA2$^{3}_{4}$0-*-R1*-*	248			

Common

(g)

Part name	Model No.	Weight	Part name	Model No.	Weight
Supply and exhaust block	NW4G2-Q-*	137	End block	NW4G2-EL	91
	NW4G2-QK-*	140		NW4G2-EXL	96
	NW4G2-QZ-*	137	Air supply spacer	W4G2-P(K)-*	60
	NW4G2-QKZ-*	143	Exhaust spacer	W4G2-R-*-*	60
End block	NW4G2-ER	91	Spacer pilot check valve	W4G2-PC-M	183
	NW4G2-EXR	96	Individual air supply compatible spacer with in-stop valve spacer	W4G2-PIS-*	115
			DIN rail	N4G-BAA*	0.19/mm

Repair parts and related parts list

Applicable	Part name	Model No.	Applicable	Part name	Model No.
Valve	Cartridge fitting ø4 straight	4G2-JOINT-C4	Supply and exhaust block port P/R	Cartridge fitting ø8 straight	N4G2-Q-JOINT-8
	Cartridge fitting ø6 straight	4G2-JOINT-C6		Cartridge fitting ø10 straight	N4G2-Q-JOINT-10
	Cartridge fitting ø8 straight	4G2-JOINT-C8		Cartridge fitting ø8 (short) elbow	N4G2-Q-JOINT-8L
	Plug cartridge	4G2-JOINT-CPG		Cartridge fitting ø8 long elbow	N4G2-Q-JOINT-8LL
Supply and exhaust block port PA	Cartridge fitting ø6 straight	N4G2-QK-JOINT-6		Cartridge fitting ø10 (short) elbow	N4G2-Q-JOINT-10L
	Cartridge fitting ø6 elbow	N4G2-QK-JOINT-6L		Cartridge fitting ø10 long elbow	N4G2-Q-JOINT-10LL
				Plug cartridge	N4G2-Q-JOINT-PG

Dimensions

MW4GA2

● I/O connector (R1)

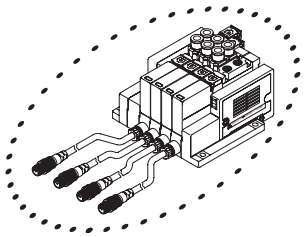

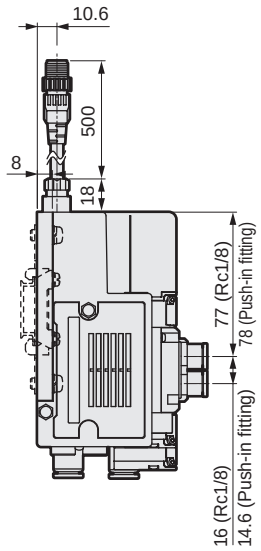

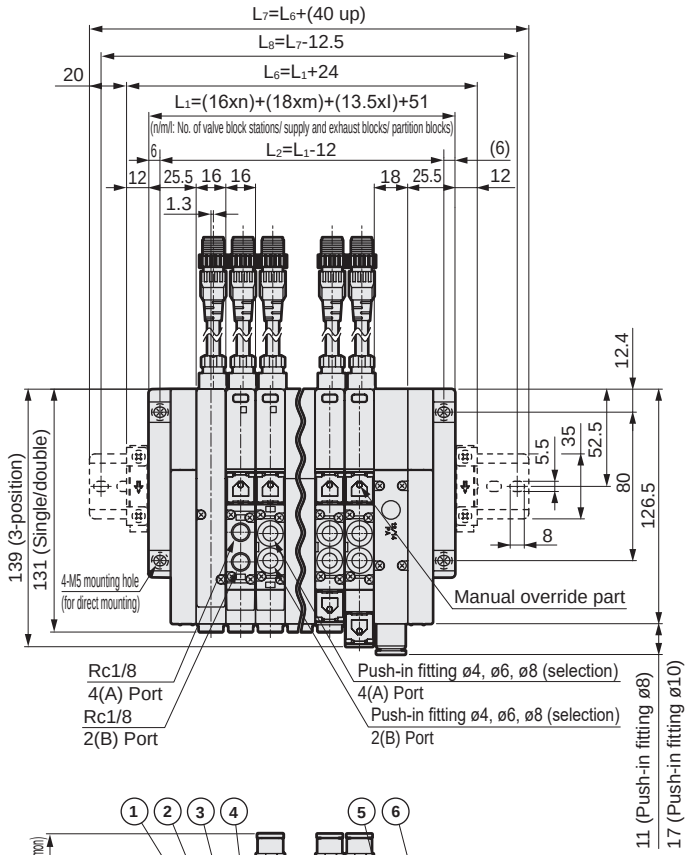

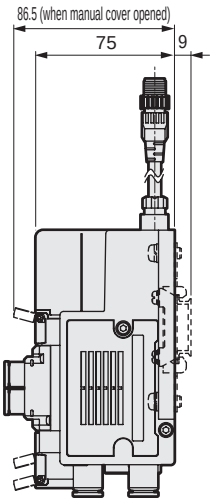

* I/O connector pin layout

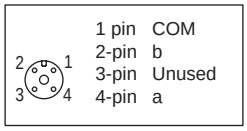

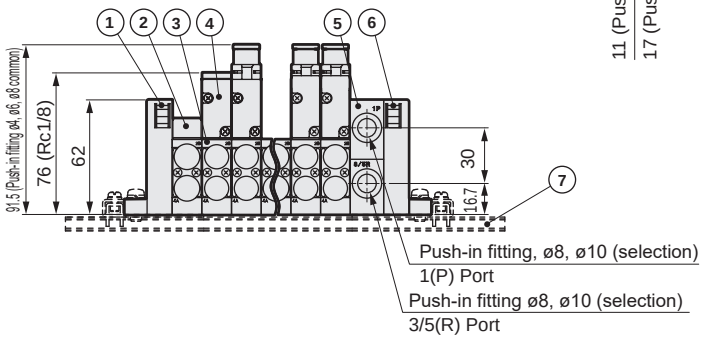

No.	Part name
1	End block L
2	Masking plate
3	Valve block (with I/O connector cable)
4	Solenoid valve body
5	Supply and exhaust block
6	End block R
7	DIN rail

● Push-in L fitting for supply and exhaust block (upward)

● ø8(CL8)

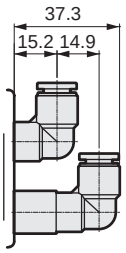

● ø10(CL10)

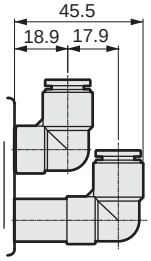

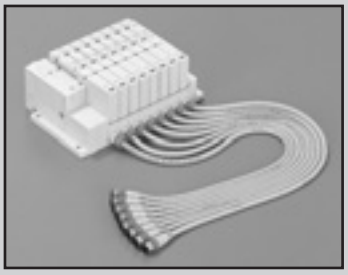

Individual wiring manifold
Base side piping/base bottom piping

$MW^{3}_{4}G^{B}_{Z}2$-R1 Series

● Cylinder bore size: ø20 to ø80

RoHS

Manifold common specifications

Item	$MW^{3}_{4}GB2$	$MW^{3}_{4}GZ2$
Manifold	Block manifold	
Supply and exhaust method	Common supply/common exhaust (with check valve built-in)	
Pilot exhaust method	Internal pilot: Main valve/pilot valve common exhaust (pilot exhaust check valve built-in)	
	External pilot: Main valve/pilot valve individual exhaust	
Piping direction	Lateral direction from base	Downward from base
Valve and operation	Pilot operated soft spool valve	
Working fluid	Compressed air	
Max. working pressure MPa	0.7 (≈100 psi, 7 bar)	
Min. working pressure MPa	0.2 (≈29 psi, 2 bar) (*3)	
Proof pressure MPa	1.05 (≈150 psi, 10.5 bar)	
Ambient temperature °C	-5 (23°F) to 55 (131°F) (no freezing)	
Fluid temperature °C	5 (41°F) to 55 (131°F)	
Manual override	Non-locking/locking common (standard)	
Lubrication (*1)	Not required	
Degree of protection (*2)	Dust proof/jet proof (IP65 or equivalent)	
Vibration resistance m/s^2	49 or less	
Shock resistance m/s^2	294 or less	
Atmosphere	Cannot be used in corrosive gas environments	

*1 : Use turbine oil Class 1 ISO VG32 for lubrication.
Note that excessive lubricant may cause unstable operation.
*2 : Tested according to the test method for IP65 (IEC60529 (IEC529: 1989-11)) standards.
Refer to page 1103 for details.
*3 : The working pressure range is 0 to 0.7 MPa when the external pilot (option code: K) is selected.
Set the external pilot pressure between 0.2 and 0.7 MPa.

Electrical specifications

Item		$M^{3}_{4}GB2$
Rated voltage V	DC	12, 24
Voltage fluctuation range		±10%
Holding current A	24 VDC	0.025
	12 VDC	0.050
Power consumption W (*4)	24 VDC	0.6
	12 VDC	0.6
Thermal class		B

*4: Surge suppressor and indicator are supplied as standard.

JIS symbol

● Two 3-port valves integrated
(A side valve: NC, B side valve: NC)

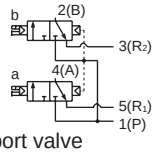

● 5-port valve

2-position single

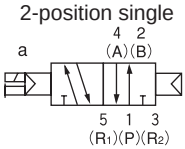

2-position double

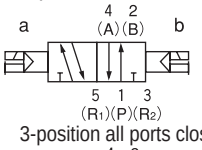

3-position all ports closed

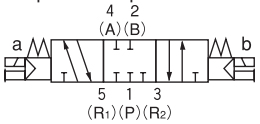

3-position A/B/R connection

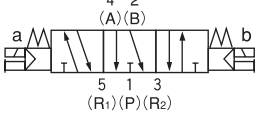

3-position P/A/B connection

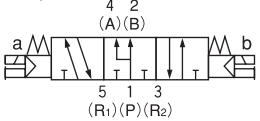

Individual specifications

Item		$MW^{3}_{4}GB2/MW^{3}_{4}GZ2$
Max. station No.		16
Port size	A/B Port	Push-in fitting ø4, ø6, ø8, Rc1/8
	P/R port	Push-in fitting ø8, ø10

For weight, refer to page 984.

Performance/characteristics by model

Item			$MW^{3}_{4}GB2/MW^{3}_{4}GZ2$ ON	$MW^{3}_{4}GB2/MW^{3}_{4}GZ2$ OFF
Response time ms	Two 3-port valves integrated		12	29
	2-position	Single	22	24
		Double	26	-
	3-position		25	35

The response time is the value with supply pressure of 0.5 MPa at 20°C and without lubrication. It depends on the pressure and the lubricant quality.

Flow characteristics

Model No.	Solenoid position		P→A/B		A/B→R	
			C[dm³/(s·bar)]	b	C[dm³/(s·bar)]	b
MW3GB2	Two 3-port valves integrated		1.7	0.42	2.2	0.15
MW4GB2 **MW4GZ2**	2-position		2.4	0.36	1.7	0.25
	3-position	All ports closed	2.1	0.37	2.2	0.22
		ABR connection	2.2	0.35	1.7	0.25
		PAB connection	2.3	0.32	2.3	0.24

*1: Effective cross-sectional area S and sonic conductance C are converted as S ≈ 5.0 x C.
*2: Values of the 2-position type and ABR connection type are those with integrated check valve.

Ozone-proof specifications • Coolant proof specifications

Select option “A” of Item Ⓔ in How to order on pages 982 and 983.

Specifications for rechargeable battery (Catalog No. CC-1226A)

For use in the rechargeable battery manufacturing process, materials used for all parts are limited

** -Voltage - **P40**

CE marking specifications

** - Voltage - **ST**

• Standard voltage of 24 VDC or less is CE marking-compatible even if the model No. is not indicated with "ST".

MW4GB2-R1 Series

Individual wiring manifold; base side piping/base bottom piping

How to order

Individual wiring I/O connector

● Manifold model No.

MW4GB2 1 0 - C8 – R1 H D - 5 - 3

● 3-port manifold model No.

MW3GB2 66 0 - C8 – R1 H D - 5 - 3

● Discrete valve block with solenoid valve

NW4GB2 1 0 - C8 – R1 H ——— 3

● Discrete valve block with 3-port solenoid valve

NW3GB2 66 0 - C8 – R1 H ——— 3

● Single valve for mounting base

W4GB2 1 9 - 00 ——— H ——— 3

● 3-port discrete valve for mounting base

W3GB2 66 9 - 00 ——— H ——— 3

Ⓐ Model No.
Ⓑ Solenoid position
Ⓒ Port size (*1) (*2)
Ⓓ Wiring method
Ⓔ Option (*3)
Ⓕ Mount Type
Ⓖ Station No.
Ⓗ Voltage

For circuit diagrams (solenoid valve interior), refer to page 970.

Precautions for model selection

Be sure to fill in the "Manifold specifications sheet".

*1: Ports A and B plug specifications (*NC/*NO) are available for 2-position single only. Specify the port P/R bore size in the supply and exhaust block section.

2: CL push-in L fitting (upward) is available for the single and double types only. Long elbow is for port A and short elbow for port B.
Ports A and B are the same size in the push-in L fitting (upward) mix (CX). If CL* NC/NO is selected, the fitting is a short elbow.

***3 : Specify the spacer mounting position and quantity on the manifold specifications sheet. Stacking of spacers is not possible.**
Combination with the masking plate is not supported.
For details, refer to page 1057.

*4: Manual override of non-locking (M) and manual override with OFF function (M7) cannot be selected together.

***5: Check valve (H) is not available for 3-position all ports closed and PAB connection.**
Refer to page 1105 for details on the check valve.

*6: A filter is built into port P.

*7: Not available when the fitting for port A/B is elbow.

*8: Not compatible with combination with external pilot (K).

Code	Description		Ⓐ Model No. Manifold MW3GB2	MW4GB2	Discrete valve block with solenoid valve NW3GB2	NW4GB2	Discrete valve W3GB2	W4GB2
Ⓑ Solenoid position								
1	2 position single			●		●		●
2	2-position double			●		●		●
3	3-position all ports closed			●		●		●
4	3-position ABR connection			●		●		●
5	3-position PAB connection			●		●		●
66	Two 3-port valves Integrated(*8)	A side valve: Normally closed	●		●		●	
		B side valve: Normally closed						
8	Mix manifold (when there are multiple solenoid positions)		●	●				
Ⓒ Port size (port A/B)								
C4	ø4 push-in fitting		●	●	●	●		
C6	ø6 push-in fitting		●	●	●	●		
C8	ø8 push-in fitting		●	●	●	●		
CL6	ø6 push-in L-fitting (upward)		●	●	●	●		
CL8	ø8 push-in L-fitting (upward)		●	●	●	●		
CX	Push-in fitting mix		●	●				
1 side plug	Port A	Port B						
C4NC	ø4 push-in fitting	Plug	●	●	●	●		
C6NC	ø6 push-in fitting	Plug	●	●	●	●		
C8NC	ø8 push-in fitting	Plug	●	●	●	●		
C4NO	Plug	ø4 push-in fitting	●	●	●	●		
C6NO	Plug	ø6 push-in fitting	●	●	●	●		
C8NO	Plug	ø8 push-in fitting	●	●	●	●		
CL6NC	ø6 push-in L-fitting (upward)	Plug	●	●	●	●		
CL8NC	ø8 push-in L-fitting (upward)	Plug	●	●	●	●		
CL6NO	Plug	ø6 push-in L-fitting (upward)	●	●	●	●		
CL8NO	Plug	ø8 push-in L-fitting (upward)	●	●	●	●		
Ⓓ Wiring method (including standard lamp and surge suppressor)								
R1	I/O connector (M12) (500 mm)		●	●	●	●		
Ⓔ Option								
Blank	No option		●	●	●	●	●	●
M	Manual override of non-locking (*4)		●	●	●	●	●	●
M7	Manual device with OFF function (*4)		●	●	●	●	●	●
H	With check valve (*5)		●	●	●	●	●	●
K	External pilot		●	●				
A	Ozone/coolant proof product		●	●	●	●	●	●
F	Port A/B filter built in (*6)		●	●	●	●		
Z1	Air supply spacer (*3)(*7)		●	●				
Z3	Exhaust spacer (*3)(*7)		●	●				
Z6	Spacer pilot check valve (*3)(*7)		●	●				
Z8	Individual air supply compatible spacer with in-stop valve spacer (*3)(*7)(*8)		●	●				
Ⓕ Mounting								
Blank	Direct mount		●	●				
D	DIN rail mount		●	●				
Ⓖ Station No.								
2 to 16	2 stations to 16 stations		●	●				
Ⓗ Voltage								
3	24 VDC		●	●	●	●	●	●
4	12 VDC		●	●	●	●	●	●

indicates not available.

How to order

Individual wiring I/O connector

● Manifold model No.

MW4GZ2 1 0 - C8 – R1 H — 5 - 3

● 3-port manifold model No.

MW3GZ2 66 0 - C8 – R1 H — 5 - 3

● Discrete valve block with solenoid valve

NW4GZ2 1 0 - C8 – R1 H — 3

● Discrete valve block with 3-port solenoid valve

NW3GZ2 66 0 - C8 – R1 H — 3

● Discrete valve for integrated base (*1)

W4GB2 1 9 - 00 — H — 3

● 3-port discrete valve for integrated base

W3GB2 66 9 - 00 — H — 3

Ⓐ Model No.
Ⓑ Solenoid position
Ⓒ Port size (*2) (*3)
Ⓓ Wiring method
For circuit diagrams (solenoid valve interior), refer to page 970.
Ⓔ Option (*4)
Ⓕ Mounting
Ⓖ Station No.
Ⓗ Voltage

Code	Description	Ⓐ Model No.					
		Manifold		Discrete valve block with solenoid valve		Discrete valve	
		MW3GZ2	MW4GZ2	NW3GZ2	NW4GZ2	W3GB2	W4GB2
Ⓑ Solenoid position							
1	2-position single		●		●		●
2	2-position double		●		●		●
3	3-position all ports closed		●		●		●
4	3-position ABR connection		●		●		●
5	3-position PAB connection		●		●		●
66	Two 3-port valves integrated (*9) A side valve: Normally closed	●		●		●	
	Two 3-port valves integrated (*9) B side valve: Normally closed	●		●		●	
8	Mix manifold (for multiple solenoid positions)	●	●				
Ⓒ Port size (port A/B)							
C4	ø4 push-in fitting	●	●	●	●		
C6	ø6 push-in fitting	●	●	●	●		
C8	ø8 push-in fitting	●	●	●	●		
CX	Push-in fitting mix	●	●				
1 side plug	Port A: ø4 push-in fitting / Port B: Plug	●	●	●	●		
C4NC							
1 side plug	Port A: ø6 push-in fitting / Port B: Plug	●	●	●	●		
C6NC							
1 side plug	Port A: ø8 push-in fitting / Port B: Plug	●	●	●	●		
C8NC							
1 side plug	Port A: Plug / Port B: ø4 push-in fitting	●	●	●	●		
C4NO							
1 side plug	Port A: Plug / Port B: ø6 push-in fitting	●	●	●	●		
C6NO							
1 side plug	Port A: Plug / Port B: ø8 push-in fitting	●	●	●	●		
C8NO							
Ⓓ Wiring method (including standard lamp and surge suppressor)							
R1	I/O connector (M12) (500 mm)	●	●	●	●		
Ⓔ Option							
Blank	No option	●	●	●	●	●	●
M	Non-locking manual override (*5)	●	●	●	●	●	●
M7	Manual override with OFF function (*5)	●	●	●	●	●	●
H	Check valve (*6)	●	●	●	●	●	●
K	External pilot	●	●				
A	Ozone/coolant proof product	●	●	●	●	●	●
F	A/B port filter integrated (*7)	●	●	●	●		
Z1	Air supply spacer (*4)	●	●				
Z3	Exhaust spacer (*4)	●	●				
Z6	Spacer pilot check valve (*4) (*8)	●	●				
Z8	Individual air supply compatible spacer with in-stop valve spacer (*4) (*8) (*9)	●	●				
Ⓕ Mounting							
Blank	Direct mount	●	●				
Ⓖ Station No.							
2 to 16	2 stations to 16 stations	●	●				
Ⓗ Voltage							
3	24 VDC	●	●	●	●	●	●
4	12 VDC	●	●	●	●	●	●

indicates not available.

⚠ Precautions for model selection

Be sure to fill in the "Manifold specifications sheet".

*1 : The W4GB2*9 discrete solenoid valve is used for the NW4GZ2 discrete valve block with solenoid valve.
*2 : Plugs of ports A and B (*NC/*NO) are available for 2-position single only.
Specify the port P/R bore size in the supply and exhaust block section.
3 : CL push-in L fitting (upward) is available for the single and double types only. Long elbow is for port A and short elbow for port B.
Ports A and B are the same size in the push-in L fitting (upward) mix (CX). If CL* NC/NO is selected, the fitting is a short elbow.
*4 : Specify the spacer mounting position and quantity on the manifold specifications sheet. Stacking of spacers is not possible.
Combination with the masking plate is not supported.
For details, refer to page 1057.
*5 : Non-locking manual override (M) and manual override with OFF function (M7) cannot be selected together.
*6 : Check valve (H) is not available for 3-position all ports closed and PAB connection.
Refer to page 1105 for details on the check valve.
*7 : A filter is built into port P.
*8 : Not available when the fitting for port A/B is an elbow.
*9 : Not compatible in combination with external pilot (K).

Manifold components explanation and parts list

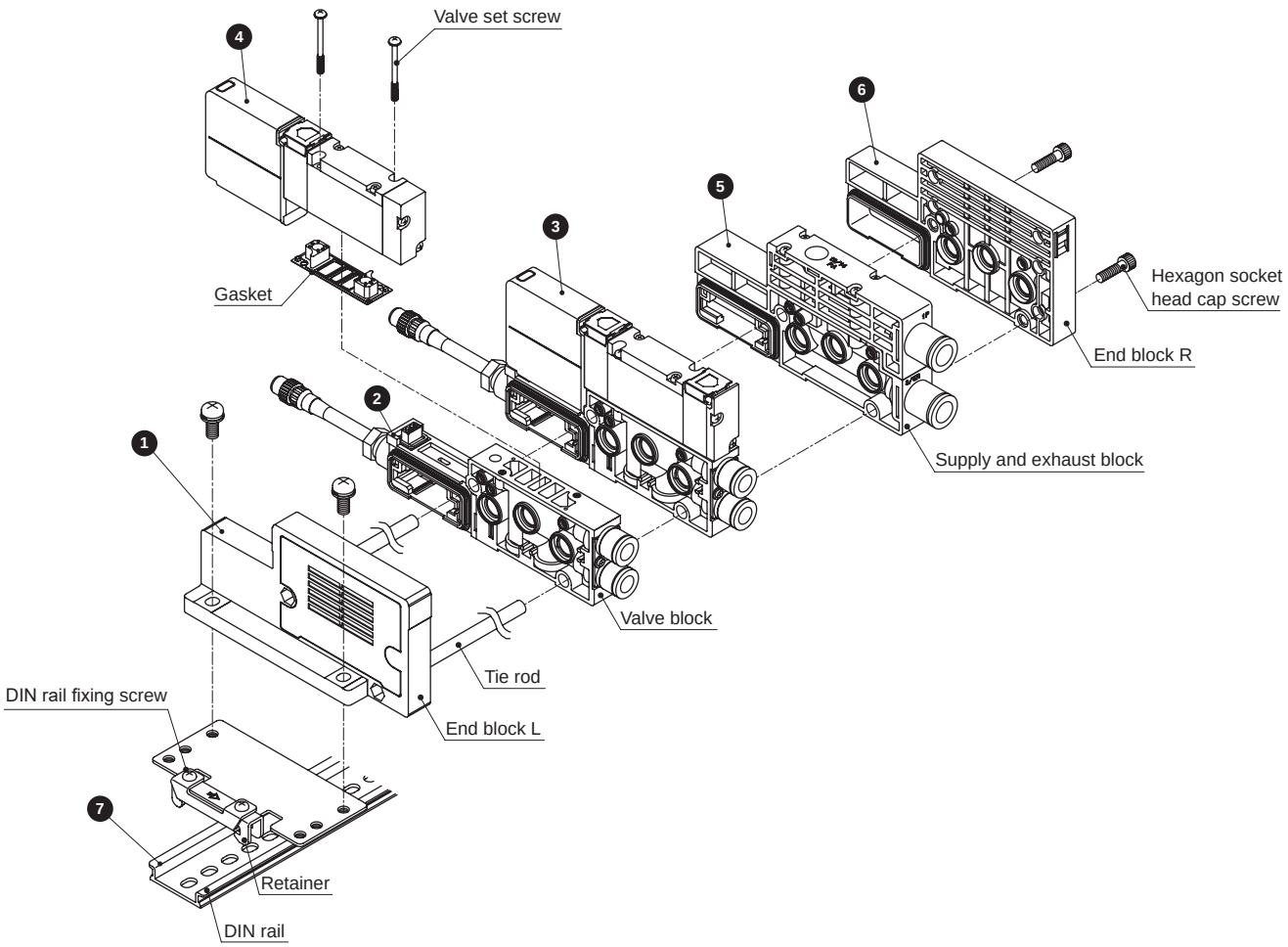

List of main components (refer to pages 1048 to 1063 for details)

No.	Component name	Model No. (example)	No.	Component name	Model No. (example)
1	End block	NW4G2-EL	4	Discrete solenoid valve for manifold	W4GB219-00-H-3
2	Discrete valve block	NW4GB2-V-C8-R1	5	Supply and exhaust block	NW4G2-Q-10
3	Discrete valve block with solenoid valve	NW4GB220-C8-R1H-3	6	End block R	NW4G2-ER
			7	DIN rail	N4G-BAA (Length)

Weight (for DC)

NW4GB2

Part name	Model No.	Weight
Valve block with solenoid valve	NW4GB210-*-R1*-*	216
	NW4GB220-*-R1*-*	232
	NW4GB2$^{3}_{5}$0-*-R1*-*	239
Valve block with masking plate	NW4GB2-MP-C8-R1	152
Valve block	N4GB2-V*-*-R1	122

NW4GZ2 (g)

Part name	Model No.	Weight
Valve block with solenoid valve	NW4GZ210-*-R1*-*	216
	NW4GZ220-*-R1*-*	231
	NW4GZ2$^{3}_{5}$0-*-R1*-*	238
Valve block with masking plate	NW4GZ2-MP-C8-R1	151
Valve block	NW4GZ2-V*-*-R1	121

COMMON (g)

Part name	Model No.	Weight
Supply and exhaust block	NW4G2-Q-*	137
	NW4G2-QK-*	140
	NW4G2-QZ-*	137
	NW4G2-QKZ-*	143
End block	NW4G2-ER	91
	NW4G2-EXR	96

Part name	Model No.	Weight
End block	NW4G2-EL	91
	NW4G2-EXL	96
Air supply spacer	W4G2-P(K)-*	60
Exhaust spacer	W4G2-R-*-*	60
Spacer pilot check valve	W4G2-PC-M	183
Individual air supply compatible spacer with in-stop valve spacer	W4G2-PIS-*	115
DIN rail	N4G-BAA*	0.19/mm

Parts list

● Push-in cartridge fitting

No.	Part name	Model No.
Valve block	Cartridge fitting ø4 straight	4G2-JOINT-C4
	Cartridge fitting ø6 straight	4G2-JOINT-C6
	Cartridge fitting ø8 straight	4G2-JOINT-C8
	Cartridge fitting ø6 (short) elbow	4G2-JOINT-CL6
	Cartridge fitting ø6 long elbow	4G2-JOINT-CLL6
	Cartridge fitting ø8 (short) elbow	4G2-JOINT-CL8
	Cartridge fitting ø8 long elbow	4G2-JOINT-CLL8
	Plug cartridge	4G2-JOINT-CPG
Supply and exhaust block port P/R	Cartridge fitting ø8 straight	N4G2-Q-JOINT-8
	Cartridge fitting ø10 straight	N4G2-Q-JOINT-10
	Cartridge fitting ø8 (short) elbow	N4G2-Q-JOINT-8L
	Cartridge fitting ø8 long elbow	N4G2-Q-JOINT-8LL
	Cartridge fitting ø10 (short) elbow	N4G2-Q-JOINT-10L
	Cartridge fitting ø10 long elbow	N4G2-Q-JOINT-10LL
	Plug cartridge	N4G2-Q-JOINT-PG
Supply and exhaust block port PA	Cartridge fitting ø6 straight	N4G2-QK-JOINT-6
	Cartridge fitting ø6 elbow	N4G2-QK-JOINT-6L

Dimensions

MW4GB2

● I/O connector (R1)

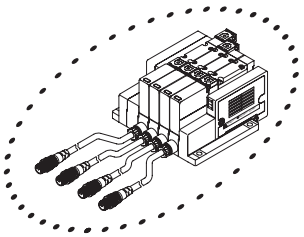

I/O connector pin layout

No.	Part name
1	End block L
2	Masking plate
3	Valve block (with I/O connector cable)
4	Solenoid valve body
5	Supply and exhaust block
6	End block R
7	DIN rail

● Push-in L fitting for valve block (upward)
For single solenoid/double solenoid manifolds only.
Port A is a long elbow and port B a short elbow.

● ø6(CL6)

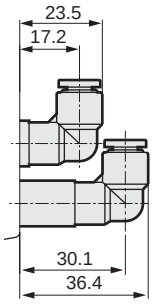

● ø8(CL8)

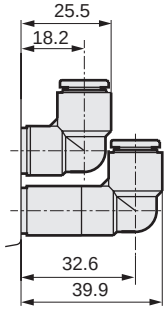

● Push-in L fitting for supply and exhaust block (upward)

● ø8(CL8)

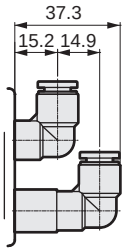

●ø10(CL10)

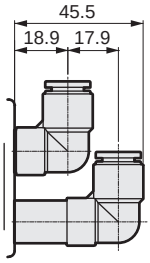

Dimensions

MW4GZ2

● I/O connector (R1)

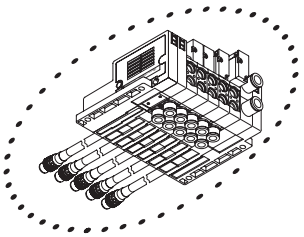

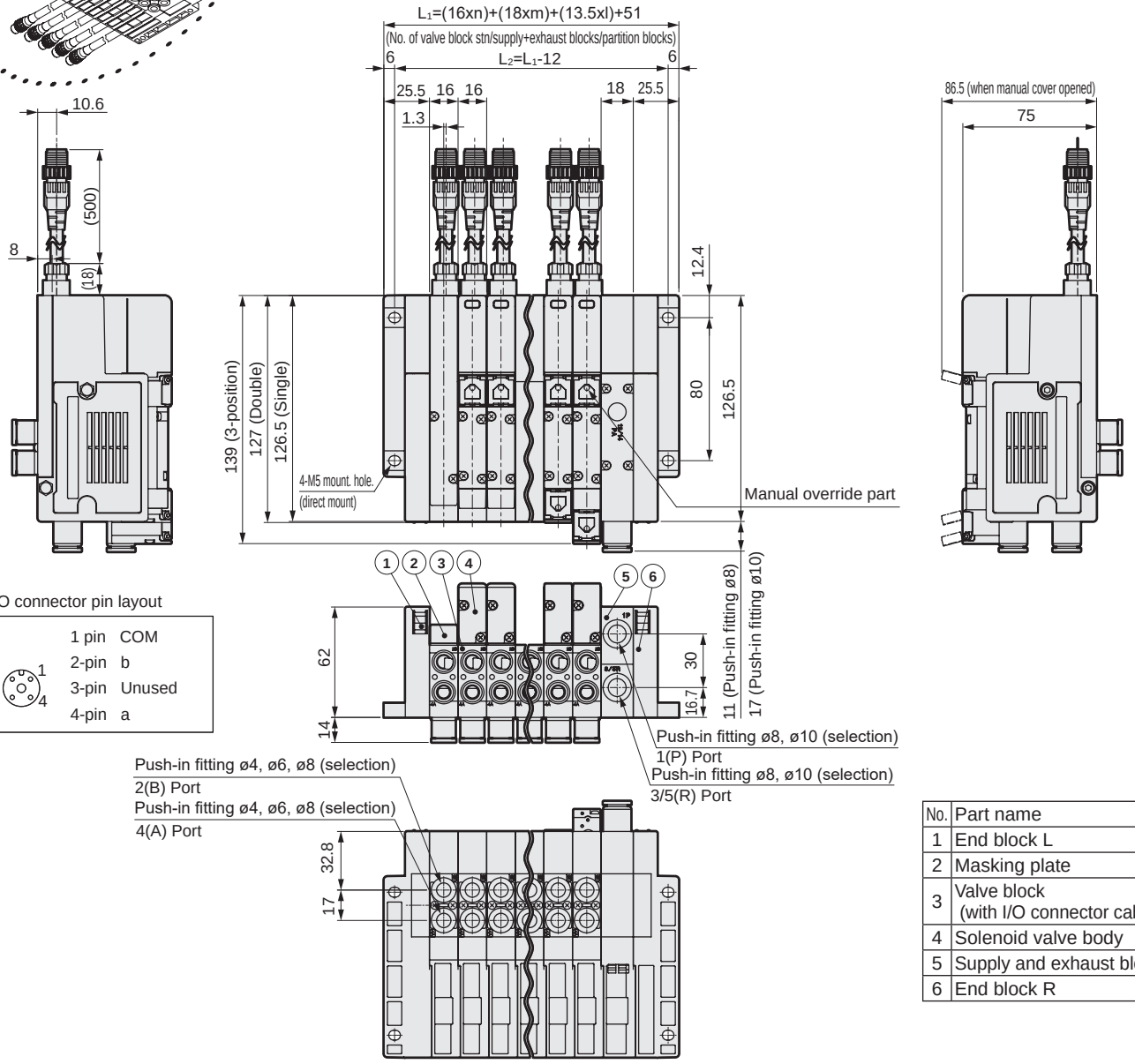

*I/O connector pin layout

1 pin	COM
2-pin	b
3-pin	Unused
4-pin	a

No.	Part name
1	End block L
2	Masking plate
3	Valve block (with I/O connector cable)
4	Solenoid valve body
5	Supply and exhaust block
6	End block R

● Push-in L fitting for supply and exhaust block (upward)

● ø8(CL8)

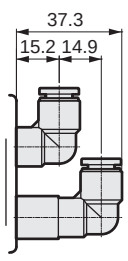

● ø10(CL10)

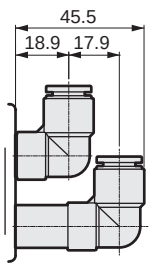

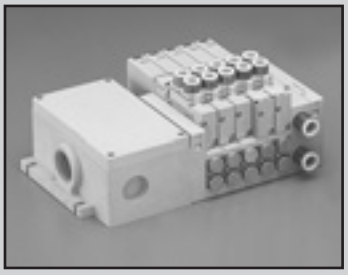

Reduced wiring manifold
Body piping

MW$^{3}_{4}$GA2-T1/2/3/5/7/8 Series

● Cylinder bore size: ø20 to ø80

CE Refer to the Ending for details. RoHS CAD

Manifold common specifications

1 MPa ≈ 145.0 psi, 1 MPa = 10 bar

Item		MW3GA2/MW4GA2
Manifold		Block manifold
Air supply and exhaust method		Common supply/common exhaust (with check valve built-in)
Pilot exhaust method	Internal pilot	Main valve/pilot valve common exhaust (pilot exhaust check valve built-in)
	External pilot	Main valve/pilot valve individual exhaust
Piping direction		Valve top direction
Valve and operation		Pilot operated soft spool valve
Working fluid		Compressed air
Max. working pressure MPa		0.7 (≈101 psi, 7 bar)
Min. working pressure MPa		0.2 (≈29 psi, 2 bar) (*4)
Proof pressure MPa		1.05 (≈152 psi, 10 bar)
Ambient temperature °C		-5 (23°F) to 55 (131°F) (no freezing)
Fluid temperature °C		5 (41°F) to 55 (131°F)
Manual override		Non-locking/locking common (standard)
Lubrication (*1)		Not required
Degree of protection (*2)		Dust-proof/jet-proof (IP65) (*3)
Vibration resistance m/s^2		49 or less
Impact resistance m/s^2		294 or less
Atmosphere		Cannot be used in corrosive gas environments

*1: Use turbine oil Class 1 ISO VG32 for lubrication.
Note that excessive lubricant may cause unstable operation.
*2: Tested according to the test method for IP65 (IEC60529 [IEC529: 1989-11]) standards.
For details, refer to page 1103.
3: The degree of protection of D-sub-connector (T30) and flat cable connector (T5) is dust-proof IP40 or equivalent. Avoid water drops or oil, etc., during use.
*4: The working pressure range is 0 to 0.7 MPa when external pilot (option code: K) is selected. Set the external pilot pressure between 0.2 and 0.7 MPa.

Electrical specifications

Item		MW3GA2/MW4GA2
Rated voltage V	DC	12, 24
	AC	100
Voltage fluctuation range		±10%
Holding current A	24 VDC	0.025
	12 VDC	0.050
	100 VAC	0.012
Power consumption W(*5)	24 VDC	0.6
	12 VDC	0.6
Apparent power VA (*6)	100 VAC	1.2
Thermal class		B

*5: Surge suppressor and indicator are equipped as standard.
*6: Multi-connector, D-sub-connector and flat cable connector are not available with 100 VAC.
Serial transmission specifications have no 100 VAC or 12 VDC settings.

JIS symbol

● 3-port valve
2-position single NC

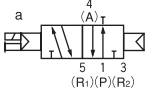

2-position single NO

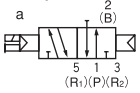

● Two 3-port valves integrated
(A side valve: NC, B side valve: NC)

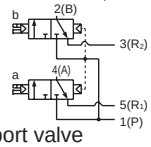

● 5-port valve
2-position single

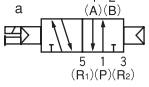

2-position double

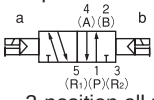

3-position all ports closed

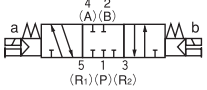

3-position A/B/R connection

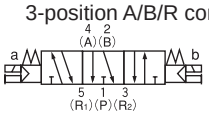

3-position P/A/B connection

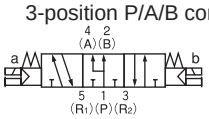

Individual specifications

Item		MW3GA2/MW4GA2													
		T10	T20	T30	T51	T53	T7EC□1	T7EC□2	T7EC□7	T7EN□1	T7EN□2	T7EN□7	T7EB□1	T7EB□2	T7EB□7
Max. station No.	Standard wiring	18	-	18	18	18	16	18	16	16	18	16	16	18	16
	Double wiring	9	8	12	9	12	8	16	8	8	16	8	8	16	8
Max. number of solenoids		18	16	24	18	24	16	32	16	16	32	16	16	32	16
Port size	Port A/B	Push-in fitting ø4, ø6, ø8, Rc1/8													
	Port P/R	Push-in fitting ø8, ø10													

Item		MW3GA2/MW4GA2					
		T7EP□1	T7EP□2	T7EP□7	T8G1 T8D1	T8G2 T8D2	T8G7 T8D7
Max. station No.	Standard wiring	16	18	16	16	18	16
	Double wiring	8	16	8	8	16	8
Max. number of solenoids		16	32	16	16	32	16
Port size	Port A/B	Push-in fitting ø4, ø6, ø8, Rc1/8					
	Port P/R	Push-in fitting ø8, ø10					

Refer to page 996 for weight.

Performance/characteristics by model

Item			MW3GA2/MW4GA2	
			ON	OFF
Response time ms	Two 3-port valves integrated		12	29
	2-position	Single	22	24
		Double	26	-
	3-position		25	35

The response times are values with supply pressure of 0.5 MPa at 20°C and without lubrication. They depend on the pressure and the lubricant quality.

Flow characteristics

Model No.	Solenoid position		P→A/B		A/B→R	
			C[dm^3/(s·bar)]	b	C[dm^3/(s·bar)]	b
MW3GA2	Two 3-port valves integrated		1.7	0.37	2.2	0.13
MW3GA2	2-position		2.2	0.35	1.7	0.25
MW3GA2 MW4GA2	3-position	All ports closed	2.0	0.36	2.2	0.21
		ABR connection	2.1	0.34	1.7	0.26
		PAB connection	2.3	0.35	2.3	0.27

*1: Effective cross-sectional area S and sonic conductance C are converted as S ≈ 5.0 x C.
*2: Values of the 2-position type and ABR connection type are those with integrated check valve.

Reduced wiring specifications

Item	T10	T20	T30	T51	T53
Type	Common terminal block M3 thread	Multi-connector	D-sub-connector	20P Flat cable connector Without power supply terminal	26P Flat cable connector Without power supply terminal
Connector	-	HIROSE ELECTRIC CO. LTD. RM21WTP-20S 20-pin	D-sub-connector (female) 25-pin	MIL-C-83503 standard compliant pressure welding socket 20-pin	MIL-C-83503 standard compliant pressure welding socket 26-pin

Specifications of serial transmission device (adapter) stations (refer to page 1086 for PLC compatibility table)

The communication setting file can be downloaded from the CKD website (https://www.ckd.co.jp/en/).

Item		Device unit dedicated for valves (without I/O block)				Device unit with I/O block	
		T7EC1	T7EC2	T7ECP1	T7ECP2	T7ECB7	T7ECPB7
Network name		EtherCAT				EtherCAT	
Power supply voltage	Unit side	24 VDC ±10%				24 VDC ±10%	
	Valve side	24 VDC +10%, -5%				24 VDC +10%, -5%	
Current consumption	Unit side	110 mA or less				110 mA or less (excluding input block current)	
	Valve side	15 mA or less (excluding load current)				15 mA or less (excluding load current)	
Valve output		NPN		PNP		NPN	PNP
Input/output point count		0/16	0/32	0/16	0/32	16/16	
Operation display		Power supply/communication status/valve power supply					
Degree of protection		IP65					

Item		Device unit dedicated for valves (without I/O block)				Device unit with I/O block	
		T7EN1	T7EN2 *1	T7ENP1	T7ENP2 *1	T7ENB7	T7ENPB7
Network name		EtherNet/IP					
Power supply voltage	Unit side	24 VDC ±10%					
	Valve side	24 VDC +10%, -5%					
Current consumption	Unit side	130 mA or less				130 mA or less (*2: excluding input block current)	
	Valve side	15 mA or less (excluding load current)					
Valve output		NPN output		PNP output		NPN output	PNP output
I/O points		16-point output	32-point output	16-point output	32-point output	16-point input/16-point output	16-point input/16-point output
LED display	Power supply	2 points: Unit power supply/valve power supply					
	Communication	4 points: MS, NS, L/A IN, L/A OUT					
Degree of protection		IP65					

*1: No 32-point output when connecting with W4G4 valve. *2: If the power supply of the I/O block also serves as the unit power supply, refer to page 991.

Item		Device unit dedicated for valves (without I/O block)				Device unit with I/O block	
		T7EB1	T7EB2 *1	T7EBP1	T7EBP2 *1	T7EBB7	T7EBPB7
Network name		CC-Link IEF Basic					
Power supply voltage	Unit side	24 VDC ±10%					
	Valve side	24 VDC +10%, -5%					
Current consumption	Unit side	130 mA or less				130 mA or less (*2: excluding input block current)	
	Valve side	15 mA or less (excluding load current)					
Valve output		NPN output		PNP output		NPN output	PNP output
I/O points		16-point output	32-point output	16-point output	32-point output	16-point input/16-point output	16-point input/16-point output
LED display	Power supply	2 positions: PW, PW (V)					
	Communication	4 positions: RUN, ERR, L/A IN, L/A OUT, INFO					
Degree of protection		IP65					

*1: No 32-point output when connecting with W4G4 valve. *2: If the power supply of the I/O block also serves as the unit power supply, refer to page 991.

Item		Device unit dedicated for valves (without I/O block)				Device unit with I/O block	
		T7EP1	T7EP2 *1	T7EPP1	T7EPP2 *1	T7EPB7	T7EPPB7
Network name		PROFINET					
Power supply voltage	Unit side	24 VDC ±10%					
	Valve side	24 VDC +10%, -5%					
Current consumption	Unit side	130 mA or less				130 mA or less (*2: excluding input block current)	
	Valve side	15 mA or less (excluding load current)					
Valve output		NPN output		PNP output		NPN output	PNP output
I/O points		16-point output	32-point output	16-point output	32-point output	16-point input/16-point output	16-point input/16-point output
LED display	Power supply	2 positions: PW, PW (V)					
	Communication	4 positions: RUN, ERR, L/A IN, L/A OUT, INFO					
Degree of protection		IP65					

*1: No 32-point output when connecting with W4G4 valve. *2: If the power supply of the I/O block also serves as the unit power supply, refer to page 991.

Specifications of serial transmission device units (Refer to page 1086 for the PLC compatibility table)

Download the communication setting file from the CKD website (https://www.ckd.co.jp/en/).

Item \ Network name / Device unit model No.		CC-Link (Ver. 1.10)			DeviceNet *1		
		T8G1	T8G2	T8G7	T8D1	T8D2	T8D7
Communication speed		156K/625K/2.5M/5M/10Mbps			125K/250K/500Kbps		
Power supply voltage	Unit side	24 VDC ±10%			24 VDC ±10%		
	Valve side	24 VDC+10% , -5%			24 VDC+10%, -5%		
	Communication side	—			11 to 25 VDC		
Current consumption	Unit side	60 mA or less	100 mA or less	75 mA or less (*2)	70 mA or less	90 mA or less	80 mA or less (*2)
	Valve side	15 mA or less (when all points are OFF)			15 mA or less (when all points are OFF)		
	Communication side	—			50 mA or less		
Valve output		NPN			NPN		
Input/output point count		0/16	0/32	16/16	0/16	0/32	16/16
Occupied number		1 station			2 bytes	4 bytes	4 bytes
Operation display		Power supply/communication status/valve power supply			Communication status/valve power supply		
Other		—			—		

*1: Compatible with DeviceNet compliant networks (DLNK, etc.) as well.

*2: If the feed power supply of the input blocks also serves as the unit power supply, use the formula below for calculation.

(unit current consumption) = * + (35 mA x number of input blocks) + (total internal current consumption of connected sensors)

* ...T8G7:60mA, T8D7:80mA

Note that for T8G7 and T8D7 unit side current consumption, select the sensor so that the current consumption is 600mA or less.

I/O block specifications

● Input block

Model No. / Item	NW4GA2-IN-N-K	NW4GA2-IN-N-B	NW4GA2-IN-P-K	NW4GA2-IN-P-B
Number of inputs	4 points			
Rated input voltage	24 VDC			
Rated input current	7 mA			
ON voltage	15 VDC or more (between input terminals and V)		15 VDC or more (between input terminals and G)	
OFF voltage/OFF current	5 VDC or less (between input terminal and V)/1.5 mA or less		5 VDC or less (between input terminal and G)/1.5 mA or less	
Input	Sink		Source	
Supply power	Common with unit power supply	Externally supplied power	Common with unit power supply	Externally supplied power
Operation display	Power supply/input status			

*1: Refer to page 1056 for model No.

● Output block

Model No. / Item	NW4GA2-ONT-N-B	NW4GA2-OUT-P-B
Output points	4 points	
Rated voltage	24 VDC	
Max. load current	1 A/1 point (3 A/common)	
Residual voltage	1.5 V or less	
Output	Sink	Source
Protection circuit	Overcurrent protection/reverse connection protection	
Fuse	Power supply for external load: 24 VDC and 5 A (can be replaced)	
Operation display	Power supply/output status	

*1: Refer to page 1056 for model No.

How to order

Common terminal block/multi-connector/D-sub-connector/flat cable connector

● Manifold model No.

MW4GA2 **1** **0** - **C8** — **T10** **W** **H** **D** - **5** - **3**

● 3-port manifold model No.

MW3GA2 **66** **0** - **C8** — **T10** **W** **H** **D** - **5** - **3**

● Discrete valve block with solenoid valve

NW4GA2 **1** **0** - **C8** - ○ **W** **H** — **3**

● Discrete valve block with 3-port solenoid valve

NW3GA2 **66** **0** - **C8** - ○ **W** **H** — **3**

● Discrete valve for integrated base

W4GA2 **1** **9** - **C8** — **H** — **3**

● 3-port discrete valve for integrated base

W3GA2 **66** **9** - **C8** — **H** — **3**

Ⓐ Model No.

Ⓑ Solenoid position

Ⓒ Port size (*1)

· For the cable with D-sub-connector model No., refer to page 1064.
· For the cable for flat cable connector model No., refer to page 1079.

Ⓓ Electrical connections (*2)

Ⓔ Reduced wiring connection
For circuit diagrams (inside the solenoid valve), refer to page 970.

Ⓕ Terminal/connector pin Array method

Ⓖ Option (*3)

Ⓗ Mount type

Ⓘ Station No.

Ⓙ Voltage

Code	Description	Ⓐ Model No.					
		Manifold		Discrete valve block with solenoid valve		Discrete valve	
		3-port valve	5-port valve	3-port valve	5-port valve	3-port valve	5-port valve
		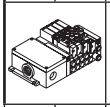					
		MW3GA2	MW4GA2	NW3GA2	NW4GA2	W3GA2	W4GA2
Ⓑ Solenoid position							
1	2 position single		●		●		●
2	2-position double		●		●		●
3	3-position all ports closed		●		●		●
4	3-position ABR connection		●		●		●
5	3-position PAB connection		●		●		●
1	2-position single normally closed	●		●		●	
11	2-position single normally open	●		●		●	
66	Two 3-port valves integrated (*8) — A side valve: Normally closed / B side valve: Normally closed	●		●		●	
8	Mix manifold (when there are multiple solenoid positions)	●	●				
Ⓒ Port size (port A/B)							
C4	ø4 push-in fitting	●	●	●	●	●	●
C6	ø6 push-in fitting	●	●	●	●	●	●
C8	ø8 push-in fitting	●	●	●	●	●	●
CX	Push-in fitting mix	●	●				
06	Rc1/8	●	●	●	●	●	●
Ⓓ Electrical connections							
Blank	DC connector relay board specifications			●	●		
2 to 8	*Select the AC cable length on page 1051.			●	●		
Ⓔ Reduced wiring (lamp and surge suppressor provided as standard)							
Refer to the next page for reduced wiring.							
Ⓕ Terminal/connector pin array							
Blank	Standard wiring (*4)	●	●	●	●		
W	Double wiring (*4)	●	●	●	●		
Ⓖ Option							
Blank	No option	●	●	●	●	●	●
M	Manual override of non-locking (*5)	●	●	●	●	●	●
M7	Manual device with OFF function(*5)	●	●	●	●	●	●
H	With check valve (*6)	●	●	●	●	●	●
K	External pilot	●	●				
A	Ozone/coolant proof product	●	●	●	●	●	●
F	Port A/B filter built in (*7)	●	●	●	●	●	●
Z1	Air supply spacer (*3)	●	●				
Z3	Exhaust spacer (*3)	●	●				
Z8	Individual air supply compatible spacer with in-stop valve spacer (*3)(*8)	●	●				
Ⓗ Mount type							
Blank	Direct mount	●	●				
D	DIN rail mount	●	●				
Ⓘ Station No.							
2 to 18	2 stations to 18 stations (Differs depending on the reduced wiring specifications. Refer to the individual specifications (on page 988).)	●	●				
Ⓙ Voltage							
1	100 VAC (rectifier integrated)	●	●	●	●	●	●
3	24 VDC	●	●	●	●	●	●
4	12 VDC	●	●	●	●	●	●

indicates not available.

⚠ Precautions for model selection

Be sure to fill in the "Manifold specifications sheet".

*1: Specify the size of port P/R in the supply and exhaust block section.
*2: AC: If a change of specifications is expected, select a valve block with masking plate as a spare block.
***3: Specify the spacer mounting position and quantity on the manifold specifications sheet. Stacking of spacers is not possible. Combination with the masking plate is not supported. Refer to page 1057 for details.**
*4: Blank.....The wiring will be based on the type of valve mounted.
W.....All wired as double solenoid regardless of the type of valve used. It is not necessary to select W if no single solenoid is used.
Double wiring will automatically be applied to multi-connector T20 and AC voltage type even if W is not specified, since they are only for double wiring.
*5: Manual override of non-locking (M) and manual override with OFF function (M7) cannot be selected together.
***6: Check valve (H) is not available for 3-position all ports closed and 3-position PAB connection. For the check valve, refer to page 1105 .**
*7: A filter is built into port P.
*8: Not compatible with combination with external pilot (K).

[Reduced wiring list]

Ⓐ Model No.							
Manifold		Discrete valve block with solenoid valve		Discrete solenoid valve			
3-port valve	5-port valve	3-port valve	5-port valve	3-port valve	5-port valve		
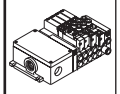		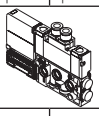					
MW3GA2	MW4GA2	NW3GA2	NW4GA2	W3GA2	W4GA2		
Ⓔ Reduced wiring (lamp and surge suppressor provided as standard)							
T10	Common terminal block (M3 screw) Left-sided spec.	●	●				
T20	Multi-connector Left-sided spec. (*9)	●	●				
T30	D-sub-connector Left-sided spec. (*9)	●	●				
T51	20-pin flat cable connector (without power supply terminal) Left-sided spec. (*9)	●	●				
T53	26-pin flat cable connector (without power supply terminal) Left-sided spec. (*9)	●	●				

(*9):Multi-connector (T20), D-sub-connector (T30) and flat cable connector (T5*) connection specifications do not have 100 VAC settings.

Ozone-proof specifications • Coolant proof specifications

Select “A” of Item Ⓖ Option in How to order on pages 992 and 994.

Specifications for rechargeable battery (Catalog No. CC-1226A)

For use in the rechargeable battery manufacturing process, materials used for all parts are limited

** - Voltage - **P40**

CE marking specifications

** - Voltage - **ST**

• Standard voltage of 24 VDC or less is CE marking-compatible even if the model No. is not indicated with "ST".

MW$^{3}_{4}$GA2-T7/T8 Series

Reduced wiring manifold; body piping

How to order

Serial transmission

● Manifold model No.

MW4GA2 1 0 - C8 — T8G1 W H D - 5 - 3

● 3-port manifold model No.

MW3GA2 66 0 - C8 — T8G1 W H D - 5 - 3

● Discrete valve block with solenoid valve

NW4GA2 1 0 - C8 - ○ W H — 3

● Discrete valve block with 3-port solenoid valve

NW3GA2 66 0 - C8 - ○ W H — 3

● Single valve for mounting base

W4GA2 1 9 - C8 — H — 3

● 3-port discrete valve for mounting base

W3GA2 66 9 - C8 — H — 3

Ⓐ Model No.
Ⓑ Solenoid position
Ⓒ Port size (*1)
Ⓓ Electrical connections
Ⓔ Reduced wiring connection
For circuit diagrams (inside the solenoid valve), refer to page 970.
Ⓕ Terminal/connector pin array
Ⓖ Option (*2)
Ⓗ Mount type
Ⓘ Station No.
Ⓙ Voltage

Code	Description	MW3GA2	MW4GA2	NW3GA2	NW4GA2	W3GA2	W4GA2
	Ⓐ Model No. Manifold: 3-port valve / 5-port valve; Discrete valve block with solenoid valve: 3-port valve / 5-port valve; Discrete valve: 3-port valve / 5-port valve						
	Ⓑ Solenoid position						
1	2 position single		●		●		●
2	2-position double		●		●		●
3	3-position all ports closed		●		●		●
4	3-position ABR connection		●		●		●
5	3-position PAB connection		●		●		●
1	2-position single normally closed	●		●		●	
11	2-position single normally open	●		●		●	
66	Two 3-port valves integrated (*8) — A side valve: Normally closed; B side valve: Normally closed	●		●		●	
8	Mix manifold (when there are multiple solenoid positions)	●	●				
	Ⓒ Port size (port A/B)						
C4	ø4 push-in fitting	●	●	●	●	●	●
C6	ø6 push-in fitting	●	●	●	●	●	●
C8	ø8 push-in fitting	●	●	●	●	●	●
CX	Push-in fitting mix	●	●				
06	Rc1/8	●	●	●	●	●	●
	Ⓓ Electrical connections						
Blank	DC connector relay board specifications			●	●		
	Ⓔ Reduced wiring (lamp and surge suppressor provided as standard)						
	Refer to the next page for reduced wiring.						
	Ⓕ Terminal/connector pin array						
Blank	Standard wiring (*3)	●	●	●	●		
W	Double wiring (*3)	●	●	●	●		
	Ⓖ Option						
Blank	No option	●	●	●	●	●	●
M	Manual override of non-locking (*4)	●	●	●	●	●	●
M7	Manual device with OFF function (*4)	●	●	●	●	●	●
H	With check valve (*5)	●	●	●	●	●	●
K	External pilot	●	●				
A	Ozone/coolant proof product	●	●	●	●	●	●
F	Port A/B filter built in (*6)	●	●	●	●	●	●
Y**	I/O block (*7) (In **, enter the number of the desired I/O block combination from Table 1 [I/O block combination table].)	●	●				
Z1	Air supply spacer (*2)	●	●				
Z3	Exhaust spacer (*2)	●	●				
Z8	Individual air supply compatible spacer with in-stop valve spacer (*2)(*8)	●	●				
	Ⓗ Mount type						
Blank	Direct mount	●	●				
D	DIN rail mount	●	●				
	Ⓘ Station No.						
2 to 16	2 stations to 16 stations (Differs depending on the reduced wiring specifications. Individual specifications (Page 988).)	●	●				
	Ⓙ Voltage						
3	24 VDC (*9)	●	●	●	●	●	●

indicates not available.

⚠ Precautions for model selection

Be sure to fill in the "Manifold specifications sheet".

*1: Specify the port P/R bore size in the supply and exhaust block section.

***2: Specify the spacer mounting position and quantity in manifold specifications sheet. Stacking of spacers is not possible. Combination with the masking plate is not supported. For details, refer to page 1057.**

*3: Blank……The wiring will be based on the type of valve mounted.
W……All wired as double solenoid regardless of the type of valve mounted
The wiring will be for solenoid.
If a single solenoid is not installed,
W is not required.

*4: Non-locking manual override (M) and manual override with OFF function (M7) simultaneous selection is not supported.

***5: Check valve (H) is not available for 3-position all ports closed and PAB connection. Refer to page 1105 for details on the exhaust check valve.**

*6: A filter is built into port P.

***7: Specify the I/O type (sink/source) of I/O block and the power supply (shared with device unit/external) in the manifold specifications sheet (Page 1099).**

*8: Not compatible with combination with external pilot (K).

*9: Serial transmission is not available with 100 VAC and 12 VDC.

[Reduced wiring list]

Ⓐ Model No.									
Manifold			Discrete valve block with solenoid valve			Discrete solenoid valve			
3-port valve	5-port valve		3-port valve	5-port valve		3-port valve	5-port valve		
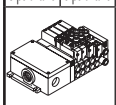			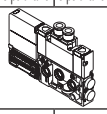						
MW3GA2	MW4GA2		NW3GA2	NW4GA2		W3GA2	W4GA2		
Ⓔ Reduced wiring (lamp and surge suppressor provided as standard)									
T7EC1	Thin EtherCAT	16 point output(NPN valve output)	●	●					
T7ECP1		16 point output(PNP valve output)	●	●					
T7EC2		32 point output(NPN valve output)	●	●					
T7ECP2		32 point output(PNP valve output)	●	●					
T7ECB7		16/16-point I/O (NPN valve output)	●	●					
T7ECPB7		16/16-point I/O (PNP valve output)	●	●					
T7EN1	Thin EtherNet/IP	16-point output (NPN valve output)	●	●					
T7ENP1		16-point output (PNP valve output)	●	●					
T7EN2		32-point output (NPN valve output)	●	●					
T7ENP2		32-point output (PNP valve output)	●	●					
T7ENB7		16/16-point I/O (NPN valve output)	●	●					
T7ENPB7		16/16-point I/O (PNP valve output)	●	●					
T7EB1	Thin CC-Link IEF Basic	16-point output (NPN valve output)	●	●					
T7EBP1		16-point output (PNP valve output)	●	●					
T7EB2		32-point output (NPN valve output)	●	●					
T7EBP2		32-point output (PNP valve output)	●	●					
T7EBB7		16/16-point I/O (NPN valve output)	●	●					
T7EBPB7		16/16-point I/O (PNP valve output)	●	●					
T7EP1	Thin PROFINET	16-point output (NPN valve output)	●	●					
T7EPP1		16-point output (PNP valve output)	●	●					
T7EP2		32-point output (NPN valve output)	●	●					
T7EPP2		32-point output (PNP valve output)	●	●					
T7EPB7		16/16-point I/O (NPN valve output)	●	●					
T7EPPB7		16/16-point I/O (PNP valve output)	●	●					
T8G1	CC-Link	16 point output	●	●					
T8G2		32 point output	●	●					
T8G7		16 point input/16 point output	●	●					
T8D1	DeviceNet	16 point output	●	●					
T8D2		32 point output	●	●					
T8D7		16 point input/16 point output	●	●					

Table 1 [I/O block combination table]

T7

Code	Layout of I/O blocks and station No.						Wiring block side
Y10						IN	
Y20					IN	IN	
Y30				IN	IN	IN	
Y40			IN	IN	IN	IN	
Y11					OUT	IN	
Y21				OUT	IN	IN	
Y31			OUT	IN	IN	IN	
Y41		OUT	IN	IN	IN	IN	
Y12				OUT	OUT	IN	
Y22			OUT	OUT	IN	IN	
Y32		OUT	OUT	IN	IN	IN	
Y42	OUT	OUT	IN	IN	IN	IN	

*1: How to read the table
Example) Y11 is a combination of one input block (4 points) and one output block (4 points).
2: Refer to "I/O point numbers corresponding to wiring method T8 I/O No." on page 1080 for details.

T8

Code	Layout of I/O blocks and station No.						Wiring block side
Y10						IN	
Y20					IN	IN	
Y30				IN	IN	IN	
Y40			IN	IN	IN	IN	
Y01						OUT	
Y02					OUT	OUT	
Y03				OUT	OUT	OUT	
Y04			OUT	OUT	OUT	OUT	
Y11					OUT	IN	
Y21				OUT	IN	IN	
Y31			OUT	IN	IN	IN	
Y41		OUT	IN	IN	IN	IN	
Y12				OUT	OUT	IN	
Y22			OUT	OUT	IN	IN	
Y32		OUT	OUT	IN	IN	IN	
Y42	OUT	OUT	IN	IN	IN	IN	

Ozone-proof specifications • Coolant proof specifications

Select option "A" of Item Ⓖ in How to order on pages 992 and 994.

Specifications for rechargeable battery (Catalog No. CC-1226A)

● For use in the rechargeable battery manufacturing process, materials used for all parts are limited

** - Voltage - **P40**

(compatible only with T8*)

CE marking specifications

** - Voltage - **ST**

- Standard voltage of DC24V or less is CE marking-compatible even if the model No. is not indicated with "ST".
- CE Marking is not available for T8G1, T8G2, and T8G7.

Manifold components explanation and parts list

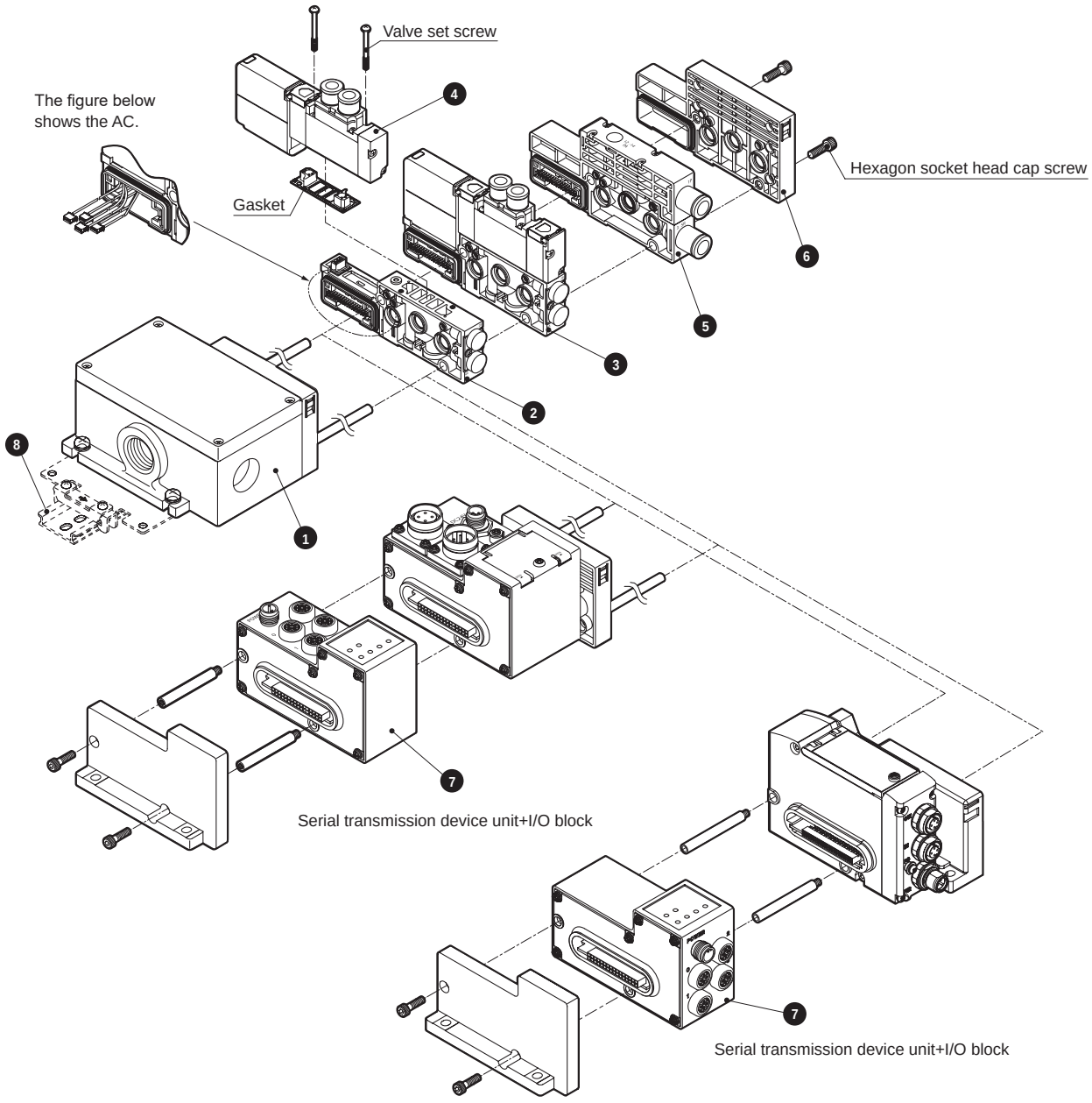

List of main components (refer to pages 1048 to 1063 for details)

No.	Component name	Model No. (example)	No.	Component name	Model No. (example)
1	Wiring block	NW4G2-T10	5	Supply and exhaust block	NW4G2-Q-10
2	Discrete valve block	NW4GA2-V1	6	End block R	NW4G2-ER
3	Discrete valve block with solenoid valve	NW4GA220-C8-H-3	7	I/O block	NW4GA2-IN-N-B
4	Discrete solenoid valve for manifold	W4GA219-C8-H-3	8	DIN rail	N4G-BAA (Length)

Weight (for DC)

NW4GA2

(g)

Block		Weight	Block		Weight
Valve block with solenoid valve	NW3GA210-*-*-*	181	Valve block with masking plate	NW4GA2-MP$^{S}_{D}$	102
	NW3GA2110-*-*-*	181	Wiring block (serial transmission device unit)	NW4GA2-T8*	430
	NW4GA210-*-*-*	186	I/O block (serial transmission device unit)	NW4GA2-IN/OUT-N/P-K/B	220
	NW4GA220-*-*-*	202	Wiring block (serial transmission device unit)	NW4G2-T7*	410
	NW4GA2$^{3}_{5}$0-*-*-*	209	I/O block (serial transmission device unit)	NW4GB2-IN/OUT-N/P-K/B*	220
Valve block	NW4GA2-V*	72			

* When NW4GA2-T8* is selected for wiring block, I/O block is upward connection (NW4GA2-).
When NW4G2-T7* is selected for wiring block, I/O block is lateral connection (NW4GB2-).

COMMON

(g)

Block		Weight
Supply and exhaust block	NW4G2-Q-*	137
	NW4G2-QK-*	140
	NW4G2-QZ-*	137
	NW4G2-QKZ-*	143
End block	NW4G2-ER	91
	NW4G2-EXR	96

Block		Weight
Wiring block	NW4G2-T10	423
	NW4G2-T20	490
	NW4G2-T30	370
	NW4G2-T5*	367
Air supply spacer	W4G2-P(K)-*	60
Exhaust spacer	W4G2-R-*-*	60
Spacer pilot check valve	W4G2-PC-M	183
Individual air supply compatible spacer with in-stop valve spacer	W4G2-PIS-*	115
DIN rail	N4G-BAA*	0.19/mm

Parts list

● Cartridge push-in fitting

Applicable	Part name	Model No.
Valve	Cartridge fitting ø4 straight	4G2-JOINT-C4
	Cartridge fitting ø6 straight	4G2-JOINT-C6
	Cartridge fitting ø8 straight	4G2-JOINT-C8
	Plug cartridge	4G2-JOINT-CPG
Supply and exhaust block P, R port	Cartridge fitting ø8 straight	N4G2-Q-JOINT-8
	Cartridge fitting ø10 straight	N4G2-Q-JOINT-10
	Cartridge fitting ø8 (short) elbow	N4G2-Q-JOINT-8L
	Cartridge fitting ø8 long elbow	N4G2-Q-JOINT-8LL
	Cartridge fitting ø10 (short) elbow	N4G2-Q-JOINT-10L
	Cartridge fitting ø10 long elbow	N4G2-Q-JOINT-10LL
	Plug cartridge	N4G2-Q-JOINT-PG
Supply and exhaust block port P/A	Cartridge fitting ø6 straight	N4G-QK-JOINT-6
	Cartridge fitting ø6 elbow	N4G-QK-JOINT-6L

Parts kit for T10 wiring block

● Cable clamp

Model No.	Applicable cable O.D.	Description
W4G-SCL-18A	ø14.5 to 16.5	Used to protect cables from dust and jetting water.
W4G-SCL-18B	ø16.5 to 18.5	

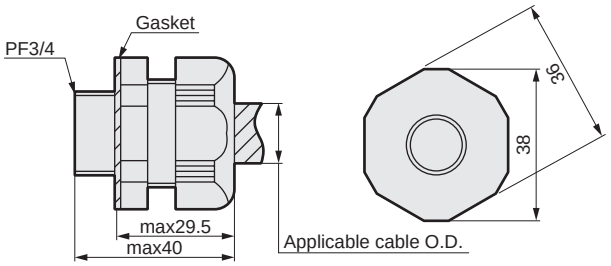

(Reference value)
Body tightening torque 4.0 to 4.5 N·m
Cable clamp tightening torque 3.0 to 3.5 N·m

Parts for I/O block

● Waterproof cap

Model No.	Description
W4G-XSZ-11	Provides jet-proof protection of the power supply connector when the power supply is shared with the serial transmission device unit.



(reference value)
Tightening torque 0.4 to 0.5 N·m

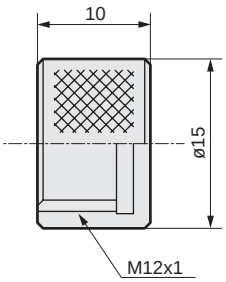

● Waterproof plug

Model No.	Description
W4G-XSZ-12	Provides jet-proof protection of unused signal connectors.



(reference value)
Tightening torque 0.4 to 0.5 N·m

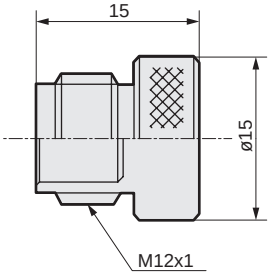

Dimensions CAD

MW4GA2

● Common terminal block (T10)

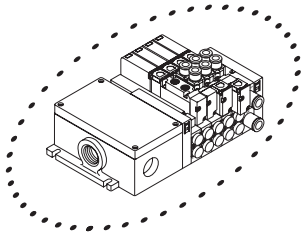

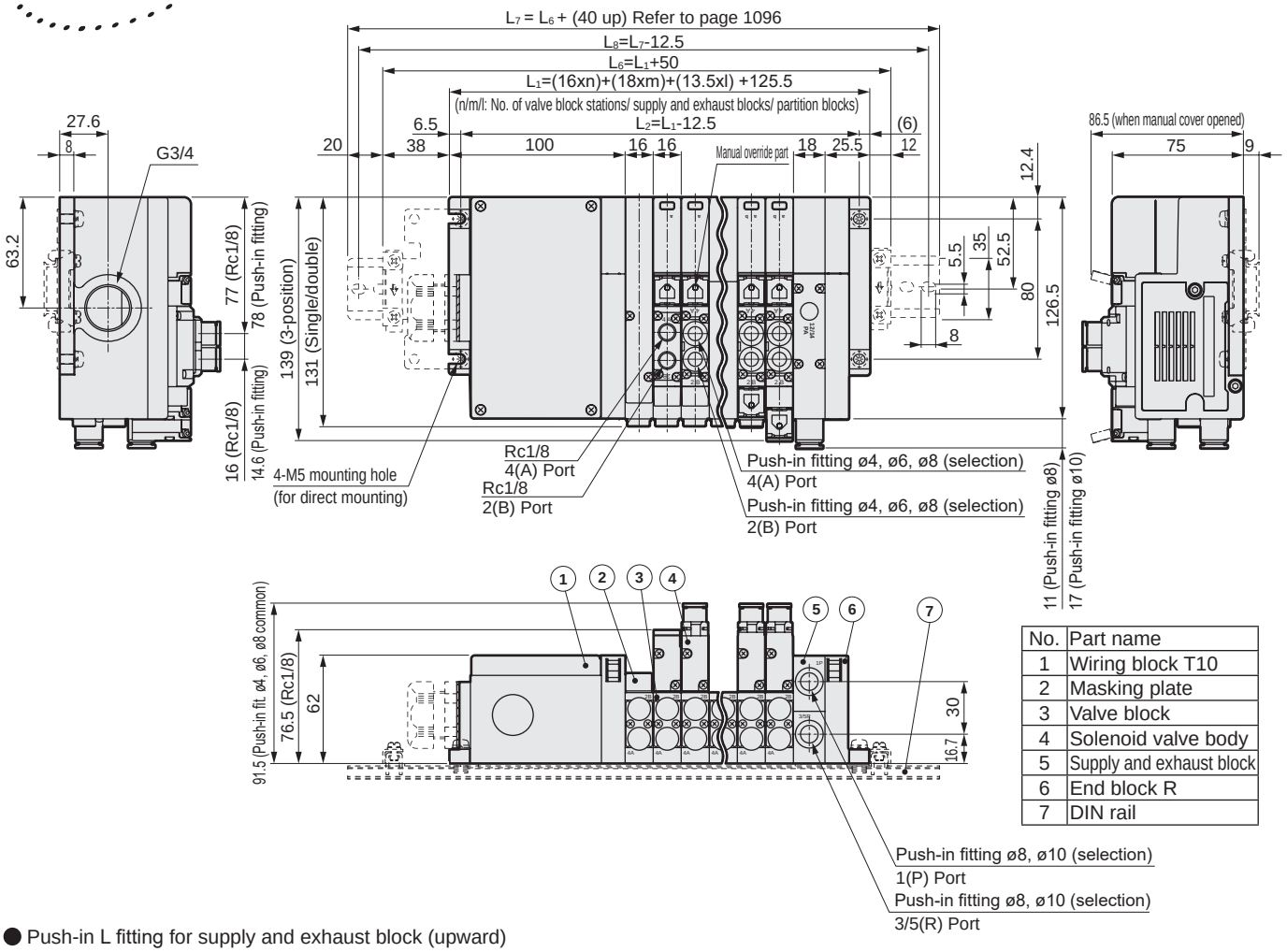

No.	Part name
1	Wiring block T10
2	Masking plate
3	Valve block
4	Solenoid valve body
5	Supply and exhaust block
6	End block R
7	DIN rail

● Push-in L fitting for supply and exhaust block (upward)

● ø8(CL8)

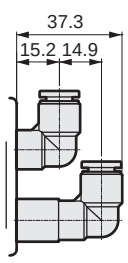

● ø10(CL10)

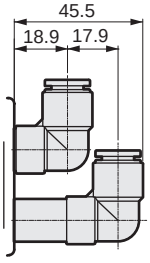

Dimensions CAD

MW4GA2

● Multi-connector (T20)

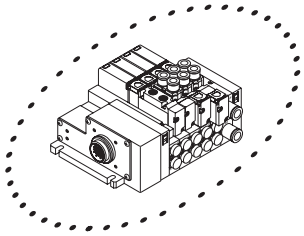

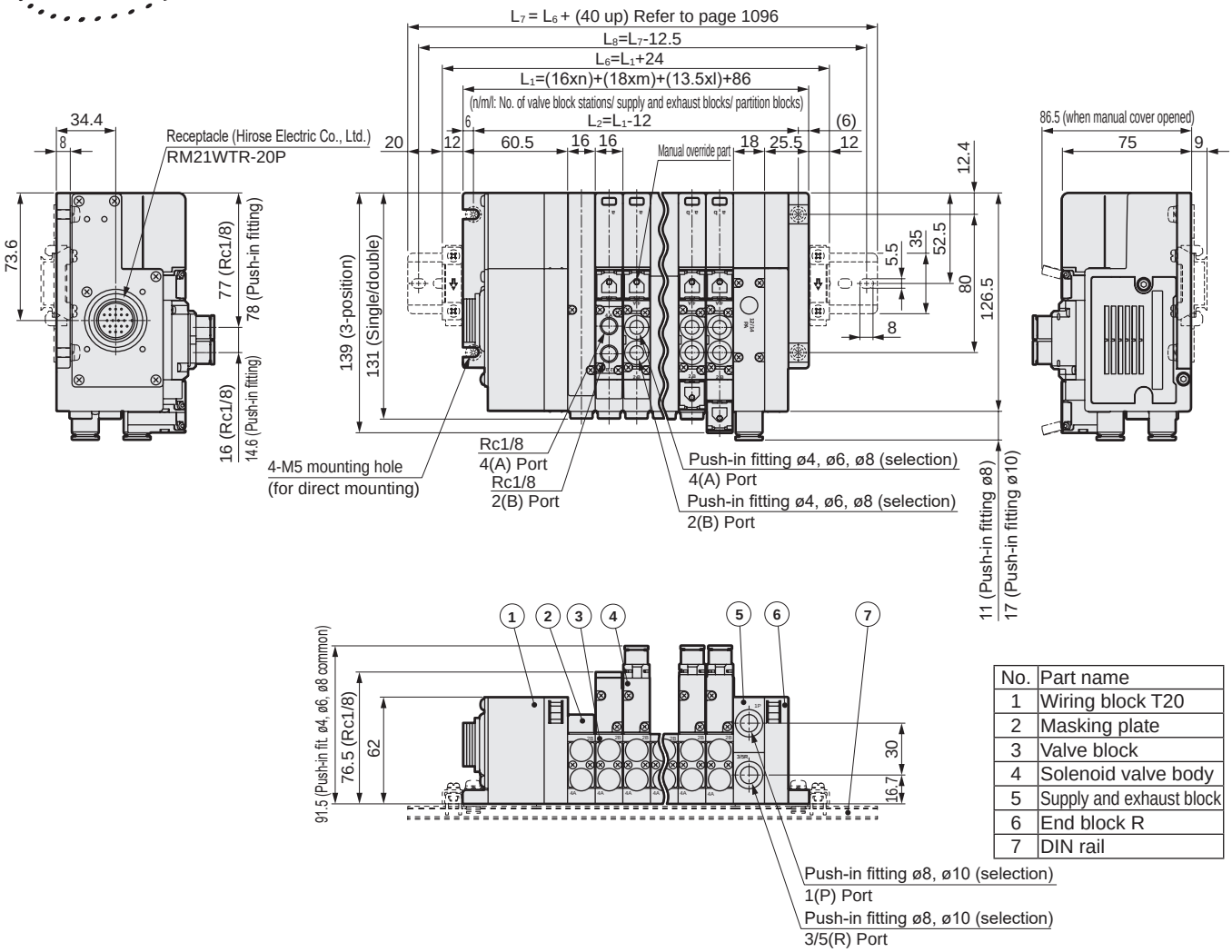

No.	Part name
1	Wiring block T20
2	Masking plate
3	Valve block
4	Solenoid valve body
5	Supply and exhaust block
6	End block R
7	DIN rail

● Push-in L fitting for supply and exhaust block (upward)

● ø8(CL8)

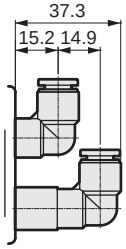

● ø10(CL10)

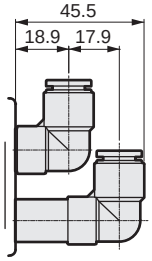

Dimensions CAD

MW4GA2

● D sub-connector (T30)

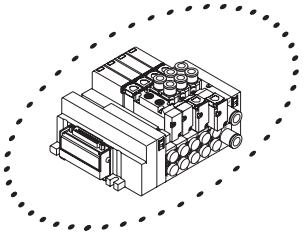

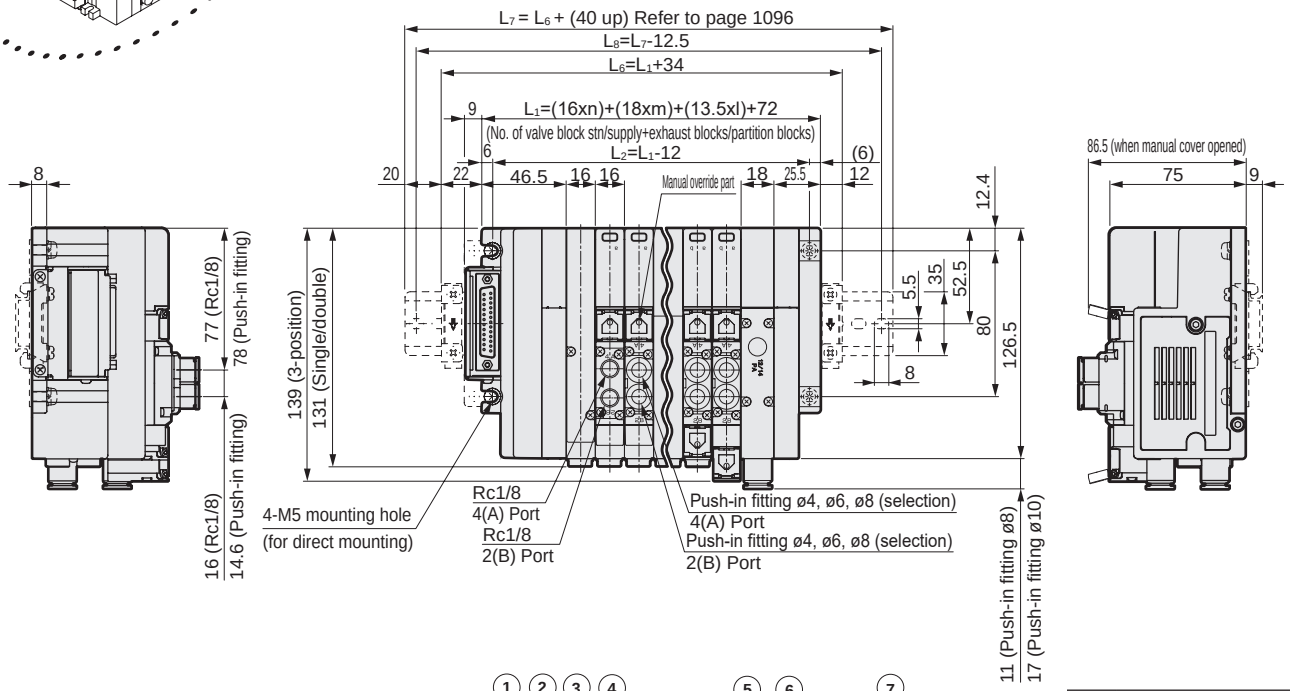

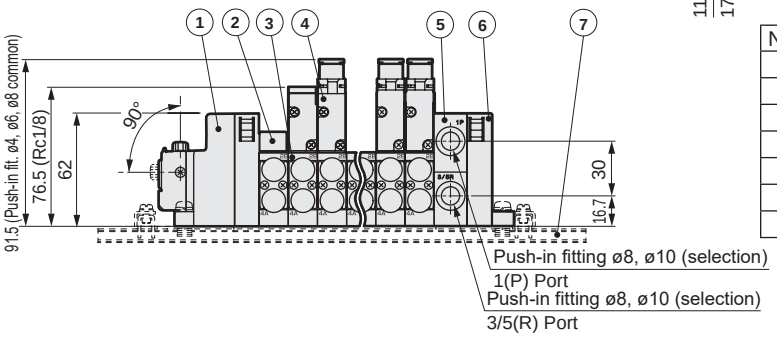

No.	Part name
1	Wiring block T30
2	Masking plate
3	Valve block
4	Solenoid valve body
5	Supply and exhaust block
6	End block R
7	DIN rail

● Push-in L fitting for supply and exhaust block (upward)

● ø8(CL8)

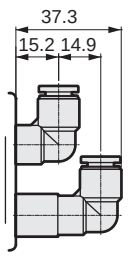

● ø10(CL10)

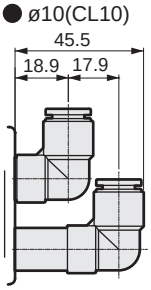

Dimensions CAD

MW4GA2

● Flat cable connector (T5*)

* The figure shows T51 (20-pin).
Flat cable connectors also have T53 (26-pin).
Dimensions are the same as T51.

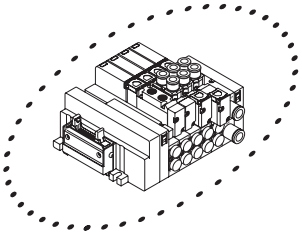

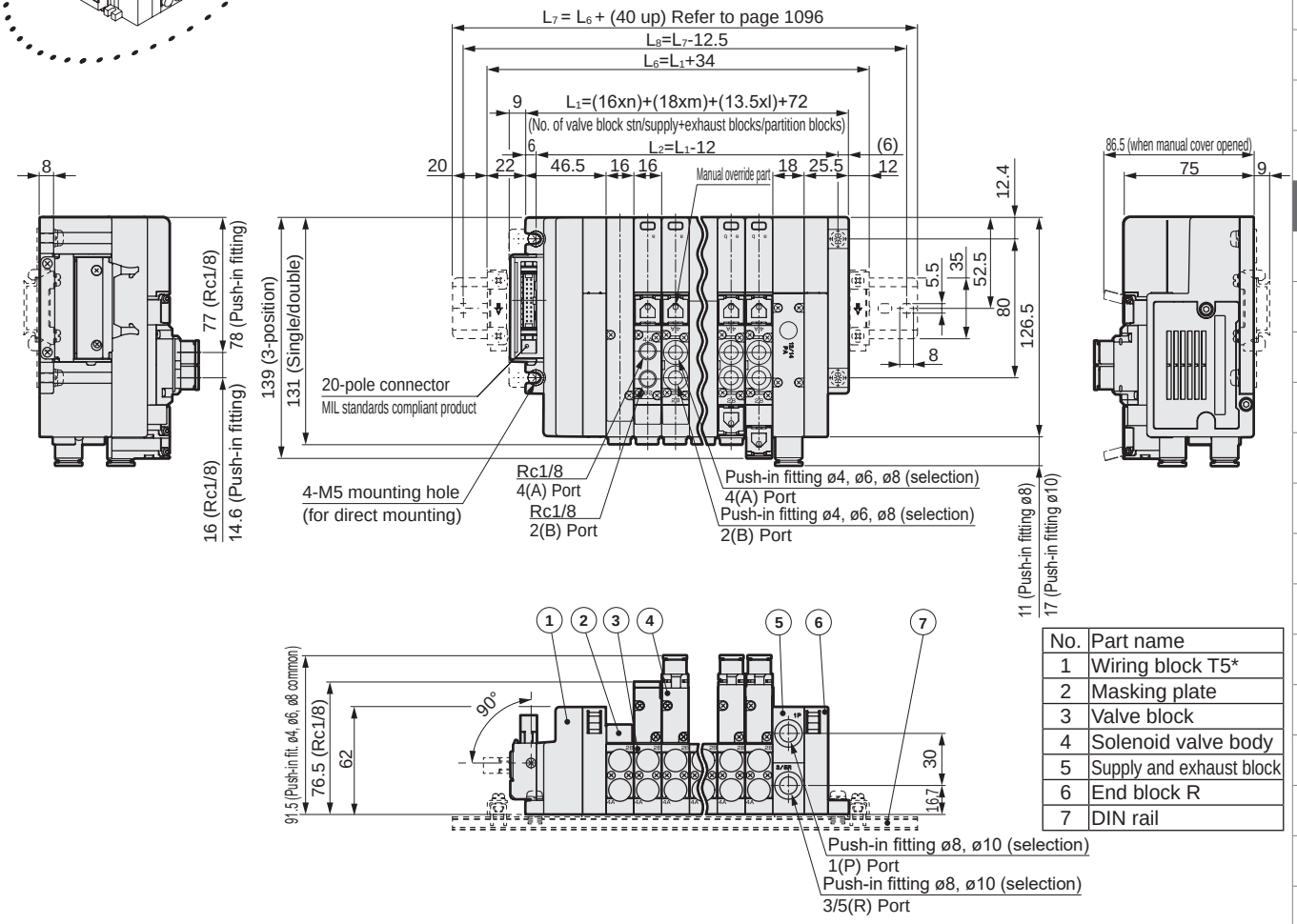

No.	Part name
1	Wiring block T5*
2	Masking plate
3	Valve block
4	Solenoid valve body
5	Supply and exhaust block
6	End block R
7	DIN rail

● Push-in L fitting for supply and exhaust block (upward)

● ø8(CL8)

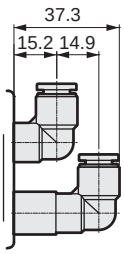

● ø10(CL10)

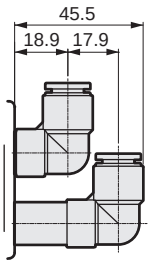

Dimensions CAD

MW4GA2

● Serial transmission (T7□)

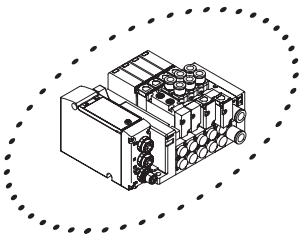

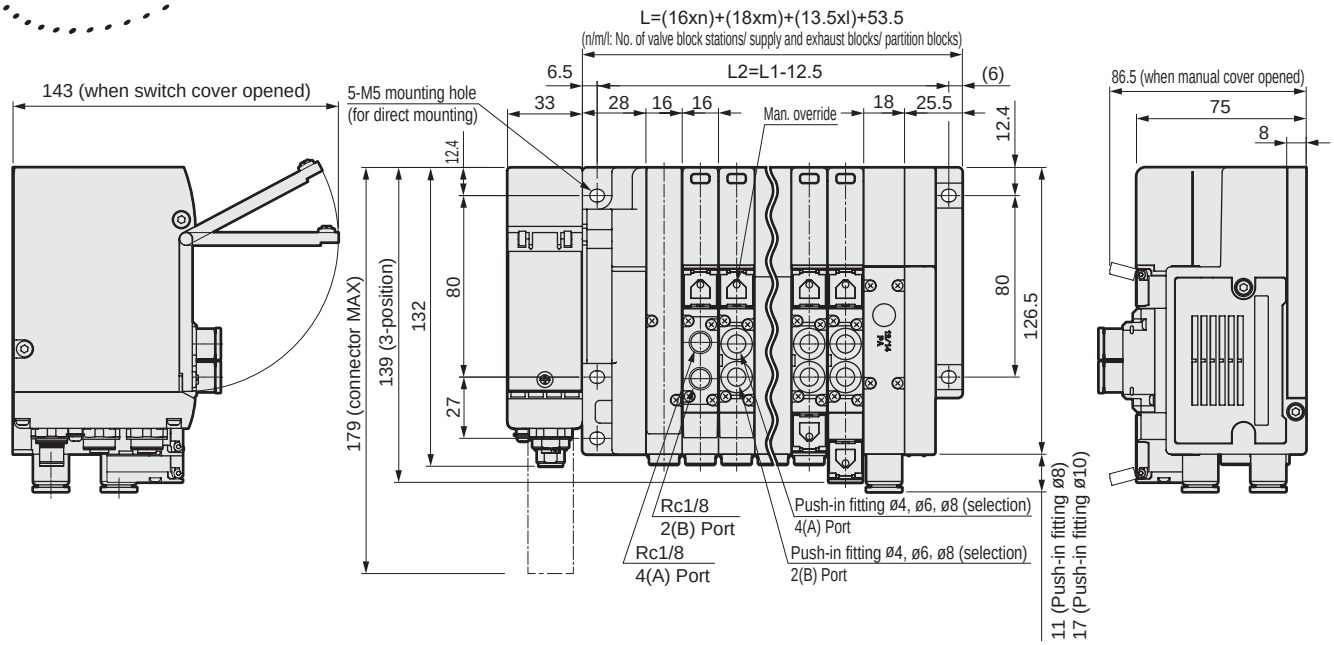

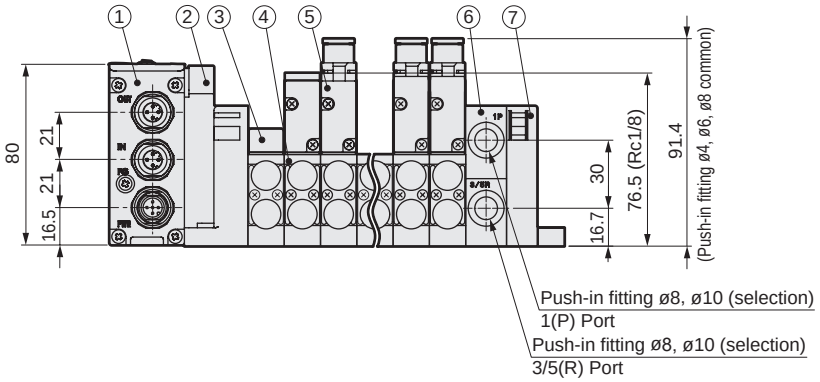

No.	Part name
1	Serial transmission block
2	Wiring block
3	Masking plate
4	Valve block
5	Solenoid valve body
6	Supply and exhaust block
7	End block R

● Push-in L fitting for supply and exhaust block (upward)

● ø8(CL8)

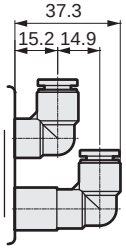

● ø10(CL10)

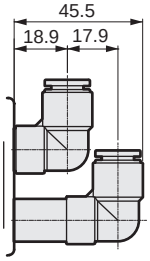

Dimensions CAD

MW4GA2

● Serial transmission (T7□B) with I/O type

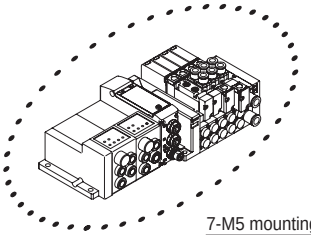

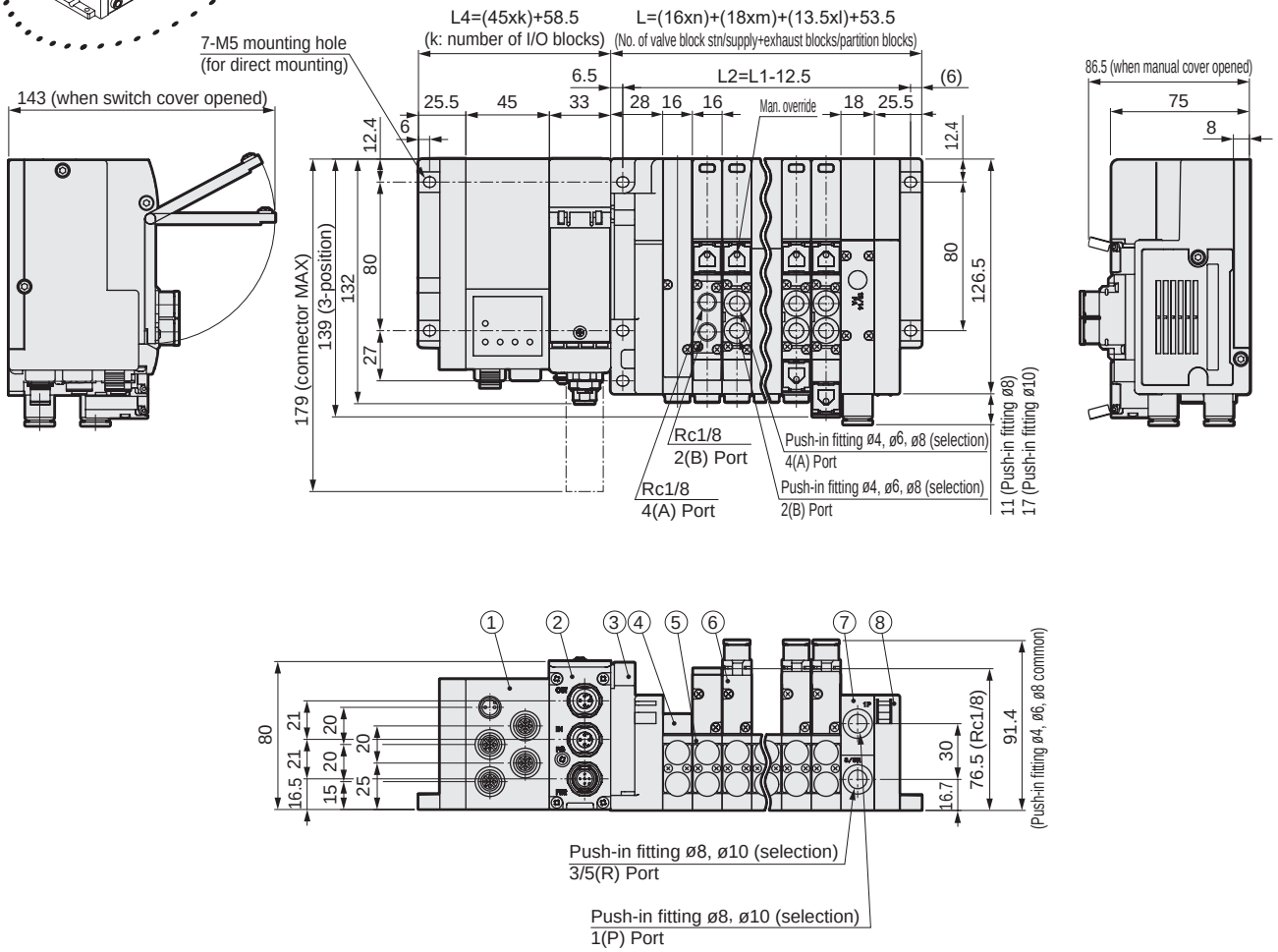

No.	Part name
1	I/O block
2	Serial transmission block
3	Wiring block
4	Masking plate
5	Valve block
6	Solenoid valve body
7	Supply and exhaust block
8	End block R

● Push-in L fitting for supply and exhaust block (upward)

● ø8(CL8)

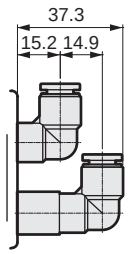

● ø10(CL10)

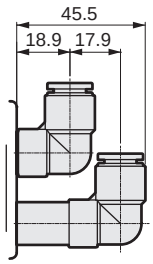

Dimensions CAD

MW4GA2

● Serial transmission CC-Link (T8G*)

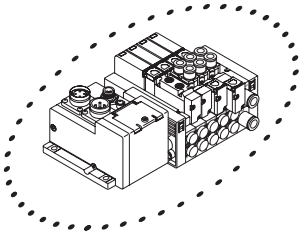

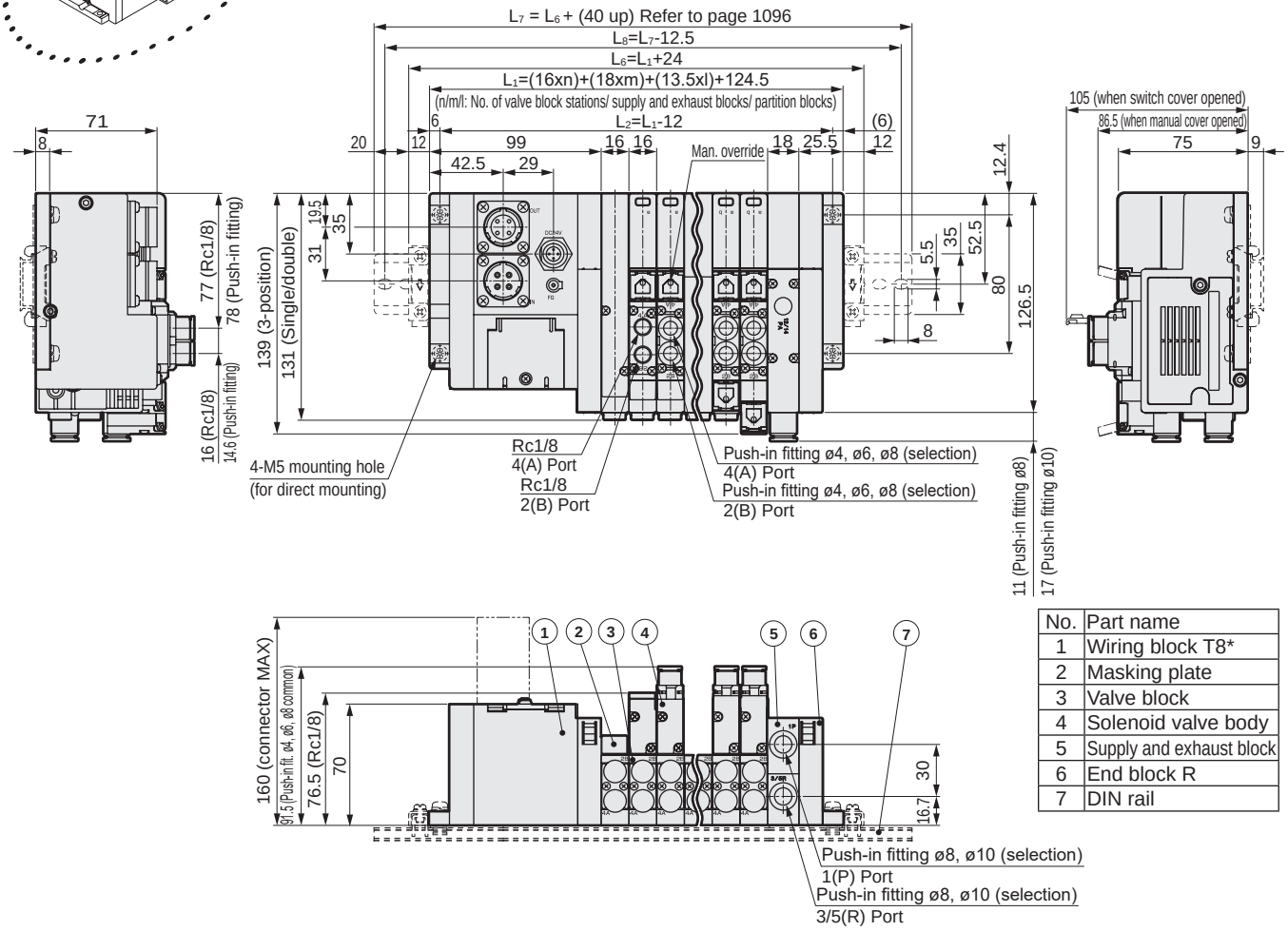

No.	Part name
1	Wiring block T8*
2	Masking plate
3	Valve block
4	Solenoid valve body
5	Supply and exhaust block
6	End block R
7	DIN rail

● Push-in L fitting for supply and exhaust block (upward)

● ø8(CL8)

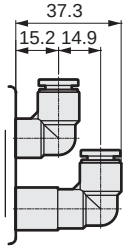

● ø10(CL10)

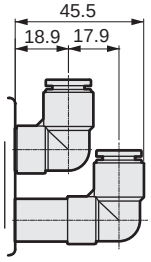

Dimensions CAD

MW4GA2

● Serial transmission CC-Link (T8G*)+I/O block

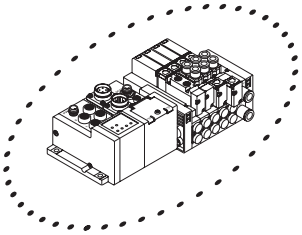

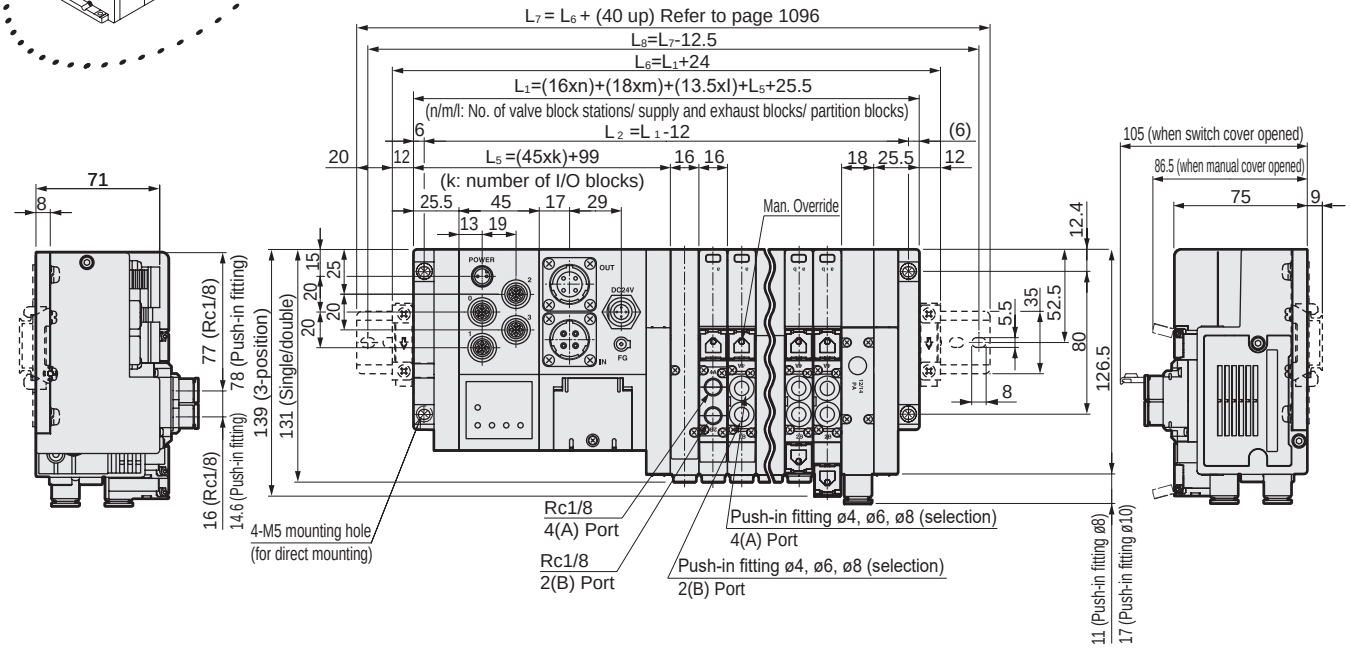

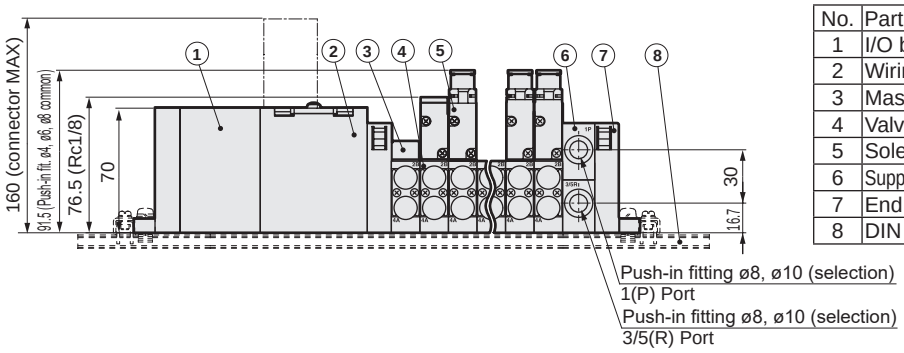

No.	Part name
1	I/O block
2	Wiring block T8*
3	Masking plate
4	Valve block
5	Solenoid valve body
6	Supply and exhaust block
7	End block R
8	DIN rail

● Push-in L fitting for supply and exhaust block (upward)

● ø8(CL8)

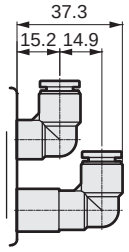

● ø10(CL10)

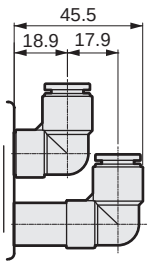

Dimensions CAD

MW4GA2

● Serial transmission DeviceNet (T8D*)

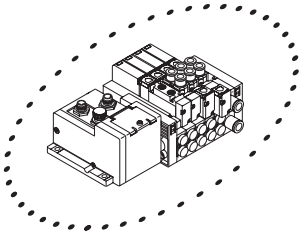

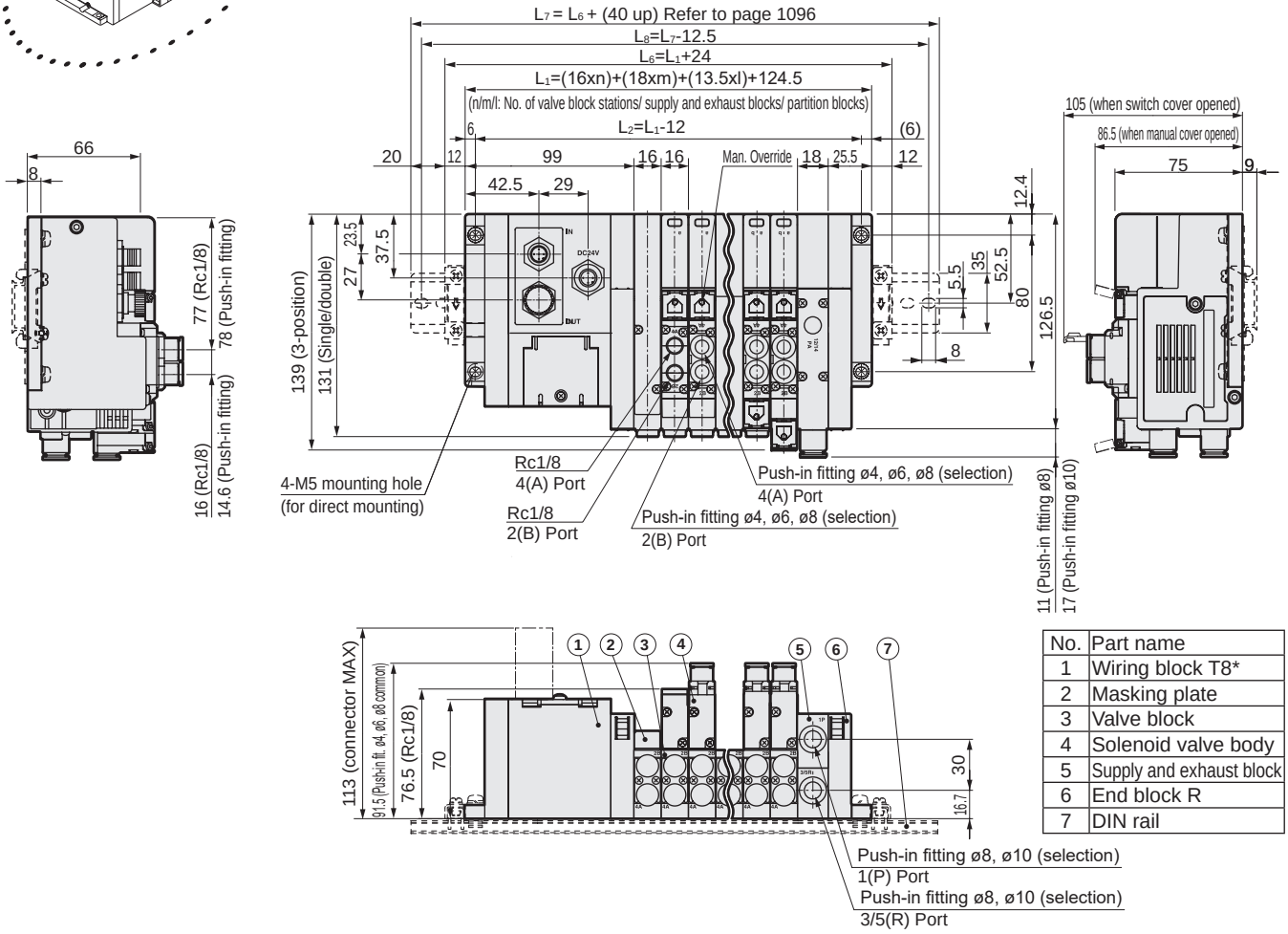

No.	Part name
1	Wiring block T8*
2	Masking plate
3	Valve block
4	Solenoid valve body
5	Supply and exhaust block
6	End block R
7	DIN rail

● Push-in L fitting for supply and exhaust block (upward)

● ø8(CL8)

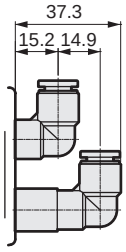

● ø10(CL10)

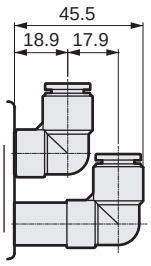

Dimensions CAD

MW4GA2

● Serial transmission device unit DeviceNet (T8D*)+I/O block

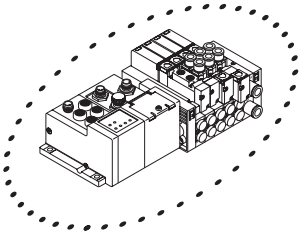

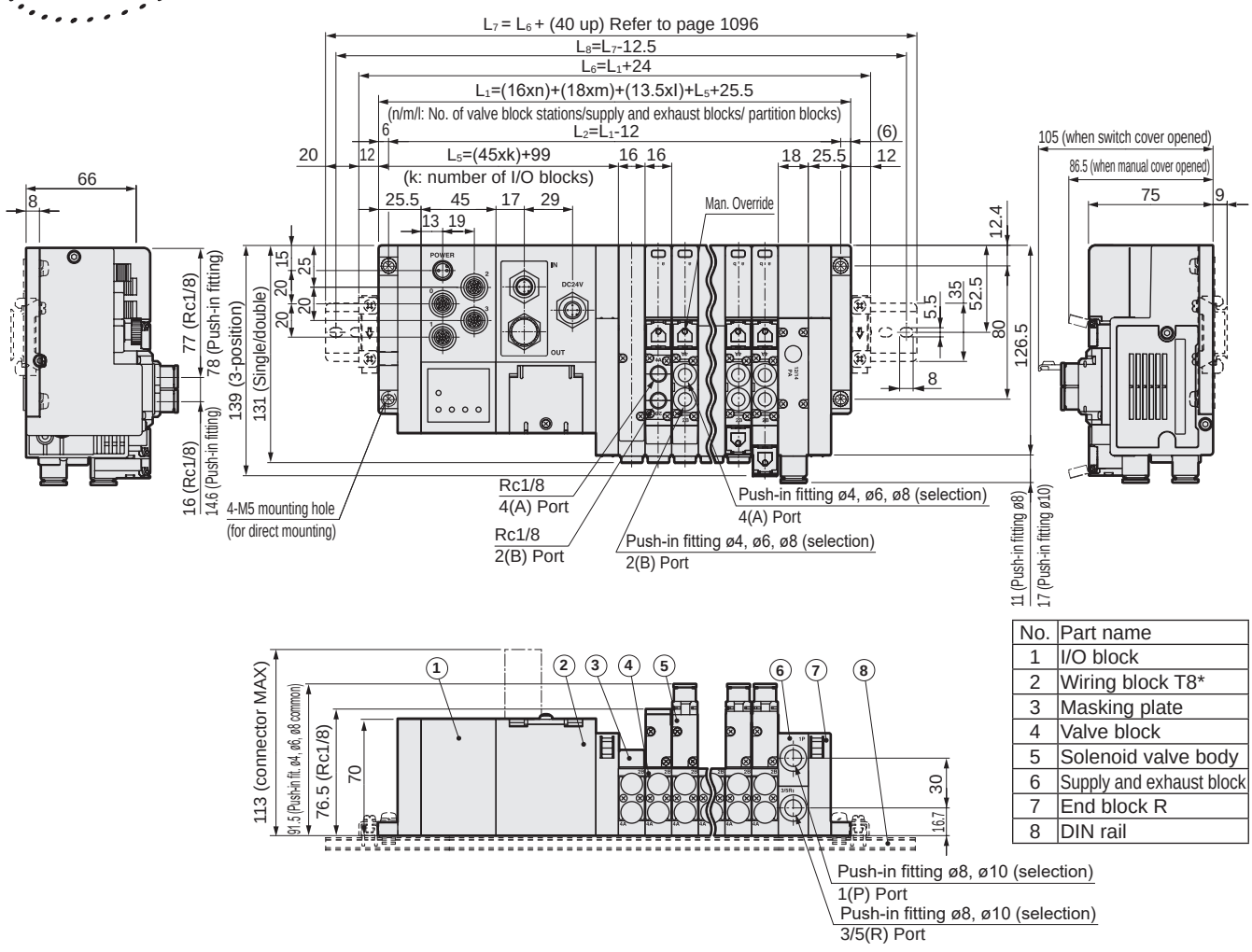

No.	Part name
1	I/O block
2	Wiring block T8*
3	Masking plate
4	Valve block
5	Solenoid valve body
6	Supply and exhaust block
7	End block R
8	DIN rail

● Push-in L fitting for supply and exhaust block (upward)

● ø8(CL8)

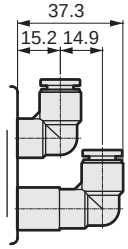

● ø10(CL10)

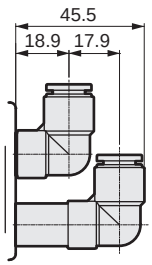

Dimensions CAD

MW4GA2

● Serial transmission CompoBus/S (T8C*)

Planned for end of production February 2022

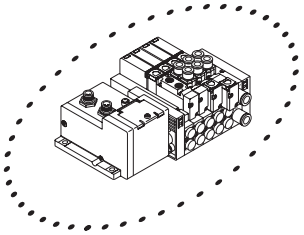

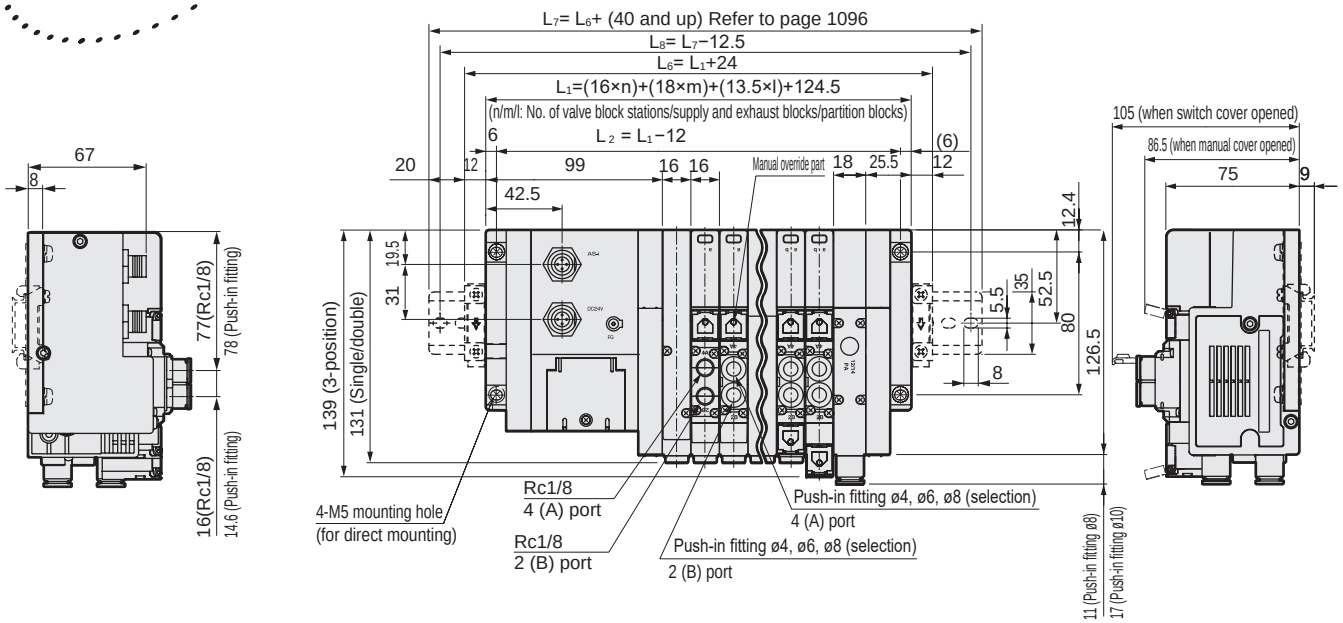

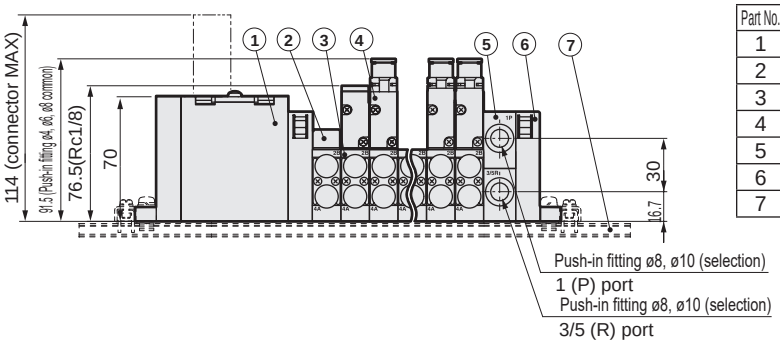

Part No.	Part name
1	Wiring block T8*
2	Masking plate
3	Valve block
4	Solenoid valve body
5	Supply and exhaust block
6	End block R
7	DIN rail

● Push-in L fitting for supply and exhaust block (upward)

● ø8 (CL8)

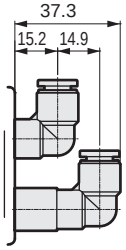

● ø10 (CL10)

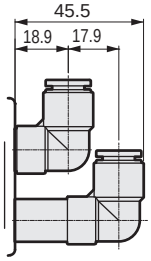

Dimensions CAD

MW4GA2

● Serial transmission CompoBus/S (T8C*) + I/O block

Planned for end of production February 2022

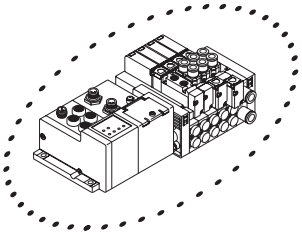

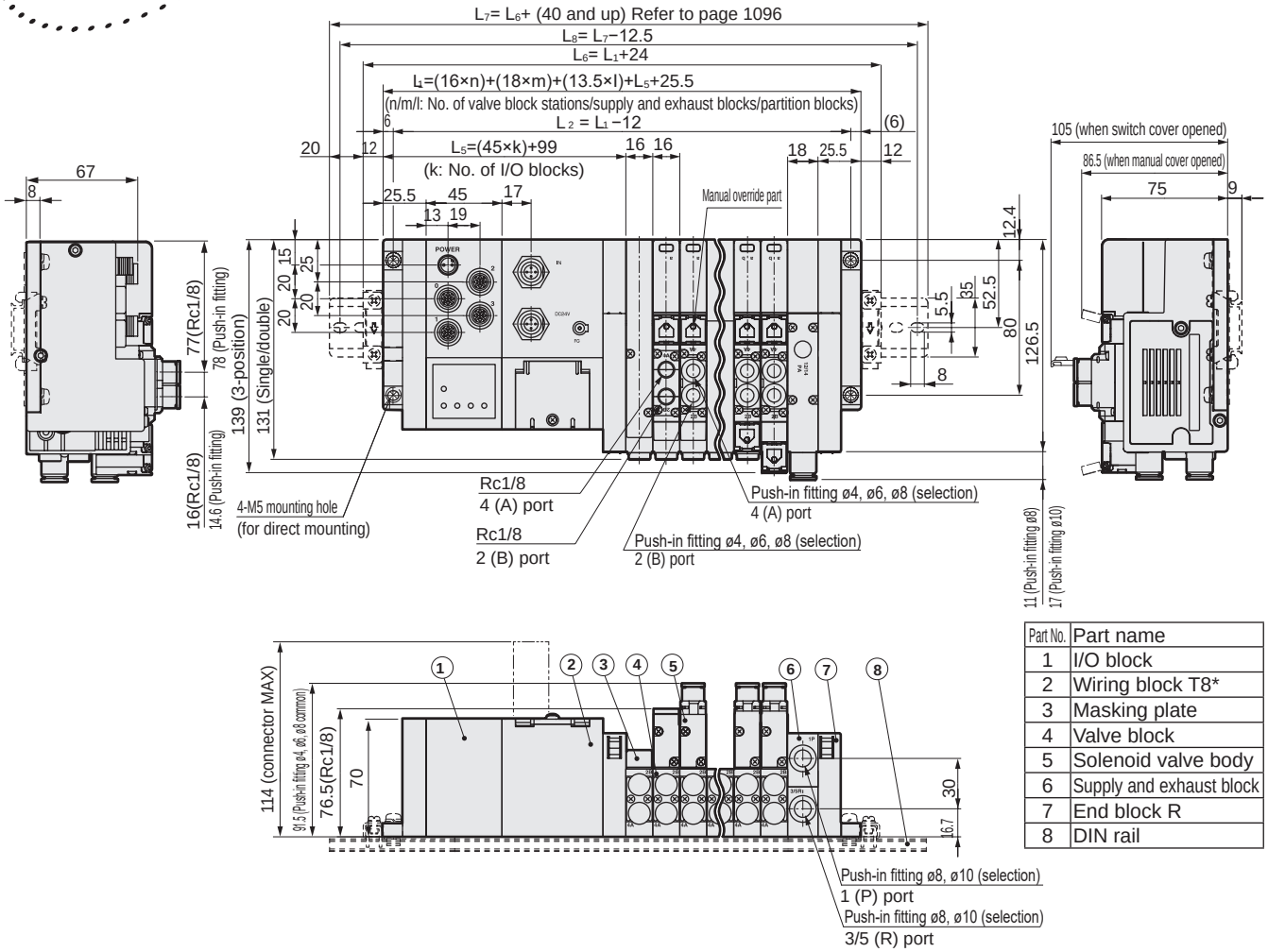

Part No.	Part name
1	I/O block
2	Wiring block T8*
3	Masking plate
4	Valve block
5	Solenoid valve body
6	Supply and exhaust block
7	End block R
8	DIN rail

● Push-in L fitting for supply and exhaust block (upward)

● ø8 (CL8)

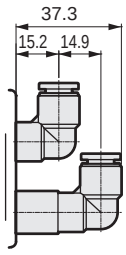

● ø10 (CL10)

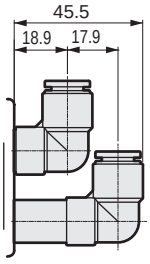

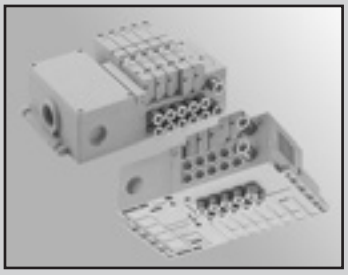

Reduced wiring manifold
Base side piping/base bottom piping

MW$^{3}_{4}$G$^{B}_{Z}$2-T1/2/3/5/7/8 Series

● Cylinder bore size: ø20 to ø80

CE Refer to the Ending for details. RoHS CAD

Manifold common specifications

1 MPa ≈ 145.0 psi, 1 MPa = 10 bar

Item	MW4GB2		MW4GZ2
Manifold	Block manifold		
Supply and exhaust method	Common supply/common exhaust (with check valve built-in)		
Pilot exhaust method	Internal pilot	Main valve/pilot valve common exhaust (pilot exhaust check valve built-in)	
	External pilot	Main valve/pilot valve individual exhaust	
Piping direction	Lateral direction from base		Downward from base
Valve and operation	Pilot operated soft spool valve		
Working fluid	Compressed air		
Max. working pressure MPa	0.7 (≈100 psi, 7 bar)		
Min. working pressure MPa	0.2 (≈29 psi, 2 bar) (*4)		
Proof pressure MPa	1.05 (≈150 psi, 10.5 bar)		
Ambient temperature °C	-5 (23°F) to 55 (131°F) (no freezing)		
Fluid temperature °C	5 (41°F) to 55 (131°F)		
Manual override	Non-locking/locking common (standard)		
Lubrication (*1)	Not required		
Degree of protection (*2)	Dust-proof/jet-proof (IP65) (*3)		
Vibration resistance m/s^2	49 or less		
Shock resistance m/s^2	294 or less		
Atmosphere	Cannot be used in corrosive gas environments		

*1: Use turbine oil Class 1 ISO VG32 for lubrication. Note that excessive lubricant may cause unstable operation.
*2: Tested according to the test method for IP65 (IEC60529 (IEC529: 1989-11)) standards. Refer to page 1103 for details.
3: The degree of protection of D sub-connector (T30) and flat cable connector (T5) is dust proof. Avoid water drops or oil, etc., during use.
*4: The working pressure range is 0 to 0.7 MPa when the external pilot (option code: K) is selected. Set the external pilot pressure between 0.2 and 0.7 MPa.

Electrical specifications

Item		W4GB2
Rated voltage V	DC	12, 24
	AC	100
Voltage fluctuation range		±10%
Holding current A	24 VDC	0.025
	12 VDC	0.050
	100 VAC	0.012
Power consumption W (*5)	24 VDC	0.6
	12 VDC	0.6
Apparent power VA (*6)	100 VAC	1.2
Thermal class		B

*5: Surge suppressor and indicator are supplied as standard.
*6: Multi-connector, D sub-connector and flat cable connector are not available with 100 VAC.
Serial transmission is not available with 100 VAC and 12 VDC.

JIS symbol

● Two 3-port valves integrated
(A side valve: NC, B side valve: NC)

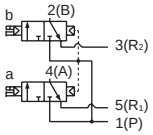

● 5-port valve

2-position single

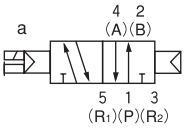

2-position double

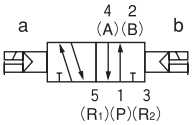

3-position all ports closed

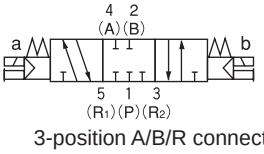

3-position A/B/R connection

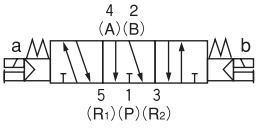

3-position P/A/B connection

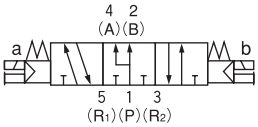

Individual specifications

Item		MW4GB2/MW4GZ2													
		T10	T20	T30	T51	T53	T7EC □1	T7EC □2	T7EC □7	T7EN □1	T7EN □2	T7EN □7	T7EB □1	T7EB □2	T7EB □7
Max. station No.	Standard wiring	18	—	18	18	18	16	18	16	16	18	16	16	18	16
	Double wiring	9	8	12	9	12	8	16	8	8	16	8	8	16	8
Max. number of solenoids		18	16	24	18	24	16	32	16	16	32	16	16	32	16
Port size	A/B Port	Push-in fitting ø4, ø6, ø8, Rc1/8													
	P/R port	Push-in fitting ø8, ø10													

Item		MW4GB2/MW4GZ2					
		T7EP □1	T7EP □2	T7EP □7	T8G1 T8D1	T8G2 T8D2	T8G7 T8D7
Max. station No.	Standard wiring	16	18	16	16	18	16
	Double wiring	8	16	8	8	16	8
Max. number of solenoids		16	32	16	16	32	16
Port size	A/B Port	Push-in fitting ø4, ø6, ø8, Rc1/8					
	P/R Port	Push-in fitting ø8, ø10					

For weight, refer to page 1022.

Performance/characteristics by model

Item			MW4GB2/MW4GZ2	
			ON	OFF
Response time ms	Two 3-port valves integrated		12	29
	2-position	Single	22	24
		Double	26	—
	3-position		25	35

The response time is the value with supply pressure of 0.5 MPa at 20°C and without lubrication. It depends on the pressure and the lubricant quality.

Flow characteristics

Model No.	Solenoid position		P→A/B		A/B→R	
			C[dm^3/(s·bar)]	b	C[dm^3/(s·bar)]	b
MW3GA2	Two 3-port valves integrated		1.7	0.42	2.2	0.15
MW4GB2 MW4GZ2	2-position		2.4	0.36	1.7	0.25
	3-position	All ports closed	2.1	0.37	2.2	0.22
		ABR connection	2.2	0.35	1.7	0.25
		PAB connection	2.3	0.32	2.3	0.24

*1: Effective cross-sectional area S and sonic conductance C are converted as S ≈ 5.0 x C.
*2: Values of the 2-position and ABR connection are those with integrated check valve.

Reduced wiring specifications

Item	T10	T20	T30	T51	T53
Type	Common terminal block M3 thread	Multi-connector	D-sub-connector	20P Flat cable connector without power supply terminal	26P Flat cable connector Without power supply terminal
Connector	–	HIROSE ELECTRIC CO. LTD. RM21WTP-20S 20-pin	D-sub-connector (female) 25-pin	MIL-C-83503 standard compliant pressure welding socket 20-pin	MIL-C-83503 standard compliant pressure welding socket 26-pin

Specifications of serial transmission device (adapter) stations (refer to page 1086 for PLC compatibility table)

The communication setting file can be downloaded from the CKD website (https://www.ckd.co.jp/en/).

Item		unit dedicated for valves (without I/O block)				unit with I/O block	
		T7EC1	T7EC2	T7ECP1	T7ECP2	T7ECB7	T7ECPB7
Network name		EtherCAT				EtherCAT	
Power supply voltage	Unit side	24 VDC ±10%				24 VDC ±10%	
	Valve side	24 VDC + 10%, -5%				24 VDC + 10%, -5%	
Current consumption	Unit side	110 mA or less				110 mA or less (excluding input block current)	
	Valve side	15 mA or less (excluding load current)				15 mA or less (excluding load current)	
Valve output		NPN		PNP		NPN	PNP
Input/output point count		0/16	0/32	0/16	0/32	16/16	
Operation display		Power supply/communication status/valve power supply					
Degree of protection		IP65					

Item		unit dedicated for valves (without I/O block)				unit with I/O block	
		T7EN1	T7EN2 *1	T7ENP1	T7ENP2 *1	T7ENB7	T7ENPB7
Network name		EtherNet/IP					
Power supply voltage	Unit side	24 VDC ±10%					
	Valve side	24 VDC + 10%, -5%					
Current consumption	Unit side	130 mA or less				130 mA or less ((*2): excluding input block current)	
	Valve side	15 mA or less (excluding load current)					
Valve output		NPN output		PNP output		NPN output	PNP output
I/O points		16-point output	32-point output	16-point output	32-point output	16-point input/16-point output	16-point input/16-point output
LED display	Power supply	2 points: Unit power supply/valve power supply					
	Communication	4 points: MS, NS, L/A IN, L/A OUT					
Degree of protection		IP65					

*1: No 32-point output when connecting with W4G4 valve. *2: If the power supply of the I/O block also serves as the unit power supply, refer to page 991.

Item		unit dedicated for valves (without I/O block)				unit with I/O block	
		T7EB1	T7EB2 *1	T7EBP1	T7EBP2 *1	T7EBB7	T7EBPB7
Network name		CC-Link IEF Basic					
Power supply voltage	Unit side	24 VDC ±10%					
	Valve side	24 VDC + 10%, -5%					
Current consumption	Unit side	130 mA or less				130 mA or less ((*2): excluding input block current)	
	Valve side	15 mA or less (excluding load current)					
Valve output		NPN output		PNP output		NPN output	PNP output
I/O points		16-point output	32-point output	16-point output	32-point output	16-point input/16-point output	16-point input/16-point output
LED display	Power supply	2 positions: PW, PW (V)					
	Communication	4 positions: RUN, ERR, L/A IN, L/A OUT, INFO					
Degree of protection		IP65					

*1: No 32-point output when connecting with W4G4 valve. *2: If the power supply of the I/O block also serves as the unit power supply, refer to page 991.

Item		unit dedicated for valves (without I/O block)				unit with I/O block	
		T7EP1	T7EP2 *1	T7EPP1	T7EPP2 *1	T7EPB7	T7EPPB7
Network name		PROFINET					
Power supply voltage	Unit side	24 VDC ±10%					
	Valve side	24 VDC + 10%, -5%					
Current consumption	Unit side	130 mA or less				130 mA or less ((*2): excluding input block current)	
	Valve side	15 mA or less (excluding load current)					
Valve output		NPN output		PNP output		NPN output	PNP output
I/O points		16-point output	32-point output	16-point output	32-point output	16-point input/16-point output	16-point input/16-point output
LED display	Power supply	2 positions: PW, PW (V)					
	Communication	4 positions: RUN, ERR, L/A IN, L/A OUT, INFO					
Degree of protection		IP65					

*1: No 32-point output when connecting with W4G4 valve. *2: If the power supply of the I/O block also serves as the unit power supply, refer to page 991.

Specifications of serial transmission device (adapter) stations (refer to page 1086 for PLC compatibility table)

Download the communication setting file from the CKD website (https://www.ckd.co.jp/en/).

Item \ Network name / unit model No.		CC-Link(Ver1.10)			DeviceNet *1		
		T8G1	T8G2	T8G7	T8D1	T8D2	T8D7
Communication speed		156K/625K/2.5M/5M/10Mbps			125K/250K/500Kbps		
Power supply voltage	Unit side	24 VDC ±10%			24 VDC ±10%		
	Valve side	24 VDC+10%, -5%			24 VDC+10%, -5%		
	Communication side	—			11 to 25 VDC		
Current consumption	Unit side	60 mA or less	100 mA or less	75 mA or less (*2)	70 mA or less	90 mA or less	80 mA or less (*2)
	Valve side	15 mA or less (when all points are OFF)			15 mA or less (when all points are OFF)		
	Communication side	—			50 mA or less		
Valve output		NPN			NPN		
Input/output point count		0/16	0/32	16/16	0/16	0/32	16/16
Occupied number		1 station			2 bytes	4 bytes	4 bytes
Operation display		Power supply/communication status/valve power supply			Communication status/valve power supply		

*1: Compatible with DeviceNet compliant networks (DLNK, etc.) as well.

*2: If the feed power supply of the input blocks also serves as the unit power supply, use the formula below for calculation.

(unit current consumption) = [*] + (35 mA x number of input blocks) + (total internal current consumption of connected sensors)

[*] ...T8G7:60mA, T8D7:80mA

Note that for T8G7 and T8D7 unit side current consumption, select the sensor so that the current consumption is 600mA or less.

I/O block specifications

● Input block

Model No. / Item	NW4GB2-IN-N-K	NW4GB2-IN-N-B	NW4GB2-IN-P-K	NW4GB2-IN-P-B
Number of inputs	4 points			
Rated input voltage	24 VDC			
Rated input current	7 mA			
ON voltage	15 VDC or more (between input terminals and V)		15 VDC or more (between input terminals and G)	
OFF voltage/OFF current	5 VDC or less (between input terminal and V)/1.5 mA or less		5 VDC or less (between input terminal and G)/1.5 mA or less	
Input	Sink		Source	
Supply power	Common with unit power supply	Externally supplied power	Common with unit power supply	Externally supplied power
Operation display	Power supply/input status			

*1: Refer to page 1056 for model No.

● Output block

Model No. / Item	NW4GB2-OUT-N-B	NW4GB2-OUT-P-B
Output points	4 points	
Rated voltage	24 VDC	
Max. load current	1 A/1 point (3 A/common)	
Residual voltage	1.5 V or less	
Output	Sink	Source
Protection circuit	Overcurrent protection/reverse connection protection	
Fuse	Power supply for external load: 24 VDC and 5 A (can be replaced)	
Operation display	Power supply/output status	

*1: Refer to page 1056 for model No.

MW$^{3}_{4}$GB2-T1/2/3/5 Series

Reduced wiring manifold; base side piping/base bottom piping

How to order

Common terminal block/multi-connector/D-sub-connector/flat cable connector

● Manifold model No.

MW4GB2 1 0 - C8 – T10 W H D - 5 - 3

● 3-port manifold model No.

MW3GB2 66 0 - C8 – T10 W H D - 5 - 3

● Discrete valve block with solenoid valve

NW4GB2 1 0 - C8 - ○ W H — 3

● Discrete valve block with 3-port solenoid valve

NW3GB2 66 0 - C8 - ○ W H — 3

● Single valve for mounting base

W4GB2 1 9 - 00 — H — 3

● 3-port discrete valve for mounting base

W3GB2 66 9 - 00 — H — 3

Ⓐ Model No.
Ⓑ Solenoid position
Ⓒ Port size (*1) (*2)
Ⓓ Electrical connections (*)
Ⓔ Reduced wiring connection
Ⓕ Terminal/connector pin Array method
Ⓖ Option (*4)
Ⓗ Mount Type
Ⓘ Station No.
Ⓙ Voltage

· For the cable with D-sub-connector model No., refer to page 1064.
· For the cable for flat cable connector model No., refer to page 1079.

Code	Description	MW3GB2	MW4GB2	NW3GB2	NW4GB2	W3GB2	W4GB2
	Ⓐ Model No. Manifold / Discrete valve block with solenoid valve / Discrete valve						
	Ⓑ Solenoid position						
1	2 position single		●		●		●
2	2-position double		●		●		●
3	3-position all ports closed		●		●		●
4	3-position ABR connection		●		●		●
5	3-position PAB connection		●		●		●
66	Two 3-port valves integrated (*10) — A side valve: Normally closed / B side valve: Normally closed	●		●		●	
8	Mix manifold (when there are multiple solenoid positions)	●	●				
	Ⓒ Port size (port A/B)						
C4	ø4 push-in fitting	●	●	●	●		
C6	ø6 push-in fitting	●	●	●	●		
C8	ø8 push-in fitting	●	●	●	●		
CL6	ø6 push-in L-fitting (upward)	●	●	●	●		
CL8	ø8 push-in L-fitting (upward)	●	●	●	●		
CX	Push-in fitting mix	●	●				
Single side plug	Port A	Port B					
C4NC	ø4 push-in fitting	Plug	●	●	●	●		
C6NC	ø6 push-in fitting	Plug	●	●	●	●		
C8NC	ø8 push-in fitting	Plug	●	●	●	●		
C4NO	Plug	ø4 push-in fitting	●	●	●	●		
C6NO	Plug	ø6 push-in fitting	●	●	●	●		
C8NO	Plug	ø8 push-in fitting	●	●	●	●		
CL6NC	ø6 push-in L-fitting (upward)	Plug	●	●	●	●		
CL8NC	ø8 push-in L-fitting (upward)	Plug	●	●	●	●		
CL6NO	Plug	ø6 push-in L-fitting (upward)	●	●	●	●		
CL8NO	Plug	ø8 push-in L-fitting (upward)	●	●	●	●		
	Ⓓ Electrical connections						
Blank	DC connector relay board specifications				●	●		
2 to 8	Select the AC cable length from page 1051.				●	●		
	Ⓔ Reduced wiring (lamp and surge suppressor provided as standard)						
	Refer to the next page for reduced wiring.						
	Ⓕ Terminal/connector pin array						
Blank	Standard wiring (*5)	●	●	●	●		
W	Double wiring (*5)	●	●	●	●		
	Ⓖ Option						
Blank	No option	●	●	●	●	●	●
M	Manual override of non-locking (*6)	●	●	●	●	●	●
M7	Manual device with OFF function (*6)	●	●	●	●	●	●
H	With check valve (*7)	●	●	●	●	●	●
K	External pilot	●	●				
A	Ozone/coolant proof product	●	●	●	●	●	●
F	Port A/B filter built in (*8)	●	●	●	●		
Z1	Air supply spacer (*4)(*9)	●	●				
Z3	Exhaust spacer (*4)(*9)	●	●				
Z6	Spacer pilot check valve (*4)(*9)	●	●				
Z8	Individual air supply compatible spacer with in-stop valve spacer (*4)(*9)(*10)	●	●				
	Ⓗ Mount type						
Blank	Direct mount	●	●				
D	DIN rail mount	●	●				
	Ⓘ Station No.						
2 to 18	2 stations to 18 stations (Differs depending on the reduced wiring specifications. Refer to the individual specifications (page 1010).)	●	●				
	Ⓙ Voltage						
1	100 VAC (rectifier integrated)	●	●	●	●	●	●
3	24 VDC	●	●	●	●	●	●
4	12 VDC	●	●	●	●	●	●

⚠ Precautions for model selection

Be sure to fill in the "Manifold specifications sheet".

*1: Ports A and B plug specifications (*NC/*NO) are available for 2-position single only. Specify the port P/R bore size in the supply and exhaust block section.
2: CL push-in L fitting (upward) is available for the single and double types only. Long elbow is for port A and short elbow for port B. Ports A and B are the same size in the push-in L fitting (upward) mix (CX). If CL* NC/NO is selected, the fitting is a short elbow.
*3: With AC, when a change of specifications is expected, select a valve block with masking plate as a spare block.
*4: Specify the spacer mounting position and quantity on the manifold specifications sheet. Stacking of spacers is not possible. Combination with the masking plate is not supported. For details, refer to page 1057.
*5: Blank...The wiring will be based on the type of valve mounted.
W.....All wired as double solenoid regardless of the type of valve used. It is not necessary to select W if no single solenoid is used.
Double wiring will automatically be applied to multi-connector T20 and AC voltage type even if W is not specified, since they are only for double wiring.
*6: Manual override of non-locking (M) and manual override with OFF function (M7) cannot be selected together.
*7: Check valve (H) is not available for 3-position all ports closed and PAB connection. Refer to page 1105 for details on the check valve.
*8: A filter is built into port P.
*9: Not available when the fitting for port A/B is elbow.
*10: Not compatible with combination with external pilot (K).

[Reduced wiring list]

Ⓐ Model No.						
		Manifold		Discrete valve block with solenoid valve		Discrete solenoid valve
		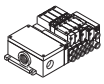				
		MW3GB2	MW4GB2	NW3GB2	NW4GB2	W3GB2	W4GB2
Ⓔ Reduced wiring (lamp and surge suppressor provided as standard)							
T10	Common terminal block (M3 screw) Left-sided spec.	●	●				
T20	Multi-connector Left-sided spec. (*11)	●	●				
T30	D-sub-connector Left-sided spec. (*11)	●	●				
T51	20-pin flat cable connector (without power supply terminal) Left-sided spec. (*11)	●	●				
T53	26-pin flat cable connector (without power supply terminal) Left-sided spec. (*11)	●	●				

(*11): Multi-connector (T20), D-sub-connector (T30), 100 VAC is not available in flat cable connector (T5*) connection specifications.

Ozone-proof specifications • Coolant proof specifications

Select option A of Item Ⓖ in How to order on pages 1014, 1016, 1018 and 1020.

Specifications for rechargeable battery (Catalog No. CC-1226A)

For use in the rechargeable battery manufacturing process, materials used for all parts are limited

** – Voltage – **P40**

CE marking specifications

** – Voltage – **ST**

• Standard voltage of 24 VDC or less is CE marking-compatible even if the model No. is not indicated with "ST".

MW$^{3}_{4}$GZ2-T1/2/3/5 Series

Reduced wiring manifold; base side piping/base bottom piping

How to order

Common terminal block/multi-connector/D-sub-connector/flat cable connector

● Manifold model No.

MW4GZ2 1 0 - C8 – T10 W H — 5 - 3

● 3-port manifold model No.

MW3GZ2 66 0 - C8 – T10 W H D - 5 - 3

● Discrete valve block with solenoid valve

NW4GZ2 1 0 - C8 - ○ W H — 3

● Discrete valve block with 3-port solenoid valve

NW3GZ2 66 0 - C8 - ○ W H — 3

● Single valve for mounting base(*1)

W4GB2 1 9 - 00 — H — 3

● 3-port discrete valve for integrated base(*1)

W3GB2 66 9 - 00 — H — 3

Ⓐ Model No.
Ⓑ Solenoid position
Ⓒ Port size (*2) (*3)
Ⓓ Electrical connections (*4)
Ⓔ Reduced wiring connection
Ⓕ Terminal/connector pin Array method
Ⓖ Option (*5)
Ⓗ Mount Type
Ⓘ Station No.
Ⓙ Voltage

· For the cable with D-sub-connector model No., refer to page 1058.
· For the cable for flat cable connector model No., refer to page 1079.

For circuit diagrams (solenoid valve interior), refer to page 970.

⚠ Precautions for model selection

Be sure to fill in the "Manifold specifications sheet".

*1: The W4GB2*9 discrete solenoid valve is used for the NW4GZ2 discrete valve block with solenoid valve.
*2: Ports A and B plug specifications (*NC/*NO) are available for 2-position single only. Specify the port P/R bore size in the supply and exhaust block section.
3: CL push-in L fitting (upward) is available for the single and double types only. Long elbow is for port A and short elbow for port B. Ports A and B are the same size in the push-in L fitting (upward) mix (CX). If CL* NC/NO is selected, the fitting is a short elbow.
*4: AC: If a change of specifications is expected, select a valve block with masking plate as a spare block.
*5: Specify the spacer mounting position and quantity on the manifold specifications sheet. Stacking of spacers is not possible. Combination with the masking plate is not supported. For details, refer to page 1057.
*6: Blank.....The wiring will be based on the type of valve mounted.
W.....All wired as double solenoid regardless of the type of valve used. It is not necessary to select W if no single solenoid is used.
Double wiring will automatically be applied to multi-connector T20 and AC voltage type even if W is not specified, since they are only for double wiring.
*7: Manual override of non-locking (M) and manual override with OFF function (M7) cannot be selected together.
*8: Check valve (H) is not available for 3-position all ports closed and PAB connection. Refer to page 1105 for details on the check valve.
*9: A filter is built into port P.
*10: Not available when the fitting for port A/B is elbow.
*11: Not compatible with combination with external pilot (K).

Ⓐ Model No.	Manifold		Discrete valve block with solenoid valve		Discrete valve	
	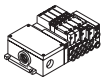					
Code / Description	MW3GZ2	MW4GZ2	NW3GZ2	NW4GZ2	W3GB2	W4GB2
Ⓑ Solenoid position						
1 — 2 position single		●		●		●
2 — 2-position double		●		●		●
3 — 3-position all ports closed		●		●		●
4 — 3-position ABR connection		●		●		●
5 — 3-position PAB connection		●		●		●
66 — Two 3-port valves Integrated (*11) (A side valve: Normally closed / B side valve: Normally closed)	●		●		●	●
8 — Mix manifold (when there are multiple solenoid positions)	●	●				
Ⓒ Port size (port A/B)						
C4 — ø4 push-in fitting	●	●	●	●		
C6 — ø6 push-in fitting	●	●	●	●		
C8 — ø8 push-in fitting	●	●	●	●		
CX — Push-in fitting mix	●	●				
Single side plug — Port A / Port B						
C4NC — ø4 push-in fitting / Plug	●	●	●	●		
C6NC — ø6 push-in fitting / Plug	●	●	●	●		
C8NC — ø8 push-in fitting / Plug	●	●	●	●		
C4NO — Plug / ø4 push-in fitting	●	●	●	●		
C6NO — Plug / ø6 push-in fitting	●	●	●	●		
C8NO — Plug / ø8 push-in fitting	●	●	●	●		
Ⓓ Electrical connections						
Blank — DC connector relay board specifications			●	●		
2 to 8 — Select the AC cable length from page 1051.			●	●		
Ⓔ Reduced wiring (lamp and surge suppressor provided as standard)						
Refer to the next page for reduced wiring.						
Ⓕ Terminal/connector pin array						
Blank — Standard wiring (*6)	●	●	●	●		
W — Double wiring (*6)	●	●	●	●		
Ⓖ Option						
Blank — No option	●	●	●	●	●	●
M — Manual override of non-locking (*7)	●	●	●	●	●	●
M7 — Manual device with OFF function (*7)	●	●	●	●	●	●
H — With check valve (*8)	●	●	●	●	●	●
K — External pilot	●	●				
A — Ozone/coolant proof product	●	●	●	●	●	●
F — Port A/B filter built in (*9)	●	●	●	●		
Z1 — Air supply spacer (*5)	●	●				
Z3 — Exhaust spacer (*5)	●	●				
Z6 — Spacer pilot check valve (*5)(*10)	●	●				
Z8 — Individual air supply compatible spacer with in-stop valve spacer (*5)(*10)(*11)	●	●				
Ⓗ Mount type						
Blank — Direct mount	●	●				
D — DIN rail mount	●					
Ⓘ Station No.						
2 to 18 — 2 stations to 18 stations (Differs depending on the reduced wiring specifications. Refer to the individual specifications (page 1010).)	●	●				
Ⓙ Voltage						
1 — 100 VAC (rectifier integrated)	●	●	●	●	●	●
3 — 24 VDC	●	●	●	●	●	●
4 — 12 VDC	●	●	●	●	●	●

indicates not available.

[Reduced wiring list]

Ⓔ Reduced wiring (lamp and surge suppressor provided as standard)		Ⓐ Model No.					
		Manifold		Discrete valve block with solenoid valve		Discrete valve	
		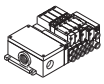					
		MW3GZ2	MW4GZ2	NW3GZ2	NW4GZ2	W3GB2	W4GB2
T10	Common terminal block (M3 screw) Left-sided spec.	●	●				
T20	Multi-connector Left-sided spec. (*12)	●	●				
T30	D-sub-connector Left-sided spec. (*12)	●	●				
T51	20-pin flat cable connector (without power supply terminal) Left-sided spec. (*12)	●	●				
T53	26-pin flat cable connector (without power supply terminal) Left-sided spec. (*12)	●	●				

(*12): Multi-connector (T20), D-sub-connector (T30), 100 VAC is not available in flat cable connector (T5*) connection specifications.

Ozone-proof specifications • Coolant proof specifications

Select option A of Item Ⓖ in How to order on pages 1014, 1016 and 1018.

Specifications for rechargeable battery (Catalog No. CC-1226A)

For use in the rechargeable battery manufacturing process, materials used for all parts are limited

** – Voltage – **P40**

CE marking specifications

** – Voltage – **ST**

• Standard voltage of 24 VDC or less is CE marking-compatible even if the model No. is not indicated with "ST".

MW$^{3}_{4}$GB2-T7/T8 Series

Reduced wiring manifold; base side piping/base bottom piping

How to order

Serial transmission

● Manifold model No.

MW4GB2 1 0- C8 – T8G1 W H D - 5 - 3

● 3-port manifold model No.

MW3GB2 66 0- C8 – T8G1 W H D - 5 - 3

● Discrete valve block with solenoid valve

NW4GB2 1 0- C8 - ○ W H — 3

● Discrete valve block with 3-port solenoid valve

NW3GB2 66 0- C8 - ○ W H — 3

● Single valve for mounting base

W4GB2 1 9- 00 — H — 3

● 3-port discrete valve for mounting base

W3GB2 66 9- 00 — H — 3

Ⓐ Model No.
Ⓑ Solenoid position
Ⓒ Port size (*1) (*2)
Ⓓ Electrical connections
Ⓔ Reduced wiring connection
For circuit diagrams (solenoid valve interior), refer to page 970.
Ⓕ Terminal/connector pin Array method
Ⓖ Option
Ⓗ Mount Type
Ⓘ Station No.
Ⓙ Voltage

Precautions for model selection

Be sure to fill in the "Manifold specifications sheet".

*1: Ports A and B plug specifications (*NC/*NO) are available for 2-position single only. Specify the port P/R bore size in the supply and exhaust block section.
2: CL push-in L fitting (upward) is available for the single and double types only. Long elbow is for port A and short elbow for port B. Ports A and B are the same size in the push-in L fitting (upward) mix (CX). If CL* NC/NO is selected, the fitting is a short elbow.
*3: Blank.....The wiring will be based on the type of valve mounted.
W.....All wired as double solenoid regardless of the type of valve used. It is not necessary to select W if no single solenoid is used.
*4: Manual override of non-locking (M) and manual override with OFF function (M7) cannot be selected together.
*5: Check valve (H) is not available for 3-position all ports closed and PAB connection. Refer to page 1105 for details on the check valve.
*6: A filter is built into port P.
*7: Specify the I/O type (sink/source) of I/O block and the power supply (device unit common/external) on the manifold specifications sheet on pages 1100 and 1101.
*8: Specify the spacer mounting position and quantity in manifold specifications sheet.
Stacking of spacers is not possible.
Combination with the masking plate is not supported.
For details, refer to page 1057.
*9: Not available when the fitting for port A/B is elbow.
*10: Not compatible with combination with external pilot (K).
*11: Serial transmission is not available with 100 VAC and 12 VDC.

Code	Description		Ⓐ Model No. Manifold MW3GB2	Manifold MW4GB2	Discrete valve block with solenoid valve NW3GB2	Discrete valve block with solenoid valve NW4GB2	Discrete valve W3GB2	Discrete valve W4GB2
Ⓑ Solenoid position								
1	2 position single			●		●		●
2	2-position double			●		●		●
3	3-position all ports closed			●		●		●
4	3-position ABR connection			●		●		●
5	3-position PAB connection			●		●		●
66	Two 3-port valves integrated (*10)	A side valve: Normally closed B side valve: Normally closed	●		●		●	
8	Mix manifold (when there are multiple solenoid positions)		●	●				
Ⓒ Port size (port A/B)								
C4	ø4 push-in fitting		●	●	●	●		
C6	ø6 push-in fitting		●	●	●	●		
C8	ø8 push-in fitting		●	●	●	●		
CL6	ø6 push-in L-fitting (upward)		●	●	●	●		
CL8	ø8 push-in L-fitting (upward)		●	●	●	●		
CX	Push-in fitting mix		●	●				
Single side plug	Port A	Port B						
C4NC	ø4 push-in fitting	Plug	●	●	●	●		
C6NC	ø6 push-in fitting	Plug	●	●	●	●		
C8NC	ø8 push-in fitting	Plug	●	●	●	●		
C4NO	Plug	ø4 push-in fitting	●	●	●	●		
C6NO	Plug	ø6 push-in fitting	●	●	●	●		
C8NO	Plug	ø8 push-in fitting	●	●	●	●		
CL6NC	ø6 push-in L-fitting (upward)	Plug	●	●	●	●		
CL8NC	ø8 push-in L-fitting (upward)	Plug	●	●	●	●		
CL6NO	Plug	ø6 push-in L-fitting (upward)	●	●	●	●		
CL8NO	Plug	ø8 push-in L-fitting (upward)	●	●	●	●		
Ⓓ Electrical connections								
Blank	DC connector relay board specifications				●	●		
Ⓔ Reduced wiring (lamp and surge suppressor provided as standard)								
Refer to the next page for reduced wiring.								
Ⓕ Terminal/connector pin array								
Blank	Standard wiring	(*3)	●	●	●	●		
W	Double wiring	(*3)	●	●	●	●		
Ⓖ Option								
Blank	No option		●	●	●	●	●	●
M	Manual override of non-locking	(*4)	●	●	●	●	●	●
M7	Manual device with OFF function	(*4)	●	●	●	●	●	●
H	With check valve	(*5)	●	●	●	●	●	●
K	External pilot		●	●				
A	Ozone/coolant proof product		●	●	●	●	●	●
F	Port A/B filter built in	(*6)	●	●	●	●		
Y**	I/O block (In **, enter the number of the desired I/O block combination from Table 1 [I/O block combination table].)	(*7)	●	●				
Z1	Air supply spacer	(*8)	●	●				
Z3	Exhaust spacer	(*8)	●	●				
Z6	Spacer pilot check valve	(*8)(*9)	●	●				
Z8	Individual air supply compatible spacer with in-stop valve spacer	(*8)(*9)(*10)	●	●				
Ⓗ Mount type								
Blank	Direct mount		●	●				
D	DIN rail mount		●	●				
Ⓘ Station No.								
2 to 16	2 stations to 16 stations	(Differs depending on the reduced wiring specifications. Refer to the individual specifications (page 1010).)	●	●				
Ⓙ Voltage								
3	24 VDC	(*11)	●	●	●	●	●	●

indicates not available.

[Reduced wiring list]

Ⓐ Model No.			Manifold		Discrete valve block with solenoid valve		Discrete valve	
			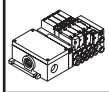					
			MW3GB2	MW4GB2	NW3GB2	NW4GB2	W3GB2	W4GB2
Ⓔ Reduced wiring (lamp and surge suppressor provided as standard)								
T7EC1	Thin EtherCAT	16 point output(NPN valve output)	●	●				
T7ECP1		16 point output(PNP valve output)	●	●				
T7EC2		32 point output(NPN valve output)	●	●				
T7ECP2		32 point output(PNP valve output)	●	●				
T7ECB7		16/16-point I/O (NPN valve output)	●	●				
T7ECPB7		16/16-point I/O (PNP valve output)	●	●				
T7EN1	Thin EtherNet/IP	16-point output (NPN valve output)	●	●				
T7ENP1		16-point output (PNP valve output)	●	●				
T7EN2		32-point output (NPN valve output)	●	●				
T7ENP2		32-point output (PNP valve output)	●	●				
T7ENB7		16/16-point I/O (NPN valve output)	●	●				
T7ENPB7		16/16-point I/O (PNP valve output)	●	●				
T7EB1	Thin CC-Link IEF Basic	16-point output (NPN valve output)	●	●				
T7EBP1		16-point output (PNP valve output)	●	●				
T7EB2		32-point output (NPN valve output)	●	●				
T7EBP2		32-point output (PNP valve output)	●	●				
T7EBB7		16/16-point I/O (NPN valve output)	●	●				
T7EBPB7		16/16-point I/O (PNP valve output)	●	●				
T7EP1	Thin PROFINET	16-point output (NPN valve output)	●	●				
T7EPP1		16-point output (PNP valve output)	●	●				
T7EP2		32-point output (NPN valve output)	●	●				
T7EPP2		32-point output (PNP valve output)	●	●				
T7EPB7		16/16-point I/O (NPN valve output)	●	●				
T7EPPB7		16/16-point I/O (PNP valve output)	●	●				
T8G1	CC-Link	16 point output	●	●				
T8G2		32 point output	●	●				
T8G7		16 point input/16 point output	●	●				
T8D1	DeviceNet	16 point output	●	●				
T8D2		32 point output	●	●				
T8D7		16 point input/16 point output	●	●				

Table 1 [I/O block combination table]

T7

Code	Layout of I/O blocks and station No.						Wiring block side
Y10						IN	
Y20					IN	IN	
Y30				IN	IN	IN	
Y40			IN	IN	IN	IN	
Y11					OUT	IN	
Y21				OUT	IN	IN	
Y31			OUT	IN	IN	IN	
Y41		OUT	IN	IN	IN	IN	
Y12				OUT	OUT	IN	
Y22			OUT	OUT	IN	IN	
Y32		OUT	OUT	IN	IN	IN	
Y42	OUT	OUT	IN	IN	IN	IN	

*1 : How to read the table
Example) Y11 is a combination of one input block (4 points) and one output block (4 points).
2: For details, refer to page 1081 “I/O point numbers corresponding to I/O No. of wiring method T8”.

T8

Code	Layout of I/O blocks and station No.						Wiring block side
Y10						IN	
Y20					IN	IN	
Y30				IN	IN	IN	
Y40			IN	IN	IN	IN	
Y01						OUT	
Y02					OUT	OUT	
Y03				OUT	OUT	OUT	
Y04			OUT	OUT	OUT	OUT	
Y11					OUT	IN	
Y21				OUT	IN	IN	
Y31			OUT	IN	IN	IN	
Y41		OUT	IN	IN	IN	IN	
Y12				OUT	OUT	IN	
Y22			OUT	OUT	IN	IN	
Y32		OUT	OUT	IN	IN	IN	
Y42	OUT	OUT	IN	IN	IN	IN	

Ozone-proof specifications • Coolant proof specifications

Select option “A” of Item Ⓖ in How to order on pages 1014, 1016, 1018 and 1020.

Specifications for rechargeable battery (Catalog No. CC-1226A)

● For use in the rechargeable battery manufacturing process, materials used for all parts are limited

** – Voltage – **P40**

CE marking specifications

** – Voltage – **ST**

- Standard voltage of 24 VDC or less is CE marking-compatible even if the model No. is not indicated with "ST".
- T8G1, T8G2, and T8G7 are not CE marking.

How to order

Serial transmission

● Manifold model No.

MW4GZ2 **1** 0- **C8** – **T8G1** **W** **H** — **5** - **3**

● 3-port manifold model No.

MW3GZ2 **66** 0- **C8** – **T8G1** **W** **H** **D** - **5** - **3**

● Discrete valve block with solenoid valve

NW4GZ2 **1** 0- **C8** - ○ **W** **H** — **3**

● Discrete valve block with 3-port solenoid valve

NW3GZ2 **66** 0- **C8** - ○ **W** **H** — **3**

● Single valve for mounting base(*1)

W4GB2 **1** 9- **00** — **H** — **3**

● 3-port discrete valve for mounting base(*1)

W3GB2 **66** 9- **00** — **H** — **3**

Ⓐ Model No.
Ⓑ Solenoid position
Ⓒ Port size (*2) (*3)
Ⓓ Electrical connections
Ⓔ Reduced wiring connection
For circuit diagrams (solenoid valve interior), refer to page 970.
Ⓕ Terminal/connector pin Array method
Ⓖ Option
Ⓗ Mount Type
Ⓘ Station No.
Ⓙ Voltage

Code	Description		Ⓐ Model No. Manifold MW3GZ2	Manifold MW4GZ2	Discrete valve block with solenoid valve NW3GZ2	Discrete valve block with solenoid valve NW4GZ2	Discrete valve W3GB2	Discrete valve W4GB2
Ⓑ Solenoid position								
1	2 position single			●		●		●
2	2-position double			●		●		●
3	3-position all ports closed			●		●		●
4	3-position ABR connection			●		●		●
5	3-position PAB connection			●		●		●
66	Two 3-port valves Integrated (*11)	A side valve: Normally closed	●		●		●	●
		B side valve: Normally closed						
8	Mix manifold (when there are multiple solenoid positions)		●	●				
Ⓒ Port size (port A/B)								
C4	ø4 push-in fitting		●	●	●	●		
C6	ø6 push-in fitting		●	●	●	●		
C8	ø8 push-in fitting		●	●	●	●		
CX	Push-in fitting mix		●	●				
Single side plug	Port A	Port B						
C4NC	ø4 push-in fitting	Plug	●	●	●	●		
C6NC	ø6 push-in fitting		●	●	●	●		
C8NC	ø8 push-in fitting		●	●	●	●		
C4NO	Plug	ø4 push-in fitting	●	●	●	●		
C6NO		ø6 push-in fitting	●	●	●	●		
C8NO		ø8 push-in fitting	●	●	●	●		
Ⓓ Electrical connections								
Blank	DC connector relay board specifications				●	●		
Ⓔ Reduced wiring (lamp and surge suppressor provided as standard)								
Refer to the next page for reduced wiring.								
Ⓕ Terminal/connector pin array								
Blank	Standard wiring (*4)		●	●	●	●		
W	Double wiring (*4)		●	●	●	●		
Ⓖ Option								
Blank	No option		●	●	●	●	●	●
M	Manual override of non-locking (*5)		●	●	●	●	●	●
M7	Manual device with OFF function (*5)		●	●	●	●	●	●
H	With check valve (*6)		●	●	●	●	●	●
K	External pilot		●	●				
A	Ozone/coolant proof product		●	●	●	●	●	●
F	Port A/B filter built in (*7)		●	●	●	●		
Y**	I/O block (*8) (In **, enter the number of the desired I/O block combination from Table 1 [I/O block combination table].)		●	●				
Z1	Air supply spacer (*9)		●	●				
Z3	Exhaust spacer (*9)		●	●				
Z6	Spacer pilot check valve (*9)(*10)		●	●				
Z8	Individual air supply compatible spacer with in-stop valve spacer (*9)(*10)(*11)		●	●				
Ⓗ Mount type								
Blank	Direct mount		●	●				
D	DIN rail mount		●					
Ⓘ Station No.								
2 to 16	2 stations to 16 stations (Differs depending on the reduced wiring specifications. Refer to the individual specifications (page 1010).)		●	●				
Ⓙ Voltage								
3	24 VDC (*12)		●	●	●	●	●	●

indicates not available.

⚠ Precautions for model selection

Be sure to fill in the "Manifold specifications sheet".

*1: Discrete valve block with solenoid valve The W4GB2*9 discrete solenoid valve is used for the NW4GZ2.

*2: Ports A and B plug specifications (*NC/*NO) are available for 2-position single only. Specify the port P/R bore size in the supply and exhaust block section.

3: CL push-in L fitting (upward) is available for the single and double types only. Long elbow is for port A and short elbow for port B. Ports A and B are the same size in the push-in L fitting (upward) mix (CX).
If CL* NC/NO is selected, the fitting is a short elbow.

*4: Blank……The wiring will be based on the type of valve mounted.
W……All wired as double solenoid regardless of the type of valve used. It is not necessary to select W if no single solenoid is used.

*5: Manual override of non-locking (M) and manual override with OFF function (M7) cannot be selected together.

*6: Check valve (H) is not available for 3-position all ports closed and PAB connection. Refer to page 1105 for details on the check valve.

*7: A filter is built into port P.

*8: Specify the I/O type (sink/source) of I/O block and the power supply (device unit common/external) on the manifold specifications sheet on pages 1100 and 1101.

*9: Specify the spacer mounting position and quantity in manifold specifications sheet.
Stacking of spacers is not possible.
Combination with the masking plate is not supported.
For details, refer to page 1057.

*10: Not available when the fitting for port A/B is elbow.

*11: Not compatible with combination with external pilot (K).

*12: Serial transmission is not available with 100 VAC and 12 VDC.

[Reduced wiring list]

Ⓔ Reduced wiring (lamp and surge suppressor provided as standard)			Ⓐ Model No.					
			Manifold		Discrete valve block with solenoid valve		Discrete valve	
			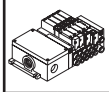					
			MW3GZ2	MW4GZ2	NW3GZ2	NW4GZ2	W3GB2	W4GB2
T7EC1	Thin EtherCAT	16-point output (NPN valve output)	●	●				
T7ECP1		16-point output (PNP valve output)	●	●				
T7EC2		32-point output (NPN valve output)	●	●				
T7ECP2		32-point output (PNP valve output)	●	●				
T7ECB7		16/16-point I/O (NPN valve output)	●	●				
T7ECPB7		16/16-point I/O (PNP valve output)	●	●				
T7EN1	Thin EtherNet/IP	16-point output (NPN valve output)	●	●				
T7ENP1		16-point output (PNP valve output)	●	●				
T7EN2		32-point output (NPN valve output)	●	●				
T7ENP2		32-point output (PNP valve output)	●	●				
T7ENB7		16/16-point I/O (NPN valve output)	●	●				
T7ENPB7		16/16-point I/O (PNP valve output)	●	●				
T7EB1	Thin CC-Link IEF Basic	16-point output (NPN valve output)	●	●				
T7EBP1		16-point output (PNP valve output)	●	●				
T7EB2		32-point output (NPN valve output)	●	●				
T7EBP2		32-point output (PNP valve output)	●	●				
T7EBB7		16/16-point I/O (NPN valve output)	●	●				
T7EBPB7		16/16-point I/O (PNP valve output)	●	●				
T7EP1	Thin PROFINET	16-point output (NPN valve output)	●	●				
T7EPP1		16-point output (PNP valve output)	●	●				
T7EP2		32-point output (NPN valve output)	●	●				
T7EPP2		32-point output (PNP valve output)	●	●				
T7EPB7		16/16-point I/O (NPN valve output)	●	●				
T7EPPB7		16/16-point I/O (PNP valve output)	●	●				
T8G1	CC-Link	16 point output	●	●				
T8G2		32 point output	●	●				
T8G7		16 point input/16 point output	●	●				
T8D1	DeviceNet	16 point output	●	●				
T8D2		32 point output	●	●				
T8D7		16 point input/16 point output	●	●				

Table 1 [I/O block combination table]

T7

Code	Layout of I/O blocks and station No.						Wiring block side
Y10						IN	
Y20					IN	IN	
Y30				IN	IN	IN	
Y40			IN	IN	IN	IN	
Y11					OUT	IN	
Y21				OUT	IN	IN	
Y31			OUT	IN	IN	IN	
Y41		OUT	IN	IN	IN	IN	
Y12				OUT	OUT	IN	
Y22			OUT	OUT	IN	IN	
Y32		OUT	OUT	IN	IN	IN	
Y42	OUT	OUT	IN	IN	IN	IN	

*1 : How to read the table
Example) Y11 is a combination of one input block (4 points) and one output block (4 points).

2: For details, refer to page 1080 "I/O point numbers corresponding to I/O No. of wiring method T8".

T8

Code	Layout of I/O blocks and station No.						Wiring block side
Y10						IN	
Y20					IN	IN	
Y30				IN	IN	IN	
Y40			IN	IN	IN	IN	
Y01						OUT	
Y02					OUT	OUT	
Y03				OUT	OUT	OUT	
Y04			OUT	OUT	OUT	OUT	
Y11					OUT	IN	
Y21				OUT	IN	IN	
Y31			OUT	IN	IN	IN	
Y41		OUT	IN	IN	IN	IN	
Y12				OUT	OUT	IN	
Y22			OUT	OUT	IN	IN	
Y32		OUT	OUT	IN	IN	IN	
Y42	OUT	OUT	IN	IN	IN	IN	

Ozone-proof specifications • Coolant proof specifications

Select option "A" of Item Ⓖ in How to order on pages 1014, 1016 and 1018.

Specifications for rechargeable battery (Catalog No. CC-1226A)

● For use in the rechargeable battery manufacturing process, materials used for all parts are limited

** - Voltage - **P40**

CE marking specifications

** - Voltage - **ST**

- Standard voltage of 24 VDC or less is CE marking-compatible even if the model No. is not indicated with "ST".
- T8G1, T8G2, and T8G7 are not CE marking.

Manifold components explanation and parts list

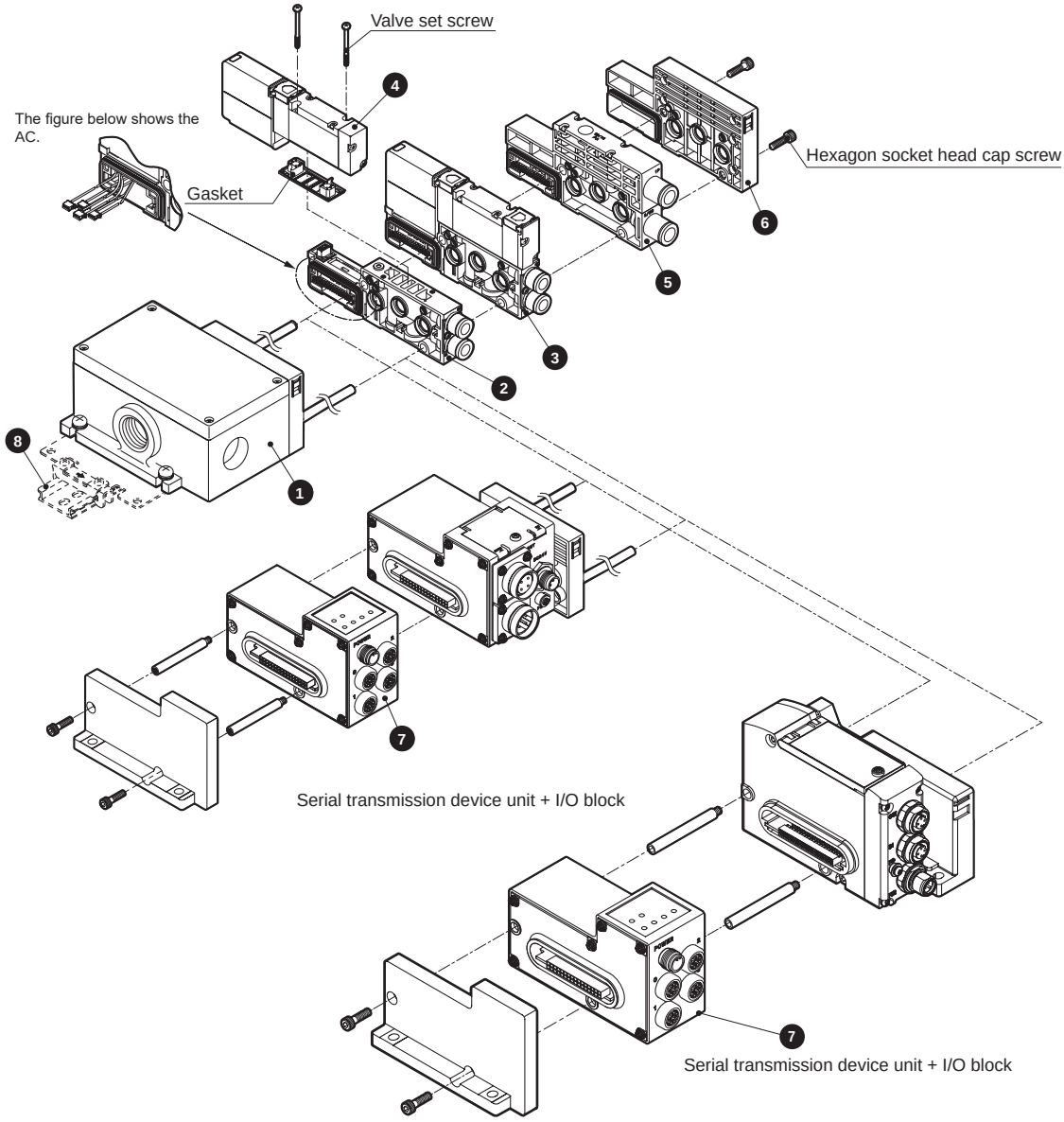

List of main components (refer to pages 1048 to 1063 for details)

No.	Component name	Model No. (example)	No.	Component name	Model No. (example)
1	Wiring block	NW4G2-T10	5	Supply and exhaust block	NW4G2-Q-10
2	Discrete valve block	NW4GB2-V1-C8	6	End block R	NW4G2-ER
3	Discrete valve block with solenoid valve	NW4GB220-C8-H-3	7	I/O block	NW4GB2-IN-N-B
4	Discrete solenoid valve for manifold	W4GB219-00-H-3	8	DIN rail	N4G-BAA (Length)

Reduced wiring weight (for DC)

NW4GB2

Block	Model No.	Weight
Valve block with solenoid valve	NW4GB210-*-*-*	177
	NW4GB220-*-*-*	193
	NW4GB2$^{3}_{5}$0-*-*-*	200
Valve block with masking plate	NW4GB2-MP$^{S}_{D}$-*	113
Wiring block (serial transmission device unit)	NW4GB2-T8*	430
I/O block (serial transmission device unit)	NW4GB2-$^{IN}_{OUT}$-$^{N}_{P}$-$^{K}_{B}$	220
Valve block	NW4GB2-V*-*	83

NW4GZ2

(g)

Block	Model No.	Weight
Valve block with solenoid valve	NW4GZ210-*-*-*	177
	NW4GZ220-*-*-*	192
	NW4GZ2$^{3}_{5}$0-*-*-*	199
Valve block with masking plate	NW4GZ2-MP$^{S}_{D}$-*	112
Wiring block (serial transmission device unit)	NW4GB2-T8*	430
Wiring block (serial transmission device unit)	NW4G2-T7*	280
I/O block (serial transmission device unit)	NW4GB2-IN/OUT-N/P-K/B	220
Valve block	NW4GZ2-V*	82

Common

(g)

Block	Model No.	Weight	Block	Model No.	Weight
Supply and exhaust block	NW4G2-Q-*	137	Wiring block	NW4G2-T10	423
	NW4G2-QK-*	140		NW4G2-T20	490
	NW4G2-QZ-*	137		NW4G2-T30	370
	NW4G2-QKZ-*	143		NW4G2-T5*	367
End block	NW4G2-ER	91	Air supply spacer	W4G2-P(K)-*	60
	NW4G2-EXR	96	Exhaust spacer	W4G2-R-*-*	60
			Spacer pilot check valve	W4G2-PC-M	183
			Individual air supply compatible spacer with in-stop valve spacer	W4G2-PIS-*	115
			DIN rail	N4G-BAA*	0.19/mm

Parts list

● Cartridge push-in fitting

Applicable	Part name	Model No.
Valve	Cartridge fitting ø4 straight	4G2-JOINT-C4
	Cartridge fitting ø6 straight	4G2-JOINT-C6
	Cartridge fitting ø8 straight	4G2-JOINT-C8
	Cartridge fitting ø6 (short) elbow	4G2-JOINT-CL6
	Cartridge fitting ø6 long elbow	4G2-JOINT-CLL6
	Cartridge fitting ø8 (short) elbow	4G2-JOINT-CL8
	Cartridge fitting ø8 long elbow	4G2-JOINT-CLL8
	Plug cartridge	4G2-JOINT-CPG
Supply and exhaust block port P/R	Cartridge fitting ø8 straight	N4G2-Q-JOINT-8
	Cartridge fitting ø10 straight	N4G2-Q-JOINT-10
	Cartridge fitting ø8 (short) elbow	N4G2-Q-JOINT-8L
	Cartridge fitting ø8 long elbow	N4G2-Q-JOINT-8LL
	Cartridge fitting ø10 (short) elbow	N4G2-Q-JOINT-10L
	Cartridge fitting ø10 long elbow	N4G2-Q-JOINT-10LL
	Plug cartridge	N4G2-Q-JOINT-PG
Supply and exhaust block port PA	Cartridge fitting ø6 straight	N4G-QK-JOINT-6
	Cartridge fitting ø6 elbow	N4G-QK-JOINT-6L

Parts kit for T10 wiring block

● Cable clamp

Model No.	Applicable cable O.D.	Description
W4G-SCL-18A	ø14.5 to 16.5	Used to protect cables from dust and jetting water.
W4G-SCL-18B	ø16.5 to 18.5	

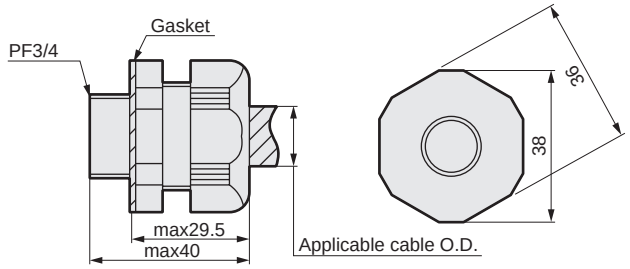

(Reference value)
Body tightening torque 4.0 to 4.5 N·m
Cable clamp tightening torque 3.0 to 3.5 N·m

Parts for I/O block

● Waterproof cap

Model No.	Description
W4G-XSZ-11	Provides jet-proof protection of the power supply connector when the power supply is shared with the serial transmission device unit.

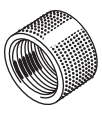

(Reference value)
Tightening torque 0.4 to 0.5 N·m

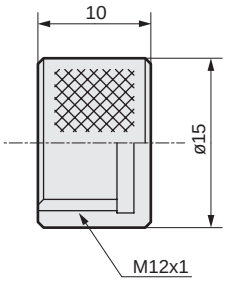

● Waterproof plug

Model No.	Description
W4G-XSZ-12	Provides jet-proof protection of unused signal connectors.



(Reference value)
Tightening torque 0.4 to 0.5 N·m

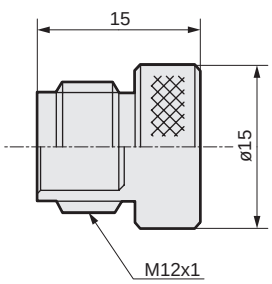

Dimensions CAD

MW4GB2

● Common terminal block (T10)

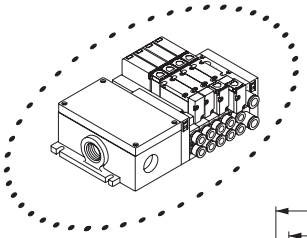

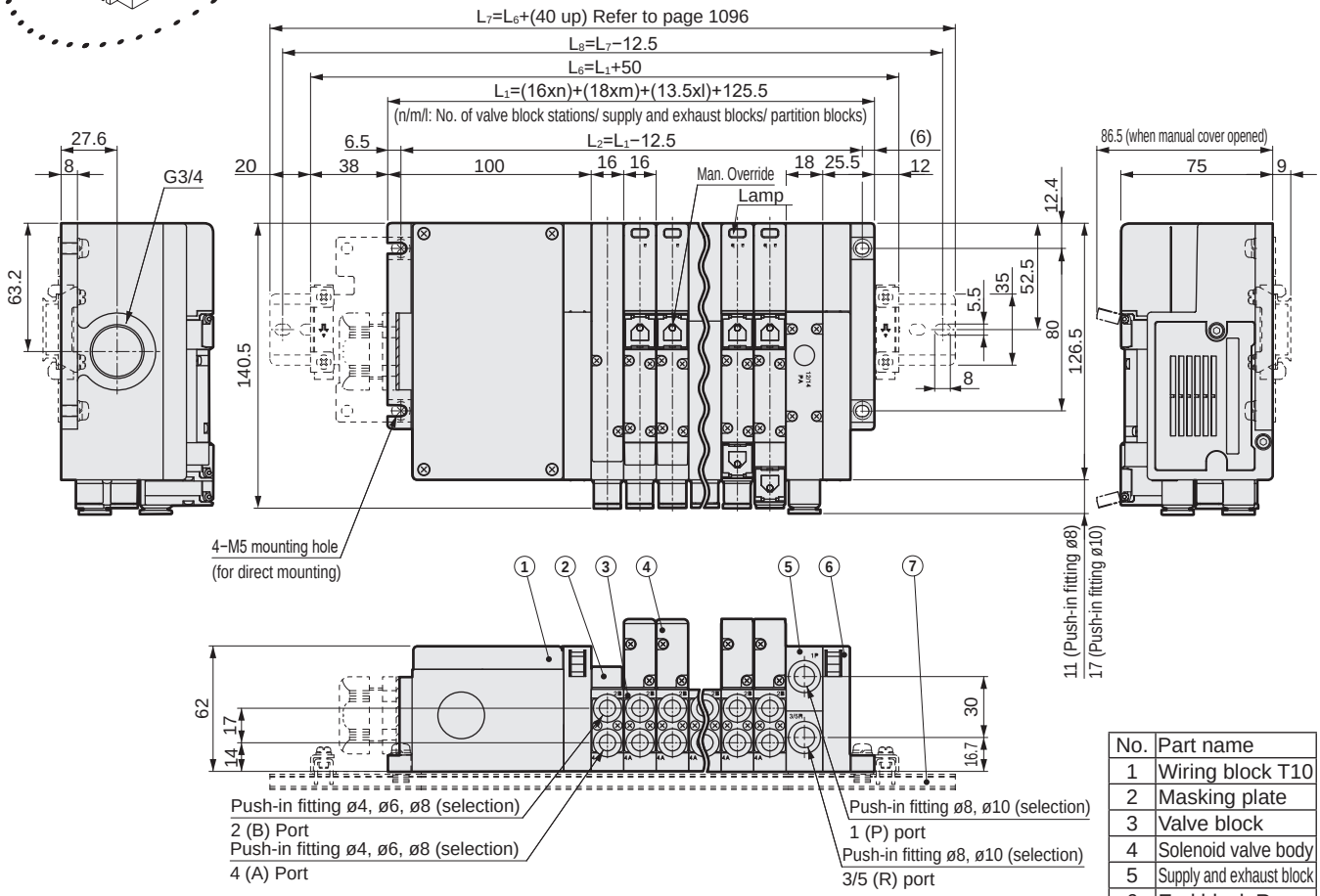

No.	Part name
1	Wiring block T10
2	Masking plate
3	Valve block
4	Solenoid valve body
5	Supply and exhaust block
6	End block R
7	DIN rail

● Push-in L fitting for valve block (upward)
For single solenoid/double solenoid manifolds only.
Port A is a long elbow and port B a short elbow.

● ø6(CL6)

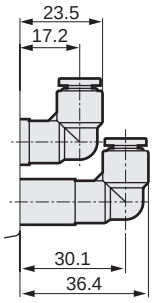

● ø8(CL8)

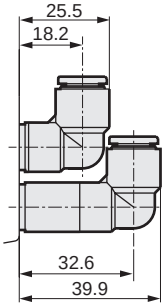

● Push-in L fitting for supply and exhaust block (upward)

● ø8(CL8)

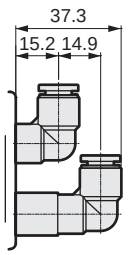

● ø10(CL10)

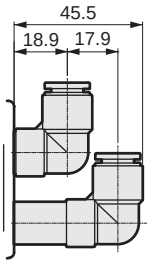

Dimensions CAD

MW4GB2

● Multi-connector (T20)

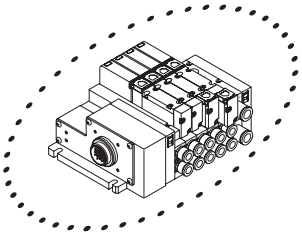

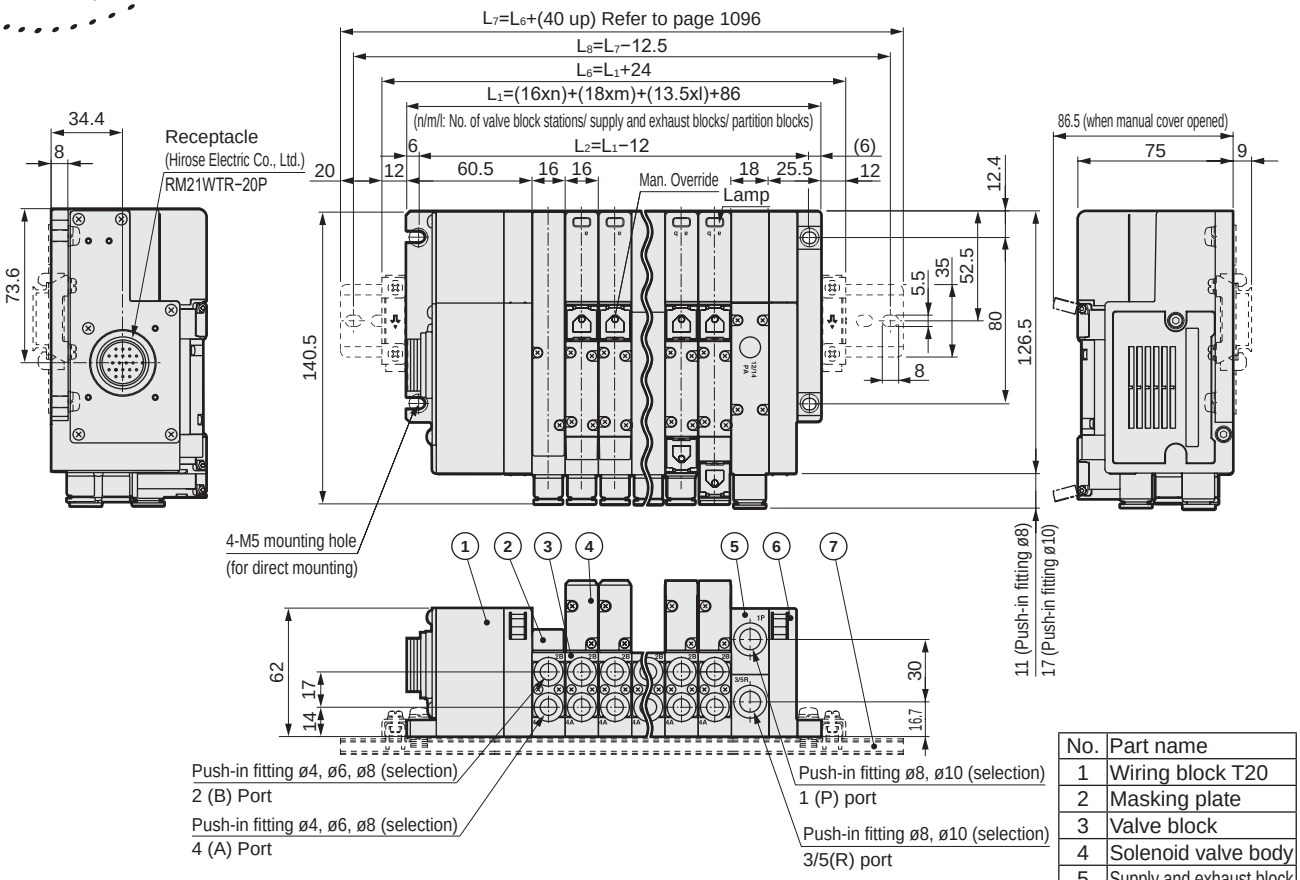

No.	Part name
1	Wiring block T20
2	Masking plate
3	Valve block
4	Solenoid valve body
5	Supply and exhaust block
6	End block R
7	DIN rail

● Push-in L fitting for valve block (upward)
For single solenoid/double solenoid manifolds only.
Port A is a long elbow and port B a short elbow.

● ø6(CL6)

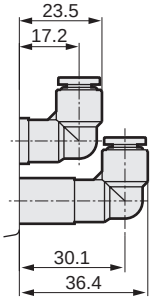

● ø8(CL8)

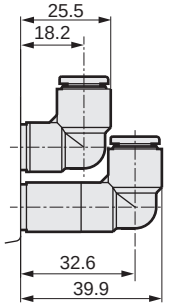

● Push-in L fitting for supply and exhaust block (upward)

● ø8(CL8)

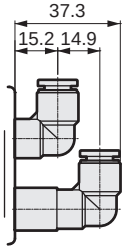

● ø10(CL10)

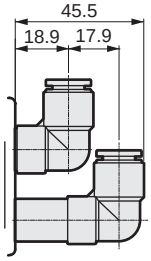

Dimensions CAD

MW4GB2

● D sub-connector (T30)

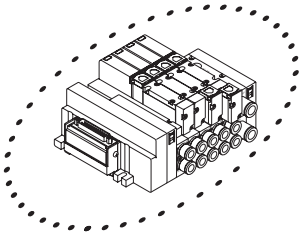

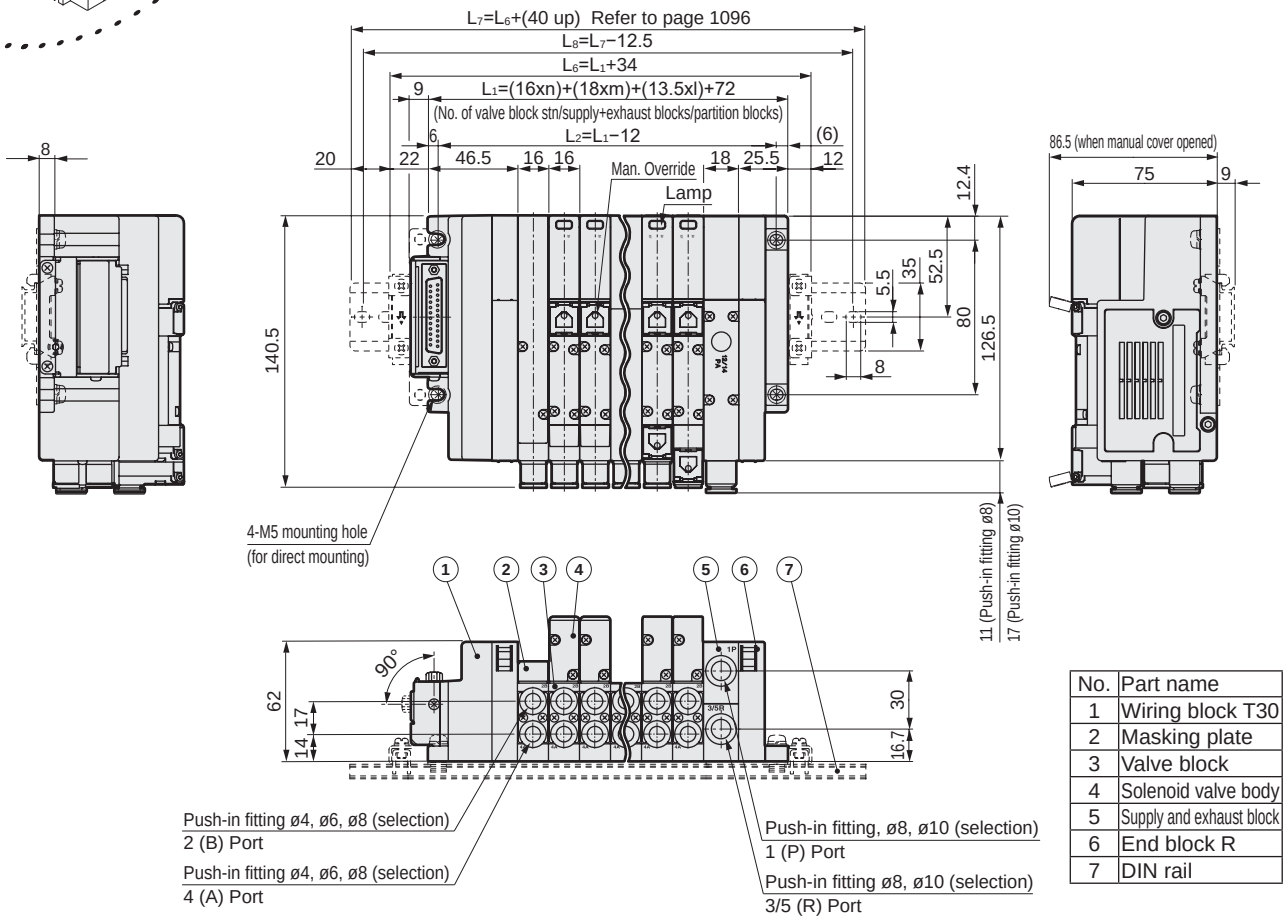

No.	Part name
1	Wiring block T30
2	Masking plate
3	Valve block
4	Solenoid valve body
5	Supply and exhaust block
6	End block R
7	DIN rail

● Push-in L fitting for valve block (upward)
For single solenoid/double solenoid manifolds only.
Port A is a long elbow and port B a short elbow.

● ø6(CL6)

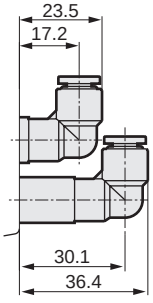

● ø8(CL8)

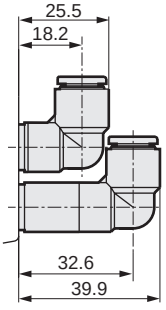

● Push-in L fitting for supply and exhaust block (upward)

● ø8(CL8)

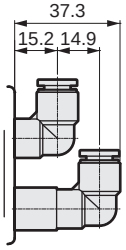

● ø10(CL10)

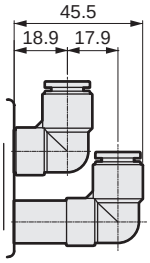

Dimensions CAD

MW4GB2

● Flat cable connector (T5*)

* Figure shows T51.
Flat cable connector has T53.
Dimensions are the same as T51.

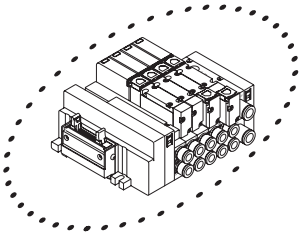

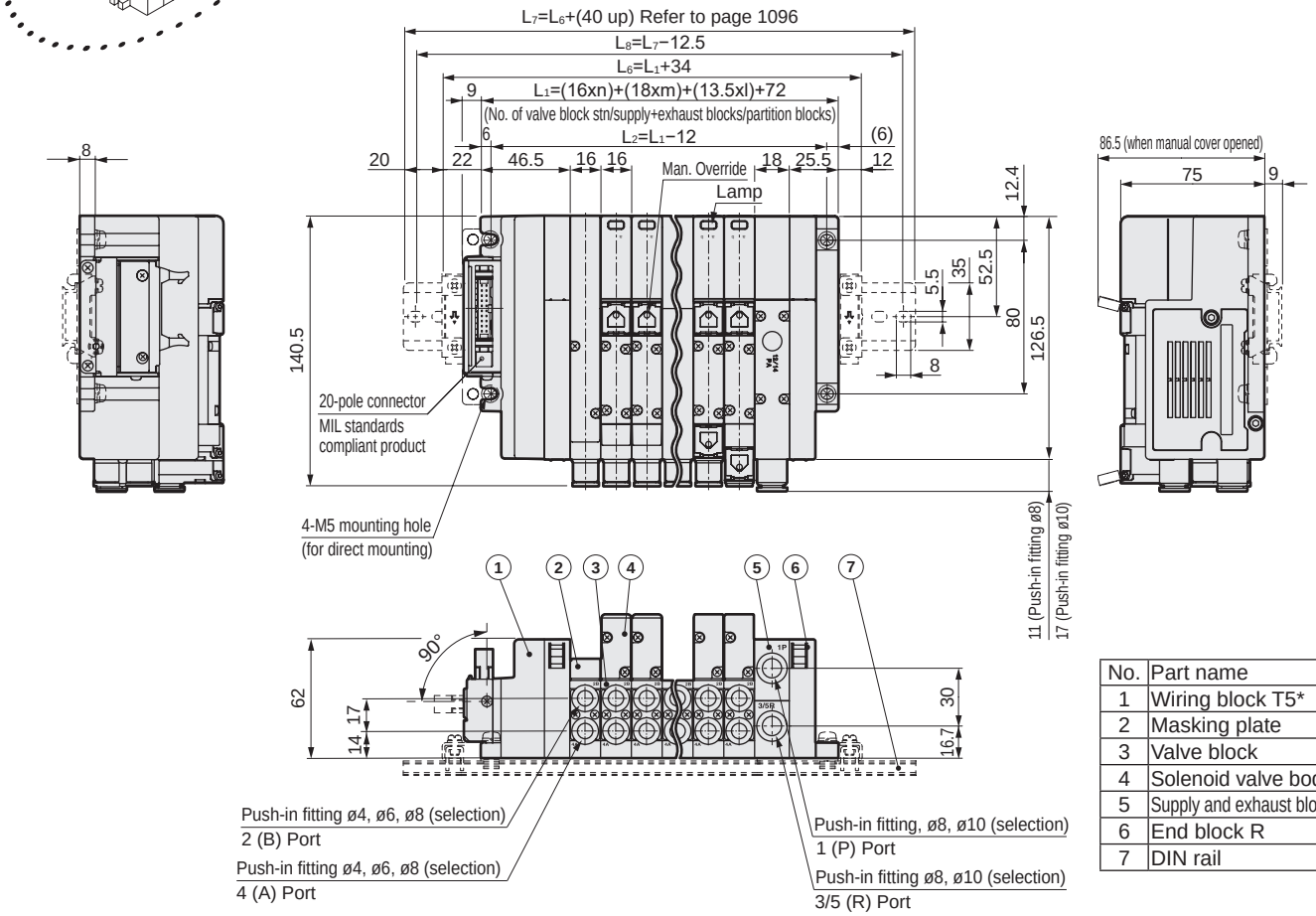

No.	Part name
1	Wiring block T5*
2	Masking plate
3	Valve block
4	Solenoid valve body
5	Supply and exhaust block
6	End block R
7	DIN rail

● Push-in L fitting for valve block (upward)
For single solenoid/double solenoid manifolds only.
Port A is a long elbow and port B a short elbow.

● ø6(CL6)

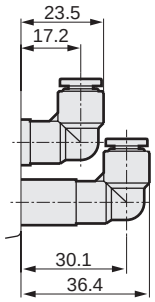

● ø8(CL8)

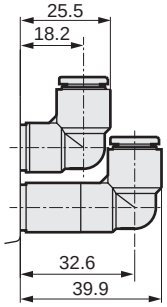

● Push-in L fitting for supply and exhaust block (upward)

● ø8(CL8)

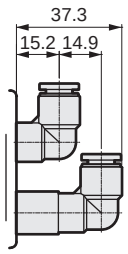

● ø10(CL10)

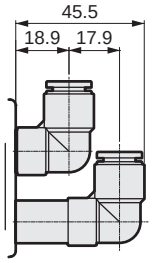

Dimensions CAD

MW4GB2

● Serial transmission (T7 □)

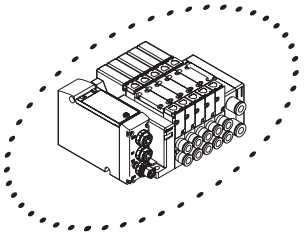

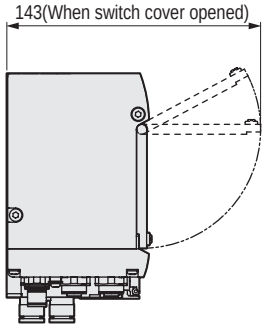

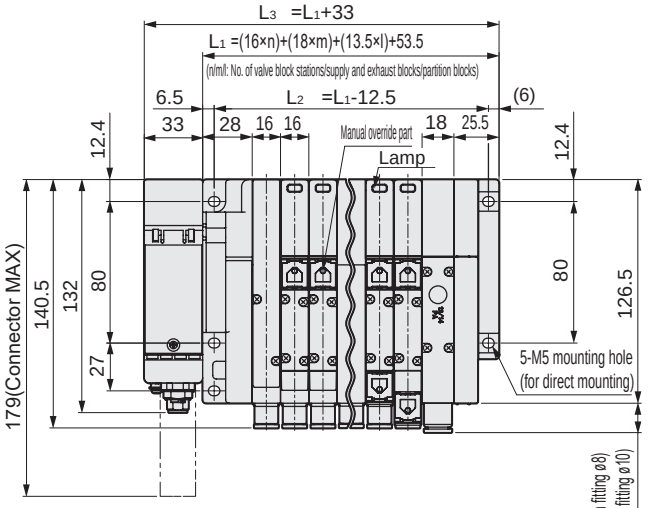

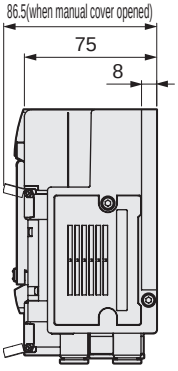

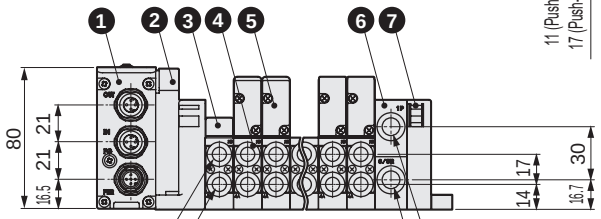

Push-in fitting ø4, ø6, ø8 (selection)
2 (B) port

Push-in fitting ø4, ø6, ø8 (selection)
4 (A) port

Push-in fitting ø8, ø10 (selection)
1 (P) port

Push-in fitting ø8, ø10 (selection)
3/5(R) port

Part No.	Part name
1	Serial transmission device unit W4G-OPP8 Series
2	Wiring block
3	Masking plate
4	Valve block
5	Solenoid valve body
6	Supply and exhaust block
7	End block R

● Push-in L fitting for valve block (upward)
For single solenoid/double solenoid manifolds only.
Port A is a long elbow and port B a short elbow.

● ø6 (CL6)

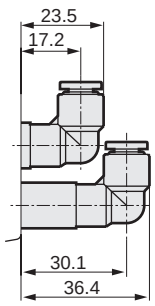

● ø8 (CL8)

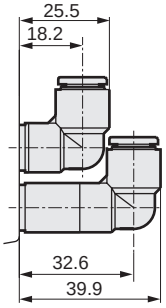

● Push-in L fitting for supply and exhaust block (upward)

● ø8 (CL8)

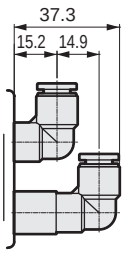

● ø10 (CL10)

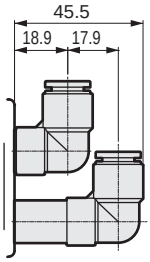

Dimensions CAD

MW4GB2

● Serial transmission (T7□B) with I/O

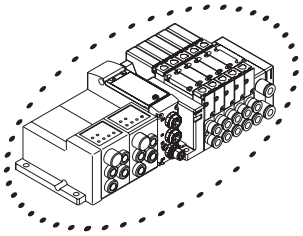

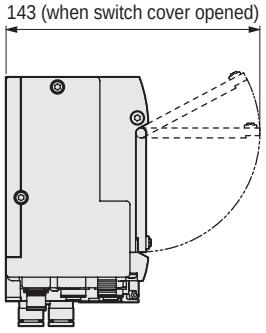

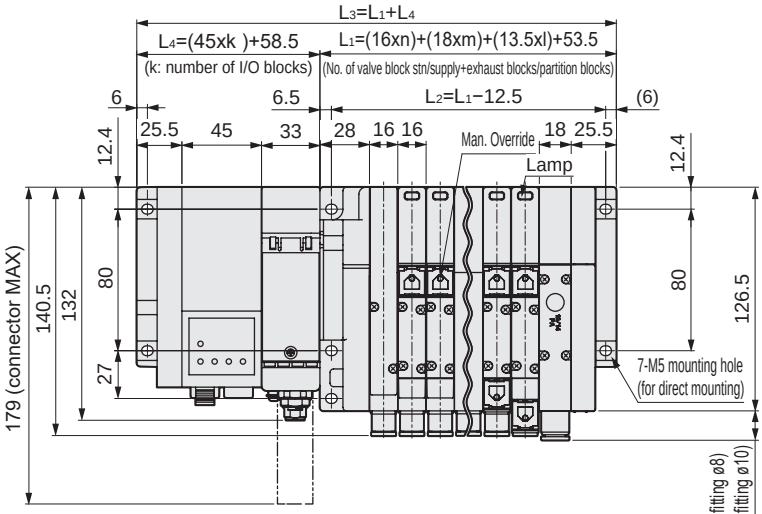

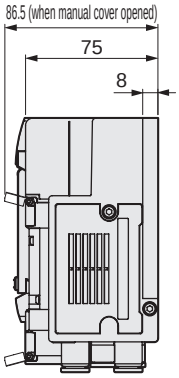

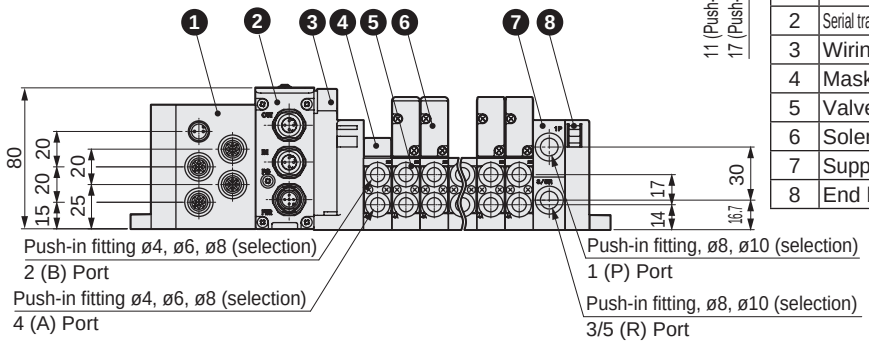

No.	Part name
1	I/O block
2	Serial trans. device unit W4G-OPP8 Series
3	Wiring block
4	Masking plate
5	Valve block
6	Solenoid valve body
7	Supply and exhaust block
8	End block R

● Push-in L fitting for valve block (upward)
For single solenoid/double solenoid manifolds only.
Port A is a long elbow and port B a short elbow.

● ø6(CL6)

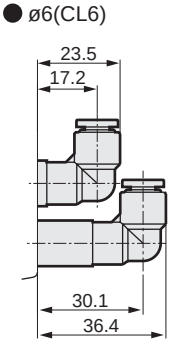

● ø8(CL8)

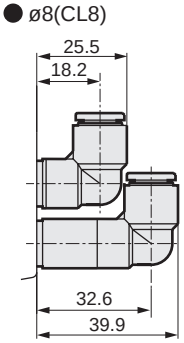

● Push-in L fitting for supply and exhaust block (upward)

● ø8(CL8)

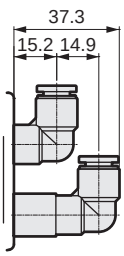

● ø10(CL10)

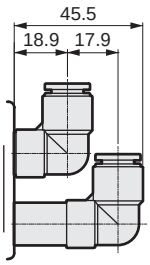

Dimensions CAD

MW4GB2

● Serial transmission CC-Link (T8G*)

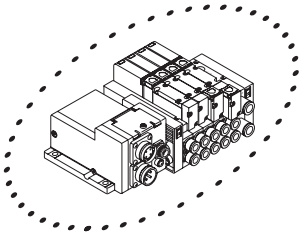

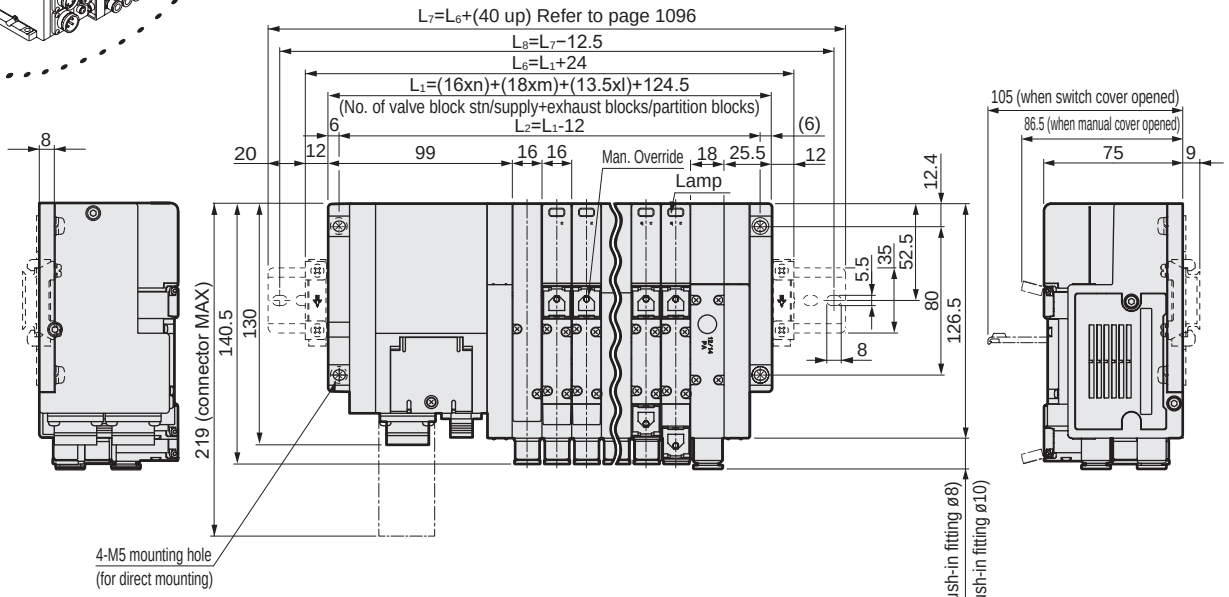

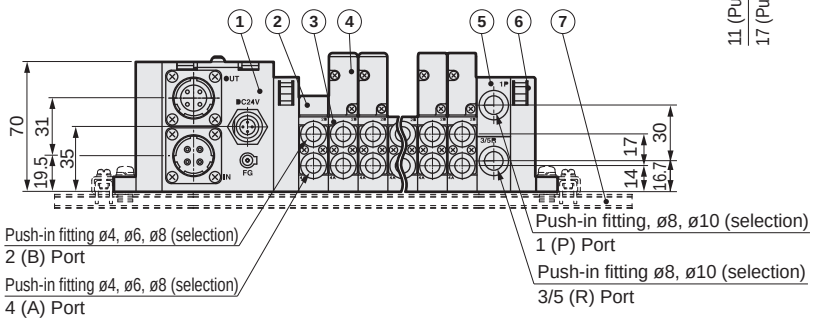

No.	Part name
1	Wiring block T8*
2	Masking plate
3	Valve block
4	Solenoid valve body
5	Supply and exhaust block
6	End block R
7	DIN rail

● Push-in L fitting for valve block (upward)
For single solenoid/double solenoid manifolds only.
Port A is a long elbow and port B a short elbow.

● ø6(CL6)

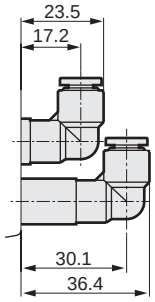

● ø8(CL8)

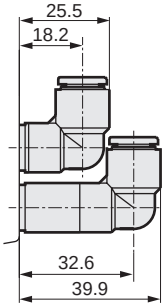

● Push-in L fitting for supply and exhaust block (upward)

● ø8(CL8)

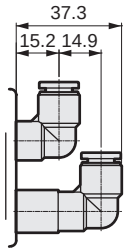

● ø10(CL10)

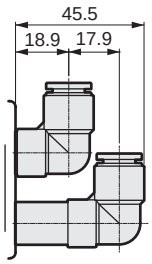

Dimensions CAD

MW4GB2

● Serial transmission CC-Link (T8G*) + I/O block

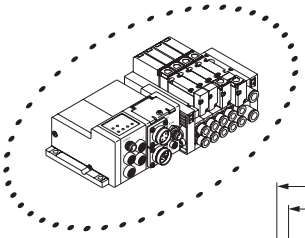

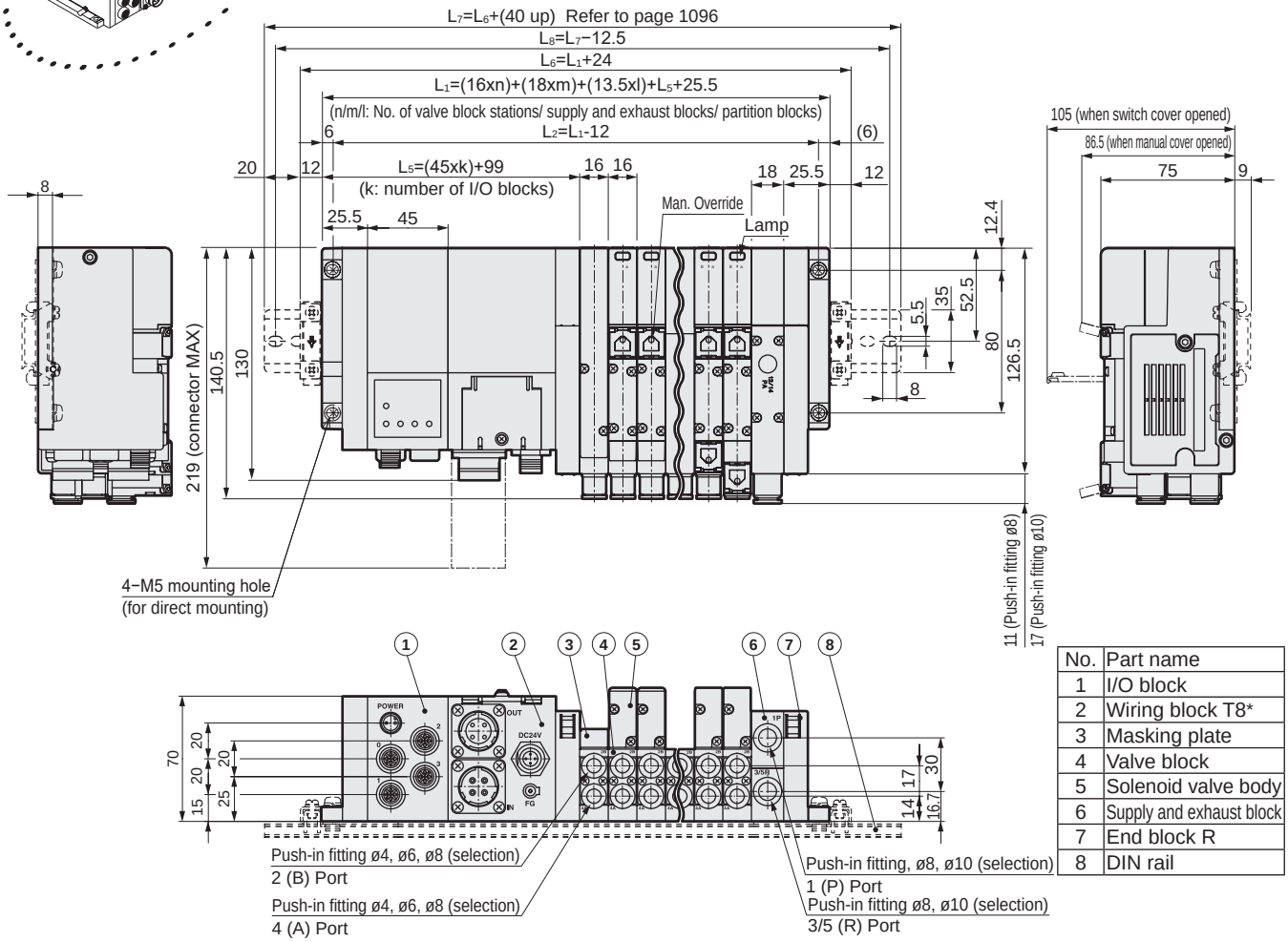

No.	Part name
1	I/O block
2	Wiring block T8*
3	Masking plate
4	Valve block
5	Solenoid valve body
6	Supply and exhaust block
7	End block R
8	DIN rail

● Push-in L fitting for valve block (upward)
For single solenoid/double solenoid manifolds only.
Port A is a long elbow and port B a short elbow.

● ø6(CL6)

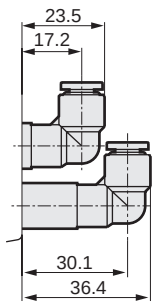

● ø8(CL8)

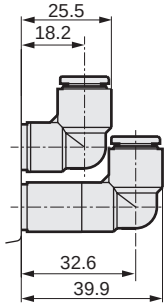

● Push-in L fitting for supply and exhaust block (upward)

● ø8(CL8)

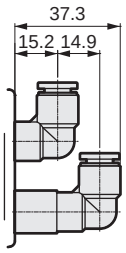

● ø10(CL10)

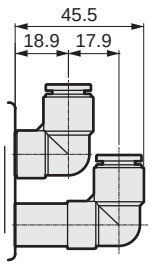

Dimensions CAD

MW4GB2

● Serial transmission DeviceNet (T8D*)

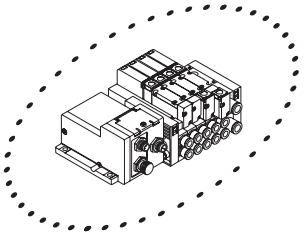

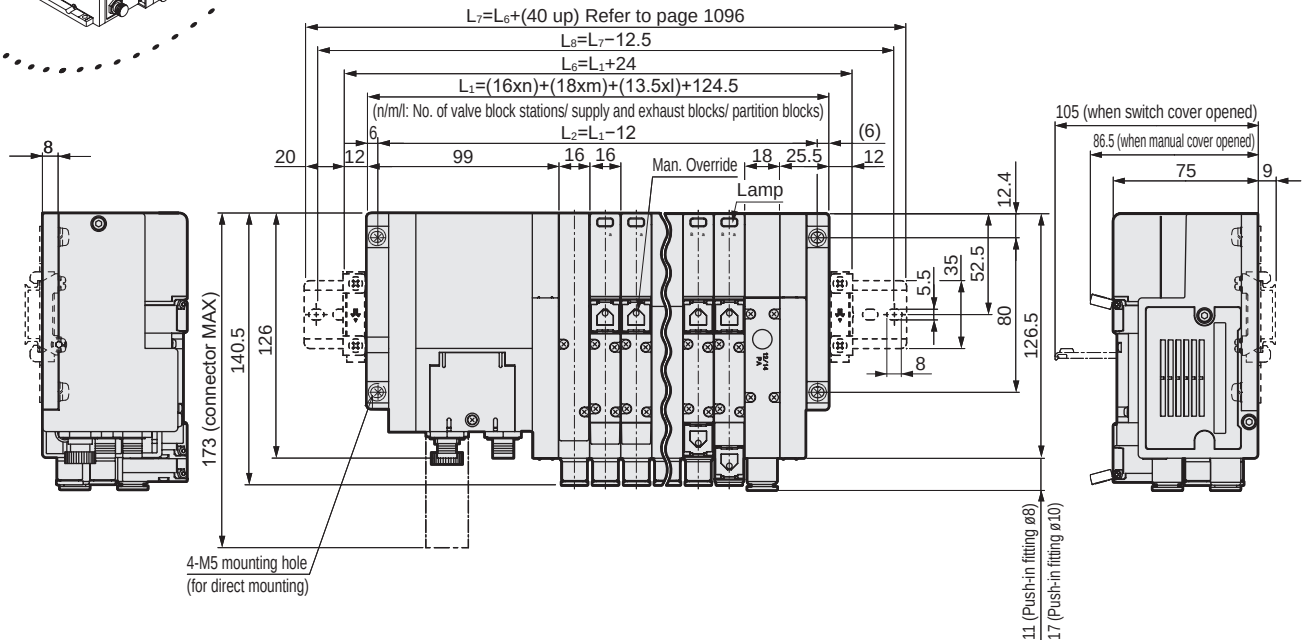

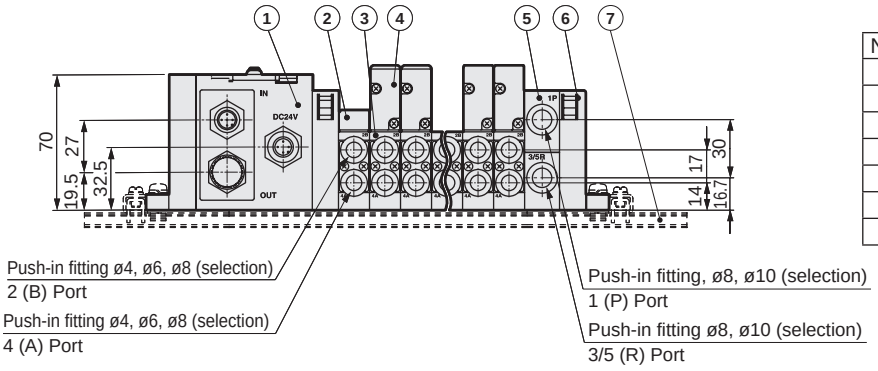

No.	Part name
1	Wiring block T8*
2	Masking plate
3	Valve block
4	Solenoid valve body
5	Supply and exhaust block
6	End block R
7	DIN rail

● Push-in L fitting for valve block (upward)
For single solenoid/double solenoid manifolds only.
Port A is a long elbow and port B a short elbow.

● ø6(CL6)

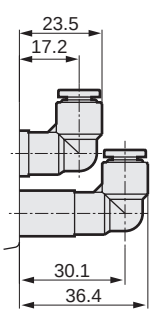

● ø8(CL8)

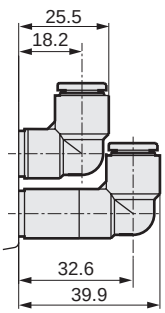

● Push-in L fitting for supply and exhaust block (upward)

● ø8(CL8)

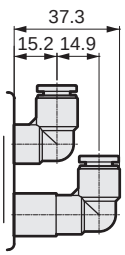

● ø10(CL10)

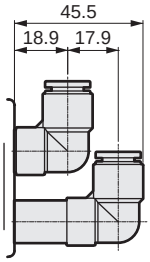

Dimensions CAD

MW4GB2

● Serial transmission DeviceNet (T8D*) + I/O block

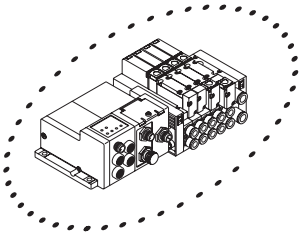

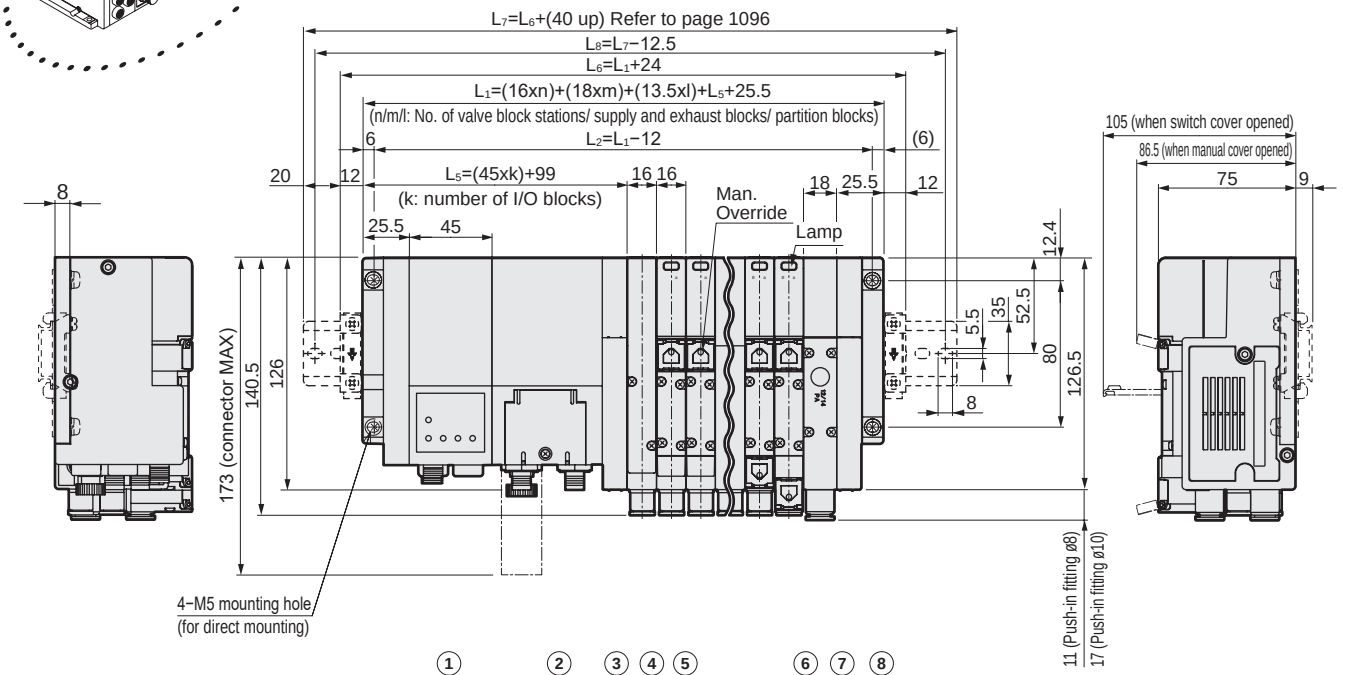

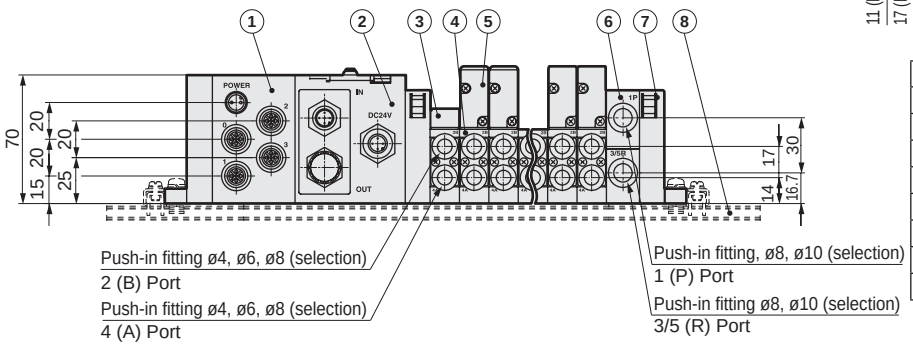

No.	Part name
1	I/O block
2	Wiring block T8*
3	Masking plate
4	Valve block
5	Solenoid valve body
6	Supply and exhaust block
7	End block R
8	DIN rail

● Push-in L fitting for valve block (upward)
For single solenoid/double solenoid manifolds only.
Port A is a long elbow and port B a short elbow.

● ø6(CL6)

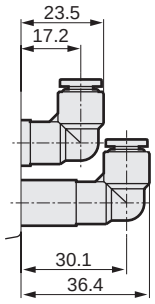

● ø8(CL8)

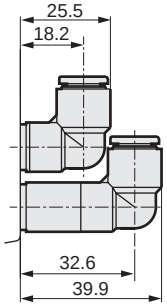

● Push-in L fitting for supply and exhaust block (upward)

● ø8(CL8)

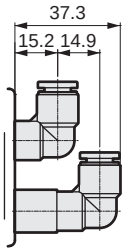

● ø10(CL10)

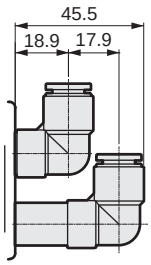

Dimensions CAD

MW4GB2

● Serial transmission CompoBus/S (T8C*)

End of production product

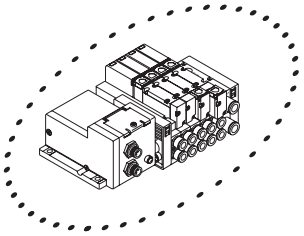

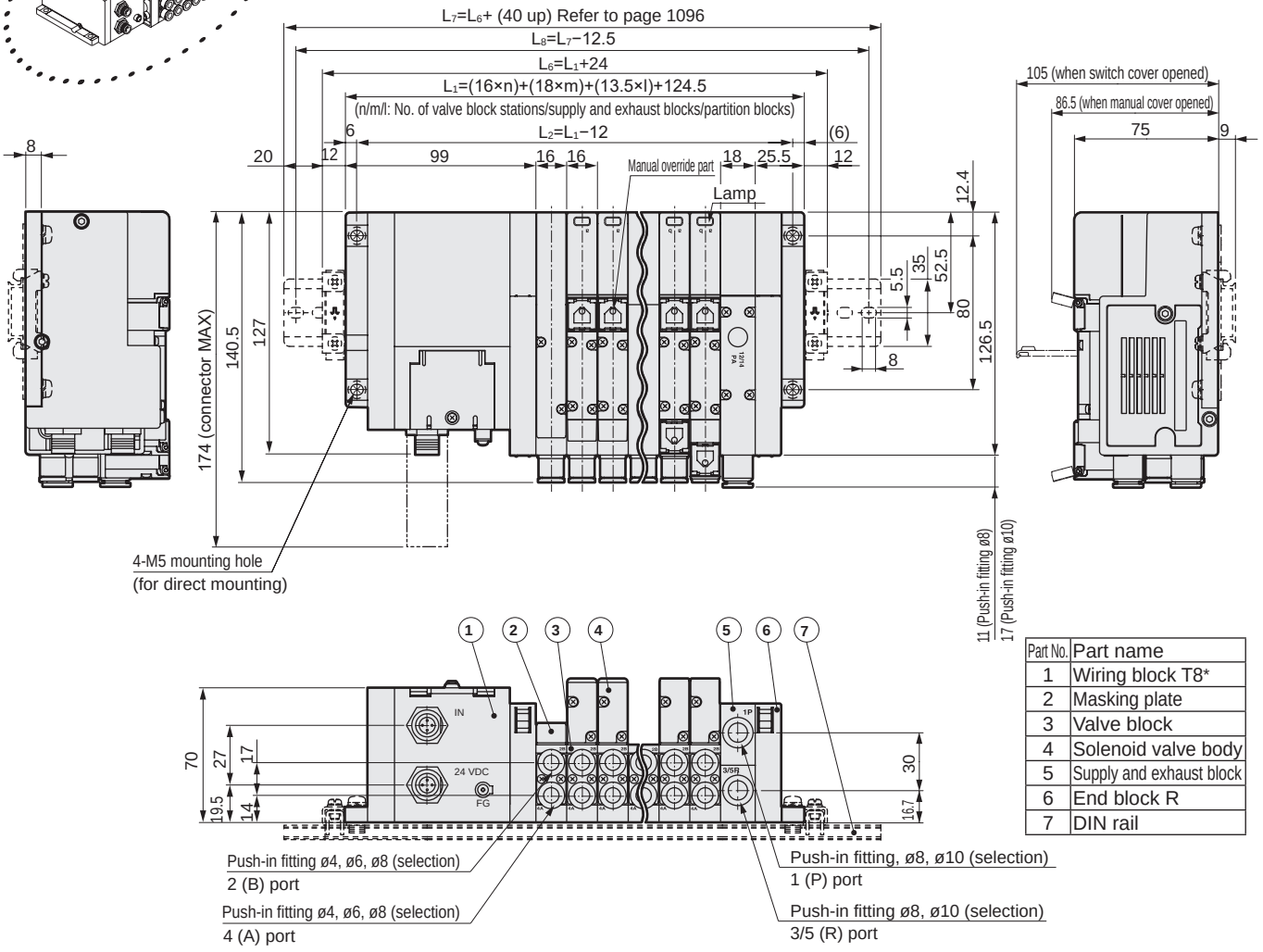

Part No.	Part name
1	Wiring block T8*
2	Masking plate
3	Valve block
4	Solenoid valve body
5	Supply and exhaust block
6	End block R
7	DIN rail

Push-in fitting ø4, ø6, ø8 (selection)
2 (B) port

Push-in fitting ø4, ø6, ø8 (selection)
4 (A) port

Push-in fitting, ø8, ø10 (selection)
1 (P) port

Push-in fitting ø8, ø10 (selection)
3/5 (R) port

● Push-in L fitting for valve block (upward)
For single solenoid/double solenoid manifolds only.
Port A is a long elbow and port B a short elbow.

● ø6 (CL6)

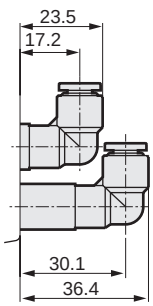

● ø8 (CL8)

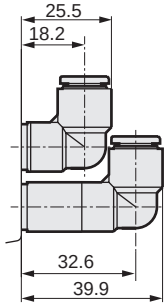

● Push-in L fitting for supply and exhaust block (upward)

● ø8 (CL8)

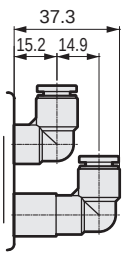

● ø10 (CL10)

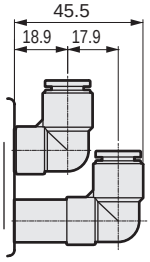

Dimensions CAD

MW4GB2

● Serial transmission CompoBus/S (T8C*) + I/O block

End of production product

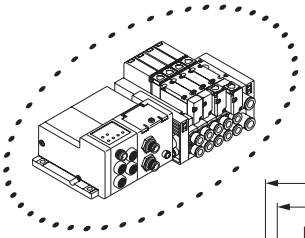

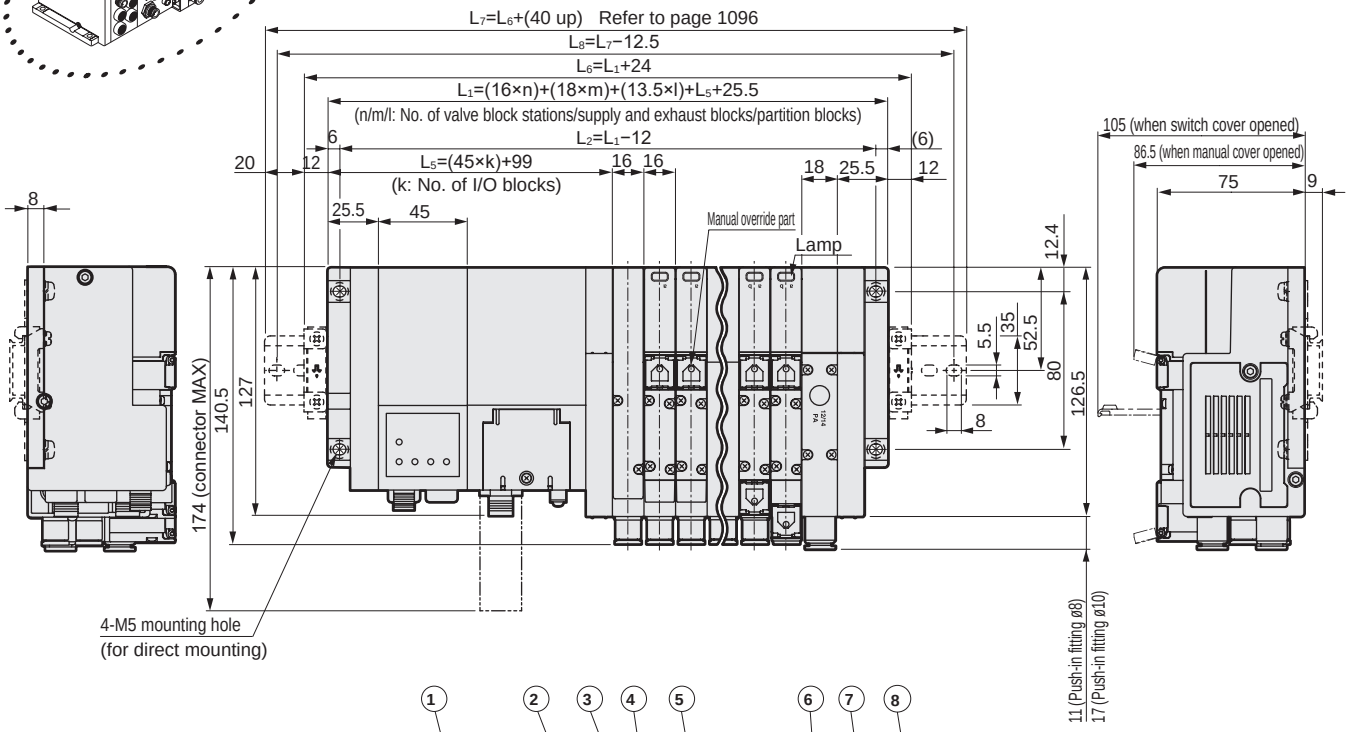

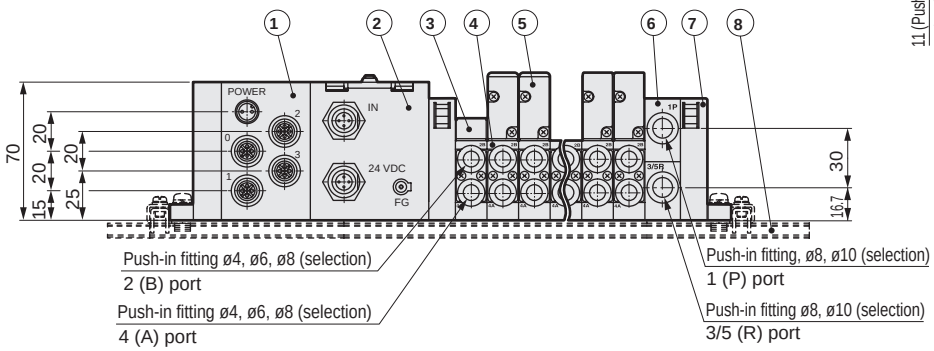

Part No.	Part name
1	I/O block
2	Wiring block T8*
3	Masking plate
4	Valve block
5	Solenoid valve body
6	Supply and exhaust block
7	End block R
8	DIN rail

● Push-in L fitting for valve block (upward)
For single solenoid/double solenoid manifolds only.
Port A is a long elbow and port B a short elbow.

● ø6 (CL6)

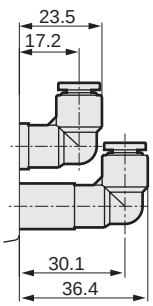

● ø8 (CL8)

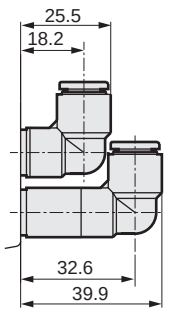

● Push-in L fitting for supply and exhaust block (upward)

● ø8 (CL8)

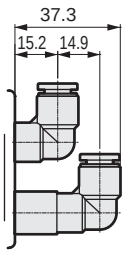

● ø10 (CL10)

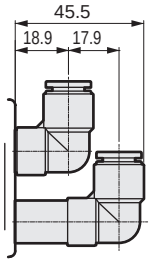

Dimensions CAD

MW4GZ2

● Common terminal block (T10)

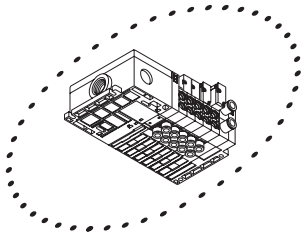

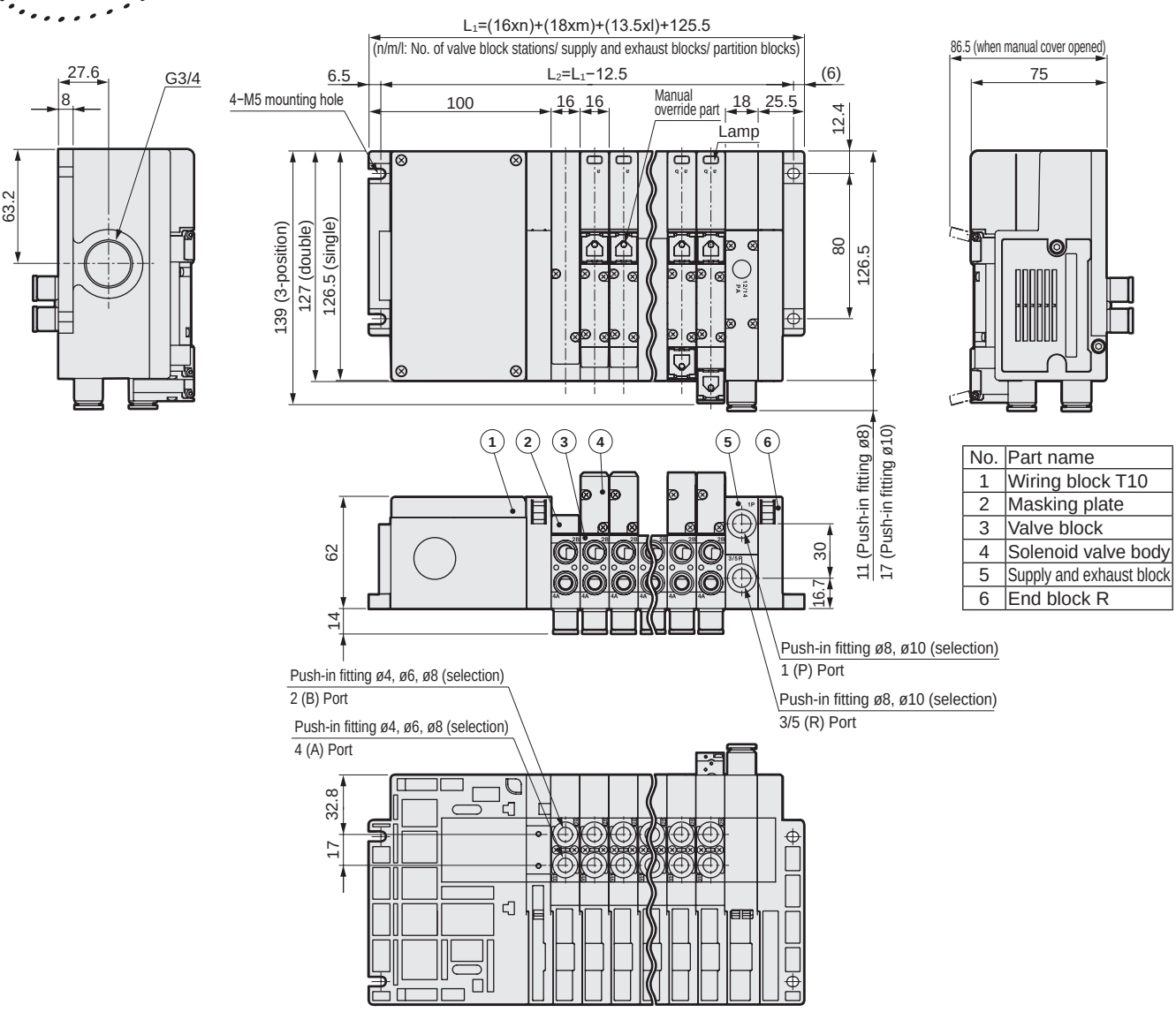

No.	Part name
1	Wiring block T10
2	Masking plate
3	Valve block
4	Solenoid valve body
5	Supply and exhaust block
6	End block R

● Push-in L fitting for supply and exhaust block (upward)

● ø8(CL8)

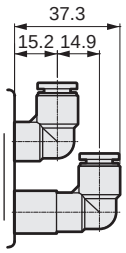

● ø10(CL10)

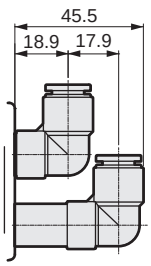

Dimensions CAD

MW4GZ2

● Multi-connector (T20)

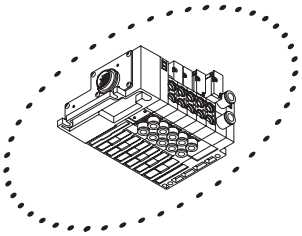

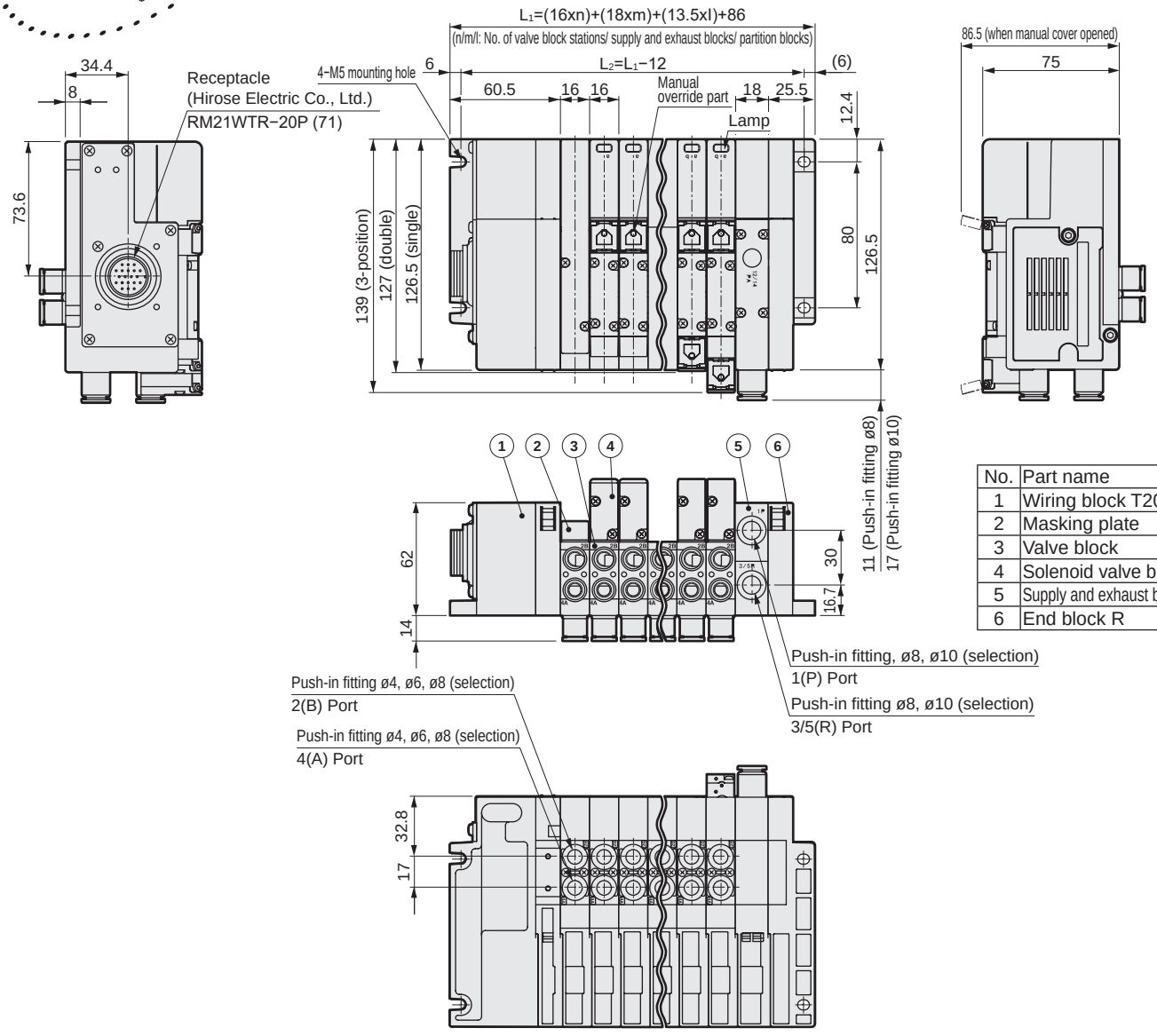

No.	Part name
1	Wiring block T20
2	Masking plate
3	Valve block
4	Solenoid valve body
5	Supply and exhaust block
6	End block R

● Push-in L fitting for supply and exhaust block (upward)

● ø8(CL8)

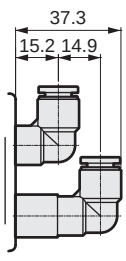

● ø10(CL10)

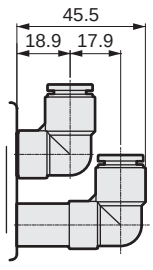

Dimensions CAD

MW4GZ2

● D sub-connector (T30)

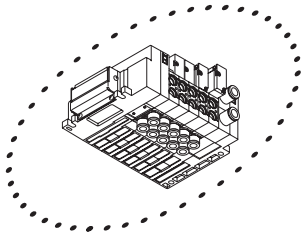

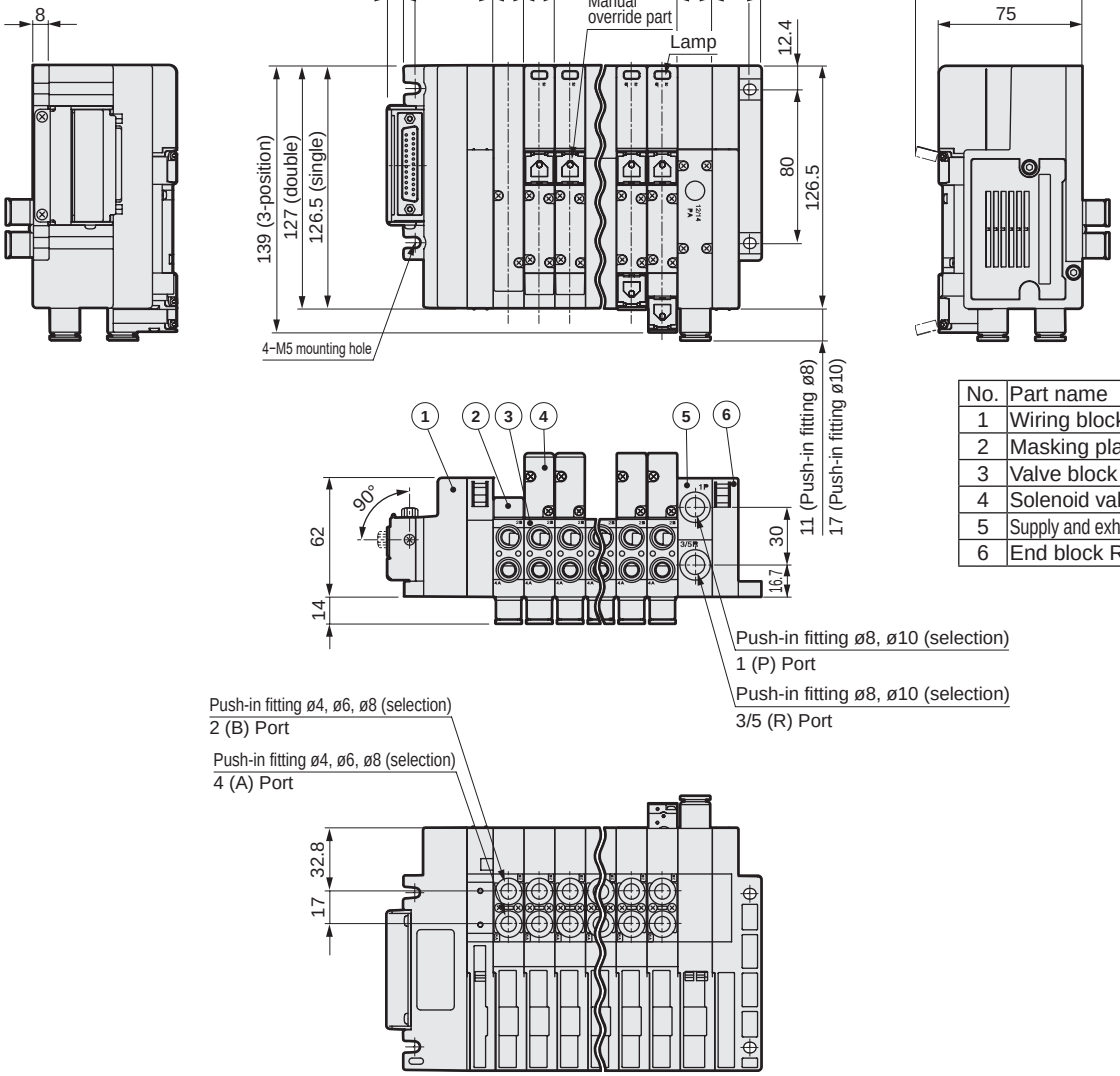

No.	Part name
1	Wiring block T30
2	Masking plate
3	Valve block
4	Solenoid valve body
5	Supply and exhaust block
6	End block R

● Push-in L fitting for supply and exhaust block (upward)

● ø8(CL8)

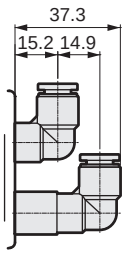

● ø10(CL10)

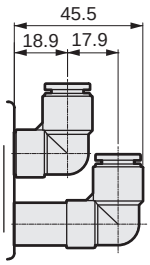

Dimensions CAD

MW4GZ2

● Flat cable connector (T5*)

* Figure shows T51.
Flat cable connector has T53.
Dimensions are the same as T51.

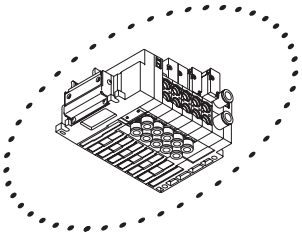

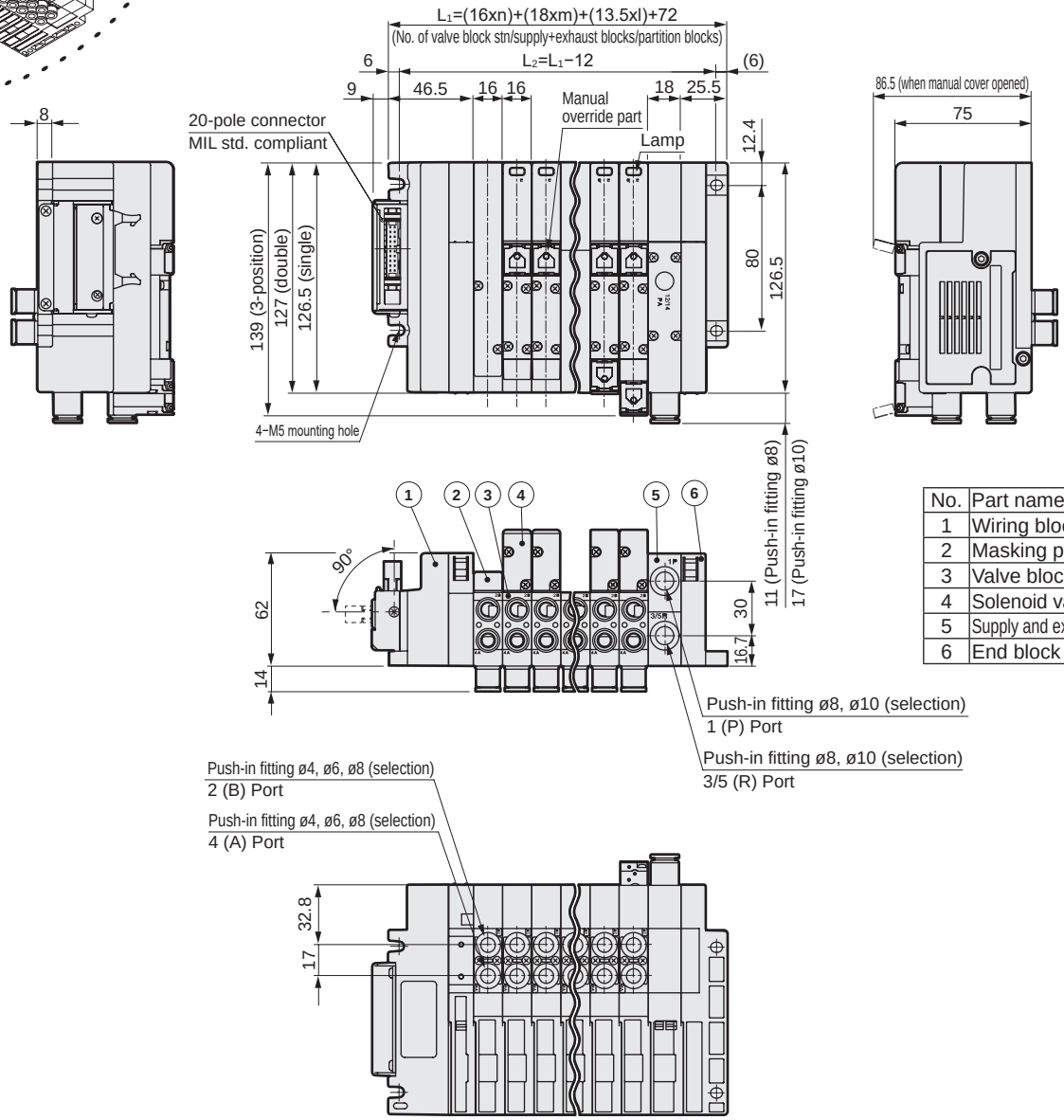

No.	Part name
1	Wiring block T5*
2	Masking plate
3	Valve block
4	Solenoid valve body
5	Supply and exhaust block
6	End block R

● Push-in L fitting for supply and exhaust block (upward)

● ø8(CL8)

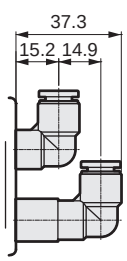

● ø10(CL10)

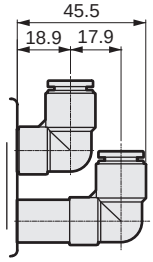

Dimensions CAD

MW4GZ2

● Serial transmission EtherCAT (T7□)

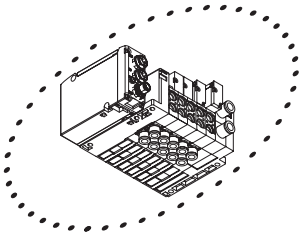

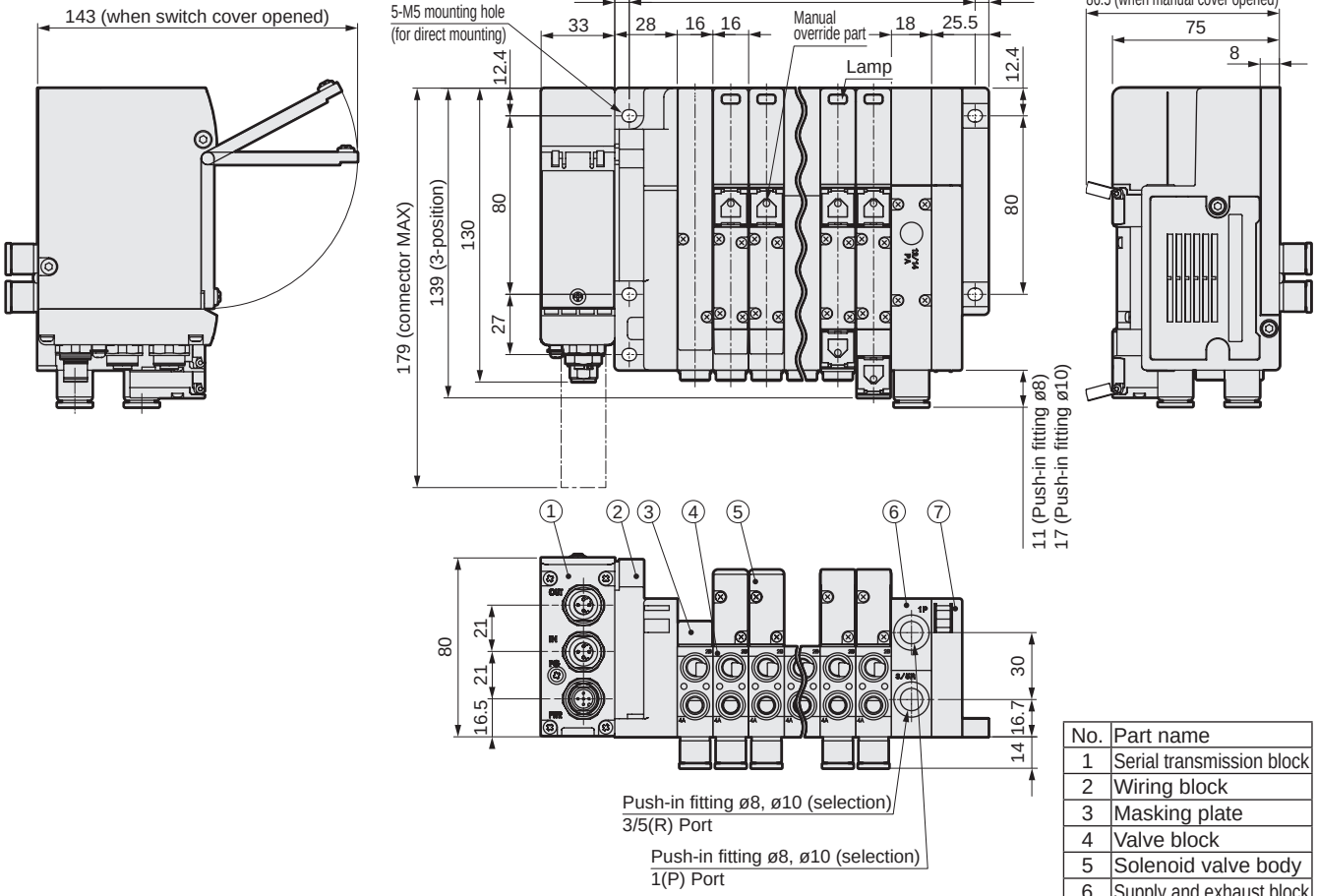

No.	Part name
1	Serial transmission block
2	Wiring block
3	Masking plate
4	Valve block
5	Solenoid valve body
6	Supply and exhaust block
7	End block R

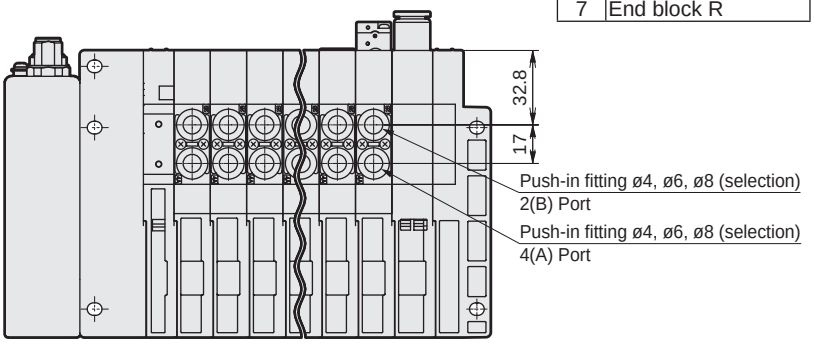

● Push-in L fitting for supply and exhaust block (upward)

● ø8(CL8)

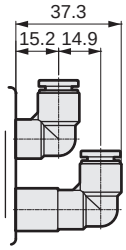

● ø10(CL10)

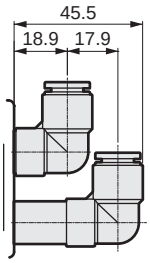

Dimensions CAD

MW4GZ2

● Serial transmission EtherCAT (T7□B) with I/O type

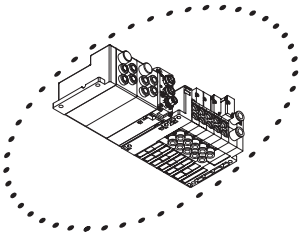

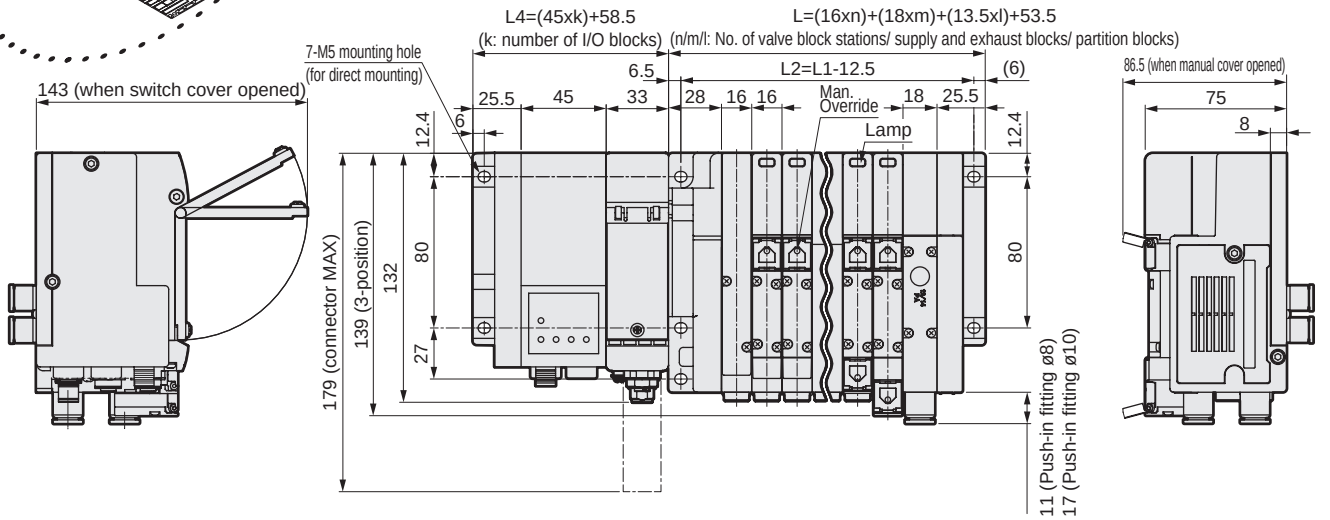

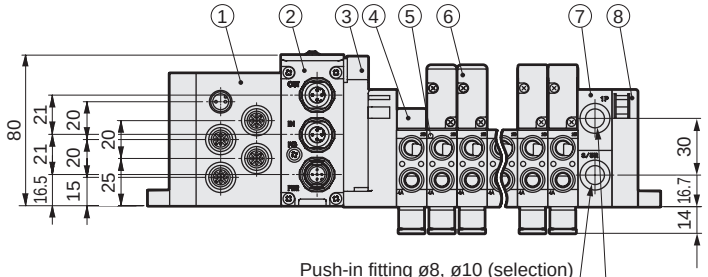

No.	Part name
1	I/O block
2	Serial transmission block
3	Wiring block
4	Masking plate
5	Valve block
6	Solenoid valve body
7	Supply and exhaust block
8	End block R

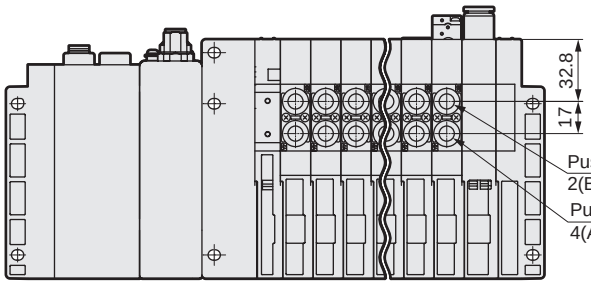

● Push-in L fitting for supply and exhaust block (upward)

● ø8(CL8) ● ø10(CL10)

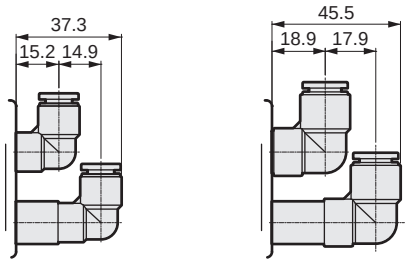

Dimensions CAD

MW4GZ2

● Serial transmission CC-Link (T8G*)

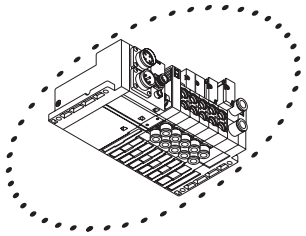

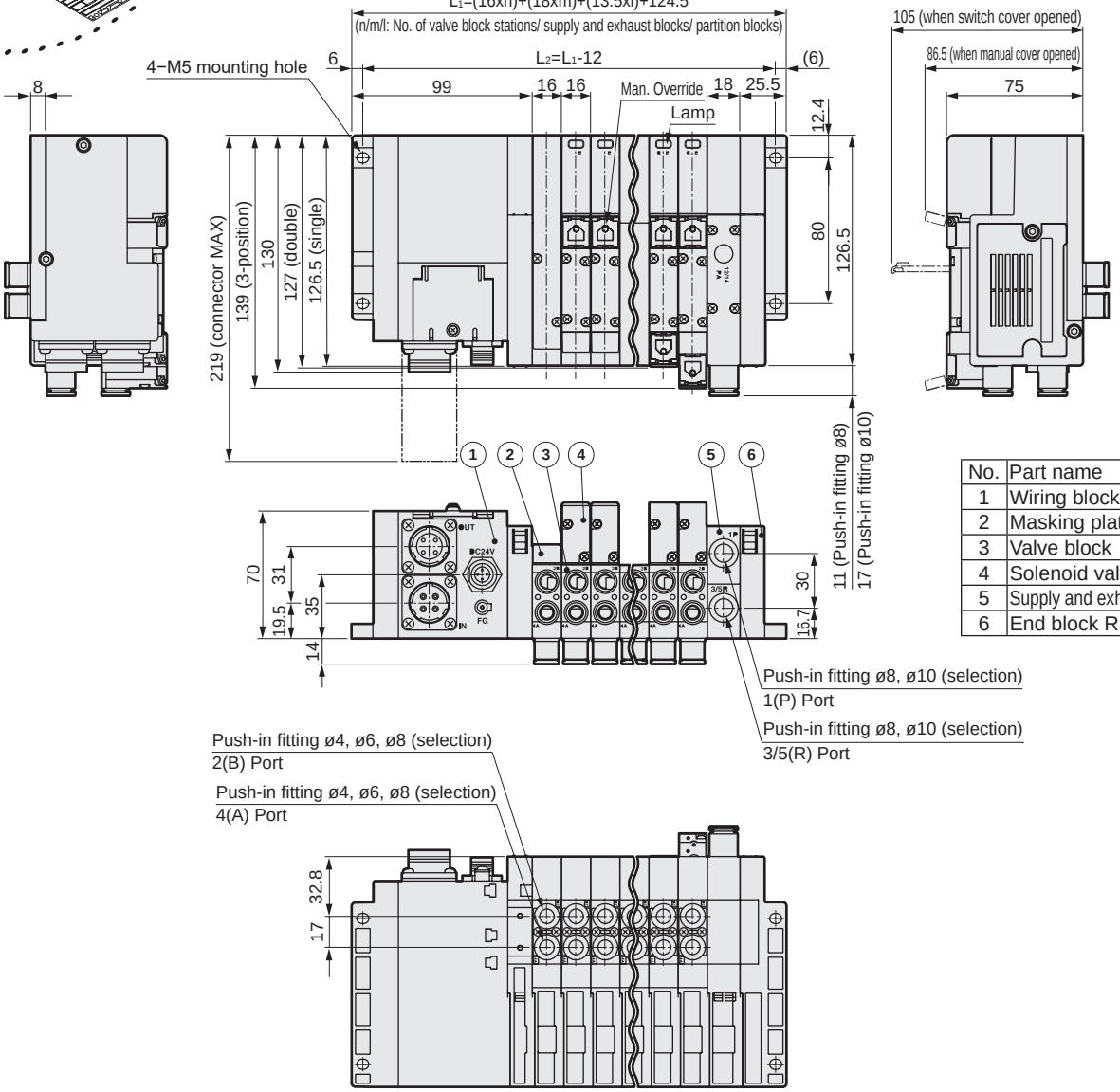

No.	Part name
1	Wiring block T8*
2	Masking plate
3	Valve block
4	Solenoid valve body
5	Supply and exhaust block
6	End block R

● Push-in L fitting for supply and exhaust block (upward)

● ø8(CL8)

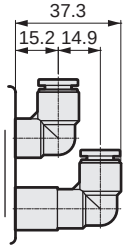

● ø10(CL10)

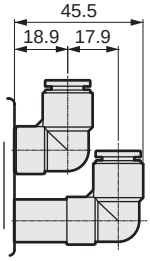

Dimensions CAD

MW4GZ2

● Serial transmission CC-Link (T8G*) + I/O block

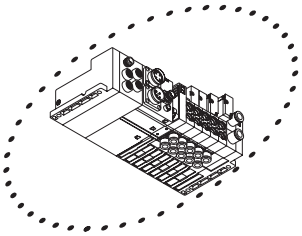

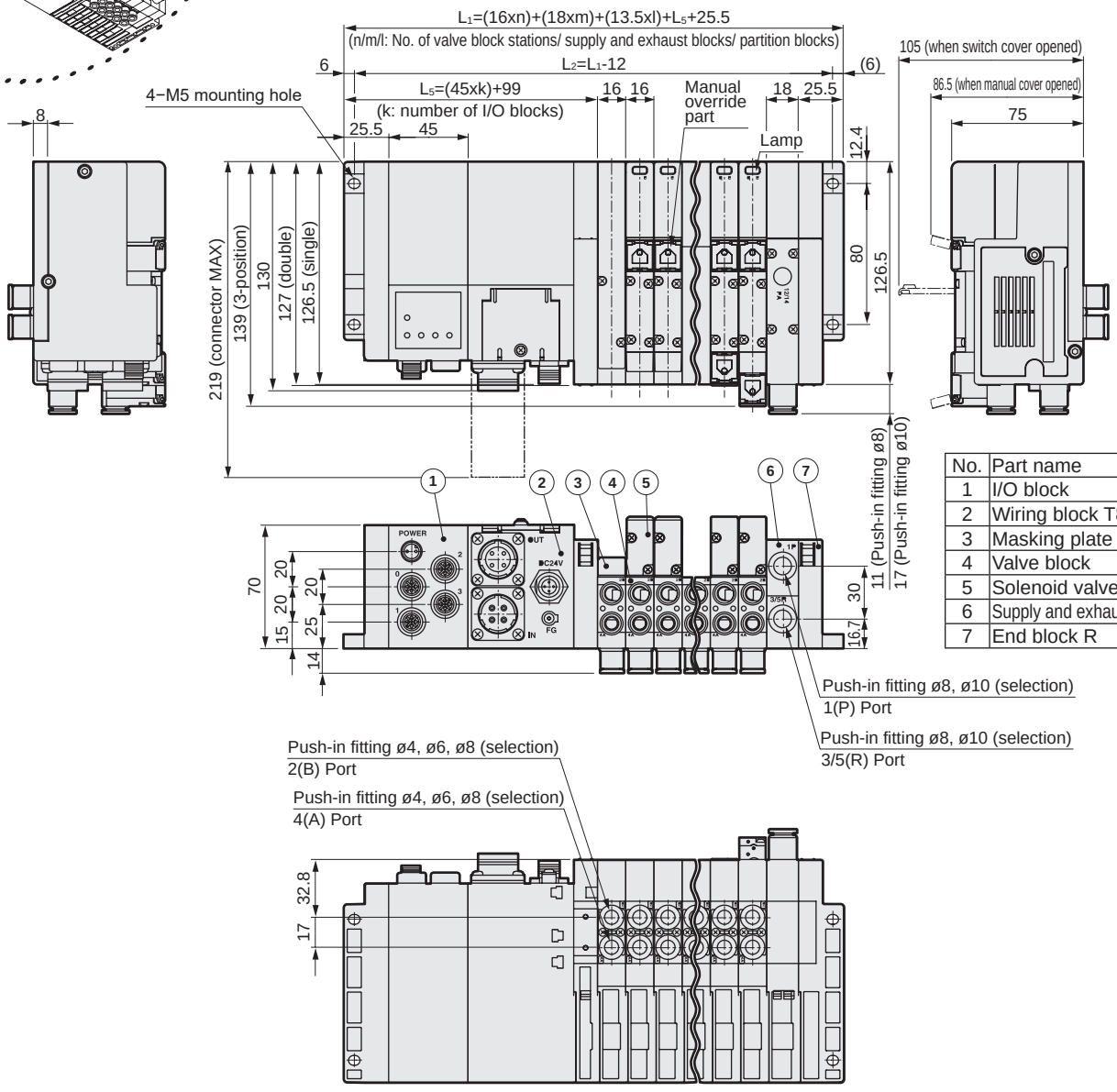

No.	Part name
1	I/O block
2	Wiring block T8*
3	Masking plate
4	Valve block
5	Solenoid valve body
6	Supply and exhaust block
7	End block R

● Push-in L fitting for supply and exhaust block (upward)

● ø8(CL8)

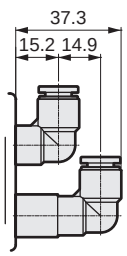

● ø10(CL10)

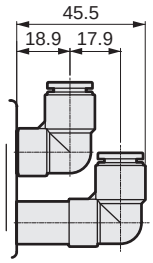

Dimensions CAD

MW4GZ2

● Serial transmission DeviceNet (T8D*)

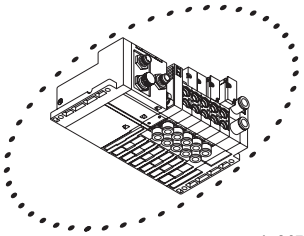

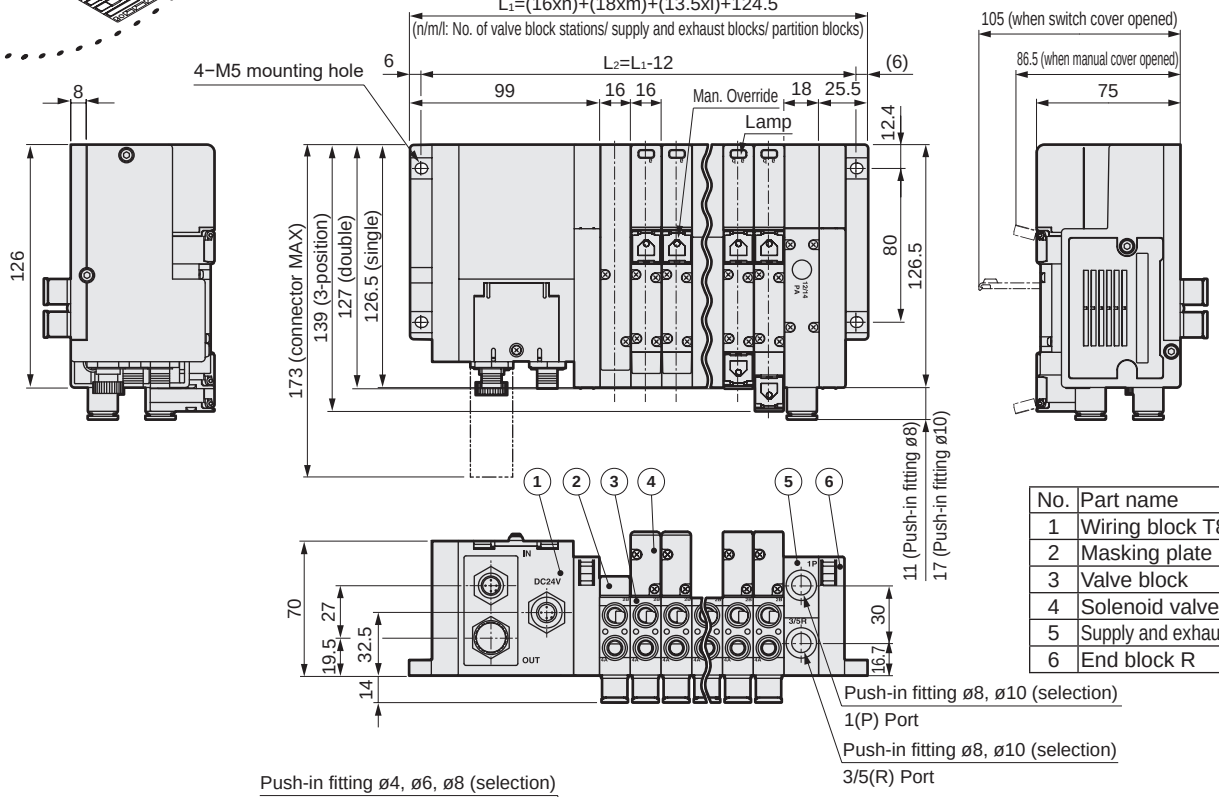

No.	Part name
1	Wiring block T8*
2	Masking plate
3	Valve block
4	Solenoid valve body
5	Supply and exhaust block
6	End block R

Push-in fitting ø8, ø10 (selection)
1(P) Port

Push-in fitting ø8, ø10 (selection)
3/5(R) Port

Push-in fitting ø4, ø6, ø8 (selection)
2(B) Port

Push-in fitting ø4, ø6, ø8 (selection)
4(A) Port

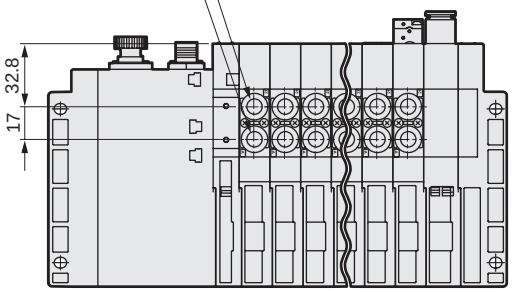

● Push-in L fitting for supply and exhaust block (upward)

● ø8(CL8)

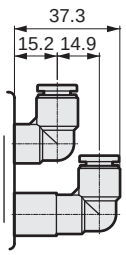

● ø10(CL10)

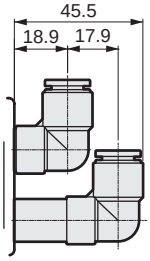

Dimensions CAD

MW4GZ2

● Serial transmission DeviceNet (T8D*) + I/O block

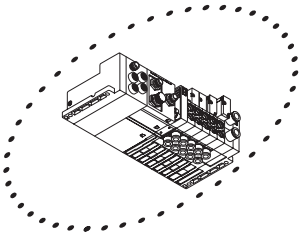

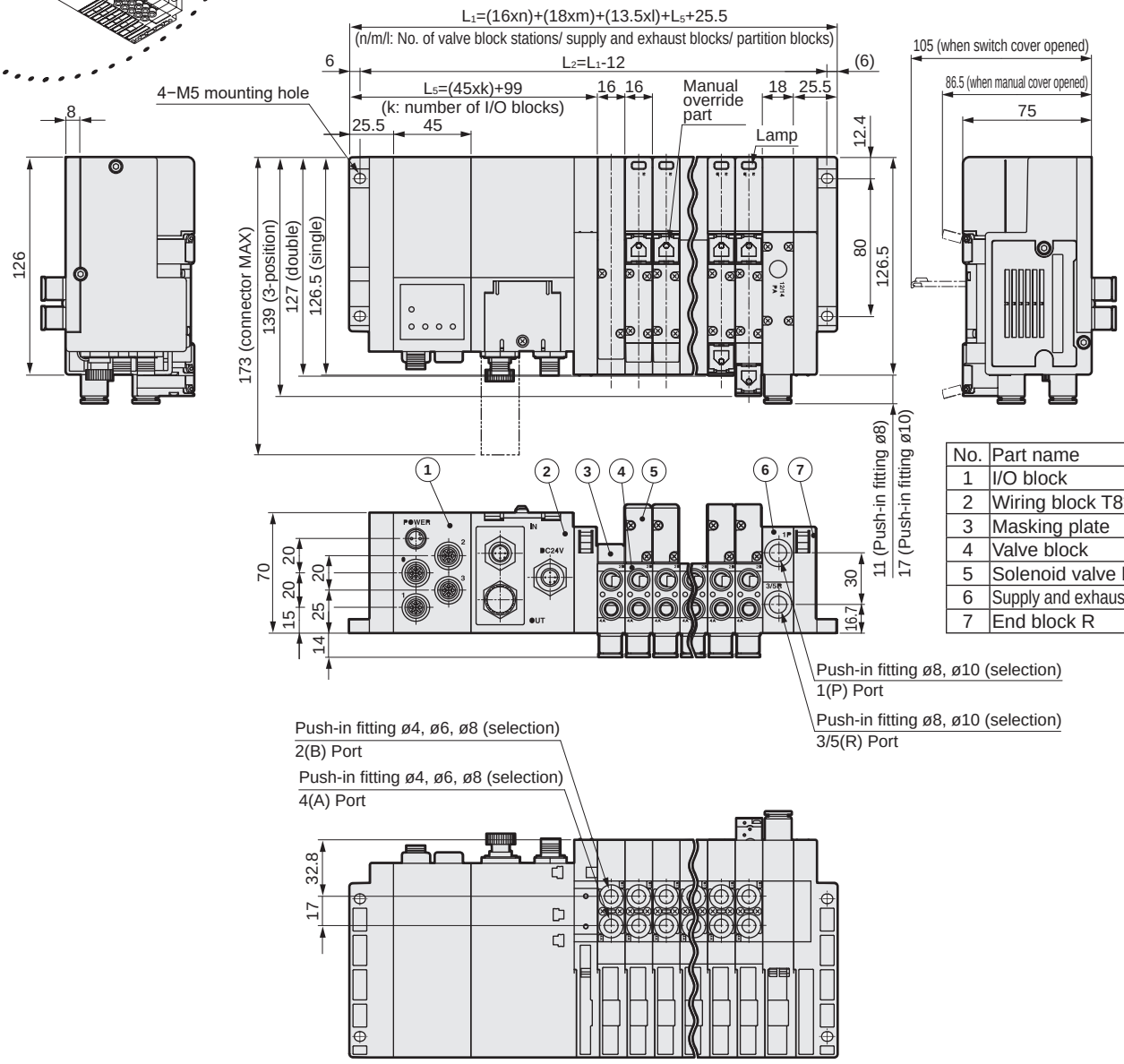

No.	Part name
1	I/O block
2	Wiring block T8*
3	Masking plate
4	Valve block
5	Solenoid valve body
6	Supply and exhaust block
7	End block R

● Push-in L fitting for supply and exhaust block (upward)

● ø8(CL8)

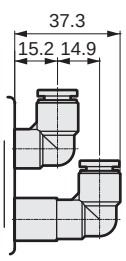

● ø10(CL10)

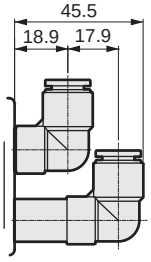

Dimensions CAD

MW4GZ2

● Serial transmission CompoBus/S (T8C*)

End of production product

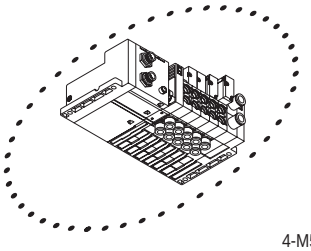

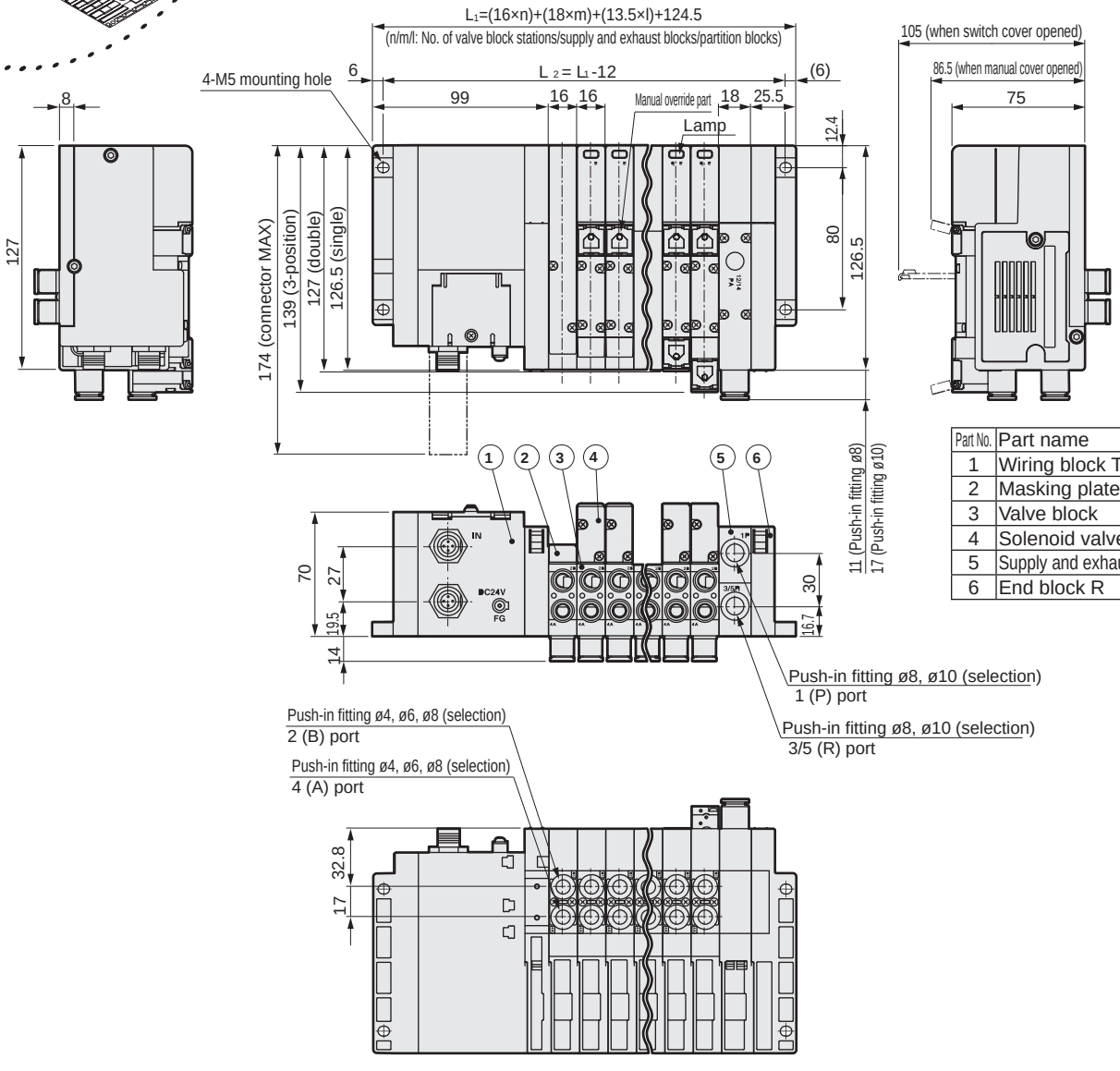

Part No.	Part name
1	Wiring block T8*
2	Masking plate
3	Valve block
4	Solenoid valve body
5	Supply and exhaust block
6	End block R

● Push-in L fitting for supply and exhaust block (upward)

● ø8 (CL8)

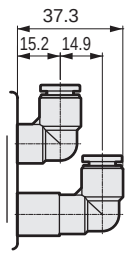

● ø10 (CL10)

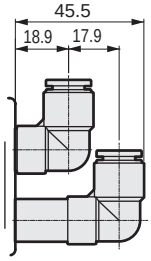

Dimensions CAD

MW4GZ2

● Serial transmission CompoBus/S (T8C*) + I/O block

End of production product

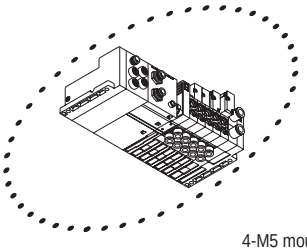

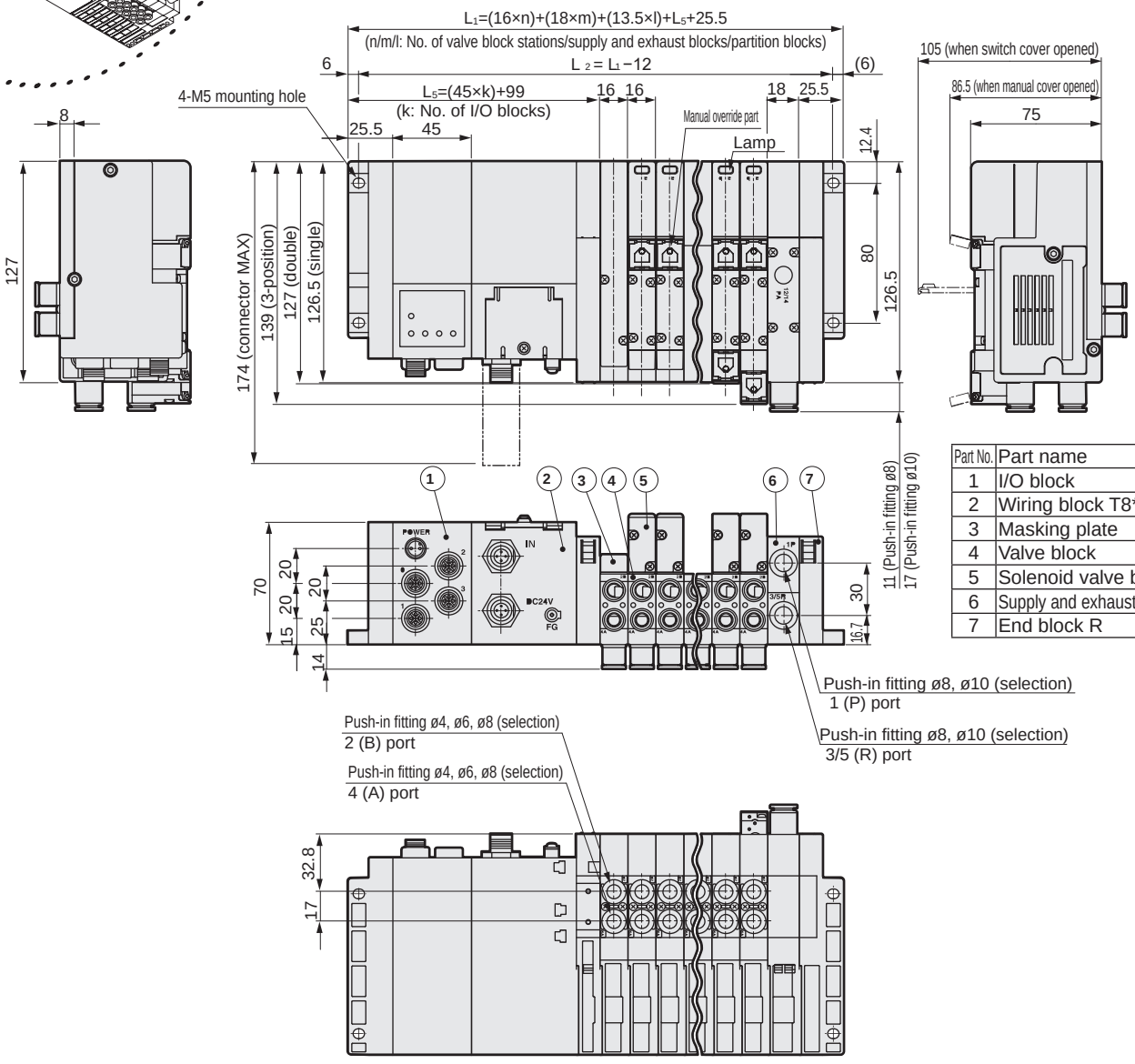

Part No.	Part name
1	I/O block
2	Wiring block T8*
3	Masking plate
4	Valve block
5	Solenoid valve body
6	Supply and exhaust block
7	End block R

● Push-in L fitting for supply and exhaust block (upward)

● ø8 (CL8)

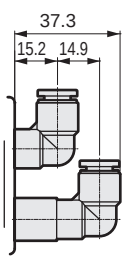

● ø10 (CL10)

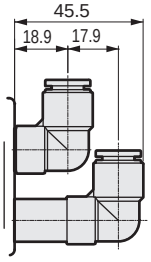

Block manifold: Block configuration

As units can be freely assembled, it is easy to change the number of stations, perform maintenance, etc.

● Valve block with solenoid valve

①Mount the desired types and number of solenoid valves.
However, the number of stations depends on the wiring method. (Refer to pages 976, 980, 988 and 1010.)
②Solenoid valves are numbered 1, 2, 3... from the left with the fitting in front.

● Supply and exhaust block

①At the connecting part of each block, a number of blocks can be freely connected.
②Select the internal pilot or external pilot according to the solenoid valve.
③Check the partition part before mounting the block in multi-pressure application.

● End block

①Mount the block on the opposite side of the wiring block.

● Partition block

①In multi-pressure application, pair the block with the supply and exhaust block.

● Manifold base

①Manifold base alone may be ordered. However, specifications are limited.
(The manifold specifications sheet is not necessary when ordering only the manifold base.)

● I/O block

①Mount the desired number of I/O blocks.
The station No. is determined according to the number of points set in the serial transmission device unit.
②I/O blocks are numbered 1, 2, 3... from the serial transmission device unit side.
③When mounting both an input block and output block, place the output block on the left. (with the fitting facing forward)

Block manifold configuration — **Piping** — Piping block

Ⓐ Discrete valve block with solenoid valve

● Body piping

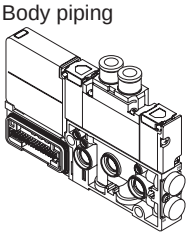

● Base side piping

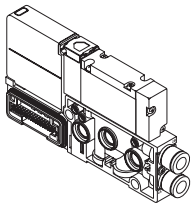

● Base bottom piping

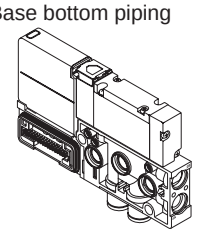

Ⓑ Discrete valve block with masking plate

● Body piping

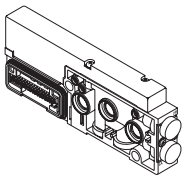

● Base side piping

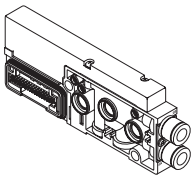

● Base bottom piping

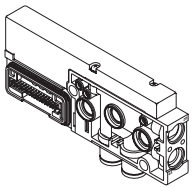

Ⓒ Discrete valve block

● Body piping

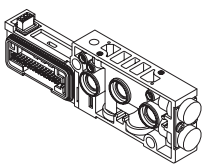

● Base side piping

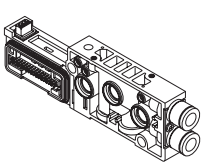

● Base bottom piping

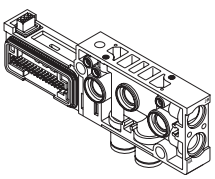

Block manifold configuration

Piping

Wiring

Related products

Piping block

Ⓓ Supply and exhaust block

● For internal pilot (Q)

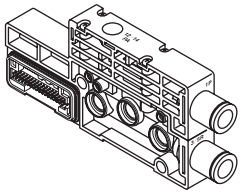

● For external pilot (QK)

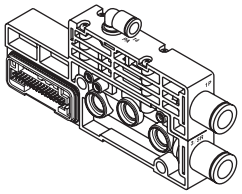

● Multi-pressure (QZ)

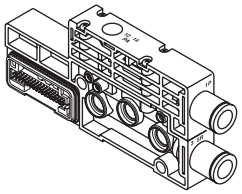

Ⓔ End block

● Right

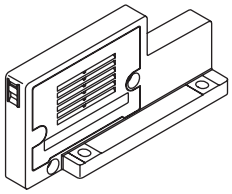

Ⓕ Partition block

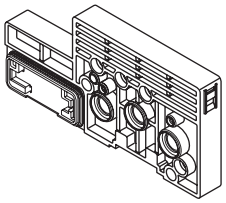

Ⓖ Manifold base

● Body piping

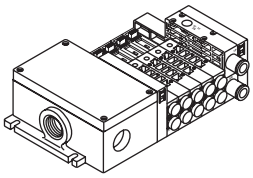

● Base side piping

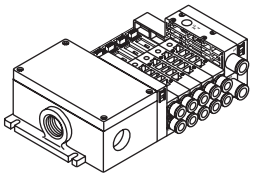

● Base bottom piping

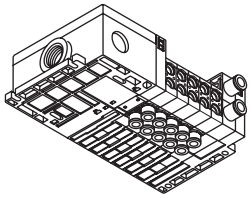

Wiring block

Ⓗ Common terminal box

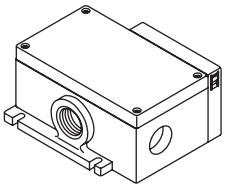

Ⓘ Multi-connector block

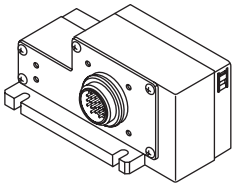

Ⓙ D sub-connector

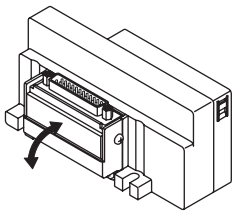

Ⓚ Flat cable connector

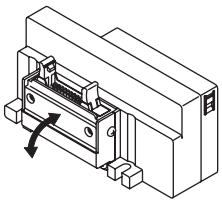

Ⓛ Serial transmission block

● T7

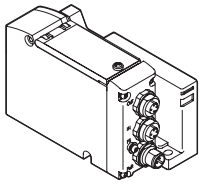

● T8 Top wiring

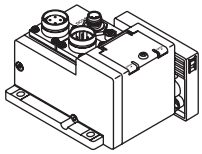

● T8 Side wiring

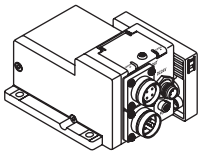

Ⓜ I/O block

● Top wiring

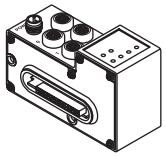

● Side wiring

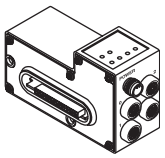

* When ordered as manifold component, an end block is mounted on the left as standard.

Related products

Ⓝ Related products

● Air supply spacer/ exhaust spacer

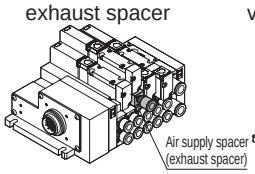

● Spacer pilot check valve

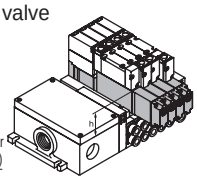

● Individual air supply compatible spacer with in-stop valve spacer

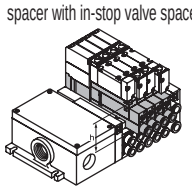

● Pilot check valve

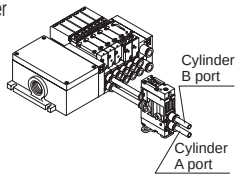

● Tag plate

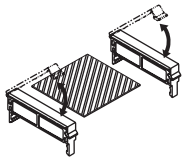

* Refer to page 194 for details.

● Silencer

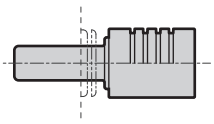

● Tie rod

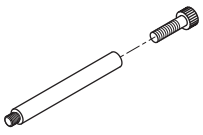

● Blanking plug

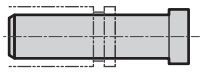

● Masking plate kit

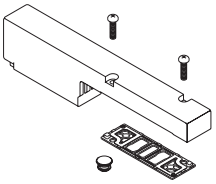

● DIN rail

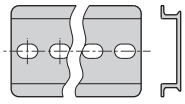

● DIN rail mounting bracket kit

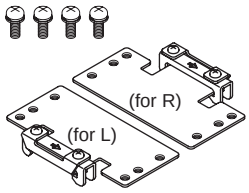

● Waterproof cap



● Waterproof plug



● Cable with connector (Wiring method T20)

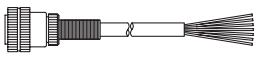

● Cable with D sub-connector (Wiring method T30)



Piping

A. Discrete valve block with solenoid valve

* Two tie rods are supplied when it is ordered for expansion.

Block assembled from solenoid valve body and valve block (split resin base).

For selection guide, refer to pages 977, 982, 983, 992 to 995 and 1014 to 1021.

B. Discrete valve block with masking plate

* Two tie rods are supplied when it is ordered for expansion.

NW4GA2 - MP ——— R1

NW4GB2 - MPS - C4 - F

NW4GZ2 - MPD - C4 - F

Model No. Ⓐ Type Ⓑ Port size Ⓒ Electrical connections Ⓓ Option

Ⓐ Type (*1)		Ⓑ Port size (*2)		Ⓒ Electrical connections (*3)		Ⓓ Option	
MP	Individual wiring	**C4**	ø4 push-in fitting	**Blank**	DC connector relay board specifications	**Blank**	No option
MPS	For standard wiring (single)	**C6**	ø6 push-in fitting	**R1**	I/O connector (M12) (500 mm)	**F**	A/B port filter built in
MPD	For double wiring (single), double/3-position	**C8**	ø8 push-in fitting	**2 to 8**	Select the AC cable length on page 1051.		
		C4NC	A port/ø4 push-in fitting, B port/plug				
		C4NO	A port/plug, B port/ø4 push-in fitting				
		C6NC	A port/ø6 push-in fitting, B port/plug				
		C6NO	A port/plug, B port/ø6 push-in fitting				
		C8NC	A port/ø8 push-in fitting, B port/plug				
		C8NO	A port/plug, B port/ø8 push-in fitting				
		CL6	ø6 push-in fitting (upward)				
		CL8	ø8 push-in fitting (upward)				
		CL6NC	A port/ø6 push-in fitting (upward), B port/plug				
		CL6NO	A port/plug, B port/ø6 push-in fitting (upward)				
		CL8NC	A port/ø8 push-in fitting (upward), B port/plug				
		CL8NO	A port/plug, B port/ø8 push-in fitting (upward)				

*1 Select MPD for AC voltage, since the socket assembly is wired as double solenoid.

*3 Keep the code blank for DC and specify the cable length of socket assembly for AC. If specified in the manifold specifications sheet, the cable length can be omitted.
The socket assembly for AC is wired as double solenoid.

*2 A/B Port size.
Plugs of ports A and B (*NC/*NO) are available for the 2-position single only.
CL* Push-in L fitting (upward) is available for the 2-position single and double only,
Long elbow fitting is for A port and short elbow fitting for B port.

[For DC]

NW4GA2-MPS

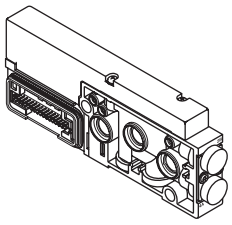

NW4GB2-MPS-C8

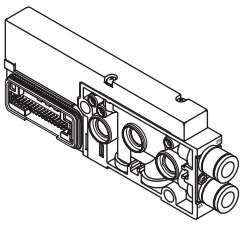

[For AC]

NW4GA2-MPD-2

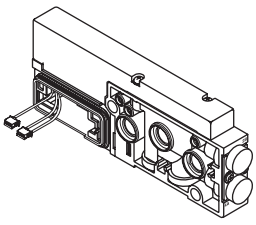

NW4GB2-MPD-C8-2

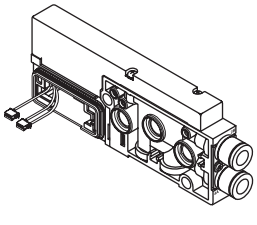

Piping

C. Discrete valve block (discrete only) * Two tie rods are supplied when it is ordered for expansion.

NW4GA2 - V ——— R1
NW4GB2 - V1 - C4 - F
NW4GZ2 - V2 - C4 - F

Model No. Ⓐ Type Ⓑ Port size Ⓒ Electrical connections Ⓓ Option

Ⓐ Type (*1)	
V	Individual wiring
V1	For standard wiring (single)
V2	For double wiring (single)/ for double/3-position

*1 Select V2 for AC voltage, since the socket assembly is wired as double solenoid.

Ⓑ Port size (*2)	
C4	ø4 push-in fitting
C6	ø6 push-in fitting
C8	ø8 push-in fitting
C4NC	A port/ø4 push-in fitting, B port/plug
C4NO	A port/plug, B port/ø4 push-in fitting
C6NC	A port/ø6 push-in fitting, B port/plug
C6NO	A port/plug, B port/ø6 push-in fitting
C8NC	A port/ø8 push-in fitting, B port/plug
C8NO	A port/plug, B port/ø8 push-in fitting
CL6	ø6 push-in fitting (upward)
CL8	ø8 push-in fitting (upward)
CL6NC	A port/ø6 push-in fitting (upward), B port/plug
CL6NO	A port/plug, B port/ø6 push-in fitting (upward)
CL8NC	A port/ø8 push-in fitting (upward), B port/plug
CL8NO	A port/plug, B port/ø8 push-in fitting (upward)

Ⓒ Electrical connections (*3)	
Blank	DC connector relay board specifications
R1	I/O connector (M12) (500 mm)
2 to 8	Select the AC cable length in the table below.

Ⓓ Option	
Blank	No option
F	A/B port filter built in

*3 Keep the code blank for DC and specify the cable length of socket assembly for AC.
The socket assembly for AC is wired as double solenoid.

*2 A/B Port size.
Plugs of ports A and B (*NC/*NO) are available for the 2-position single only.
CL* Push-in L fitting (upward) is available for the 2-position single and double only,
Long elbow fitting is for A port and short elbow fitting for B port.

[For DC]

NW4GA2-V1

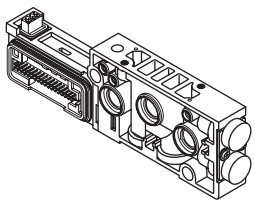

NW4GB2-V2-C8

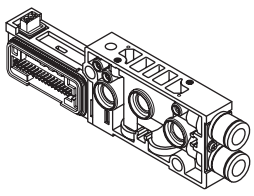

[For AC]

NW4GA2-V2-2

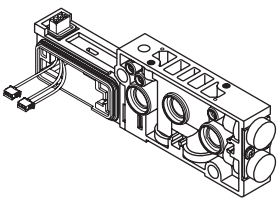

NW4GB2-V2-C8-2

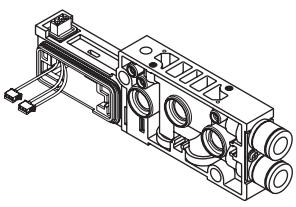

AC valve block cable length

When the total width of supply and exhaust blocks and partition blocks between the valve block to be connected and the wiring block is 63 mm and over (e.g., two supply and exhaust blocks + two partition blocks), calculate the width (W) and select the longer lead wire length closest to the width value.
W=(23.5xn)+(18xm)+(13.5xl)+230
n: number of valve blocks m: number of supply and exhaust blocks l: number of partition blocks

Consult with CKD if W exceeds 610 mm.

Selection No.	Cable length
2	1- to 2-station socket assembly (290 mm cable), AC
3	3- to 4-station socket assembly (330 mm cable), AC
4	5- to 6-station socket assembly (380 mm cable), AC
5	7- to 8-station socket assembly (430 mm cable), AC
6	9- to 10-station socket assembly (480 mm cable), AC
7	11- to 14-station socket assembly (530 mm cable), AC
8	15- to 18-station socket assembly (610 mm cable), AC

Fig. 1

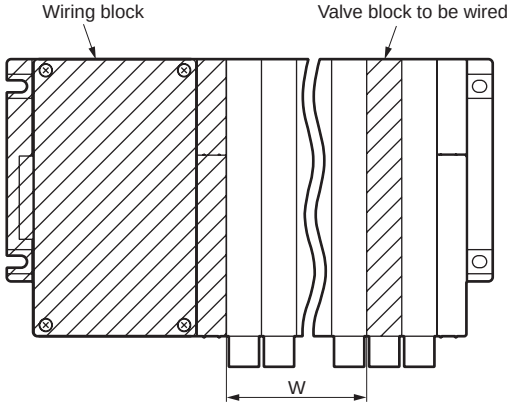

Piping

As problems may occur depending on the configuration, make selections with a sufficient understanding of the features of each block.

D. Supply and exhaust block

* Two tie rods are supplied when it is ordered for expansion.

The supply and exhaust block can be installed at any position adjacent to the valve block.
As there is no set number of units, install two or more units when necessary to increase the flow rate for supply and exhaust.
In order to prevent foreign matter from entering, the P-port is equipped with a filter.

NW4G2 - Q - 8 X - SA - ○

Model No. Ⓐ Type Ⓑ Port size Ⓒ Exhaust method Ⓓ Option (partition) Ⓔ Voltage

Ⓐ Type (*1)		Ⓑ Port size (port P/R) (*2)		Ⓒ Exhaust method (*3)		Ⓓ Option (partition type) (*4)		Ⓔ Voltage	
Q	Internal pilot	8	ø8 push-in fitting	Blank	Common exhaust	Blank	Without partition	Blank	DC connector relay board
QK	External pilot	8L	ø8 push-in fitting upward	X	Atmospheric release	SA	P/R/PA/PR blocked	AC	Without AC connector relay board
QZ	Multi-pressure circuit	10	ø10 push-in fitting			S	P/R blocked, PA/PR through		
QKZ	External pilot (PA/PR separated)	10L	ø10 push-in fitting upward						

*1 QZ cannot be used independently. Be sure to use with another (Q/QK/QKZ).

*2 In order to prevent foreign matter from entering, the P-port is equipped with a filter.

*3 The atmosphere release (X) discharges exhaust from the end block. Select the atmosphere release end block (EX) for X.

*4 Specify when integrating partition into the supply and exhaust block. Width of the manifold with multi-pressure can be reduced. In the manifold specifications sheet, specify the mounting position so that the partition is on the left and the supply and exhaust block is on the right.

*5 Select "AC" for individual wiring manifold since it does not need a DC connector relay board. Blank is also allowed.

[For DC]

NW4G2-Q-10

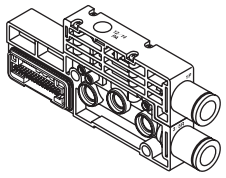

NW4G2-Q-10X

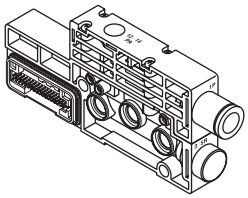

[For AC]

NW4G2-QK-10L-AC

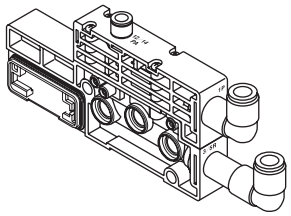

NW4G2-QK-10LX-AC

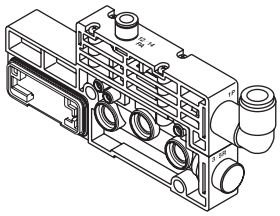

* For circuit diagrams, refer to page 1053.

E. End block

An exhaust muffler is built into the atmosphere release.

NW4G2 - ER

Model No. Ⓐ Type

Ⓐ Type (*1)	
EL	Common exhaust Left
ER	Common exhaust Right
EXL	Atmospheric pressure release Left
EXR	Atmospheric pressure release Right

*1: An exhaust muffler is built into the atmosphere release (EX).

NW4G2-ER

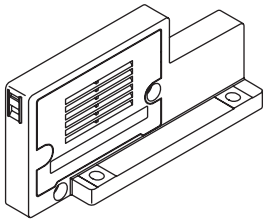

NW4G2-EL

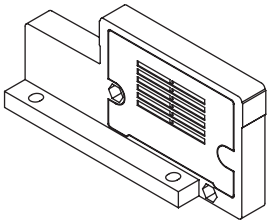

F. Partition block

* Two tie rods are supplied when it is ordered for expansion.

NW4G2 - SA - ○

Model No. Ⓐ Type Ⓑ Voltage

Ⓐ Type (*1)		Ⓑ Voltage	
SA	P/R/PA/PR blocked	Blank	DC connector relay board
S	P/R blocked, PA/PR through	AC	Without AC connector relay board

*1 PA and PR paths of pilot pressure for blocks other than SA are not blocked. Take note when configuring the system.

*2: Select "AC" for individual wiring manifold since it does not need a DC connector relay board. Blank is also allowed.

[For DC]
NW4G2-S

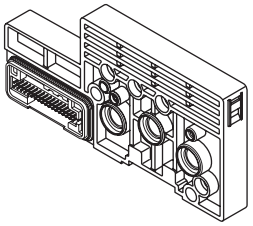

[For AC]
NW4G2-S-AC

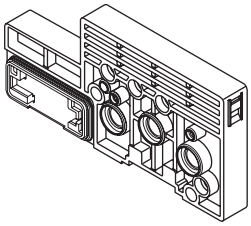

Piping

● Notes on configuring manifold

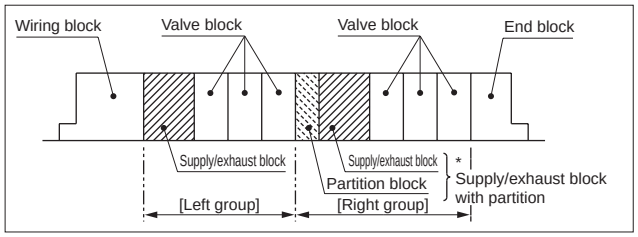

· The selected supply and exhaust block determines internal or external pilot operated. Valve block is the same for both types.
· Multi-pressure can be included when a partition block is combined with the supply and exhaust block.
· Using a supply and exhaust block with partition that combines the supply and exhaust function and partition in a single block can reduce the manifold width.
· Mount the supply and exhaust block with partition so that the partition is on the left and the supply and exhaust part is on the right with the piping port being on the near side.

● System configurations by block combination

· Combine the partition block and supply and exhaust block or use the supply and exhaust block with partition to configure the desired pneumatic system.
As some combinations may cause malfunction depending on the configuration, check the function of each block before actual implementation.
· Use the configuration examples below as a guide. (Supply and exhaust block with partition is used in the examples.)

Configuration for internal pilot (circuit symbol)

①Two supply pressures within the working pressure (0.2 to 0.7 MPa)

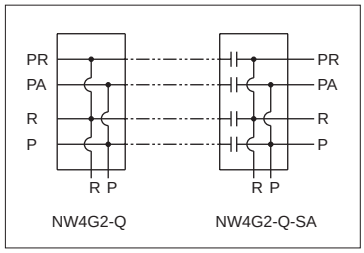

②Supply pressure within the working pressure (0.2 to 0.7 MPa) and supply pressure of low pressure (0.2 MPa or less) or low vacuum

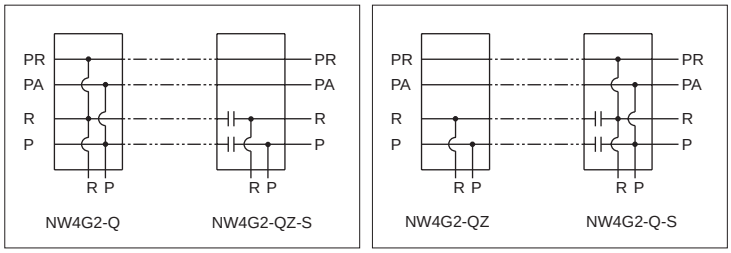

* QZ side is the low pressure or low vacuum circuit side.
* In the low vacuum circuit, R-port is the vacuum side and P-port is open to atmosphere or pressurized.

Configuration for external pilot (circuit symbol)

* A supply pressure of 0.2 to 0.7 MPa is applied to the pilot air supply port (PA).

③Supply pressure of low pressure (0.2 MPa or less) and supply pressure of low vacuum

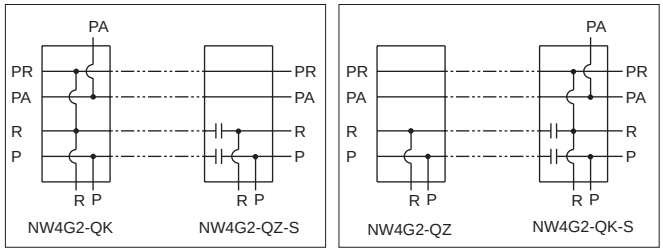

* QK side is the low pressure circuit side and QZ side is the low vacuum circuit side
* In the low vacuum circuit, R-port is the vacuum side and P-port is open to atmosphere or pressurized.

④Two supply pressures of low vacuum

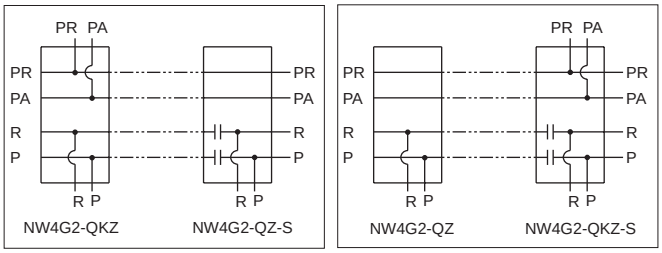

* In the low vacuum circuit, R-port is the vacuum side and P-port is open to atmosphere or pressurized.

● Partitioning specifications (partition block)

* Consult with CKD for products other than the standards (-SA, -S). (-SP, -SE)

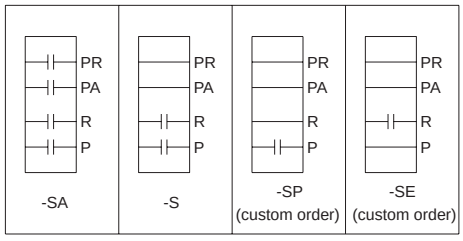

Piping

G. Manifold base

Manifold base alone may be ordered. However, specifications are limited.
(The manifold specifications sheet is not necessary when ordering only the manifold base.)

Body piping: MW4GA2 — 10 ○ U - R1 ○ ○ - 5 - 3

Base side piping: MW4GB2 - C8 - 10 ○ U - T10 W ○ - 5 - 3

Base bottom piping: MW4GZ2 - C8 - 10 ○ U - T10 W ○ - 5 - 3

Model No. / Ⓐ Port A/B Port size / Ⓒ Exhaust Method / Ⓑ Port P/R Port size / Ⓓ Port P/R Supply and exhaust position / Ⓔ Wiring Connection Type / Ⓕ Terminal Connector pin Array method / Ⓖ Option / Ⓗ Station No. / Ⓘ Voltage

Ⓐ Port A/B Port size		Ⓑ P/R Port Port size	
C4	ø4 push-in fitting	8	ø8 push-in fitting
C6	ø6 push-in fitting	8L	ø8 push-in L-fitting (upward)
C8	ø8 push-in fitting	10	ø10 push-in fitting
		10L	ø10 push-in L-fitting (upward)

Ⓒ Exhaust method		Ⓓ P/R Port Supply and exhaust position	
Blank	Common exhaust	D	Left
X	Atmospheric release	U	Right

*1 In the case of X, the end block is an atmosphere release type (EX).

Ⓔ Wiring method(Note2) (including standard lamp and surge suppressor)		
R 1	Individual wiring I/O cable outlet	
T10	Common terminal block (M3 screw) Left-sided spec.	
T20	Multi-connector Left-sided spec.	
T30	D-sub-connector Left-sided spec.	
T51	20-pin flat cable connector (without power supply terminal) Left-sided spec.	
T53	26-pin flat cable connector (without power supply terminal) Left-sided spec.	
T7EC1	Serial transmission Thin EtherCAT	16-point output (N)PN)
T7ECP1		16 point output(PNP)
T7EC2		32Point output (NPN)
T7ECP2		32Point output (PNP)
T7EN1	Serial trans-mission Thin EtherNet/IP	16-point output (NPN)
T7ENP1		16-point output (PNP)
T7EN2		32-point output (NPN)
T7ENP2		32-point output (PNP)
T7EB1	Serial trans-mission Thin CC-Link IEF Basic	16-point output (NPN)
T7EBP1		16-point output (PNP)
T7EB2		32-point output (NPN)
T7EBP2		32-point output (PNP)
T7EP1	Serial trans-mission thin PROFINET	16-point output (NPN)
T7EPP1		16-point output (PNP)
T7EP2		32-point output (NPN)
T7EPP2		32-point output (PNP)
T8G1	Serial transmission CC-Link	16 point output
T8G2		32 point output
T8D1	Serial transmission DeviceNet	16 point output
T8D2		32 point output

*2 100 VAC is only for common terminal block specifications. Serial transmission is not available with 100 VAC and 12 VDC.

Ⓕ Terminal connectorKuta pin Array method	
W	Double wiring

Ⓖ Option (*3)		
Blank	No option	
K	External pilot	
F	Port A/B filter integrated	(*4)

Ⓗ Station No. (*5)	
2	2 stations
to	to
16	16 stations

Ⓘ Voltage	
1	100 VAC (rectifier integrated)
3	24 VDC
4	12 VDC

*3 I/O block cannot be selected.
*4 A filter is built into port P.
***5 Differs depending on the reduced wiring specifications. Note that double wiring is applied to those other than the R1 wiring method. Refer to (pages 976, 980, 988 and 1010).**

MW4GA2 (Body piping)

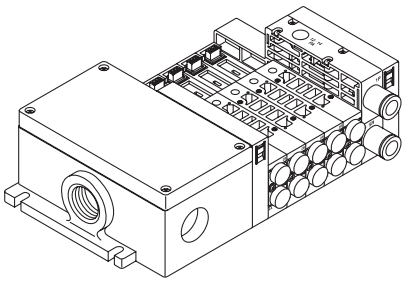

MW4GB2 (Base side piping)

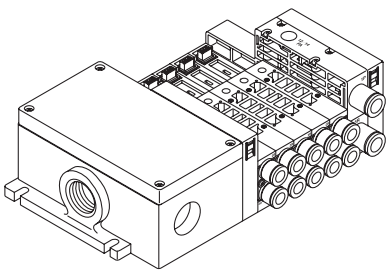

MW4GZ2 (Base bottom piping)

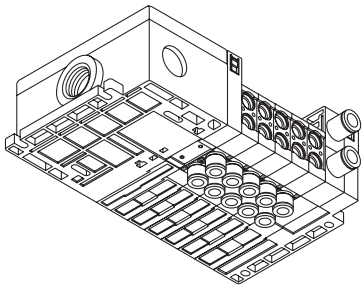

Wiring (Wiring block) * Consult CKD to order the wiring block alone as a single item.

H. Common terminal box (T10)

NW4G2-T10

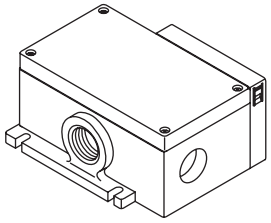

I. Multi-connector block (T20)

NW4G2-T20

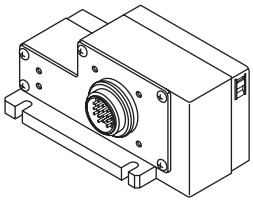

J. D-sub-connector (T30)

NW4G2-T30

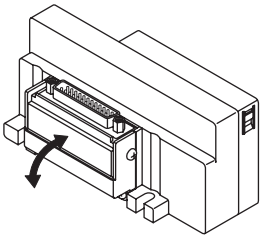

K. Flat cable connector (T5)

NW4G2-T5*

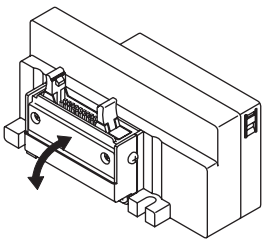

*Wiring block cannot be ordered alone as a single item.

L. Serial transmission block (When ordered as a manifold component and combined with I/O blocks, an end block is mounted on the left of the I/O block as standard.)

● EtherCAT (T7*)

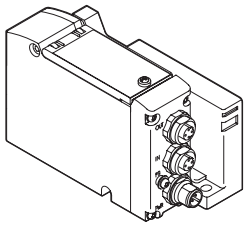

*To order as a single item, contact CKD.

NW4G2 - T7EC1

Ⓐ Type

Ⓐ Type	
T7EC1	16-point output (NPN valve output)
T7ECP1	16-point output (PNP valve output)
T7EC2	32-point output (NPN valve output)
T7ECP2	32-point output (PNP valve output)
T7ECB7	16-point I/O (NPN valve output)
T7ECPB7	16-point I/O (PNP valve output)
T7EN1	16-point output (NPN valve output)
T7ENP1	16-point output (PNP valve output)
T7EN2	32-point output (NPN valve output)
T7ENP2	32-point output (PNP valve output)
T7ENB7	16-point I/O (NPN valve output)
T7ENBP7	16-point I/O (PNP valve output)
T7EB1	16-point output (NPN valve output)
T7EBP1	16-point output (PNP valve output)
T7EB2	32-point output (NPN valve output)
T7EBP2	32-point output (PNP valve output)
T7EBB7	16-point I/O (NPN valve output)
T7EBPB7	16-point I/O (PNP valve output)
T7EPPB7	16-point I/O (PNP valve output)
T7EP1	16-point output (NPN valve output)
T7EPP1	16-point output (PNP valve output)
T7EP2	32-point output (NPN valve output)
T7EPP2	32-point output (PNP valve output)
T7EPB7	16-point I/O (NPN valve output)
T7EPPB7	16-point I/O (PNP valve output)

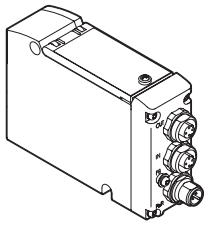

W4G - OPP8 - 1EC

Ⓐ Type

Ⓐ Type		
1EC	T7EC1	16-point output (NPN valve output)
1EC-P	T7ECP1	16-point output (PNP valve output)
2EC	T7EC2	32-point output (NPN valve output)
2EC-P	T7ECP2	32-point output (PNP valve output)
7EC-B	T7ECB7	16-point I/O (NPN valve output)
7EC-PB	T7ECPB7	16-point I/O (PNP valve output)
1EN	T7EN1	16-point output (NPN valve output)
1EN-P	T7ENP1	16-point output (PNP valve output)
2EN	T7EN2	32-point output (NPN valve output)
2EN-P	T7ENP2	32-point output (PNP valve output)
7EN-B	T7ENB7	16-point I/O (NPN valve output)
7EN-PB	T7ENBP7	16-point I/O (PNP valve output)
1EB	T7EB1	16-point output (NPN valve output)
1EB-P	T7EBP1	16-point output (PNP valve output)
2EB	T7EB2	32-point output (NPN valve output)
2EB-P	T7EBP2	32-point output (PNP valve output)
7EB-B	T7EBB7	16-point I/O (NPN valve output)
7EB-PB	T7EBPB7	16-point I/O (PNP valve output)
1EP	T7EP1	16-point output (NPN valve output)
1EP-P	T7EPP1	16-point output (PNP valve output)
2EP	T7EP2	32-point output (NPN valve output)
2EP-P	T7EPP2	32-point output (PNP valve output)
7EP-B	T7EPB7	16-point I/O (NPN valve output)
7EP-PB	T7EPPB7	16-point I/O (PNP valve output)

● CC-Link (T8G*)

NW4GA2-T8G*

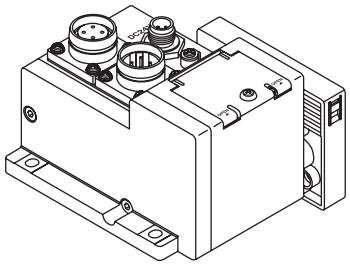

NW4GA2 - T8G1

Ⓐ Type

Ⓐ Type	
T8G1	16-point output
T8G2	32-point output
T8G7	16-point input/16-point output

NW4GB2-T8G*

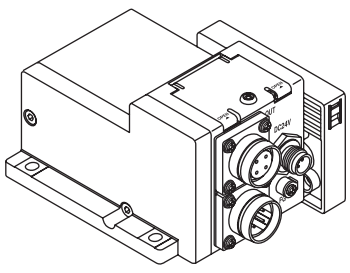

NW4GB2 - T8G1

Ⓐ Type

Ⓐ Type	
T8G1	16-point output
T8G2	32-point output
T8G7	16-point input/16-point output

● Device Net (T8D*)

NW4GA2-T8D*

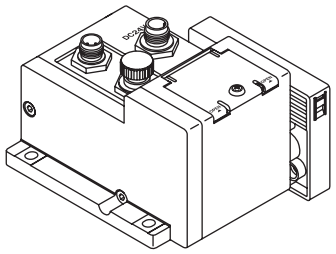

NW4GA2 - T8D1

Ⓐ Type

Ⓐ Type	
T8D1	16-point output
T8D2	32-point output
T8D7	16-point input/16-point output

NW4GB2-T8D*

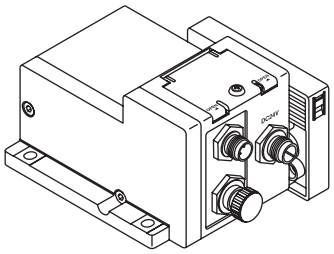

NW4GB2 - T8D1

Ⓐ Type

Ⓐ Type	
T8D1	16-point output
T8D2	32-point output
T8D7	16-point input/16-point output

M. I/O block

* Two tie rods are supplied when it is ordered for expansion.

Top wiring: **NW4GA2 - IN - N - K**

Side wiring: **NW4GB2 - OUT - N - B**

Ⓐ I/O
Ⓑ I/O type
Ⓒ Power supply

Ⓐ I/O		Ⓑ I/O type		Ⓒ Power supply	
IN	Input	**N**	Sink	**K**	Shared with serial transmission device unit *1, *2
OUT	Output	**P**	Source	**B**	External power supply

*1 Output block can be used with external power supply (B) only.
*2 A waterproof cap is attached as standard to the power supply connector of the power supply shared (K) with the serial transmission device

NW4GA2-$^{IN}_{OUT}$-$^{N}_{P}$-$^{K}_{B}$

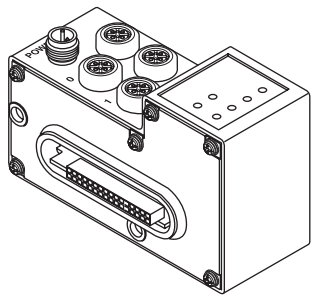

NW4GB2-$^{IN}_{OUT}$-$^{N}_{P}$-$^{K}_{B}$

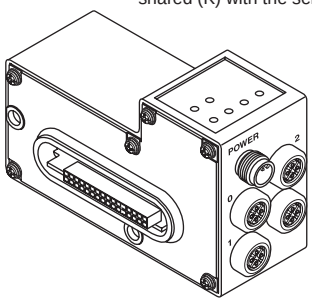

* When serial transmission device unit is T7, all are side wiring.

* When ordered as manifold component and combined with I/O block, an end block is mounted on the left as standard.

I/O type [Simplified circuit]

	Input block	Output block
Sink	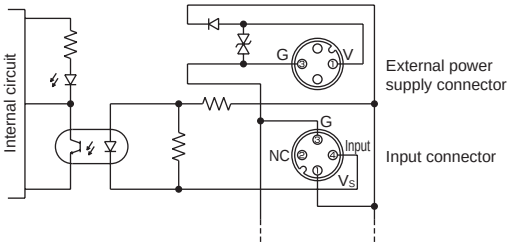	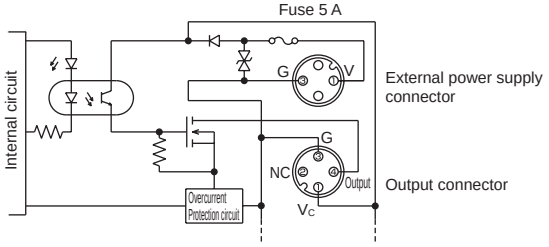
Source type	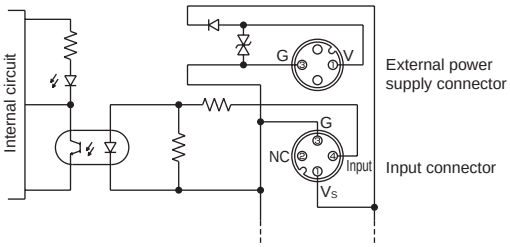	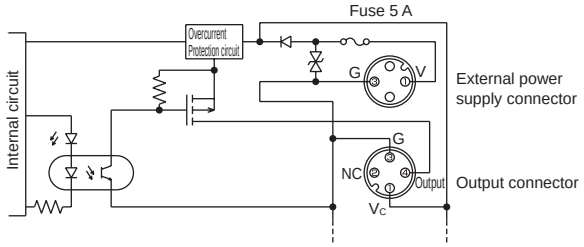

* For wiring methods, refer to page 1087.

Related products

● Air supply spacer/exhaust spacer

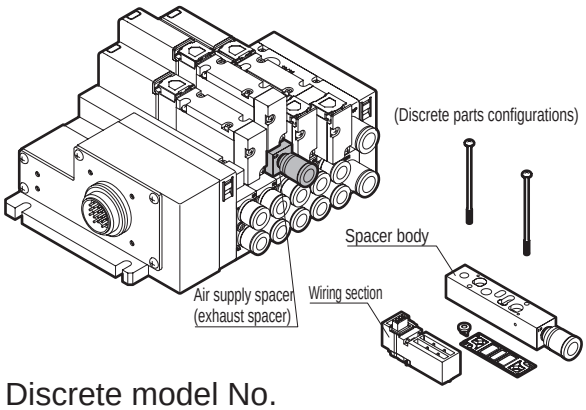

Specifications

● Air supply spacer

Model No.	P → A/B		A/B→R		Weight g
	C[dm³/(s·bar)]	b	C[dm³/(s·bar)]	b	
W4G2-P-*-*	1.8	0.20	1.6	0.15	60

Note: Effective cross-sectional area S and sonic conductance C are converted as S ≈ 5.0 x C.

● Exhaust spacer

Model No.	P → A/B		A/B→R		Weight g
	C[dm³/(s·bar)]	b	C[dm³/(s·bar)]	b	
W4G2-R-**	1.9	0.20	1.5	0.21	60

Note: Effective cross-sectional area S and sonic conductance C are converted as S ≈ 5.0 x C.

Discrete model No.

● Air supply spacer

W4G2 - P ○ - GWS6

Ⓐ Type *2 Ⓑ Port size

Code	Description	
Ⓐ Type		
Blank	Internal pilot	
K	External pilot	
Ⓑ Port size		
	Bore size	Description
Blank	Rc1/8	
GWS6	ø6	With GWS6-6-S
GWS8	ø8	With GWS8-6-S

● Exhaust spacer

W4G2 - R - GWS6

Ⓐ Port size

Code	Description	
Ⓐ Port size		
	Bore size	Description
Blank	Rc1/8	
GWS6	ø6	With GWS6-6-S
GWS8	ø8	With GWS8-6-S
SLW	With silencer (SLW-6S)	

⚠ Precautions for model No. selection

***1: Specify the positions and quantity of spacers for manifold in the manifold specifications sheet (Pages 1098 to 1101).**
*2: Use the air supply spacer for external pilot (W4G2-PK) when the manifold is the external pilot (K).
*3: Stacking of spacers is not possible.
*4: A spacer cannot be combined with a masking plate.
*5: A spacer cannot be combined with the W4GB2 port A/B fitting elbow.

Dimensions

● Air supply spacer

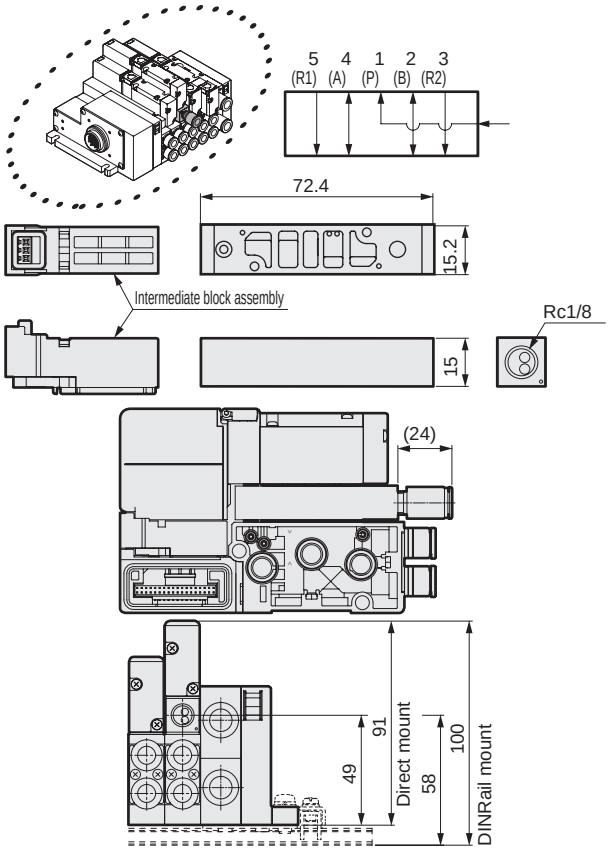

● Exhaust spacer

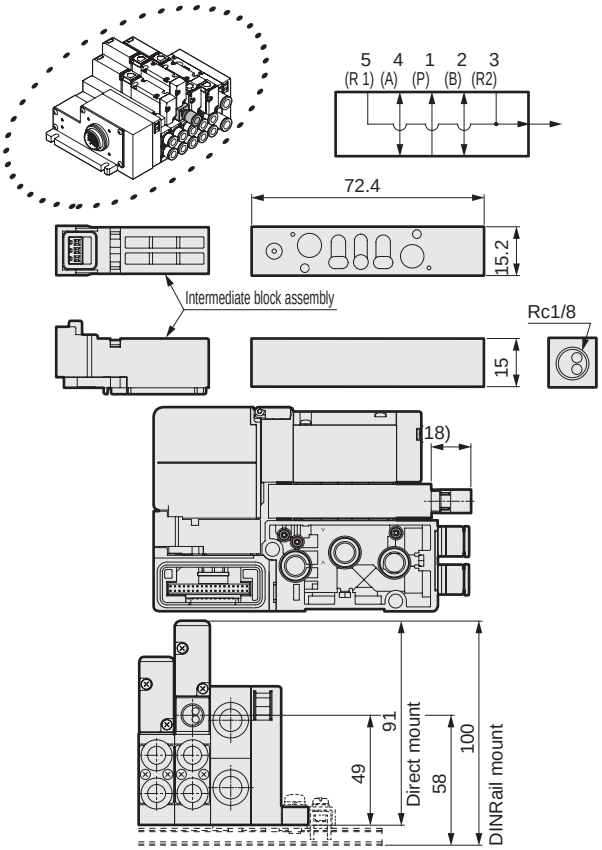

Related products

● Spacer pilot check valve

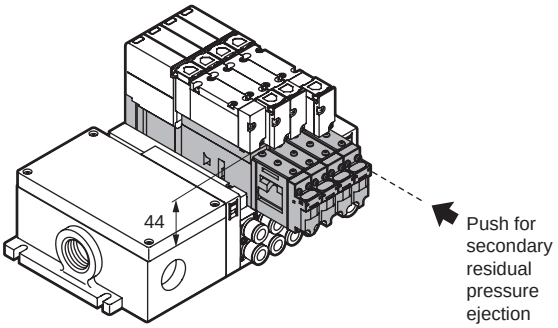

Specifications

Pilot check valve		W4G2-PC-M
Working fluid		Compressed air
Max. working pressure	MPa	0.7 (≈100 psi, 7 bar)
Min. working pressure	MPa	0.2 (≈29 psi, 2 bar)
Proof pressure	MPa	1.05 (≈150 psi, 10.5 bar)
Flow characteristics C	$dm^3/(s \cdot bar)$	0.8 (Solenoid valve)
Ambient temperature	°C	-5 (23°F) to 55 (131°F) (no freezing)
Working fluid temperature	°C	5 (41°F) to 55 (131°F)
Lubrication	(*1)	Not required
Atmosphere		Cannot be used in corrosive gas environment.
Weight	g	182.5

*1: Use turbine oil Class 1 ISO VG32 for lubrication.
Note that excessive lubricant may cause unstable operation.

JIS symbol

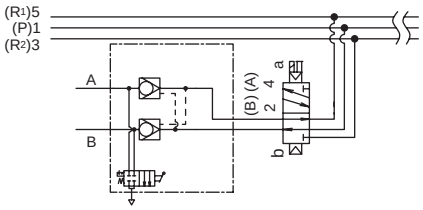

Note: Using a large bore size cylinder (roughly ø50 and over) with little restriction on the exhaust side (e.g., without speed controller or silencer) may lower the intermediate stopping accuracy or cause a braking error.

How to order

W4G2 - PC - M

- M: With residual pressure release function
- PC: Pilot check valve

⚠ Precautions for model No. selection

*1: Specify the spacer positions in the manifold specifications sheet.
*2: Spacer pilot check valve is not available when the fitting for port A/B is elbow.
*3: Stacking of spacers is not possible.
*4: A spacer cannot be combined with a masking plate.
*5: The spacer pilot check valve can be mounted only when the piping method is base piping(B/Z).

Dimensions

● MW4GB2

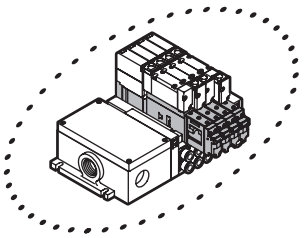

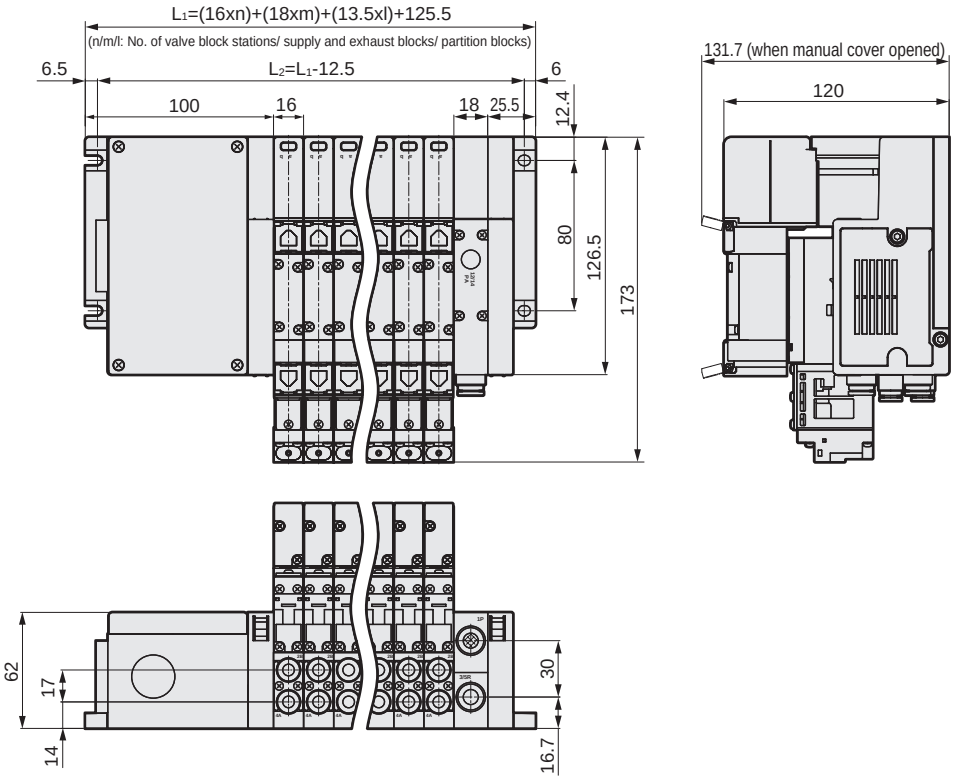

● Individual air supply compatible spacer with in-stop valve spacer

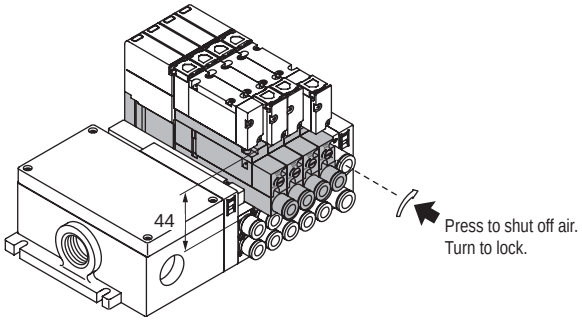

Specifications

Pilot check valve		W4G2-PIS
Working fluid		Compressed air
Max. working pressure	MPa	0.7
Min. working pressure	MPa	0.2
Proof pressure	MPa	1.05
Flow characteristics C	$dm^3/(s \cdot bar)$	1.1
Ambient temperature	°C	−5 to 55 (no freezing)
Working fluid temperature	°C	5 to 55
Lubrication	(*1)	Not required
Atmosphere		Cannot be used in corrosive gas environment.
Weight	g	115.4

*1: Use turbine oil Class 1 ISO VG32 for lubrication. Note that excessive lubricant may cause unstable operation.

JIS symbol

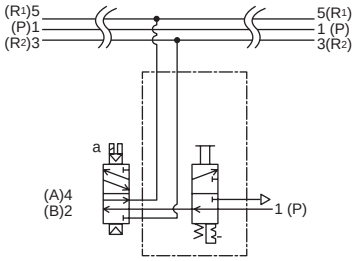

How to order

W4G2 - PIS - GWS6

With in-stop valve spacer
Individual air supply spacer

Ⓐ Port size

Code	Description
Ⓐ **Port size**	
GWS6	ø6 fitting
GWS8	ø8 fitting

⚠ Precautions for model No. selection

*1: Specify the spacer positions in the manifold specifications sheet.
*2: A/B individual air supply compatible spacer with in-stop valve spacer is not available when the fitting is elbow.
*3: Individual air supply compatible spacer with in-stop valve spacer is not compatible with external pilot (K).
*4: Stacking of spacers is not possible.
*5: A spacer cannot be combined with a masking plate.

Dimensions

● MW4GB2

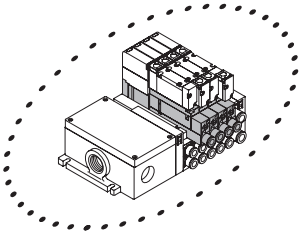

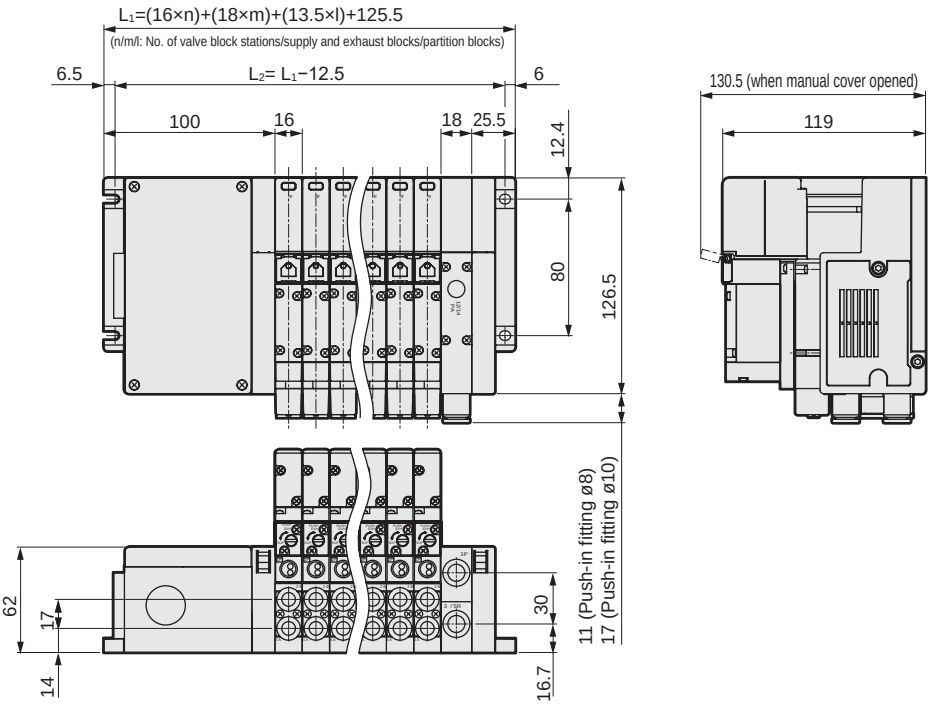

Related products

● Pilot check valve

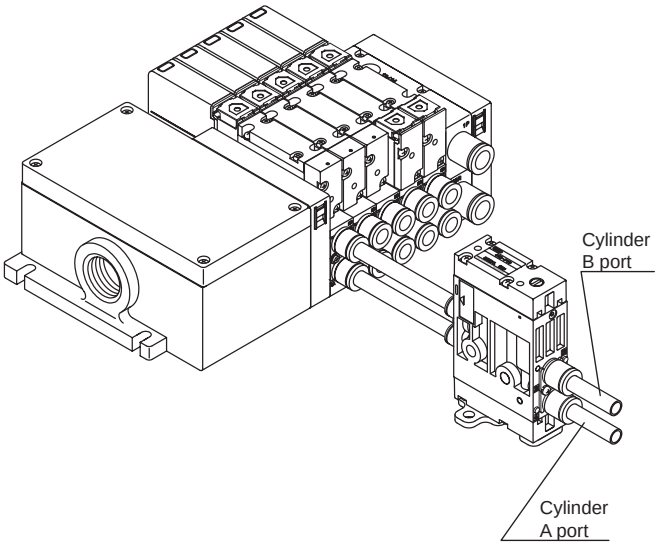

* For details, refer to page 194 in this catalog.

Related products

● Tag plate Attached to the manifold body at shipment.
When required, mark a circle in the field for tag plates in the manifold specifications on pages 1098 to 1101.

[Tag holder]

N4G2 - TAG-HOLDER
(available in sets of 2.)

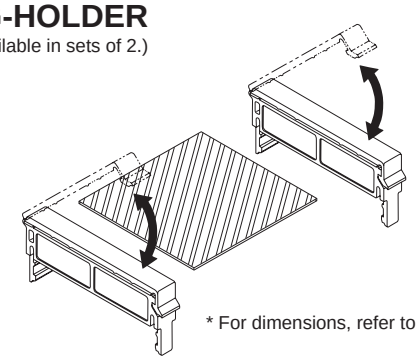

* For dimensions, refer to the next page.

[Tag plate]

N4G2 - TAG-PLATE - Ⓐ - 200

Ⓐ Type *1		Ⓑ Length (mm) *2
A	For 4GA2	200
B	For 4G$^{B}_{Z}$2	300
		400

*1: Select B for MW4GZ2.
*2: [Length] Select from 200, 300 and 400 mm and cut to the product length.
*3: Tag plate cannot be attached if a spacer is mounted.

Dimensions

MW4GA2

● Tag plate (TAG)

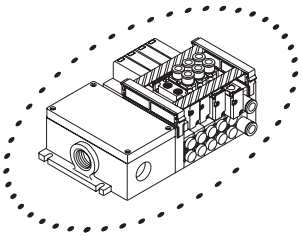

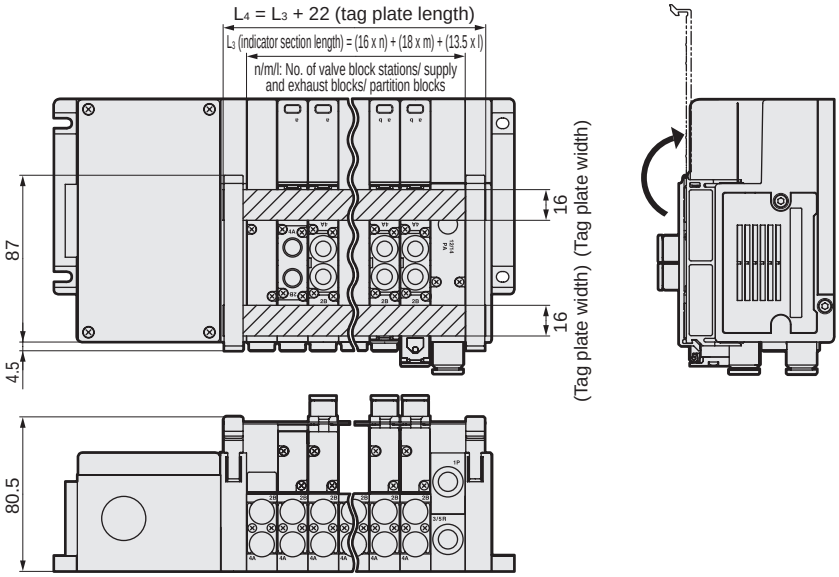

MW4G$^{B}_{Z}$2

● Tag plate (TAG)

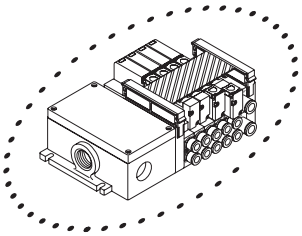

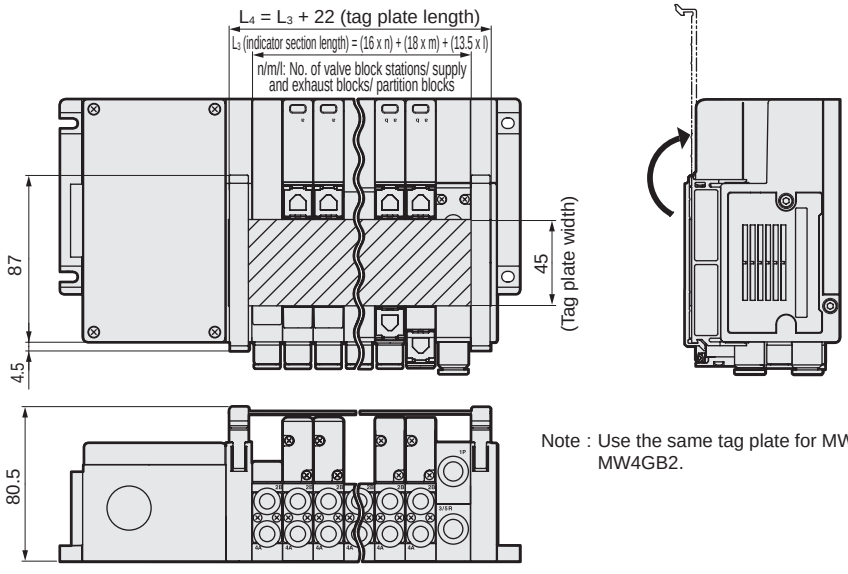

Note : Use the same tag plate for MW4GZ2 and MW4GB2.

Table 1: Formula of L_3 (indicator section length)

L_3=(16xn)+(18xm)+(13.5xl)
n : number of valve blocks
m : number of supply and exhaust blocks
l : number of partition blocks

Related products

Tie rod, silencer, blanking plug, masking plate kit, DIN rail and DIN rail mounting bracket kit

● Tie rod

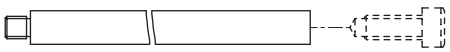

W4G2 - TR - V1

Ⓐ Type

Ⓐ Type	
V1	For 1-station valve block (2)
Q	For supply and exhaust block (2)
S	For partition block (2)
M	For I/O block (2)

● Silencer

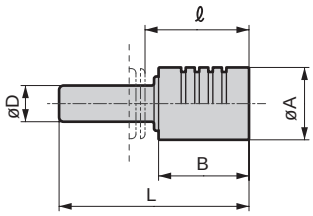

Model No.	D	B	L	ℓ	A
SLW-H8	ø8	20	42	23	16
SLW-H10	ø10	27	53	34	20

● Blanking plug

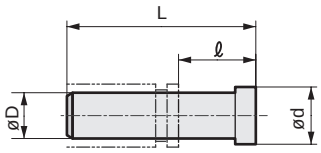

Model No.	D	L	ℓ	d
GWP 4-B	ø4	27	11	6
GWP 6-B	ø6	29	11.5	8
GWP 8-B	ø8	33	14	10
GWP 10-B	ø10	40	18.5	12

● Masking plate kit

W4G2-MP

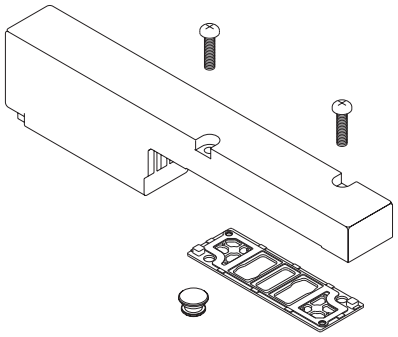

* Kit contents: Masking plate, gasket, PR plug, 2 mounting screws

● DIN rail

N4G-BAA (length)

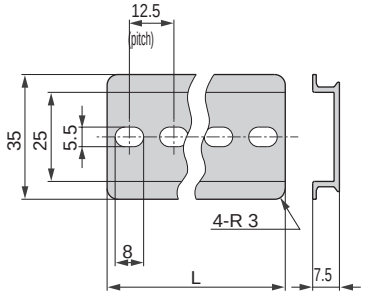

*** Set the DIN rail length, referring to the formula (appendix table) on page 1096.**

● DIN rail mounting bracket kit

W4G2-D

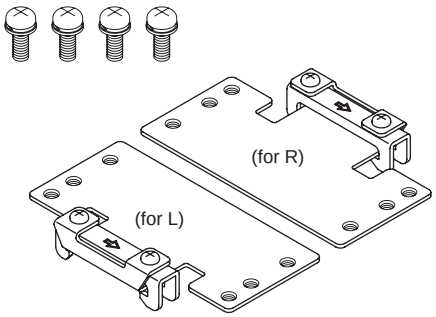

* One DIN rail mounting bracket kit set is for one manifold.
(A kit includes two mounting brackets and four mounting screws.)

Parts for I/O block

● Waterproof cap

Model No.	Description
W4G-XSZ-11	Provides jet-proof protection of the power supply connector when the power supply is shared with the serial transmission device

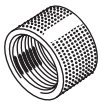

(Reference value)
Tightening torque 0.4 to 0.5 N·m

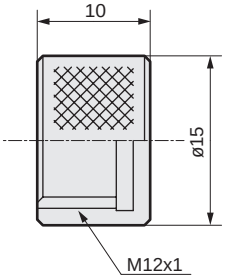

● Waterproof plug

Model No.	Description
W4G-XSZ-12	Provides jet-proof protection of unused signal connectors.



(Reference value)
Tightening torque 0.4 to 0.5 N·m

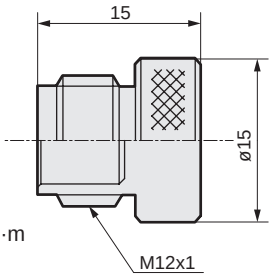

● Parts for multi-connector

● Multi-connector (wiring method T20) cable

[Cable with connector]

W4G - RMC - 3

Ⓐ Cable length

Ⓐ Cable length	
1	1 m
3	3 m
5	5 m

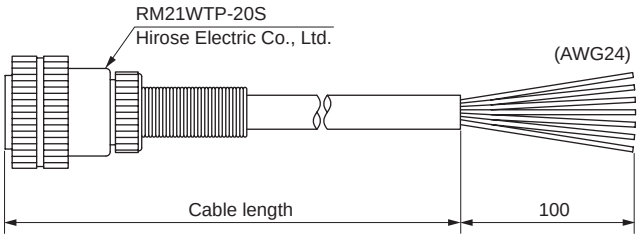

Terminal No. and cores

Terminal No.		1	2	3	4	5	6	7	8	9	10
Core	Wire color	White	Brown	Green	Yellow	Gray	Pink	Blue	Red	Black	Purple
I.D.	Mark tube No.	1	2	3	4	5	6	7	8	9	10
Terminal No.		**11**	**12**	**13**	**14**	**15**	**16**	**17**	**18**	**19**	**20**
Core	Wire color	Gray/pink	Red/blue	White/green	Brown/green	White/yellow	Yellow/brown	White/gray	Gray/brown	(None)	(None)
I.D.	Mark tube No.	11	12	13	14	15	16	17	18	(None)	(None)

[Connector only]

W4G - RM21WTP - 10

Ⓐ Applicable cable diameter

Ⓐ Applicable cable diameter	
8	ø8
10	ø10
12	ø12

Note : Clamping force and waterproof performance of applicable cables may differ depending on their types. Therefore, check before use.

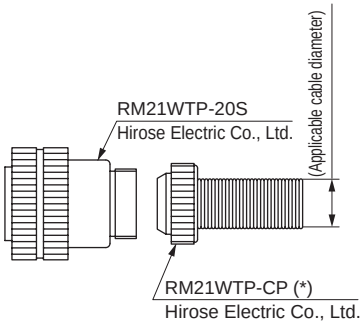

* For connectors for serial transmission device unit and I/O block, refer to pages 1088 to 1091.

How to order

Cable with D-sub-connector model No.

N4T-CABLE-D0 (0) - (1)

* Each pneumatic valve model can be used for D-sub-connector T30 type.

Ⓐ User interface

Ⓑ Cable length

Code	Description	Model No. N4T
Ⓐ User interface		
0	Cut only	●
1	With round terminal for M3.5 screw	●
Ⓑ Cable length		
1	1 m	●
3	3 m	●
5	5 m	●

D-sub-connector terminal No. and conductor

● N4T-CABLE-D00-Ⓑ

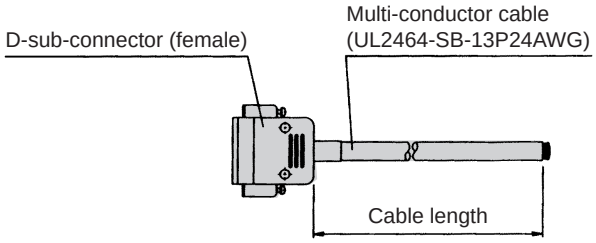

D-sub-connector terminal No.		1	2	3	4	5	6	7	8	9	10	11	12	13
Core identification	Insulator color	Orange	Orange	Yellow	Yellow	Green	Green	Gray	Gray	White	White	Orange	Orange	Yellow
	Marker	1 point	1 point	1 point	1 point	1 point	1 point	1 point	1 point	1 point	1 point	2 points	2 points	2 points
	Mark color	Black	Red	Black	Red	Black	Red	Black	Red	Black	Red	Black	Red	Black
D-sub-connector terminal No.		**14**	**15**	**16**	**17**	**18**	**19**	**20**	**21**	**22**	**23**	**24**	**25**	
Core identification	Insulator color	Yellow	Green	Green	Gray	Gray	White	White	Orange	Orange	Yellow	Yellow	Green	
	Marker	2 points	2 points	2 points	2 points	2 points	2 points	2 points	3 points	3 points	3 points	3 points	3 points	
	Mark color	Red	Black	Red	Black	Red	Black	Red	Black	Red	Black	Red	Black	

● N4T-CABLE-D01-Ⓑ

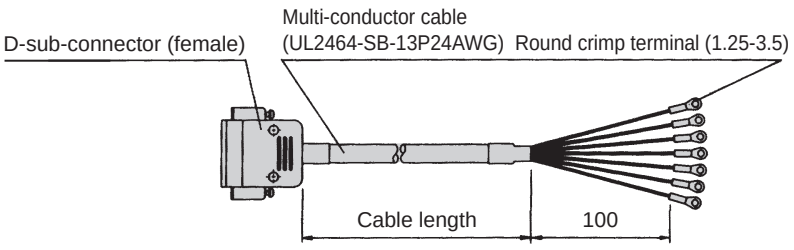

D-sub-connector terminal No.		1	2	3	4	5	6	7	8	9	10	11	12	13
Core identification	Insulator color	Orange	Orange	Yellow	Yellow	Green	Green	Gray	Gray	White	White	Orange	Orange	Yellow
	Marker	1 point	1 point	1 point	1 point	1 point	1 point	1 point	1 point	1 point	1 point	2 points	2 points	2 points
	Mark color	Black	Red	Black	Red	Black	Red	Black	Red	Black	Red	Black	Red	Black
Mark tube No.		1	2	3	4	5	6	7	8	9	10	11	12	13
D-sub-connector terminal No.		**14**	**15**	**16**	**17**	**18**	**19**	**20**	**21**	**22**	**23**	**24**	**25**	
Core identification	Insulator color	Yellow	Green	Green	Gray	Gray	White	White	Orange	Orange	Yellow	Yellow	Green	
	Marker	2 points	2 points	2 points	2 points	2 points	2 points	2 points	3 points	3 points	3 points	3 points	3 points	
	Mark color	Red	Black	Red	Black	Red	Black	Red	Black	Red	Black	Red	Black	
Mark tube No.		14	15	16	17	18	19	20	21	22	23	24	25	

* Up to 24 points can be used. Cut the wires for surplus points before use.

MEMO

Internal structure and parts list

NW3GA210 (Body piping)

● 2-position single: normally closed

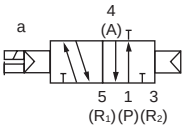

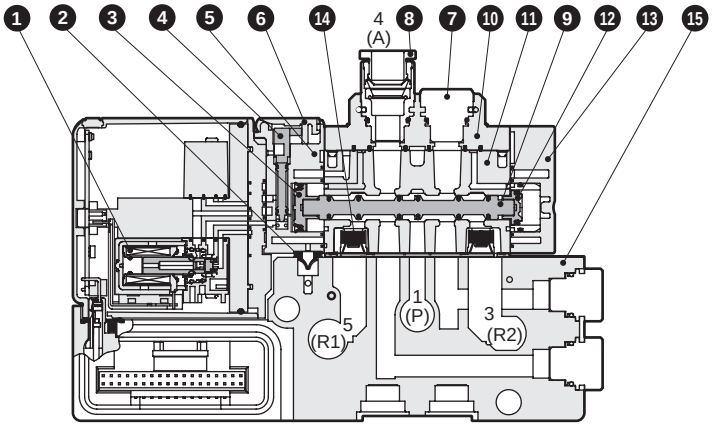

NW3GA2110

● 2-position single: Normally open

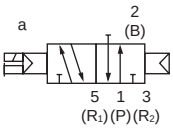

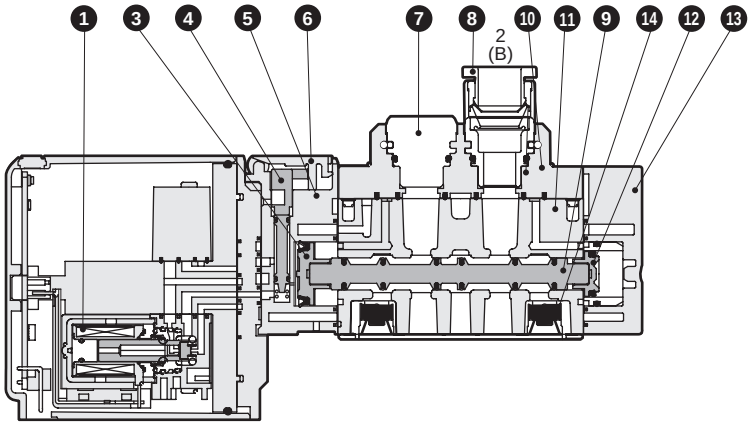

Main parts list

No.	Part name	Material
1	Coil assembly	-
2	Pilot exhaust check valve	Hydrogenated nitrile rubber
3	Piston D assembly	-
4	Manual override	Resin
5	Piston chamber	Resin
6	Manual protection cover	Resin
7	Plug cartridge	Aluminum
8	Cartridge push-in fitting	-
9	Spool assembly	-
10	Fitting adaptor	Resin
11	Body	Aluminum alloy die-casting
12	Piston S assembly	-
13	Cap	Resin
14	Check valve	-
15	Valve block	Resin

No.	Part name		Model No.
8	Cartridge push-in fitting and related parts	ø4 straight	4G2-JOINT-C4
		ø6 straight	4G2-JOINT-C6
		ø8 straight	4G2-JOINT-C8
		Plug cartridge	4G2-JOINT-CPG

Internal structure and parts list

NW4GA210 (Body piping)

● 2-position single

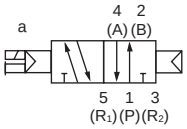

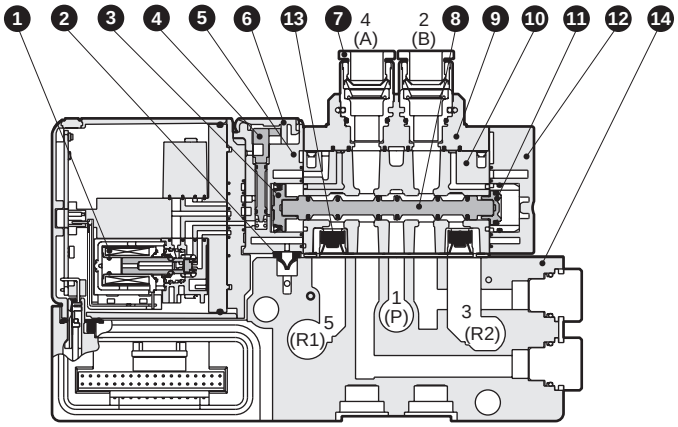

NW4GA220

● 2-position double

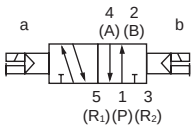

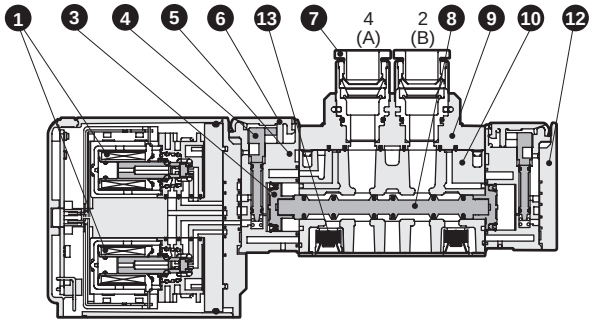

NW4GA2$^{3}_{4}_{5}$0

● 3-position

All ports closed

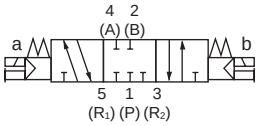

A/B/R connection

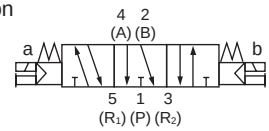

P/A/B connection

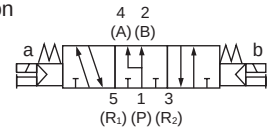

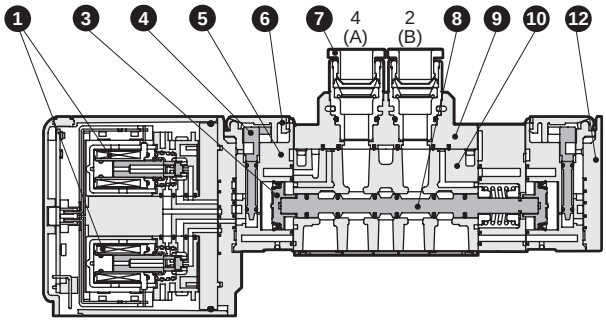

Main parts list

No.	Part name	Material
1	Coil assembly	-
2	Pilot exhaust check valve	Hydrogenated nitrile rubber
3	Piston D assembly	-
4	Manual override	Resin
5	Piston chamber	Resin
6	Manual protection cover	Resin
7	Cartridge push-in fitting	-
8	Spool assembly	-
9	Fitting adaptor	Resin
10	Body	Aluminum alloy die-casting
11	Piston S assembly	-
12	Cap	Resin
13	Check valve	-
14	Valve block	Resin

No.	Part name		Model No.
7	Cartridge push-in fitting and related parts	ø4 straight	4G2-JOINT-C4
		ø6 straight	4G2-JOINT-C6
		ø8 straight	4G2-JOINT-C8
		Plug cartridge	4G2-JOINT-CPG

Internal structure and parts list

NW4GB210 (Base side piping)

● 2-position single

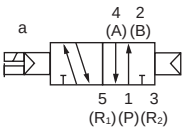

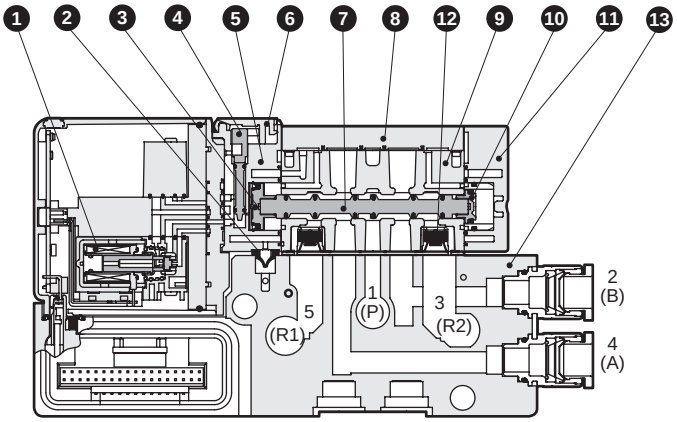

NW4GZ210 (Base bottom piping) * The solenoid valve is the same as NW4GB210.

● 2-position single

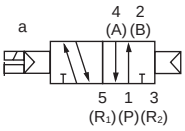

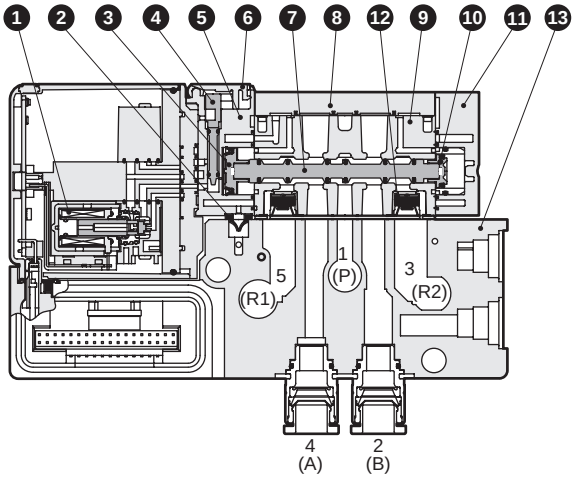

W4GB210 (Single base piping) * The solenoid valve is the same as NW4GB210.

● 2-position single

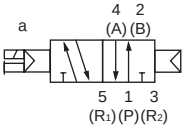

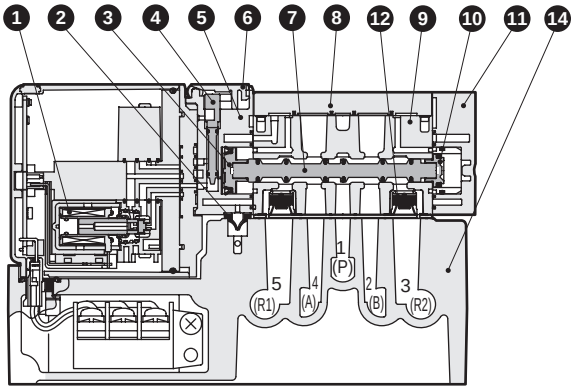

Main parts list

No.	Part name	Material	No.	Part name	Material
1	Coil assembly	-	8	Plate	Resin
2	Pilot exhaust check valve	Hydrogenated nitrile rubber	9	Body	Aluminum alloy die-casting
3	Piston D assembly	-	10	Piston S assembly	-
4	Manual override	Resin	11	Cap	Resin
5	Piston chamber	Resin	12	Check valve	-
6	Manual protection cover	Resin	13	Valve block	Resin
7	Spool assembly	-	14	Sub-plate	Aluminum alloy die-casting

Internal structure and parts list

NW4G$^{B}_{Z}$220/W4GB220

● 2-position double

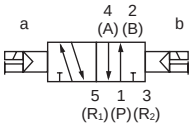

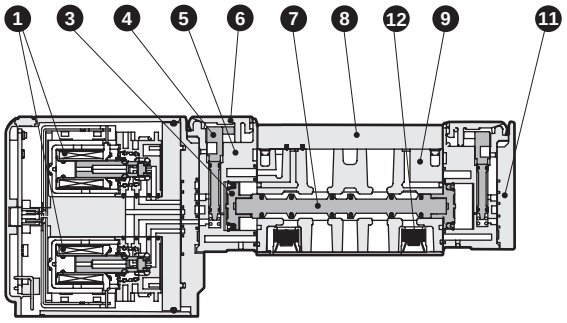

NW4G$^{B}_{Z}$2$^{3}_{4}$0/W4GB2$^{3}_{4}$0

● 3-position

All ports closed

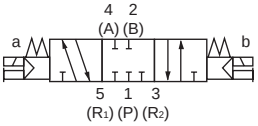

A/B/R connection

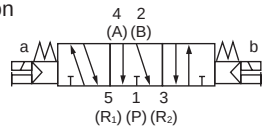

P/A/B connection

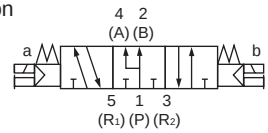

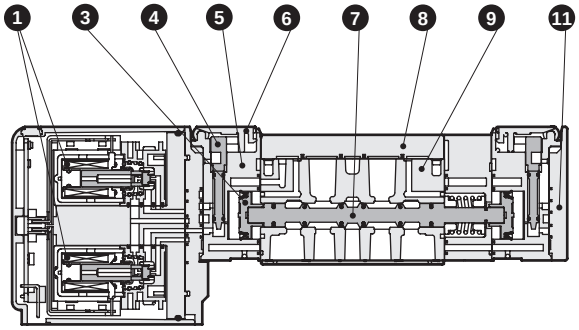

Main parts list

No.	Part name	Material	No.	Part name	Material
1	Coil assembly	-	7	Spool assembly	-
2	Pilot exhaust check valve	Hydrogenated nitrile rubber	8	Plate	Resin
3	Piston D assembly	-	9	Body	Aluminum alloy die-casting
4	Manual override	Resin	10	Piston S assembly	-
5	Piston chamber	Resin	11	Cap	Resin
6	Manual protection cover	Resin	12	Check valve	-

(1) The cylinder average speed is obtained from the combination of 4G Series and piping system. It is expressed as the cylinder's piston speed calculated by dividing the stroke length by the time that the piston rod takes from start to end of movement with the cylinder rod installed facing upward. When the load factor is 50%, the average speed should be approximately the cylinder's piston speed multiplied by 0.5.
(2) The cylinder average speed described in "Pneumatic system device selection guide" is that when one cylinder is operated alone.
(3) The effective cross-sectional area of the solenoid valve used for the calculation below is the 2-position value.
(4) This selection guide is for reference. With the CKD sizing program, confirm conditions to be actually used.
(5) The effective cross-sectional area S and sonic conductance C are converted as S ≈ 5.0 x C.

Standard system table (with internal check valve)

1. Common exhaust

Valve port size	System No.	Speed controller	Cylinder piping Pipe length 1 m	Common exhaust piping	Composite effective sectional area (mm^2)
C4	A1	SC3W-6-4	ø4xø2.5	ø8xø5.7x3 m	1.5
C6	B1	SC3W-6-6	ø6xø4	ø8xø5.7x3 m	2.8
C6	B2	SC1-6	ø6xø4	ø8xø5.7x3 m	4.0
C8	B3	SC1-8	ø8xø5.7	ø8xø5.7x3 m	5.5

2. Atmospheric release exhaust (integrated exhaust muffler)

Valve port size	System No.	Speed controller	Cylinder piping Pipe length 1 m	Common exhaust piping	Composite effective sectional area (mm^2)
C4	A2	SC3W-6-4	ø4xø2.5	NW4G2-EX	1.6
C6	B4	SC3W-6-6	ø6xø4	NW4G2-EX	3.0
C6	B5	SC1-6	ø6xø4	NW4G2-EX	4.3
C8	B6	SC1-8	ø8xø5.7	NW4G2-EX	6.6

3. Exhaust with silencer

Valve port size	System No.	Speed controller	Cylinder piping Pipe length 1 m	Common exhaust piping	Composite effective sectional area (mm^2)
C4	A3	SC3W-6-4	ø4xø2.5	SLW-H8	1.5
C6	B7	SC3W-6-6	ø6xø4	SLW-H8	2.8
C6	B8	SC1-6	ø6xø4	SLW-H8	3.8
C8	B9	SC1-8	ø8xø5.7	SLW-H10	6.4

1. Common exhaust

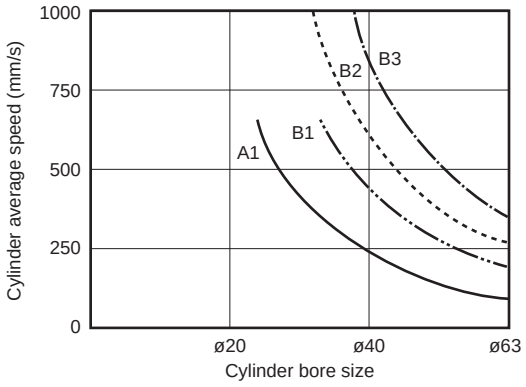

2. Atmospheric release exhaust (integrated exhaust muffler)

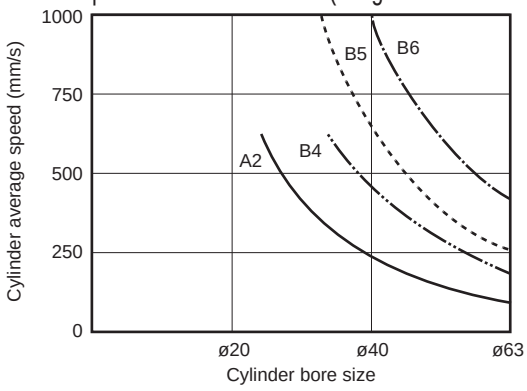

3. Exhaust with silencer

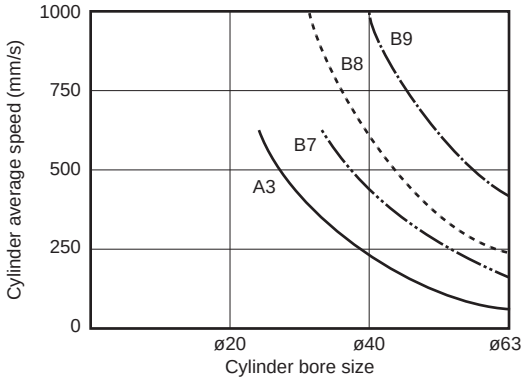

● Silencer

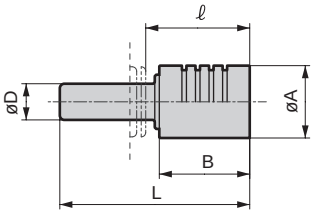

Model No.	D	B	L	ℓ	A
SLW-H8	ø8	20	42	23	16
SLW-H10	ø10	27	53	34	20

How to use the guide

Device selection guide is used to select the optimum model at a glance.

● Fluid control components selection

Whether the cylinder bore size and cylinder being used are driven with relative high or low speed is determined as a condition. Using the table shown below as a reference, select the theoretical reference speed of the cylinder.

Degree of cylinder speed	Theoretical reference speed (mm/s)
Low speed	250
Medium speed	500
High speed	750
Ultra high speed	1,000

Using the table in the device selection guide 1 (next page), select the equivalent bore size of cylinder tube and the proper standard system No. corresponding to theoretical reference speed.

Explanation of technical terms

● Theoretical reference speed: indicates degree of cylinder speed, expressed as the following formula. (This value matches speed with no load. When load is applied, speed drops considerably.)

$$vo=1920\times\frac{S}{A}=2445\times\frac{S}{D^2} \quad \text{(1)}$$

vo: Theoretical reference speed (mm/s)
A: Cylinder sectional area (cm^2)
S: Composite effective cross-sectional area of circuit (exhaust air side) (mm^2)
D: Cylinder bore size (cm)

When expressed as a graph, the theoretical reference speed is the speed within the range where the cylinder moves at a uniform speed

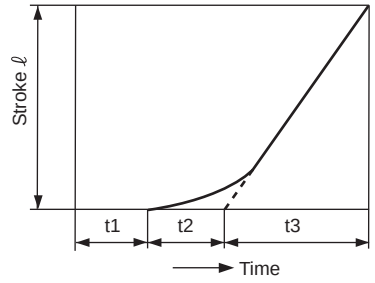

$$vo=\frac{\ell}{t3}\text{(A/s)}$$

t1 : Time until movement starts
t2 : Time of primary delay
t3 : Operating time with constant velocity
ℓ : Stroke length

● Note: t1 and t2 differ depending on load.
Can be effectively ignored with no load.

● Required flow rate: indicates instantaneous flow rate for operating a cylinder with velocity vo, expressed with the following formula. Values in the table are when P = 0.5 MPa. The required flow rate is a value necessary to select clean air system components.

$$Q=\frac{Avo\,(P+0.101)\times 60}{0.101\times 10^4}=\left\{\frac{Avo\,(P+1.03)\times 60}{1.03\times 10^4}\right\} \quad \text{(2)}$$

Q: Required flow rate (RX) (ANR)
P: Supply pressure (MPa)

● Required effective sectional area: indicates composite effective cross sectional area for the exhaust circuit required for moving the cylinder at speed vo. (Composite effective cross-sectional area of valve, speed controller, silencer or piping)

● Proper standard system: indicates the most appropriate combination of valve, speed controller, silencer and bore size for operating a cylinder with velocity *vo*. The combination in the table is for a pipe length of 1 m.

Calculation method of flow rate

Depending on the actual unit, they are shown as follows.

Choked flow when $\frac{P_2+0.1}{P_1+0.1}\le b$

$$Q=600\times C(P_1+0.1)\sqrt{\frac{293}{273+t}} \quad \text{.....(1)}$$

Subsonic flow when $\frac{P_2+0.1}{P_1+0.1}> b$

$$Q=600\times C(P_1+0.1)\sqrt{1-\left[\frac{\frac{P_2+0.1}{P_1+0.1}-b}{1-b}\right]^2}\sqrt{\frac{293}{273+t}} \quad \text{.....(2)}$$

Q : Air flow rate [dm^3/min(ANR)], SI unit dm^3 (cubic decimeter) can also be expressed with ℓ (liter). 1 dm^3 = 1ℓ
C : Sonic conductance [dm^3/(s·bar)]
b : Critical pressure ratio [-]
P_1 : Upstream pressure [MPa]
P_2 : Downstream pressure [MPa]
t : Temperature [°C]

When calculating with effective cross-sectional area S, substitute value C obtained with C = S/5 in the above formula.
For subsonic flow, substitute b = 0.5 in formula (2).

[Device selection guide 1]

Cylinder Bore size (mm)	Theoretical reference speed (mm/s)	Required flow rate (lmin)(ANR)	Required effective sectional area (mm^2)	Proper standard system No.		
				1. Common exhaust	2. Atmospheric release exhaust	3. Exhaust with silencer
ø 6	(500)	-	(0.1)	A1	A2	A3
ø10	(500)	-	(0.2)	A1	A2	A3
ø16	(500)	-	(0.5)	A1	A2	A3
ø20	250	29	0.5	A1	A2	A3
	400	46	1.6	B1	A2	B7
ø25	250	44	0.8	A1	A2	A3
	400	70	1.9	B1	B4	B7
ø30	250	64	1.1	A1	A2	A3
	400	100	2.8	B2	B4	B7
ø32	250	73	1.3	A1	A2	A3
	400	120	3.1	B2	B5	B8
ø40	250	110	1.7	B1	B4	B7
	500	230	3.3	B2	B5	B8
	750	340	5.0	B3	B6	B9
	1000	450	6.6	-	B6	-
ø50	250	280	2.6	B1	B4	B7
	500	560	5.2	B3	B6	B9
	750	840	7.7	-	-	-
	1000	1100	10.4	-	-	-
ø63	250	450	4.1	B3	B5	B9
	500	910	8.2	-	-	-
	750	1400	12.3	-	-	-
	1000	1800	16.4	-	-	-

* Refer to page 1070 for system No.

[Effective cross-sectional area]

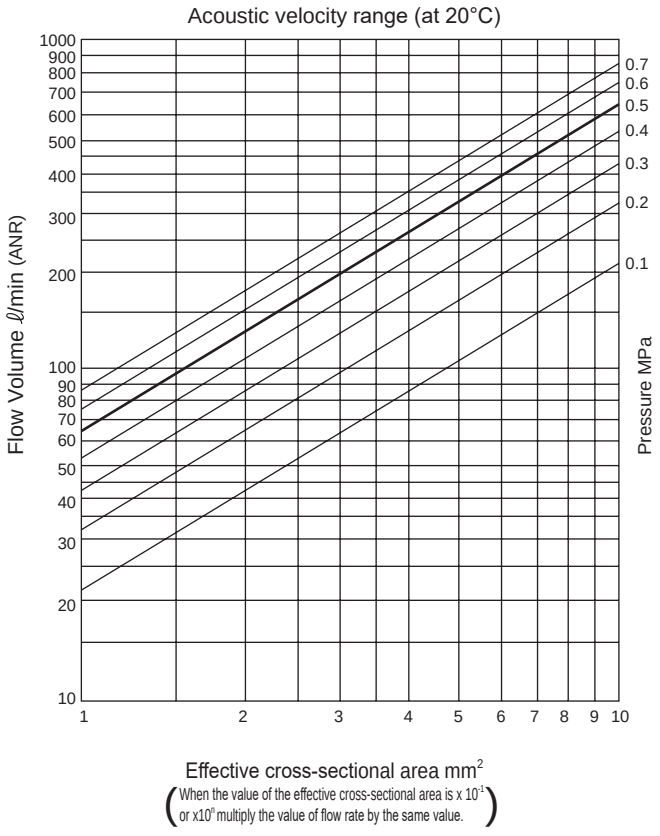

[Clean air system components]

Clean air system components

Part name	Model No.	Port size	Max. flow (ℓ/min atm press conv)
F.R.L. kit	**C1000-6-W**	Rc1/8	450
	C1000-8-W	Rc1/4	630
	C3000-8-W	Rc1/4	1280
	C3000-10-W	Rc3/8	1750
	C4000-8-W	Rc1/4	1430
	C4000-10-W	Rc3/8	2400
	C4000-15-W	Rc1/2	3000
F.R. unit	**W1000-6-W**	Rc1/8	830
	W1000-8-W	Rc1/4	1150
	W3000-8-W	Rc1/4	2150
	W3000-10-W	Rc3/8	2430
	W4000-8-W	Rc1/4	2500
	W4000-10-W	Rc3/8	4350
	W4000-15-W	Rc1/2	4750
Air filter (F)	**F1000-6-W**	Rc1/8	460
	F1000-8-W	Rc1/4	610
	F3000-8-W	Rc1/4	1230
	F3000-10-W	Rc3/8	1500
	F4000-8-W	Rc1/4	1320
	F4000-10-W	Rc3/8	2140
	F4000-15-W	Rc1/2	3000
Regulator (R)	**R1000-6-W**	Rc1/8	770
	R1000-8-W	Rc1/4	1350
	R3000-8-W	Rc1/4	2000
	R3000-10-W	Rc3/8	2600
	R4000-8-W	Rc1/4	2500
	R4000-10-W	Rc3/8	4400
	R4000-15-W	Rc1/2	5000
Lubricator (L)	**L1000-6-W**	Rc1/8	550
	L1000-8-W	Rc1/4	700
	L3000-8-W	Rc1/4	1100
	L3000-10-W	Rc3/8	2250
	L4000-8-W	Rc1/4	1000
	L4000-10-W	Rc3/8	1700
	L4000-15-W	Rc1/2	2700

Note) Max. flow rate: For FRL, FR and R, flow rate at 0.7 MPa primary pressure, 0.5 MPa set pressure, 0.1 MPa pressure drop. For air filter, flow rate at 0.7 MPa primary pressure, 0.02 MPa pressure drop. For lubricator, flow rate at 0.5 MPa primary pressure, 0.03 MPa pressure.

MEMO

Common terminal box (wiring method T10)

Notes on wiring

[Precautions for common terminal box (T10)]

(1) With the common terminal box, the common wiring is internally processed beforehand. When using the independent contact PLC output unit, wire the common wires at the contact section.
(2) Check the correspondence of the number of stations with solenoid positions to prevent incorrect wiring. (Refer to the table below.)
(3) Note that the correspondence will not function if the number of solenoid stations exceeds 18.
(4) The manifold station numbers are set in order from left with the piping port facing forward.
(5) A voltage drop may occur due to simultaneous energizing or cable length. Confirm that the voltage drop for the solenoid is within 10% of the rated voltage.

Internal wiring of wiring method T10 (up to 18 solenoid stations)

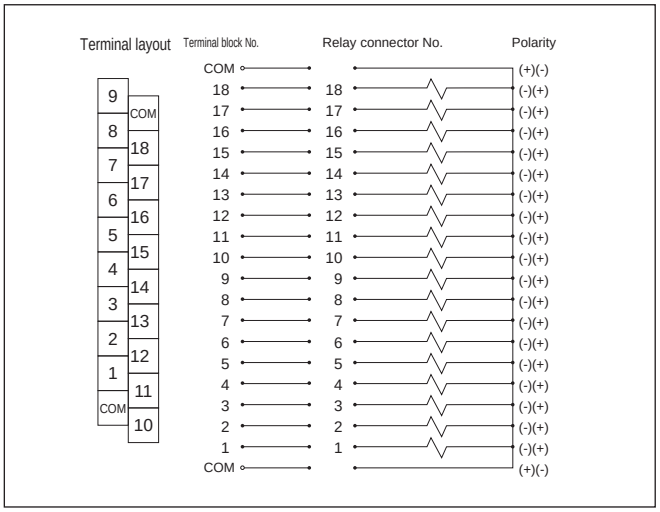

T10 (left side specifications)

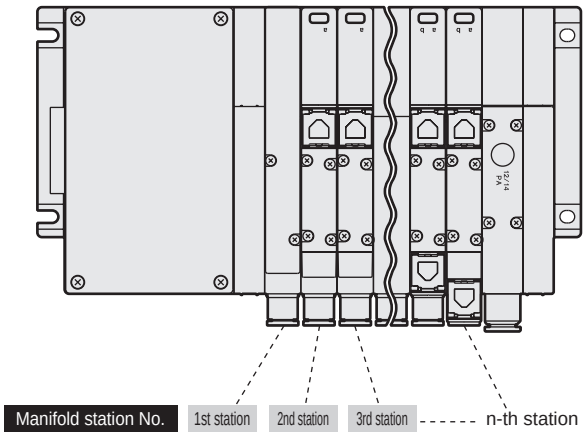

Terminal array of wiring method T10 (example)

*: The numerals of valve numbers 1a, 1b, 2a, 2b ... indicate the order of stations first station, second station... and the letters “a” and “b” indicate the “a side” solenoid and “b side” solenoid, respectively. The manifold’s max. station number differs depending on the model. Check the specifications of each model.

Terminal No.

COM	18	17	16	15	14	13	12	11	10
9	8	7	6	5	4	3	2	1	COM

[Standard wiring]

● For single solenoid valve

(MF station No. max. 18 stations)

Term. block No.	COM	18	17	16	15	14	13	12	11	10
Valve No.	COM	18a	17a	16a	15a	14a	13a	12a	11a	10a
Term. block No.	**9**	**8**	**7**	**6**	**5**	**4**	**3**	**2**	**1**	**COM**
Valve No.	9a	8a	7a	6a	5a	4a	3a	2a	1a	COM

● For double solenoid valve

(MF station No. max. 9 stations)

Term. block No.	COM	18	17	16	15	14	13	12	11	10
Valve No.	COM	9b	9a	8b	8a	7b	7a	6b	6a	5b
Term. block No.	**9**	**8**	**7**	**6**	**5**	**4**	**3**	**2**	**1**	**COM**
Valve No.	5a	4b	4a	3b	3a	2b	2a	1b	1a	COM

● For mixed use (single/double mixture)

(Number of solenoid valves up to 18 points)

Term. block No.	COM	18	17	16	15	14	13	12	11	10
Valve No.	COM	(Blank)	(Blank)	(Blank)	(Blank)	9b	9a	8b	8a	7b
Term. block No.	**9**	**8**	**7**	**6**	**5**	**4**	**3**	**2**	**1**	**COM**
Valve No.	7a	6a	5b	5a	4b	4a	3a	2a	1a	COM

[Double wiring]

(MF station No. max. 9 stations)

Term. block No.	COM	18	17	16	15	14	13	12	11	10
Valve No.	COM	(Blank)	9a	(Blank)	8a	(Blank)	7a	(Blank)	6a	(Blank)
Term. block No.	**9**	**8**	**7**	**6**	**5**	**4**	**3**	**2**	**1**	**COM**
Valve No.	5a	(Blank)	4a	(Blank)	3a	(Blank)	2a	(Blank)	1a	COM

(MF station No. max. 9 stations)

Term. block No.	COM	18	17	16	15	14	13	12	11	10
Valve No.	COM	9b	9a	8b	8a	7b	7a	6b	6a	5b
Term. block No.	**9**	**8**	**7**	**6**	**5**	**4**	**3**	**2**	**1**	**COM**
Valve No.	5a	4b	4a	3b	3a	2b	2a	1b	1a	COM

(Number of solenoid valves up to 18 points)

Term. block No.	COM	18	17	16	15	14	13	12	11	10
Valve No.	COM	9b	9a	8b	8a	7b	7a	(Blank)	6a	5b
Term. block No.	**9**	**8**	**7**	**6**	**5**	**4**	**3**	**2**	**1**	**COM**
Valve No.	5a	4b	4a	(Blank)	3a	(Blank)	2a	(Blank)	1a	COM

Multi-connector (wiring method T20)

Notes on wiring

[Precautions for multi-connector (T20)]

(1) With the common terminal box, the common wiring is internally processed beforehand. When using the independent contact PLC output unit, wire the common wires at the contact section.
(2) Check the correspondence of the number of stations with solenoid positions to prevent incorrect wiring. (Refer to the table below.)
(3) Note that the correspondence will not function if the number of solenoid stations exceeds 16.
(4) The manifold station numbers are set in order from left with the piping port facing forward.
(5) A voltage drop may occur due to simultaneous energizing or cable length. Confirm that the voltage drop for the solenoid is within 10% of the rated voltage.

Internal wiring of wiring method T20 (up to 16 solenoid stations)

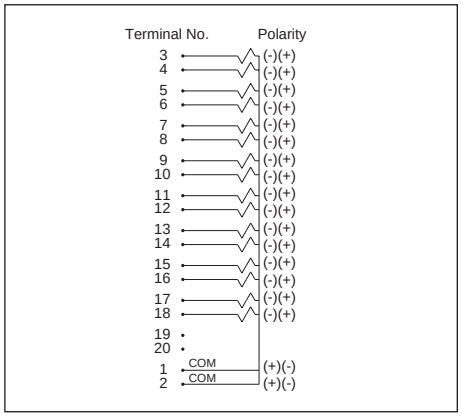

T20 (left side specifications)

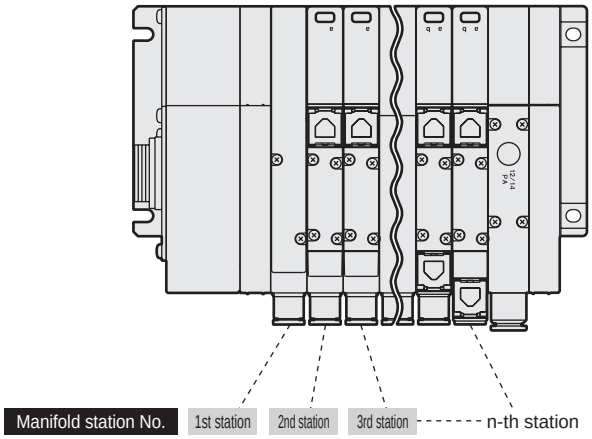

Terminal array of wiring method T20 (example)

*: The numerals of valve numbers 1a, 1b, 2a, 2b ... indicate the order of stations first station, second station... and the letters “a” and “b” indicate the “a side” solenoid and “b side” solenoid, respectively. The manifold’s max. station number differs depending on the model. Check the specifications of each model. In addition, T20 is only available with double wiring.

Terminal No.

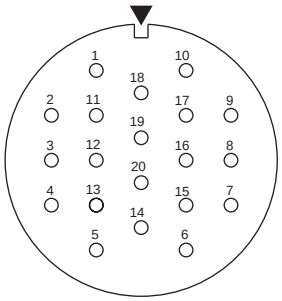

[Double wiring]

● For single solenoid valve

(MF station No. max. 8 stations)

Terminal No.	20	19	18	17	16	15	14	13	12	11
Valve No.	(None)	(None)	(Blank)	8a	(Blank)	7a	(Blank)	6a	(Blank)	5a
Terminal No.	**10**	**9**	**8**	**7**	**6**	**5**	**4**	**3**	**2**	**1**
Valve No.	(Blank)	4a	(Blank)	3a	(Blank)	2a	(Blank)	1a	COM	COM

● For double solenoid valve

(MF station No. max. 8 stations)

Terminal No.	20	19	18	17	16	15	14	13	12	11
Valve No.	(None)	(None)	8b	8a	7b	7a	6b	6a	5b	5a
Terminal No.	**10**	**9**	**8**	**7**	**6**	**5**	**4**	**3**	**2**	**1**
Valve No.	4b	4a	3b	3a	2b	2a	1b	1a	COM	COM

● For mixed use (single/double mixture)

(MF station No. max. 8 stations)

Terminal No.	20	19	18	17	16	15	14	13	12	11
Valve No.	(None)	(None)	8b	8a	(Blank)	7a	6b	6a	5b	5a
Terminal No.	**10**	**9**	**8**	**7**	**6**	**5**	**4**	**3**	**2**	**1**
Valve No.	4b	4a	(Blank)	3a	2b	2a	(Blank)	1a	COM	COM

D-sub-connector (Wiring method T30)

Notes on wiring

[T30 Connectors]

The connector used for T30 wiring, called a D-sub-connector, is used widely for FA and OA devices. The 25P in particular is also an RS-232-C Standards designated connector, used for personal computer communication. The manifold station numbers are set in order from left with the piping port facing forward.

[Precautions for connector T30]

(1) Signal arrays of the PLC output unit must match signal arrays on the valve side.
(2) The working power is 12/24 VDC dedicated.
(3) A voltage drop may occur due to simultaneous energizing or cable length. Confirm that the voltage drop for the solenoid is within 10% of the rated voltage.

Internal wiring of wiring method T30 (up to 24 solenoid stations)

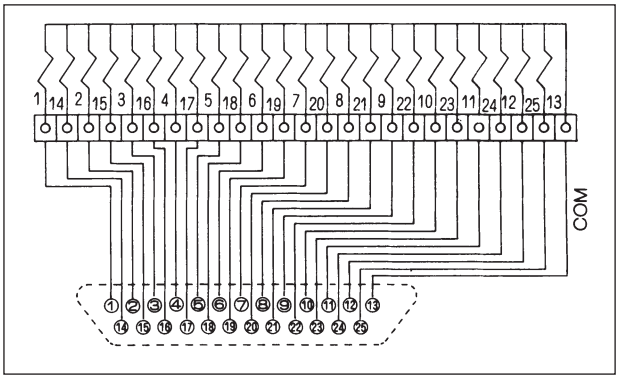

T30 (left side specifications)

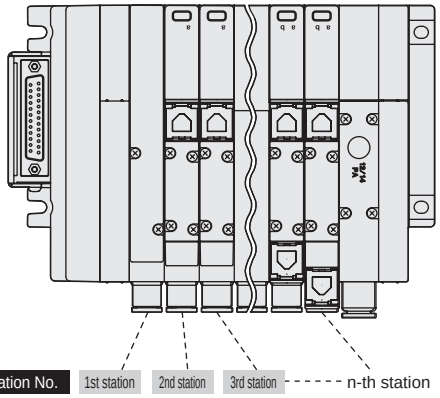

T30 connector pin array (example)

*: The numerals of valve numbers 1a, 1b, 2a, 2b ... indicate the order of stations first station, second station... and the letters “a” and “b” indicate the “a side” solenoid and “b side” solenoid, respectively.
The manifold’s max. station number differs depending on the model.
Check the specifications of each model.

Connector pin No.



● For single solenoid valve

[Standard wiring]

Pin No.	1	2	3	4	5	6	7	8	9	10	11	12	13
Valve No.	1a	3a	5a	7a	9a	11a	13a	15a	17a	19a	21a	23a	COM
Pin No.	**14**	**15**	**16**	**17**	**18**	**19**	**20**	**21**	**22**	**23**	**24**	**25**	
Valve No.	2a	4a	6a	8a	10a	12a	14a	16a	18a	20a	22a	24a	

[Double wiring]

Pin No.	1	2	3	4	5	6	7	8	9	10	11	12	13
Valve No.	1a	2a	3a	4a	5a	6a	7a	8a	9a	10a	11a	12a	COM
Pin No.	**14**	**15**	**16**	**17**	**18**	**19**	**20**	**21**	**22**	**23**	**24**	**25**	
Valve No.	(Blank)	(Blank)	(Blank)	(Blank)	(Blank)	(Blank)	(Blank)	(Blank)	(Blank)	(Blank)	(Blank)	(Blank)	

● For double solenoid valve

[Standard wiring]

Pin No.	1	2	3	4	5	6	7	8	9	10	11	12	13
Valve No.	1a	2a	3a	4a	5a	6a	7a	8a	9a	10a	11a	12a	COM
Pin No.	**14**	**15**	**16**	**17**	**18**	**19**	**20**	**21**	**22**	**23**	**24**	**25**	
Valve No.	1b	2b	3b	4b	5b	6b	7b	8b	9b	10b	11b	12b	

[Double wiring]

Pin No.	1	2	3	4	5	6	7	8	9	10	11	12	13
Valve No.	1a	2a	3a	4a	5a	6a	7a	8a	9a	10a	11a	12a	COM
Pin No.	**14**	**15**	**16**	**17**	**18**	**19**	**20**	**21**	**22**	**23**	**24**	**25**	
Valve No.	1b	2b	3b	4b	5b	6b	7b	8b	9b	10b	11b	12b	

● For mixed use (single/double mixture)

[Standard wiring]

Pin No.	1	2	3	4	5	6	7	8	9	10	11	12	13
Valve No.	1a	3a	4a	5a	7a	8a	10a	11b	12b	14a	15b	17a	COM
Pin No.	**14**	**15**	**16**	**17**	**18**	**19**	**20**	**21**	**22**	**23**	**24**	**25**	
Valve No.	2a	3b	4b	6a	7b	9a	11a	12a	13a	15a	16a	17b	

[Double wiring]

Pin No.	1	2	3	4	5	6	7	8	9	10	11	12	13
Valve No.	1a	2a	3a	4a	5a	6a	7a	8a	9a	10a	11a	12a	COM
Pin No.	**14**	**15**	**16**	**17**	**18**	**19**	**20**	**21**	**22**	**23**	**24**	**25**	
Valve No.	(Blank)	(Blank)	3b	4b	(Blank)	(Blank)	7b	(Blank)	(Blank)	(Blank)	11b	12b	

Flat cable connector (wiring method T51)

Notes on wiring

[T51 Connectors]

The connector used for T51 wiring method complies with MIL Standards (MIL-C-83503).
Wiring work is simplified with the pressure welded flat cable.
Pin numbers are assigned differently based on the PLC manufacturer, but the function assignment is the same. Arrange using connectors and the triangular mark (▼) in the table below for reference. The triangular mark (▼) is the reference for both plug and socket.
The manifold station numbers are set in order from left with b side solenoid (cap for single) facing forward.

[Precautions for connector (T51)]

(1) Signal arrays of the PLC output unit must match signal arrays on the valve side.
(2) The working power is 12/24 VDC dedicated.
(3) The T51 is driven with a general output unit.
(4) Never connect this manifold to the input unit, as major failures could occur in this device and in peripherals. Be sure to connect the manifold to the output unit.
(5) A voltage drop may occur due to simultaneous energizing or cable length. Confirm that the voltage drop for the solenoid is within 10% of the rated voltage.

Internal wiring of wiring method T51 (up to 18 solenoid stations)

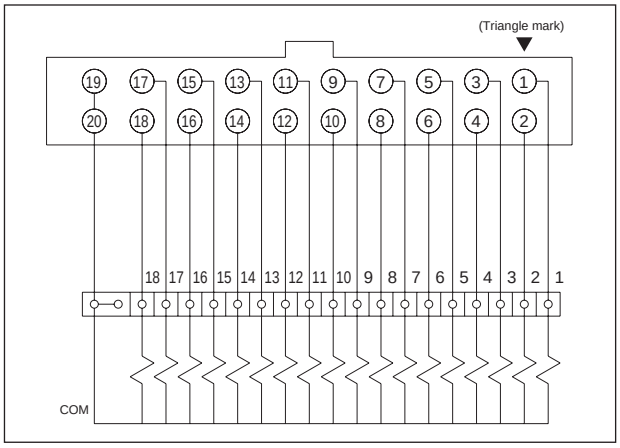

T51 (left side specifications)

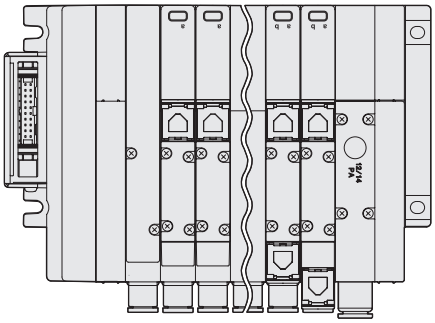



T51 connector pin array (example)

*: The numerals of valve numbers 1a, 1b, 2a, 2b ... indicate the order of stations first station, second station... and the letters “a” and “b” indicate the “a side” solenoid and “b side” solenoid, respectively. The manifold’s max. station number differs depending on the model. Check the specifications of each model.

Connector pin No.

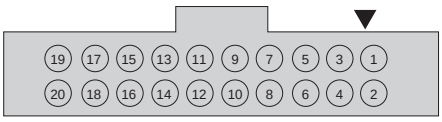

● For single solenoid valve only

[Standard wiring]

Pin No.	19	17	15	13	11	9	7	5	3	1
Valve No.	COM	17a	15a	13a	11a	9a	7a	5a	3a	1a
Pin No.	**20**	**18**	**16**	**14**	**12**	**10**	**8**	**6**	**4**	**2**
Valve No.	COM	18a	16a	14a	12a	10a	8a	6a	4a	2a

[Double wiring]

Pin No.	19	17	15	13	11	9	7	5	3	1
Valve No.	COM	9a	8a	7a	6a	5a	4a	3a	2a	1a
Pin No.	**20**	**18**	**16**	**14**	**12**	**10**	**8**	**6**	**4**	**2**
Valve No.	COM	(Blank)	(Blank)	(Blank)	(Blank)	(Blank)	(Blank)	(Blank)	(Blank)	(Blank)

● For double solenoid valve only

Pin No.	19	17	15	13	11	9	7	5	3	1
Valve No.	COM	9a	8a	7a	6a	5a	4a	3a	2a	1a
Pin No.	**20**	**18**	**16**	**14**	**12**	**10**	**8**	**6**	**4**	**2**
Valve No.	COM	9b	8b	7b	6b	5b	4b	3b	2b	1b

Pin No.	19	17	15	13	11	9	7	5	3	1
Valve No.	COM	9a	8a	7a	6a	5a	4a	3a	2a	1a
Pin No.	**20**	**18**	**16**	**14**	**12**	**10**	**8**	**6**	**4**	**2**
Valve No.	COM	9b	8b	7b	6b	5b	4b	3b	2b	1b

● For mixed use (single/double mixture)

Pin No.	19	17	15	13	11	9	7	5	3	1
Valve No.	COM	12a	11a	10a	8a	7a	5a	4a	3a	1a
Pin No.	**20**	**18**	**16**	**14**	**12**	**10**	**8**	**6**	**4**	**2**
Valve No.	COM	13a	11b	10b	9a	7b	6a	4b	3b	2a

Pin No.	19	17	15	13	11	9	7	5	3	1
Valve No.	COM	9a	8a	7a	6a	5a	4a	3a	2a	1a
Pin No.	**20**	**18**	**16**	**14**	**12**	**10**	**8**	**6**	**4**	**2**
Valve No.	COM	(Blank)	(Blank)	7b	(Blank)	(Blank)	4b	3b	(Blank)	(Blank)

Flat cable connector (wiring method T53)

Notes on wiring

[T53 Connectors]

The connector used for T53 wiring method complies with MIL Standards (MIL-C-83503).
Wiring work is simplified with the pressure welded flat cable.
Pin numbers are assigned differently based on the PLC manufacturer, but the function assignment is the same. Arrange using connectors and the triangular mark (▼) in the table below for reference. The triangular mark (▼) is the reference for both plug and socket.
The manifold station numbers are set in order from left with b side solenoid (cap for single) facing forward.

[Precautions for connector (T53)]

(1) Signal arrays of the PLC output unit must match signal arrays on the valve side.
(2) The working power is 12/24 VDC dedicated.
(3) The T53 is driven with a general output unit.
(4) Never connect this manifold to the input unit, as major failures could occur in this device and in peripherals. Be sure to connect the manifold to the output unit.
(5) A voltage drop may occur due to simultaneous energizing or cable length. Confirm that the voltage drop for the solenoid is within 10% of the rated voltage.

Internal wiring of wiring method T53 (up to 24 solenoid stations)

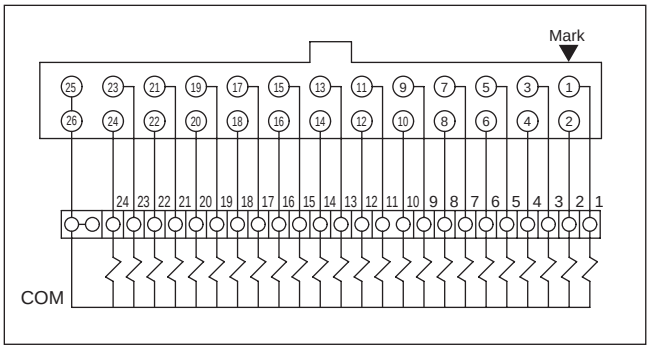

T53 (left side specifications)

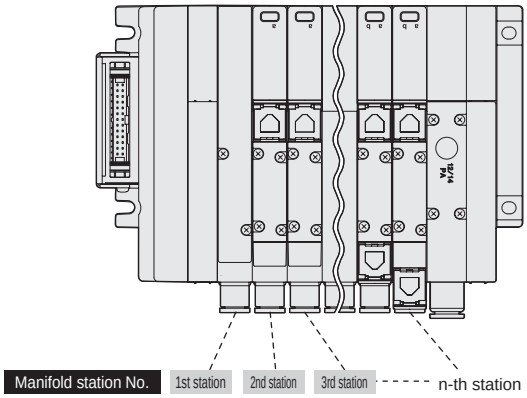

T53 connector pin array (example)

*: The numerals of valve numbers (1a, 1b, 2a, 2b ...) indicate the order of stations (first station, second station...) and the letters a and b indicate the a side solenoid and b side solenoid, respectively.
The manifold's max. station number differs depending on the model. Check the specifications of each model.

Connector pin No.

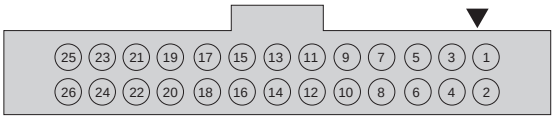

[Standard wiring]

● For single solenoid valve

Pin No.	25	23	21	19	17	15	13	11	9	7	5	3	1
Valve No.	COM	23a	21a	19a	17a	15a	13a	11a	9a	7a	5a	3a	1a
Pin No.	**26**	**24**	**22**	**20**	**18**	**16**	**14**	**12**	**10**	**8**	**6**	**4**	**2**
Valve No.	COM	24a	22a	20a	18a	16a	14a	12a	10a	8a	6a	4a	2a

● For double solenoid valve

Pin No.	25	23	21	19	17	15	13	11	9	7	5	3	1
Valve No.	COM	12a	11a	10a	9a	8a	7a	6a	5a	4a	3a	2a	1a
Pin No.	**26**	**24**	**22**	**20**	**18**	**16**	**14**	**12**	**10**	**8**	**6**	**4**	**2**
Valve No.	COM	12b	11b	10b	9b	8b	7b	6b	5b	4b	3b	2b	1b

● For mixed use (single/double mixture)

Pin No.	25	23	21	19	17	15	13	11	9	7	5	3	1
Valve No.	COM	16a	15a	14a	12a	10a	9a	8a	7a	5b	4b	3a	1a
Pin No.	**26**	**24**	**22**	**20**	**18**	**16**	**14**	**12**	**10**	**8**	**6**	**4**	**2**
Valve No.	COM	16b	15b	14b	13a	11a	9b	8b	7b	6a	5a	4a	2a

[Double wiring]

● For single solenoid valve

Pin No.	25	23	21	19	17	15	13	11	9	7	5	3	1
Valve No.	COM	12a	11a	10a	9a	8a	7a	6a	5a	4a	3a	2a	1a
Pin No.	**26**	**24**	**22**	**20**	**18**	**16**	**14**	**12**	**10**	**8**	**6**	**4**	**2**
Valve No.	COM	(Blank)	(Blank)	(Blank)	(Blank)	(Blank)	(Blank)	(Blank)	(Blank)	(Blank)	(Blank)	(Blank)	(Blank)

● For double solenoid valve

Pin No.	25	23	21	19	17	15	13	11	9	7	5	3	1
Valve No.	COM	12a	11a	10a	9a	8a	7a	6a	5a	4a	3a	2a	1a
Pin No.	**26**	**24**	**22**	**20**	**18**	**16**	**14**	**12**	**10**	**8**	**6**	**4**	**2**
Valve No.	COM	12b	11b	10b	9b	8b	7b	6b	5b	4b	3b	2b	1b

● For mixed use (single/double mixture)

Pin No.	25	23	21	19	17	15	13	11	9	7	5	3	1
Valve No.	COM	12a	11a	10a	9a	8a	7a	6a	5a	4a	3a	2a	1a
Pin No.	**26**	**24**	**22**	**20**	**18**	**16**	**14**	**12**	**10**	**8**	**6**	**4**	**2**
Valve No.	COM	(Blank)	(Blank)	(Blank)	9b	8b	7b	(Blank)	5b	4b	(Blank)	(Blank)	(Blank)

MEMO

Serial transmission:Wiring method

T7*/T8*Serial transmission

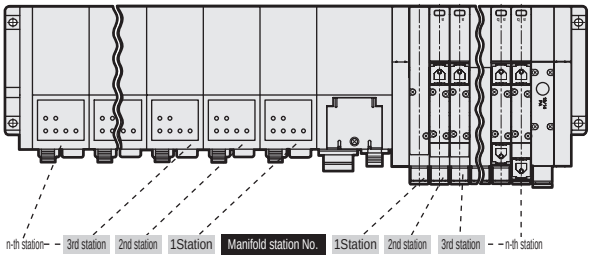

- Refer to the table below, as device unit I/O numbers differ according to PLC manufacturer.
- The device unit I/O numbers correspond to the manifold solenoids and I/O block as shown below.
- The solenoid manifold station numbers are set in order from left with the piping port facing forward regardless of the wiring block position.
- The I/O block station numbers are configured in order from the serial transmission device unit side. When input blocks and output blocks are mixed, the input blocks will be placed first on the device unit side upon configuration.
- When there are input configurations, it is possible to connect with sensors by using the input block.
- When the number of solenoid points is less than the output points, it is possible to connect with external equipment by using the output block.
- The working power is 24 VDC dedicated.
- A device unit for each communication system is used. Contact CKD for usable PLC models, host unit model numbers and communication system specifications. (Refer to page 1086)
- Securely tighten each connector (power/communication). Close and securely tighten the switch cover after completing the address settings, etc. (Proper tightening torque 0.3 N·m)

Correspondence of PLC address No. and serial transmission device unit I/O No.

(16) For hexadecimal notation

Serial transmission device unitI/ONo.		0	1	2	3	4	5	6	7	8	9	10	11	12	13	14	15	16	17	18	19	20	21	22	23	24	25	26	27	28	29	30	31
Output dedicated type	EtherCAT EtherNet/IP CC-Link IEF Basic PROFINET CC-Link DeviceNet	Y00	Y01	Y02	Y03	Y04	Y05	Y06	Y07	Y08	Y09	Y0A	Y0B	Y0C	Y0D	Y0E	Y0F	Y10	Y11	Y12	Y13	Y14	Y15	Y16	Y17	Y18	Y19	Y1A	Y1B	Y1C	Y1D	Y1E	Y1F
I/O mixed type	EtherCAT EtherNet/IP CC-Link IEF Basic PROFINET CC-Link DeviceNet	X00	X01	X02	X03	X04	X05	X06	X07	X08	X09	X0A	X0B	X0C	X0D	X0E	X0F	Y00	Y01	Y02	Y03	Y04	Y05	Y06	Y07	Y08	Y09	Y0A	Y0B	Y0C	Y0D	Y0E	Y0F

(10) For decimal notation

Serial transmission device unitI/ONo.		0	1	2	3	4	5	6	7	8	9	10	11	12	13	14	15	16	17	18	19	20	21	22	23	24	25	26	27	28	29	30	31
Output dedicated type	EtherCAT EtherNet/IP CC-Link IEF Basic PROFINET CC-Link DeviceNet	Y000	Y001	Y002	Y003	Y004	Y005	Y006	Y007	Y008	Y009	Y010	Y011	Y012	Y013	Y014	Y015	Y100	Y101	Y102	Y103	Y104	Y105	Y106	Y107	Y108	Y109	Y110	Y111	Y112	Y113	Y114	Y115
I/O mixed type	EtherCAT EtherNet/IP CC-Link IEF Basic PROFINET CC-Link DeviceNet	X000	X001	X002	X003	X004	X005	X006	X007	X008	X009	X010	X011	X012	X013	X014	X015	Y000	Y001	Y002	Y003	Y004	Y005	Y006	Y007	Y008	Y009	Y010	Y011	Y012	Y013	Y014	Y015

X**is input, Y**indicates output.

I/O numbers corresponding to I/O No. of wiring method T7*

Slave unit	Max. No. of inputs	Max. output points		Serial transmission device unit I/O No																													
	Input block No. of units	Output block No. of units	Valve SOL Number of points	0	1	2	3	4	5	6	7	8	9	10	11	12	13	14	15	16	17	18	19	20	21	22	23	24	25	26	27	28	29	30	31
• T7*1 • T7*P1	-	-	16 points	s1	s2	s3	s4	s5	s6	s7	s8	s9	s10	s11	s12	s13	s14	s15	s16																
• T7*2 • T7*P2	-	-	32 points	s1	s2	s3	s4	s5	s6	s7	s8	s9	s10	s11	s12	s13	s14	s15	s16	s17	s18	s19	s20	s21	s22	s23	s24	s25	s26	s27	s28	s29	s30	s31	s32
• T7*B7 • T7*PB7	1 block (4 points)	-	16 points	1-0	1-1	1-2	1-3													s1	s2	s3	s4	s5	s6	s7	s8	s9	s10	s11	s12	s13	s14	s15	s16
		1 units	12 points	1-0	1-1	1-2	1-3													s1	s2	s3	s4	s5	s6	s7	s8	s9	s10	s11	s12	2-0	2-1	2-2	2-3
		2 units	8 points	1-0	1-1	1-2	1-3													s1	s2	s3	s4	s5	s6	s7	s8	2-0	2-1	2-2	2-3	3-0	3-1	3-2	3-3
	2 block (8 points)	-	16 points	1-0	1-1	1-2	1-3	2-0	2-1	2-2	2-3									s1	s2	s3	s4	s5	s6	s7	s8	s9	s10	s11	s12	s13	s14	s15	s16
		1 units	12 points	1-0	1-1	1-2	1-3	2-0	2-1	2-2	2-3									s1	s2	s3	s4	s5	s6	s7	s8	s9	s10	s11	s12	3-0	3-1	3-2	3-3
		2 units	8 points	1-0	1-1	1-2	1-3	2-0	2-1	2-2	2-3									s1	s2	s3	s4	s5	s6	s7	s8	3-0	3-1	3-2	3-3	4-0	4-1	4-2	4-3
	3 block (12 points)	-	16 points	1-0	1-1	1-2	1-3	2-0	2-1	2-2	2-3	3-0	3-1	3-2	3-3					s1	s2	s3	s4	s5	s6	s7	s8	s9	s10	s11	s12	s13	s14	s15	s16
		1 units	12 points	1-0	1-1	1-2	1-3	2-0	2-1	2-2	2-3	3-0	3-1	3-2	3-3					s1	s2	s3	s4	s5	s6	s7	s8	s9	s10	s11	s12	4-0	4-1	4-2	4-3
		2 units	8 points	1-0	1-1	1-2	1-3	2-0	2-1	2-2	2-3	3-0	3-1	3-2	3-3					s1	s2	s3	s4	s5	s6	s7	s8	4-0	4-1	4-2	4-3	5-0	5-1	5-2	5-3
	4 block (16 points)	-	16 points	1-0	1-1	1-2	1-3	2-0	2-1	2-2	2-3	3-0	3-1	3-2	3-3	4-0	4-1	4-2	4-3	s1	s2	s3	s4	s5	s6	s7	s8	s9	s10	s11	s12	s13	s14	s15	s16
		1 units	12 points	1-0	1-1	1-2	1-3	2-0	2-1	2-2	2-3	3-0	3-1	3-2	3-3	4-0	4-1	4-2	4-3	s1	s2	s3	s4	s5	s6	s7	s8	s9	s10	s11	s12	5-0	5-1	5-2	5-3
		2 units	8 points	1-0	1-1	1-2	1-3	2-0	2-1	2-2	2-3	3-0	3-1	3-2	3-3	4-0	4-1	4-2	4-3	s1	s2	s3	s4	s5	s6	s7	s8	5-0	5-1	5-2	5-3	6-0	6-1	6-2	6-3

:Valve SOLOutput
:Output block
:Input block

I/ONo. of wiring method T8* I/O point number corresponding to

Slave unit	Max. No. of inputs: Input block No. of units	Max. output points: Number of output blocks	Max. output points: Solenoid Number of points	Serial transmission device unit I/O No 0	1	2	3	4	5	6	7	8	9	10	11	12	13	14	15	16	17	18	19	20	21	22	23	24	25	26	27	28	29	30	31
• T8G1(CC-Link) • T8D1(DeviceNet) (0 point input/16 point output)	-	-	16 points	s1	s2	s3	s4	s5	s6	s7	s8	s9	s10	s11	s12	s13	s14	s15	s16																
		1 block (4 points)	12 points	s1	s2	s3	s4	s5	s6	s7	s8	s9	s10	s11	s12	1-0	1-1	1-2	1-3																
		2 block (8 points)	8 points	s1	s2	s3	s4	s5	s6	s7	s8	1-0	1-1	1-2	1-3	2-0	2-1	2-2	2-3																
• T8G2(CC-Link) • T8D2(DeviceNet) (0 point input/32 point output)	-	-	32 points	s1	s2	s3	s4	s5	s6	s7	s8	s9	s10	s11	s12	s13	s14	s15	s16	s17	s18	s19	s20	s21	s22	s23	s24	s25	s26	s27	s28	s29	s30	s31	s32
		1 block (4 points)	28 points	s1	s2	s3	s4	s5	s6	s7	s8	s9	s10	s11	s12	s13	s14	s15	s16	s17	s18	s19	s20	s21	s22	s23	s24	s25	s26	s27	s28	1-0	1-1	1-2	1-3
		2 block (8 points)	24 points	s1	s2	s3	s4	s5	s6	s7	s8	s9	s10	s11	s12	s13	s14	s15	s16	s17	s18	s19	s20	s21	s22	s23	s24	1-0	1-1	1-2	1-3	2-0	2-1	2-2	2-3
		3 block (12 points)	20 points	s1	s2	s3	s4	s5	s6	s7	s8	s9	s10	s11	s12	s13	s14	s15	s16	s17	s18	s19	s20	1-0	1-1	1-2	1-3	2-0	2-1	2-2	2-3	3-0	3-1	3-2	3-3
		4 block (16 points)	16 points	s1	s2	s3	s4	s5	s6	s7	s8	s9	s10	s11	s12	s13	s14	s15	s16	1-0	1-1	1-2	1-3	2-0	2-1	2-2	2-3	3-0	3-1	3-2	3-3	4-0	4-1	4-2	4-3
• T8G7(CC-Link) • T8D7(DeviceNet) (16 point input/16 point output)	1 block (4 points)	-	16 points	1-0	1-1	1-2	1-3													s1	s2	s3	s4	s5	s6	s7	s8	s9	s10	s11	s12	s13	s14	s15	s16
		1 block (4 points)	12 points	1-0	1-1	1-2	1-3													s1	s2	s3	s4	s5	s6	s7	s8	s9	s10	s11	s12	2-0	2-1	2-2	2-3
		2 block (8 points)	8 points	1-0	1-1	1-2	1-3													s1	s2	s3	s4	s5	s6	s7	s8	2-0	2-1	2-2	2-3	3-0	3-1	3-2	3-3
	2 block (8 points)	-	16 points	1-0	1-1	1-2	1-3	2-0	2-1	2-2	2-3									s1	s2	s3	s4	s5	s6	s7	s8	s9	s10	s11	s12	s13	s14	s15	s16
		1 block (4 points)	12 points	1-0	1-1	1-2	1-3	2-0	2-1	2-2	2-3									s1	s2	s3	s4	s5	s6	s7	s8	s9	s10	s11	s12	3-0	3-1	3-2	3-3
		2 block (8 points)	8 points	1-0	1-1	1-2	1-3	2-0	2-1	2-2	2-3									s1	s2	s3	s4	s5	s6	s7	s8	3-0	3-1	3-2	3-3	4-0	4-1	4-2	4-3
	3 block (12 points)	-	16 points	1-0	1-1	1-2	1-3	2-0	2-1	2-2	2-3	3-0	3-1	3-2	3-3					s1	s2	s3	s4	s5	s6	s7	s8	s9	s10	s11	s12	s13	s14	s15	s16
		1 block (4 points)	12 points	1-0	1-1	1-2	1-3	2-0	2-1	2-2	2-3	3-0	3-1	3-2	3-3					s1	s2	s3	s4	s5	s6	s7	s8	s9	s10	s11	s12	4-0	4-1	4-2	4-3
		2 block (8 points)	8 points	1-0	1-1	1-2	1-3	2-0	2-1	2-2	2-3	3-0	3-1	3-2	3-3					s1	s2	s3	s4	s5	s6	s7	s8	4-0	4-1	4-2	4-3	5-0	5-1	5-2	5-3
	4 block (16 points)	-	16 points	1-0	1-1	1-2	1-3	2-0	2-1	2-2	2-3	3-0	3-1	3-2	3-3	4-0	4-1	4-2	4-3	s1	s2	s3	s4	s5	s6	s7	s8	s9	s10	s11	s12	s13	s14	s15	s16
		1 block (4 points)	12 points	1-0	1-1	1-2	1-3	2-0	2-1	2-2	2-3	3-0	3-1	3-2	3-3	4-0	4-1	4-2	4-3	s1	s2	s3	s4	s5	s6	s7	s8	s9	s10	s11	s12	5-0	5-1	5-2	5-3
		2 block (8 points)	8 points	1-0	1-1	1-2	1-3	2-0	2-1	2-2	2-3	3-0	3-1	3-2	3-3	4-0	4-1	4-2	4-3	s1	s2	s3	s4	s5	s6	s7	s8	5-0	5-1	5-2	5-3	6-0	6-1	6-2	6-3

:Input block

:Output block

:Solenoid output

* The numbers inside the outline of the I/O blocks indicate "the station order counting from the serial transmission device unit side - connector No."

Valve No. layout corresponding to wiring method T8*/T7 solenoid output No. (example)

*The numerals of valve numbers (1a, 1b, 2a, 2b ...) indicate the order of stations (first station, second station...) and the letters a and b indicate the a side solenoid and b side solenoid, respectively. The manifold's max. station number differs depending on the model. Check the specifications of each model.

[Standard wiring]

● For single solenoid valve (Max. 16 stations)

Solenoid output No.	s1	s2	s3	s4	s5	s6	s7	s8	s9	s10	s11	s12	s13	s14	s15	s16	s17	s18	s19	s20	s21	s22	s23	s24	s25	s26	s27	s28	s29	s30	s31	s32
Valve No.	1a	2a	3a	4a	5a	6a	7a	8a	9a	10a	11a	12a	13a	14a	15a	16a																

● For double solenoid valve

Solenoid output No.	s1	s2	s3	s4	s5	s6	s7	s8	s9	s10	s11	s12	s13	s14	s15	s16	s17	s18	s19	s20	s21	s22	s23	s24	s25	s26	s27	s28	s29	s30	s31	s32
Valve No.	1a	1b	2a	2b	3a	3b	4a	4b	5a	5b	6a	6b	7a	7b	8a	8b	9a	9b	10a	10b	11a	11b	12a	12b	13a	13b	14a	14b	15a	15b	16a	16b

● For mixed use (single/double mixture) (Max. 16 stations)

Solenoid output No.	s1	s2	s3	s4	s5	s6	s7	s8	s9	s10	s11	s12	s13	s14	s15	s16	s17	s18	s19	s20	s21	s22	s23	s24	s25	s26	s27	s28	s29	s30	s31	s32
Valve No.	1a	2a	3a	3b	4a	4b	5a	6a	7a	7b	8a	9a	10a	10b	11a	11b	12a	13a	14a	14b	15a	15b	16a									

[Double wiring]

● For single solenoid valve

Solenoid output No.	s1	s2	s3	s4	s5	s6	s7	s8	s9	s10	s11	s12	s13	s14	s15	s16	s17	s18	s19	s20	s21	s22	s23	s24	s25	s26	s27	s28	s29	s30	s31	s32
Valve No.	1a	(Blank)	2a	(Blank)	3a	(Blank)	4a	(Blank)	5a	(Blank)	6a	(Blank)	7a	(Blank)	8a	(Blank)	9a	(Blank)	10a	(Blank)	11a	(Blank)	12a	(Blank)	13a	(Blank)	14a	(Blank)	15a	(Blank)	16a	(Blank)

● For double solenoid valve

Solenoid output No.	s1	s2	s3	s4	s5	s6	s7	s8	s9	s10	s11	s12	s13	s14	s15	s16	s17	s18	s19	s20	s21	s22	s23	s24	s25	s26	s27	s28	s29	s30	s31	s32
Valve No.	1a	1b	2a	2b	3a	3b	4a	4b	5a	5b	6a	6b	7a	7b	8a	8b	9a	9b	10a	10b	11a	11b	12a	12b	13a	13b	14a	14b	15a	15b	16a	16b

● When mixed (single/double mixture)

Solenoid output No.	s1	s2	s3	s4	s5	s6	s7	s8	s9	s10	s11	s12	s13	s14	s15	s16	s17	s18	s19	s20	s21	s22	s23	s24	s25	s26	s27	s28	s29	s30	s31	s32
Valve No.	1a	(Blank)	2a	(Blank)	3a	3b	4a	4b	5a	(Blank)	6a	(Blank)	7a	7b	8a	(Blank)	9a	(Blank)	10a	(Blank)	11a	11b	12a	12b	13a	(Blank)	14a	(Blank)	15a	15b	16a	(Blank)

Model No.	LED display	Wiring method

T8G*



LED name	Display description
PW1	Lights when unit power is ON.
PW2	Lights when valve power is ON.
SD	Lights when transmitting data.
RD	Lights when receiving data.
L RUN	Lights when receiving normal data. Turns OFF at time over.
L ERR	Lights when transmission error occurs. Lights up at time over. Lights when station No. or transmission speed setting fails. Blinks when station No. or transmission speed setting changes.

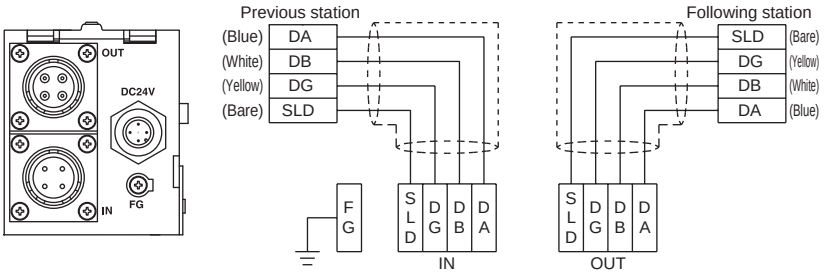

· The unit power supply and the valve power supply are separate power supplies.
Supply power from the power supply connector. (use M12 connector)
· Connect the CC-Link cable to the communication connector. (use CC-Link dedicated waterproof connector)
· Prepare a connector to be used on the wiring end.
· For the connector pin array, refer to page 1088. Note that the left and right sides will be reversed.

T8D*



LED name	Display description
MS	Displays device unit status.
NS	Displays network status.
VALVE	Lights when valve power is ON.

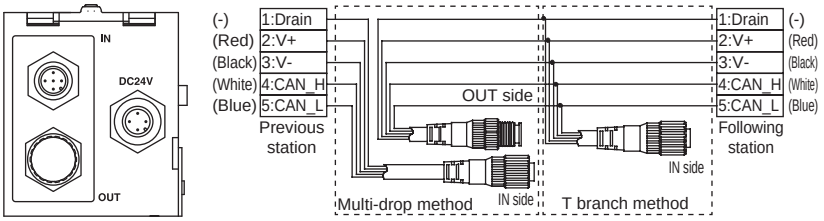

· The unit power supply and the valve power supply are separate power supplies.
Supply power from the power supply connector. (use M12 connector)
· Connect the DeviceNet cable to the communication connector. (use DeviceNet dedicated cable equipped connector)
· Prepare a connector to be used on the wiring end.
· For the connector pin array, refer to page 1089. Note that the left and right sides will be reversed.

Model No.	LED display	Wiring method

T7EC*

RUN ☐
ERR ☐
L/A IN ☐
L/A OUT ☐
INFO ☐
PW ☐
PW(V) ☐

LED name	Display description
RUN	Communication status of EtherCAT is indicated by the LED (green) state (OFF/ON/flashing) (green during normal communication)
ERR	Abnormal status of EtherCAT is indicated by the LED (red) state (OFF/ON/flashing) (OFF during normal communication)
L/A IN	Status of the Ethernet port (IN side) is indicated by the LED (green) state (OFF/ON/flashing)
L/A OUT	Status of the Ethernet port (OUT side) is indicated by the LED (green) state (OFF/ON/flashing)
INFO	Error status of the device unit is indicated by the LED (red) (OFF during normal communication)
PW	Lights when unit power is ON. Green lamp is ON when normal
PW(V)	Lights when valve power is ON. Green lamp is ON when normal (Cannot be monitored when the unit power is not turned ON)

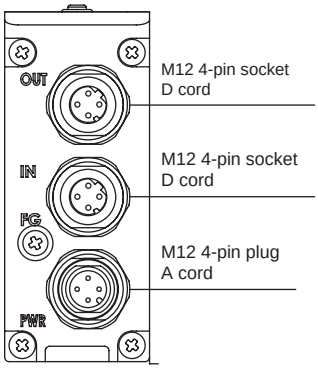

Communication connector pin array

M12 pins		Signal name	Function
OUT	1	TD+	Transmitted data, positive
	2	RD+	Received data, positive
	3	TD-	Transmitted data, negative
	4	RD-	Received data, negative
IN	1	TD+	Transmitted data, positive
	2	RD+	Received data, positive
	3	TD-	Transmitted data, negative
	4	RD-	Received data, negative

· The unit power supply (communication power supply) and the valve power supply are separate power supplies.
Supply power from the power supply connector (24 VDC). (use M12 connector)
· Connect the EtherCAT cable to the communication connector (IN).
(use M12 connector)
· Prepare a connector to be used on the wiring end.
· For the connector pin wiring, refer to page 1091.

T7EN*

MS ☐
NS ☐
L/A IN ☐
L/A OUT ☐
ST ☐
PW(V) ☐

LED name	Display description
MS	Status of device unit related to EtherNet/IP indicated by LED color (green/red) and ON status (ON/blinking)
NS	Status of network related to EtherNet/IP indicated by LED color (green/red) and ON status (ON/blinking)
L/A IN	Status of Ethernet port (IN side) indicated by LED color (green/yellow)
L/A OUT	Status of Ethernet port (OUT side) indicated by LED color (green/yellow)
ST	Status of device unit indicated by LED color (green/yellow) and ON status (ON/blinking)
PW(V)	Indicates valve power supply power status. Green lamp ON when power turned ON (Cannot be monitored when unit power supply is OFF)

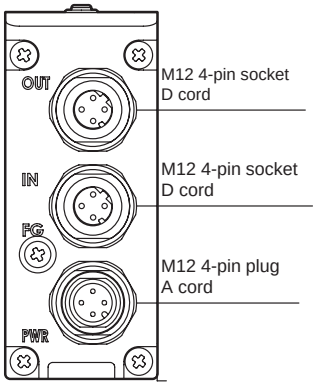

Communication connector pin array

Port	Pin	Signal name	Function
IN OUT	1	TD+	Transmitted data, positive
	2	RD+	Received data, positive
	3	TD-	Transmitted data, negative
	4	RD-	Received data, negative

T7EB*

LED display

RUN ☐
ERR ☐
L/A IN ☐
L/A OUT ☐
INFO ☐
PW ☐
PW(V) ☐

LED name	Display description
RUN	Status of CC-Link IEF Basic communication indicated by LED ON status (ON/blinking)
ERR	Status of CC-Link IEF Basic abnormal communication indicated by LED ON status (ON/blinking)
L/A IN	Status of Ethernet port (IN side) indicated by ON LED status (ON/blinking)
L/A OUT	Status of Ethernet port (OUT side) indicated by LED ON status (ON/blinking)
INFO	Status of device unit indicated by LED ON status (ON/blinking)
PW	Indicates unit power supply power status. Green lamp ON when powered ON
PW(V)	Indicates valve power supply power status. Green lamp ON when powered ON (Cannot be monitored when unit power is not turned ON)

Wiring method

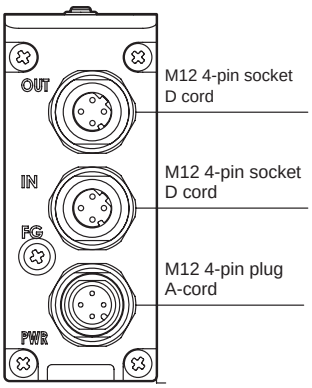

Communication connector pin array

Port	Pin	Signal name	Function
IN OUT	1	TD+	Transmitted data, positive
	2	RD+	Received data, positive
	3	TD-	Transmitted data, negative
	4	RD-	Received data, negative

T7EP*

LED display

RUN ☐
ERR ☐
L/A IN ☐
L/A OUT ☐
INFO ☐
PW ☐
PW(V) ☐

LED name	Display description
RUN	Communication status of PROFINET indicated by LED ON status (ON/blinking)
ERR	Abnormal communication status of PROFINET indicated by LED ON status (ON/blinking)
L/A IN	Status of Ethernet port (IN side) indicated by ON LED status (ON/blinking)
L/A OUT	Status of Ethernet port (OUT side) indicated by LED ON status (ON/blinking)
INFO	Status of device unit indicated by LED ON status (ON/blinking)
PW	Indicates unit power supply power status. Green lamp ON when powered ON
PW(V)	Indicates valve power supply power status. Green lamp ON when powered ON (Cannot be monitored when unit power is not turned ON)

Wiring method

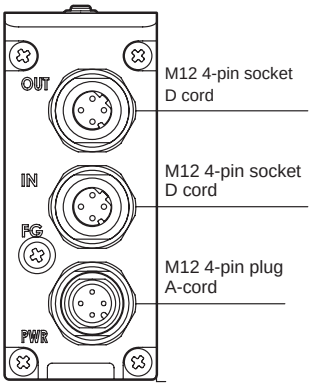

Communication connector pin array

Port	Pin	Signal name	Function
IN OUT	1	TD+	Transmitted data, positive
	2	RD+	Received data, positive
	3	TD-	Transmitted data, negative
	4	RD-	Received data, negative

MEMO

PLC compatibility table

Model No.	Manufacturer name (recommended organization)	Communication system name	Host unit model No.
T7EC*	EtherCAT Technology Group	EtherCAT	Connected to EtherCAT-compatible master
	OMRON Corporation		NJ101 NJ301 NJ501 CJ1W-NC□82
T7EN*	ODVA	EtherNet/IP	Connected to EtherNet/IP-compatible master
	OMRON Corporation		NJ101 NJ301 NJ501 CJ1W-EIP21 CS1W-EIP21
T7EB*	CC-Link Partner Association (CLPA)	CC-Link IEF Basic	Connected to CC-Link IEF Basic-compatible master
	Mitsubishi Electric Corporation		MELSEC-Q Series Q03UDVCPU
T7EP*	PROFIBUS & PROFINET International	PROFINET	Connected to PROFINET-compatible master
	SIEMENS Corporation		S7-1200 S7-1500
T8D*	ODVA	DeviceNet	Connected to DeviceNet-compatible master
	OMRON Corporation		CJ1W-DRM21 CS1W-DRM21-V1 C200HW-DRM21-V1 CVM1-DRM21-V1
T8G*	CC-Link Partner Association (CLPA)	CC-Link	Each manufacturer's CC-Link compatible master
	Mitsubishi Electric Corporation		QJ61BT11N A1SJ61QBT11 A1SJ61BT11

Note: For details on master units and models not listed above, contact each PLC manufacturer.

Model No. / I/O type		LED display	Wiring method
Input block NW4G□2-IN-$^{N}_{P}$-$^{K}_{B}$	Sink	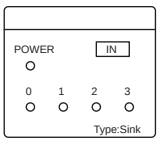	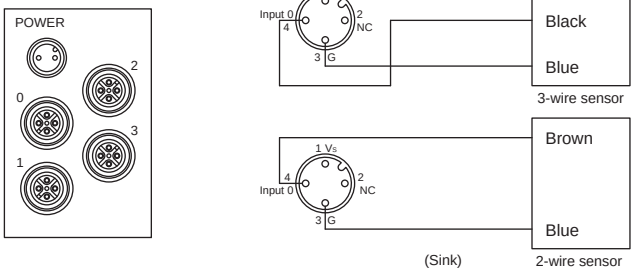
		LED name / **Display description** **POWER**: Lights when power supply for sensor is supplied **0 to 3**: Lights when each sensor output is ON	· There are two types of power supplies for the sensors. One has specifications common with the unit power supply and the other has specifications where an external power supply is supplied form the POWER connector. · The input include sink and source type. · Prepare a connector to be used on the cable end.
	Source type	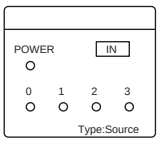	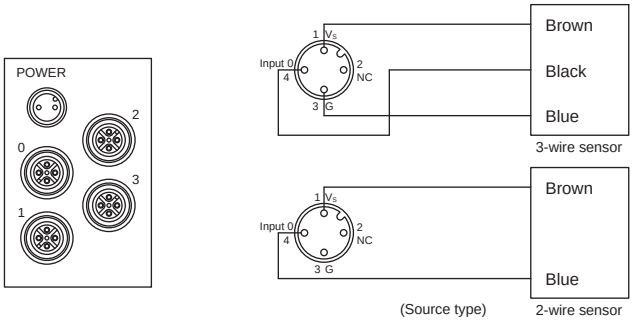
		LED name / **Display description** **POWER**: Lights when power supply for sensor is supplied **0 to 3**: Lights when each sensor output is ON	· There are two types of power supplies for the sensors. One has specifications common with the unit power supply and the other has specifications where an external power supply is supplied form the POWER connector. · The input include sink and source type. · Prepare a connector to be used on the cable end.
Output block NW4G□2-OUT-$^{N}_{P}$-B	Sink	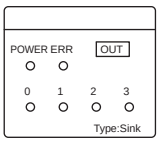	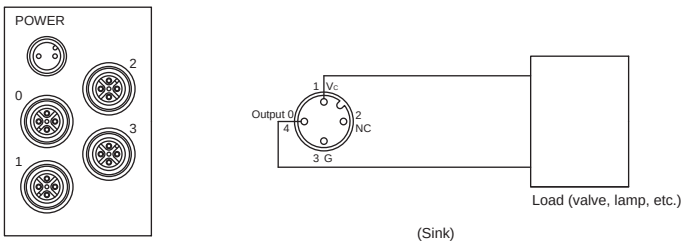
		LED name / **Display description** **POWER**: Lights when power supply for external load is supplied **ERR**: Lights when protection circuit is operating **0 to 3**: Lights when each external load is ON	· Feed the power supply for external loads from the POWER connector. (Dedicated for 24 VDC) · Take care that the total of the external load current is 3 A or less (1 A/1 point or less). · The output include sink and source type. · Prepare a connector to be used on the cable end.
	Source type	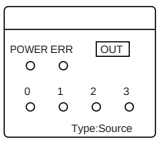	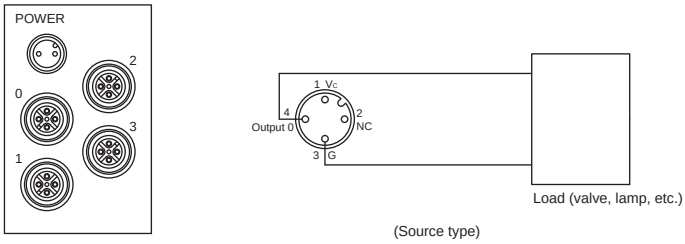
		LED name / **Display description** **POWER**: Lights when power supply for external load is supplied **ERR**: Lights when protection circuit is operating **0 to 3**: Lights when each external load is ON	· Feed the power supply for external loads from the POWER connector. (Dedicated for 24 VDC) · Take care that the total of the external load current is 3 A or less (1 A/1 point or less). · The output include sink and source type. · Prepare a connector to be used on the cable end.

Waterproof connector

For CC-Link

● Power supply connector (female pin)

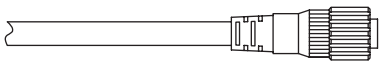

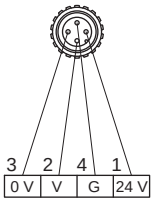

Pin No.	Signal name	Remarks
1	24 V	Unit power supply + side
2	V	Valve power supply + side
3	0 V	Unit power supply - side
4	G	Valve power supply - side

Recommended connector

Connector with cable

· XS2F-D421-* (single end connector socket)

Assembly connector

· XS2C-D4C* (crimping)
· XS2C-D42* (soldering)
· XS2C-D4S* (screw connecting)

OMRON Corporation

* Do not use the L type connector.

● Communication connector

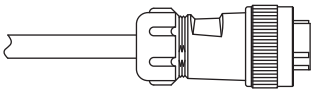

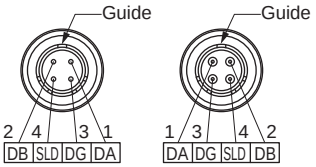

Pin No.	Signal name	Conductor color
1	DA	Blue
2	DB	White
3	DG	Yellow
4	SLD	Shielded stranded wire

Recommended connector: For IN FA-204-PF8 (female pin)
For OUT FA-204-PM8 (male pin)

Mitsubishi Electric Engineering Co., Ltd.

* The above model No. supports cables where the outer diameter of the cable being used is ø7.0 to ø8.5.
Contact Mitsubishi Electric Engineering Co., Ltd. when the outer diameter of the cable is different.
* Contact Mitsubishi Electric Engineering Co., Ltd. for the cable equipped waterproof connector.

● Communication cable

Recommended cable (representative example)

CC-Link dedicated cable	FANC-SB
Ver. 1.10 compatible dedicated cable	FANC-110SBH

Kuramo Electric Co., Ltd.

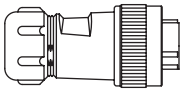

This device unit is compatible with CC-Link Ver. 1.10

Name End connector
Model Name FA-CONW4P110E
Manufacturer Mitsubishi Electric Engineering Co., Ltd.

* End processing will be necessary when the device unit is being connected to the fartherest position from the master unit. Connect the above end connector to the OUT side. When being used with the specially designed high-performance cable or a T-branched connection, exchange the resistor within the end connector.

	Dedicated cable and ver. 1.10 compatible dedicated cable	Specially designed high-performance cable	T-branched connection	
			Main line wiring	Sub line wiring
Terminating resistor	110 Ω (equipped)	130 Ω	110 Ω x 2 units	No terminating resistor

Connection method

● For intermediary station

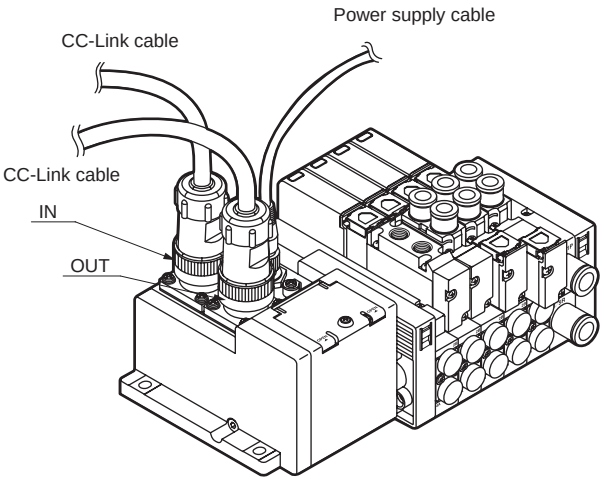

● For terminating station

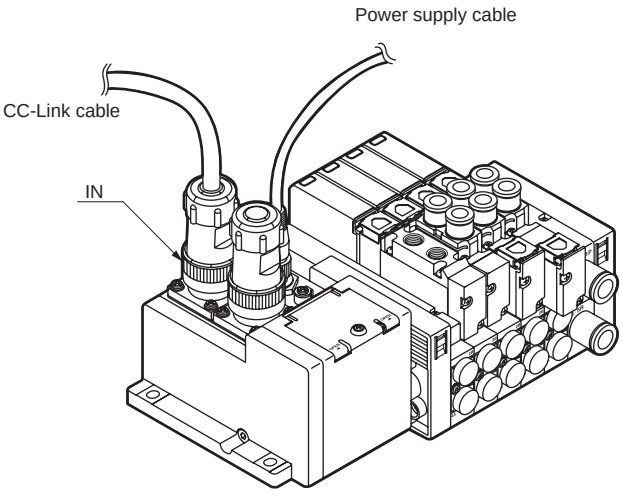

Waterproof connector

For DeviceNet

● Connector with cable for DeviceNet (female pin: for IN)

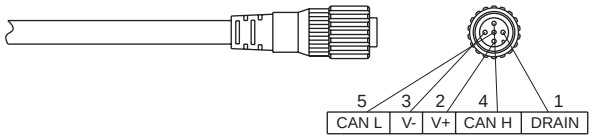

● Connector with cable for DeviceNet (male pin: for OUT)

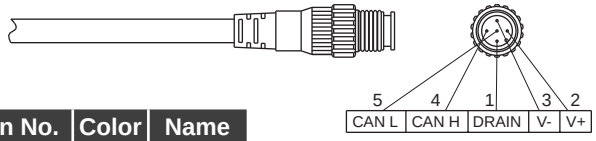

Pin No.	Color	Name
1	−	DRAIN
2	Red	V+
3	Black	V-
4	White	CAN H
5	Blue	CAN L

Recommended connectors with cable

• DCA1-5CN**W1 (both-end connector with cable socket/plug)

For IN

• DCA1-5CN**F1 (single-end connector with cable socket)

For OUT

• DCA1-5CN**H1 (single-end connector with cable plug)

OMRON Corporation

* Do not use the L type connector.

● Connector for power supply (female pin)

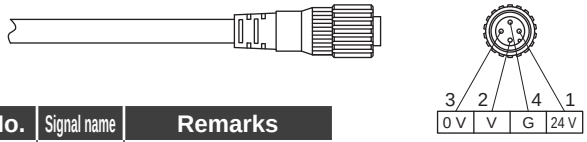

Pin No.	Signal name	Remarks
1	24 V	Unit power supply + side
2	V	Valve power supply + side
3	0 V	Unit power supply - side
4	G	Valve power supply - side

Recommended connectors

Connector with cable

• XS2W-D421-* (both end connector socket/plug)
• XS2F-D421-* (single end connector socket)

Assembly connector

• XS2C-D4C* (crimping)
• XS2C-D42* (soldering)
• XS2C-D4S* (screw connecting)

OMRON Corporation

Connection method

● When using a T-branched connection

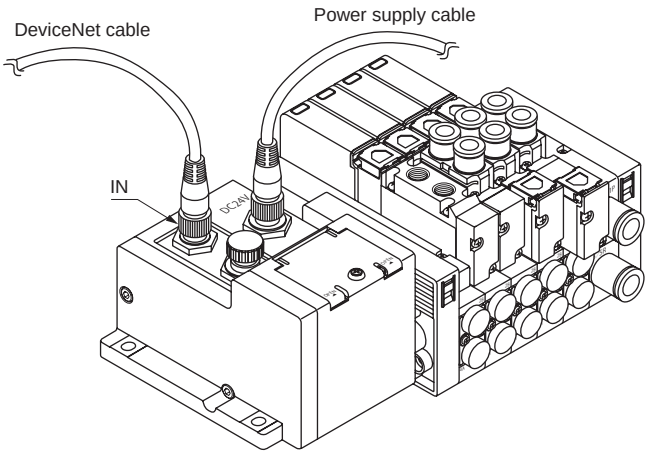

● When using a multi-drop connection

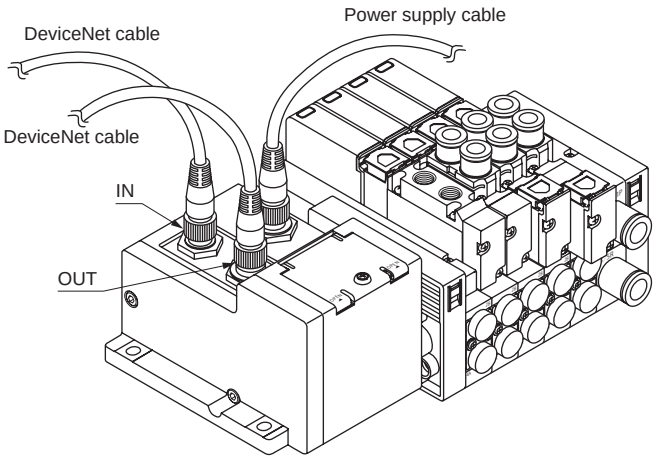

* When conducting multi-drop wiring with the DeviceNet communication cable, make sure that the current of the communication power supply passing through this device unit is rated at 2 A or less.

Waterproof connector

For EtherCAT

● For EtherCAT connector

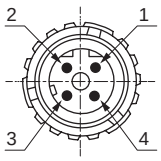

(Plug)

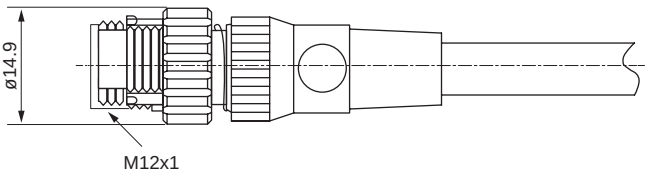

M12x1

Pin No.	Signal name	Function
1	TD+	Transmitted data, positive
2	RD+	Received data, positive
3	TD-	Transmitted data, negative
4	RD-	Received data, negative

For wiring method, refer to the following communication connector pin layout and communication cable wiring example.
Use CAT5 or higher for communication cable lines.

Recommended M12-RJ45 communication cable with connector
- · Type XS5W-T421-□MC-K Straight OMRON
- · No. 0945 700 50□□ Straight HARTING

Recommended communication plug and cable
- · No. 0945 600 01□□ Cable single unit HARTING
- · No. 2103 281 1405 Assembly M12 connector HARTING
- · No. 0945 151 1100 Assembly RJ-45 connector HARTING

● Connector for power supply

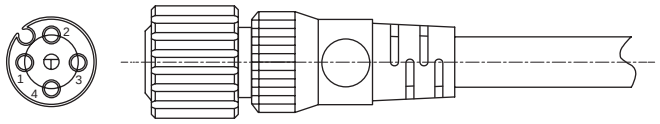

Pin No.	Description
1	Unit power supply + side (24 VDC)
2	Valve power supply + side
3	Unit power supply - side (0 V)
4	Valve power supply - side

Recommended M12-loose wire power cable
- ·Type XS2F-D421-□ 8 □-□ Straight OMRON

Recommended communication plug and power cable
- · No. 2103 212 2305 Assembly M12 connector HARTING
- ·Electric wire size: AWG22-18, Applicable cable diameter: ø6 to 8

* □ differs depending on the cable specifications.

Connection method

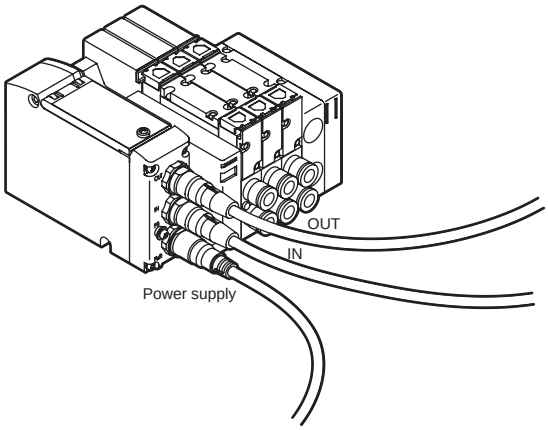

Waterproof connector

For I/O

❶ For input block

● External power supply connector (male pin)

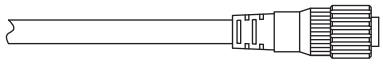

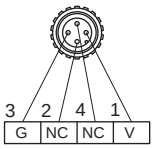

Pin No.	Signal name	Remarks
1	V	External power supply + side
2	NC	Not connected
3	G	External power supply - side
4	NC	Not connected

Recommended connector
Connector with cable
· XS2F-D421-* (single end connector socket)

Assembly connector
· XS2C-D4C* (crimping)
· XS2C-D42* (soldering)
· XS2C-D4S* (screw connecting)

OMRON Corporation

* Do not use the L type connector.

● Sensor side connector (male pin)

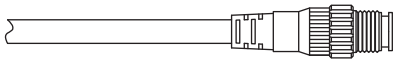

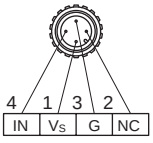

2-wire sensor

Pin No.	Signal name	Sink	Source type
1	V_S	Not connected	Sensor power supply + side
2	NC	Not connected	Not connected
3	G	Sensor power supply - side	Not connected
4	IN	Input signal	Input signal

3-wire sensor

Pin No.	Signal name	Sink/source type
1	V_S	Sensor power supply + side
2	NC	Not connected
3	G	Sensor power supply - side
4	IN	Input signal

Recommended connector
Connector with cable
· XS2H-D421-* (single end connector plug)

Assembly connector
· XS2G-D4C* (crimping)
· XS2G-D42* (soldering)
· XS2G-D4S* (screw connecting)

OMRON Corporation

* Do not use the L type connector.

❷ For output block

● External power supply connector (male pin)

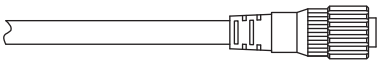

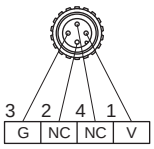

Pin No.	Signal name	Remarks
1	V	External power supply + side
2	NC	Not connected
3	G	External power supply - side
4	NC	Not connected

Recommended connector
Connector with cable
· XS2F-D421-* (single end connector socket)

Assembly connector
· XS2C-D4C* (crimping)
· XS2C-D42* (soldering)
· XS2C-D4S* (screw connecting)

OMRON Corporation

* Do not use the L type connector.

● External load side connector (male pin)

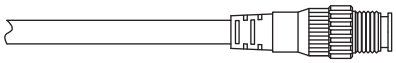

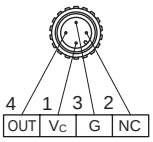

Pin No.	Signal name	Sink	Source type
1	V_C	Power supply for load + side	Not connected
2	NC	Not connected	Not connected
3	G	Not connected	Power supply for load - side
4	OUT	Output signal	Output signal

Recommended connector
Connector with cable
· XS2H-D421-* (single end connector plug)

Assembly connector
· XS2G-D4C* (crimping)
· XS2G-D42* (soldering)
· XS2G-D4S* (screw connecting)

OMRON Corporation

* Do not use the L type connector.

Wiring structure between wiring block and valve block (DC specifications)

A part called a dedicated wiring connector is built into the valve block and supply and exhaust block, etc. This structure enables the wiring to be completed simultaneously with the disassembly and assembly of the block manifold. Special wiring work is not required during disassembly and assembly. There is regularity to the wiring block connector pin numbers and wired valves. Refer to the section on the wiring method of each wiring block, and connect the wires between the valves and control device. Take special care when increasing or decreasing the number of valve blocks. In addition, an example of the wiring circuit when expanding stations is shown below.

Example of wiring circuit

The diagram below shows the wiring circuit for MW4G2 and differs from the actual specifications.

Double wiring

When one station of a valve block has been expanded between the 2nd and 3rd station, the output that had been assigned to terminal block No. 5 and No. 6 of the wiring block will automatically shift for two solenoids and be assigned to terminal block No. 7 and No. 8.

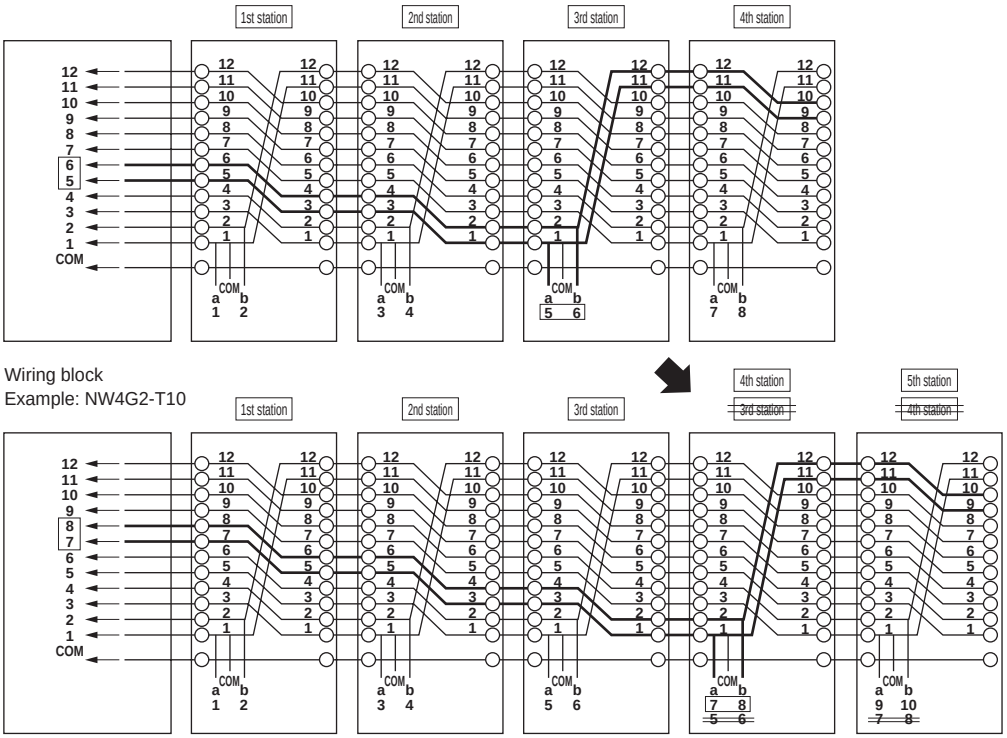

Standard wiring

Similar to double wiring, the terminal block numbers will shift assignments. However, how they shift will depend on the solenoid valve. With types having one solenoid valve (2-position single), they shift for one valve position. With types having two solenoid valves (2-position double / 3-position), they shift for two valve positions.

Exploded view of block manifold

* For an exploded view of the serial transmission device unit + I/O block, refer to the following page.

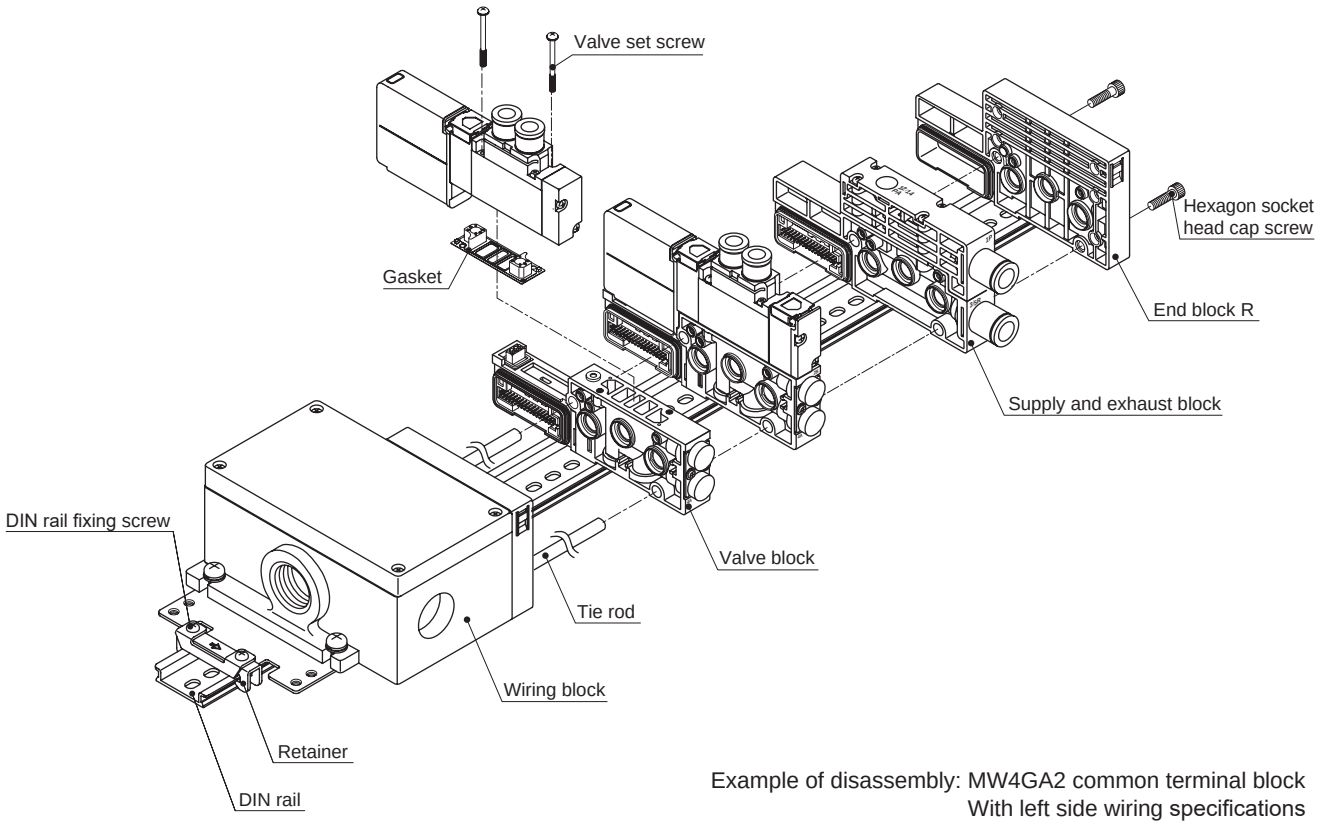

Example of disassembly: MW4GA2 common terminal block
With left side wiring specifications

Removing the wiring cover

T10

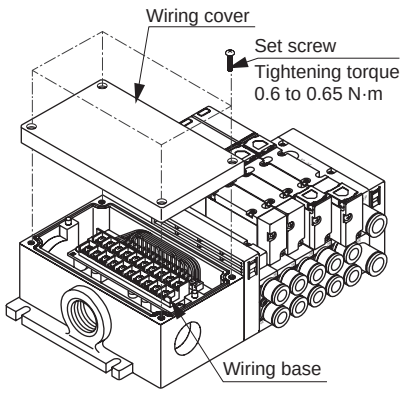

Increasing the valve blocks

(● when mounted on a DIN rail)

❶Loosen the retainer's DIN rail set screws.
(2) Remove the hexagon socket head cap screw.
(3) Remove the blocks up to the unit increase location.
(4) Install a tie rod for the units being increased.
(5) Mount the valve block to be added.
(6) Press so that there is no gap between blocks, and fasten with the hexagon socket head cap screw. (Tightening torque: 1.1 to 1.3 N·m)
❼-A. Catch retainer jaws onto DIN rail,
-B. press retainer in direction of arrow, and
-C. fasten DIN rail set screw.
(Tightening torque: 1.2 to 1.6 N·m)

Replacing valves

Removing method

(1) Loosen the mounting screws (2 positions).
(2) Remove the valve from the valve block.

Installation method

Follow the removal procedure in reverse.
Refer to the table below for the recommended tightening torque for the mounting screws.

Recommended tightening torque for the valve set screw

	Size	Recommended tightening torque (N·m)
4G2	M2.5	0.25 to 0.30

Exploded view of serial transmission device unit + I/O block

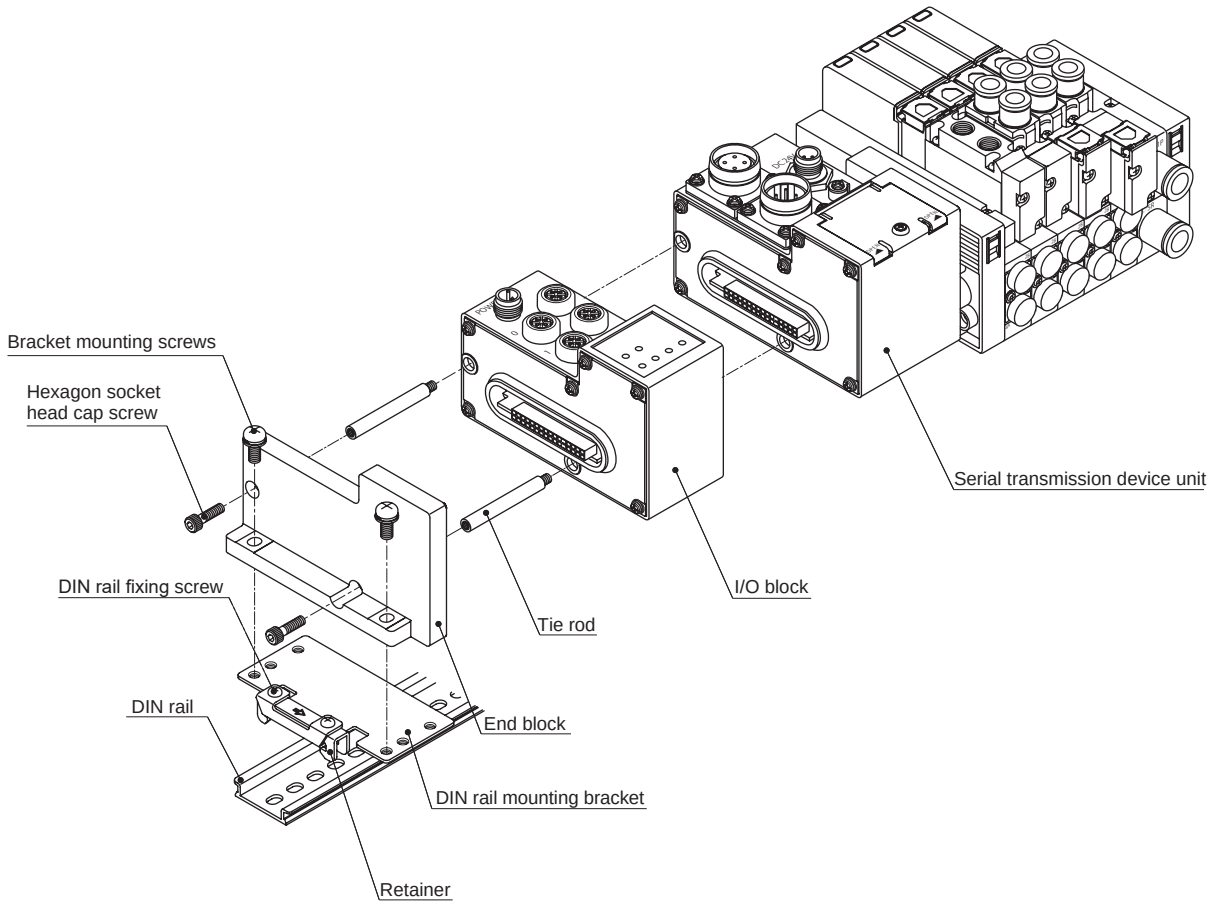

Expansion of I/O block

(● when mounted on a DIN rail)

❶Loosen the retainer's DIN rail set screws.

❷Remove the bracket mounting screws and remove the DIN rail mounting bracket.

(3) Remove the hexagon socket head cap screw.

(4) Remove the I/O blocks up to the unit increase location.

(5) Install a tie rod for the units being increased.

(6) Mount the I/O block to be added.

(Configurations for the rotary switch are necessary with an I/O block. Refer to the handling precautions included with the product for details.)

(7) Press so that there is no gap between blocks, and fasten with the hexagon socket head cap screw. (Tightening torque: 1.1 to 1.3 N·m)

❽Attach the DIN rail mounting bracket with the bracket mounting screws.
(Tightening torque: 1.8 to 2.3 N·m)

❾-A. Catch retainer jaws onto DIN rail,
-B. press retainer in direction of arrow, and
-C. fasten DIN rail set screw.
(Tightening torque: 1.2 to 1.6 N·m)

Instructions for connecting T10 wiring base (standard wiring)

The correspondence rules for connector and valve on the wiring base vary depending on the reduced wiring specifications (T10). For connector wiring, check the connector No. printed on the base.
For wiring of mix (consolidation), the manifold configuration as shown in the figure below is indicated as an example.

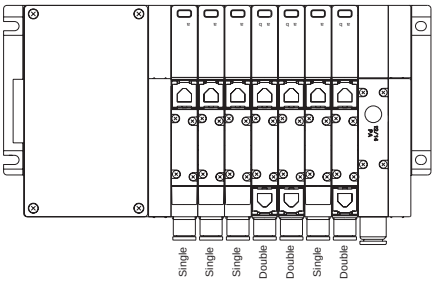

T10

Wiring base assembly

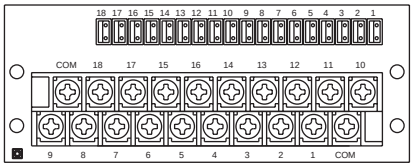

Wire in the order shown by the arrow

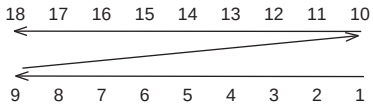

Correspondence to valve

1) For single SOL
(MF station No. max. 18 stations)

Connector No.	COM	18	17	16	15	14	13	12	11	10
Valve No.	COM	18a	17a	16a	15a	14a	13a	12a	11a	10a
Connector No.	**9**	**8**	**7**	**6**	**5**	**4**	**3**	**2**	**1**	**COM**
Valve No.	9a	8a	7a	6a	5a	4a	3a	2a	1a	COM

2) For double SOL
(MF station No. max. 9 stations)

Connector No.	COM	18	17	16	15	14	13	12	11	10
Valve No.	COM	9b	9a	8b	8a	7b	7a	6b	6a	5b
Connector No.	**9**	**8**	**7**	**6**	**5**	**4**	**3**	**2**	**1**	**COM**
Valve No.	5a	4b	4a	3b	3a	2b	2a	1b	1a	COM

3) For mix (consolidation)
(Number of solenoid valves up to 18 points)

Connector No.	COM	18	17	16	15	14	13	12	11	10
Valve No.	COM	(Blank)	(Blank)	(Blank)	(Blank)	(Blank)	(Blank)	(Blank)	(Blank)	7b
Connector No.	**9**	**8**	**7**	**6**	**5**	**4**	**3**	**2**	**1**	**COM**
Valve No.	7a	6a	5b	5a	4b	4a	3a	2a	1a	COM

*1 Expansion wiring will be necessary only with AC specifications.

*2 With AC, when a change of specifications is expected, use the masking plate equipped valve block as a spare block.

Instructions for connecting T10 wiring base (double wiring)

The double wiring specifications correspond to the wiring of the double solenoid, regardless of the switching position classification of the solenoid valve to be mounted. The standard wiring and the double SOL only of double wiring have the same wiring.

T10

Wiring base assembly

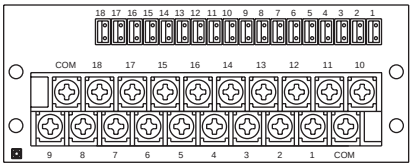

Wire in the order shown by the arrow

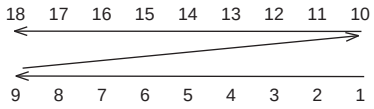

Correspondence to valve

1) For single SOL
(MF station No. max. 9 stations)

Connector No.	COM	18	17	16	15	14	13	12	11	10
Valve No.	COM	(Blank)	9a	(Blank)	8a	(Blank)	7a	(Blank)	6a	(Blank)
Connector No.	**9**	**8**	**7**	**6**	**5**	**4**	**3**	**2**	**1**	**COM**
Valve No.	5a	(Blank)	4a	(Blank)	3a	(Blank)	2a	(Blank)	1a	COM

2) For double SOL
(MF station No. max. 9 stations)

Connector No.	COM	18	17	16	15	14	13	12	11	10
Valve No.	COM	9b	9a	8b	8a	7b	7a	6b	6a	5b
Connector No.	**9**	**8**	**7**	**6**	**5**	**4**	**3**	**2**	**1**	**COM**
Valve No.	5a	4b	4a	3b	3a	2b	2a	1b	1a	COM

3) For mix (consolidation)
(Number of solenoid valves up to 18 points)

Connector No.	COM	18	17	16	15	14	13	12	11	10
Valve No.	COM	(Blank)	(Blank)	(Blank)	(Blank)	7b	7a	(Blank)	6a	5b
Connector No.	**9**	**8**	**7**	**6**	**5**	**4**	**3**	**2**	**1**	**COM**
Valve No.	5a	4b	4a	(Blank)	3a	(Blank)	2a	(Blank)	1a	COM

MW4G2 Series

How to fill out manifold specifications sheet

● Manifold model No. (example)

Solenoid position 2 types or more
Port size 2 types or more
Serial transmission (CC-Link) (16 point input / 16 point output)

MW 4 GA2 8 0- CX - T8G7 W HY11 D - 6 - 3

Ⓐ Model No. Ⓑ Solenoid position Ⓒ Port size Ⓔ Reduced wiring connection Ⓕ Terminal/connector pin array Ⓖ Option Ⓗ Mount Ⓘ Station No. Ⓙ Voltage

The method is different from that for the manifold station No.

Part name	Model No.	Layout position 1	2	3	4	5	6	7	8	9	10	11	12	13	14	15	16	17	18	19	20	21	22	23	24	25	26	27	28	29	30	Quantity
I/O block (Page 1056)	NW4GA2-IN-[N]-[K]		○																													1
	NW4GA2-OUT-[N]-B	○																														1
Wiring block (Page 1055)	NW4GA2-T[8G7]			○																												1
Valve block with solenoid valve (Pages 992 to 995)	NW4GA2[1]0-[C4]				○																											1
	NW4GA2[2]0-[C6]						○																									1
	NW4GA2[3]0-[C4]					○																										1
	NW4GA2[ ]0-[ ]																															
	NW4GA2[ ]0-[ ]																															
	NW4GA2[ ]0-[ ]																															
	NW3GA2[1]0-[C4]										○																					1
	NW3GA2[11]0-[C4]											○																				1
Valve block with masking plate (Page 1050)	NW4G2-MPS																															
	NW4G2-MPD												○																			1
Supply and exhaust block (Page 1052)	NW4G2-Q[ ]-[8L]-[ ]							○		○																						2
	NW4G2-Q[ ]-[ ]-[ ]																															
	NW4G2-Q[ ]-[ ]-[ ]																															
	NW4G2-Q[ ]-[ ]-[ ]																															
Partition block (Page 1052)	NW4G2-[SA]								○																							1
	NW4G2-[ ]																															
	NW4G2-[ ]																															
End block R (Page 1052)	NW4G2-[E]R												○																			1

Be sure to fill in at far right.
Mark a circle if necessary.
Mark a circle if necessary when the reduced wiring connection is T10. (Select with applicable cable O.D.)
Manifold station No.: 1st station
Manifold station No.: 6th station
When the input/output blocks are both being installed, the output block will be on the left side. (with the fitting facing forward)

DIN rail	L_7 = [ ] (How to calculate length page 1096)	Blanking plug			Silencer			Tag plate	Cable clamp W4G-SCL-18A	Cable clamp W4G-SCL-18B	Waterproof plug	Accessory
		GWP4-B	GWP6-B		SLW-H8			A ○	Applicable cable O.D. ø14.5 to 16.5	Applicable cable O.D. ø16.5 to 18.5	W4G-XSZ-12	
		GWP8-B	GWP10-B		SLW-H10							
		Cable with D sub-connector (refer to page 1064)			Cable with multi-connector					Multi-connector only		
		N4T-CABLE-DO[ ]-[ ]			W4G-RMC-[ ]					W4G2-RM21WTP-[ ]		

When a blanking plug or silencer is necessary, list the quantity in the field for the required size.
List the quantity for I/O block requirements.

Preparing manifold specifications sheet

- Complete from the left end, with the piping port facing forward, regardless of the wiring block method.
  (Write the block model numbers and positions you determined referring to the block configurations (pages 1048 to 1063).)
- Write the total number of blocks specified in the required quantity field at the table far right.
- Mark a circle for accessories that are required.
- Indicate the mounting rail length. (Fill in only when a length other than the standard length is required.)
- As there are manifold specifications sheet for each of the various series, fill in the form for the corresponding specifications sheet.

MW4GA/B/Z2 (individual wiring body piping, base side piping, base bottom piping) ····· Page 1098
MW4GA2 (reduced wiring body piping) ····· Page 1099
MW4GB2 (reduced wiring base side piping) ····· Page 1100
MW4GZ2 (reduced wiring base bottom piping) ····· Page 1101

* DIN rail length (L_7)

(1) Determine the rail length using the calculation method shown below.
The obtained length is standard.
(2) For standard length, length (L_7) is not required on the specification sheet.
Indicate the length when using a non-standard length.

● How to calculate length of DIN rail

Manifold length (L_6) = (16 x Valve block Quantity) + (18 x Supply and exhaust block Quantity) + (13.5 x Partition block Quantity) + (Wiring block (including end block)) + (45 x I/O block Quantity)

Select from the table at right.

DIN rail length (L_7) = L_7' x 12.5

$$L_7' : \frac{L_6+40}{12.5} \rightarrow \text{round up to integer}$$

Rail mounting pitch (L_8) = L_7 -12.5

Wiring block dimensions table

Model No.		Dimensions (mm)
Wiring block for reduced wiring	T10	175.5
	T20	110
	T30/5*	106
	T8*	148.5

* The end block is included in the wiring block.

● DIN rail length quick reference table

L_6: Manifold length	135 or less	Over 135 to 147.5	147.5 to 160	160 to 172.5	172.5 to 185	185 to 197.5	197.5 to 210	210 to 222.5	222.5 to 235	235 to 247.5	247.5 to 260	260 to 272.5	272.5 to 285	285 to 297.5	297.5 to 310	310 to 322.5	322.5 to 335	335 to 347.5	347.5 to 360	360 to 372.5	372.5 to 385	385 to 397.5	397.5 to 410	410 to 422.5	422.5 to 435	435 to 447.5	447.5 to 460	460 to 472.5	472.5 to 485
L_7: Rail length	175	187.5	200	212.5	225	237.5	250	262.5	275	287.5	300	312.5	325	337.5	350	362.5	375	387.5	400	412.5	425	437.5	450	462.5	475	487.5	500	512.5	525
Pitch L_8	162.5	175	187.5	200	212.5	225	237.5	250	262.5	275	287.5	300	312.5	325	337.5	350	362.5	375	387.5	400	412.5	425	437.5	450	462.5	475	487.5	500	512.5

*1: When L_6 exceeds this table range, calculate according to “How to calculate DIN rail length”.

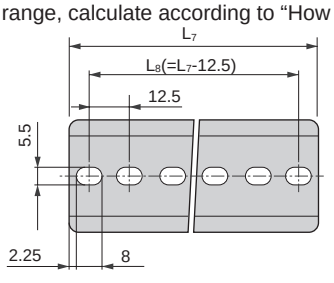

How to fill out the wiring specifications sheet (AC specifications only)

This is not required with standard wiring/double wiring.
(With DC specifications, only standard wiring and double wiring will be supported)

● Wiring specifications sheet (example)

* The following example has been filled out in accordance with the manifold specifications sheet on page 1096.

Connector pin No.	Valve No.																							
T10	1	2	3	4	5	6	7	8	9	10	11	12	13	14	15	16	17	18	19	20	21	22	23	24
1	a																							
2																								
3			a																					
4			b																					
5		a																						
6		b																						
7				a																				
8																								
9					a																			
10																								
11						a																		
12						b																		
13																								
14																								
15																								
16																								
17																								
18																								
COM																								
COM																								

● Notes on wiring specifications sheet

(1) Fill in and attach to the manifold specifications sheet for anything other than the standard wiring or double wiring.
Consult with CKD, as products will be made to order in this case.

(2) The valve No. is determined by only counting the valve blocks in order from the left with the ports facing forward.
Note that this differs from the installation position numbers.

(3) The valve block with masking plate is wired in advance.
"-MPS" will be wired on only the a side while "-MPD" will be wired on the a and b sides.

(4) It is not possible to assemble a double solenoid or 3-position solenoid valve to "-MPS".
Order valve block with solenoid valve and carry out expansion.
Refer to page 1093 for instructions on how to expand stations.

(5) It is not possible to install spare wires for station expansion only in advance. Install a valve block with a masking plate.

Reference circuit diagram

The circuit diagram of the manifold model No. (example) on the previous page is as shown below.

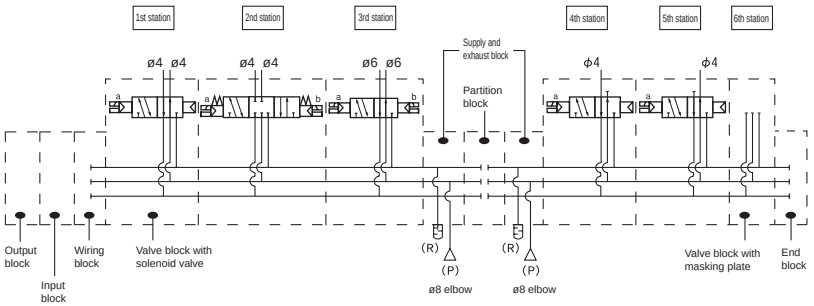

· [ ] indicates each block configuration.
· The manifold station numbers are set in order from the left with the piping port facing forward.
(* The I/O blocks, wiring blocks, supply and exhaust blocks, partition block, and end block are not included in the manifold station No.)
· Select a model No. from the block configurations (pages 1048 to 1063), individual wiring manifolds (pages 977, 982, and 983), and reduced wiring manifolds (pages 992, 994, and 1014 to 1020).
· With piping port facing front, arrangement positions are set in order from the left.
· When the input block and output block are both being installed, the output block will be on the left side with the piping port facing forward.

MW4GA/B/Z2 (individual wiring) block manifold specifications sheet

● Contact ● Quantity set(s) ● Delivery date /

Slip No.	Order No.

Issued / /

Company

Contact

Order No.

● Manifold model No.

MW ☐ G ☐ 2 ☐ 0- ☐ - R1 ☐ ☐ - ☐ - ☐

Ⓐ Model No. Ⓑ Switching position category Ⓒ Port size Ⓓ Wiring method Ⓔ Option Ⓕ Mount Ⓖ Station No. Ⓗ Voltage

When filling in this field, select the model No. from Block configurations (pages 1048 to 1063) and pages 977, 982 and 983.

Part name	Model No.	Layout position 1	2	3	4	5	6	7	8	9	10	11	12	13	14	15	16	17	18	19	20	21	22	23	24	25	26	27	28	29	30	Quantity
Valve block with solenoid valve (Pages 977, 982 and 983)	**NW4G☐2☐0-☐**																															
	NW4G☐2☐1-☐																															
	NW4G☐2☐2-☐																															
	NW4G☐2☐0-☐																															
	NW4G☐2☐0-☐																															
	NW4G☐2☐0-☐																															
	NW3G☐2☐0-☐																															
	NW3G☐2☐0-☐																															
Valve block with masking plate (Page 1050)	**NW4G☐2-MP-☐-R1**																															
	NW4G☐2-MP-☐-R1																															
	NW4G☐2-MP-☐-R1																															
Supply and exhaust block (Page 1052)	**NW4G2-Q☐-☐-☐**																															
	NW4G2-Q☐-☐-☐																															
	NW4G2-Q☐-☐-☐																															
	NW4G2-Q☐-☐-☐																															
Various spacers (Pages 1057 and 1060)	Air supply spacer **W4G2-P☐-☐**																															
	Exhaust spacer **W4G2-R-☐**																															
	Spacer pilot check valve **W4G2-PC-M**																															
	Individual air supply compatible spacer with in-stop valve spacer **W4G2-PIS-☐**																															
Partition block (Page 1052)	**NW4G2-S☐**																															
	NW4G2-S☐																															
	NW4G2-S☐																															
End block (Page 1052)	**NW4G2-E☐L**																															
	NW4G2-E☐R																															

DIN rail	L_T=☐ (How to calculate length page 1096)	Blanking plug								Silencer				Tag plate (attachment)		Accessory
		GWP4-B		**GWP6-B**		**GWP8-B**		**GWP10-B**		**SLW-H8**		**SLW-H10**		**A** or **B**		

MW4GA2 (reduced wiring) block manifold specifications sheet

● Contact ● Quantity set(s) ● Delivery date /

Slip No.	Order No.

Issued / /

Company

Contact

Order No.

● Manifold model No.

MW ☐ GA2 ☐ 0- ☐ - ☐ ☐ ☐ ☐ - ☐ - ☐

Ⓐ Model No. Ⓑ Solenoid position Ⓒ Port size Ⓔ Reduced wiring connection Ⓕ Terminal/connector pin array Ⓖ Option Ⓗ Mount Ⓘ Station No. Ⓙ Voltage

When filling in this field, select the model No. from Block configurations (pages 1048 to 1063) and pages 977 to 980, 982 and 983.

Product name (page)	Model No.	Layout position 1	2	3	4	5	6	7	8	9	10	11	12	13	14	15	16	17	18	19	20	21	22	23	24	25	26	27	28	29	30	Quantity
I/O block (Page 1056) (*2)	NW4G☐2-IN-☐-☐																															
	NW4G☐2-OUT-☐-B																															
Wiring block (Page 1055)	NW4G☐2-T☐ (*1)																															
Valve block with solenoid valve (Pages 992 to 995)	NW4GA2☐0-☐																															
	NW4GA2☐0-☐																															
	NW4GA2☐0-☐																															
	NW4GA2☐0-☐																															
	NW4GA2☐0-☐																															
	NW4GA2☐0-☐																															
	NW3GA2☐0-☐																															
	NW3GA2☐0-☐																															
Valve block with masking plate (Page 1050)	NW4GA2-MPS																															
	NW4GA2-MPD																															
Supply and exhaust block (Page 1052)	NW4G2-Q☐-☐-☐																															
	NW4G2-Q☐-☐-☐																															
	NW4G2-Q☐-☐-☐																															
	NW4G2-Q☐-☐-☐																															
Various spacers (Pages 1057 to 1060)	Air supply spacer W4G2-P☐-☐																															
	Exhaust spacer W4G2-R-☐																															
	Individual air supply with in-stop valve spacer W4G2-PIS-☐																															
Partition block (Page 1052)	NW4G2-☐																															
	NW4G2-☐																															
	NW4G2-☐																															
End block (Page 1052)	NW4G2-☐R																															

DIN rail (*3)	L_7 = ☐ (How to calculate length page 1096)	Blanking plug				Silencer		Tag plate		Cable clamp				Waterproof plug		Accessory
		GWP4-B		GWP6-B		SLW-H8		A		W4G-SCL-18A Applicable cable O.D. ø14.5 to 16.5		W4G-SCL-18B Applicable cable O.D. ø16.5 to 18.5		W4G-XSZ-12		
		GWP8-B		GWP10-B		SLW-H10										
		Cable with D sub-connector (refer to page 1064)				Cable with multi-connector				Multi-connector only						
		N4T-CABLE-DO☐-☐				W4G-RMC-☐				W4G2-RM21WTP-☐						

*1: Specify the model No. for the wiring block in the following manner.

NW4G☐2-T☐

Type of wiring block (Refer to page 1055)

Blank: when T10/T20/T30/T5*/T7*
A : when T8*

2: When the wiring block is reduced wiring T7, the I/O block is side wiring and MW4GB2- $^{IN}_{OUT}$ is selected.

3: T7 is not DIN rail mount.

MW4GB2 (reduced wiring) block manifold specifications sheet

● Contact ● Quantity set(s) ● Delivery date /

Slip No.	Order No.

Issued / /

Company

Contact

Order No.

● Manifold model No.

MW4GB2 ☐ 0- ☐ - ☐ ☐ ☐ ☐ ☐ - ☐ - ☐

Ⓐ Model No. Ⓑ Solenoid position Ⓒ Port size Ⓔ Reduced wiring connection Ⓕ Terminal/connector pin array Ⓖ Option Ⓗ Mount Ⓘ Station No. Ⓙ Voltage

When filling in this field, select the model No. from Block configurations (pages 1048 to 1063) and pages 977 to 980, 982 and 983.

Part name (Page)	Model No.	Layout position 1	2	3	4	5	6	7	8	9	10	11	12	13	14	15	16	17	18	19	20	21	22	23	24	25	26	27	28	29	30	Quantity
I/O block (Page 1056)	**NW4GB2-IN-☐-☐**																															
	NW4GB2-OUT-☐-B																															
Wiring block (Page 1055)	**NW4G☐2-T☐** (*1)																															
Valve block with solenoid valve (Pages 992 to 995)	**NW4GB2☐0-☐**																															
	NW4GB2☐0-☐																															
	NW4GB2☐0-☐																															
	NW4GB2☐0-☐																															
	NW4GB2☐0-☐																															
	NW4GB2☐0-☐																															
	NW4GB2☐0-☐																															
	NW4GB2☐0-☐																															
Valve block with masking plate (Page 1050)	**NW4GB2-MPS-☐**																															
	NW4GB2-MPD-☐																															
Supply and exhaust block (Page 1052)	**NW4G2-Q☐-☐-☐**																															
	NW4G2-Q☐-☐-☐																															
	NW4G2-Q☐-☐-☐																															
	NW4G2-Q☐-☐-☐																															
Various spacers (Pages 1057 to 1060)	Air supply spacer **W4G2-P☐-☐**																															
	Exhaust spacer **W4G2-R-☐**																															
	Spacer pilot check valve **W4G2-PC-M**																															
	Individual air supply with in-stop valve spacer **W4G2-PIS-☐**																															
Partition block (Page 1052)	**NW4G2-☐**																															
	NW4G2-☐																															
	NW4G2-☐																															
End block (Page 1052)	**NW4G2-☐R**																															

DIN rail (*2)	L_7 = ☐ (How to calculate length page 1096)	Blanking plug		Silencer		Tag plate	Cable clamp		Waterproof plug	Accessory
							W4G-SCL-18A	**W4G-SCL-18B**		
		GWP4-B	**GWP6-B**	**SLW-H8**		B	Applicable cable O.D. ø14.5 to 16.5	Applicable cable O.D. ø16.5 to 18.5	**W4G-XSZ-12**	
		GWP8-B	**GWP10-B**	**SLW-H10**						
		Cable with D sub-connector (refer to page 1064)		Cable with multi-connector			Multi-connector only			
		N4T-CABLE-DO☐-☐		**W4G-RMC-☐**			**W4G2-RM21WTP-☐**			

*1: Specify the model No. for the wiring block in the following manner. *2: T7* is not DIN rail mount.

NW4G☐2-T☐

- ☐: Blank: when T10/T20/T30/T5*/T7*; B: when T8*
- ☐: Type of wiring block (Refer to page 1055)

MW4GZ2 (reduced wiring) block manifold specifications sheet

● Contact ● Quantity set(s) ● Delivery date /

Slip No.	Order No.

Issued / /

Company

Contact

Order No.

● Manifold model No.

MW4GZ2 ☐ 0- ☐ - ☐ ☐ ☐ - ☐ - ☐

Ⓐ Model No. Ⓑ Solenoid position Ⓒ Port size Ⓔ Reduced wiring connection Ⓕ Terminal/connector pin array Ⓖ Option Ⓘ Station No. Ⓙ Voltage

When filling in this field, select the model No. from Block configurations (pages 1048 to 1063) and pages 977 to 980, 982 and 983.

Part name (Page)	Model No.	Layout position 1	2	3	4	5	6	7	8	9	10	11	12	13	14	15	16	17	18	19	20	21	22	23	24	25	26	27	28	29	30	Quantity
I/O block (Page 1056)	**NW4GB2-IN-☐-☐**																															
	NW4GB2-OUT-☐-B																															
Wiring block (Page 1055)	**NW4G☐2-T☐** (*1)																															
Valve block with solenoid valve (Pages 992 to 995)	**NW4GZ2☐0-☐**																															
	NW4GZ2☐0-☐																															
	NW4GZ2☐0-☐																															
	NW4GZ2☐0-☐																															
	NW4GZ2☐0-☐																															
	NW4GZ2☐0-☐																															
	NW4GZ2☐0-☐																															
	NW4GZ2☐0-☐																															
Valve block with masking plate (Page 1050)	**NW4GZ2-MPS-☐**																															
	NW4GZ2-MPD-☐																															
Supply and exhaust block (Page 1052)	**NW4G2-Q☐-☐-☐**																															
	NW4G2-Q☐-☐-☐																															
	NW4G2-Q☐-☐-☐																															
	NW4G2-Q☐-☐-☐																															
Various spacers (Pages 1057 to 1060)	Air supply spacer **W4G2-P☐-☐**																															
	Exhaust spacer **W4G2-R-☐**																															
	Spacer pilot check valve **W4G2-PC-M**																															
	Individual air supply with in-stop valve spacer **W4G2-PIS-☐**																															
Partition block (Page 1052)	**NW4G2-☐**																															
	NW4G2-☐																															
	NW4G2-☐																															
End block (Page 1052)	**NW4G2-☐R**																															

Accessory	Blanking plug				Silencer		Tag plate		Cable clamp				Waterproof plug		Accessory
									W4G-SCL-18A		**W4G-SCL-18B**				
	GWP4-B		**GWP6-B**		**SLW-H8**		B		Applicable cable O.D. ø14.5 to 16.5		Applicable cable O.D. ø16.5 to 18.5		**W4G-XSZ-12**		
	GWP8-B		**GWP10-B**		**SLW-H10**										
	Cable with D sub-connector (refer to page 1064)				Cable with multi-connector						Multi-connector only				
	N4T-CABLE-DO☐-☐				**W4G-RMC-☐**						**W4G2-RM21WTP-☐**				

*1: Specify the model No. for the wiring block in the following manner.

NW4G☐2-T☐

Type of wiring block (Refer to page 1055)

Blank: when T10/T20/T30/T5*/T7*
B : when T8*

Common terminal box (T10) wiring specifications sheet (AC specifications only)

* Fill in and attach to the manifold specifications sheet for anything other than double wiring. (Available as custom order)
* Not required with double wiring. (With DC specifications, only standard wiring and double wiring will be supported)

Connector pin No.	Valve No.																							
T10	1	2	3	4	5	6	7	8	9	10	11	12	13	14	15	16	17	18	19	20	21	22	23	24
1																								
2																								
3																								
4																								
5																								
6																								
7																								
8																								
9																								
10																								
11																								
12																								
13																								
14																								
15																								
16																								
17																								
18																								
COM																								
COM																								

Safety Precautions

Be sure to read this section before use.
Refer to Intro Page 59 for general precautions for using valves.

Product-specific cautions: 3, 5-port pilot operated valve W4G2 Series

Design/selection

1. Working environment

⚠ CAUTION

■ IP65 (IEC60529 [IEC529:1989-11]) standards are applied to the test.
Avoid use in conditions where water or coolant directly contacts the valve.

Explanation of IP65 protection characteristic codes and test method

● Degree of protection

Note: IP65 is based on the following testing method.

■ IEC (International Electrotechnical Commission) standards

(IEC60529 [IEC529:1989-11])

IP - □ □

Protection characteristic codes (International Protection)

1st characteristic No. (degree of protection for foreign solid matter)

Grade	Degree of protection	
6	Dust proof 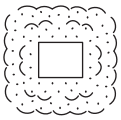	No inflow of dust

2nd characteristic No. (degree of protection for water entry)

Grade	Degree of protection		Overview of test method (fresh water is used)
5	Protection against water jets 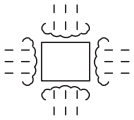	No harmful effects occur even when water is sprayed with nozzles from all directions.	With the testing equipment in the figure below, the sample (exterior) is exposed to water jetting of 1 m^2 per minute for a total of more than 3 minutes from all directions. 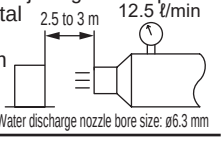

2. 100 VAC specifications

⚠ CAUTION

■ The 100 VAC specification has an integrated full-wave rectifier.
Depending on the SSR used to turn ON/OFF the solenoid valve, recovery failure of the valve may result.
Use caution when selecting SSRs. (Consulting the manufacturer of the relay or PLC is recommended.)

3. Serial transmission device unit

⚠ CAUTION

■ The device unit enters the following status in the case of a communication error.
(1) All input signals are OFF.
(2) All output signals are OFF. (However, if the device unit has an output mode setting switch, it enters the set status.)

Design/selection

4. Surge suppressor

⚠ CAUTION

■ The surge suppressor attached with the solenoid valve is intended to protect the output contacts for the solenoid valve drive. There is no significant protection for the other peripheral devices, and devices could be damaged or could malfunction due to a surge. As well, surges generated by other devices may be absorbed and cause damage such as burning. Note the following points.

(1) The surge suppressor functions to limit solenoid valve surge voltage, which can reach several hundred volts, to a low voltage level that the output contact can withstand. Depending on the output circuit used, this may be insufficient and could result in damage or malfunction. Check whether the surge suppressor can be used within the surge voltage limit of the solenoid valve in use, the output device's withstand pressure and circuit structure, and by the degree of return delay time. When necessary, provide other surge countermeasures. The solenoid valve with surge suppressor can suppress the inverse voltage surge that may occur when the solenoid valve is off to the level in the table below.

Specification voltage	Inverse voltage when OFF
12 VDC	Approx. 27 V
24 VDC	Approx. 47 V

(2) If the output unit is an NPN, a surge voltage equaling the voltage shown in the table above plus the power supply voltage may be applied to the output transistor. Make sure to implement a contact protection circuit to avoid the risk.

[Output transistor protection circuit: Installation example 1]

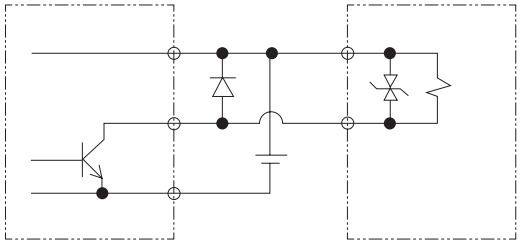

[Output transistor protection circuit: Installation example 2]

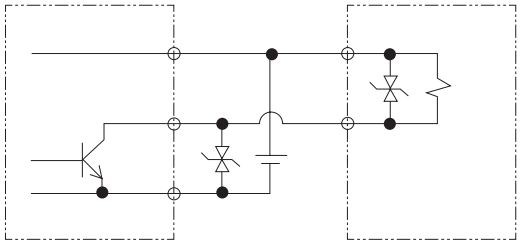

(3) If another device or solenoid valve is connected in parallel to the solenoid valve, the inverse voltage surge generated when the valve is OFF would apply to those devices. Even in the case of a solenoid valve with 24 VDC surge suppressor, a surge voltage may reach negative tens of volts for some models. This inverse voltage may cause damage or malfunction to other components connected in parallel. Avoid parallel connection of devices susceptible to inverse polarity voltages, e.g., LED indicator lamp. When driving several solenoid valves in parallel, the surge from other solenoid valves may enter the surge suppressor of one solenoid valve, and it may burn depending on the current value. When driving several solenoid valves with surge suppressors in parallel, surge current could concentrate at the surge suppressor with the lowest limit voltage and cause similar burning. Due to the variations in surge suppressor limit voltage that exist even among solenoid valves of the same model No., in the worst case the surge suppressor may burn out. Avoid driving multiple solenoid valves in parallel.

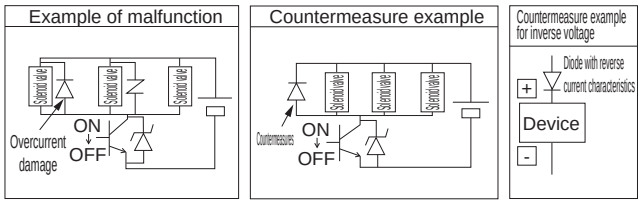

(4) The surge suppressor incorporated in the solenoid valve will often be short-circuited if it is damaged by overvoltage or overcurrent from other solenoid valves. Where there is a failed surge suppressor, if a large current flows when the output is ON, in the worst case scenario, the output circuit or solenoid valve could be damaged or ignited. Do not continue energizing in a state of failure. Additionally, to prevent large currents from continuing to flow, connect an overcurrent protection circuit to the power supply and drive circuit, or use a power supply with overcurrent protection.

Check valve

⚠ CAUTION: The exhaust check valve is a check valve. If the cylinder rod is manually operated directly without pressurization, the check valve opens and the air flow is shut off, preventing cylinder rod adjustment.

Generally, the double acting cylinder connected at the manifold to single acting cylinders or ABR connection valves may malfunction when adversely affected by the back pressure led in by operation of other cylinders. It is possible to select a model equipped with a "check valve" which prevents this malfunctioning. However, this cannot be installed on an all ports closed valve or PAB connection valve where there is no leakage of back pressure.

Example of pneumatic pressure system that may malfunction

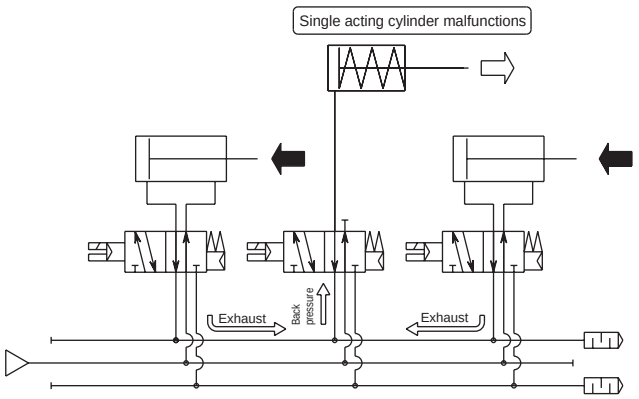

4G series pneumatic pressure system

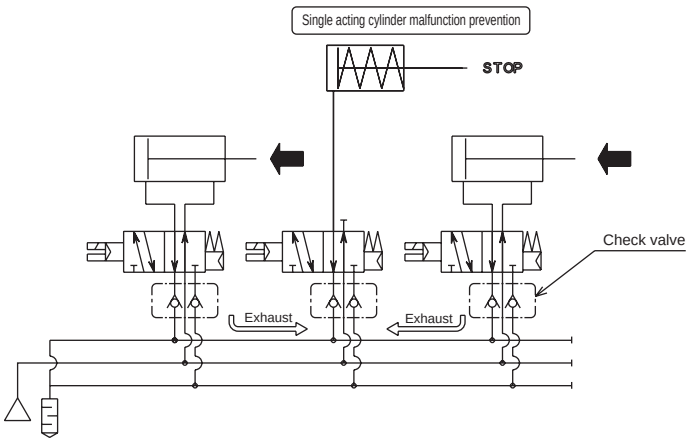

Internal structure

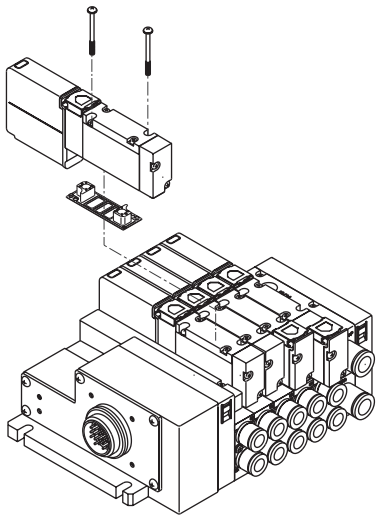

Check valve equipped standard specifications

Model No.	Flow path switching	Option (H) selection
NW3GA210	NC	With
NW3GA2110	NO	With
NW4G$^{A}_{B}$$_{Z}$210	2-position single	With
NW4G$^{A}_{B}$$_{Z}$220	2-position double	With
NW4G$^{A}_{B}$$_{Z}$230	All ports closed	None
NW4G$^{A}_{B}$$_{Z}$240	ABR connection	With
NW4G$^{A}_{B}$$_{Z}$250	PAB connection	None

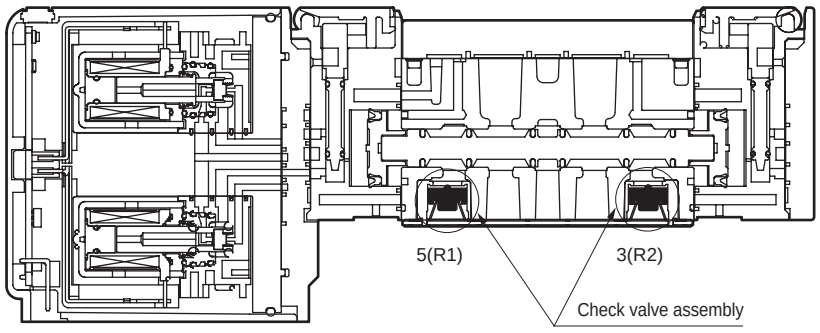

Mounting, installation and adjustment

1. Port indication

⚠ CAUTION

■ For the piping port positions, piping port displays such as 1P, 4A, etc., corresponding to ISO and JIS standards are displayed.

● There is no restriction in valve mounting orientation. The 4 (A) and 2 (B) port positions and 5 (R1) and 3 (R2) port positions are reversed between W4G Series and 4K Series. Check the port codes carefully before piping to prevent reverse operation of cylinders.

Applications	ISO standards	JIS standards
Supply port	1	P
Output port	4	A
Output port	2	B
Exhaust port	5	R1
Exhaust port	3	R2

2. External pilot (K) piping port

⚠ CAUTION

■ The external pilot (K) has a separate pilot air supply. ø6 push-in fitting is used to supply the pilot air, so be careful that the piping connection position is correct. Malfunctions could occur if the piping is incorrect.

Port indication

Applications		Indication (ISO standards)
Pilot air	Air supply port	12/14

* Port A/B pressurization and port R pressurization are not possible.

MW4G2

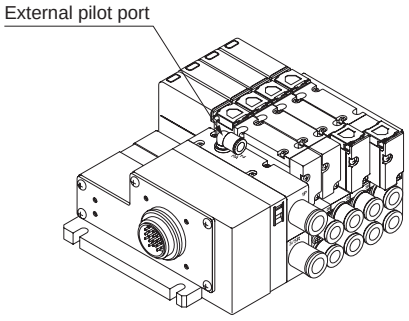

The external pilot air supply port is the ø6 push-in fitting on the top of the supply and exhaust block.

3. How to install manifold

⚠ CAUTION

■ Mounting with DIN rail

● In W4G2 Series, a direct mount manifold can be modified to DIN rail mount manifold. Note that inappropriate mounting may result in fall and damage of the manifold.
If the manifold weighs more than 1 kg in total, or when using in an environment with vibration or impact, fix the DIN rail onto the surface at 50 to 100 mm intervals, and sufficiently confirm that there is no problem with installation before starting operation. Although there is no restriction in mounting direction and orientation, attention should be paid to mounting screw loosening caused by resonance due to vibration that may cause the manifold to fall out during operation.

* For DIN rail mounting bracket kit and DIN rail, refer to the block configurations on page 1062.

■ How to install DIN rail

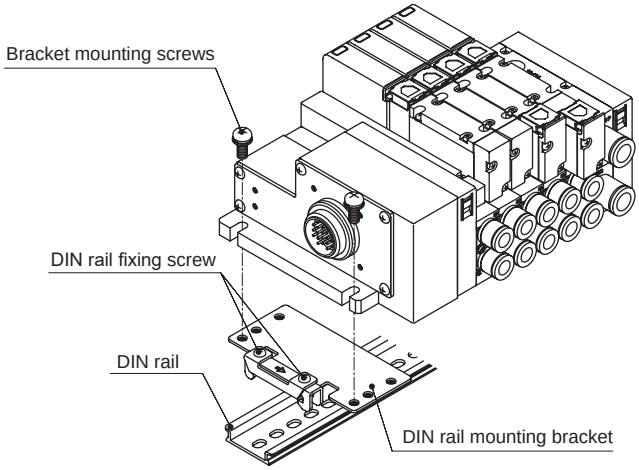

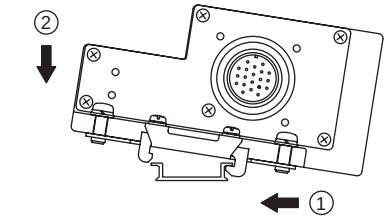

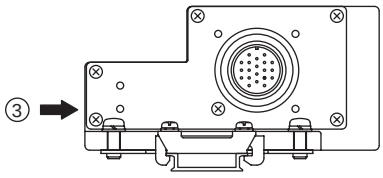

1. Attach the DIN rail mounting bracket. (Tightening torque: 1.8 to 2.3 N·m)
2. Engage the jaws with the DIN rail in order from (1) to (2).
3. Push in the direction of (3).
4. Tighten the DIN rail fixing screws. (Tightening torque: 1.2 to 1.6 N·m)

Mounting, installation and adjustment

4. Port filter

⚠CAUTION

■ The port filter prevents the entry of foreign matter, and prevents problems from occurring in the valve. As this does not improve the quality of the compressed air, read Warnings and Precautions in the Introduction, then mount, install, and adjust the filter accordingly.
Do not detach or press down the port filter forcibly. The filter could deform, causing problems. If contaminants and foreign matters are found on the filter surface, blow them lightly, or remove them by tweezers, etc.

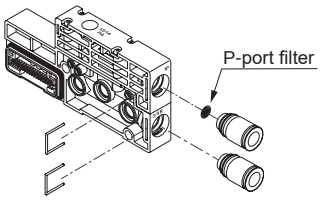

P-port filter (standard) example of embedding

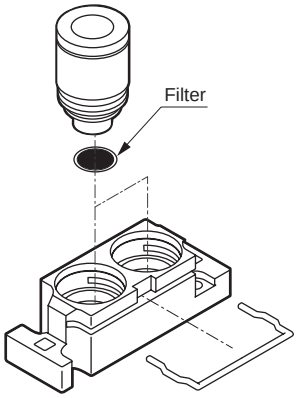

A/B port filter option example of combination

5. Serial transmission device unit

⚠CAUTION

■ Be sure to shut off the power supply externally before installation and wiring. Failure to do so may result in electric shock or damage.

■ Check the rated voltage and terminal layout for correct wiring. If the connected power supply is not the rated voltage or wiring is wrong, fire or damage may occur.

■ Use the specified torque to tighten the waterproof connector and terminal screw. If tightening is done haphazardly, fire or malfunction may occur.

■ Do not bend or pull forcibly the communication cable and power cable connected to the unit.

■ Be sure to use the specified communication cable. Keep away from power lines and high-tension lines.

■ Do not use submerged in water.

Use/maintenance

1. Common

⚠CAUTION

■ Continuous energizing for long periods may accelerate degradation of the solenoid valve. Furthermore, use caution under the following working conditions, as with continuous energization:
· When energized time exceeds non-energized time in intermittent energizing
· When one energizing session exceeds 30 minutes in intermittent energizing
Consider heat dissipation when installing the product.

2. Valve replacement

⚠CAUTION

■ While replacing the valve, be careful not to drop the gasket and pilot check valve.

	Screw size	Proper tightening torque (N·m)
W4G2	M2.5	0.25 to 0.30

3. Manual override

⚠WARNING

General

■ This valve is an internal pilot operated. If air is not supplied to the P-port, the main valve will not be switched even if the manual override is operated.

■ A manual protective cover is attached as standard. The protective cover is closed when shipped. Therefore, the manual override device cannot be seen when delivered. Open the protective cover to operate the manual override. Note that the protective cover will not close unless the locking manual override is released.

■ The manual override attached is standard for both the non-locking and locking. Holding down and turning the button locks the valve. Be sure to press down before rotating to lock. If manual override is turned without being pressed down, it could be damaged or air could leak.

■ How to open and close manual protection cover

Do not excessively force the manual protective cover when opening and closing it. Excessive external force could cause failures. (Below 5 N)

W4G2 Series Rotation

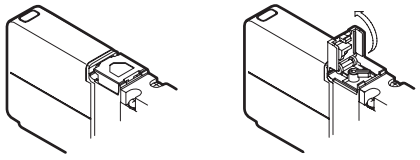

■ How to operate manual override

● Push non-locking operation

Push straight on the center of the axis of the manual button in the direction of the arrow, until it stops. Release to cancel.

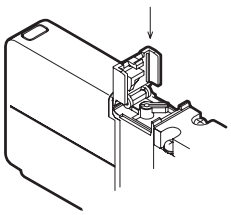

● Push/locking operation

Push and hold the button and turn it 90° in the direction of the arrow. The function is not canceled even when the button is released.

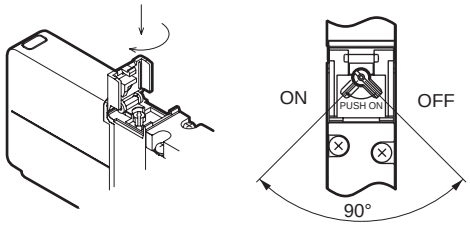

■ When conducting manual operations, make sure that there are no people near the operating cylinder.

⚠CAUTION

■ Manual override with OFF function

Pilot air supply when energized is stopped forcibly, allowing you to switch the main valve even when power is applied. In addition, be careful as when the OFF function is used, the cylinder will immediately operate with 2-position single or 3-position ABR connection and PAB connection.

Output port destination correspondence chart

Solenoid position			OFF function (energized, manual override)		Non-energized, manual
			No operation	Operation	Operation
2-position	Single	Sol energized→ a	4(A)	2(B)	—
	Double	Sol energized→ a	4(A)	4(A)	2(B)
		Sol energized→ b	2(B)	2(B)	4(A)
3-position	All ports closed	Sol energized→ a	4(A)	4(A)	2(B)
		Sol energized→ b	2(B)	2(B)	4(A)
	ABR connection	Sol energized→ a	4(A)	—	2(B)
		Sol energized→ b	2(B)	—	4(A)
	PAB connection	Sol energized→ a	4(A)	4(A)/2(B)	2(B)
		Sol energized→ b	2(B)	4(A)/2(B)	4(A)

* Push non-locking operation for manual override on de-energized side

■ How to operate the manual override with OFF function

● Normal use (push/non-locking operation)

Push straight on the center of the axis of the manual button in the direction of the arrow, until it stops. Release to cancel.

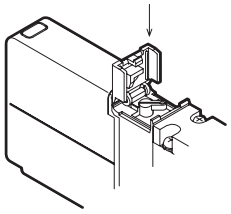

● Using the OFF function (when energized, push/locking operation)

Push and hold the button and turn it 90° in the direction of the arrow. The function is not canceled even when the button is released.

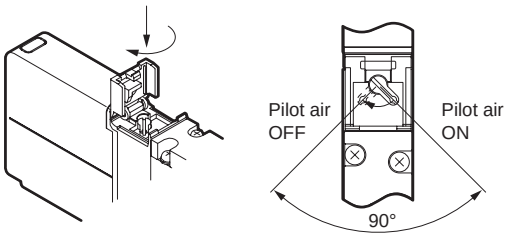

■ When conducting manual operations, make sure that there are no people near the operating cylinder.

Use/maintenance

4. How to replace cartridge fitting

⚠CAUTION

■ Check procedures before changing the push-in fitting size. If installed incorrectly, or if the tightening of the mounting screw is insufficient, air leakage could occur.

■ Body piping (A)

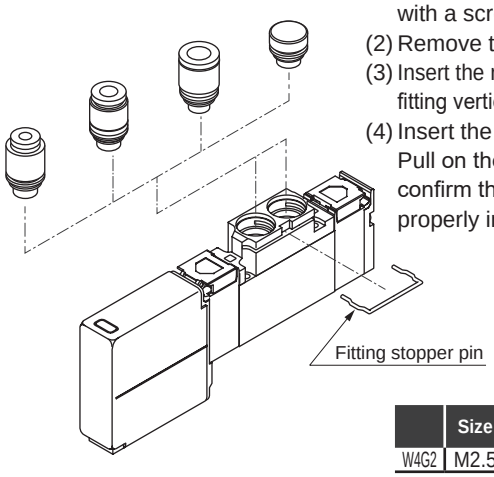

(1) Remove the stopper pin with a screwdriver.
(2) Remove the fitting.
(3) Insert the replacement fitting vertically to the end.
(4) Insert the stopper pin. Pull on the fitting to confirm that it is properly installed.

	Size	Tightening torque (N·m)
W4G2	M2.5	0.25 to 0.30

■ Base side piping (B)

■ Base bottom piping (Z)

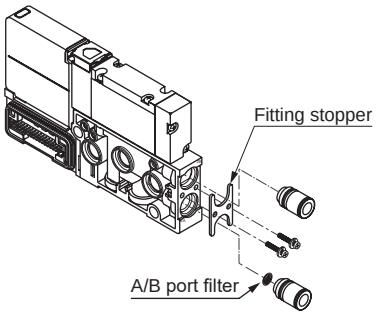

(1) Remove the mounting screw.
(2) Pull out the stopper plate and fitting together.
(3) Align the groove of the replacement fitting with the stopper plate and assemble them temporarily.
(4) Assemble the stopper plate with the fitting, and tighten the mounting screw. Pull on the fitting to confirm that it is properly installed.

Model No. of cartridge push-in fitting

Part name	Model No.
ø4 straight	4G2-JOINT-C4
ø6 straight	4G2-JOINT-C6
ø8 straight	4G2-JOINT-C8
ø6 elbow	4G2-JOINT-CL6, CLL6
ø8 elbow	4G2-JOINT-CL8, CLL8
Plug cartridge	4G2-JOINT-CPG

5. How to change the piping connection

⚠CAUTION

■ When replacing the plate or fitting adaptor on the body, changing the body piping and base piping, or changing the push-in fitting and female thread of body piping, be sure to use an appropriate tightening torque since air may leak if the mounting screws are loose.

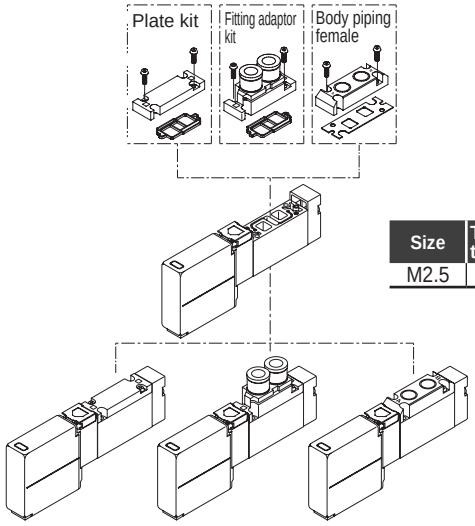

Size	Tightening torque (N·m)
M2.5	0.25 to 0.30

Plate kit

Kit model No.	Set parts
4G2-PLATE-KIT	Plate (1), gasket (1), mounting screw (2)

Fitting adaptor kit

Part name		Kit model No.	Set parts
ø4 fitting adaptor kit	For NC	4G2-JNT-ADAPTOR-KIT-C4NC	Fitting adaptor
	For NO	4G2-JNT-ADAPTOR-KIT-C4NO	Push-in fitting (2) (NC, NO: 1)
		4G2-JNT-ADAPTOR-KIT-C4	(NC, NO: Plug cartridge 1)
ø6 fitting adaptor kit	For NC	4G2-JNT-ADAPTOR-KIT-C6NC	Gasket
	For NO	4G2-JNT-ADAPTOR-KIT-C6NO	Stopper pin
		4G2-JNT-ADAPTOR-KIT-C6	Mounting screws (2)
ø8 fitting adaptor kit	For NC	4G2-JNT-ADAPTOR-KIT-C8NC	
	For NO	4G2-JNT-ADAPTOR-KIT-C8NO	
		4G2-JNT-ADAPTOR-KIT-C8	

Female thread adaptor kit

Kit model No.	Set parts
4G2-FML-ADAPTOR-KIT	Female thread adaptor (1), gasket (1), mounting screw (2)

6. Serial transmission device unit

⚠CAUTION

- Do not touch the terminals and connectors while power is applied. There is a risk of electric shock.
- Shut the power OFF externally before cleaning or tightening the screws.
- Do not disassemble or modify this product. Doing so may result in damage or malfunction.

W4G4

Pilot operated 5-port valve, plug-in manifold

Overview

Plug-in manifold W4G4 Series meets the needs of the times by providing excellent performance in space-saving, usability, service life and power consumption.

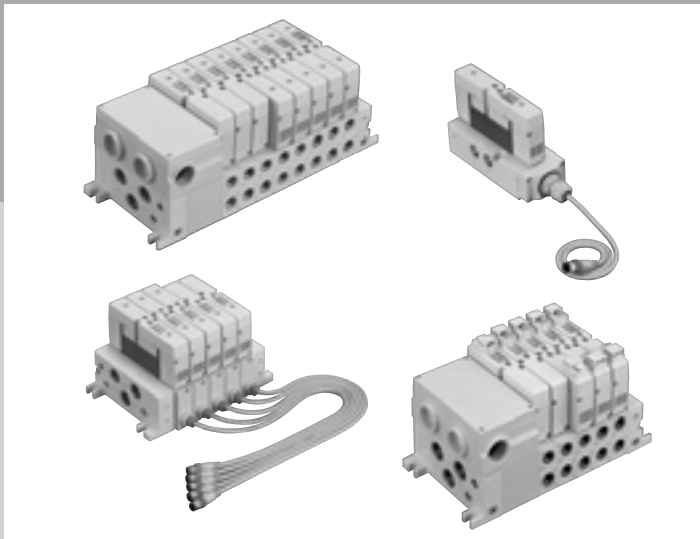

Features

40% less power consumption

Adopting the 1 W coil has enabled saving a large amount of power. (DC)

30% less installation space

Shortening the valve width and length has allowed for significant downsizing. (30% less than conventional models)

Improved safety and reliability

Rubber cover for manual override button.
Prevents intake of foreign matter leading to misoperation.

Degree of protection of IP65 or equivalent

The dust-proof and water jet-proof structure of IP65 or equivalent is suitable for harsh environments.

Easy expansion

Connector interface between the manifold blocks.
Work is simplified and valve expansion is easy.

Flexible positioning of wiring blocks

Wiring block can be mounted on the right (right-sided spec.) or left (left-sided spec.) of the manifold body as desired.

CONTENTS

Product introduction 1112
Series variation 1114
Electrical connections list (wire connections/circuit) 1116

Discrete valve

● Base side piping (W4GB4) 1118
● Base bottom piping (W4GZ4) 1118

Individual wiring manifold

● Base side piping (MW4GB4-R1) 1124
● Base bottom piping (MW4GZ4-R1) 1124

Reduced wiring manifold

● Base side piping (MW4GB4-T*) 1128
● Base bottom piping (MW4GZ4-T*) 1128

Block components 1146
Related products (Discrete air supply spacer/ discrete exhaust spacer/cable clamp/tie rod/ blanking plug, etc.) 1155
Internal structure and parts list 1157
Technical data
(1) Pneumatic system selection guide 1160
(2) Notes on wiring 1164
(3) How to expand reduced wiring manifold 1176
Manifold and wiring specifications sheets 1180
⚠ Safety precautions 1186

Slim profile

Plug-in manifold **W4G4** Series meets the needs of the times by providing excellent performance in space-saving, usability, service life and power consumption.

Driving compatible up to ø125 cylinders.

MW4GB4-T10

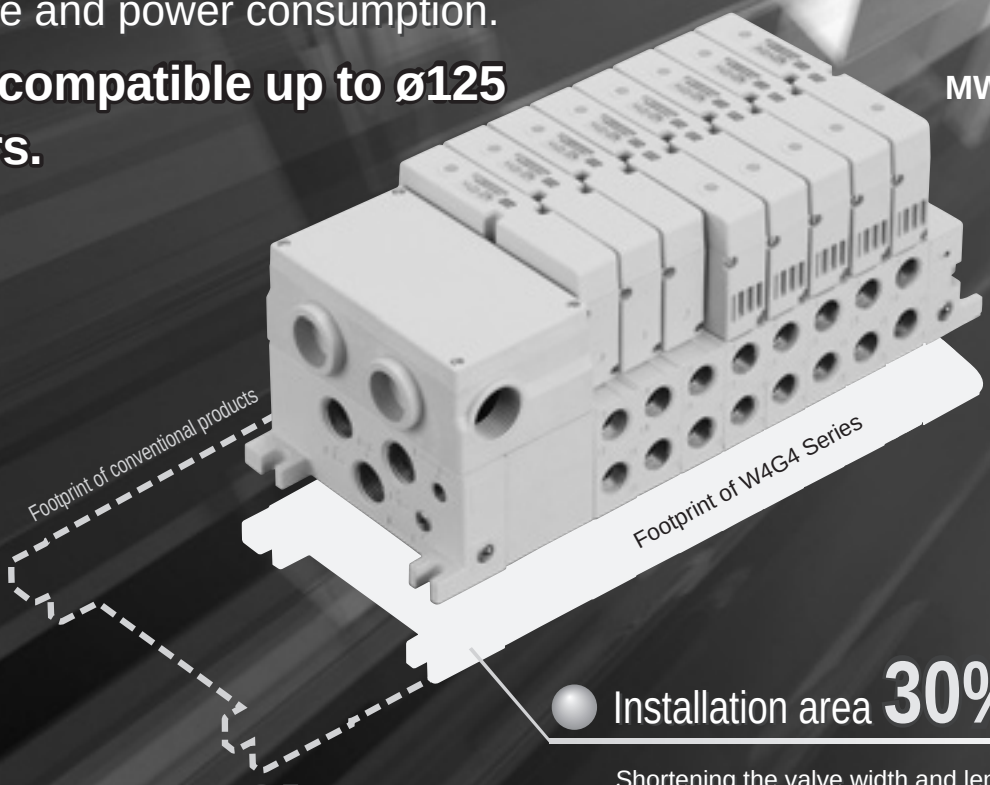

Installation area 30% LESS

Shortening the valve width and length has enabled significant downsizing.
(30% less than conventional models)

Power consumption 40% LESS

Adopting the 1 W coil has enabled saving a large amount of power. (DC)

Flexible positioning of wiring blocks

Wiring block can be mounted on the right (right-sided spec.) or left (left-sided spec.) of the manifold body as desired.

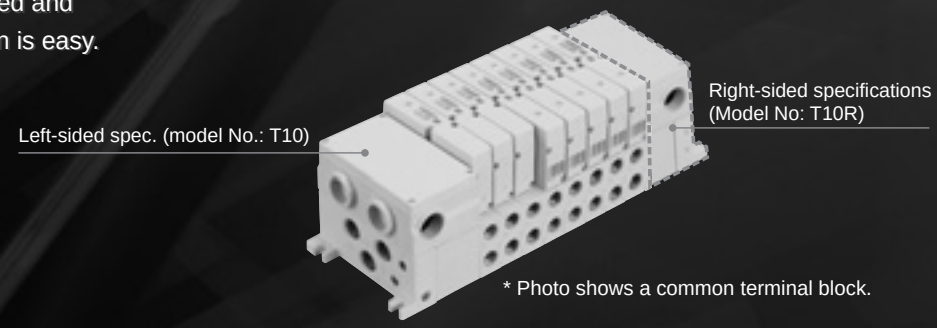

* Photo shows a common terminal block.

Easy expansion

Connector interface between the manifold blocks. Work is simplified and valve expansion is easy.

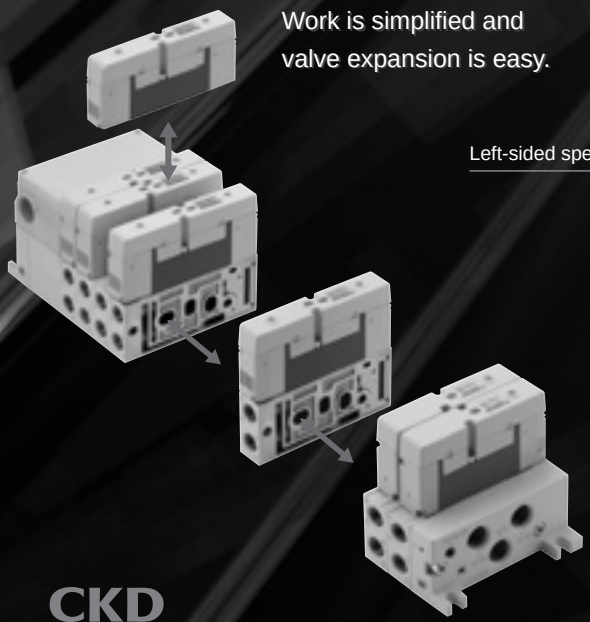

W4G4 Series

Wide array of electrical connections

Various serial transmission connections including CC-Link, DeviceNet, UNIWIRE, etc., are available in addition to the common terminal block, D-sub-connector and I/O connector (individual wiring).

Common terminal block
I/O connector
D sub-connector

Serial transmission
- CC-Link
- DeviceNet
- EtherCAT
- CC-Link IEF Basic
- PROFINET

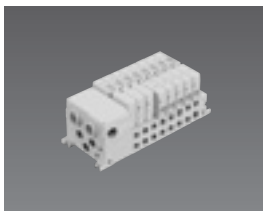

Improved safety and reliability

Rubber cover for manual override button. Prevents intake of foreign matter leading to misoperation.

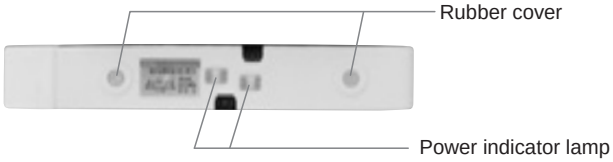

Uses 2-color display lamp

Orange (solenoid a) indicator and green (solenoid b) indicator lamp when power is ON.

Abundant options

Locking manual override



How to operate the manual override

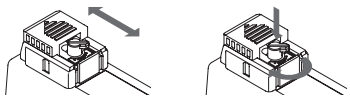

·Push & non-locking operation
Press the manual button.
·Push & locking operation
By pressing the manual button till it hits the bottom and turning the button clockwise by 90 degrees, the button will lock.

Rc3/8 back piping

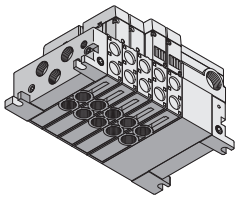

Common exhaust block

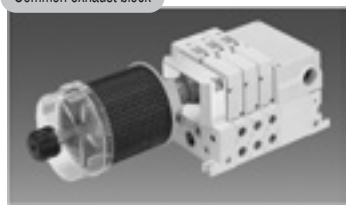

Simple, easy piping

The piping fitting side is flat without protrusion of valves, not interfering with rotation of a wrench or similar tool, thus promoting efficient piping work.

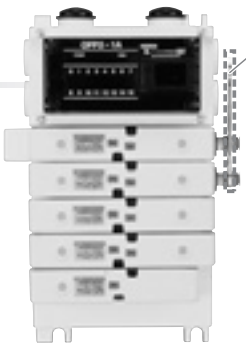

Wrench can be rotated at a large angle.

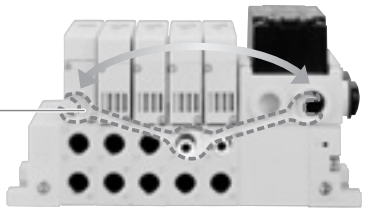

Series variation/appearance			Model No.		Position Number of solenoids JIS symbol	Valve performance: Flow characteristics C [dm³/(s•bar)] *1	Valve performance: Cylinder bore size	Voltage: 100 VAC (1)	Voltage: 24 VDC (3)	Voltage: 12 VDC (4)	Voltage: 110 VAC (5)
Single unit	Base side piping	W4GB4*0 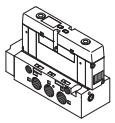	**W4GB4**		● 5-port valve 2-position single 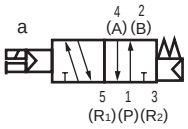 2-position double 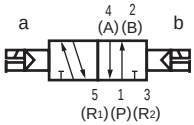 3-position all ports closed 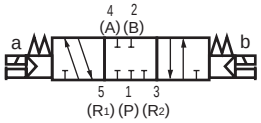 3-position A/B/R connection 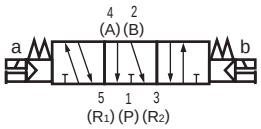 3-position P/A/B connection 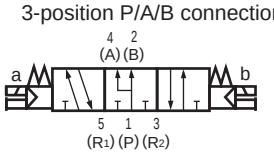	to 7.3	to ø125	●	●	●	●
	Base bottom piping	W4GZ4*0 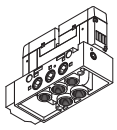	**W4GZ4**					●	●	●	●
Individual wiring manifold	Base side piping	MW4GB4*0 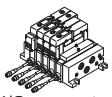 I/O connector (R1)	**MW4GB4 (NW4GB4)**	Individual wiring (-R1)		to 8.3	to ø125		●	●	
	Base bottom piping	MW4GZ4*0 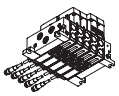 I/O connector (R1)	**MW4GZ4 (NW4GZ4)**						●	●	
Reduced wiring manifold	Base side piping	MW4GB4*0  Common terminal block (T10)  Common terminal block (T10R)  D-sub-connector (T30) (custom order)  D-sub-connector (T30R) (custom order) 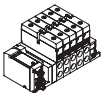 Serial transmission (T7*)	**MW4GB4 (NW4GB4)**	Common terminal block Left-sided spec. (-T10) Right-sided spec. (-T10R)		to 8.3	to ø125	●	●	●	●
				D-sub-connector Left-sided spec. (-T30) Right-sided spec. (-T30R)				●	●	●	●
				Serial transmission Serial transmission Left-sided spec. (-T7**)					●		
	Base bottom piping	MW4GZ4*0  Common terminal block (T10)  Common terminal block (T10R) 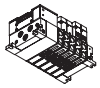 D-sub-connector (T30)  D-sub-connector (T30R) 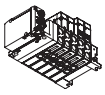 Serial transmission (T7*)	**MW4GZ4 (NW4GZ4)**	Common terminal block Left-sided spec. (-T10) Right-sided spec. (-T10R)		to 8.3	to ø125	●	●	●	●
				D-sub-connector Left-sided spec. (-T30) Right-sided spec. (-T30R)				●	●	●	●
				Serial transmission Left-sided spec. (-T7*)					●		

*1: Effective cross-sectional area “S” and sonic conductance “C” are converted as S x 5.0 ≈ C.

Degree of protection	Switching position						A/B piping connection port											Electrical connections					Page
	2-position		3-position			Mix	Push-in fitting				Female thread							Terminal block	IO Connector	Common terminal block	D-sub-connector (Custom order)	Serial transmission	
	Single	Double	All ports closed	ABR connection	PAB connection		ø8	ø10	ø12	Mix	Rc 1/4	Rc 3/8	G 1/4	G 3/8	NPT 1/4	NPT 3/8	Mix						
							C8	C10	C12	CX	08	10	08G	10G	08N	10N	HX	Blank	R1	T10	T30	T7□	
IP65	●	●	●	●	●						●	●	●	●	●	●		●	●				1118
IP65	●	●	●	●	●						●	●	●		●			●	●				1118
IP65	●	●	●	●	●	●	●	●	●	●	●	●	●	●	●	●	●		●				1124
IP65	●	●	●	●	●	●					●		●		●		●		●				1124
IP65	●	●	●	●	●	●	●	●	●	●	●	●	●	●	●	●	●			●			1128
-	●	●	●	●	●	●	●	●	●	●	●	●	●	●	●	●	●				●		
IP65	●	●	●	●	●	●	●	●	●	●	●	●	●	●	●	●	●					●	
IP65	●	●	●	●	●	●					●	●	●		●		●			●			1128
-	●	●	●	●	●	●					●	●	●		●		●				●		
IP65	●	●	●	●	●	●					●	●	●		●		●					●	1128

Electrical connections

Single unit

Blank Terminal block

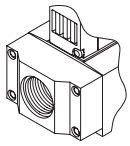

R1 I/O connector (for DC)

● **Lead wire length**
500 mm

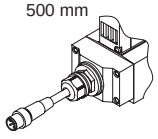

Individual wiring manifold

R1 I/O connector (for DC)

● **Lead wire length**
500 mm

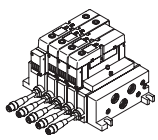

Reduced wiring manifold

T10 Common terminal block (left-sided specifications)

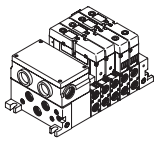

T10R Common terminal block (Right-sided spec.)

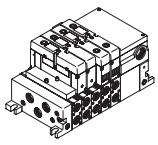

T30 D-sub-connector (Left-sided spec.)

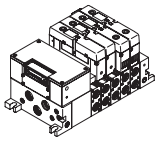

(Custom made)

T30R D-sub-connector (Right-sided spec.)

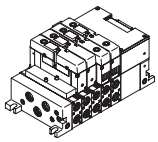

(Custom order)

T7* Serial transmission (Left-sided spec.)

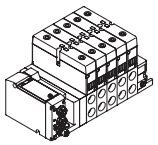

Manual override

Blank Non-locking/locking common manual override

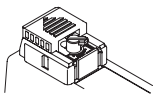

M Non-locking manual override (standard)

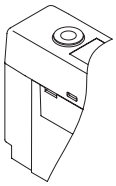

M7 Manual override with OFF function

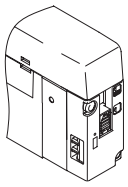

● **Locking**
Slide upward to "turn OFF pilot air"
Original position in normal use

Other options

K External pilot

Separate circuits for main and pilot pressure.

A Coolant proof

Select for coolant inflow measures.

F A/B port filter integrated

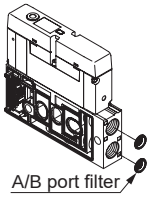

Z1 Air supply spacer

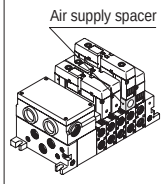

Z3 Exhaust spacer

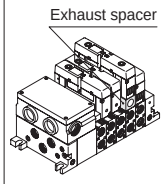

Common exhaust block/ with exhaust cleaner

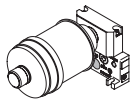

Partition block

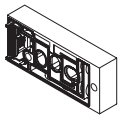

Electric connection circuit diagram (inside solenoid valve)

With lamp/surge suppressor (standard)

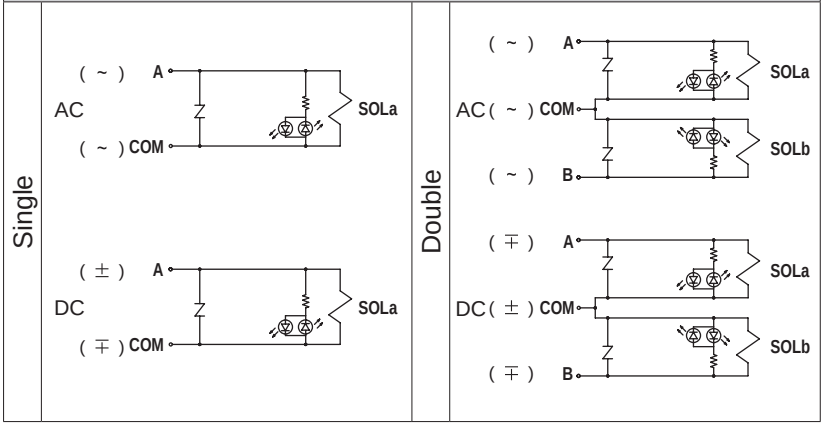

MEMO

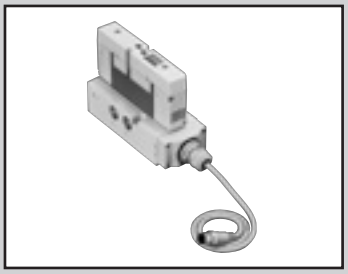

Single unit
Base side piping/base bottom piping

W4GB4/W4GZ4 Series

● Cylinder bore size: ø63 to ø125

CE (applies to DC voltage) Refer to the Ending for details. RoHS

Common specifications

Item	W4GB4/W4GZ4
Valve and operation	Pilot operated soft spool valve
Working fluid	Compressed air
Max. working pressure MPa	1.0 (≈150 psi, 10 bar)
Min. working pressure MPa	0.2 (≈29 psi, 2 bar) (*3)
Proof pressure MPa	1.50 (≈220 psi, 15 bar)
Ambient temperature °C	-5 (23°F) to 55 (131°F) (no freezing)
Fluid temperature °C	5 (41°F) to 55 (131°F)
Manual override	Non-locking (standard)
Lubrication (*1)	Not required
Degree of protection (*2)	Dust proof/jet proof (IP65)
Vibration resistance m/s^2	49 or less
Shock resistance m/s^2	294 or less
Atmosphere	Cannot be used in corrosive gas environments

*1 : Use turbine oil Class 1 ISO VG32 for lubrication.
Note that excessive lubricant may cause unstable operation.
*2 : Tested according to the test method for IP65 (IEC60529 (IEC529: 1989-11)) standards.
Refer to page 1186 for details.
*3 : The working pressure range is 0 to 1.0 MPa when the external pilot (option code: K) is selected. Set the external pilot pressure between 0.2 and 1.0 MPa.

Electrical specifications

Item			W4GB4/W4GZ4
Rated voltage V	AC		100(50/60 Hz) 110(50/60 Hz)
	DC		12,24
Voltage fluctuation range			±10%
Starting current A	AC	100 V	0.056/0.044
		110 V	0.051/0.040
	DC	12 V	-
		24 V	-
Holding current A	AC	100 V	0.028/0.022
		110 V	0.025/0.020
	DC	12 V	0.100
		24 V	0.050
Power consumption W (*4)	AC	100 V	1.8/1.5
		110 V	
	DC	12 V	1.2
		24 V	
Thermal class			B (molded coil)

*4: Surge suppressor and indicator are supplied as standard.

JIS symbol

● 5-port valve

2-position single

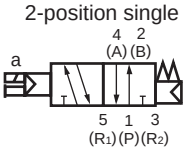

2-position double

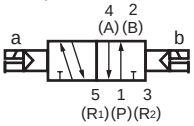

3-position all ports closed

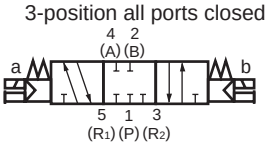

3-position A/B/R connection

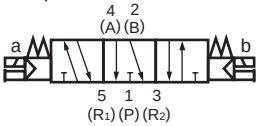

3-position P/A/B connection

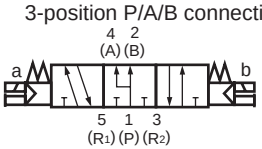

Individual specifications

Item		W4GB4	W4GZ4
Port size	P/A/B port	Rc1/4, Rc3/8, G 1/4, G 3/8, NPT1/4, NPT3/8	
	R-port	Rc1/4, Rc3/8, G1/4, G 3/8, NPT 1/4, NPT3/8	Rc1/4, G1/4, NPT1/4
	PA/PR-port	Rc1/8, G1/8, NPT1/8	Rc1/8, G1/8, NPT1/8

Performance/characteristics by model

Item			W4GB4/W4GZ4	
			ON	OFF
Response time ms	2-position	Single	30	38
		Double	30	-
	3-position	ABR connection	50	58

The response time is the value with a supply pressure of 0.5 MPa at 20°C and with no lubrication. It depends on the pressure and the lubricant quality.

Weight

Item			Terminal block	I/O connector
Weight g	2-position	Single	701(257)	755(257)
		Double	745(301)	799(301)
	3-position		777(332)	831(332)

Values in ( ) do not include the discrete sub-plate.

Flow characteristics

Model No.	Solenoid position		P→A/B		A/B→R	
			C[dm^3/(s·bar)]	b	C[dm^3/(s·bar)]	b
W4GB4	2-position		7.7	0.31	7.3	0.16
	3-position	All ports closed	6.6	0.19	6.4	0.21
		ABR connection	6.5	0.15	7.3	0.04
		PAB connection	7.4	0.21	7.1	0.16

*1: Effective cross-sectional area S and sonic conductance C are converted as S ≈ 5.0 x C.
*2: Values of flow characteristics are for Rc3/8 port size.

How to order

● Single unit

W4GB4 **3** **0** — **10** - **R1** **MF** - **3**

W4GZ4 **3** **0** — **10** - **R1** **M7** - **3**

● Single sub-plate only

W4GB4 — **SP** - **10** - **R1** **K**

W4GZ4 — **SP** - **10** - **R1** **K**

● Discrete valve for integrated base(*7) Sub-plate

W4GB4 **1** **9-00** — **M** - **3**

Ⓐ Model No. Ⓑ Solenoid position Ⓒ Port size Ⓓ Electrical connections Ⓔ Option Ⓕ Voltage

Ⓐ Model No.	Single unit		Discrete sub Plate only		Discrete valve
	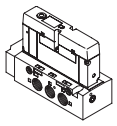		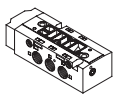		
	W4GB4	W4GZ4	W4GB4	W4GZ4	W4GB4
Ⓑ Solenoid position					
1 2 position single	●	●			●
2 2-position double	●	●			●
3 3-position all ports closed	●	●			●
4 3-position ABR connection	●	●			●
5 3-position PAB connection	●	●			●
Ⓒ Port size [ports 1(P), 2(B), 4(A)]					
08 Rc1/4	●	●(*1)	●	●(*1)	
10 Rc3/8	●	●(*1)	●	●(*1)	
08G G1/4	●	●(*2)	●	●(*2)	
10G G3/8	●		●		
08 N NPT1/4	●	●(*3)	●	●(*3)	
10 N NPT3/8	●		●		
Ⓓ Electrical connections (lamp and surge suppressor provided as standard)					
Blank Terminal block	●	●	●	●	●
R 1 I/O connector (for DC, 500 mm) (*4)	●	●	●	●	
Ⓔ Option					
Blank No option (*5) (Non-locking/locking model common manual override when M and M7 are not selected.)	●	●			●
M Manual override of non-locking (standard)	●	●			●
M7 Lock with pilot air OFF function (*6)	●	●			●
K External pilot	●	●	●	●	
A Coolant proof	●	●			●
F Port A/B filter	●	●	●	●	
Ⓕ Voltage					
1 100 VAC	●	●			●
3 24 VDC	●	●			●
4 12 VDC	●	●			●
5 110 VAC	●	●			●

indicates not available.

Precautions for model selection

*1:Ports 3 (R2) and 5 (R1) of base bottom piping are Rc1/4.
*2:Ports 3 (R2) and 5 (R1) of base bottom piping are G1/4.
*3:Ports 3 (R2) and 5 (R1) of base bottom piping are NPT1/4.
*4:I/O connector is DC voltage type only.
*5:Do not select M and M7 when selecting the manual override of non-locking/locking common.
*6:Includes both the manual override of non-locking and the lock with pilot air OFF function. The manual override of non-locking/locking common and the lock with pilot air OFF function cannot be selected together.
*7:As there is no body gasket attached, use the body gasket attached with the valve block.

Electrical connections

Name	Terminal block	I/O connector (for DC)
Code	Blank	R1
Shape Terminal layout	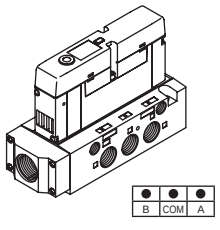	M12 4-pin Male (plug) 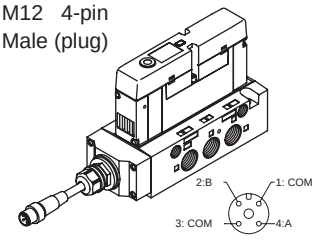

Parts kit No. for terminal block

● Cable clamp (with gasket)

Model No.	Description
W4G-OA-W1608C1	Used to protect cables from dust and jetting water.

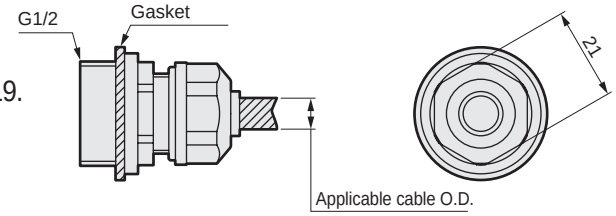

Applicable cable O.D.: ø6 to ø8
(reference value)
Cable clamp body tightening torque: 2.0 to 2.4 N·m
Tightening cap tightening torque: 0.5 to 0.7N·m

Coolant proof specifications

Can be selected with "How to order" Item Ⓔoption "A" on page 1119.

Specifications for rechargeable battery

(Catalog No. CC-1226A)

●For use in the rechargeable battery manufacturing process, materials used for all parts are limited

** - Voltage - **P40**

CE marking specifications

Target: DC voltage

** - Voltage - **ST**

・ Standard voltage of 24 VDC or less is CE marking-compatible even if the model No. is not indicated with "ST".

Dimensions

W4GB410 Side piping

● Terminal block (blank)

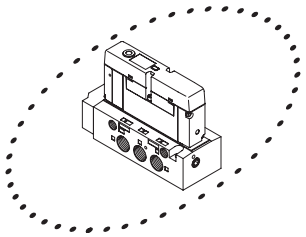

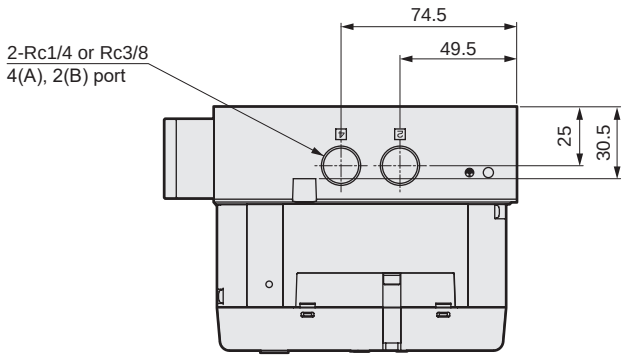

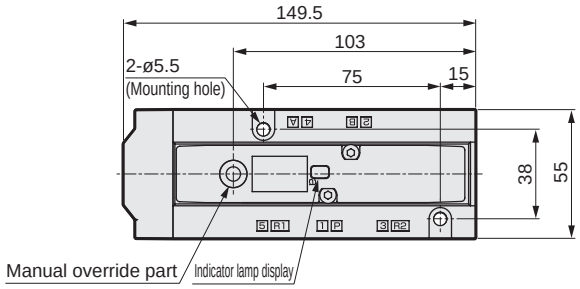

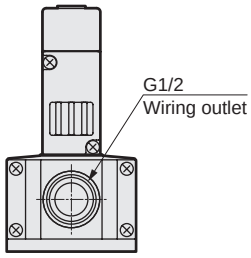

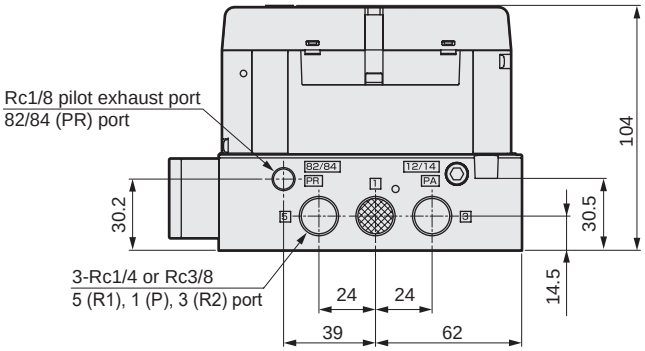

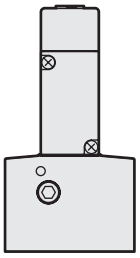

W4GZ410 Rear piping

● Terminal block (blank)

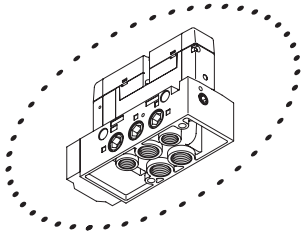

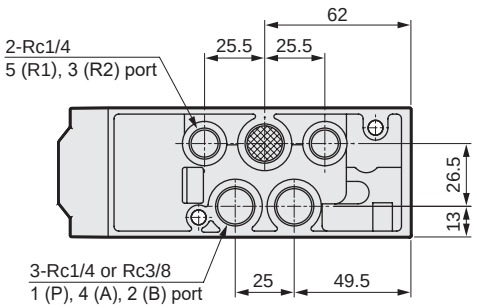

Dimensions

W4GB420 Side piping

● Terminal block (blank)

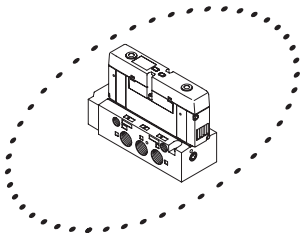

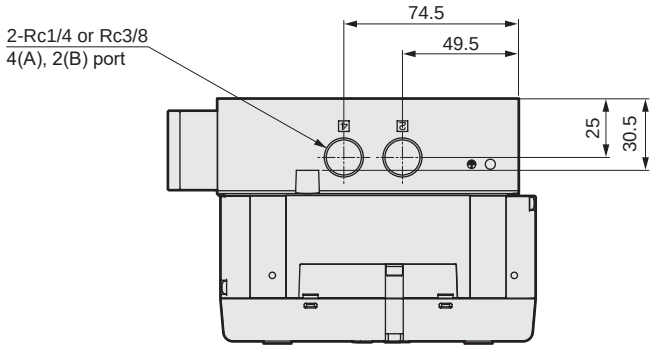

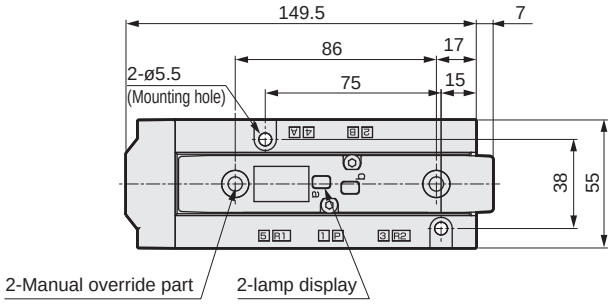

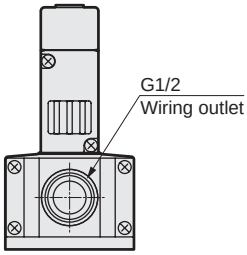

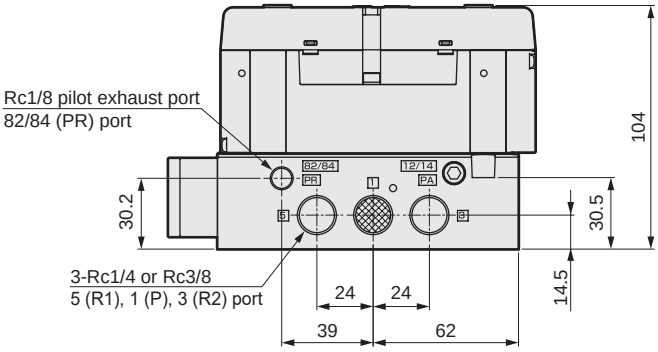

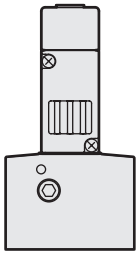

W4GZ420 Rear piping

● Terminal block (blank)

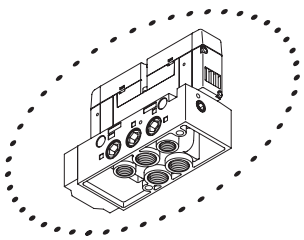

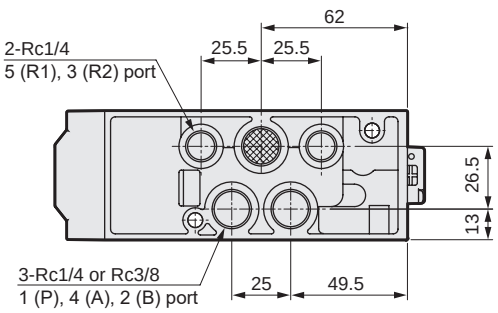

Dimensions

W4GB4$^{3}_{4}_{5}$0 Side piping

● Terminal block (blank)

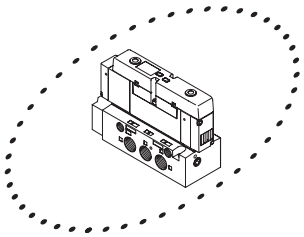

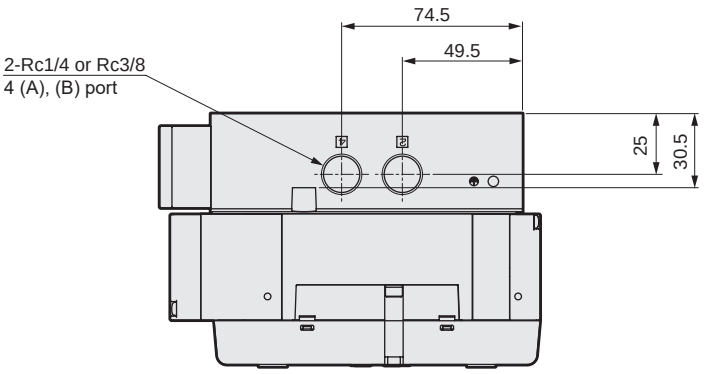

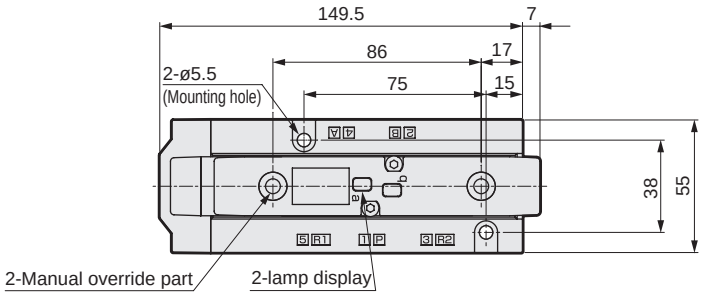

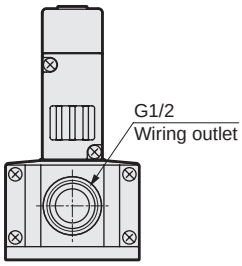

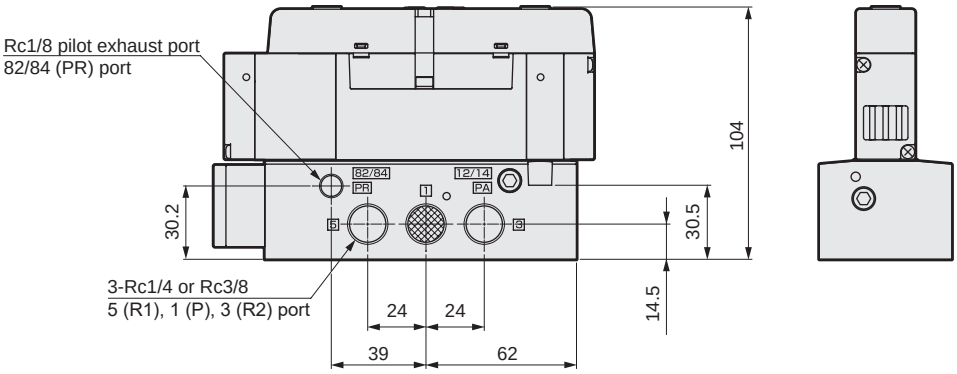

W4GZ4$^{3}_{4}_{5}$0 Rear piping

● Terminal block (blank)

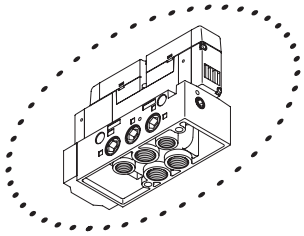

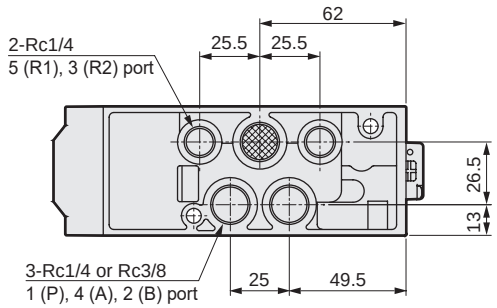

Dimensions

● Non-locking/locking common manual override (blank)

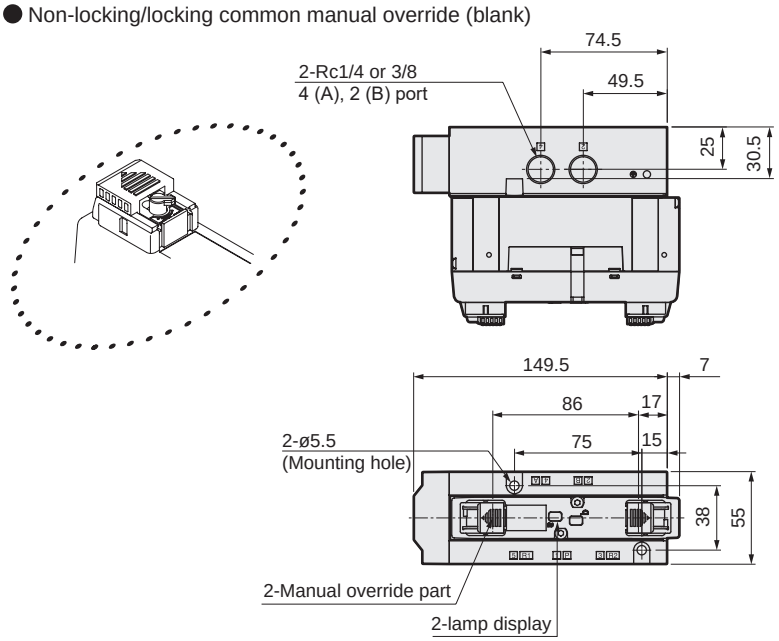

● I/O connector (R1)
Cable used: VA-4DBXO5KUG3-CKD276-PG7 (Correns)

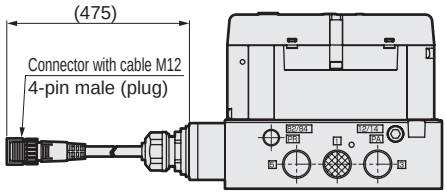

● With pilot air OFF function (M7)

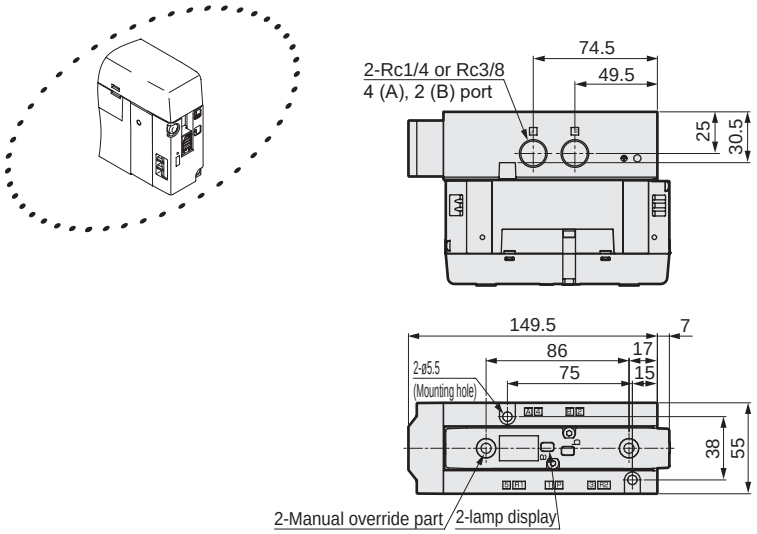

● External pilot (K)

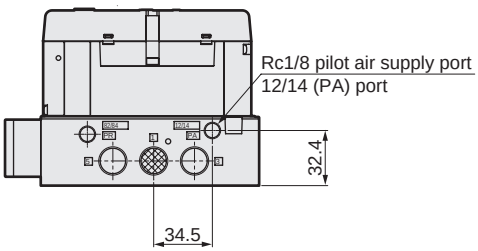



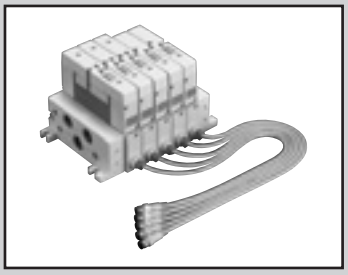

Individual wiring manifold
Base side piping/base bottom piping

MW4G$^{B}_{Z}$4-R1 Series

● Cylinder bore size: ø63 to ø125

CE Refer to the Ending for details. RoHS

Common specifications

Item	MW4GB4	MW4GZ4
Manifold	Block manifold	
Supply and exhaust method	Common supply/common exhaust	
Pilot exhaust method	Main valve/pilot valve individual exhaust	
Piping direction	Lateral direction from base	Downward from base
Valve and operation	Pilot operated soft spool valve	
Working fluid	Compressed air	
Max. working pressure MPa	1.0 (≈150 psi, 10 bar)	
Min. working pressure MPa	0.2 (≈29 psi, 2 bar) (*3)	
Proof pressure MPa	1.5 (≈220 psi, 15 bar)	
Ambient temperature °C	-5 (23°F) to 55 (131°F) (no freezing)	
Fluid temperature °C	5 (41°F) to 55 (131°F)	
Manual override	Non-locking (standard)	
Lubrication (*1)	Not required	
Degree of protection (*2)	Dust proof/jet proof (IP65)	
Vibration resistance m/s^2	49 or less	
Shock resistance m/s^2	294 or less	
Atmosphere	Cannot be used in corrosive gas environments	

*1 : Use turbine oil Class 1 ISO VG32 for lubrication.
Excessive lubrication results in unstable operation.
*2 : Tested according to the test method for IP65 (IEC60529 (IEC529: 1989-11)) standards.
Refer to page 1186 for details.
*3 : The working pressure range is 0 to 1.0 MPa when the external pilot (option code: K) is selected. Set the external pilot pressure between 0.2 and 1.0 MPa.

Electrical specifications

Item		MW4GB4/MW4GZ4
Rated voltage V	DC	12,24
Voltage fluctuation range		±10%
Holding current A	12 VDC	0.100
	24 VDC	0.050
Power consumption W (*4)	12 VDC	1.2
	24 VDC	1.2
Thermal class		B (molded coil)
Wiring method		I/O connector (for DC)

*4: Surge suppressor and indicator are supplied as standard.

JIS symbol

● 5-port valve

2-position single

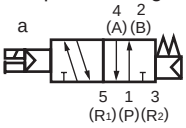

2-position double

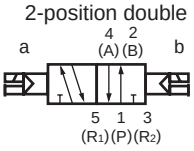

3-position all ports closed

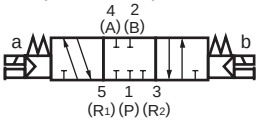

3-position A/B/R connection

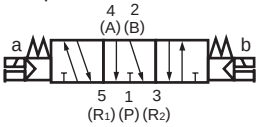

3-position P/A/B connection

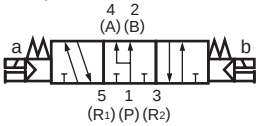

Individual specifications

Item		MW4GB4	MW4GZ4
Max. station No.		16	
Port size	P-port	Rc1/2, G1/2, NPT1/2	
	A/B port	Rc1/4, Rc3/8, G1/4, G 3/8, NPT 1/4, NPT 3/8, Push-in fitting ø8, ø10, ø12	Rc1/4, Rc3/8, G 1/4, NPT 1/4
	R-port	Rc1/2, G1/2, NPT1/2	
	PA/PR-port	Rc1/8, G1/8, NPT1/8	

For weight, refer to page 1126.

Performance/characteristics by model

Item			MW4GB4/MW4GZ4 ON	MW4GB4/MW4GZ4 OFF
Response time ms	2-position	Single	30	38
		Double	30	-
	3-position	ABR connection	50	58

The response time is the value with a supply pressure of 0.5 MPa at 20°C and with no lubrication. It depends on the pressure and the lubricant quality.

Flow characteristics

Model No.	Solenoid position		P→A/B C[dm^3/(s·bar)]	P→A/B b	A/B→R C[dm^3/(s·bar)]	A/B→R b
W4GB4	2-position		7.4	0.24	7.9	0.30
	3-position	All ports closed	6.4	0.22	7.1	0.32
		ABR connection	6.4	0.17	8.3	0.28
		PAB connection	7.1	0.16	7.4	0.28

*1: Effective cross-sectional area S and sonic conductance C are converted as S ≈ 5.0 x C.
*2: Values of flow characteristics are for Rc3/8 port size.

How to order

Individual wiring I/O connector

● Manifold model No.

MW4GB4 8 0 - 10 - R1 M - 6 - 3

MW4GZ4 8 0 - 08 - R1 M - 6 - 3

● Discrete valve block with solenoid valve

NW4GB4 1 0 - 10 - R1 M7 — 3

NW4GZ4 1 0 - 08N - R1 M7 — 4

● Single valve for mounting base(*6)

W4GB4 1 9 - 00 — M — 3

Ⓐ Model No. Ⓑ Solenoid position

Ⓒ Port size

Ⓓ Electrical connections

Ⓔ Option

Ⓕ Station No.

Ⓖ Voltage

Code	Description	Ⓐ Model No. Manifold MW4GB4	Manifold MW4GZ4	Discrete valve block with solenoid valve NW4GB4	Discrete valve block with solenoid valve NW4GZ4	Single unit Valve W4GB4
Ⓑ Solenoid position						
1	2 position single	●	●	●	●	●
2	2-position double	●	●	●	●	●
3	3-position all ports closed	●	●	●	●	●
4	3-position ABR connection	●	●	●	●	●
5	3-position PAB connection	●	●	●	●	●
8	Mix manifold (when there are multiple solenoid positions)	●	●			
Ⓒ Port size [2(B), 4(A) port]						
08	Rc1/4	●	●	●	●	
10	Rc3/8	●	●	●	●	
08G	G1/4	●	●	●	●	
10G	G3/8	●		●		
08 N	NPT1/4	●	●	●	●	
10N	NPT3/8	●		●		
C8	ø8 push-in	●		●		
C10	ø10 push-in	●		●		
C12	ø12 push-in	●		●		
CX	Push-in fitting mix	●				
HX	Screw-in mix	●	●			
Ⓓ Electrical connections (lamp and surge suppressor provided as standard)						
R 1	I/O connector (500 mm)	●	●	●	●	
Ⓔ Option						
Blank	No option (*1) (Non-locking/locking model common manual override when M and M7 are not selected.)	●	●	●	●	●
M	Manual override of non-locking (standard)	●	●	●	●	●
M7	Lock with pilot air OFF function (*2)	●	●	●	●	●
Z1	Air supply spacer (*3)	●	●			
Z3	Exhaust spacer (*3)	●	●			
K	External pilot	●	●	(*4)	(*4)	(*4)
A	Coolant proof	●	●	●	●	●
F	Port A/B filter (*5)	●	●	●	●	
Ⓕ Station No.						
1 to 16	1 stations to 16 stations	●	●			
Ⓖ Voltage						
3	24 VDC	●	●	●	●	●
4	12 VDC	●	●	●	●	●

indicates not available.

⚠ Precautions for model selection

Be sure to fill in the "Manifold specifications sheet".

*1: Do not select M and M7 when selecting the manual override of non-locking/locking common.

*2: Includes both the manual override of non-locking and the lock with pilot air OFF function. The manual override of non-locking/locking common and the lock with pilot air OFF function cannot be selected together.

***3: Specify the spacer mounting position/ quantity in the manifold specifications sheet. Combination with the masking plate is not supported. Multiple stacked assemblies of spacers are available as made to order. For details on air supply spacer and exhaust spacer, refer to page 1156 .**

*4: Common for the internal and external pilots.

*5: A filter is built into port P as standard.

*6: As there is no body gasket attached, use the body gasket attached with the valve block.

Coolant proof specifications

Can be selected with “How to order” Item Ⓔoption “A” on page 1125.

Specifications for rechargeable battery (Catalog No. CC-1226A)

● For use in the rechargeable battery manufacturing process, materials used for all parts are limited

** - Voltage - P40

CE marking specifications

** - Voltage - ST

・Standard voltage of 24 VDC or less is CE marking-compatible even if the model No. is not indicated with "ST".

Manifold components explanation and parts list

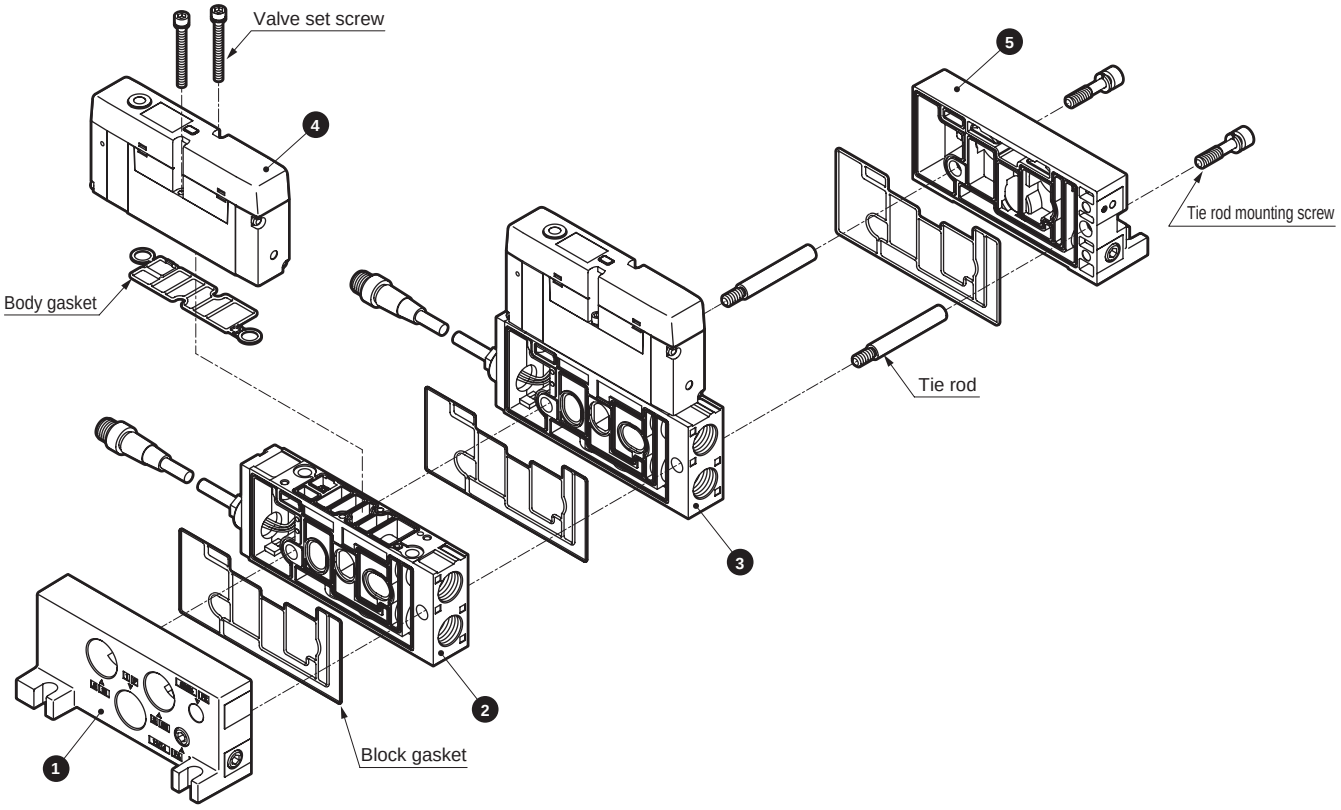

List of main components (refer to pages 1146 to 1156 for details)

No.	Component name	Model No. (example)	No.	Component name	Model No. (example)
1	End block L	NW4G4-EL	4	Discrete solenoid valve	W4GB419-00-M-3
2	Discrete valve block	NW4GB4-V-10-R1	5	End block R	NW4G4-ER
3	Discrete valve block with solenoid valve	NW4GB410-10-R1M-3			

Component weight (DC)

(g)

Components	Model No.	Weight	Components	Model No.	Weight
End block	NW4G4-EL	316	Exhaust spacer	W4G4-R-10	189
	NW4G4-ER	308	Tie rod (Set of 2)	W4G4-TR-V1 (For 1 station)	16
Discrete valve block with solenoid valve	NW4GB410-10-R1M-3	584		W4G4-TR-V2	36
	NW4GB420-10-R1M-3	629		W4G4-TR-V3	56
	NW4GB4$^{3}_{4}$$_{5}$0-10-R1M-3	661		W4G4-TR-V4	76
	NW4GZ410-08-R1M-3	617		W4G4-TR-V5	96
	NW4GZ420-08-R1M-3	662		W4G4-TR-V6	116
	NW4GZ4$^{3}_{4}$$_{5}$0-08-R1M-3	694		W4G4-TR-V7	136
Discrete valve block with masking plate	NW4GB4-MP-10-R1	415		W4G4-TR-V8 (For 8 stations)	156
	NW4GZ4-MP-08-R1	448	Tie rod mounting screw (2)		16
Partition block	NW4G4-SA	360	Valve block	NW4GB4-V-08-R1	347
Air supply spacer	W4G4-P-10	187		NW4GB4-V-10-R1	327
				NW4GB4-V-C*-R1	371
				NW4GZ4-V-08-R1	360

Parts list

Applicable	Part name	Model No.
Valve block	Cartridge fitting ø8 straight	4G4-JOINT-C8
	Cartridge fitting ø10 straight	4G4-JOINT-C10
	Cartridge fitting ø12 straight	4G4-JOINT-C12

Dimensions

MW4GB4 Side piping

● I/O connector (R1)

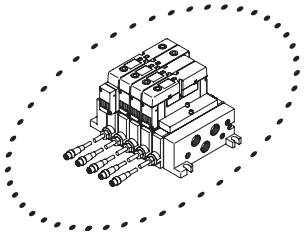

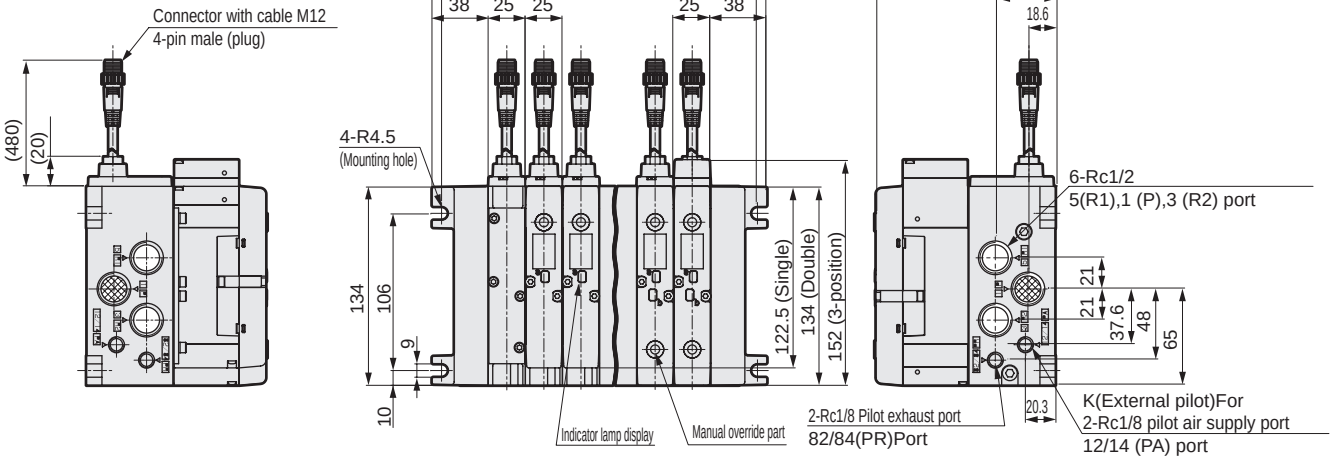

I/O connector pin array

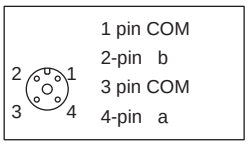

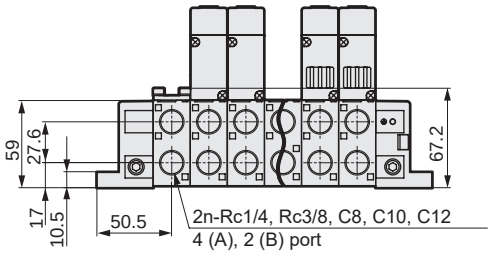

● Manual override of non-locking/locking common (blank)

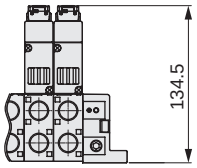

● Push-in fitting for valve block

● ø8(C8)

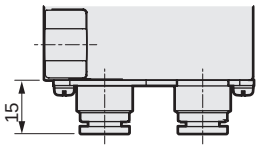

● ø10 (C10)

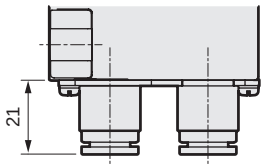

● ø12(C12)

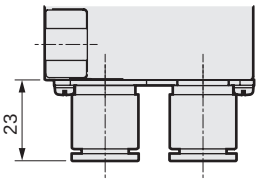

MW4GZ4 bottom piping

● I/O connector (R1)

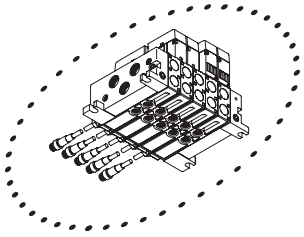

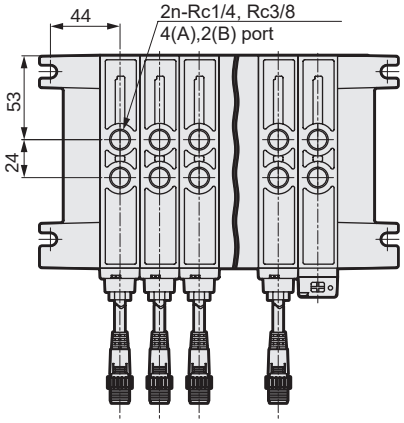

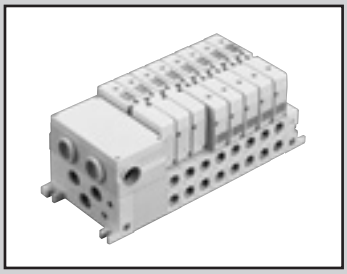

Reduced wiring manifold
Base side piping/base bottom piping

MW4GB/Z4-T1/3/7 Series

● Cylinder bore size: ø63 to ø125

CE (Applicable to: T10 (R) DC voltage T6D1 (R))

Refer to the Ending for details.

RoHS

Common specifications

Item	MW4GB4	MW4GZ4
Manifold	Block manifold	
Supply and exhaust method	Common supply/common exhaust	
Pilot exhaust method	Main valve/pilot valve individual exhaust	
Piping direction	Lateral direction from base	Downward from base
Valve and operation	Pilot operated soft spool valve	
Working fluid	Compressed air	
Max. working pressure MPa	1.0	
Min. working pressure MPa	0.2 (*3)	
Proof pressure MPa	1.5	
Ambient temperature °C	-5 to 55 (no freezing)	
Fluid temperature °C	5 to 55	
Manual override	Non-locking (standard)	
Lubrication (*1)	Not required	
Degree of protection (*2)	Dust proof/jet proof (IP65)	
Vibration resistance m/s^2	49 or less	
Shock resistance m/s^2	294 or less	
Atmosphere	Cannot be used in corrosive gas environments	

*1: Use turbine oil Class 1 ISO VG32 for lubrication. Excessive lubrication results in unstable operation.

*2: Tested according to the test method for IP65 (IEC60529 (IEC529: 1989-11)) standards. Refer to page 1186 for details.
The degree of protection of T30 (custom made) is dust proof. Avoid water drops or oil, etc., during use.

*3: The working pressure range is 0 to 1.0 MPa when the external pilot (option code: K) is selected. Set the external pilot pressure between 0.2 and 1.0 MPa.

Electrical specifications

Item			W4GB4/W4GZ4
Rated voltage V (*4)	AC		100(50/60 Hz) 110(50/60 Hz)
	DC		12,24
Voltage fluctuation range			±10%
Starting current A	AC	100 V	0.056/0.044
		110 V	0.051/0.040
	DC	12 V	-
		24 V	-
Holding current A	AC	100 V	0.028/0.022
		110 V	0.025/0.020
	DC	12 V	0.100
		24 V	0.050
Power consumption W (*5)	AC	100 V	1.8/1.5
		110 V	
	DC	12 V	1.2
		24 V	
Thermal class			B (molded coil)

*4: Serial transmission connection is 24 VDC only.

*5: Surge suppressor and indicator are supplied as standard.

JIS symbol

● 5-port valve

2-position single

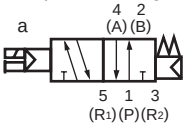

2-position double

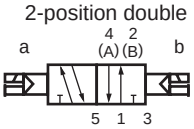

3-position all ports closed

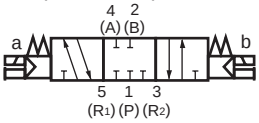

3-position A/B/R connection

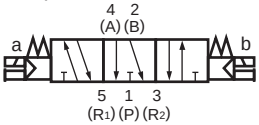

3-position P/A/B connection

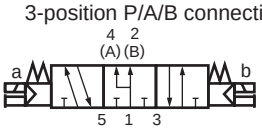

Individual specifications

Item		MW4GB4		MW4GZ4	
		T10(R) Common term. block	T7*** Serial transmission device	T10(R) Common term. block	T7*** Serial transmission device
Max. station No.	Standard wiring	16			
	Double wiring	8			
Max. number of solenoids		16			
Port size	P-port	Rc1/2, G1/2, NPT1/2			
	A/B port	Rc1/4, Rc3/8, G1/4, G 3/8, NPT 1/4, NPT 3/8, Push-in fitting ø8, ø10, ø12		Rc1/4, G 1/4 NPT1/4, Rc3/8	
	R-port	Rc1/2, G1/2, NPT1/2			
	PA/PR-port	Rc1/8, G1/8, NPT1/8			

For weight, refer to page 1135.

Performance/characteristics by model

Item			MW4GB4/MW4GZ4 ON	MW4GB4/MW4GZ4 OFF
Response time ms	2-position	Single	30	38
		Double	30	-
	3-position	ABR connection	50	58

The response time is the value with a supply pressure of 0.5 MPa at 20°C and with no lubrication. It depends on the pressure and the lubricant quality.

Flow characteristics

Model No.	Solenoid position		P→A/B C[dm^3/(s·bar)]	P→A/B b	A/B→R C[dm^3/(s·bar)]	A/B→R b
W4GB4	2-position		7.4	0.24	7.9	0.30
	3-position	All ports closed	6.4	0.22	7.1	0.32
		ABR connection	6.4	0.17	8.3	0.28
		PAB connection	7.1	0.16	7.4	0.28

*1: Effective cross-sectional area S and sonic conductance C are converted as S ≈ 5.0 x C.

*2: Values of flow characteristics are for Rc3/8 port size.

Reduced wiring specifications

Item	T10	T30
Type	Common terminal block M3 thread	D-sub-connector
Connector	-	D-sub-connector 25-pin

Specifications of serial transmission device (adapter) stations (refer to page 1167 for PLC compatibility table)

The communication setting file can be downloaded from the CKD website (https://www.ckd.co.jp/en/).

Item		Slave unit dedicated for valves (without I/O block)		Slave unit with I/O block	
		T7EC1	T7ECP1	T7ECB7	T7ECPB7
Network name		EtherCAT		EtherCAT	
Pwr. sply. voltage	Unit side	24 VDC ±10%		24 VDC ±10%	
	Valve side	24 VDC +10%, -5%		24 VDC +10%, -5%	
Current	Unit side	110 mA or less		110 mA or less (excluding input block current)	
	Valve side	15 mA or less (excluding load current)		15 mA or less (excluding load current)	
Valve output		NPN	PNP	NPN	PNP
Input/output point count		0/16		16/16	
Operation display		Power supply/communication status/valve power supply			
Degree of protection		IP65			

*1: Compatible with DeviceNet compliant networks (DLNK, etc.) as well.

Item		Slave unit dedicated for valves (without I/O block)		Slave unit with I/O block	
		T7EN1	T7ENP1	T7ENB7	T7ENPB7
Network name		EtherNet/IP			
Pwr. sply. voltage	Unit side	24 VDC ±10%			
	Valve side	24 VDC +10%, -5%			
Current	Unit side	130 mA or less		130 mA or less (excluding input block current)	
	Valve side	15 mA or less (excluding load current)			
Valve output		NPN output	PNP output	NPN output	PNP output
I/O points		16-point output	16-point output	16-point input/16-point output	16-point input/16-point output
LED display	Power supply	2 points: Unit power supply/valve power supply			
	Communication	4 points: MS, NS, L/A IN, L/A OUT			
Degree of protection		IP65			

Item		Slave unit dedicated for valves (without I/O block)		Slave unit with I/O block	
		T7EB1	T7EBP1	T7EBB7	T7EBPB7
Network name		CC-Link IEF Basic			
Pwr. sply. voltage	Unit side	24 VDC ±10%			
	Valve side	24 VDC +10%, -5%			
Current	Unit side	130 mA or less		130 mA or less (excluding input block current)	
	Valve side	15 mA or less (excluding load current)			
Valve output		NPN output	PNP output	NPN output	PNP output
I/O points		16-point output	16-point output	16-point input/16-point output	16-point input/16-point output
LED display	Power supply	2 positions: PW, PW (V)			
	Communication	4 positions: RUN, ERR, L/A IN, L/A OUT, INFO			
Degree of protection		IP65			

Item		Slave unit dedicated for valves (without I/O block)		Slave unit with I/O block	
		T7EP1	T7EPP1	T7EPB7	T7EPPB7
Network name		PROFINET			
Pwr. sply. voltage	Unit side	24 VDC ±10%			
	Valve side	24 VDC +10%, -5%			
Current	Unit side	130 mA or less		130 mA or less (excluding input block current)	
	Valve side	15 mA or less (excluding load current)			
Valve output		NPN output	PNP output	NPN output	PNP output
I/O points		16-point output	16-point output	16-point input/16-point output	16-point input/16-point output
LED display	Power supply	2 positions: PW, PW (V)			
	Communication	4 positions: RUN, ERR, L/A IN, L/A OUT, INFO			
Degree of protection		IP65			

I/O block specifications

● Input block

Model No. / Item	NW4GB2-IN-N-K	NW4GB2-IN-N-B	NW4GB2 -IN-P-K	NW4GB2-IN-P-B
No. of inputs	4 points			
Rated input voltage	24 VDC			
Rated input current	7mA			
ON voltage	15 VDC or more (between input terminals and V)		15 VDC or more (between input terminals and G)	
OFF voltage/OFF current	5 VDC or less (between input terminal and V)/1.5 mA or less		5 VDC or less (between input terminal and G)/1.5 mA or less	
Input	Sink		Source type	
Power supply	Common with unit power supply	Externally supplied power	Common with unit power supply	Externally supplied power
Operation display	Power supply/input status			

***1: Refer to page 1154 for model No.**

● Output block

Model No. / Item	NW4GB2-OUT-N-B	NW4GB2-OUT-P-B
No. of output points	4 points	
Rated voltage	24 VDC	
Max. load current	1A/1 point (3A/common)	
Residual voltage	1.5 V or less	
Output	Sink	Source type
Protection circuit	Overcurrent protection/reverse connection protection	
Fuse	Power supply for external load: 24 VDC, 5A (can be replaced)	
Operation display	Power supply/output status	

***1: Refer to page 1154 for model No.**

Coolant proof specifications

Can be selected with “How to order” Items Ⓖ and Ⓕ option “A” on pages 1131 and 1132.

CE marking specifications

Applicable to: T10(R) DC voltage

** - Voltage - **ST**

- Standard voltage of 24 VDC or less is CE marking-compatible even if the model No. is not indicated with "ST".

Specifications for rechargeable battery

(Catalog No. CC-1226A)

● For use in the rechargeable battery manufacturing process, materials used for all parts are limited

** - Voltage - **P40**

How to order

● Manifold model No.

MW4GB4 8 0 - 10 — T10 W M - 6 - 3

MW4GZ4 8 0 - 08 — T10R W M - 6 - 3

● Discrete valve block with solenoid valve

NW4GB4 1 0 - 10 - 1 M7 — 1

NW4GZ4 1 0 - 08N - 1 M7 — 4

● Discrete valve for integrated base (*9)

W4GB4 1 9 - 00 — M — 3

Ⓐ Model No. Ⓑ Solenoid position

Ⓒ Port size

Ⓓ Electrical connections

Ⓔ Wiring method

Ⓕ Terminal/connector pin array

Ⓖ Option

Ⓗ Station No.

Ⓘ Voltage

Ⓐ Model No.	Manifold		Discrete valve block with solenoid valve		Single solenoid valve
	MW4GB4	MW4GZ4	NW4GB4	NW4GZ4	W4GB4
Ⓑ Solenoid position					
1 — 2 position single	●	●	●	●	●
2 — 2-position double	●	●	●	●	●
3 — 3-position all ports closed	●	●	●	●	●
4 — 3-position ABR connection	●	●	●	●	●
5 — 3-position PAB connection	●	●	●	●	●
8 — Mix manifold (when there are multiple solenoid positions)	●	●			
Ⓒ Port size [2(B), 4(A) port]					
08 — Rc1/4	●	●	●	●	
10 — Rc3/8	●	●	●	●	
08G — G1/4	●	●	●	●	
10G — G3/8	●		●		
08 N — NPT1/4	●	●	●	●	
10N — NPT3/8	●		●		
C8 — ø8 push-in	●		●		
C10 — ø10 push-in	●		●		
C12 — ø12 push-in	●		●		
CX — Push-in fitting mix	●				
HX — Screw-in mix	●	●			
Ⓓ Electrical connections					
Blank — Reduced wiring DC specifications			●	●	
1 — Common terminal block AC specs. for 1 to 6 stations			●	●	
2 — Common terminal block AC specs. for 7 to 12 stations			●	●	
3 — Common terminal block AC specs. for 13 to 16 stations			●	●	
Ⓔ Reduced wiring method (including standard lamp and surge suppressor)					
Blank — Discrete			●	●	●
T10 — Common terminal block D-sub-connector (*1) — Left specs.	●	●			
T10R — Common terminal block D-sub-connector (*1) — Right-sided specs.	●	●			
T30 — Common terminal block D-sub-connector (*1) — Left specs.	●	●			
T30R — Common terminal block D-sub-connector (*1) — Right-sided specs.	●	●			
Ⓕ Terminal/connector pin array					
Blank — Standard wiring (*2)	●	●	●	●	●
W — Double wiring (*2)	●	●	●	●	
Ⓖ Option					
Blank — No option (Non-locking/locking model common manual override when M and M7 are not selected.) (*3)	●	●	●	●	●
M — Manual override of non-locking (standard)	●	●	●	●	●
M7 — Lock with pilot air OFF function (*4)	●	●	●	●	●
Z1 — Air supply spacer (*5)	●	●			
Z3 — Exhaust spacer (*5)	●	●			
Z7 — Spacer regulator (*1)(*5)	●	●			
K — External pilot	●	●	(*6)	(*6)	(*6)
A — Coolant proof	●	●	●	●	●
F — Port A/B filter (*7)	●	●	●	●	
Ⓗ Station No.					
1 to 16 — One station to 16 stations	● (*8)	● (*8)			
Ⓘ Voltage					
1 — 100 VAC	●	●	●	●	●
3 — 24 VDC	●	●	●	●	●
4 — 12 VDC	●	●	●	●	●
5 — 110 VAC	●	●	●	●	●

indicates not available.

⚠ Precautions for model selection

*1 : Custom made. Consult with CKD.
*2 : Standard wiring...The wiring will be based on the type of valve used.
Double wiring...All wired for double solenoid valves regardless of the type of valve used.
*3 : Do not select M and M7 when selecting the non-locking/locking common manual override.
*4 : Includes both the non-locking manual override and the lock with pilot air OFF function. The non-locking/locking common manual override and the lock with pilot air OFF function cannot be selected at the same time.
*5 : Specify the spacer mounting position and quantity in manifold specifications sheet. Combination with the masking plate is not supported.
Multiple stacked assemblies of spacers are available as custom order. For details on air supply spacer and exhaust spacer, refer to page 1156.
*6 : Common for the internal and external pilot.
*7 : A filter is built into the P-port as standard.
*8 : The max. station No. of manifold is 16 for standard wiring and 8 for double wiring.
*9 : As there is no body gasket included, use the body gasket attached with the valve block.

MW4G$^{B}_{Z}$4-T7 Series

Reduced wiring manifold; base side piping/base bottom piping

How to order

● Manifold model No.

MW4GB4 8 0 - 10 - T7G1 W M - 6 - 3

MW4GZ4 8 0 - 08 - T7D1R W M - 6 - 3

● Discrete valve block with solenoid valve

NW4GB4 1 0 - 10 — M7 — 3

NW4GZ4 1 0 - 08N — M7 — 3

● Discrete valve for integrated base (*12)

W4GB4 1 9 - 00 — M — 3

Ⓐ Model No. Ⓑ Solenoid position Ⓒ Port size Ⓓ Wiring method Ⓔ Terminal/connector pin array Ⓕ Option Ⓖ Station No. Ⓗ Voltage

Code	Description	Ⓐ Model No. Manifold MW4GB4	Ⓐ Model No. Manifold MW4GZ4	Ⓐ Model No. Discrete valve block with solenoid valve NW4GB4	Ⓐ Model No. Discrete valve block with solenoid valve NW4GZ4	Ⓐ Model No. Single unit Valve W4GB4
Ⓑ Solenoid position						
1	2 position single	●	●	●	●	●
2	2-position double	●	●	●	●	●
3	3-position all ports closed	●	●	●	●	●
4	3-position ABR connection	●	●	●	●	●
5	3-position PAB connection	●	●	●	●	●
8	Mix manifold (when there are multiple solenoid positions)	●	●			
Ⓒ Port size [2(B), 4(A) port]						
08	Rc1/4	●	●	●	●	
10	Rc3/8	●	●	●	●	
08G	G1/4	●	●	●	●	
10G	G3/8	●		●		
08N	NPT1/4	●	●	●	●	
10N	NPT3/8	●		●		
C8	ø8 push-in	●		●		
C10	ø10 push-in	●		●		
C12	ø12 push-in	●		●		
CX	Push-in fitting mix	●				
HX	Screw-in mix	●	●			
Ⓓ Wiring method (including standard lamp and surge suppressor)						
Refer to the next page for reduced wiring.						
Ⓔ Terminal/connector pin array						
Blank	Standard wiring (*1)	●	●	●	●	●
W	Double wiring (*1)	●	●	●	●	
Ⓕ Option						
Blank	No option (Non-locking/locking model common manual override when M and M7 are not selected.) (*2)	●	●	●	●	●
M	Manual override of non-locking (standard)	●	●	●	●	●
M7	Lock with pilot air OFF function (*3)	●	●	●	●	●
Z1	Air supply spacer (*4)	●	●			
Z3	Exhaust spacer (*4)	●	●			
K	External pilot	●	●	(*5)	(*5)	(*5)
A	Coolant proof	●	●	●	●	●
F	Port A/B filter (*6)	●	●	●	●	
Y**	I/O block (*9) (*10) (In **, enter the number of the desired I/O block combination from Table 1 [I/O block combination table].)					
Ⓖ Station No.						
1 to 16	One station to 16 stations	● (*7)	● (*7)			
Ⓗ Voltage						
3	24 VDC (*8)	●	●	●	●	●

indicates not available.

⚠ Precautions for model selection

*1 : Standard wiring: The wiring will be based on the type of valve used.
Double wiring: All wired for double solenoid valves regardless of the type of valve used.

*2 : Do not select M or M7 when selecting the non-locking/locking common manual override.

*3 : Includes both the non-locking manual override and the lock with pilot air OFF function. The manual override of non-locking/locking common and the lock with pilot air OFF function cannot be selected together.

*4 : Specify the spacer mounting position/quantity on the manifold specifications sheet. Combination with the masking plate is not supported.
Multiple stacked assemblies of spacers are available as made to order. For details on the air supply spacer and exhaust spacer, refer to page 1156.

*5 : Common for internal and external pilots.

*6 : A filter is built into port P as standard.

*7 : The max. station No. of manifold is 16 for standard wiring and 8 for double wiring.

*8 : Serial transmission connection is 24 VDC only.

9 : Refer to T7 on page 1170 for I/O block combinations.

*10 : Refer to page 991 for I/O block specifications.

*11 : As there is no body gasket included, use the body gasket attached with the valve block.

[Reduced wiring list]

Code	Description	Ⓐ Model No. Manifold MW4GB4	Manifold MW4GZ4	Discrete valve block with solenoid valve NW4GB4	Discrete valve block with solenoid valve NW4GZ4	Single solenoid valve W4GB4
Ⓓ Wiring method (including standard lamp and surge suppressor)						
Blank	Discrete			●	●	●
T7EC1	Thin EtherCAT 16 point output(NPN valve output)	●	●			
T7ECP1	Thin EtherCAT 16-point output (PNP valve output)	●	●			
T7ECB7	Thin (with I/O) type EtherCAT 16/16 points I/O(NPN valve output)	●	●			
T7ECPB7	Thin (with I/O) type EtherCAT 16/16 points I/O(PNP valve output)	●	●			
T7EN1	Thin EtherNet/IP 16-point output (NPN valve output)	●	●			
T7ENP1	Thin EtherNet/IP 16-point output (PNP valve output)	●	●			
T7ENB7	Thin EtherNet/IP 16/16 points I/O (NPN valve output)	●	●			
T7ENBP7	Thin EtherNet/IP 16/16 points I/O (PNP valve output)	●	●			
T7EB1	Thin CC-Link IEF Basic 16-point output (NPN valve output)	●	●			
T7EBP1	Thin CC-Link IEF Basic 16-point output (PNP valve output)	●	●			
T7EBB7	Thin CC-Link IEF Basic 16/16 points I/O (NPN valve output)	●	●			
T7EBPB7	Thin CC-Link IEF Basic 16/16 points I/O (PNP valve output)	●	●			
T7EP1	Thin PROFINET 16-point output (NPN valve output)	●	●			
T7EPP1	Thin PROFINET 16-point output (PNP valve output)	●	●			
T7EPB7	Thin PROFINET 16/16 points I/O (NPN valve output)	●	●			
T7EPPB7	Thin PROFINET 16/16 points I/O (PNP valve output)	●	●			

Coolant proof specifications

Can be selected with “How to order” Items Ⓖ and Ⓕ option “A” on pages 1131 and 1132.

Specifications for rechargeable battery

(Catalog No. CC-1226A)

● For use in the rechargeable battery manufacturing process, materials used for all parts are limited

* * - Voltage - **P40**

(compatible only with T6*)

CE marking specifications

* * - Voltage - **ST**

- Standard voltage of 24 VDC or less is CE marking-compatible even if the model No. is not indicated with "ST".
- T6G1 and T6G1R are not CE marking.

Table 1 [I/O block combination table]

T7

Code	Layout of I/O blocks and station No.						Wiring block side
Y10						IN	
Y20					IN	IN	
Y30				IN	IN	IN	
Y40			IN	IN	IN	IN	
Y11					OUT	IN	
Y21				OUT	IN	IN	
Y31			OUT	IN	IN	IN	
Y41		OUT	IN	IN	IN	IN	
Y12				OUT	OUT	IN	
Y22			OUT	OUT	IN	IN	
Y32		OUT	OUT	IN	IN	IN	
Y42	OUT	OUT	IN	IN	IN	IN	

*1: How to look at the table
Example) Y11 is a combination of one input block (4 points) and one output block (4 points).

2: Refer to “I/O point numbers corresponding to I/O No. of wiring method T8” on page 1081 for details.

Manifold components explanation and parts list

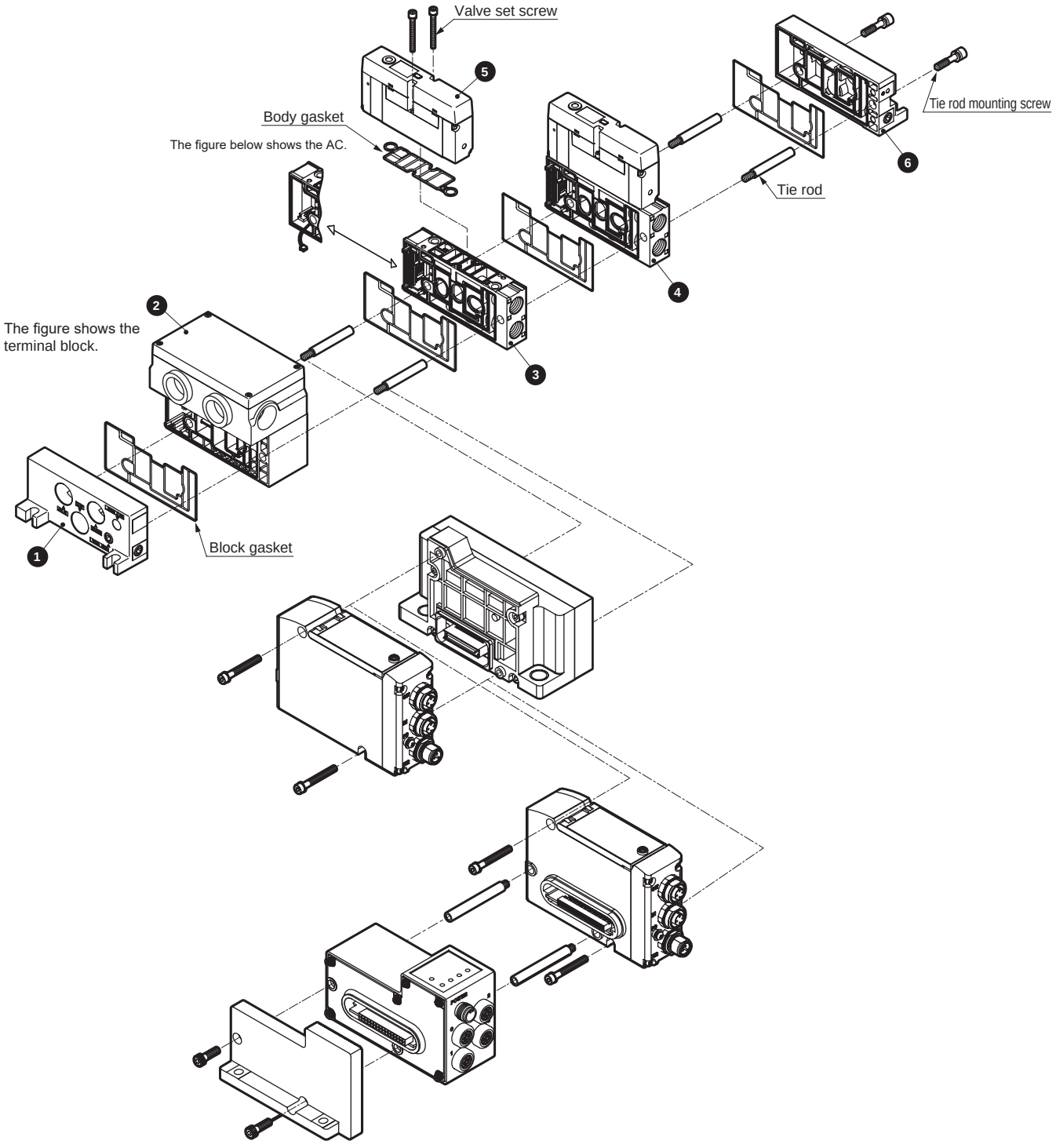

List of main components (refer to pages 1146 to 1156 for details)

No.	Component name	Model No. (example)	No.	Component name	Model No. (example)
1	End block L	NW4G4-EL	4	Discrete valve block with solenoid valve	NW4GB410-10-M-3
2	Wiring block	NW4G4-T10	5	Discrete solenoid valve	W4GB419-00-M-3
3	Discrete valve block	NW4GB4-V1-10	6	End block R	NW4G4-ER

Component weight (DC)

Part name	Model No.	Weight
End block	NW4G4-EL	316
	NW4G4-ER	308
Valve block with solenoid valve	NW4GB410-10-M-3	584
	NW4GB420-10-M-3	629
	NW4GB4[3/4/5]0-10-M-3	661
	NW4GZ410-10-M-3	617
	NW4GZ420-10-M-3	662
	NW4GZ4[3/4/5]0-10-M-3	694
Valve block with masking plate	NW4GB4-MPD-101	415
	NW4GZ4-MPD-08	448
Wiring block	NW4G4-T10	550
	NW4G4-T30	905
	NW4G4-T7EC*	750

Part name	Model No.	Weight
Partition block	NW4G4-SA	360
Air supply spacer	W4G4-P-10	187
Exhaust spacer	W4G4-R-10	189
Tie rod (Set of 2)	W4G4-TR-V1 (For 1 station)	16
	W4G4-TR-V2	36
	W4G4-TR-V3	56
	W4G4-TR-V4	76
	W4G4-TR-V5	96
	W4G4-TR-V6	116
	W4G4-TR-V7	136
	W4G4-TR-V8 (For 8 stations)	156
Tie rod mounting screw (2)	-	16
Valve block	NW4GB4-V2-08	291
	NW4GB4-V2-10	271
	NW4GB4-V2-C*	315
	NW4GZ4-V2-08	258

Related parts list

Applicable	Part name	Model No.
Valve Block	Cartridge fitting ø8 straight	4G4-JOINT-C8
	Cartridge fitting ø10 straight	4G4-JOINT-C10
	Cartridge fitting ø12 straight	4G4-JOINT-C12

Parts kit for T10 wiring block

● Cable clamp

Model No.	Applicable cable O.D.	Description
W4G-SCL-18A	ø14.5 to 16.5	Used to protect cables from dust and jetting water.
W4G-SCL-18B	ø16.5 to 18.5	

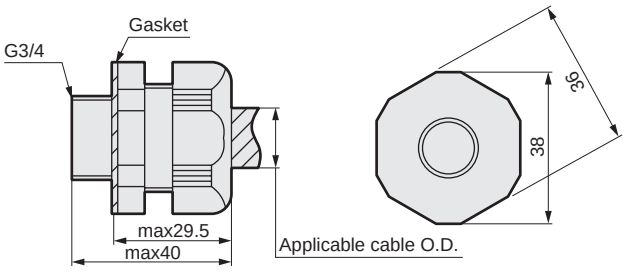

(Reference value)
Body tightening torque : 4.0 to 4.5 N·m
Cable clamp tightening torque: 3.0 to 3.5 N·m

Dimensions

MW4GB4 Side piping

● Common terminal block (T10) Left-sided specifications

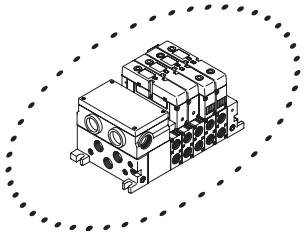

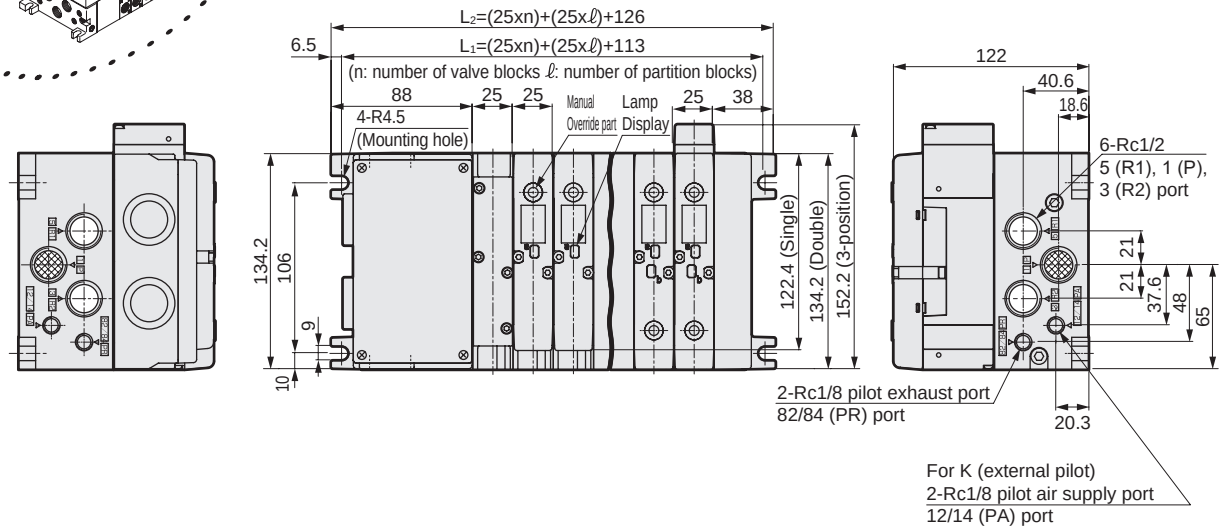

● Non-locking/locking common manual override (blank)

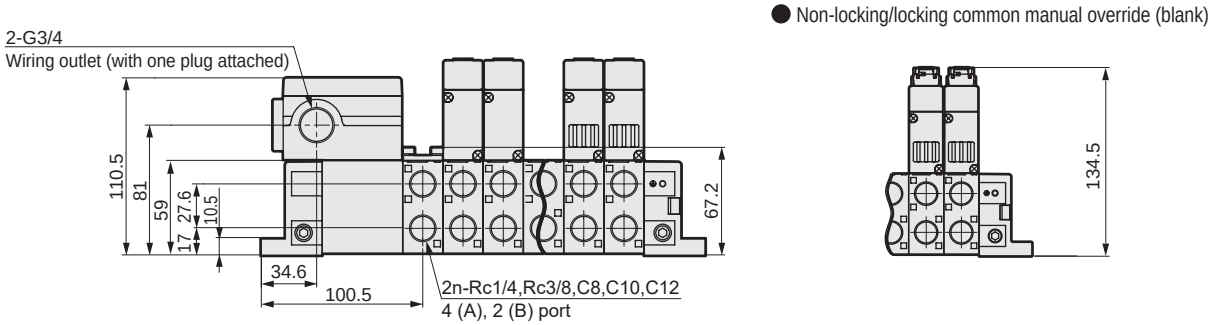

● Push-in fitting for valve block

● ø8(C8)

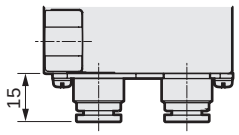

● ø10(C10)

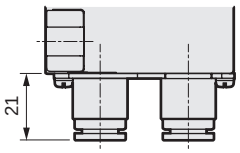

● ø12(C12)

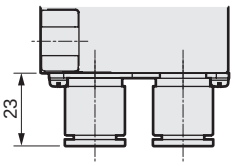

MW4GZ4 Rear piping

● Common terminal block (T10) Left-sided specifications

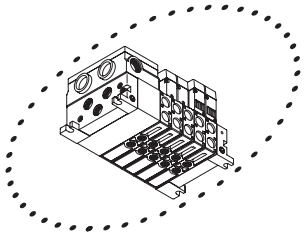

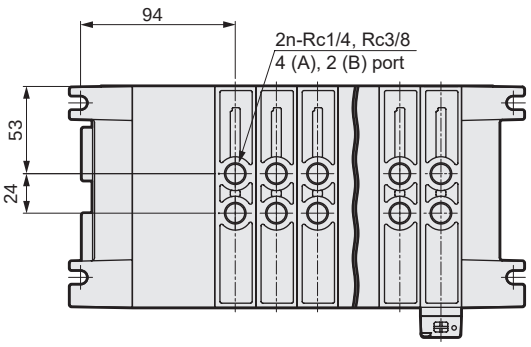

Dimensions

MW4GB4 Side piping

● Common terminal block (T10R) Right-sided specifications

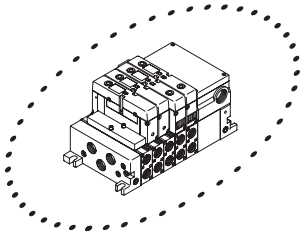

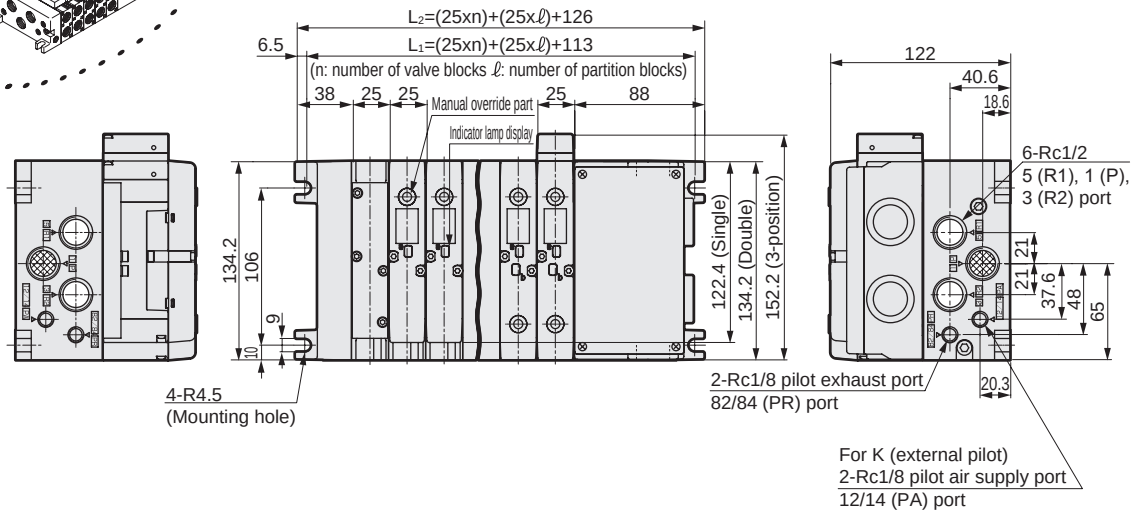

● Non-locking/locking common manual override (blank)

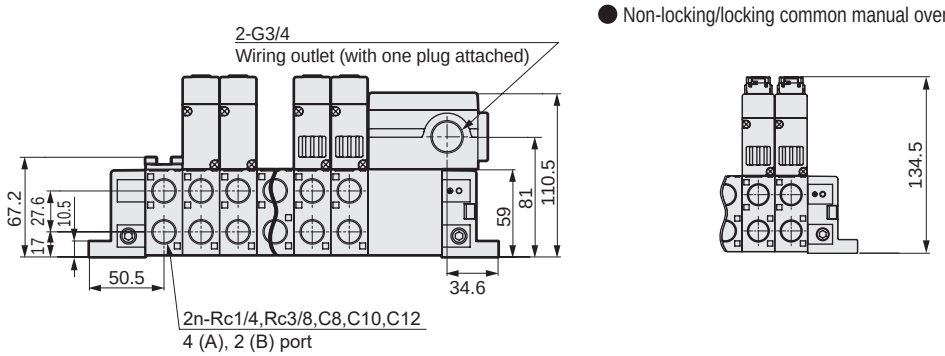

● Push-in fitting for valve block

● ø8(C8)

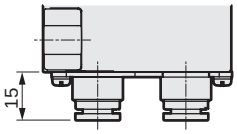

● ø10(C10)

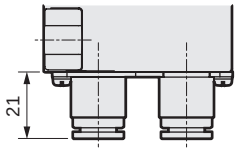

● ø12(C12)

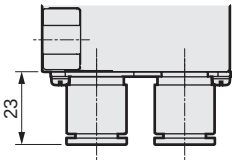

MW4GZ4 Rear piping

● Common terminal block (T10R) Right-sided specifications

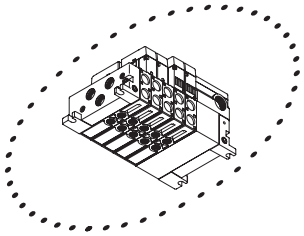

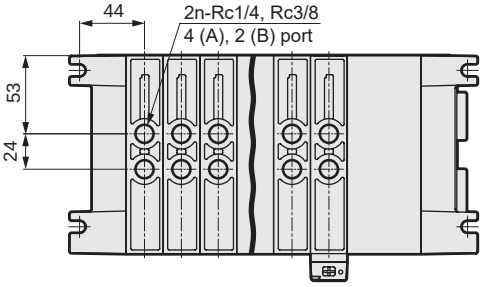

Dimensions

MW4GB4 Side piping (Custom made)

* Custom made. Consult with CKD.

● D-sub-connector (T30) Left-sided specifications

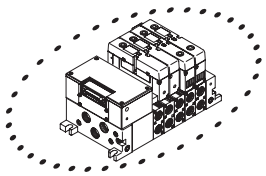



·Applied voltage: AC

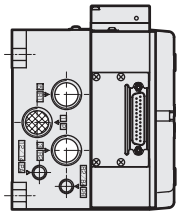

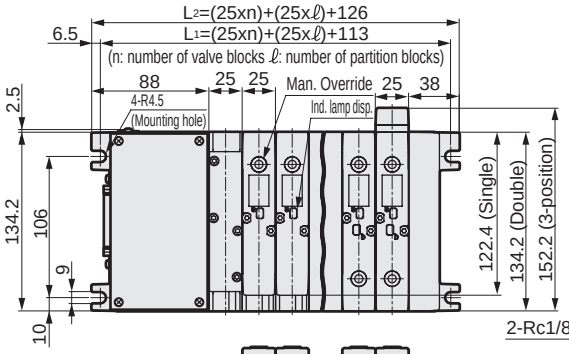

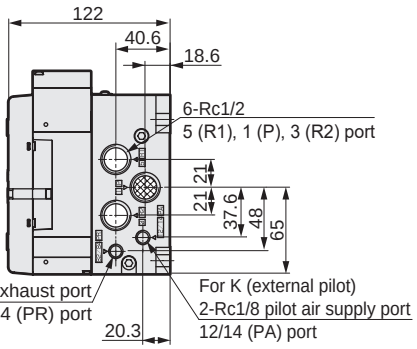

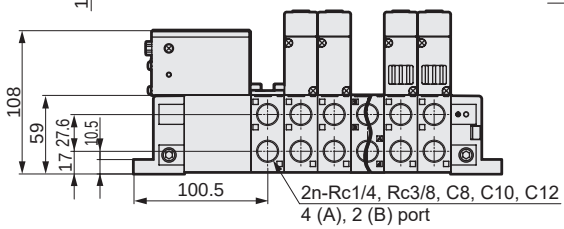

·Voltage: DC

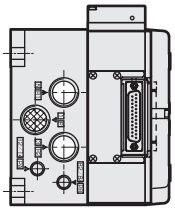

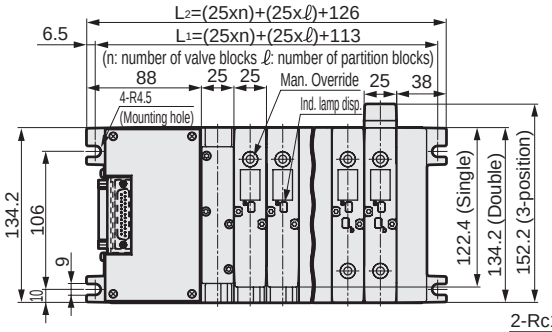

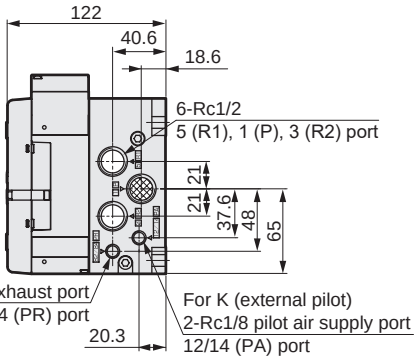

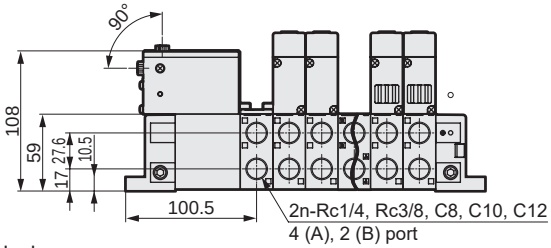

● Non-locking/locking common manual override (blank)

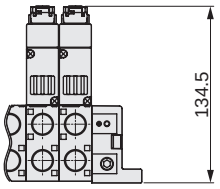

● Push-in fitting for valve block

·ø8 (C8)

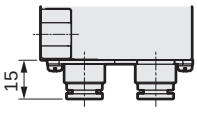

·ø10 (C10)

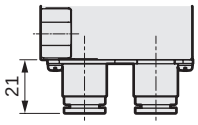

·ø12 (C12)

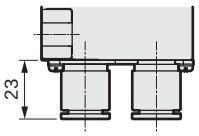

MW4GZ4 Rear piping

● D-sub-connector (T30)Left-sided specifications (custom order)

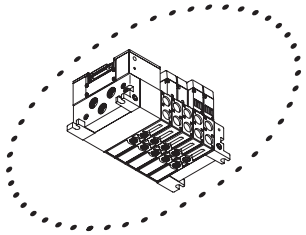

·Applied voltage: AC

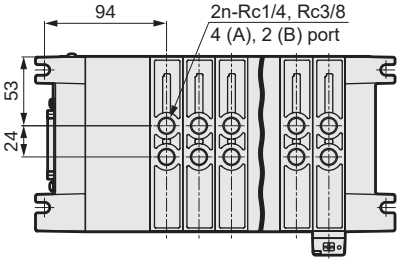

·Voltage: DC

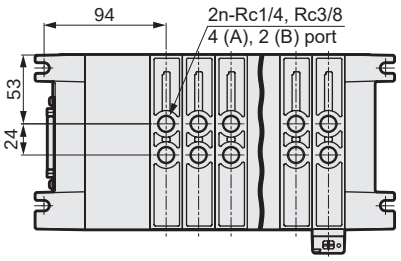

Dimensions

MW4GB4 Side piping

● D-sub-connector (T30R) Right-sided specifications (Custom made)

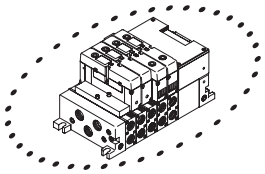

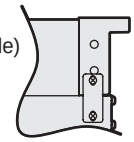

* Custom made. Consult with CKD.

·Applied voltage: AC

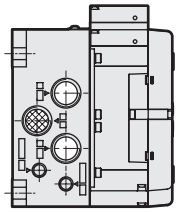

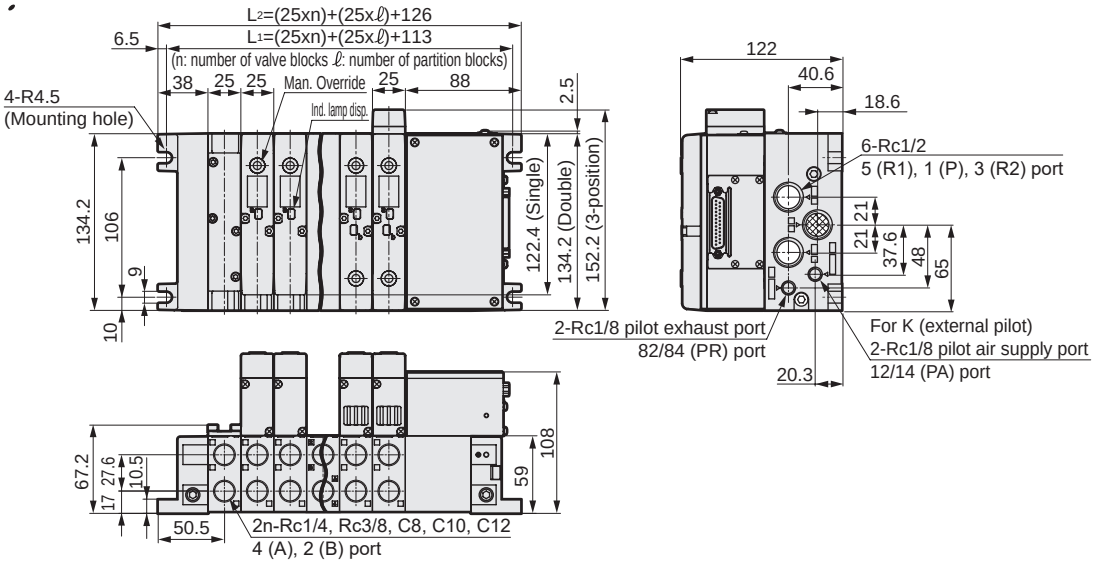

·Voltage: DC

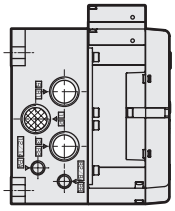

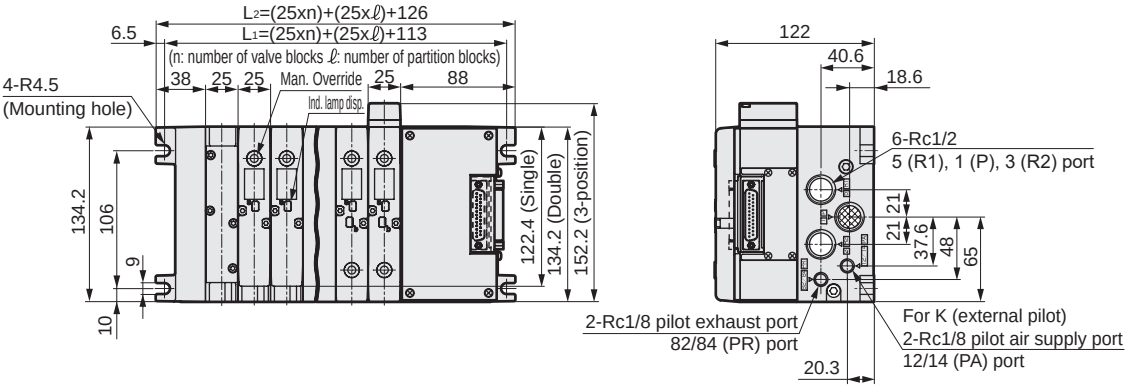

● Non-locking/locking common manual override (blank)

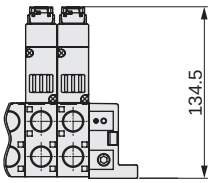

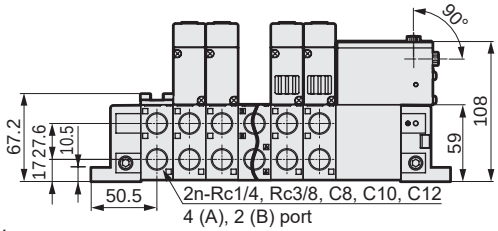

● Push-in fitting for valve block

·ø8 (C8)

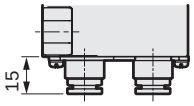

·ø10 (C10)

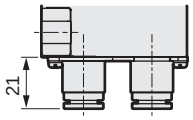

·ø12 (C12)

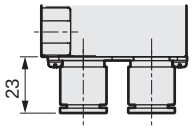

MW4GZ4 Rear piping

● D-sub-connector (T30R) Right-sided specifications (custom order)

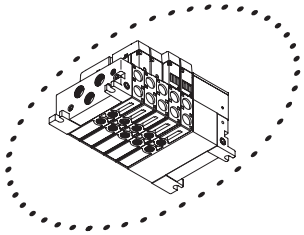

·Applied voltage: AC

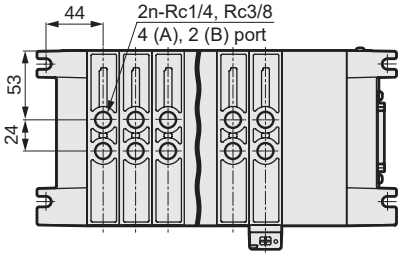

·Voltage: DC

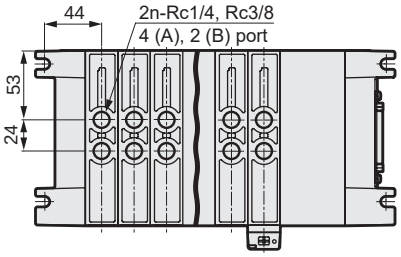

Dimensions

MW4GB4 Side piping

● Serial transmission (T6*1) Left-sided spec.

End of production product

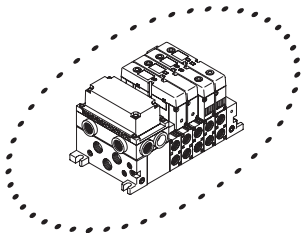

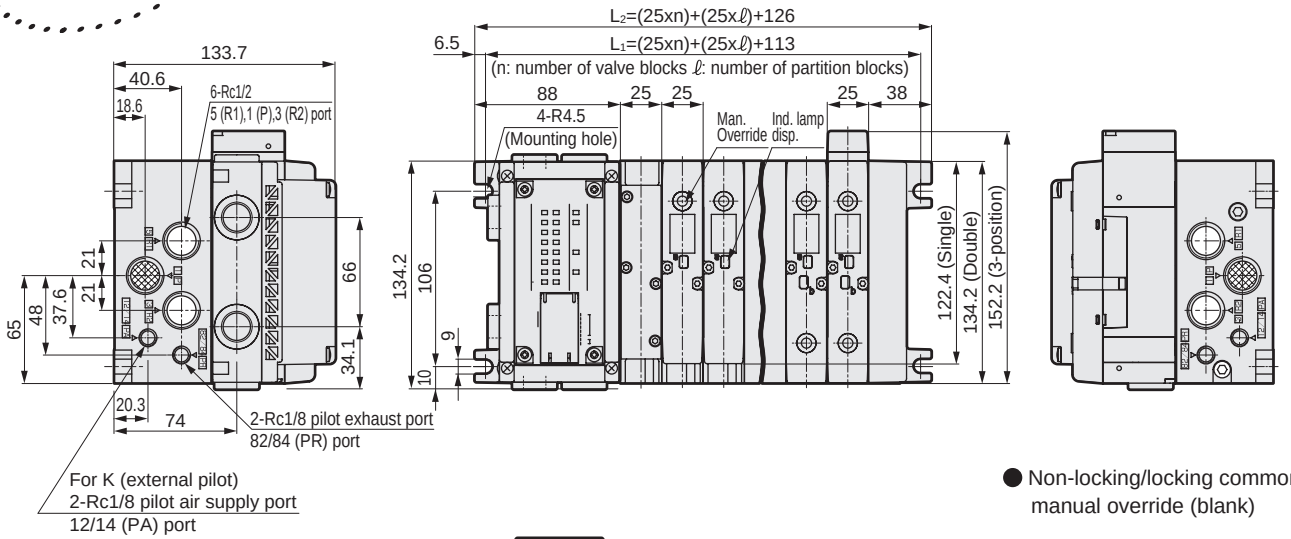

● Non-locking/locking common manual override (blank)

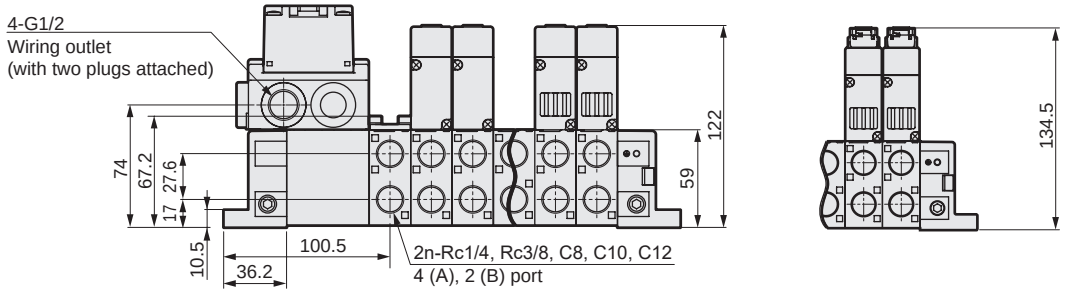

● Push-in fitting for valve block

● ø8(C8)

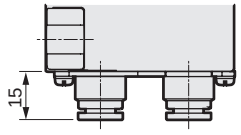

● ø10 (C10)

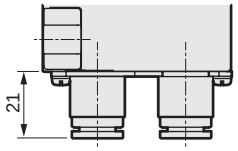

● ø12 (C12)

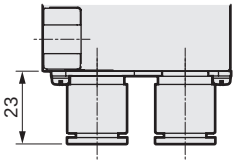

MW4GZ4 Rear piping

● Serial transmission (T6*1) Left-sided spec.

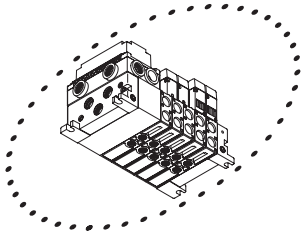

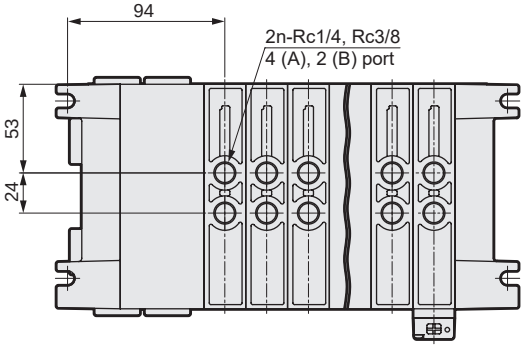

Dimensions

MW4GB4 Side piping

● Serial transmission (T6*1R) Right-sided spec.

End of production product

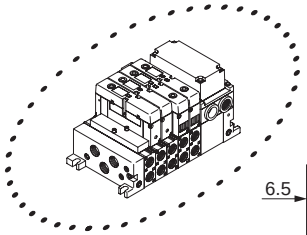

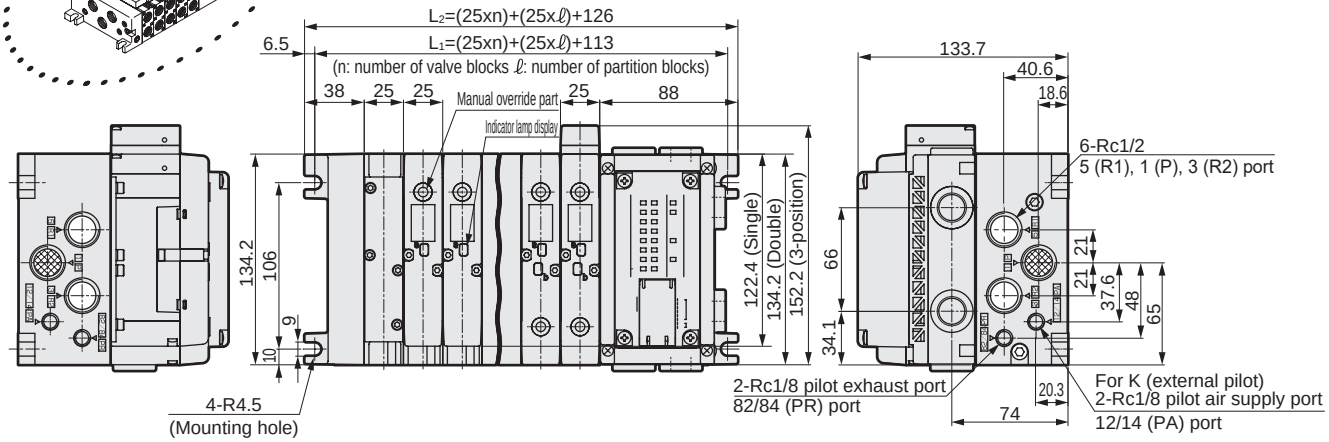

● Non-locking/locking common manual override (blank)

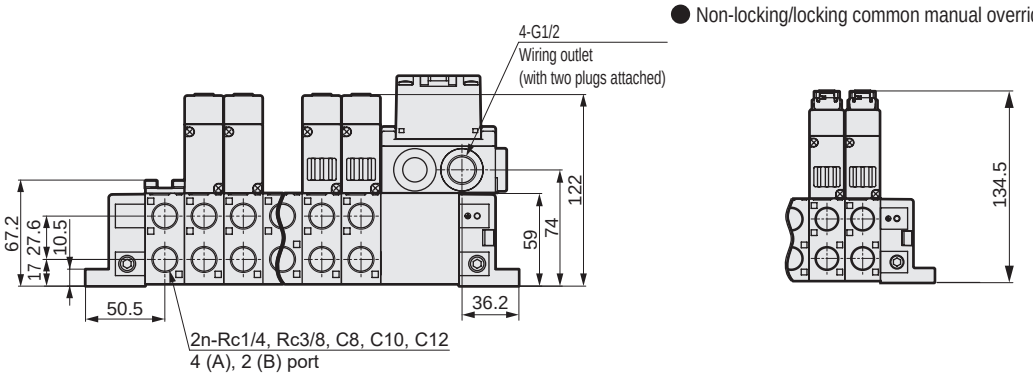

● Push-in fitting for valve block

● ø8(C8)

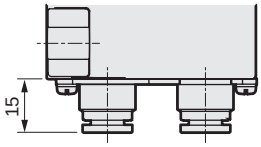

● ø10(C10)

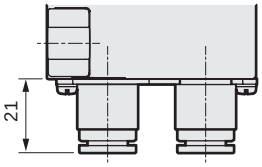

● ø12(C12)

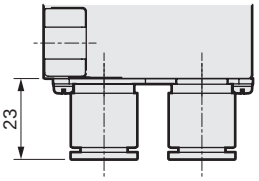

MW4GZ4 Rear piping

● Serial transmission (T6*1R) Right-sided spec.

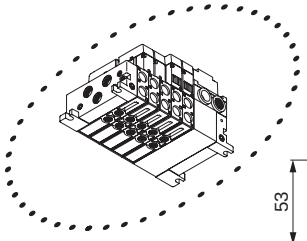

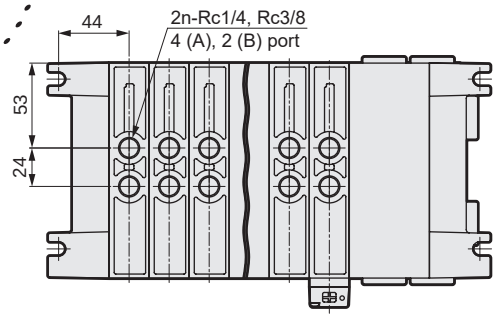

Dimensions

MW4GB4 Side piping

● Serial transmission (T7*) Left-sided spec.

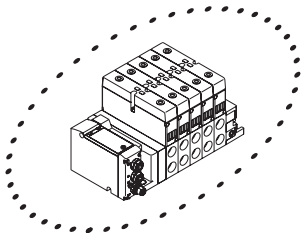

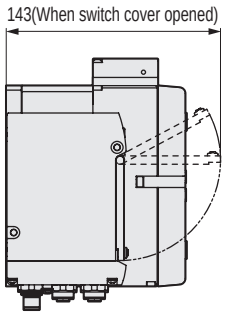

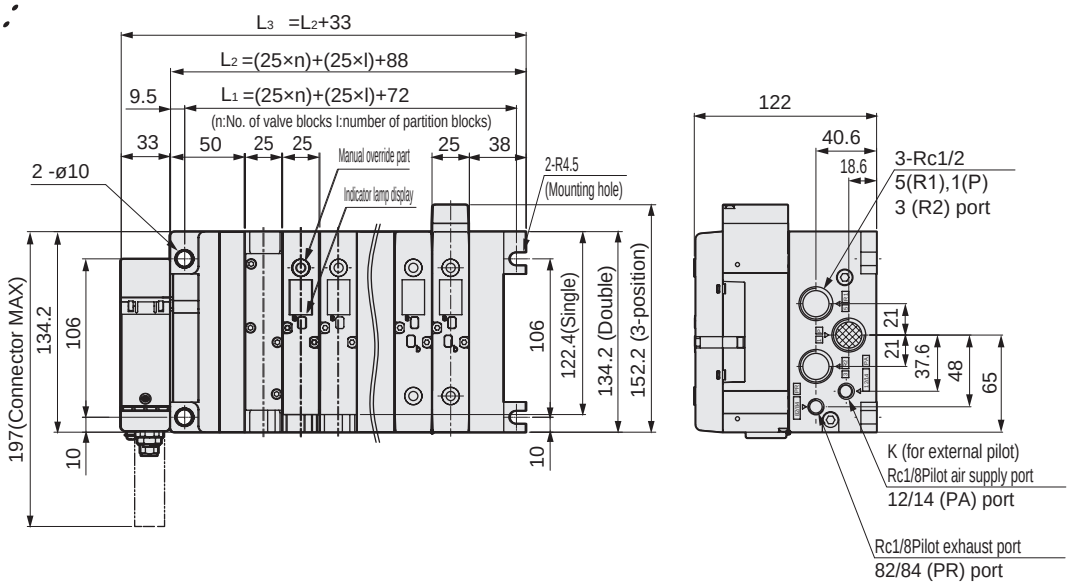

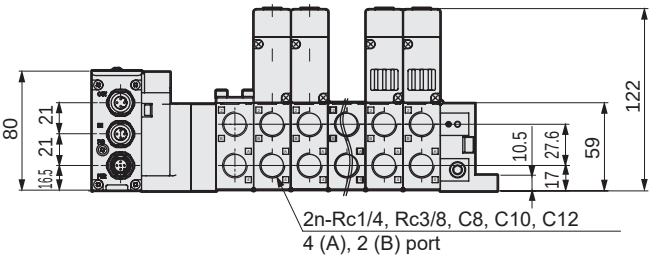

● Push-in fitting for valve block

● ø8(C8)

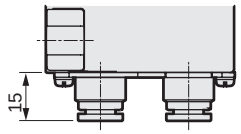

● ø10 (C10)

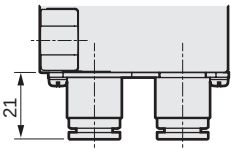

● ø12(C12)

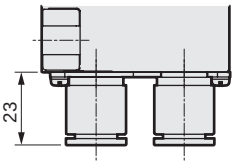

MW4GZ4 bottom piping

● Serial transmission EtherCAT (T7EC**) Left-sided spec.

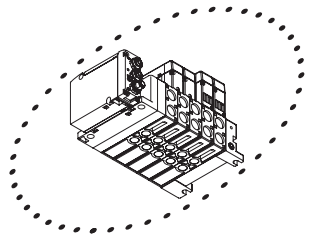

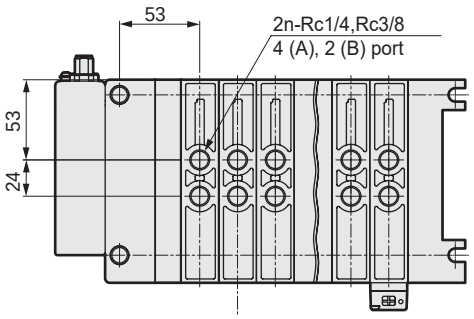

Dimensions

MW4GB4 Side piping

● Serial transmission (T7/B) with I/O type

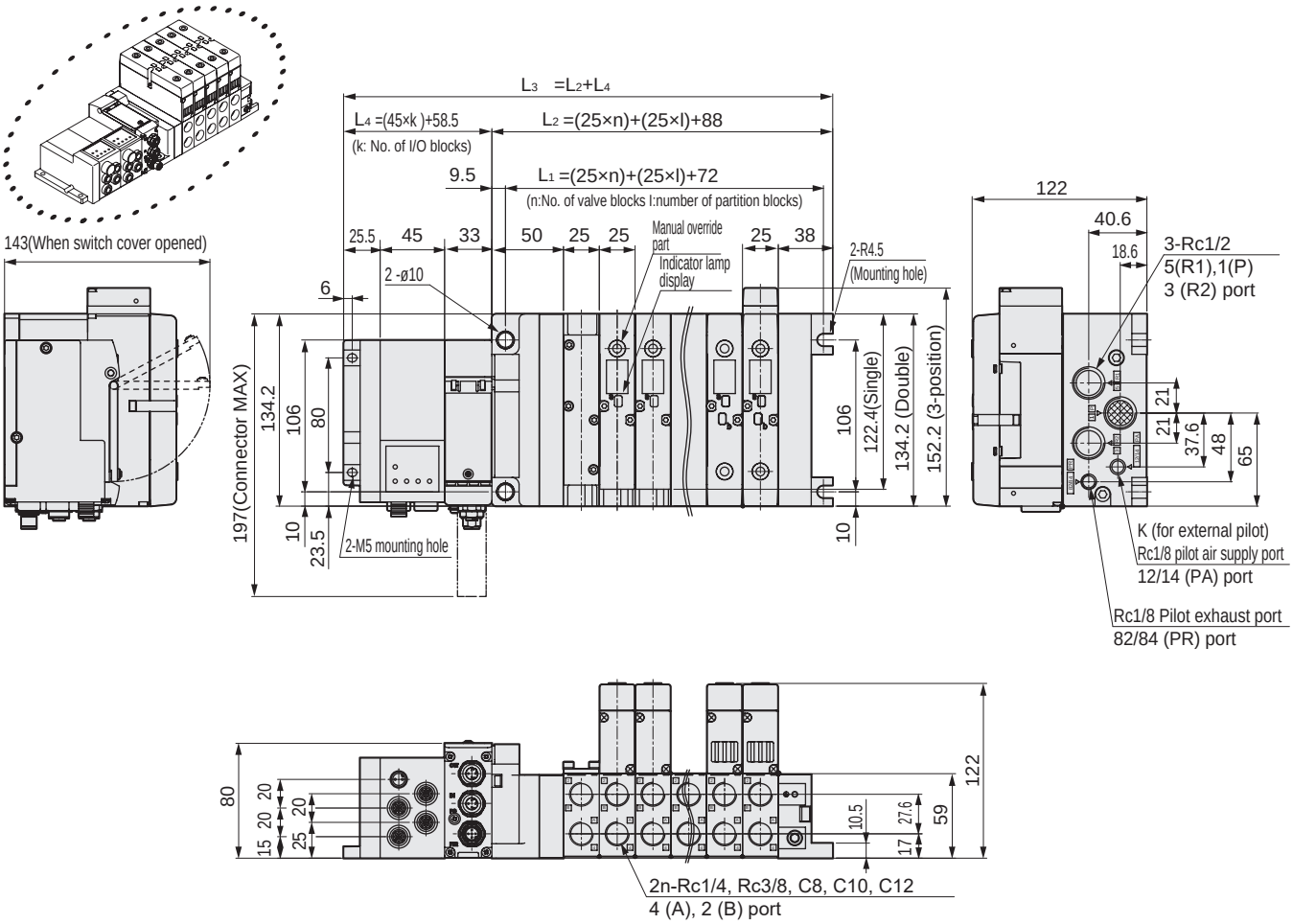

● Push-in fitting for valve block

● ø8(C8)

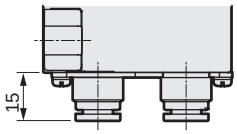

● ø10 (C10)

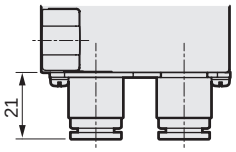

● ø12(C12)

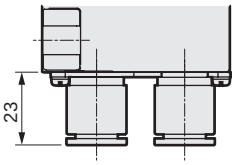

MW4GZ4 bottom piping

● Serial transmission EtherCAT (T7EC*B*) Left-sided spec.

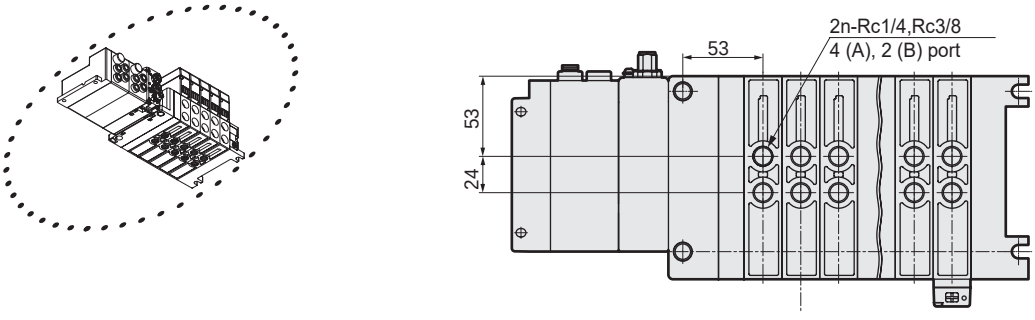

Dimensions

Common exhaust block/with exhaust cleaner

ECR

● Common exhaust block with exhaust cleaner Right

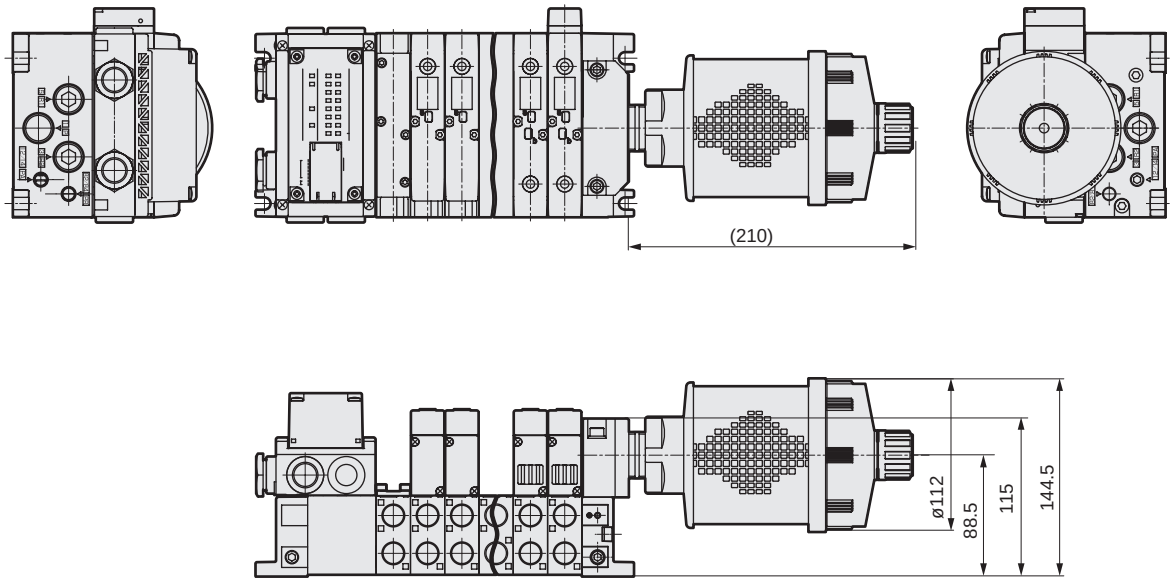

ECL

● Common exhaust block with exhaust cleaner Left

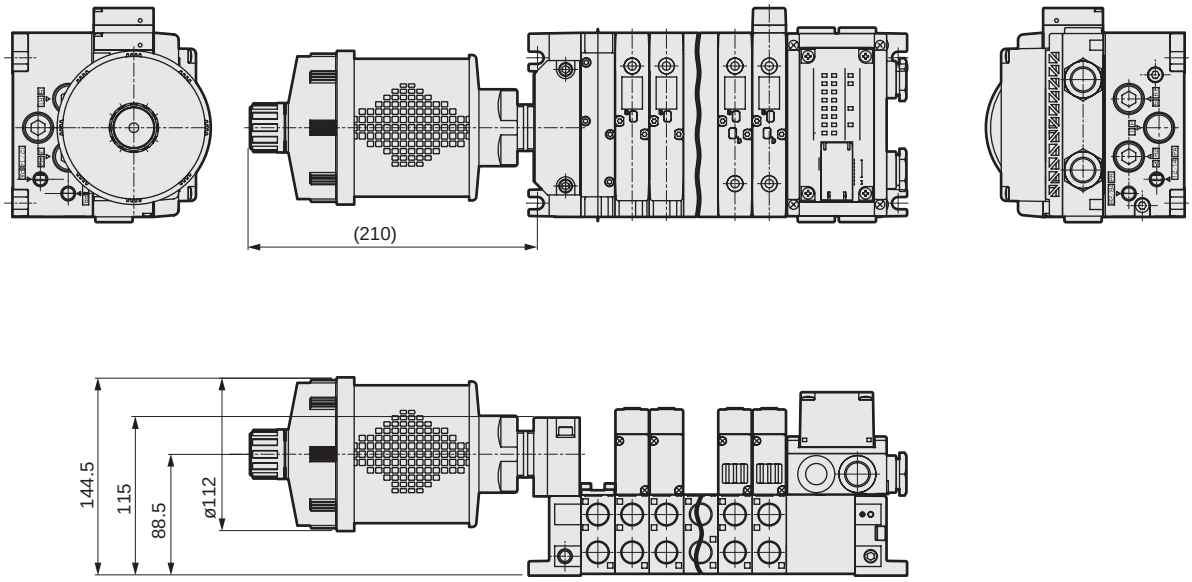

MEMO

Block manifold: Block configuration

As units can be freely assembled, it is easy to change the number of stations, perform maintenance, etc.

● Valve block with solenoid valve

(1) A necessary number of stations of necessary types of solenoid valves can be arranged.
However, the max. number of stations depends on the wiring method. (Refer to pages 1124 and 1128.)

(2) The solenoid valve No. is numbered in a series as 1, 2, 3 and so forth from the left side with the fitting facing forward.

● End block

(1) Install at both ends of manifold.

● Manifold base

(1) Manifold base alone may be ordered. However, specifications are limited.
(The manifold specifications sheet is not necessary when ordering only the manifold base.)

Block manifold configuration — **Piping** — Piping block

Ⓐ Discrete valve block with solenoid valve

● Base side piping

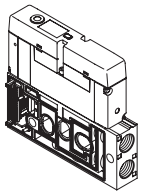

● Base bottom piping

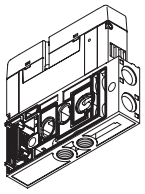

Ⓑ Discrete valve block with masking plate

● Base side piping

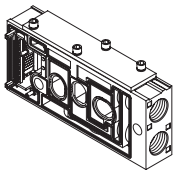

● Base bottom piping

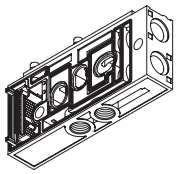

Ⓒ Discrete valve block

● Base side piping

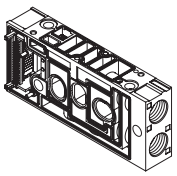

● Base bottom piping

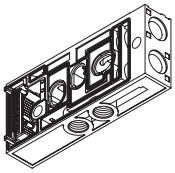

Block manifold configuration

- Piping
- Wiring
- Related products

Piping block

Ⓓ End block

● Left

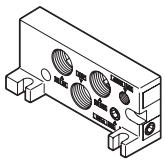

● Right

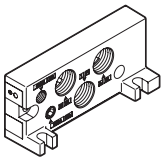

● Left (with silencer box)

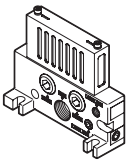

● Right (with silencer box)

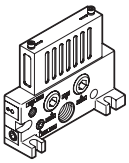

● Left (Common exhaust w/ exhaust cleaner)

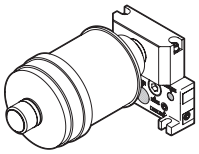

● Right (Common exhaust w/ exhaust cleaner)

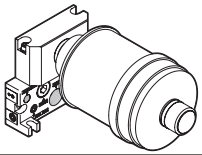

● Left (Common exhaust w/o exhaust cleaner)

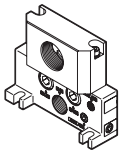

● Right (Common exhaust w/o exhaust cleaner)

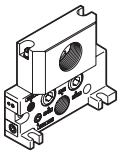

Ⓔ Partition block

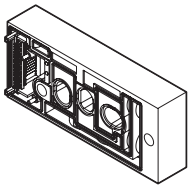

Ⓕ Manifold base

● Base side piping

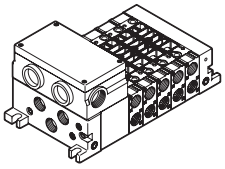

● Base bottom piping

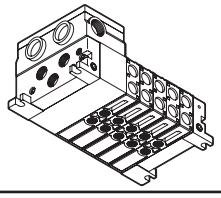

Wiring block

Ⓖ Common terminal box

● Left specifications

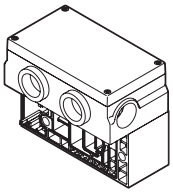

● Right-sided specifications

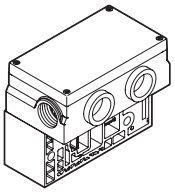

Ⓘ Serial transmission block

● T7* Left-sided specifications

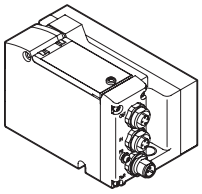

● T7* Left-sided specifications with I/O type

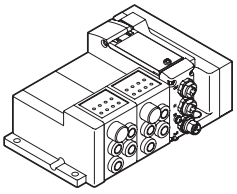

Related products

Ⓙ Related products

● Cable clamp

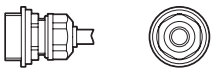

● Masking plate kit

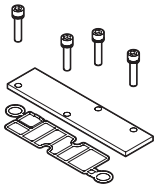

● Tie rod

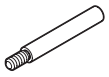

● Blanking plug

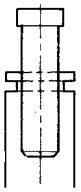

● Partition plug



● Partition block

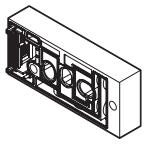

● Independent supply spacer

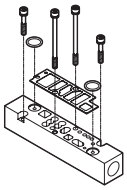

● Independent exhaust spacer

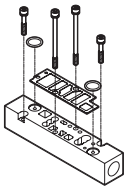

Piping

A. Discrete valve block with solenoid valve

* 2 tie rods are attached.

Block assembled from solenoid valve body and valve block (split metal base).

Refer to pages 1125, 1131 and 1132 for selection guide.

B. Discrete valve block with masking plate

* 2 tie rods are attached.

NW4GB4 - MP - 10 - R1 F

NW4GZ4 - MPD - 08 - 1 F

Ⓐ Model No. Ⓑ Type Ⓒ Port size Ⓓ Electrical connections Ⓔ Option

Ⓐ Model No.		Ⓑ Type		Ⓒ Port size [2(B), 4(A) port]		Ⓓ Electrical connections		Ⓔ Option	
NW4GB4	Base side piping	MP	Individual wiring	08	Rc1/4	Blank	Reduced wiring DC specifications	Blank	No option
NW4GZ4	Base bottom piping	MPS	Reduced wiring: single standard	10	Rc3/8	R1	I/O connector (for DC, 500 mm)	F	A/B port filter
		MPD	For reduced wiring single/double wiring, reduced wiring double/3-position	08G	G1/4	1	Common term. block AC specs, 1 to 6 stations		
				10G	G3/8 (*1)	2	Common term. block AC specs, 7 to 12 stations		
				08N	NPT1/4	3	Common term. block AC specs, 13 to 16 stations		
				10N	NPT3/8 (*1)				
				C8	ø8 push-in (*1)				
				C10	ø10 push-in (*1)				
				C12	ø12 push-in (*1)				

*1: Base bottom piping is not available.

[For DC]

NW4GB

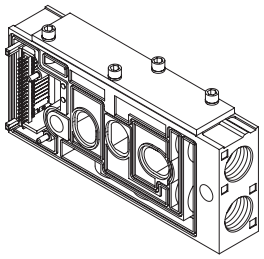

NW4GZ

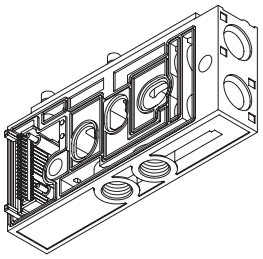

[For AC]

NW4GB

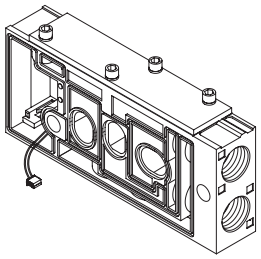

NW4GZ

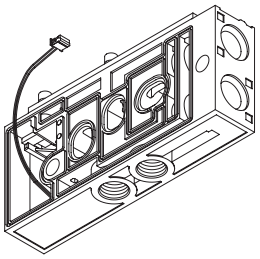

Piping

C. Discrete valve block (separate item only)

* 2 tie rods are attached.

NW4GB4 - V1 - 10 - ○○
NW4GZ4 - V2 - 08 - 1 F

Ⓐ Model No. Ⓑ Type Ⓒ Port size Ⓓ Electrical connections Ⓔ Option

Ⓐ Model No.		Ⓑ Type		Ⓒ Port size [2(B), 4(A) port]		Ⓓ Electrical connections		Ⓔ Option	
NW4GB4	Base side piping	V	Individual wiring	08	Rc1/4	Blank	Reduced wiring DC specifications	Blank	No option
NW4GZ4	Base bottom piping	V1	Reduced wiring: single standard	10	Rc3/8	R1	I/O connector (for DC, 500 mm)	F	A/B port filter
		V2	For reduced wiring single/ double wiring, reduced wiring double/3-position	08G	G1/4	1	Common term. block AC specs, 1 to 6 stations		
				10G	G3/8 (NW4GB4 only)	2	Common term. block AC specs, 7 to 12 stations		
				08N	NPT1/4	3	Common term. block AC specs, 13 to 16 stations		
				10N	NPT3/8 (NW4GB4 only)				
				C8	ø8 push-in (NW4GB4 only)				
				C10	ø10 push-in (NW4GB4 only)				
				C12	ø12 push-in (NW4GB4 only)				

[For DC]

NW4GB

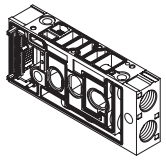

NW4GZ

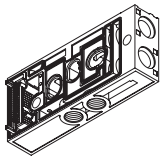

[For AC]

NW4GB

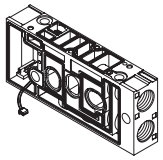

NW4GZ

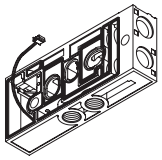

Piping

As problems may occur depending on the configuration, make selections with a sufficient understanding of the features of each block.

D. End block

An exhaust muffler is built into the atmosphere release.

NW4G4 - ER ○ K

Model No. Ⓐ Type Ⓑ Port size Ⓒ Option

Ⓐ Type		Ⓑ Port size [1(P), 3(R2), 5(R1) port]		Ⓒ Option	
EL	Common exhaust Left (*1) (*2)	Blank	Rc1/2	Blank	No option
ER	Common exhaust Right (*1) (*2)	G	G1/2	K	External pilot (*2)
EXL	Atm release left side, silencer box (*1) (*2)	N	NPT1/2		
EXR	Atm release right side, silencer box (*1) (*2)				
ECL	Common exhaust block/cleaner left side (*1) (*2)				
ECR	Common exhaust block/cleaner right side (*1) (*2)				
ENCL	Common exhaust block/cleaner left side (*1) (*2)				
ENCR	Common exhaust block/cleaner right side (*1) (*2)				

*1: With “EXL”, “ECL”, or “ENCL” it is only possible to select “ER”. With “EXR”, “ECR”, or “ENCR” it is only possible to select “EL”.
*2: With “K” it is only possible to select “EL” or “ER”.

NW4G4-EL

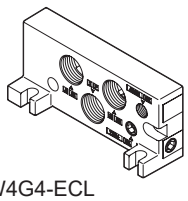

NW4G4-ER

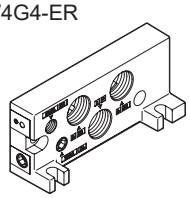

NW4G4-EXL

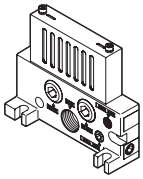

NW4G4-EXR

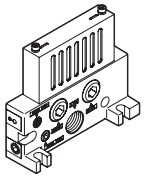

NW4G4-ECL

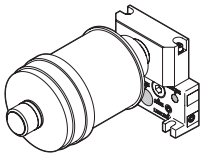

NW4G4-ECR

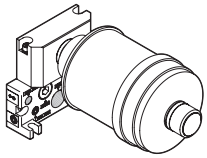

NW4G4-ENCL

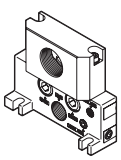

NW4G4-ENCR

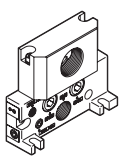

Piping

E. Partition block

* 2 tie rods are attached.

NW4G4 - SA - ○

Model No. Ⓐ Type Ⓑ Voltage

Ⓐ Type (*1)		Ⓑ Voltage	
SA	P/R/PA/PR blocked	**Blank**	For DC
		AC	For AC

[For DC]
NW4G4-SA

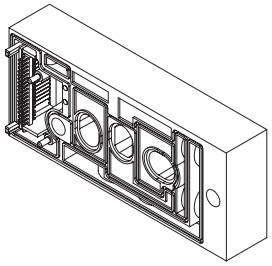

[For AC]
NW4G4-SA-AC

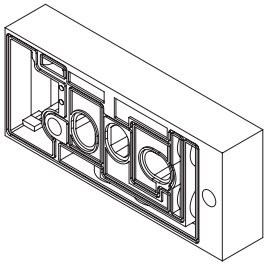

Refer to the following page when selecting partition specifications.

Piping

● Notes on configuring manifold

- The end blocks differ between the internal pilot and external pilot.
  The valve and valve block are common in both types.
- Select a partition block when splitting the pilot flow path [12/14(PA), 82/84(PR)].
  The partition plug is only capable of splitting the main flow path [1(P), 5(R1), 3(R2)].

● Partition specifications

- By using partition plugs and partition blocks, it is possible to configure various pneumatic systems.
  As certain configurations may lead to defects, make selections with a thorough understanding of the features of each unit.

(1) Internal pilot

· Partition block used · Partition plug used

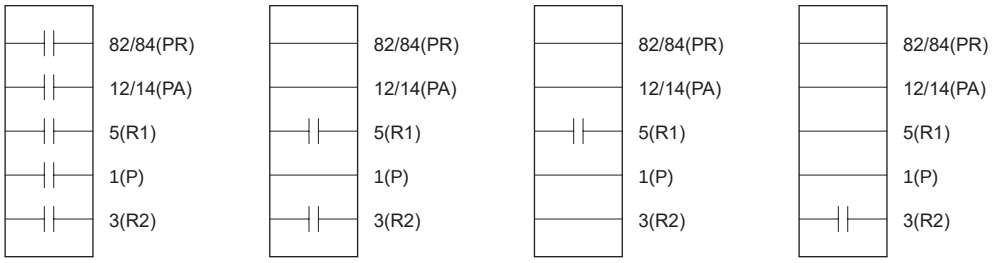

Note. It is not possible to separate the 1(P) flow path with an internal pilot.
This is because the 1(P) flow path and 12/14(PA) flow path are connected with the end block.

(2) External pilot

· Partition block used · Partition plug used

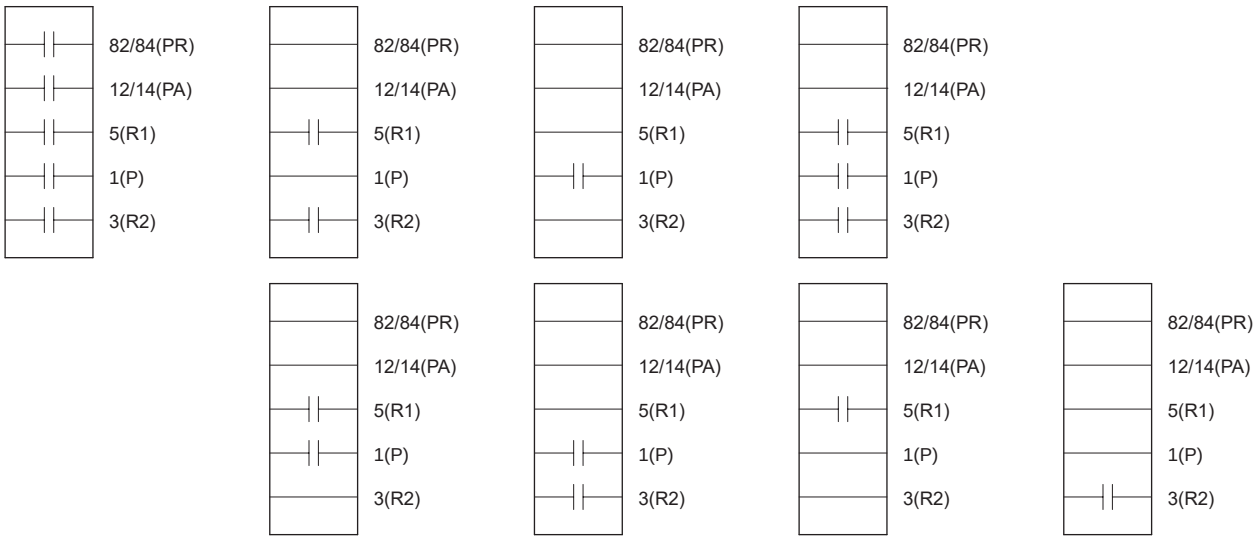

[Partition block]

Model No.: NW4G4-SA(-AC)
Listed on page 708

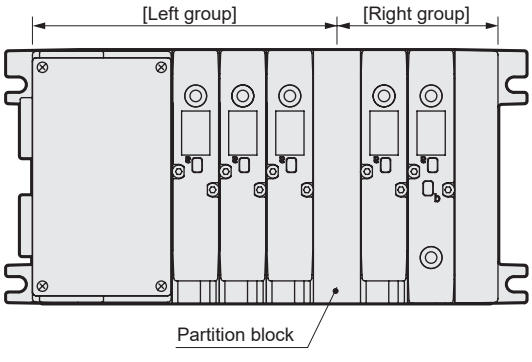

· This separates the main air supply, exhaust, and pilot flow path.
· The dimensions will increase for a block width of 25 mm.

[Partition plug]

Model No.: M4TB3-NC
Listed on page 712

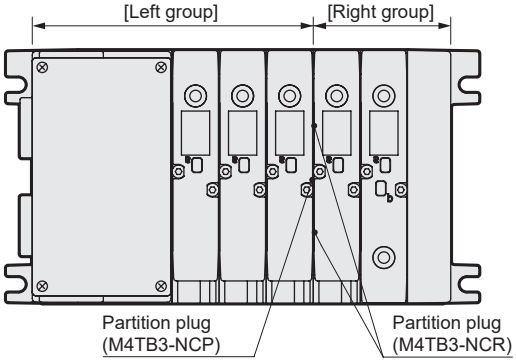

· This can be used without an increase in dimensions.
· It is possible to separate the main air supply and exhaust.

Piping

F. Manifold base

Manifold base alone may be ordered. However, specifications are limited.
(The manifold specifications sheet is not necessary when ordering only the manifold base.)

MW4GB4
(Base side piping)

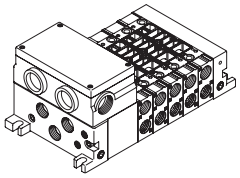

MW4GZ4
(Base bottom piping)

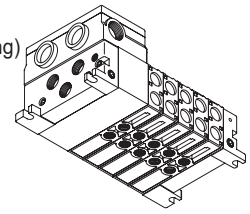

Base side piping: **MW4GB4** - **10** [ ] - **R1** [ ] **F** - **5** - **3**

Base bottom piping: **MW4GZ4** - **08** **XD** - **T10R** **W** **A** - **6** - **3**

Ⓐ Model No. Ⓑ Port size Ⓒ End block Ⓓ Wiring method Ⓔ Terminal/connector pin array Ⓕ Option Ⓖ Station No. Ⓗ Voltage

Ⓐ Model No.		Ⓑ Port size [2(B), 4(A) port]		Ⓒ End block		Ⓓ Wiring method		
NW4GB4	Base side piping	**08**	Rc1/4	**Blank**	Common exhaust	**R 1**	Individual wiring I/O cable outlet	(*4)
NW4GZ4	Base bottom piping	**10**	Rc3/8	**XU**	Atmosphere release silencer BOX right side (*2)(*3)	**T10**	Common terminal block	(*2)
		08G	G1/4	**XD**	Atmosphere release silencer BOX left side(*2)(*3)	**T10R**	Common terminal block (right)	(*2)
		10G	G3/8 (*1)	**CU**	Common exhaust block/with exhaust cleaner Right (*2)(*3)	**T30**	D-sub-connector (*2)	(*5)
		08 N	NPT1/4	**CD**	Common exhaust block/with exhaust cleaner Left (*2)(*3)	**T30R**	D-sub-connector (right) (*2)	(*5)
		10N	NPT3/8 (*1)	**EU**	Common exhaust block without exhaust cleaner Right (*2)(*3)	**T7EC1**	Thin EtherCAT 16 point output(NPN valve output)	(*6)
		C8	ø8 push-in (*1)	**ED**	Common exhaust block without exhaust cleaner left side (*2)(*3)	**T7ECP1**	Thin EtherCAT 16 point output(PNP valve output)	(*6)
		C10	ø10 push-in (*1)			**T7EN1**	Thin EtherNet/IP 16-point output (NPN valve output)	(*6)
		C12	ø12 push-in (*1)			**T7ENP1**	Thin EtherNet/IP 16-point output (PNP valve output)	(*6)
						T7EB1	Thin CC-Link IEF Basic 16-point output (NPN valve output)	(*6)
						T7EBP1	Thin CC-Link IEF Basic 16-point output (NPN valve output)	(*6)
						T7EP1	Thin PROFINET 16-point output (NPN valve output)	(*6)
						T7EPP1	Thin PROFINET 16-point output (NPN valve output)	(*6)

*1 Base bottom piping is not available.

*2 When the wiring connection is for the left side, it is not possible to select "XD", "CD", or "ED". When the wiring connection is for the right side, it is not possible to select "XU", "CU", or "EU".

*3 With "K" it is only possible to select "Blank".

*4 With R1, the voltage is only available with DC specifications.
*5 For made to order supported, contact CKD Sales.
6 With T7, the voltage is 24 VDC only.

Terminal/connector pin array method (*7)		Ⓕ Option		Ⓖ Station No.		Ⓗ Voltage	
Blank	Standard wiring	**Blank**	No option	**1**	1 stations	**1**	100 VAC
W	Double wiring	**K**	External pilot (*3)	**to**	to	**3**	24 VDC
		A	Coolant proof	**8**	8 stations	**4**	12 VDC
		F	Port A/B filter			**5**	110 VAC

*7 I/O block cannot be selected.

Wiring (Wiring block) * Discrete wiring blocks can be ordered only with DC specifications.

G. Common terminal box (T10) * 2 tie rods are attached.

● Left-sided specifications
NW4G4-T10

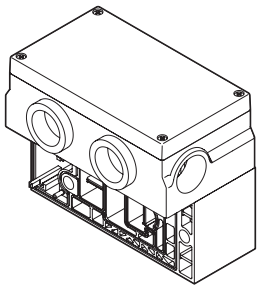

● Right-sided specifications
NW4G4-T10R

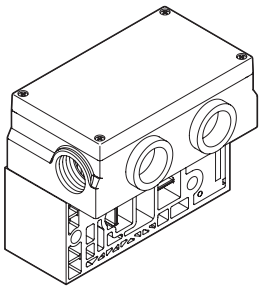

H. D-sub-connector (T30)(For made to order supported, contact CKD Sales)

● Left-sided specifications
NW4G4-T30

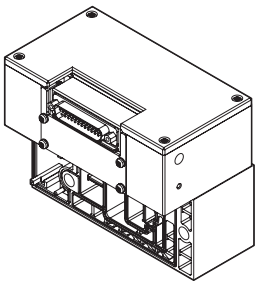

● Right-sided specifications
NW4G4-T30R

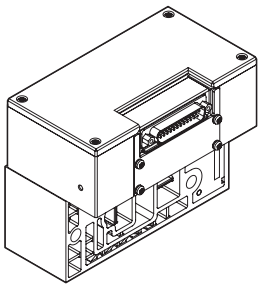

I. Serial transmission block * 2 tie rods are attached.

● Left-sided specifications

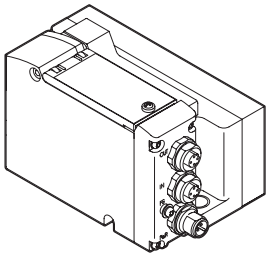

NW4G4 - T7EC1
Ⓐ Type

* Contact CKD when ordering a single item.

Ⓐ Type	
T7EC1	EtherCAT 16 points (NPN output)
T7ECP1	EtherCAT 16 points (PNP output)
T7ECB7	EtherCAT 16 points/16 points (NPN output)
T7ECPB7	EtherCAT 16 points/16 points (PNP output)
T7EN1	EtherNet/IP 16 points (NPN output)
T7ENP1	EtherNet/IP 16 points (PNP output)
T7ENB7	EtherNet/IP 16/16 points (NPN output)
T7ENBP7	EtherNet/IP 16/16 points (PNP output)
T7EB1	CC-Link IEF Basic 16 points (NPN output)
T7EBP1	CC-Link IEF Basic 16 points (PNP output)
T7EBB7	CC-Link IEF Basic 16/16 points (NPN output)
T7EBPB7	CC-Link IEF Basic 16/16 points (PNP output)
T7EP1	PROFINET 16 points (NPN output)
T7EPP1	PROFINET 16 points (PNP output)
T7EPB7	PROFINET 16/16 points (NPN output)
T7EPPB7	PROFINET 16/16 points (PNP output)

Coolant proof specifications

Select option “A” of Item Ⓑ in How to order.

Discrete serial transmission device unit model No.

W4G - OPP8 - 1EC

Ⓐ Type

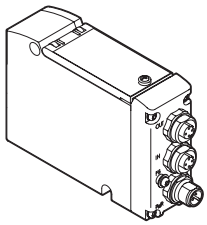

Ⓐ Type		
1EC	T7EC1	EtherCAT16 points (NPN output)
1EC-P	T7ECP1	EtherCAT16 points (PNP output)
7EC-B	T7ECB7	EtherCAT16 points/16 points (NPN output)
7EC-PB	T7ECPB7	EtherCAT16 points/16 points (PNP output)
1EN	T7EN1	EtherNet/IP 16 points (NPN output)
1EN-P	T7ENP1	EtherNet/IP 16 points (PNP output)
7EN-B	T7ENB7	EtherNet/IP 16 points/16 points (NPN output)
7EN-PB	T7ENBP7	EtherNet/IP 16 points/16 points (PNP output)
1EB	T7EB1	CC-Link IEF Basic 16 points (NPN output)
1EB-P	T7EBP1	CC-Link IEF Basic 16 points (PNP output)
7EB-B	T7EBB7	CC-Link IEF Basic 16 points/16 points (NPN output)
7EB-PB	T7EBPB7	CC-Link IEF Basic 16 points/16 points (PNP output)
1EP	T7EP1	PROFINET 16 points (NPN output)
1EP-P	T7EPP1	PROFINET 16 points (PNP output)
7EP-B	T7EPB7	PROFINET 16 points/16 points (NPN output)
7EP-PB	T7EPPB7	PROFINET 16 points/16 points (PNP output)

M. I/O block

* Two tie rods are supplied when it is ordered for expansion.

Side wiring: **NW4GB2 - OUT - N - B**

Ⓐ I/O
Ⓑ I/O type
Ⓒ Power supply

Ⓐ I/O		Ⓑ I/O type		Ⓒ Power supply	
IN	Input	**N**	Sink	**K**	Shared with serial transmission device unit *1, *2
OUT	Output	**P**	Source	**B**	External power supply

*1 Output block can be used with external power supply (B) only.
*2 A waterproof cap is attached as standard to the power supply connector of the power supply shared (K) with the serial transmission device unit.
*3 When serial transmission device unit is T7, all are side wiring.

NW4GB2-$\frac{IN}{OUT}$-$\frac{N}{P}$-$\frac{K}{B}$

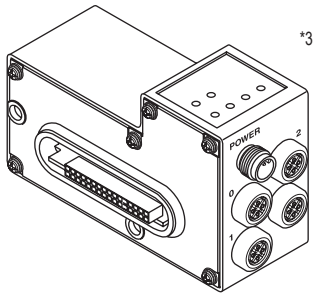

* When ordered as manifold component and combined with I/O block, an end block is mounted on the left as standard.

I/O type [Simplified circuit]

Input block

Sink

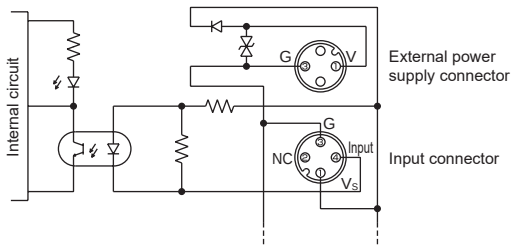

Output block

Sink

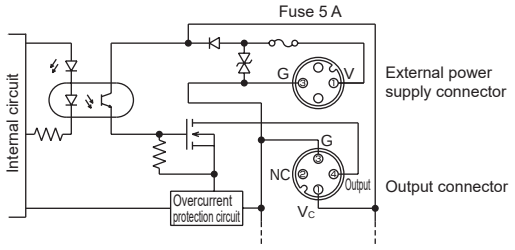

Source

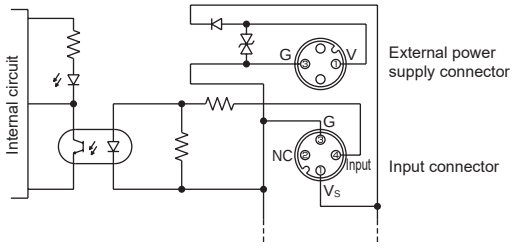

Source

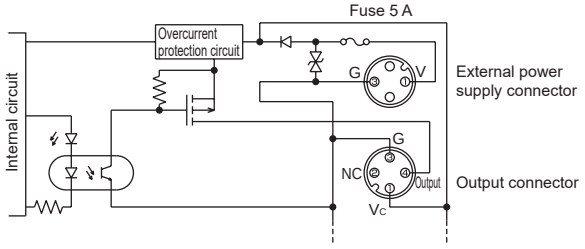

* For wiring methods, refer to page 1087.

Related products

● Cable clamp

For T10

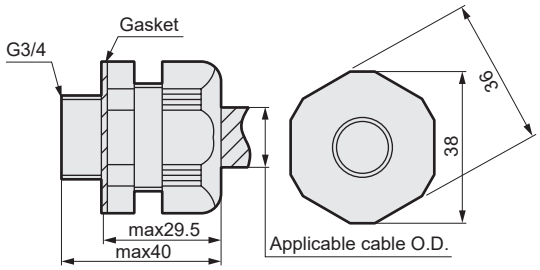

(Reference value)
Cable clamp body tightening torque : 4.0 to 4.5 N·m
Tightening cap tightening torque : 3.0 to 3.5 N·m

W4G - SCL-18A
Ⓐ Type

Ⓐ Type	
Code	**Thread size, applicable cable O.D.**
SCL-18A	G3/4, ø14.5 to 16.5
SCL-18B	G3/4, ø16.5 to 18.5

For T6*

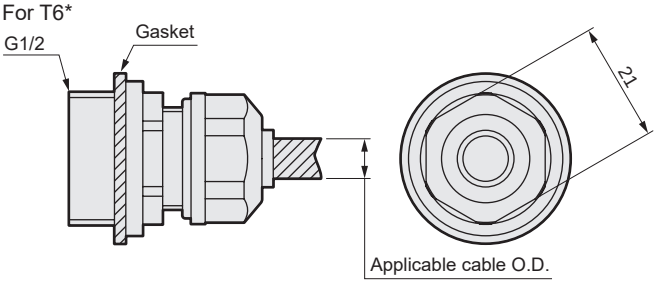

Applicable cable O.D. : ø6 to ø8
(Reference value)
Cable clamp body tightening torque : 2.0 to 2.4 N·m
Tightening cap tightening torque : 0.5 to 0.7 N·m

W4G - OA-W1608C1
Ⓐ Type

Ⓐ Type	
Code	**Thread size, applicable cable O.D.**
OA-W1608C1	G1/2, ø6 to 8

● Masking plate kit

W4G4-MP

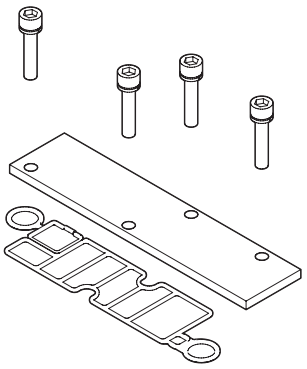

* Contents of kit: Masking plate, body gasket, 4 mounting screws

● Tie rod

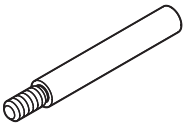

* Set of 2

W4G4 - TR - V1
Ⓐ Type

Ⓐ Type	
V1	For 1 station valve block
V2	For 2 stations valve block
V3	For 3 stations valve block
V4	For 4 stations valve block
V5	For 5 stations valve block
V6	For 6 stations valve block
V7	For 7 stations valve block
V8	For 8 stations valve block

● Blanking plug

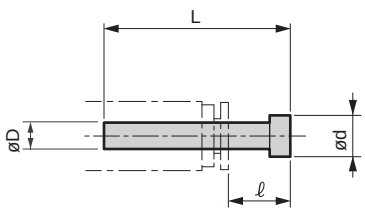

Model No.	D	L	ℓ	d
GWP8-B	ø8	33	14	10
GWP10-B	ø10	40	18.5	12
GWP12-B	ø12	43	20	14

● Partition plug

M4TB3-NC

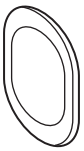

Refer to page 1151.

● Fuse

4T9-LM20

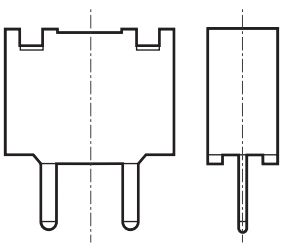

Related products

● Independent supply spacer

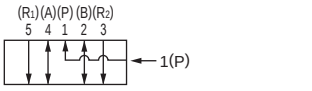

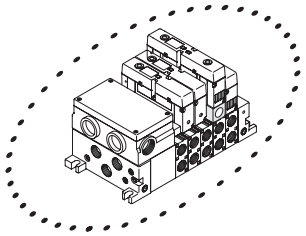

W4G4 - P - 08
Ⓐ Port size

Ⓐ Port size [1(P) port]	
08	Rc1/4
10	Rc3/8
08G	G1/4
10G	G3/8
08N	NPT1/4
10N	NPT3/8

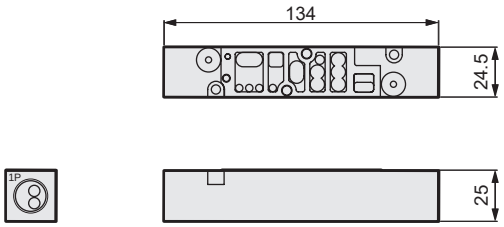

Dimensions when mounted

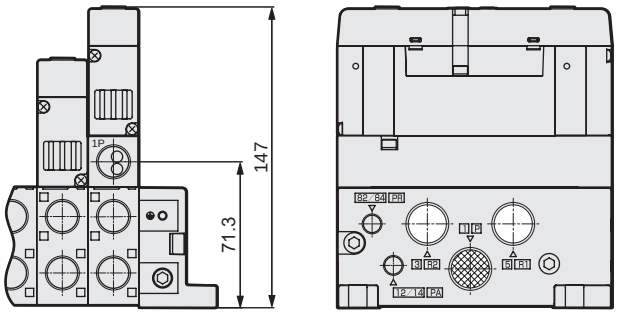

● Independent exhaust spacer

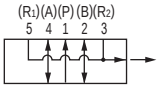

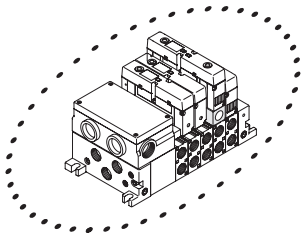

W4G4 - R - 08
Ⓐ Port size

Ⓐ Port size [3, 5(R) port]	
08	Rc1/4
10	Rc3/8
08G	G1/4
10G	G3/8
08N	NPT1/4
10N	NPT3/8

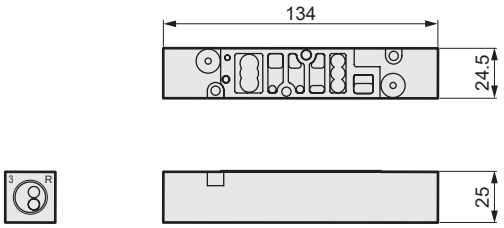

Dimensions when mounted

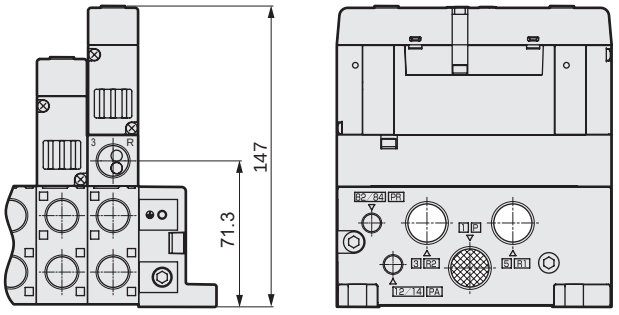

*1: When exhaust spacers will be adjacent to each other, take care that they do not interfere with the silencer.

Internal structure and parts list

NW4GB410 base side piping

● 2-position single

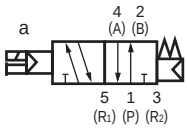

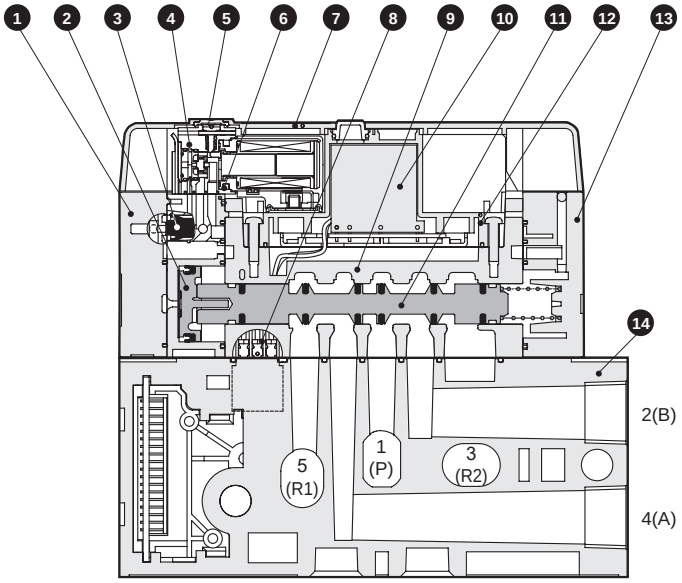

NW4GZ410 base bottom piping * The solenoid valve is the same as NW4GB410.

● 2-position single

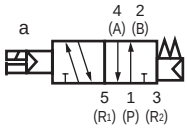

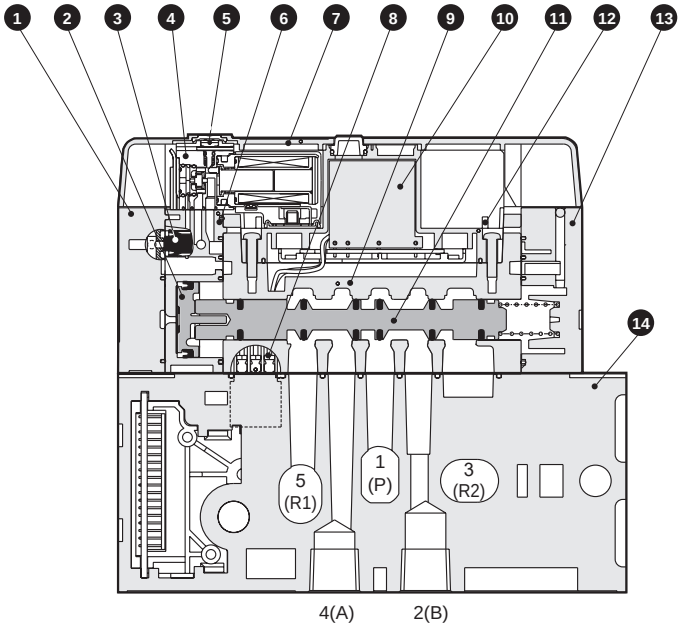

Main parts list

No.	Part name	Material	No.	Part name	Material
1	Cap D3	PA	8	Wiring connector	-
2	Piston assembly	-	9	Body	Aluminum
3	Quick exhaust valve	H-NBR	10	Wiring base	-
4	Pilot valve	-	11	Spool assembly	-
5	Manual override	PBT	12	Drip-proof cover	PBT
6	Pilot valve assembly SD	-	13	Cap S	PA
7	Decorative cover	PBT	14	Valve block	Aluminum

Internal structure and parts list

W4GB410 Single unit Base side piping

● 2-position single

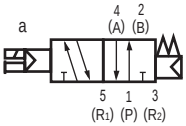

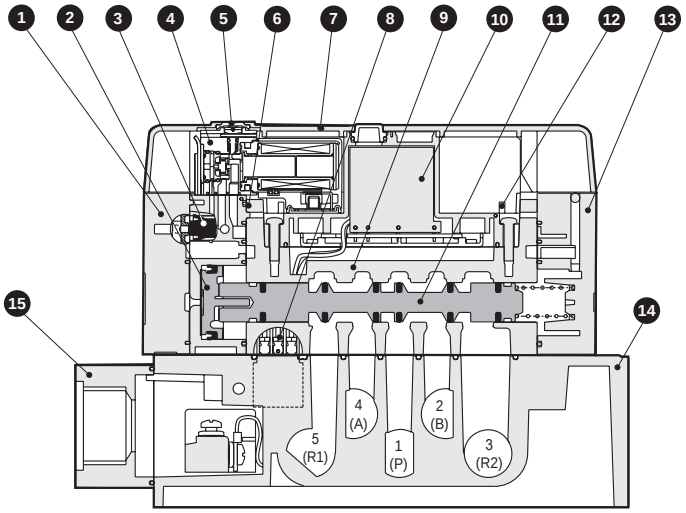

W4GZ410 Single unit Base bottom piping

* The solenoid valve is the same as W4GB410.

● 2-position single

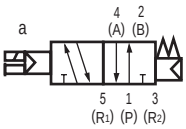

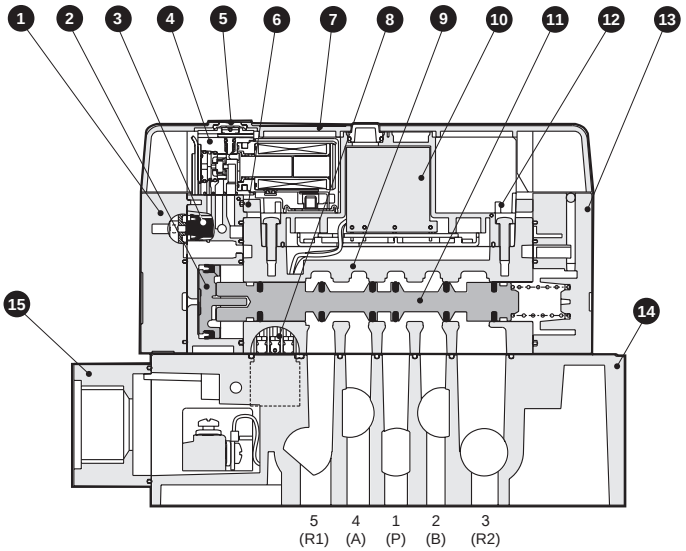

Main parts list

No.	Part name	Material	No.	Part name	Material
1	Cap D3	PA	9	Body	Aluminum
2	Piston assembly	-	10	Wiring base	-
3	Quick exhaust valve	H-NBR	11	Spool assembly	-
4	Pilot valve	-	12	Drip-proof cover	PBT
5	Manual override	PBT	13	Cap S	PA
6	Pilot valve assembly SD	-	14	Single sub-base	Aluminum
7	Decorative cover	PBT	15	Terminal block cover	PBT
8	Wiring connector	-			

Internal structure and parts list

NW4G$^{B}_{Z}$420/W4GB420

● 2-position double

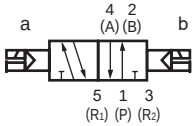

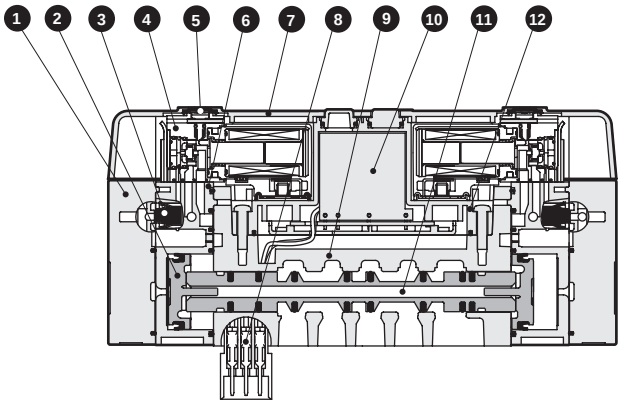

NW4G$^{B}_{Z}$4$^{3}_{4,5}$0/W4GB4$^{3}_{4,5}$0

● 3-position

All ports closed

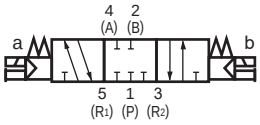

A/B/R connection

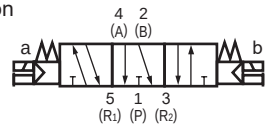

P/A/B connection

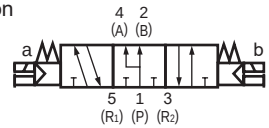

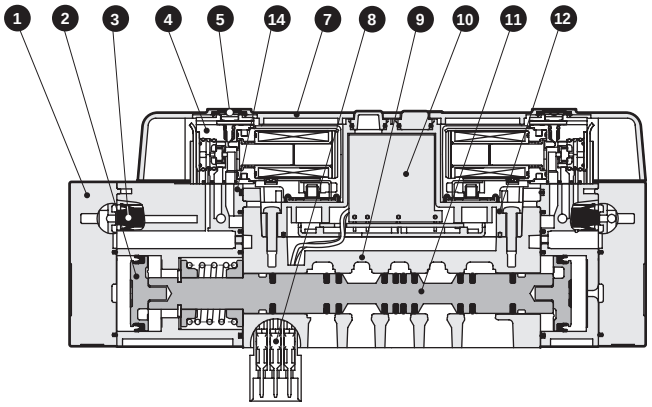

● With pilot air OFF function (M7)

* 2-position double solenoid shown in image

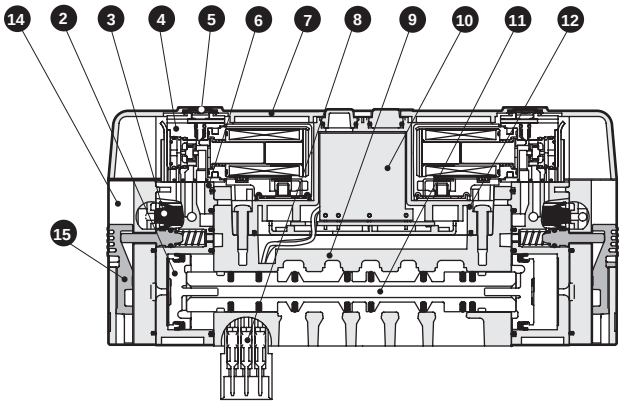

Main parts list

No.	Part name	Material	No.	Part name	Material
1	Cap D3	PA	9	Body	Aluminum
2	Piston assembly	-	10	Wiring base	-
3	Quick exhaust valve	H-NBR	11	Spool assembly	-
4	Pilot valve	-	12	Drip-proof cover	PBT
5	Manual override	PBT	13	Cap S	PA
6	Pilot valve assembly SD	-	14	M7 Cap	PA
7	Decorative cover	PBT	15	M7 Switch	PA
8	Wiring connector	-			

Technical data ❶ Pneumatic system selection guide

(1) The cylinder average speed is obtained from the combination of W4G4 Series and piping system. It is expressed as the cylinder's piston speed calculated by dividing the Stroke by the time that the piston rod takes from start to end of movement with the cylinder rod installed facing upward. When the load factor is 50%, the average speed should be approximately the cylinder's piston speed multiplied by 0.5.
(2) The cylinder average speed described in "Pneumatic system components selection guide" is that when one cylinder is operated alone.
(3) The effective cross-sectional area of the solenoid valve used for the calculation below is the 2-position value.
(4) This selection guide is for reference. With the CKD sizing program, confirm conditions to be actually used.
(5) Effective cross-sectional area S and sonic conductance C are converted as S ≈ 5.0 x C.

Standard system table

Valve	System No.	Speed controller	Silencer	Piping	Composite effective cross-sectional area (mm^2) pipe length 1 m
W4GB410	C2	SC1-8	SLW-8A	ø10xø7.2	9.7
	C3	SC1-10	SLW-10A	ø15xø11.5	15.6

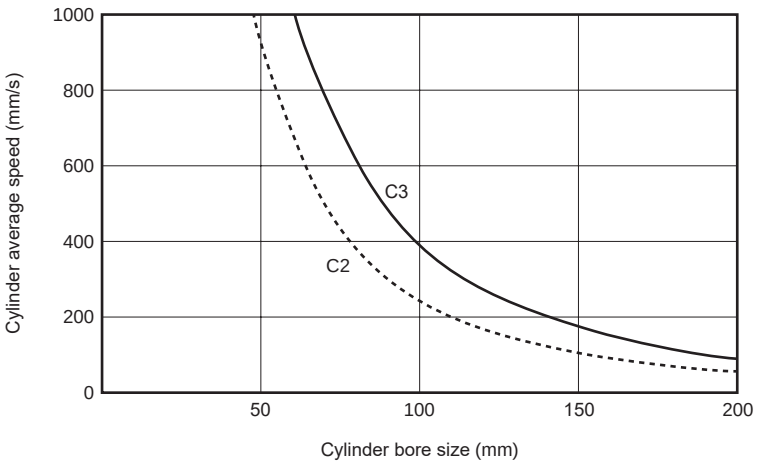

How to use the guide

Device selection guide is used to select the optimum model at a glance.

● Fluid control components selection

Whether the cylinder bore size and cylinder being used are driven with relative high or low speed is determined as a condition. Using the table shown below as a reference, select the theoretical reference speed of the cylinder.

Degree of cylinder speed	Theoretical reference speed (mm/s)
Low speed	250
Medium speed	500
High speed	750
Ultra high speed	1,000

Using the table in the device selection guide 1 (next page), select the equivalent bore size of cylinder tube and the proper standard system No. corresponding to theoretical reference speed.

Explanation of technical terms

● Theoretical reference speed: indicates degree of cylinder speed, expressed as the following formula. (This value matches speed with no load. When load is applied, speed drops considerably.)

$$vo=1920\times\frac{S}{A}\ 2445\times\frac{S}{D^2} \quad \text{——————} (1)$$

vo: Theoretical reference speed (mm/s)
A : Cylinder sectional area (cm^2)
S : Composite effective cross-sectional area of circuit (exhaust air side) (mm^2)
D : Cylinder bore size (cm)

When expressed as a graph, the theoretical reference speed is the speed within the range where the cylinder moves at a uniform speed

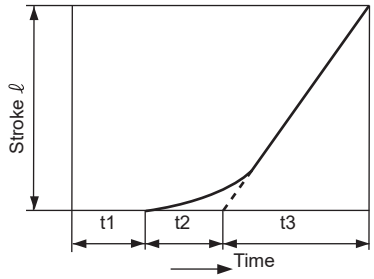

$$vo=\frac{\ell}{t3}(A/s)$$

t1 : Time until movement starts
t2 : Time of primary delay
t3 : Operating time with constant velocity
ℓ : Stroke

● Note:t1 and t2 differ depending on load.
Can be effectively ignored with no load.

● Required flow rate: indicates instantaneous flow rate for operating a cylinder with velocity *vo*, expressed with the following formula. Values in the table are when P = 0.5 MPa. The required flow rate is a value necessary to select clean air system components.

$$Q=\frac{Avo(P+0.101)\times60}{0.101\times10^4}=\left[\frac{Avo(P+1.03)\times60}{1.03\times10^4}\right] \quad \text{——————} (2)$$

Q: Required flow rate (RX) (ANR)
P: Supply pressure (MPa)

● Required effective sectional area: indicates composite effective cross sectional area for the exhaust circuit required for moving the cylinder at speed *vo*. (Composite effective cross-sectional area of valve, speed controller, silencer or piping)

● Proper standard system: indicates the most appropriate combination of valve, speed controller, silencer and bore size for operating a cylinder with velocity *vo*. The combination in the table is for a pipe length of 1 m.

Calculation method of flow rate

Depending on the actual unit, they are shown as follows.

Choked flow when $\frac{P_2+0.1}{P_1+0.1}\le b$

$$Q=600\times C(P_1+0.1)\sqrt{\frac{293}{273+t}} \quad \text{——————} (1)$$

Subsonic flow when $\frac{P_2+0.1}{P_1+0.1}>b$

$$Q=600\times C(P_1+0.1)\sqrt{1-\left[\frac{\frac{P_2+0.1}{P_1+0.1}-b}{1-b}\right]^2}\sqrt{\frac{293}{273+t}} \quad \text{——————} (2)$$

Q : Air flow rate [dm^3/min(ANR)], SI unit dm^3 (cubic decimeter) can also be expressed with ℓ (liter). 1 dm^3 = 1 ℓ
C : Sonic conductance [dm^3/(s·bar)]
b : Critical pressure ratio [-]
P_1 : Upstream pressure [MPa]
P_2 : Downstream pressure [MPa]
t : Temperature [°C]

When calculating with effective cross-sectional area S, substitute value C obtained with C = S/5 in the above formula.
For subsonic flow, substitute b = 0.5 in formula (2).

[Device selection guide 1]

Cylinder bore size (mm)	Theoretical reference speed (mm/s)	Required flow rate (ℓ/min) (ANR)	Required effective sectional area (mm^2)	Proper standard system No. Exhaust with silencer
ø40	250	112	1.6	A
	500	224	3.3	B
	750	336	4.9	B
	1000	448	6.5	C1
ø50	250	175	2.6	A
	500	350	5.1	B
	750	526	7.7	C1
	1000	701	10.2	C2
ø63	250	278	4.1	B
	500	556	8.1	C2
	750	834	12.2	C2
	1000	1112	16.2	C3
ø80	250	448	6.5	C1
	500	897	13.1	C2
	750	1345	19.6	C3
	1000	1794	26.2	C4
ø100	250	701	10.2	C2
	500	1401	20.4	C3
	750	2102	30.7	C4
	1000	2803	40.9	D1
ø125	250	1095	16.0	C3
	500	1401	31.9	C4
	750	2102	47.9	D1
	1000	2803	63.9	D2

* Refer to page 1160 for system No.

[Effective cross-sectional area]

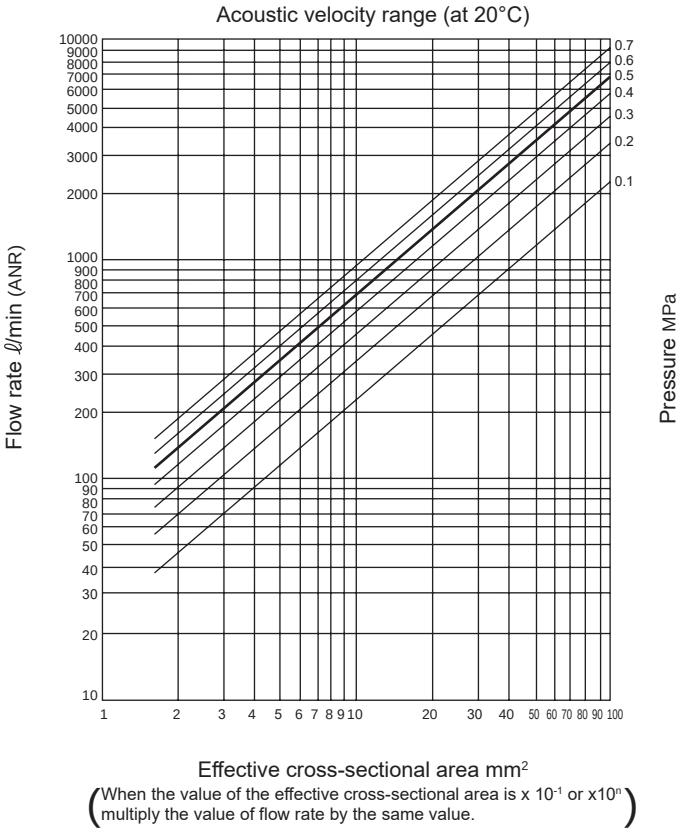

(When the value of the effective cross-sectional area is x 10^{-1} or x10^{n} multiply the value of flow rate by the same value.)

[Clean air system components]

Clean air system components

Part name	Model No.	Port size	Max. flow rate (ℓ/min, atmospheric pressure conversion value)
F.R.L. kit	C1000-6-W	Rc1/8	450
	C1000-8-W	Rc1/4	630
	C3000-8-W	Rc1/4	1280
	C3000-10-W	Rc3/8	1750
	C4000-8-W	Rc1/4	1430
	C4000-10-W	Rc3/8	2400
	C4000-15-W	Rc1/2	3000
F.R. unit	W1000-6-W	Rc1/8	830
	W1000-8-W	Rc1/4	1150
	W3000-8-W	Rc1/4	2150
	W3000-10-W	Rc3/8	2430
	W4000-8-W	Rc1/4	2500
	W4000-10-W	Rc3/8	4350
	W4000-15-W	Rc1/2	4750
Air filter (F)	F1000-6-W	Rc1/8	460
	F1000-8-W	Rc1/4	610
	F3000-8-W	Rc1/4	1230
	F3000-10-W	Rc3/8	1500
	F4000-8-W	Rc1/4	1320
	F4000-10-W	Rc3/8	2140
	F4000-15-W	Rc1/2	3000
Regulator (R)	R1000-6-W	Rc1/8	770
	R1000-8-W	Rc1/4	1350
	R3000-8-W	Rc1/4	2000
	R3000-10-W	Rc3/8	2600
	R4000-8-W	Rc1/4	2500
	R4000-10-W	Rc3/8	4400
	R4000-15-W	Rc1/2	5000
Lubricator (L)	L1000-6-W	Rc1/8	550
	L1000-8-W	Rc1/4	700
	L3000-8-W	Rc1/4	1100
	L3000-10-W	Rc3/8	2250
	L4000-8-W	Rc1/4	1000
	L4000-10-W	Rc3/8	1700
	L4000-15-W	Rc1/2	2700

Note) Max. flow rate: For FRL, FR and R, flow rate at 0.7 MPa primary pressure, 0.5 MPa set pressure, 0.1 MPa pressure drop. For air filter, flow rate at 0.7 MPa primary pressure, 0.02 MPa pressure drop. For lubricator, flow rate at 0.5 MPa primary pressure, 0.03 MPa pressure.

MEMO

Common terminal box (wiring method T10)

Notes on wiring

[Precautions for common terminal box (T10)]

(1) With the common terminal box, the common wiring is internally processed beforehand. When using the independent contact PLC output unit, wire the common wires at the contact section.
(2) Check the correspondence of the number of stations with solenoid positions to prevent incorrect wiring. (Refer to the table below.)
(3) Note that the correspondence will not function if the number of solenoid stations exceeds 16.
(4) The manifold station numbers are set in order from left with the piping port facing forward.
(5) A voltage drop may occur due to simultaneous energizing or cable length. Confirm that the voltage drop for the solenoid is within 10% of the rated voltage.

Internal wiring of wiring method T10 (up to 16 solenoid stations)

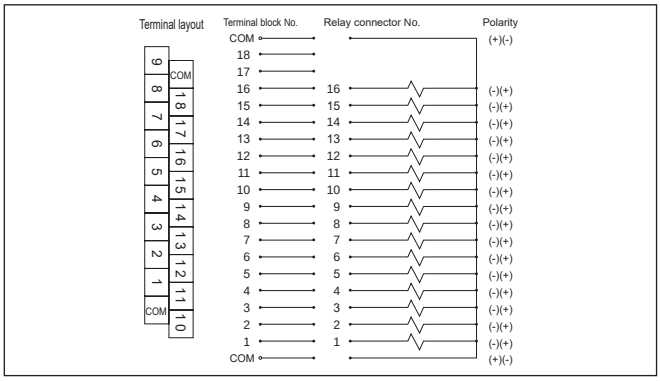

T10 (left side specifications)

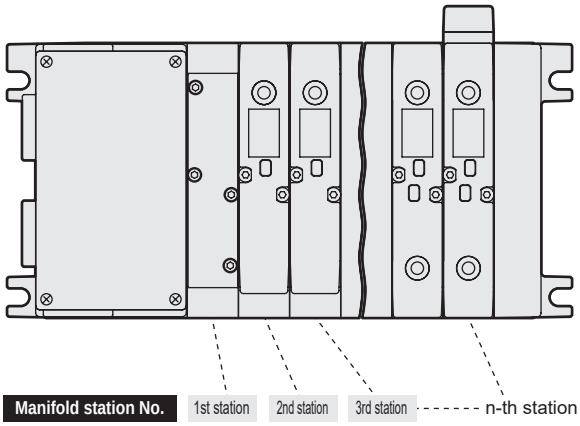

T10R (right side specifications)

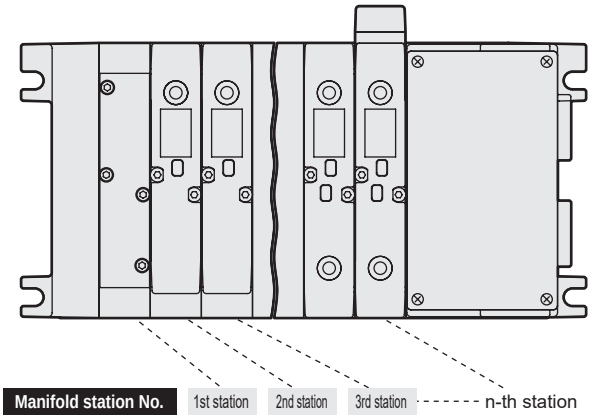

Terminal array of wiring method T10 (example)

*: The numerals of valve numbers 1a, 1b, 2a, 2b ... indicate the order of stations first station, second station... and the letters “a” and “b” indicate the “a side” solenoid and “b side” solenoid, respectively.
The manifold's max. station number differs depending on the model.
Check the specifications of each model.

Terminal No.

COM	18	17	16	15	14	13	12	11	10
9	8	7	6	5	4	3	2	1	COM

[Standard wiring]

● For single solenoid valve

(MF station No. max. 16 stations)

Term. block No.	COM	18	17	16	15	14	13	12	11	10
Valve No.	COM	(Blank)	(Blank)	16a	15a	14a	13a	12a	11a	10a
Term. block No.	9	8	7	6	5	4	3	2	1	COM
Valve No.	9a	8a	7a	6a	5a	4a	3a	2a	1a	COM

● For double solenoid valve

(MF station No. max. 8 stations)

Term. block No.	COM	18	17	16	15	14	13	12	11	10
Valve No.	COM	(Blank)	(Blank)	8b	8a	7b	7a	6b	6a	5b
Term. block No.	9	8	7	6	5	4	3	2	1	COM
Valve No.	5a	4b	4a	3b	3a	2b	2a	1b	1a	COM

● For mixed use (single/double mixture)

(Number of solenoid valves up to 16 points)

Term. block No.	COM	18	17	16	15	14	13	12	11	10
Valve No.	COM	(Blank)	(Blank)	(Blank)	(Blank)	9b	9a	8b	8a	7b
Term. block No.	9	8	7	6	5	4	3	2	1	COM
Valve No.	7a	6a	5b	5a	4b	4a	3a	2a	1a	COM

[Double wiring]

(MF station No. max. 8 stations)

Term. block No.	COM	18	17	16	15	14	13	12	11	10
Valve No.	COM	(Blank)	(Blank)	(Blank)	8a	(Blank)	7a	(Blank)	6a	(Blank)
Term. block No.	9	8	7	6	5	4	3	2	1	COM
Valve No.	5a	(Blank)	4a	(Blank)	3a	(Blank)	2a	(Blank)	1a	COM

(MF station No. max. 8 stations)

Term. block No.	COM	18	17	16	15	14	13	12	11	10
Valve No.	COM	(Blank)	(Blank)	8b	8a	7b	7a	6b	6a	5b
Term. block No.	9	8	7	6	5	4	3	2	1	COM
Valve No.	5a	4b	4a	3b	3a	2b	2a	1b	1a	COM

(Number of solenoid valves up to 16 points)

Term. block No.	COM	18	17	16	15	14	13	12	11	10
Valve No.	COM	(Blank)	(Blank)	8b	8a	7b	7a	(Blank)	6a	5b
Term. block No.	9	8	7	6	5	4	3	2	1	COM
Valve No.	5a	4b	4a	(Blank)	3a	(Blank)	2a	(Blank)	1a	COM

D-sub-connector (Wiring method T30) (Custom made. Consult with CKD.)

Notes on wiring

[T30 Connectors]

The connector used for T30 wiring, called a D-sub-connector, is used widely for FA and OA devices. The 25P in particular is also an RS-232-C Standards designated connector, used for personal computer communication. The manifold station numbers are set in order from left with the piping port facing forward.

[Precautions for connector T30]

(1) Signal arrays of the PLC output unit must match signal arrays on the valve side.
(2) The correspondence will not function if the number of solenoid stations exceeds 16. Please be aware of this.
(3) A voltage drop may occur due to simultaneous energizing or cable length. Confirm that the voltage drop for the solenoid is within 10% of the rated voltage.

Internal wiring of wiring method T30 (up to 16 solenoid stations)

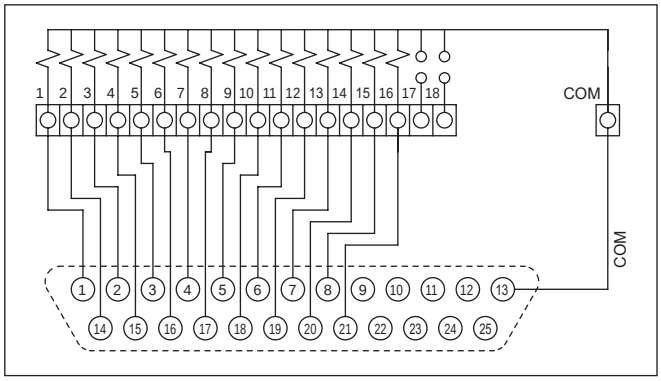

T30 (left side specifications)

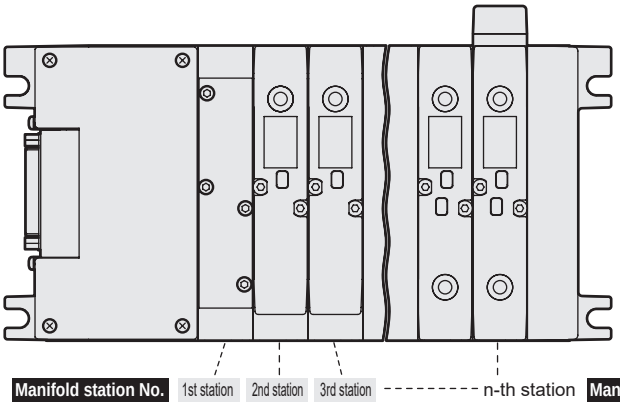

T30R (right side specifications)

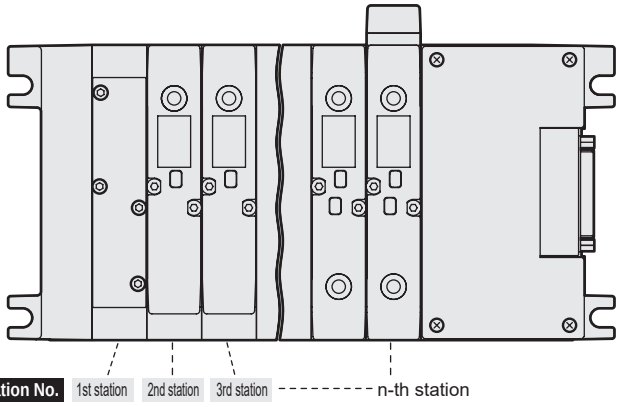

T30 connector pin array (example)

*: The numerals of valve numbers 1a, 1b, 2a, 2b ... indicate the order of stations first station, second station... and the letters “a” and “b” indicate the “a side” solenoid and “b side” solenoid, respectively. The manifold's max. station number differs depending on the model. Check the specifications of each model.

Connector pin No.

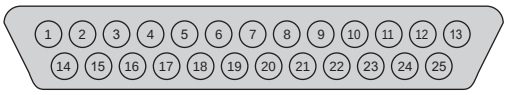

[Standard wiring]

● For single solenoid valve (MF max. station number of 16 stations)

Pin No.	1	2	3	4	5	6	7	8	9	10	11	12	13
Valve No.	1a	3a	5a	7a	9a	11a	13a	15a	(Blank)	(Blank)	(Blank)	(Blank)	COM
Pin No.	**14**	**15**	**16**	**17**	**18**	**19**	**20**	**21**	**22**	**23**	**24**	**25**	
Valve No.	2a	4a	6a	8a	10a	12a	14a	16a	(Blank)	(Blank)	(Blank)	(Blank)	

● For double solenoid valve (MF max. station number of 8 stations)

Pin No.	1	2	3	4	5	6	7	8	9	10	11	12	13
Valve No.	1a	2a	3a	4a	5a	6a	7a	8a	(Blank)	(Blank)	(Blank)	(Blank)	COM
Pin No.	**14**	**15**	**16**	**17**	**18**	**19**	**20**	**21**	**22**	**23**	**24**	**25**	
Valve No.	1b	2b	3b	4b	5b	6b	7b	8b	(Blank)	(Blank)	(Blank)	(Blank)	

● For mixed use (single/double mixture) (max. solenoid No. up to 16 points)

Pin No.	1	2	3	4	5	6	7	8	9	10	11	12	13
Valve No.	1a	3a	4a	5a	7a	8a	10a	11b	(Blank)	(Blank)	(Blank)	(Blank)	COM
Pin No.	**14**	**15**	**16**	**17**	**18**	**19**	**20**	**21**	**22**	**23**	**24**	**25**	
Valve No.	2a	3b	4b	6a	7b	9a	11a	12a	(Blank)	(Blank)	(Blank)	(Blank)	

[Double wiring]

● For single solenoid valve (MF max. station number of 8 stations)

Pin No.	1	2	3	4	5	6	7	8	9	10	11	12	13
Valve No.	1a	2a	3a	4a	5a	6a	7a	8a	(Blank)	(Blank)	(Blank)	(Blank)	COM
Pin No.	**14**	**15**	**16**	**17**	**18**	**19**	**20**	**21**	**22**	**23**	**24**	**25**	
Valve No.	(Blank)	(Blank)	(Blank)	(Blank)	(Blank)	(Blank)	(Blank)	(Blank)	(Blank)	(Blank)	(Blank)	(Blank)	

● For double solenoid valve (MF max. station number of 8 stations)

Pin No.	1	2	3	4	5	6	7	8	9	10	11	12	13
Valve No.	1a	2a	3a	4a	5a	6a	7a	8a	(Blank)	(Blank)	(Blank)	(Blank)	COM
Pin No.	**14**	**15**	**16**	**17**	**18**	**19**	**20**	**21**	**22**	**23**	**24**	**25**	
Valve No.	1b	2b	3b	4b	5b	6b	7b	8b	(Blank)	(Blank)	(Blank)	(Blank)	

● For mixed use (single/double mixture) (max. solenoid No. up to 16 points)

Pin No.	1	2	3	4	5	6	7	8	9	10	11	12	13
Valve No.	1a	2a	3a	4a	5a	6a	7a	8a	(Blank)	(Blank)	(Blank)	(Blank)	COM
Pin No.	**14**	**15**	**16**	**17**	**18**	**19**	**20**	**21**	**22**	**23**	**24**	**25**	
Valve No.	(Blank)	(Blank)	3b	4b	(Blank)	(Blank)	7b	(Blank)	(Blank)	(Blank)	(Blank)	(Blank)	

Serial transmission (Wiring method T6*)

Notes on wiring

End of production product

[Serial transmission (T6*)]

(1) The device unit's output No. differs with the manufacturer. The manifold internal connector pin No. and the manifold solenoid correspond as shown below.
(2) Internal connectors are wired in order, so there may be some blank numbers depending on the number of manifold stations. These blank outputs cannot be used to drive other than the solenoid manifold in use.
(3) The working power is 24 VDC.
(4) A device unit for each communication system is used.
For usable PLC models, host unit model numbers and communication system specifications, refer to technical data on page 1167.
(5) Station manifolds are set in order from the left with the piping port facing forward regardless of the wiring block position.
(6) For information regarding the PLC, please contact the corresponding PLC manufacturer.

T6* (left-sided specifications)

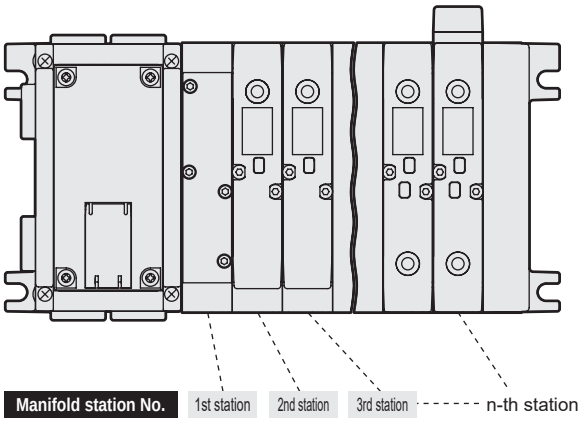

T6*R (right-sided specifications)

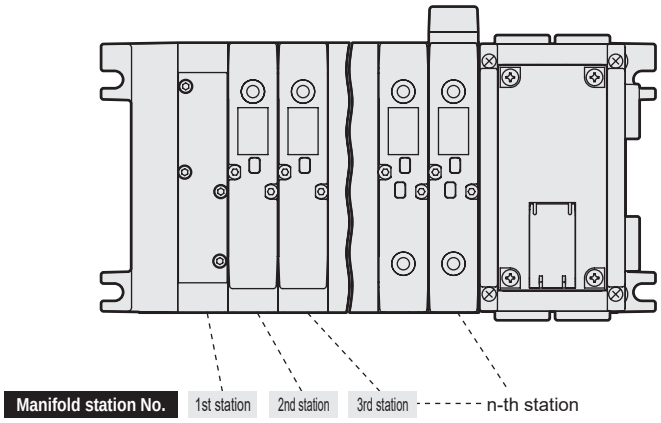

Correspondence of connector pin No. and solenoid valve

● For single solenoid valve
(Supports up to manifold max. station number of 16 stations)

Pin No.	2	4	6	8	10	12	14	16
Valve No.	2a	4a	6a	8a	10a	12a	14a	16a
Pin No.	**1**	**3**	**5**	**7**	**9**	**11**	**13**	**15**
Valve No.	1a	3a	5a	7a	9a	11a	13a	15a

● For double solenoid valve
(Supports up to manifold max. station number of 8 stations)

Pin No.	2	4	6	8	10	12	14	16
Valve No.	1b	2b	3b	4b	5b	6b	7b	8b
Pin No.	**1**	**3**	**5**	**7**	**9**	**11**	**13**	**15**
Valve No.	1a	2a	3a	4a	5a	6a	7a	8a

● For mixed use (single/double mixture)
(Supports max. No. of solenoid valves up to 16 points)

Pin No.	2	4	6	8	10	12	14	16
Valve No.	2a	4a	6a	7b	8b	9b	10b	11b
Pin No.	**1**	**3**	**5**	**7**	**9**	**11**	**13**	**15**
Valve No.	1a	3a	5a	7a	8a	9a	10a	11a

*1: The numerals of valve numbers 1a, 1b, 2a, 2b ... indicate the order of stations first station, second station... and the letters “a” and “b” indicate the “a side” solenoid and “b side” solenoid, respectively.

Correspondence of device unit output No. and connector pin No.

● T6D1, T6G1

Output No.	0	1	2	3	4	5	6	7	8	9	10	11	12	13	14	15
Connector pin No.	1	2	3	4	5	6	7	8	9	10	11	12	13	14	15	16

PLC compatibility table

Model No.	Manufacturer name (recommended organization)	Communication system name	Host unit model No.
T7EC*	EtherCAT Technology Group	EtherCAT	Connected to EtherCAT-compatible master
	OMRON Corporation		NJ101 NJ301 NJ501 CJ1W-NC□82
T7EN*	ODVA	EtherNet/IP	Connected to EtherNet/IP-compatible master
	OMRON Corporation		NJ101 NJ301 NJ501 CJ1W-EIP21 CS1W-EIP21
T7EB*	CC-Link Partner Association (CLPA)	CC-Link IEF Basic	Connected to CC-Link IEF Basic-compatible master
	Mitsubishi Electric Corporation		MELSEC-Q Series Q03UDVCPU
T7EP*	PROFIBUS & PROFINET International	PROFINET	Connected to PROFINET-compatible master
	SIEMENS Corporation		S7-1200 S7-1500
T8D*	ODVA	DeviceNet	Connected to DeviceNet-compatible master
	OMRON Corporation		CJ1W-DRM21 CS1W-DRM21-V1 C200HW-DRM21-V1 CVM1-DRM21-V1

Note: For details on master units and models not listed above, contact each PLC manufacturer.

Wiring structure between wiring block and valve block (DC specifications)

A part called a dedicated wiring connector is built into the valve block and supply and exhaust block, etc. This structure enables the wiring to be completed simultaneously with the disassembly and assembly of the block manifold. Special wiring work is not required during disassembly and assembly. There is regularity to the wiring block connector pin numbers and wired valves. Refer to the section on the wiring method of each wiring block, and connect the wires between the valves and control device. Take special care when increasing or decreasing the number of valve blocks. In addition, an example of the wiring circuit when expanding stations is shown below.

Example of wiring circuit

The diagram below shows the wiring circuit for MW4G4 and differs from the actual specifications.

Double wiring

When one station of a valve block has been expanded between the 2nd and 3rd station, the output that had been assigned to terminal block No. 5 and No. 6 of the wiring block will automatically shift for two solenoids and be assigned to terminal block No. 7 and No. 8.

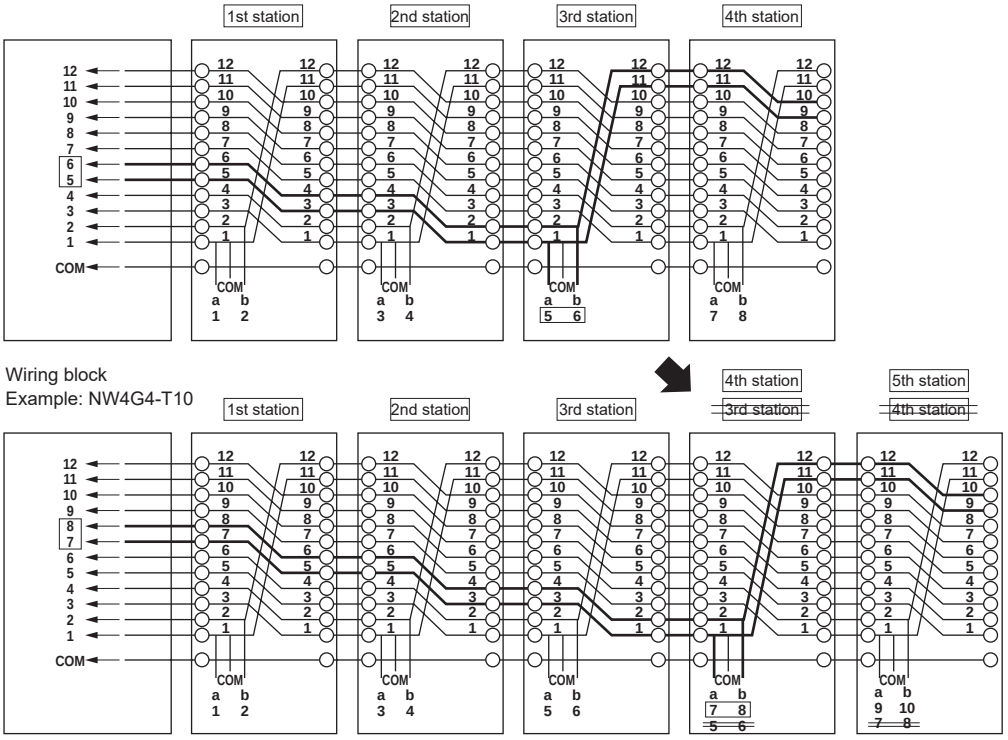

Standard wiring

Similar to double wiring, the terminal block numbers will shift assignments. However, how they shift will depend on the solenoid valve. With types having one solenoid valve (2-position single), they shift for one valve position. With types having two solenoid valves (2-position double / 3-position), they shift for two valve positions.

MEMO

Serial transmission: Wiring method

T7* serial transmission

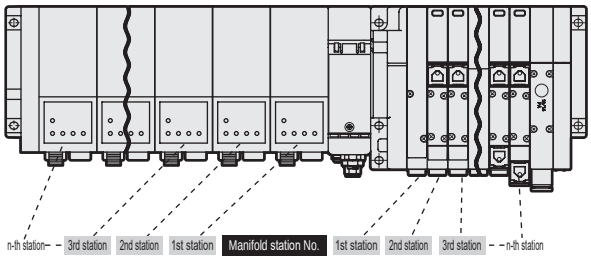

- Refer to the table below, as device unit I/O numbers differ according to PLC manufacturer.
- The device unit I/O numbers correspond to the manifold solenoids and I/O block as shown below.
- Station manifolds are set in order from the left with the piping port facing forward regardless of the wiring block position.
- The I/O block station numbers are configured in order from the serial transmission device unit side. When input blocks and output blocks are mixed, the input blocks will be placed first on the device unit side upon configuration.
- When there are input configurations, it is possible to connect with sensors by using the input block.
- When the number of solenoid points is less than the output points, it is possible to connect with external equipment by using the output block.
- The working power is 24 VDC.
- A device unit for each communication system is used. Contact CKD for usable PLC models, host unit model numbers and communication system specifications. (Refer to page 1167)
- Securely tighten each connector (power/communication). After completing the address settings, etc., close and securely tighten the switch cover. (Proper tightening torque 0.3 N·m)

Correspondence of PLC address No. and serial transmission device unit I/O No.

For hexadecimal notation

Serial transmission device unit I/O No.		0	1	2	3	4	5	6	7	8	9	10	11	12	13	14	15	16	17	18	19	20	21	22	23	24	25	26	27	28	29	30	31
Output dedicated	EtherCAT EtherNet/IP CC-Link IEF Basic PROFINET	Y00	Y01	Y02	Y03	Y04	Y05	Y06	Y07	Y08	Y09	Y0A	Y0B	Y0C	Y0D	Y0E	Y0F																
I/O mixed	EtherCAT EtherNet/IP CC-Link IEF Basic PROFINET	X00	X01	X02	X03	X04	X05	X06	X07	X08	X09	X0A	X0B	X0C	X0D	X0E	X0F	Y00	Y01	Y02	Y03	Y04	Y05	Y06	Y07	Y08	Y09	Y0A	Y0B	Y0C	Y0D	Y0E	Y0F

For decimal notation

Serial transmission device unit I/O No.		0	1	2	3	4	5	6	7	8	9	10	11	12	13	14	15	16	17	18	19	20	21	22	23	24	25	26	27	28	29	30	31
Output dedicated	EtherCAT EtherNet/IP CC-Link IEF Basic PROFINET	Y000	Y001	Y002	Y003	Y004	Y005	Y006	Y007	Y008	Y009	Y010	Y011	Y012	Y013	Y014	Y015																
I/O mixed	EtherCAT EtherNet/IP CC-Link IEF Basic PROFINET	X000	X001	X002	X003	X004	X005	X006	X007	X008	X009	X010	X011	X012	X013	X014	X015	Y000	Y001	Y002	Y003	Y004	Y005	Y006	Y007	Y008	Y009	Y010	Y011	Y012	Y013	Y014	Y015

I/O numbers corresponding to I/O No. of wiring method T7*

unit	Max. No. of inputs	Max. output points		Serial transmission device unit I/O No																													
	Number of input blocks	Number of output blocks	Number of valve SOL points	0	1	2	3	4	5	6	7	8	9	10	11	12	13	14	15	16	17	18	19	20	21	22	23	24	25	26	27	28	29	30	31
· T7*1 · T7*P1	–	–	16 points	s1	s2	s3	s4	s5	s6	s7	s8	s9	s10	s11	s12	s13	s14	s15	s16																
· T7*2 · T7*P2	–	–	32 points	s1	s2	s3	s4	s5	s6	s7	s8	s9	s10	s11	s12	s13	s14	s15	s16	s17	s18	s19	s20	s21	s22	s23	s24	s25	s26	s27	s28	s29	s30	s31	s32
· T7*B7 · T7*PB7	1 block (4 points)	–	16 points	1-0	1-1	1-2	1-3													s1	s2	s3	s4	s5	s6	s7	s8	s9	s10	s11	s12	s13	s14	s15	s16
		1 unit	12 points	1-0	1-1	1-2	1-3													s1	s2	s3	s4	s5	s6	s7	s8	s9	s10	s11	s12	2-0	2-1	2-2	2-3
		2 units	8 points	1-0	1-1	1-2	1-3													s1	s2	s3	s4	s5	s6	s7	s8	2-0	2-1	2-2	2-3	3-0	3-1	3-2	3-3
	2 blocks (8 points)	–	16 points	1-0	1-1	1-2	1-3	2-0	2-1	2-2	2-3									s1	s2	s3	s4	s5	s6	s7	s8	s9	s10	s11	s12	s13	s14	s15	s16
		1 unit	12 points	1-0	1-1	1-2	1-3	2-0	2-1	2-2	2-3									s1	s2	s3	s4	s5	s6	s7	s8	s9	s10	s11	s12	3-0	3-1	3-2	3-3
		2 units	8 points	1-0	1-1	1-2	1-3	2-0	2-1	2-2	2-3									s1	s2	s3	s4	s5	s6	s7	s8	3-0	3-1	3-2	3-3	4-0	4-1	4-2	4-3
	3 blocks (12 points)	–	16 points	1-0	1-1	1-2	1-3	2-0	2-1	2-2	2-3	3-0	3-1	3-2	3-3					s1	s2	s3	s4	s5	s6	s7	s8	s9	s10	s11	s12	s13	s14	s15	s16
		1 unit	12 points	1-0	1-1	1-2	1-3	2-0	2-1	2-2	2-3	3-0	3-1	3-2	3-3					s1	s2	s3	s4	s5	s6	s7	s8	s9	s10	s11	s12	4-0	4-1	4-2	4-3
		2 units	8 points	1-0	1-1	1-2	1-3	2-0	2-1	2-2	2-3	3-0	3-1	3-2	3-3					s1	s2	s3	s4	s5	s6	s7	s8	4-0	4-1	4-2	4-3	5-0	5-1	5-2	5-3
	4 blocks (16 points)	–	16 points	1-0	1-1	1-2	1-3	2-0	2-1	2-2	2-3	3-0	3-1	3-2	3-3	4-0	4-1	4-2	4-3	s1	s2	s3	s4	s5	s6	s7	s8	s9	s10	s11	s12	s13	s14	s15	s16
		1 unit	12 points	1-0	1-1	1-2	1-3	2-0	2-1	2-2	2-3	3-0	3-1	3-2	3-3	4-0	4-1	4-2	4-3	s1	s2	s3	s4	s5	s6	s7	s8	s9	s10	s11	s12	5-0	5-1	5-2	5-3
		2 units	8 points	1-0	1-1	1-2	1-3	2-0	2-1	2-2	2-3	3-0	3-1	3-2	3-3	4-0	4-1	4-2	4-3	s1	s2	s3	s4	s5	s6	s7	s8	5-0	5-1	5-2	5-3	6-0	6-1	6-2	6-3

: Valve SOL output

: Output block

: Input block

Valve No. layout corresponding to wiring method T7* solenoid output No. (example)

* The numerals of valve numbers 1a, 1b, 2a, 2b ... indicate the order of stations first station, second station... and the letters “a” and “b” indicate the “a side” solenoid and “b side” solenoid, respectively. The manifold’s max. station number differs depending on the model. Check the specifications of each model.

[Standard wiring] ● For single solenoid valve (Max. 16 stations)

Solenoid output No.	s1	s2	s3	s4	s5	s6	s7	s8	s9	s10	s11	s12	s13	s14	s15	s16	s17	s18	s19	s20	s21	s22	s23	s24	s25	s26	s27	s28	s29	s30	s31	s32
Valve No.	1a	2a	3a	4a	5a	6a	7a	8a	9a	10a	11a	12a	13a	14a	15a	16a																

● For double solenoid valve

Solenoid output No.	s1	s2	s3	s4	s5	s6	s7	s8	s9	s10	s11	s12	s13	s14	s15	s16	s17	s18	s19	s20	s21	s22	s23	s24	s25	s26	s27	s28	s29	s30	s31	s32
Valve No.	1a	1b	2a	2b	3a	3b	4a	4b	5a	5b	6a	6b	7a	7b	8a	8b	9a	9b	10a	10b	11a	11b	12a	12b	13a	13b	14a	14b	15a	15b	16a	16b

● For mixed use (single/double mixture) (Max. 16 stations)

Solenoid output No.	s1	s2	s3	s4	s5	s6	s7	s8	s9	s10	s11	s12	s13	s14	s15	s16	s17	s18	s19	s20	s21	s22	s23	s24	s25	s26	s27	s28	s29	s30	s31	s32
Valve No.	1a	2a	3a	3b	4a	4b	5a	6a	7a	7b	8a	9a	10a	10b	11a	11b	12a	13a	14a	14b	15a	15b	16a									

[Double wiring] ● For single solenoid valve

Solenoid output No.	s1	s2	s3	s4	s5	s6	s7	s8	s9	s10	s11	s12	s13	s14	s15	s16	s17	s18	s19	s20	s21	s22	s23	s24	s25	s26	s27	s28	s29	s30	s31	s32
Valve No.	1a	(Blank)	2a	(Blank)	3a	(Blank)	4a	(Blank)	5a	(Blank)	6a	(Blank)	7a	(Blank)	8a	(Blank)	9a	(Blank)	10a	(Blank)	11a	(Blank)	12a	(Blank)	13a	(Blank)	14a	(Blank)	15a	(Blank)	16a	(Blank)

● For double solenoid valve

Solenoid output No.	s1	s2	s3	s4	s5	s6	s7	s8	s9	s10	s11	s12	s13	s14	s15	s16	s17	s18	s19	s20	s21	s22	s23	s24	s25	s26	s27	s28	s29	s30	s31	s32
Valve No.	1a	1b	2a	2b	3a	3b	4a	4b	5a	5b	6a	6b	7a	7b	8a	8b	9a	9b	10a	10b	11a	11b	12a	12b	13a	13b	14a	14b	15a	15b	16a	16b

● For mixed use (single/double mixture)

Solenoid output No.	s1	s2	s3	s4	s5	s6	s7	s8	s9	s10	s11	s12	s13	s14	s15	s16	s17	s18	s19	s20	s21	s22	s23	s24	s25	s26	s27	s28	s29	s30	s31	s32
Valve No.	1a	(Blank)	2a	(Blank)	3a	3b	4a	4b	5a	(Blank)	6a	(Blank)	7a	7b	8a	(Blank)	9a	(Blank)	10a	(Blank)	11a	11b	12a	12b	13a	(Blank)	14a	(Blank)	15a	15b	16a	(Blank)

Model No.	LED display	Wiring method

T7EC*

RUN ☐
ERR ☐
L/A IN ☐
L/A OUT ☐
INFO ☐
PW ☐
PW(V) ☐

LED name	Display description
RUN	Communication status of EtherCAT is indicated by the LED (green) state (OFF/ON/blinking) (Green lamp is ON during normal communication)
ERR	Abnormal status of EtherCAT is indicated by the LED (red) state (OFF/ON/blinking) (lamp is OFF during normal communication)
L/A IN	Status of the Ethernet port (IN side) is indicated by the LED (green) state (OFF/ON/rapid blinking)
L/A OUT	Status of the Ethernet port (OUT side) is indicated by the LED (green) state (OFF/ON/rapid blinking)
INFO	Error status of the device unit is indicated by the LED (red) (OFF during normal communication)
PW	Lights when unit power is ON. Green lamp is ON when normal
PW(V)	Lights when valve power is ON. Green lamp is ON when normal (Cannot be monitored when the unit power is not turned ON)

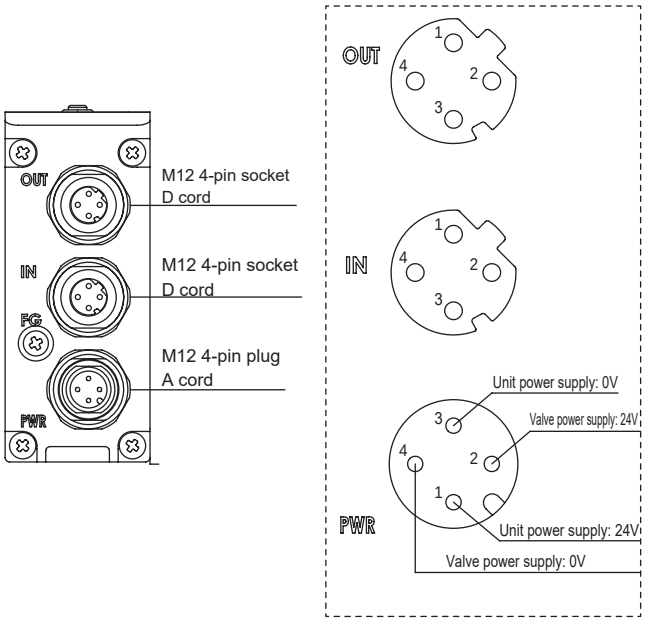

Communication connector pin array

M12 pins		Signal name	Function
OUT	1	TD+	Transmitted data, positive
	2	RD+	Received data, positive
	3	TD-	Transmitted data, negative
	4	RD-	Received data, negative
IN	1	TD+	Transmitted data, positive
	2	RD+	Received data, positive
	3	TD-	Transmitted data, negative
	4	RD-	Received data, negative

- The unit power supply (communication power supply) and the valve power supply are separate power supplies.
  Supply power from the power supply connector (24 VDC). (Use M12 connector)
- Connect the EtherCAT cable to the communication connector (IN).
  (use M12 connector)
- Prepare a connector to be used on the wiring end.

T7EN*

MS ☐
NS ☐
L/A IN ☐
L/A OUT ☐
ST ☐
PW(V) ☐

LED name	Display description
MS	Status of device unit related to EtherNet/IP indicated by LED color (green/red) and ON status (ON/blinking)
NS	Status of network related to EtherNet/IP indicated by LED color (green/red) and ON status (ON/blinking)
L/A IN	Status of Ethernet port (IN side) indicated by LED color (green/yellow)
L/A OUT	Status of Ethernet port (OUT side) indicated by LED color (green/yellow)
ST	Status of device unit indicated by LED color (green/yellow) and ON status (ON/blinking)
PW(V)	Indicates valve power supply power status. Green lamp ON when powered ON (Cannot be monitored when unit power is not turned ON)

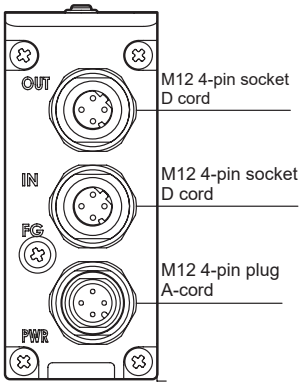

Communication connector pin array

Port	Pin	Signal name	Function
IN OUT	1	TD+	Transmitted data, positive
	2	RD+	Received data, positive
	3	TD-	Transmitted data, negative
	4	RD-	Received data, negative

Model No.	LED display	Wiring method

T7EB*

RUN ☐
ERR ☐
L/A IN ☐
L/A OUT ☐
INFO ☐
PW ☐
PW(V) ☐

LED name	Display description
RUN	Status of CC-Link IEF Basic communication indicated by LED ON status (ON/blinking)
ERR	Status of CC-Link IEF Basic abnormal communication indicated by LED ON status (ON/blinking)
L/A IN	Status of Ethernet port (IN side) indicated by ON LED status (ON/blinking)
L/A OUT	Status of Ethernet port (OUT side) indicated by LED ON status (ON/blinking)
INFO	Status of device unit indicated by LED ON status (ON/blinking)
PW	Indicates unit power supply power status. Green lamp ON when powered ON
PW(V)	Indicates valve power supply power status. Green lamp ON when powered ON (Cannot be monitored when unit power is not turned ON)

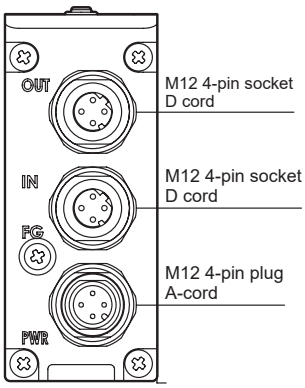

Communication connector pin array

Port	Pin	Signal name	Function
IN OUT	1	TD+	Transmitted data, positive
	2	RD+	Received data, positive
	3	TD-	Transmitted data, negative
	4	RD-	Received data, negative

T7EP*

RUN ☐
ERR ☐
L/A IN ☐
L/A OUT ☐
INFO ☐
PW ☐
PW(V) ☐

LED name	Display description
RUN	Communication status of PROFINET indicated by LED ON status (ON/blinking)
ERR	Abnormal communication status of PROFINET indicated by LED ON status (ON/blinking)
L/A IN	Status of Ethernet port (IN side) indicated by ON LED status (ON/blinking)
L/A OUT	Status of Ethernet port (OUT side) indicated by LED ON status (ON/blinking)
INFO	Status of device unit indicated by LED ON status (ON/blinking)
PW	Indicates unit power supply power status. Green lamp ON when powered ON
PW(V)	Indicates valve power supply power status. Green lamp ON when powered ON (Cannot be monitored when unit power is not turned ON)

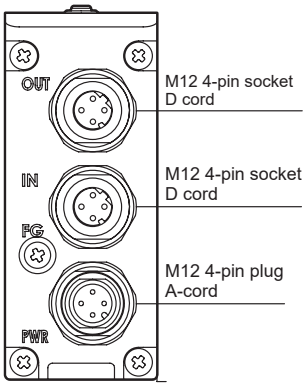

Communication connector pin array

Port	Pin	Signal name	Function
IN OUT	1	TD+	Transmitted data, positive
	2	RD+	Received data, positive
	3	TD-	Transmitted data, negative
	4	RD-	Received data, negative

Waterproof connector

For EtherCAT

● For EtherCAT connector

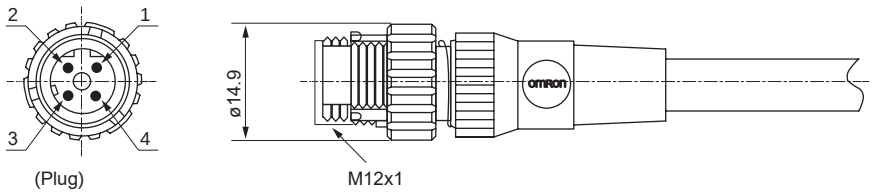

Pin No.	Signal name	Function
1	TD+	Transmitted data, positive
2	RD+	Received data, positive
3	TD-	Transmitted data, negative
4	RD-	Received data, negative

For wiring method, refer to the following communication connector pin layout and communication cable wiring example.
Use CAT5 or higher for communication cable lines.

Recommended M12-RJ45 communication cable with connector
- · Type XS5W-T421-□MC-K Straight OMRON
- · No. 0945 700 50□□ Straight HARTING

Recommended communication plug and cable
- · No. 0945 600 01□□ Cable single unit HARTING
- · No. 2103, 281, 1405 Assembly M12 connector HARTING
- · No. 0945, 151, 1100 Assembly RJ-45 connector HARTING

● Connector for power supply

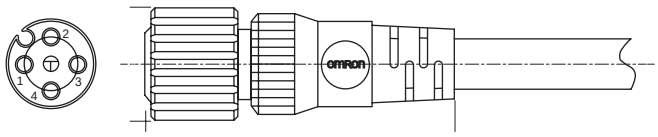

Pin No.	Description
1	Unit power supply + side (24 VDC)
2	Valve power supply + side
3	Unit power supply - side (0 V)
4	Valve power supply - side

Recommended M12 loose wire power cable
- ·Type XS2F-D421-□8□-□ Straight OMRON

Recommended communication plug and power cable
- · No. 2103 212 2305 Assembly M12 connector HARTING
- ·Electric wire size: AWG22-18, Applicable cable diameter: ø6 to 8

* □ differs depending on the cable specifications.

Connection method

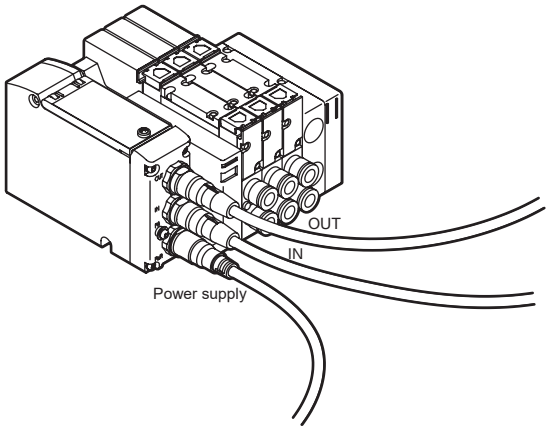

Exploded view of block manifold

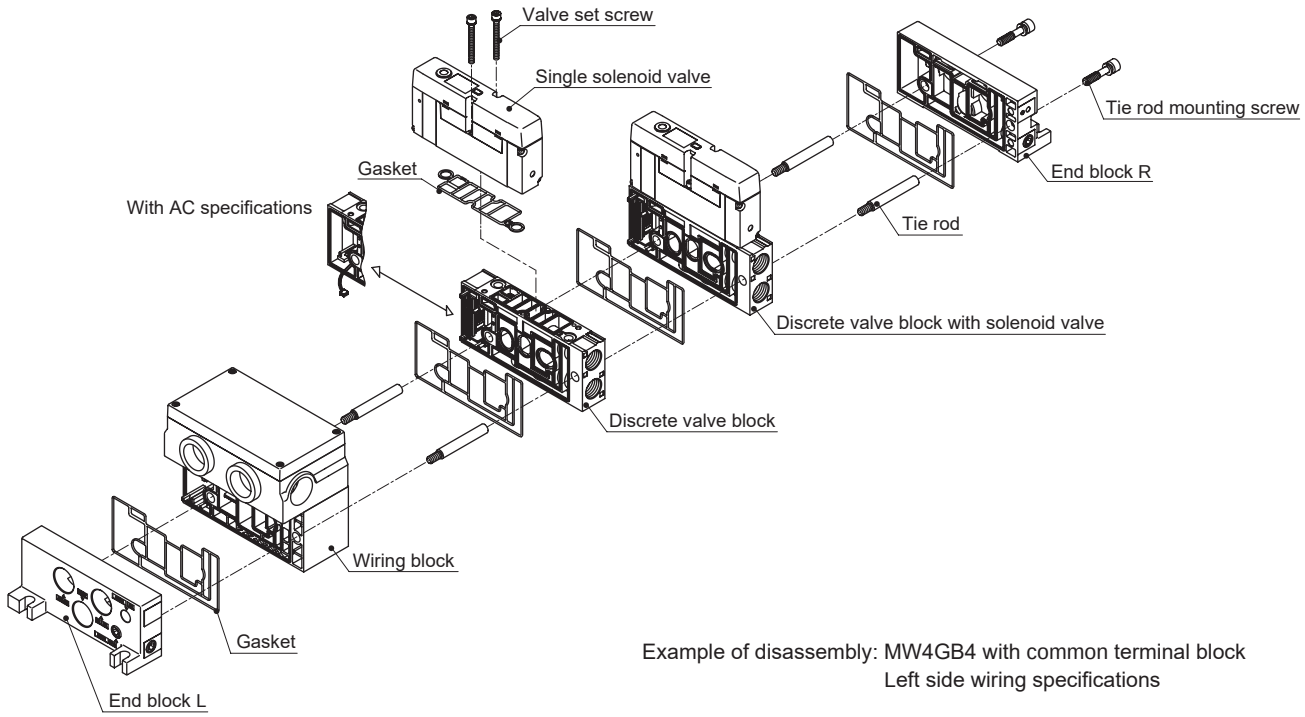

Example of disassembly: MW4GB4 with common terminal block
Left side wiring specifications

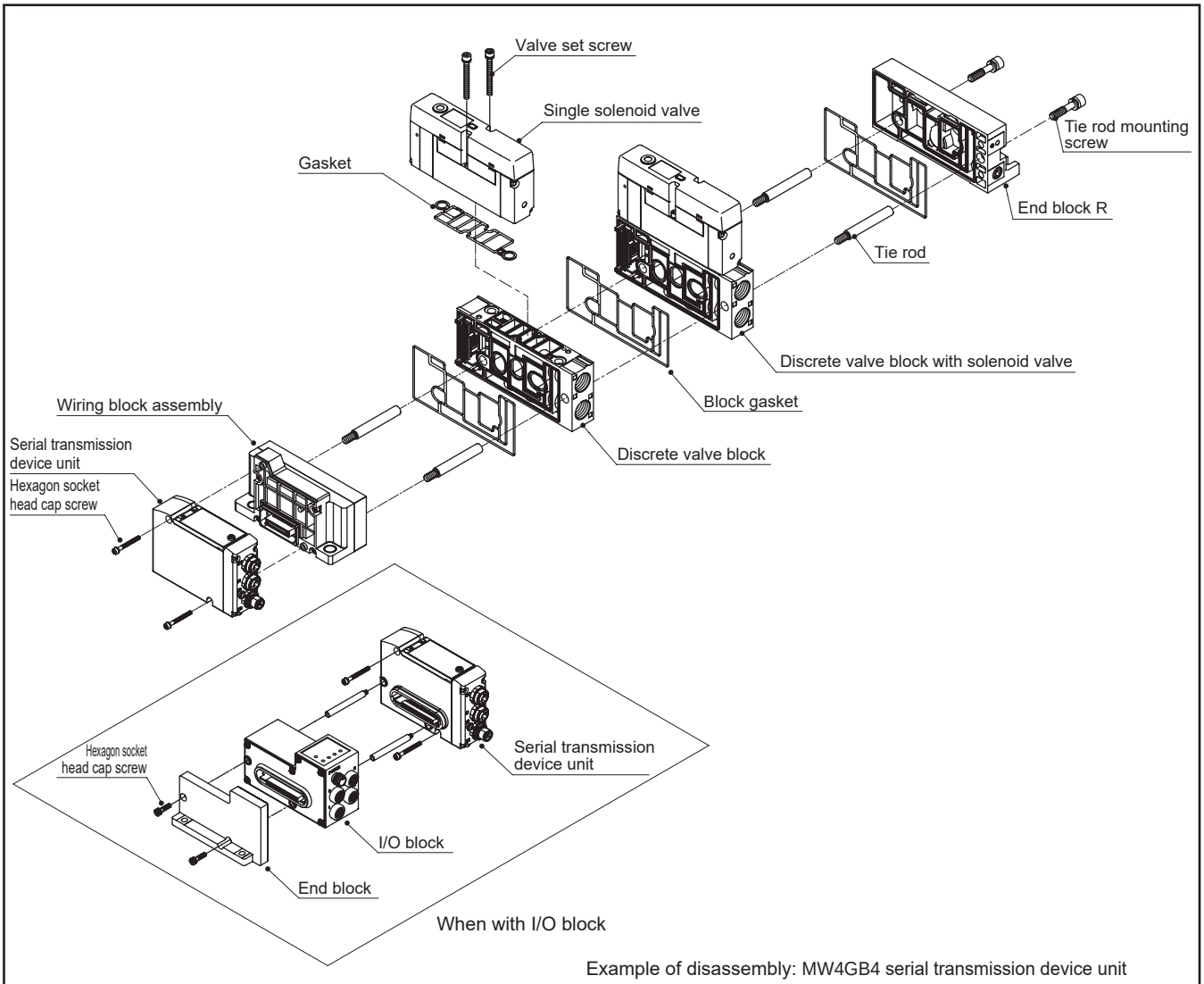

Example of disassembly: MW4GB4 serial transmission device unit
For T7*

Removing the wiring cover

T10/T10R

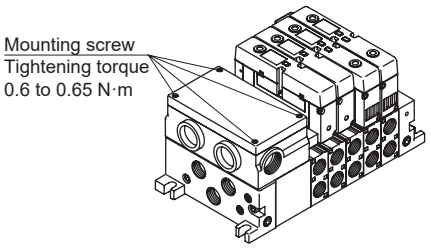

T30/T30R

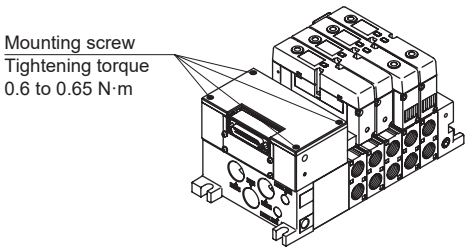

T7*

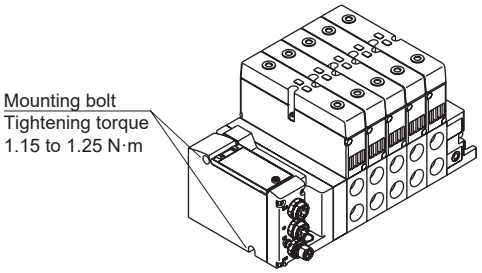

Increasing the valve blocks

(1) Remove the tie rod set screws.
(2) Remove the blocks up to the unit increase location.
(3) Install a tie rod for the units being increased.
(4) Mount the valve block to be added.
(5) Press so that there is no gap between blocks, and fasten with the hexagon socket head cap screw. (Tightening torque: 7.0 to 8.0N·m)

Replacing valves

Removing method

(1) Loosen the mounting screws (2 positions).
(2) Remove the valve from the valve block.

Installation method

Follow the removal procedure in reverse.
Refer to the table below for the recommended tightening torque for the mounting screws.

Recommended tightening torque for the valve set screw

	Size	Recommended tightening torque (N·m)
W4G4	M4	2.4 to 2.6

MEMO

Instructions for connecting T10 wiring base (standard wiring)

The correspondence rules for connector and valve on the wiring base vary depending on the reduced wiring specifications (T10). For connector wiring, check the connector No. printed on the base. For wiring of mix (consolidation), the manifold configuration as shown in the figure below is indicated as an example.

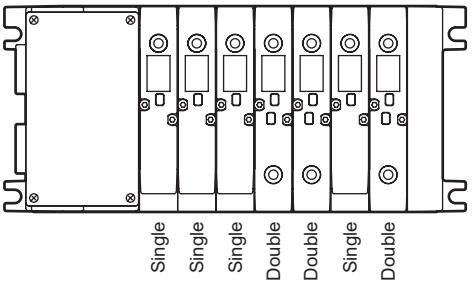

Instructions for connecting T10 wiring base (double wiring)

The double wiring specifications correspond to the wiring of the double solenoid, regardless of the switching position classification of the solenoid valve to be mounted. The standard wiring and the double SOL only of double wiring have the same wiring.

T10

Wiring base assembly

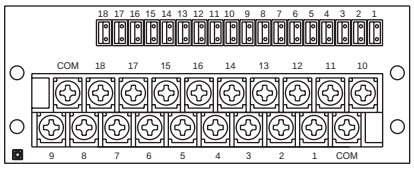

Wire in the order shown by the arrow

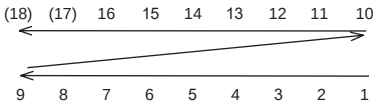

Correspondence to valve

1) For single SOL
(MF station No. max. 16 stations)

Connector No.	COM	18	17	16	15	14	13	12	11	10
Valve No.	COM	(Blank)	(Blank)	16a	15a	14a	13a	12a	11a	10a
Connector No.	**9**	**8**	**7**	**6**	**5**	**4**	**3**	**2**	**1**	**COM**
Valve No.	9a	8a	7a	6a	5a	4a	3a	2a	1a	COM

2) For double SOL
(MF station No. max. 8 stations)

Connector No.	COM	18	17	16	15	14	13	12	11	10
Valve No.	COM	(Blank)	(Blank)	8b	8a	7b	7a	6b	6a	5b
Connector No.	**9**	**8**	**7**	**6**	**5**	**4**	**3**	**2**	**1**	**COM**
Valve No.	5a	4b	4a	3b	3a	2b	2a	1b	1a	COM

3) For mix (consolidation)
(Number of solenoid valves up to 16 points)

Connector No.	COM	18	17	16	15	14	13	12	11	10
Valve No.	COM	(Blank)	(Blank)	(Blank)	(Blank)	(Blank)	(Blank)	(Blank)	(Blank)	7b
Connector No.	**9**	**8**	**7**	**6**	**5**	**4**	**3**	**2**	**1**	**COM**
Valve No.	7a	6a	5b	5a	4b	4a	3a	2a	1a	COM

T10

Wiring base assembly

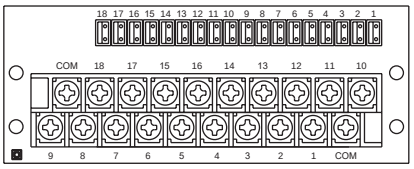

Wire in the order shown by the arrow

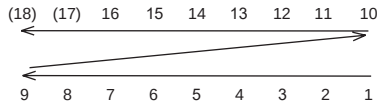

Correspondence to valve

1) For single SOL
(MF station No. max. 8 stations)

Connector No.	COM	18	17	16	15	14	13	12	11	10
Valve No.	COM	(Blank)	(Blank)	(Blank)	8a	(Blank)	7a	(Blank)	6a	(Blank)
Connector No.	**9**	**8**	**7**	**6**	**5**	**4**	**3**	**2**	**1**	**COM**
Valve No.	5a	(Blank)	4a	(Blank)	3a	(Blank)	2a	(Blank)	1a	COM

2) For double SOL
(MF station No. max. 8 stations)

Connector No.	COM	18	17	16	15	14	13	12	11	10
Valve No.	COM	(Blank)	(Blank)	8b	8a	7b	7a	6b	6a	5b
Connector No.	**9**	**8**	**7**	**6**	**5**	**4**	**3**	**2**	**1**	**COM**
Valve No.	5a	4b	4a	3b	3a	2b	2a	1b	1a	COM

3) For mix (consolidation)
(Number of solenoid valves up to 16 points)

Connector No.	COM	18	17	16	15	14	13	12	11	10
Valve No.	COM	(Blank)	(Blank)	(Blank)	(Blank)	7b	7a	(Blank)	6a	5b
Connector No.	**9**	**8**	**7**	**6**	**5**	**4**	**3**	**2**	**1**	**COM**
Valve No.	5a	4b	4a	(Blank)	3a	(Blank)	2a	(Blank)	1a	COM

*1 Expansion wiring will be necessary only in the case of AC specifications.
*2 With AC, when a change of specifications is expected, use the masking plate equipped valve block as a spare block.

How to expand reduced wiring manifold (Custom made. Consult with CKD.)

Instructions for connecting T30 wiring base (standard wiring)

The correspondence rules for connector and valve on the wiring base vary depending on the reduced wiring specifications (T30). For connector wiring, check the connector No. printed on the base. For wiring of mix (consolidation), the manifold configuration as shown in the figure below is indicated as an example.

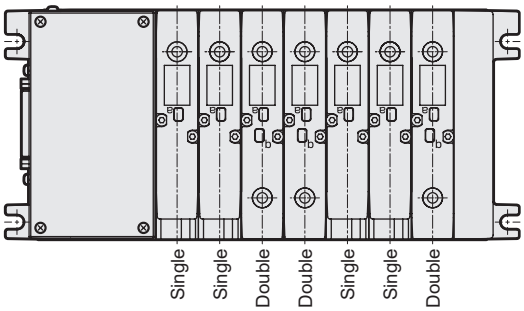

Instructions for connecting T30 wiring base (double wiring)

The double wiring specifications correspond to the wiring of the double solenoid, regardless of the switching position classification of the solenoid valve to be mounted. The standard wiring and the double SOL only of double wiring have the same wiring.

T30

Wiring base assembly

Wire in the order shown by the arrow

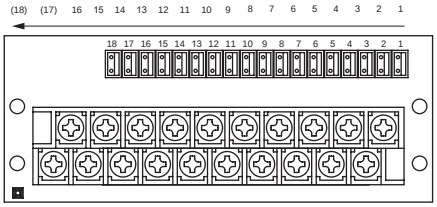

Correspondence to valve

1) For single solenoid valve
(MF max. station number 16 stations)

Connector No.	18	17	16	15	14	13	12	11	10
Valve No.	(Blank)	(Blank)	16a	15a	14a	13a	12a	11a	10a
Connector No.	9	8	7	6	5	4	3	2	1
Valve No.	9a	8a	7a	6a	5a	4a	3a	2a	1a

2) For double solenoid valve
(MF max. station number 8 stations)

Connector No.	18	17	16	15	14	13	12	11	10
Valve No.	(Blank)	(Blank)	8b	8a	7b	7a	6b	6a	5b
Connector No.	9	8	7	6	5	4	3	2	1
Valve No.	5a	4b	4a	3b	3a	2b	2a	1b	1a

3) For mixed use (single/double mixture)
(Number of solenoid valves up to 16 points)

Connector No.	18	17	16	15	14	13	12	11	10
Valve No.	(Blank)	(Blank)	(Blank)	(Blank)	(Blank)	(Blank)	(Blank)	(Blank)	7b
Connector No.	9	8	7	6	5	4	3	2	1
Valve No.	7a	6a	5a	4b	4a	3b	3a	2a	1a

T30

Wiring base assembly

Wire in the order shown by the arrow

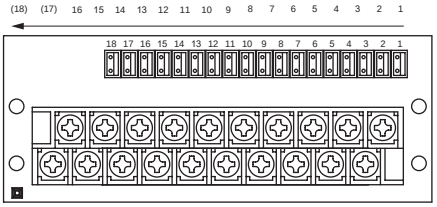

Correspondence to valve

1) For single solenoid valve
(MF max. station number 8 stations)

Connector No.	18	17	16	15	14	13	12	11	10
Valve No.	(Blank)	(Blank)	(Blank)	8a	(Blank)	7a	(Blank)	6a	(Blank)
Connector No.	9	8	7	6	5	4	3	2	1
Valve No.	5a	(Blank)	4a	(Blank)	3a	(Blank)	2a	(Blank)	1a

2) For double solenoid valve
(MF max. station number 8 stations)

Connector No.	18	17	16	15	14	13	12	11	10
Valve No.	(Blank)	(Blank)	8b	8a	7b	7a	6b	6a	5b
Connector No.	9	8	7	6	5	4	3	2	1
Valve No.	5a	4b	4a	3b	3a	2b	2a	1b	1a

3) For mixed use (single/double mixture)
(Number of solenoid valves up to 16 points)

Connector No.	18	17	16	15	14	13	12	11	10
Valve No.	(Blank)	(Blank)	(Blank)	(Blank)	7b	7a	(Blank)	6a	(Blank)
Connector No.	9	8	7	6	5	4	3	2	1
Valve No.	5a	4b	4a	3b	3a	(Blank)	2a	(Blank)	1a

*1 Expansion wiring will be necessary only in the case of AC specifications.
*2 With AC, when a change of specifications is expected, use the masking plate equipped valve block as a spare block.

MW4G4 Series

How to fill out manifold specifications sheet

● Manifold model No. (example)

Solenoid position 2 types or more | Port size Rc3/8 | Common terminal block left-sided specifications

MW 4 GB4 8 0- 10 - T10 W M - 6 - 3

Ⓐ Model No. Ⓑ Solenoid position Ⓒ Port size Ⓓ Wiring method Ⓔ Terminal/connector pin array Ⓕ Option Ⓖ Station No. Ⓗ Voltage

When filling in this field, select the model No. from Block configurations (pages 1146 to 1156), pages 1125, 1131, 1132.

Part name		Model No.	Installation position 1	2	3	4	5	6	7	8	9	10	11	12	13	14	15	16	Quantity
	End block (page 1149)	NW4G4-E L	○																1
		NW4G4-E R									○								1
	Wiring block (page 1153)	NW4G4-T 10		○															1
	Valve block with solenoid valve (pages 1125, 1131, 1132)	NW4GB4 1 0- 10 - -			○														1
		NW4GB4 2 0- 10 - -				○	○	○	○										4
		NW4GB4 3 0- 10 - -								○									1
		NW4GB4 0- - - -																	
		NW4GB4 0- - - -																	
	Valve block with masking plate (page 1148)	NW4GB4-MP - - -																	
		NW4GB4-MP - - -																	
	Partition block (page 1150)	NW4G4-SA-																	
Spacer (page 1156)	Independent supply spacer	W4G4-P-																	
	Independent exhaust spacer	W4G4-R-																	
	Spacer regulator (Custom order)	W4G4-SR-																	
Others	Partition plug (page 1155)	M4TB3-NCP																	
		M4TB3-NCR																	2x
Attached product	Silencer (resin)	SLW-15A	List the number of units to be used in the quantity field on the right.																
	Blanking plug	GWP8-B																	
		GWP10-B																	
		GWP12-B																	
	Cable clamp (page 1155)	W4G-																	

Preparing manifold specifications sheet

- Complete from the left end, with the piping port facing forward, regardless of the wiring block method.
  (Write the block model numbers and positions you determined referring to the block configurations (pages 1146 to 1156).)
- Write the total number of blocks specified in the required quantity field at the table far right.
- Mark a circle for attached products that are required.
- As there are manifold specifications sheet for each of the various series, fill in the form for the corresponding specifications.

  MW4GB4 (Base side piping) .....Page 1182
  MW4GZ4 (Base bottom piping) .....Page 1183
- Multiple stacked assemblies of spacers are available as custom order.
  Contact CKD to place an order.

How to fill out the wiring specifications sheet (T10 AC specifications only)

This is not required with standard wiring/double wiring.

● Wiring specifications sheet (example)

*The following example has been filled out in accordance with the manifold specifications sheet on the previous page.

Connector pin or terminal block No.	Valve No.															
T10	1	2	3	4	5	6	7	8	9	10	11	12	13	14	15	16
1		a														
2		b														
3	a															
4																
5			a													
6			b													
7				a												
8				b												
9					a											
10					b											
11						a										
12						b										
13																
14																
15																
16																
COM																
COM																

● Notes on wiring specifications sheet

(1) Fill in and attach to the manifold specifications sheet for anything other than the standard wiring or double wiring.
Consult with CKD, as products will be made to order in this case.

(2) The valve No. is determined by counting the valve blocks only in order from the left with the ports facing forward.
Note that this differs from the installation position numbers.

(3) The valve block with masking plate is wired in advance.
"-MPS" will be wired on only the a side while "-MPD" will be wired on the a and b sides.

(4) Double solenoids or 3-position solenoid valves cannot be assembled to "-MPS".
Order valve block with solenoid valve and carry out expansion.
Refer to page 1176 for instructions on how to expand stations.

(5) It is not possible to install spare wires for station expansion only in advance. Install a valve block with a masking plate.

Reference circuit diagram

The circuit diagram of the manifold model No. (example) on the previous page is as shown below.

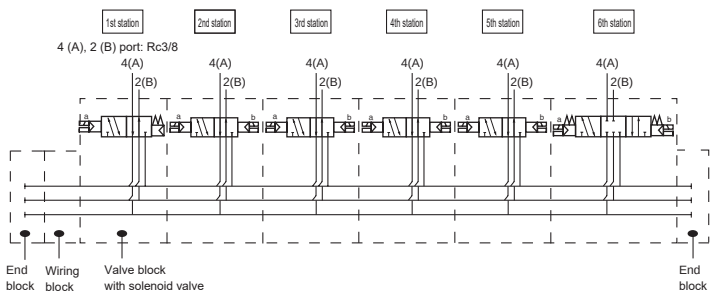

- ⌜ ⌝ indicates each block configuration.
- The manifold station numbers are set in order from the left with the piping port facing forward. (* The wiring blocks and end block are not included in the manifold station No.)
- Select a model No. from the block configurations (pages 1146 to 1156) and individual wiring, reduced wiring manifolds (pages 1125, 1131, 1132).
- With piping port facing front, arrangement positions are set in order from the left.

MW4GB4 Block manifold specifications sheet

● Contact ● Quantity Set ● Delivery date /

Slip No.	Order No.

Issued / /

Company

Contact

Order No.

● Manifold model No.

MW4GB4 [ ] 0- [ ] - [ ] [ ] [ ] - [ ] - [ ]

Ⓐ Model No. Ⓑ Solenoid position Ⓒ Port size Ⓓ Wiring method Ⓕ Option Ⓖ Station No. Ⓗ Voltage

Ⓔ Terminal/connector pin array

· When filling in this field, select the model No. from Block configurations (pages 1146 to 1156), pages 1125, 1131, 1132.

Part name		Model No.	Installation position 1	2	3	4	5	6	7	8	9	10	11	12	13	14	15	16	Quantity
	End block (page 1149)	NW4G4-E [ ]																	
		NW4G4-E [ ]																	
	Wiring block (page 1153)	NW4G4-T [ ]																	
	Valve block with solenoid valve (pages 1125, 1131, 1132)	NW4GB4 [ ] 0- [ ] - [ ] - [ ]																	
		NW4GB4 [ ] 0- [ ] - [ ] - [ ]																	
		NW4GB4 [ ] 0- [ ] - [ ] - [ ]																	
		NW4GB4 [ ] 0- [ ] - [ ] - [ ]																	
		NW4GB4 [ ] 0- [ ] - [ ] - [ ]																	
	Valve block with masking plate (page 1148)	NW4GB4-MP [ ] - [ ] - [ ]																	
		NW4GB4-MP [ ] - [ ] - [ ]																	
	Partition block (page 1150)	NW4G4-SA- [ ]																	
Spacer (page 1156)	Independent supply spacer	W4G4-P- [ ]																	
	Independent exhaust spacer	W4G4-R- [ ]																	
	Spacer regulator (custom order)	W4G4-SR- [ ]																	
Others	Partition plug (page 1155)	M4TB3-NCP																	
		M4TB3-NCR																	2x
Attached product	Silencer (resin)	SLW-15A	List the number of units to be used in the quantity field on the right.																
	Blanking plug	GWP8-B																	
		GWP10-B																	
		GWP12-B																	
	Cable clamp (page 1155)	W4G- [ ]																	

● Wiring specification sheet (Not required for standard wiring and double wiring.)

Connector pin or terminal block No.	Valve No.															
T10	1	2	3	4	5	6	7	8	9	10	11	12	13	14	15	16
1																
2																
3																
4																
5																
6																
7																
8																
9																
10																
11																
12																
13																
14																
15																
16																
COM																
COM																

1: Refer to page 1184 for T7 manifold specifications sheet.

MW4GZ4 Block manifold specifications sheet

● Contact ● Quantity Set ● Delivery date /

Slip No.	Order No.

Issued / /

Company

Contact

Order No.

● Manifold model No.

MW4GZ4 [ ] **0-** [ ] **-** [ ] [ ] [ ] **-** [ ] **-** [ ]

Ⓐ Model No. Ⓑ Solenoid position Ⓒ Port size Ⓓ Wiring method Ⓕ Option Ⓖ Station No. Ⓗ Voltage

Ⓔ Terminal/connector pin array

· When filling in this field, select the model No. from Block configurations (pages 1146 to 1156), pages 1125, 1131, 1132.

Part name		Model No.	Installation position 1	2	3	4	5	6	7	8	9	10	11	12	13	14	15	16	Quantity
	End block (page 1149)	NW4G4-E [ ]																	
		NW4G4-E [ ]																	
	Wiring block (page 1153)	NW4G4-T [ ]																	
	Valve block with solenoid valve (pages 1125, 1131, 1132)	NW4GZ4 [ ] 0- [ ] - [ ] - [ ]																	
		NW4GZ4 [ ] 0- [ ] - [ ] - [ ]																	
		NW4GZ4 [ ] 0- [ ] - [ ] - [ ]																	
		NW4GZ4 [ ] 0- [ ] - [ ] - [ ]																	
		NW4GZ4 [ ] 0- [ ] - [ ] - [ ]																	
	Valve block with masking plate (page 1148)	NW4GZ4-MP [ ] - [ ] - [ ]																	
		NW4GZ4-MP [ ] - [ ] - [ ]																	
	Partition block (page 1150)	NW4G4-SA- [ ]																	
Spacer(page 1156)	Independent supply spacer	W4G4-P- [ ]																	
	Independent exhaust spacer	W4G4-R- [ ]																	
	Spacer regulator (custom order)	W4G4-SR- [ ]																	
Others	Partition plug (page 1155)	M4TB3-NCP																	
		M4TB3-NCR																	2x
Attached product	Silencer (resin)	SLW-15A	List the number of units to be used in the quantity field on the right.																
	Blanking plug	GWP8-B																	
		GWP10-B																	
		GWP12-B																	
	Cable clamp (page 1155)	W4G- [ ]																	

● Wiring specification sheet (Not required for standard wiring and double wiring.)

Connector pin or terminal block No.	Valve No.															
T10	1	2	3	4	5	6	7	8	9	10	11	12	13	14	15	16
1																
2																
3																
4																
5																
6																
7																
8																
9																
10																
11																
12																
13																
14																
15																
16																
COM																
COM																

1: Refer to page 1184 for T7 manifold specifications sheet.

MW4G4□Block manifold specifications sheet (for T7*)

● Contact ● Quantity Set ● Delivery date /

Slip No.	Order No.

Issued / /

Company

Contact

Order No.

● Manifold model No.

MW4G□4□0-□-□□-□-□

Ⓐ Model No. Ⓑ Solenoid position Ⓒ Port size Ⓓ Wiring method Note Ⓔ Terminal/ connector pin array Ⓕ Option Ⓖ Station No. Ⓗ Voltage

Note: There is no right side (R) specification.

When filling in this field, select the model No. from Block configurations (pages 1146 to 1156), pages 1125, 1131, 1132.

Part name		Model No.	Installation position 1	2	3	4	5	6	7	8	9	10	11	12	13	14	15	16	17	18	19	20	21	22	Quantity
	End block	**NW4G4-E□□R□**																							
	I/O block	**NW4GB2-IN-□□-□**																							
		NW4GB2-OUT-□□-B																							
	Wiring block	**NW4G4-T7□□□□□**																							
	Valve block with solenoid valve	**NW4G□4□0-□□-□□-□□**																							
		NW4G□4□0-□□-□□-□□																							
		NW4G□4□0-□□-□□-□□																							
		NW4G□4□0-□□-□□-□□																							
		NW4G□4□0-□□-□□-□□																							
	Valve block with masking plate	**NW4G□4-MP□□-□□-□□**																							
		NW4G□4-MP□□-□□-□□																							
Spacer	Independent supply spacer	**W4G4-P-□□**																							
Spacer	Independent exhaust spacer	**W4G4-R-□□**																							
Attached product	Silencer (resin)	**SLW-15A**	List the number of units to be used in the quantity field on the right.																						
Attached product	Blanking plug	**GWP8-B**																							
Attached product		**GWP10-B**																							
Attached product		**GWP12-B**																							

* I/O block is side wiring only. Refer to page 1154 for the model No. of I/O block.
* As one side is for air supply and one side is for exhaust, use the supply spacer or exhaust spacer when operating valves simultaneously.
* As one side is for air supply and one side is for exhaust, partition block and partition plug cannot be used.

MEMO

Safety Precautions

Be sure to read this section before use.
Refer to Intro Page 59 for general precautions for using valves.

Product-specific cautions: Pilot operated 5-port valve W4G4 Series

Design/selection

1. Working environment

⚠ CAUTION

IP65 (IEC60529 [IEC529:1989-11]) standards are applied to the test. Avoid use in conditions where water or coolant directly contacts the valve.

Explanation of IP65 protection characteristic codes and test method

● Degree of protection

Note: IP65 is based on the following testing method.

■ IEC (International Electrotechnical Commission) standards (IEC60529 [IEC529:1989-11])

IP - □ □

Protection characteristic codes (International Protection)

1st characteristic No. (degree of protection for foreign solid matter)

Grade	Degree of protection	
6	Dust proof 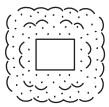	No inflow of dust

2nd characteristic No. (degree of protection for water entry)

Grade	Degree of protection		Overview of test method (fresh water is used)
5	Protection against water jets 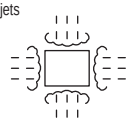	No harmful effects occur even when water is sprayed with nozzles from all directions.	The sample (exterior) is exposed to water jetting of 1 m³ per minute for a total of 3 minutes or more from all directions with the testing equipment in the figure below. 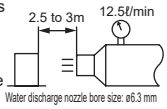

2. Surge suppressor

⚠ CAUTION

■ The surge suppressor attached with the solenoid valve is intended to protect the output contacts for the solenoid valve drive. There is no significant protection for the other peripheral devices, and devices could be damaged or could malfunction due to a surge. As well, surges generated by other devices may be absorbed and cause damage such as burning. Note the following points.

● The surge suppressor functions to limit a voltage surge in the solenoid valve, which can reach several hundred volts, to a low voltage level that the output contact can withstand. Depending on the output circuit used, this may be insufficient and could result in damage or malfunction. Check whether the surge suppressor can be used within the surge voltage limit of the solenoid valve in use, the output device's withstand pressure and circuit structure, and by the degree of return delay time. When necessary, provide other surge countermeasures. The solenoid valve with surge suppressor can suppress the inverse voltage surge that may occur when the solenoid valve is off to the level in the table below.

Specification voltage	Inverse voltage when OFF
12 VDC	Approx. 27 V
24 VDC	Approx. 47 V

● If the output unit is an NPN, a surge voltage equaling the voltage shown in the table above plus the power supply voltage may be applied to the output transistor. Make sure to implement a contact protection circuit to avoid the risk.

[Output transistor protection circuit: Installation example 1]

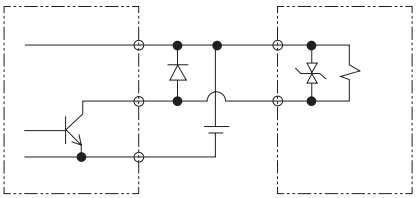

[Output transistor protection circuit: Installation example 2]

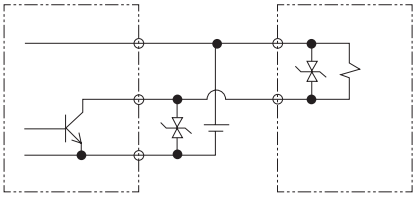

Design/selection

- If another device or solenoid valve is connected in parallel to the solenoid valve, the inverse voltage surge generated when the valve is OFF would apply to those devices. Even in the case of a solenoid valve with 24 VDC surge suppressor, a surge voltage may reach negative tens of volts for some models. This inverse voltage may cause damage or malfunction to other components connected in parallel. Avoid parallel connection of devices susceptible to inverse polarity voltages, e.g., LED indicators. When driving several solenoid valves in parallel, the surge from other solenoid valves may enter the surge suppressor of one solenoid valve, and it may burn depending on the current value. When driving several solenoid valves with surge suppressors in parallel, surge current could concentrate at the surge suppressor with the lowest limit voltage and cause similar burning. Due to the variations in surge suppressor limit voltage that exist even among solenoid valves of the same model No., in the worst case the surge suppressor may burn out. Avoid driving multiple solenoid valves in parallel.

Example of malfunction

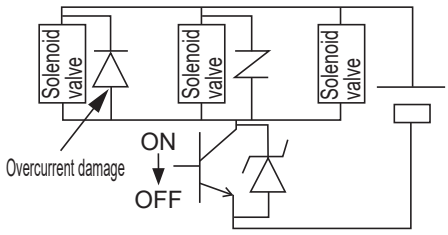

Countermeasure example

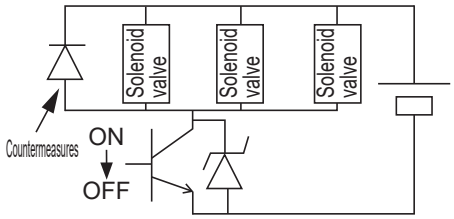

Countermeasure example for inverse voltage

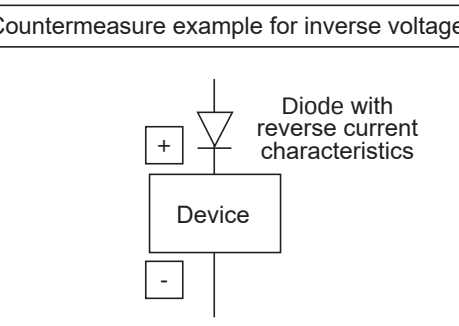

- The surge suppressor incorporated in the solenoid valve will often be short-circuited if it is damaged by an excessive voltage or current from the other solenoid valves. Where there is a failed surge suppressor, if a large current flows when the output is ON, in the worst case scenario, the output circuit or solenoid valve could be damaged or ignited. Do not continue energizing in a state of failure. Additionally, to prevent large currents from continuing to flow, connect an overcurrent protection circuit to the power supply and drive circuit, or use a power supply with overcurrent protection.

3. Partition plug

- The partition plug is not capable of separating the pilot flow path. Use a partition block when separating the pilot flow path.

4. Exhaust cleaner

⚠CAUTION

- Details of the exhaust cleaner are also listed in “Pneumatic/Vacuum/Auxiliary Components General (Catalog No. CB-024SA)”.

Mounting, installation and adjustment

1. Common

⚠CAUTION

■ Port displays

For the piping port positions, piping port displays such as 1P, 4A, etc., corresponding to ISO and JIS standards are displayed.

Applications	ISO standards	JIS standards
Supply port	1	P
Output port	4	A
Output port	2	B
Exhaust port	5	R1
Exhaust port	3	R2
Pilot air supply port	12/14	PA
Pilot exhaust port	82/84	PR

● There is no restriction in valve mounting orientation. Confirm the port codes and arrange the piping so that there are no reversed operations of the cylinder, etc.

2. Port filter

⚠CAUTION

■ The port filter prevents the entry of foreign matter, and prevents problems from occurring in the valve. As this does not improve the quality of the compressed air, read Warnings and Precautions in the Introduction, then mount, install, and adjust the filter accordingly.
Do not detach or press down the port filter forcibly. The filter could deform, causing problems. If contaminants and foreign matters are found on the filter surface, blow them lightly, or remove them by tweezers, etc.

A/B port filter example of embedding

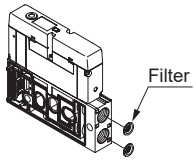

Female thread

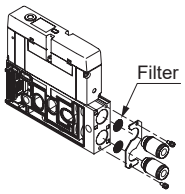

Cartridge fitting

3. Spacer regulator

⚠CAUTION

■ After pressure adjustment, in order to prevent the adjusting screw from becoming loose, fix the screw by tightening the hexagon nut.

4. Exhaust cleaner

⚠CAUTION

■ Install so that the exhaust cleaner is on the bottom side.

Use/maintenance

(1) Valve replacement

⚠CAUTION

■ When replacing the valve, install the valve so that the gasket does not fall out.

Mounting bolt	Screw size	Allen wrench size	Proper tightening torque (N·m)
Hexagon socket head cap screw	M4	Nominal 3	2.4 to 2.6

2. Manual override

⚠WARNING

■ How to operate manual override

● Push & non-locking operation
Push straight on the center of the axis of the manual button.

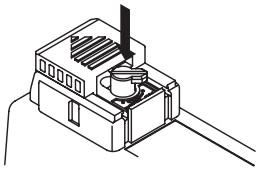

● Push locking operation
By pressing the manual button till it hits the bottom and turning the button clockwise by 90 degrees, the button will lock.

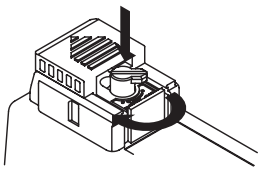

■ When conducting manual operation, make sure that there are no people near the operating cylinder.
■ With the non-locking/locking shared type manual override, be sure to release the lock prior to normal operation. This may cause malfunction.
■ In the unlikely event that the product is damaged, discontinue use.

⚠CAUTION

■ When locking, if the button is turned without being pressed, be careful as this may cause damage to the manual controls.
■ Note that the protection cover will not close unless the lock is released.

3. Pilot air OFF function (M7)

⚠CAUTION

■ As the supply of pilot air when energized will be forced to STOP, it will be possible to switch the main valve even when the unit is energized.
In addition, be careful as when the OFF function is used, the cylinder will immediately operate with 2-position single or 3-position ABR connection and PAB connection.

Output port destination correspondence chart

Solenoid position			OFF function (energized, M7 switch)		Non-energized, manual
			No operation	Operation (OFF)	Operation
2-position	Single	Sol energized→ a	4(A) →	2(B)	-
	Double	Sol energized→ a	4(A)	4(A) →	2(B)
		Sol energized→ b	2(B)	2(B) →	4(A)
3-position	All ports closed	Sol energized→ a	4(A)	4(A) →	2(B)
		Sol energized→ b	2(B)	2(B) →	4(A)
	ABR connection	Sol energized→ a	4(A)	- →	2(B)
		Sol energized→ b	2(B)	- →	4(A)
	PAB connection	Sol energized→ a	4(A)	4(A)/2(B) →	2(B)
		Sol energized→ b	2(B)	4(A)/2(B) →	4(A)

■ How to operate the M7 switch

❶ When using the OFF function
Slide the M7 switch in the direction of the arrow until it stops. As it is locking, the OFF function will not be released even after the operator takes their hand off of the switch.

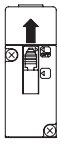

❷ During normal use
Always use upon returning the M7 switch to its original position.

WARNING
When conducting manual operations, make sure that there are no people near the operating cylinder.

4. How to replace cartridge fitting

⚠CAUTION

Check procedures before changing the push-in fitting size. If installed incorrectly, or if the tightening of the mounting screw is insufficient, air leakage could occur.

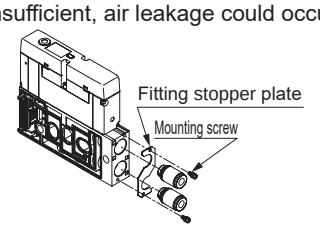

(1) Remove the mounting screw.
(2) Pull out the fitting stopper plate with the fitting.
(3) Align the groove of the replacement fitting with the stopper plate and assemble them temporarily.
(4) Assemble the stopper plate with the fitting, and tighten the mounting screw. Pull on the fitting to confirm that it is properly installed. (Tightening torque 0.55 to 0.65 N·m)

Model No. of cartridge push-in fitting

Model	Part name	Model No.
W4G4	ø8 straight	4G4-JOINT-C8
	ø10 straight	4G4-JOINT-C10
	ø12 straight	4G4-JOINT-C12

5. Exhaust cleaner

⚠CAUTION

■ Do not apply excessive force to the exhaust cleaner. This will lead to damage of the exhaust cleaner.

MN3S0/MN4S0

Pilot operated 3, 4-port valve

Pneumatic valve

PLC-compatible reduced wiring block manifold

Overview

The MN4S0 Series is a PLC compatible reduced wiring 3, 4-port solenoid valve which employs the single side solenoid system where lead wires are concentrated in one direction.
Suitable for operating cylinders of ø20 to ø40.

Features

Significant reduction of space for installation

A valve block with two 3-port valves integrated has been newly added to the series. It is possible to configure a highly integrated and space saving 3-port valve block manifold.

Easy wiring

With the D sub-connector and flat cable connector, the connector portion rotates by 90° and enables upward and lateral wiring.

Sleek design

Manual override and light display unit concentrated on the top surface. Maintenance is easy.
Employs the single side solenoid method. Exhaust muffler built in.
Top surface designed to be flat. A sleek design with no protrusions or dents.

Energy saving

Low wattage design (25 mA with 24 VDC)

Selectable reduced wiring methods

The serial transmission method, connector method, and common terminal block method are available.

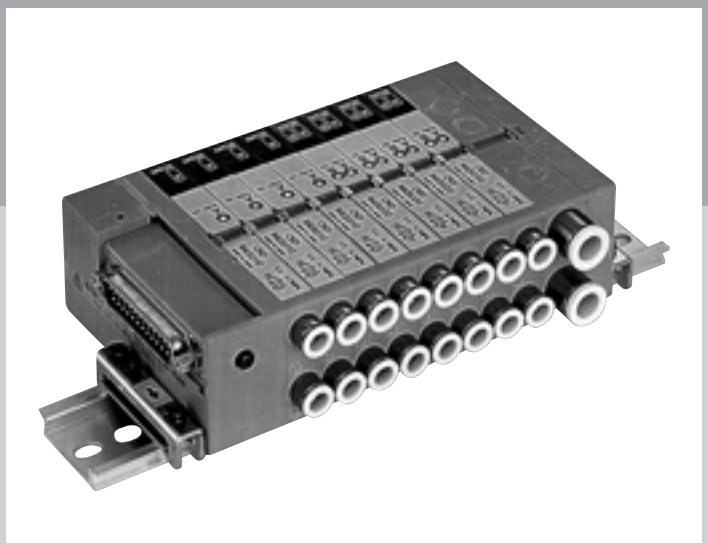

CONTENTS

Series variation	1192
Electrical connections list (wire connections/circuit)	1194
Reduced wiring block manifold	
● MN3S0/MN4S0	1196
Block components	1209
Technical data	
(1) Notes on wiring	1216
(2) How to disassemble/assemble block manifold	1221
(3) How to disassemble/assemble regulator/regulator block	1222
Block manifold specifications/wiring specifications sheet	1223
⚠ Safety precautions	1228

Series external appearance			Model No.		Position Number of solenoids JIS symbol	Valve performance: Flow characteristics C [dm³/(s·bar)] *1	Valve performance: Applicable cylinder bore size	Voltage (V)	
3, 4-port valve	**MN3S0/MN4S0** 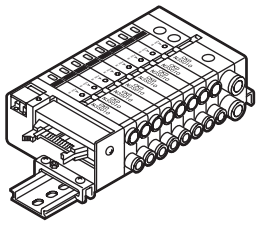	3-port	MN3SO	DIN rail mount	3-port valve ● 2-position Normally closed 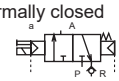 ● 2-position Normally open 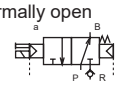 4-port valve ● 2-position single 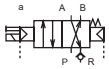 ● 2-position double 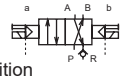 ● 3-position All ports closed 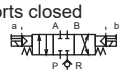 ● 3-position ABR connection  ● 3-position PAB connection 	0.57 to 0.80	ø20 to ø40	24 DC 12 DC	
		4-port	MN4SO						
	MT3S0/MT4SO 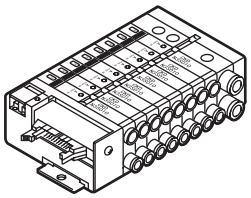	3-port	MT3SO	Direct mounting (Limited to 8 stations)					
		4-port	MT4SO						
Two 3-port valves integrated	**MN3S0** 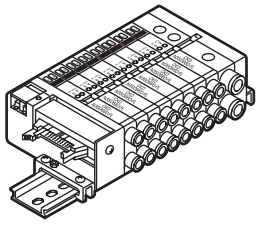 A valve block with two 3-port valves integrated in one station.	3-port	MN3S0	DIN rail mount	Two 3-port valves integrated ● NC/NC (N3S0660) B side: NC A side: NC 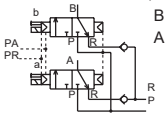 ● NC/NO (N3S0670) B side: NO A side: NC 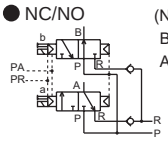 ● NO/NC (N3S0760) B side: NC A side: NO 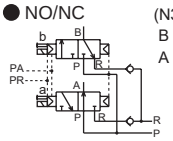 ● NO/NO (N3S0770) B side: NO A side: NO 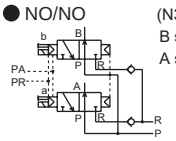	0.50	ø20 or less	24 DC 12 DC	
			MT3SO	Direct mounting (Limited to 8 stations)					

*1: Effective cross-sectional area S and sonic conductance C are converted as S ≈ 5.0 x C.

*1: Effective cross-sectional area S and sonic conductance C are converted as S ≈ 5.0 x C.

Switching position												Port size of A/B port			Wiring method					Page
3-port valve/4-port valve							Two 3-port valves integrated				Mix	Push-in fitting		Female thread						
2-position single	2-position double	3-position all ports closed	3-position A/B/R connection	3-position P/A/B connection	2-position single N.C.	2-position single N.O.	A side NC B side NC	A side NC B side NO	A side NO B side NC	A side NO B side NO		ø4	ø6	M5	Common terminal block	D sub-connector	Flat cable	Serial transmission	Individual wiring connector	
					●	●					●	●	●	●	●	●	●	●	●	1196
●	●	●	●	●							●	●	●	●	●	●	●	●	●	1196
					●	●					●	●	●	●	●	●	●		●	1196
●	●	●	●	●							●	●	●	●	●	●	●		●	1196
							●	●	●	●	●	●	●	●	●	●	●	●	●	1196
							●	●	●	●	●	●	●	●	●	●	●		●	1196

* Refer to the following page for details on wiring method/other options.

Wiring method

T10 Common terminal block (left-side mount)
T10R Common terminal block (right-side mount)

- Common wires are processed beforehand
- M3 thread tightening

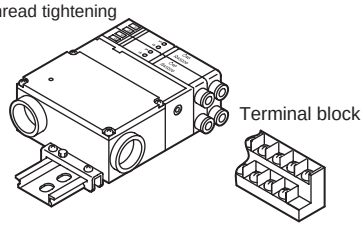

T50 Flat cable connector (right-side mount)
T50R Flat cable connector (left-side mount)

- Widely utilized with FA and OA equipment
- Compliant with MIL standards (MIL-C-83503)
- 20P, dedicated for 12/24 VDC

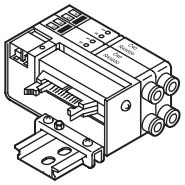

T11 Common terminal block (left-side mount)
T11R Common terminal block (right-side mount)

- Common wires are processed beforehand
- Press tightening

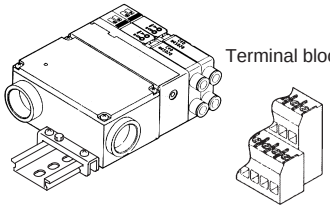

T6G1 Serial transmission

- Supports various PLC manufacturers (Mitsubishi Electric Corporation)
- Output points: 16 points
- Dedicated for 24 VDC

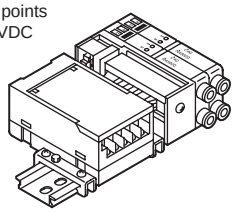

T30 D sub-connector (left-side mount)
T30R D sub-connector (right-side mount)

- Widely utilized with FA and OA equipment
- Specified connector of the RS232C standards
- 25P, dedicated for 24 VDC, 12 VDC

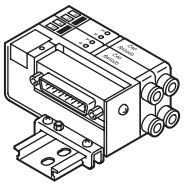

C Individual wiring connector with lead wire

- Lead wire length
  C : 300 mm
  C0: 500 mm
  C1: 1000 mm
  C2: 2000 mm

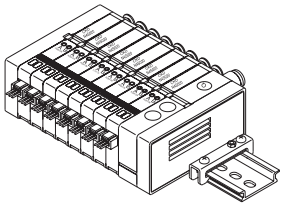

Manual operating device

Blank Non-locking

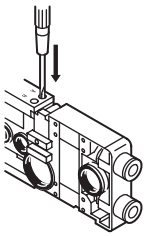

M1 Locking (tools required)

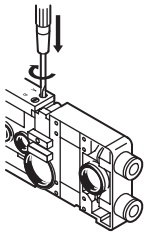

M2 Non-locking
Convex type

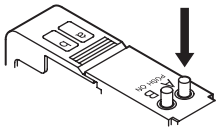

M3 Locking protrusion type

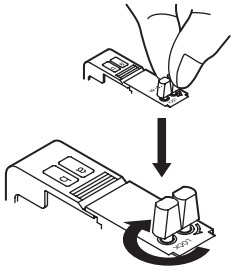

Internal circuit diagram with surge suppressor/indicator

* Varistor is used as a surge suppressor.

Single solenoid	Double solenoid
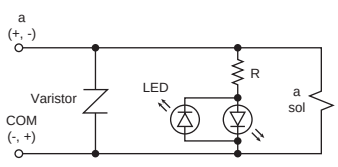	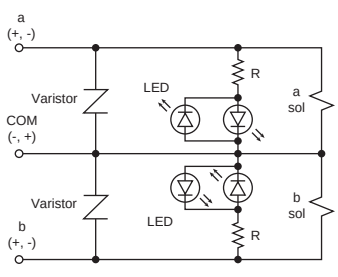

MEMO

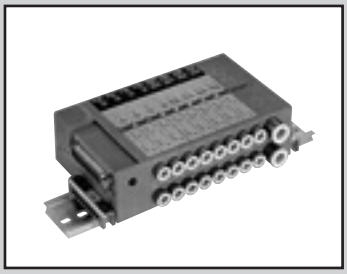

Reduced wiring block manifold
Pilot operated 3, 4-port valve

MN3S0/MN4S0 Series

● Cylinder bore size: ø20 to ø40

CE Refer to the Ending for details. RoHS CAD

JIS symbol

● 3-port valve

2-position single NC

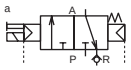

2-position single NO

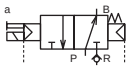

● 4-port valve

2 position single

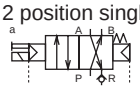

2-position double

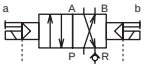

3-position all ports closed

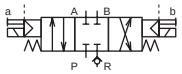

3-position A/B/R connection

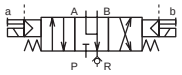

3-position P/A/B connection

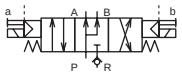

● 3 PoTwo -valves integrated

NC/NC (N3S0660)

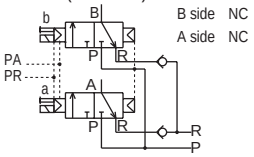

NC/NO (N3S0670)

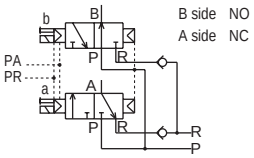

NO/NC (N3S0760)

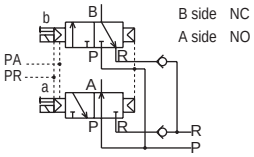

NO/NO (N3S0770)

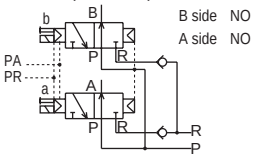

Common specifications

Item	Description
Manifold method	DIN rail mount Direct mounting (limited to 8 stations)
Manifold	ShuMedium exhaust, common supplyqi
Station No.	1Stations and up (refer to wiring specifications on next page)
Valve and operation	Pilot operated soft spool valve
Working fluid	Compressed air
Max. working pressure MPa	0.70
Min. working pressure MPa	0.20 (Main pressure is 0 when using an external pilot)
Proof pressure MPa	1.05
Ambient temperature °C	5 to 50
Fluid temperature °C	5 to 50
Lubrication	Not required
Degree of protection	Dust-proof
Vibration resistance m/s^2	50 or less
Shock resistance m/s^2	300 or less
Atmosphere	Cannot be used in corrosive gas environment.

Electrical specifications

Item			Description
Rated voltage V	DC		12, 24
voltage fluctuation rangeEnclosure			±10% (When using serial transmission +10%, -5%)
Holding current A	DC	12V	0.050
		24V	0.025
Power consumption W	DC	12V	0.6
		24V	
Thermal class			B
Surge suppressor			Varistor
Indicator			LED

Individual specifications

Port / Item		3-port valve	4-port valve	*1 3-port valve Two valves integrated
Port size	A/B port	ø4, ø6 push-in fitting, M5	ø4, ø6 push-in fitting, M5	ø4, ø6 push-in fitting, M5
	P/R port	ø8, ø6 push-in fitting	ø8, ø6 push-in fitting	ø8, ø6 push-in fitting
	External pilot port	ø6 push-in fitting	ø6 push-in fitting	-

*1: The two 3-port valves integrated valve block uses main pressure to operate the valving element, and therefore cannot be used with external pilot. Check for sufficient supply air flow that the supply pressure does not drop below the min. working pressure due to the operation of the connected load (air operated valve), etc.

Performance/characteristics by model

Port / Item		3-port valve	4-port valve	3-port valve Two valves integrated
Response time (*1) ms	2nd placeMounting	20 or less	20 or less	20 or less
	3rd placeMounting	-	30 or less	-

*1:The response times are values with supply pressure of 0.5MPa, without lubrication, and with the power ON. They depend on the pressure and the lubricant quality.

Flow characteristics

Item			C[dm^3/(s·bar)]	b
3-port valve	2-position		0.80	0.33
4-port valve	2-position		0.80	0.33
	3-position	All ports closed	0.57	0.31
		A/B/R connection	0.80	0.34
		P/A/B connection	0.60	0.31
Two 3-port valves integrated	2-position		0.50	0.17

*1: Effective cross-sectional area S and sonic conductance C are converted as S ≈ 5.0 x C.
*2: The flow characteristics are values with the exhaust check valve (standard).

Ozone-proof specifications (Ending Page 5)

** - Voltage - P11

CE marking specifications

** - Voltage - ST

・ Standard voltage of 24 VDC or less is CE marking-compatible even if the model No. is not indicated with "ST".

unit specifications

(Refer to page 1216 for the applicable PLC compatibility table.)

Item	T6G1
Unit side power voltage	24 VDC ±10%
Valve side power voltage	24 VDC +10%, -5%
Unit side current consumption	100 mA or less (when all output points are ON)
Valve side Current	15 mA or less (when all points are OFF)
Output points	16 points

*1: CC-Link Ver. 1.10.

Manifold wiring specifications (*1)

Item		Description	Max. station No.		
			Double solenoid	Single solenoid	Mix manifold (No. of solenoid valves)
Common terminal block	T10 (for left side) / T10R (for right side)	Terminal thread size M3	7 stations	14 stations	14 points
	T11 (for left side) / T11R (for right side)	26 pole press tightening	12 stations	24 stations	24 points
D sub-connector (25P)	T30 (for left side) / T30R (for right side)	D sub-connectors (25 terminals) compliant with MIL standards	12 stations	24 stations	24 points
Flat cable Connector (20P)	T50 (for left side) / T50R (for right side)	Crimping connector MIL-C-83503 standard compliant Flat cable 1.27 mm pitch 20 strands	8 stations	16 stations	16 points
Serial transmission (with dedicated unit)	T6G1	CC-Link compatible	8 stations	16 stations	16 points
Individual wiring connector (double is common)	C	Individual connector lead wire length 300 mm	-	-	-
	C0	Individual connector lead wire length 500 mm	-	-	-
	C1	Individual connector lead wire length 1000 mm	-	-	-
	C2	Individual connector lead wire length 2000 mm	-	-	-

*1: Consult with CKD to use a number of manifold stations greater than the max. station number for each reduced wiring specification.

Weight

Wiring block	Item	Common terminal block T10(R) / T11(R)	D sub-connector T30(R)	Flat cable connector T50(R)	Serial transmission T6G1	
	Weight (g)	175	85	85	220	
Supply and exhaust block	Item	Q	QK	QZ	QKZ	
	Weight (g)	48	53	48	60	
Partition block	Item	S	SA	SP	SE	
	Weight (g)	20	20	20	20	
Valve block	Item	N4S010	N4S020	N4S030/040/050	N3S010/110	N3S0**0
	Weight (g)	50	55	58	46	55
End block	Item	E (EL)	EX (EXL)			
	Weight (g)	50	50			
DIN rail	Item	-				
	Weight (g)	0.19 g/mm				

How to order manifold

D sub/flat cable connector, individual wiring C-connector

● Discrete valve block

N 3 S0 1 0 - C4 - M1 ( ) —— 3

● Block manifold

M N 3 S0 1 0 - C4 - M1 T10 - 5 - 3

● Regulator block equipped manifold

M N 3 S0 1 0 - C4 - R — T10 - 5 - 3 — Technical confirmation No.

Solenoid valve operation classification

*1: Be sure to fill in the "manifold specifications sheet" (pages 1225 to 1227).

Consult with CKD when ordering regulator block mounting manifold. (Technical confirmation No. is required)

● Refer to page 1219 for the model No. of cables with D sub-connector.

Code	Description		Type: Block manifold	Type: Discrete valve block
Ⓐ Model				
N	DIN rail mount		●	
T	Direct mounting method (valve block limited to 8 stations)		●	
Ⓑ Valve				
3	3-port valve, two 3-port valves integrated (*2)		●	●
4	4-port valve or 3, 4-port valve mix		●	●
Ⓒ Solenoid position				
1	3-port valve: 2-position Normally Closed single		●	●
11	3-port valve: 2-position Normally Open single		●	●
66	Two 3-port valves integrated: A side valve	Normally Closed	●	●
	B side valve	Normally Closed	●	●
67	A side valve	Normally Closed	●	●
	B side valve	Normally Open	●	●
76	A side valve	Normally Open	●	●
	B side valve	Normally Closed	●	●
77	A side valve	Normally Open	●	●
	B side valve	Normally Open	●	●
1	4-port valve: 2-position single		●	●
2	2-position double		●	●
3	3-position all ports closed		●	●
4	3-position A/B/R connection		●	●
5	3-position P/A/B connection		●	●
8	Mix manifold hold (when there are multiple solenoid positions)		●	
Ⓓ Port size				
C4	ø4 push-in fitting lateral		●	●
C6	ø6 push-in fitting lateral		●	●
CL4	ø4 push-in fitting upward		●	●
CL6	ø6 push-in fitting upward		●	●
M5	M5 female thread (with rotation-stop)		●	●
CX	Mix push-in fitting		●	
Ⓔ Manual override				
Blank	Non-locking manual override	Standard	●	●
M1	Locking manual override (tools required)	Option	●	●
M2	Non-locking protrusion	Custom order	●	●
M3	Locking protrusion	Custom order	●	●
MX	Mix of manual override		●	
Ⓕ Wiring method				
T10	Common terminal block (M3 screw) for left side		●	
T11	Common terminal block (press fastening) for left side		●	
T30	D sub-connector (25P) for left side		●	
T50	Flat cable connector (20P) for left side		●	
T10R	Common terminal block (M3 screw) for right side		●	
T11R	Common terminal block (press fastening) for right side		●	
T30R	D sub-connector (25P) for right side		●	
T50R	Flat cable connector (20P) for right side		●	
Blank	For reduced wiring			●
C	Individual wiring connector lead wire length 300 mm		●	●
C0	Individual wiring connector lead wire length 500 mm		●	●
C1	Individual wiring connector lead wire length 1000 mm		●	●
C2	Individual wiring connector lead wire length 2000 mm		●	●
Ⓖ Station No.				
1 to 24	1 station to 24 stations (Differs depending on the wiring specifications. Check the wiring specifications (page 1197).)		●	
8	Direct mounting method		●	
Ⓗ Voltage				
3	24 VDC		●	●
4	12 VDC		●	●

Ⓐ Model

Ⓑ Valve

Ⓒ Solenoid position

Ⓓ Port size (*3)

Ⓔ Manual override

Ⓕ Wiring method (*4) (*5)

Note Refer to page 1194 for circuit diagrams.

Ⓖ Manifold solenoid valve station No.

Ⓗ Voltage

⚠ Precautions for model No. selection

*2: The two 3-port valves integrated cannot be used with the external pilot. Consult with CKD for other working conditions.

*3: For A/B port filter equipped models (to prevent entry of foreign matter), place an F at the end of the port size code. (Option)

*4: Wiring methods of the direct mounting method are limited to T10, T11, T30, and T50.

*5: The wiring blocks and valve blocks of the reduced wiring will be connected with a specially designed cable. As the connections are made in advance within the wiring block, specify spare cables when placing an order if it is expected that an expansion or change of specifications will take place. (With standard wiring, the unit will come with 2 cables included.)

[Example of model No.]

MN3S0660-C4-T10-6-3

Block manifold

Ⓐ Model No. : DIN rail mount
Ⓑ Valve : Two 3-port valves integrated
Ⓒ Solenoid position : A side valve: Normally Closed
B side valve: Normally Closed
Ⓓ Port size : ø4 push-in fitting lateral (cylinder port)
Ⓔ Manual override : Non-locking manual override
Ⓕ Wiring method : Common terminal block (M3 screw)
Ⓖ Manifold solenoid valve station No. : 6 stations
Ⓗ Voltage : 24 VDC

How to order manifold Serial transmission

● Discrete valve block

N 4 S0 1 0 - C4 - M1 ——— 3

● Block manifold

M N 4 S0 1 0 - C4 - M1 T6G1 - 5 - 3

● Regulator block equipped manifold

M N 4 S0 1 0 - C4 - R — T6G1 - 5 - 3 — Technical confirmation No.

Solenoid valve operation classification

*1: Be sure to fill in the "manifold specifications sheet" (pages 1225 to 1227).

Consult with CKD when ordering regulator block mounting manifold. (Technical confirmation No. is required)

Code	Description		Type: Block manifold	Type: Discrete valve block
Ⓐ Model				
N	DIN rail mount		●	
Ⓑ Valve				
3	3-port valve, two 3-port valves integrated (*2)		●	●
4	4-port valve or 3, 4-port valve mix		●	●
Ⓒ Solenoid position				
1	3-port valve	2-position Normally Closed single	●	●
11	3-port valve	2-position Normally Open single	●	●
66	Two 3-port valves integrated	A side valve Normally Closed	●	●
		B side valve Normally Closed	●	●
67		A side valve Normally Closed	●	●
		B side valve Normally Open	●	●
76		A side valve Normally Open	●	●
		B side valve Normally Closed	●	●
77		A side valve Normally Open	●	●
		B side valve Normally Open	●	●
1	4-port valve	2-position single	●	●
2		2-position double	●	●
3		3-position all ports closed	●	●
4		3-position A/B/R connection	●	●
5		3-position P/A/B connection	●	●
8	Mix manifold (when there are multiple solenoid positions)		●	
Ⓓ Port size				
C4	ø4 push-in fitting lateral		●	●
C6	ø6 push-in fitting lateral		●	●
CL4	ø4 push-in fitting upward		●	●
CL6	ø6 push-in fitting upward		●	●
M5	M5 female thread (with rotation-stop)		●	●
CX	Mix push-in fitting		●	
Ⓔ Manual override				
Blank	Non-locking manual override	Standard	●	●
M1	Locking manual override (tools required)	Option	●	●
M2	Non-locking protrusion	Custom order	●	●
M3	Locking protrusion		●	●
MX	Mix of manual override		●	
Ⓕ Wiring method				
T6G1	Serial transmission (CC-Link compatible 16 points)		●	
Ⓖ Station No.				
1 to 16	1 station to 16 stations	Differs depending on the wiring specifications. Check the wiring specifications (page 1197).	●	
Ⓗ Voltage				
3	24 VDC		●	●

Ⓐ Model
Ⓑ Valve
Ⓒ Solenoid position
Ⓓ Port size *3
Ⓔ Manual override
Ⓕ Wiring method (*4) Note Refer to page 1194 for circuit diagrams.
Ⓖ Manifold solenoid valve station No.
Ⓗ Voltage

⚠ Precautions for model No. selection

*2: The two 3-port valves integrated cannot be used with the external pilot. Consult with CKD for other working conditions.
*3: For A/B port filter equipped models (to prevent entry of foreign matter), place an F at the end of the port size code. (Option)
*4: The wiring blocks and valve blocks of the reduced wiring will be connected with a specially designed cable. As the connections are made in advance within the wiring block, specify spare cables when placing an order if it is expected that an expansion or change of specifications will take place. (With standard wiring, the unit will come with 2 cables included.)

[Example of model No.]

MN3S010-C4-T6G1-6-3
Block manifold

Ⓐ Model No. : DIN rail mount
Ⓑ Valve : 3-port valve
Ⓒ Solenoid position : 2-position normally closed Single
Ⓓ Port size : ø4 Push-in fitting lateral (Cylinder port)
Ⓔ Manual override : Non-locking manual override
Ⓕ Wiring method : Serial transmission (CC-Link compatible 16 points)
Ⓖ Manifold solenoid valve station No. : 6 stations
Ⓗ Voltage : 24 VDC

Internal structure and parts list

N3S0660

● (Two 3-port valves integrated NC/NC)

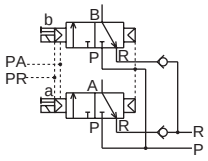

B side NC

A side NC

N3S0670

● (Two 3-port valves integrated NC/NO)

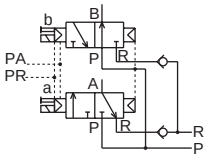

B side NO

A side NC

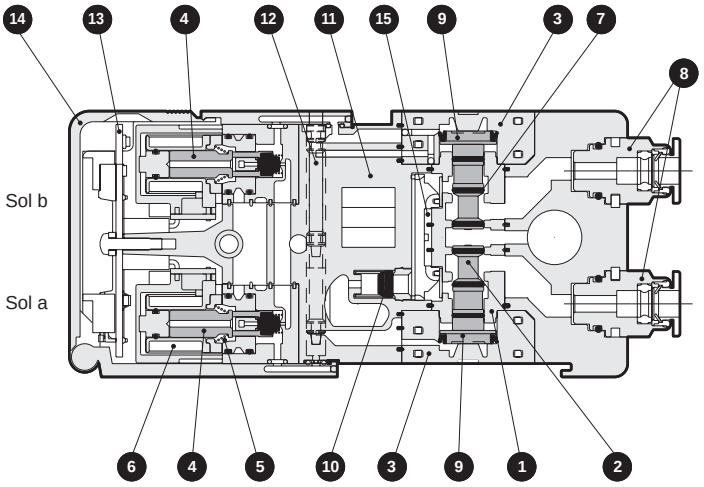

The figure shows the two 3-port valve integrated NC/NC in a state with solenoids OFF on both sides.

N3S0760

● (Two 3-port valves integrated NO/NC)

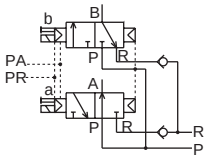

B side NC

A side NO

N3S0770

● (Two 3-port valves integrated NO/NO)

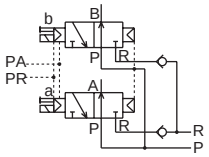

B side NO

A side NO

Main parts list

No.	Part name	Material	No.	Part name	Material
1	Body	Aluminum alloy	9	Piston D assembly	-
2	Valving element (spool)	Aluminum alloy	10	Exhaust check valve	-
3	Cap	-	11	Pilot block	Resin
4	Plunger	Stainless steel	12	Manual shaft	Aluminum
5	Plunger spring	Stainless steel wire	13	Circuit board assembly	-
6	Coil assembly	-	14	Wiring cover	Polycarbonate
7	Spool packing	Nitrile rubber	15	Lead valve assembly	-
8	Cartridge push-in fitting	-			

Internal structure and parts list

N3S010

● 2-position single normally closed

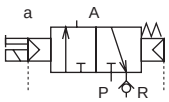

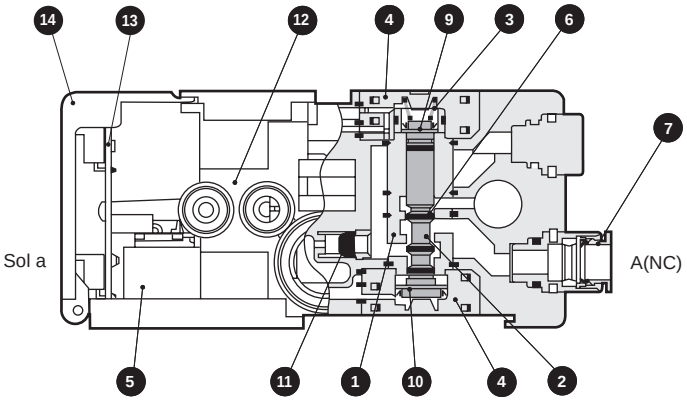

N3S0110

● 2-position single normally open

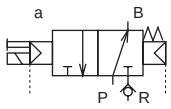

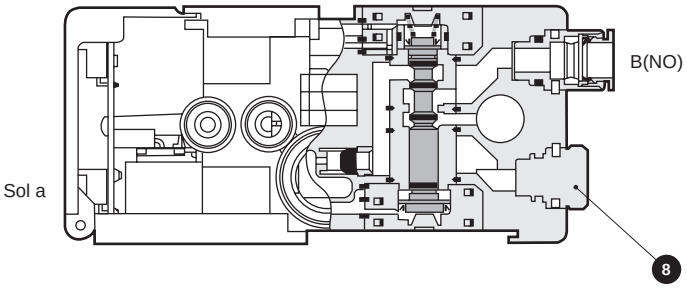

Main parts list

No.	Part name	Material	No.	Part name	Material
1	Body	Aluminum alloy	9	Piston S assembly	-
2	Valving element (spool)	Aluminum alloy	10	Piston D assembly	-
3	Valve spring	-	11	Exhaust check valve	-
4	Cap	-	12	Pilot block	Resin
5	Coil assembly	-	13	Circuit board assembly	-
6	Spool packing	Nitrile rubber	14	Wiring cover	Polycarbonate
7	Cartridge push-in fitting	-			
8	Plug cartridge	-			

Internal structure and parts list

N4S010

● 2-position single

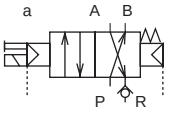

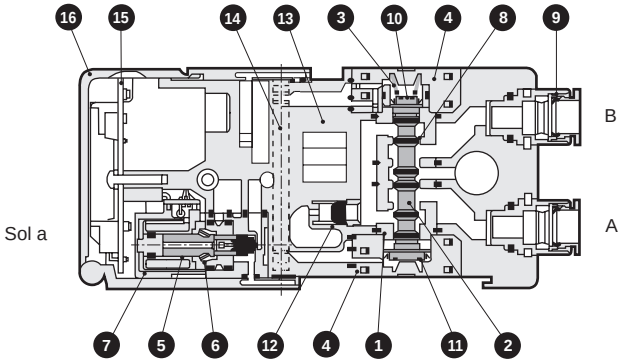

N4S020

● 2-position double

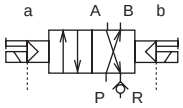

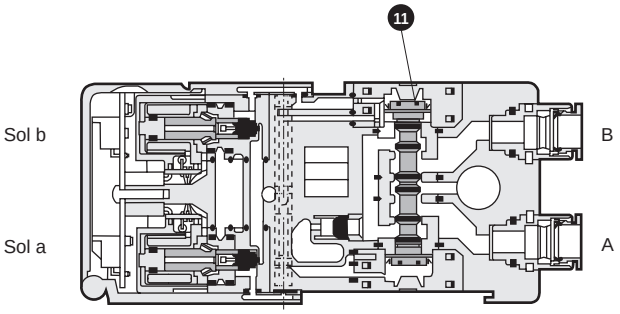

N4S030

● 3-position all ports closed

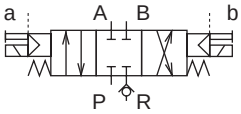

N4S040

● 3-position ABR connection

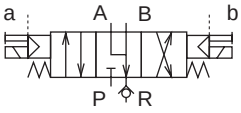

N4S050

● 3-position PAB connection

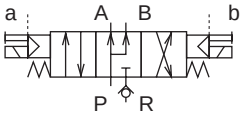

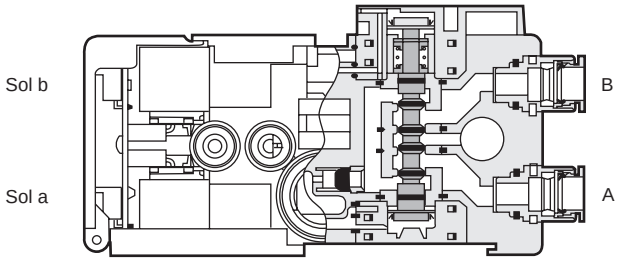

The figure shows the state when the all ports closed valve is OFF.

Main parts list

No.	Part name	Material	No.	Part name	Material
1	Body	Aluminum alloy	9	Cartridge push-in fitting	-
2	Valving element (spool)	Aluminum alloy	10	Piston S assembly	-
3	Valve spring	-	11	Piston D assembly	-
4	Cap	-	12	Exhaust check valve	-
5	Plunger	Stainless steel	13	Pilot block	Resin
6	Plunger spring	Stainless steel wire	14	Manual shaft	Aluminum
7	Coil assembly	-	15	Circuit board assembly	-
8	Spool packing	Nitrile rubber	16	Wiring cover	Polycarbonate

Internal structure and parts list

N4S0-Q

● Supply and exhaust block (for internal pilot)

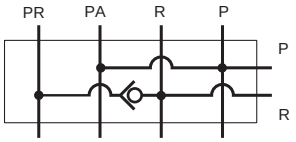

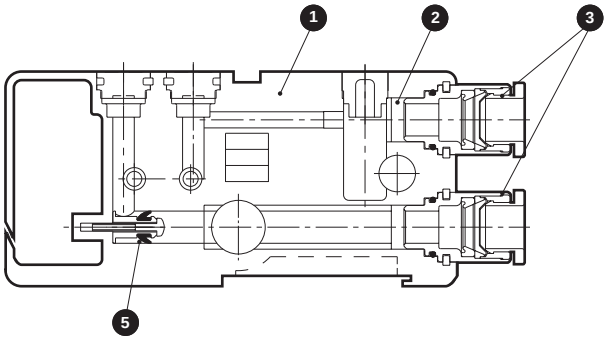

N4S0-QK

● Supply and exhaust block (for external pilot)

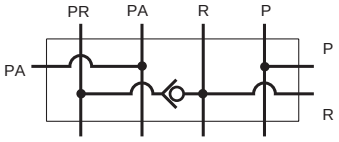

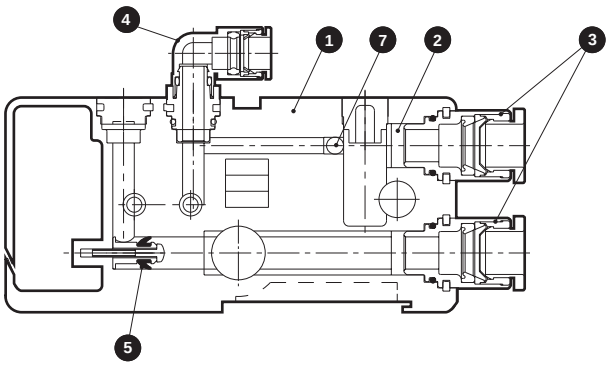

N4S0-QZ

● Supply and exhaust block (for multi-pressure circuit)

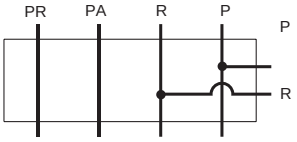

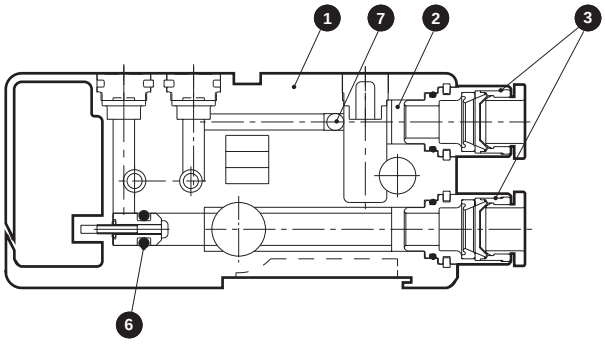

N4S0-QKZ

● Supply and exhaust block (for external pilot PA/PR separate)

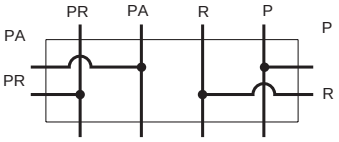

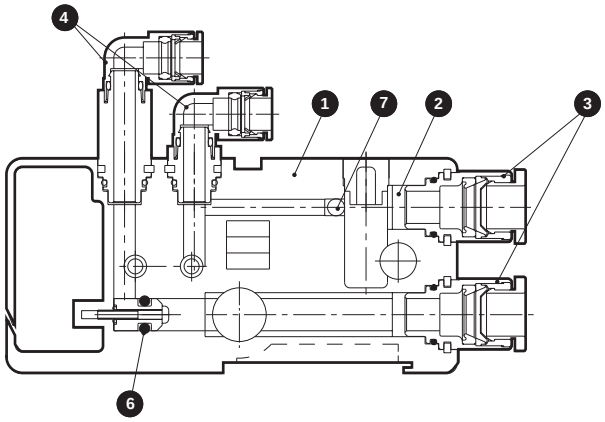

Main parts list

No.	Part name	Material	No.	Part name	Material
1	Supply and exhaust block	Resin	5	Exhaust pressure check valve	-
2	Filter	-	6	R/PR separation plug	-
3	Cartridge push-in fitting (main piping section)	-	7	Steel ball	Stainless steel
4	Cartridge push-in fitting (external pilot piping section)	-			

Dimensions CAD

MN$\frac{3}{4}$S0*0-*-*T6G1-*-*

● Serial transmission (T6G1)

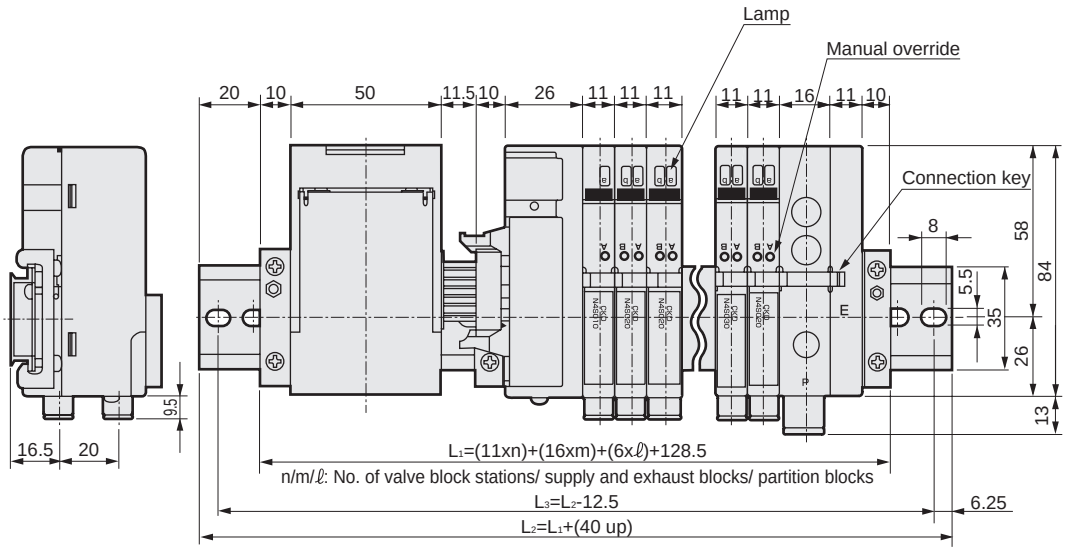

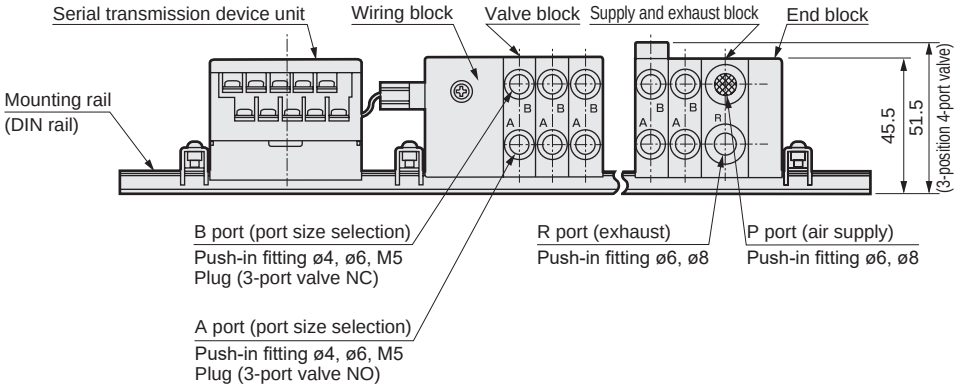

Various piping block portion dimensions (common for all types)

● Valve block/ push-in fitting upward N$\frac{3}{4}$S0*0-CL6 (CL4)

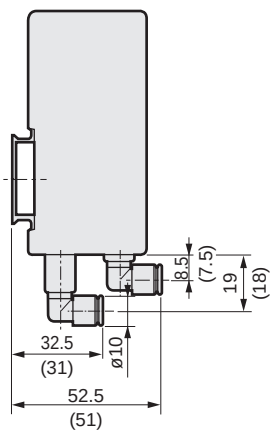

● Valve block/M5, fitting N$\frac{3}{4}$S0*0-M5

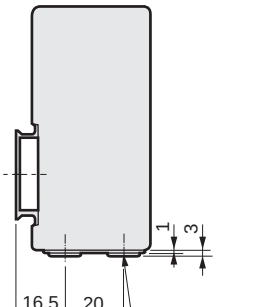

● Supply and exhaust block/ upward piping N4S0-Q-8L

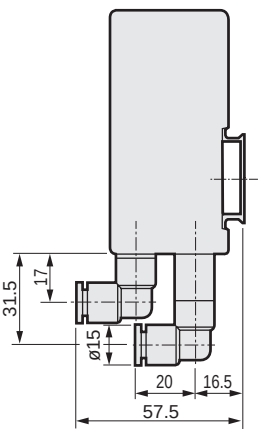

● Supply and exhaust block/ for external pilot N4S0-QK

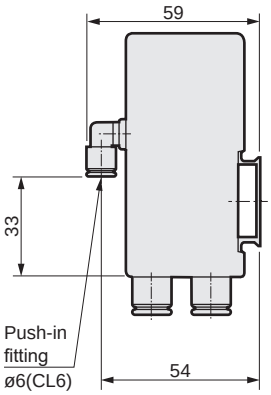

Dimensions CAD

MN$^{3}_{4}$S0*0-*-*T10-*-*
MN$^{3}_{4}$S0*0-*-*T11-*-*

With the right side wiring specifications, the wiring block and end block will switch places.

● Common terminal block: (T10/T10R/T11/T11R)

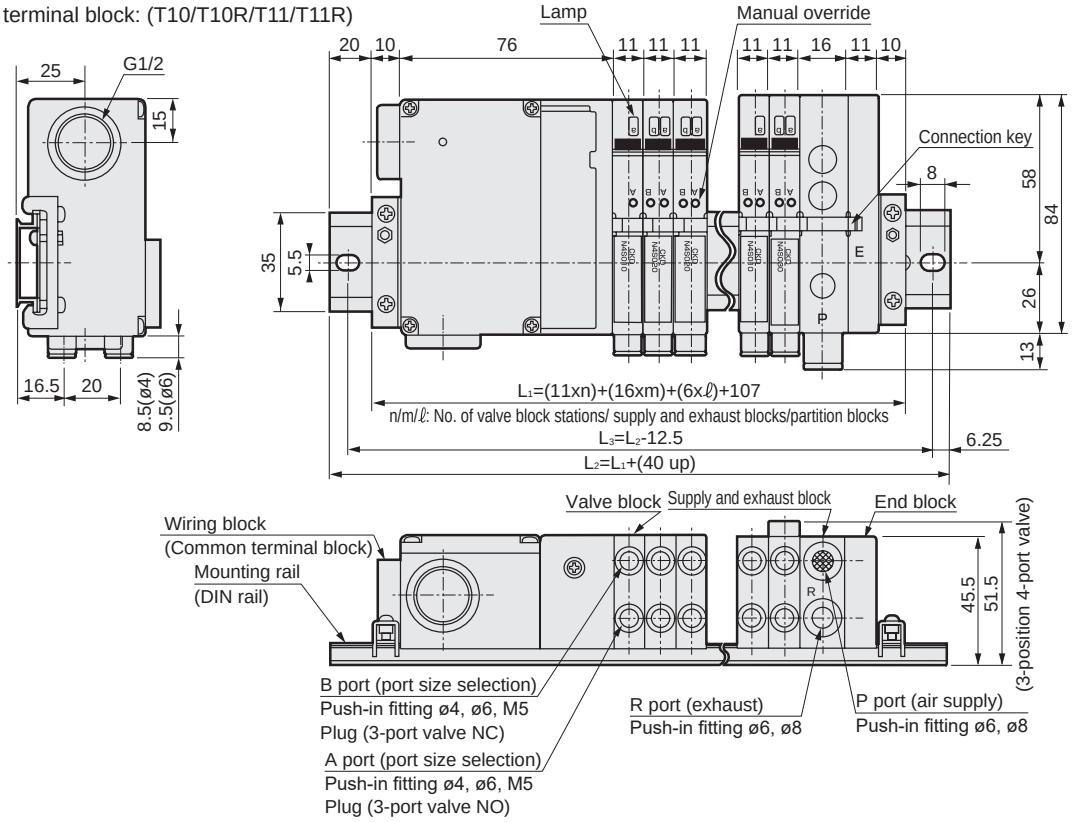

MN$^{3}_{4}$S0*0-*-* (C to C2) -*-*

● Individual wiring connector (C/C0/C1/C2)

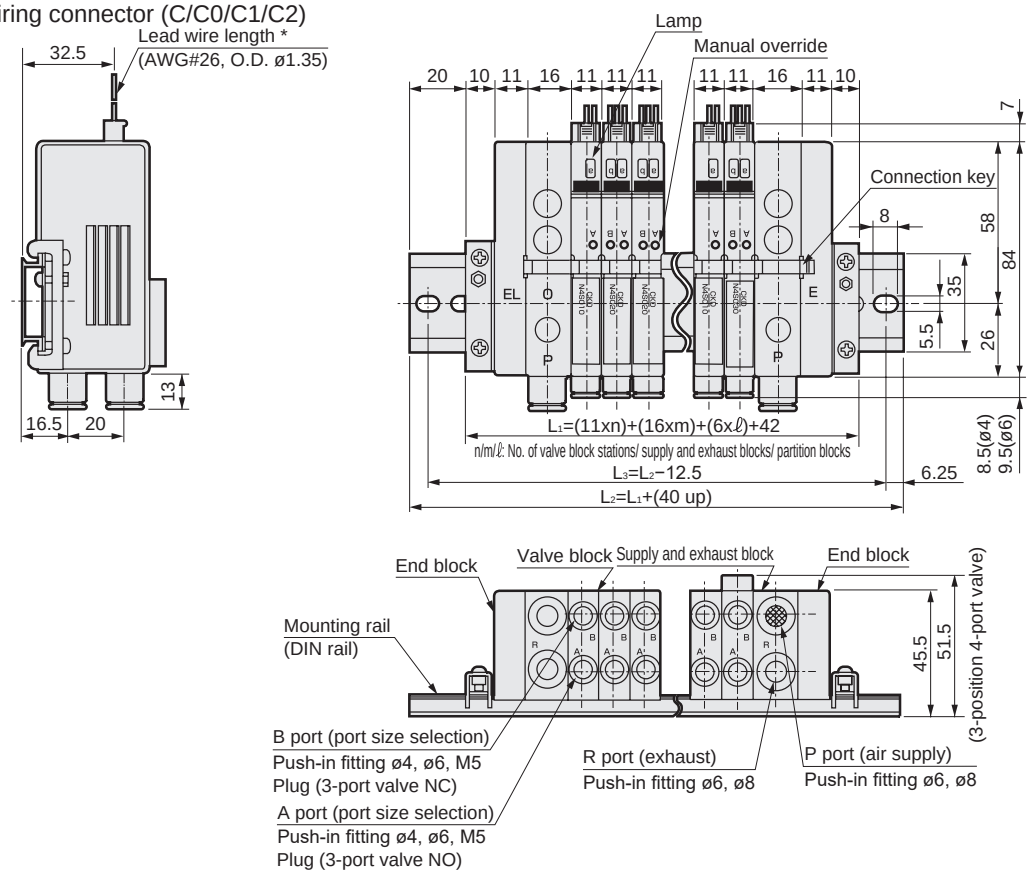

* Refer to page 1204 for dimensions of various piping block units.

Dimensions CAD

$MN^{3}_{4}S0*0-*-*T30-*-*$
$MN^{3}_{4}S0*0-*-*T30R-*-*$

● D sub-connector: (T30/T30R)

With the right side wiring specifications, the wiring block will be on the right side while the end block will be on the left side.

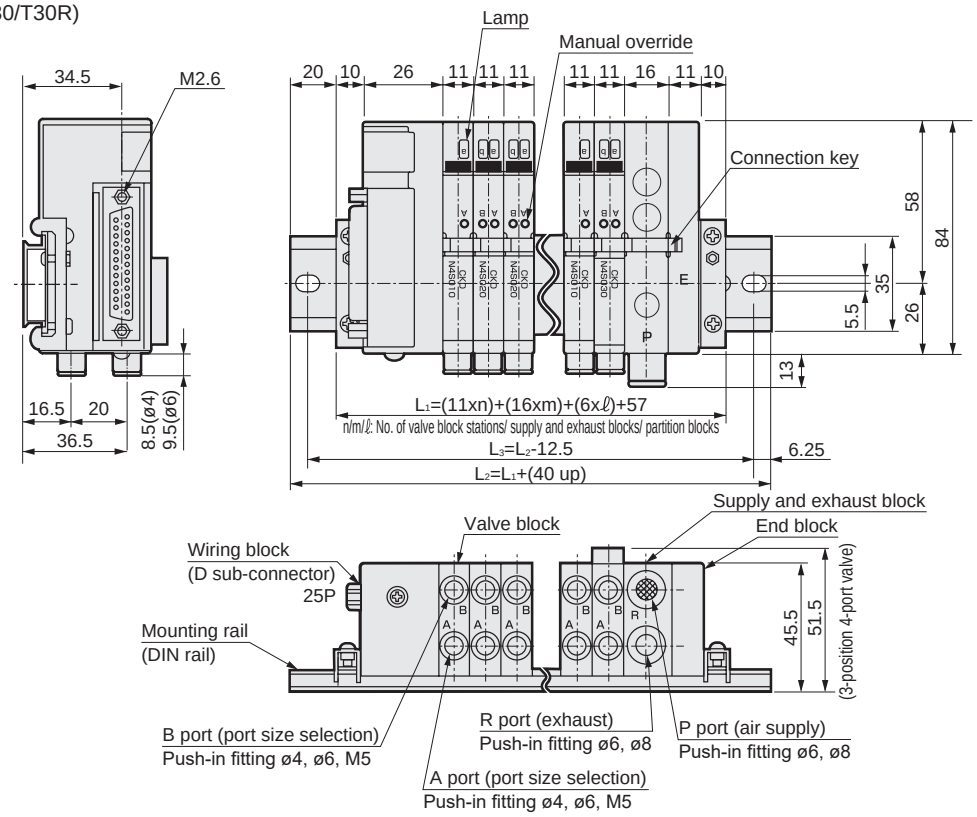

$MN^{3}_{4}S0*0-*-*T50-*-*$
$MN^{3}_{4}S0*0-*-*T50R-*-*$

● Flat cable connector: (T50/T50R)

With the right side wiring specifications, the wiring block will be on the right side while the end block will be on the left side.

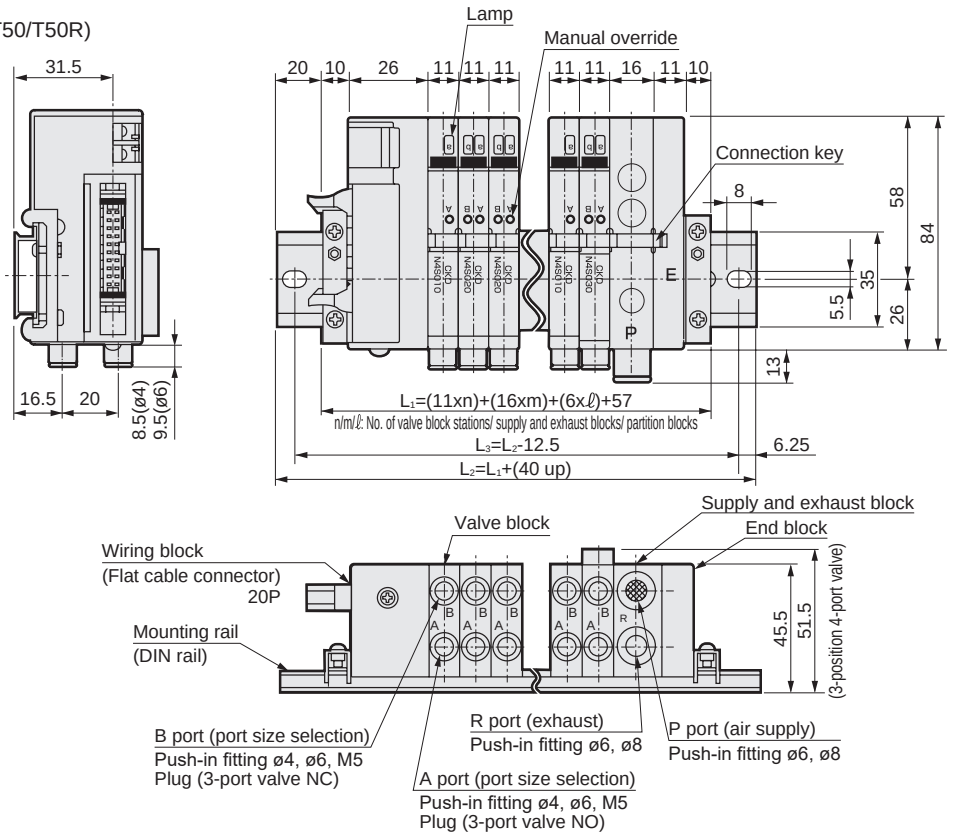

* Refer to page 1204 for dimensions of various piping block units.

Dimensions

● N4S0-RA (pressure adjustment knob rear)

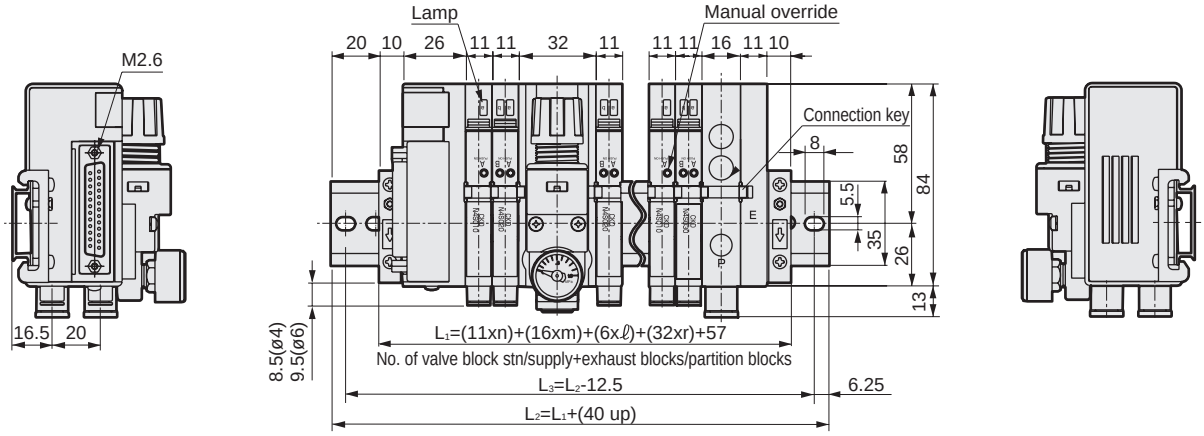

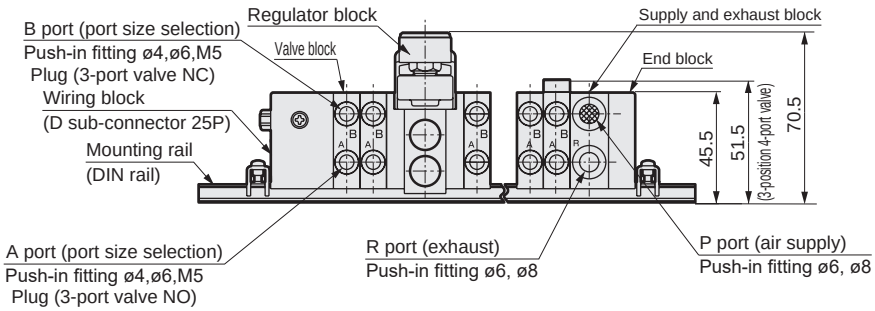

● N4S0-RB (pressure adjustment knob front)

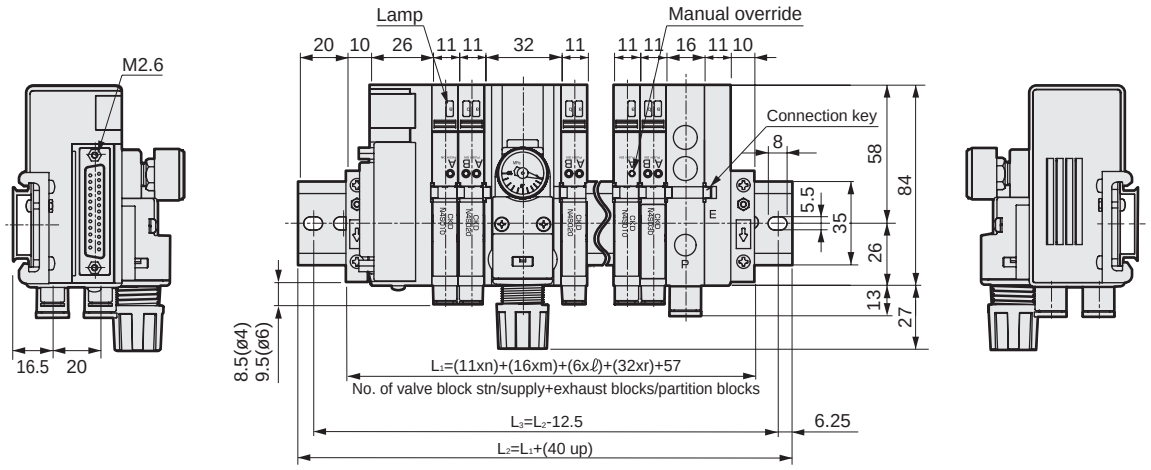

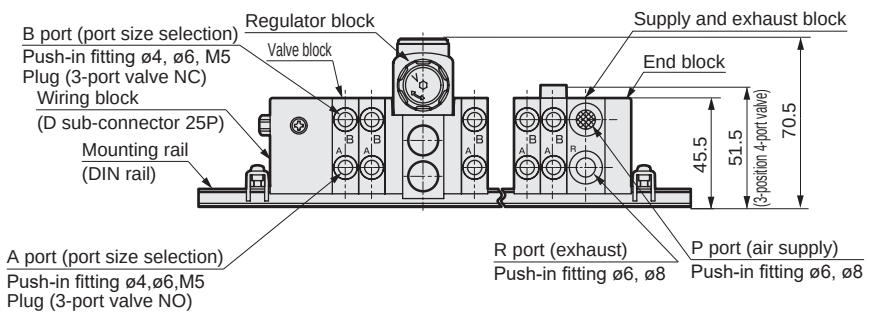

Dimensions CAD

$MT^{3}_{4}S0*0-*-*T10-*-*$
$MT^{3}_{4}S0*0-*-*T11-*-*$

● Common terminal block: (T10/T11)

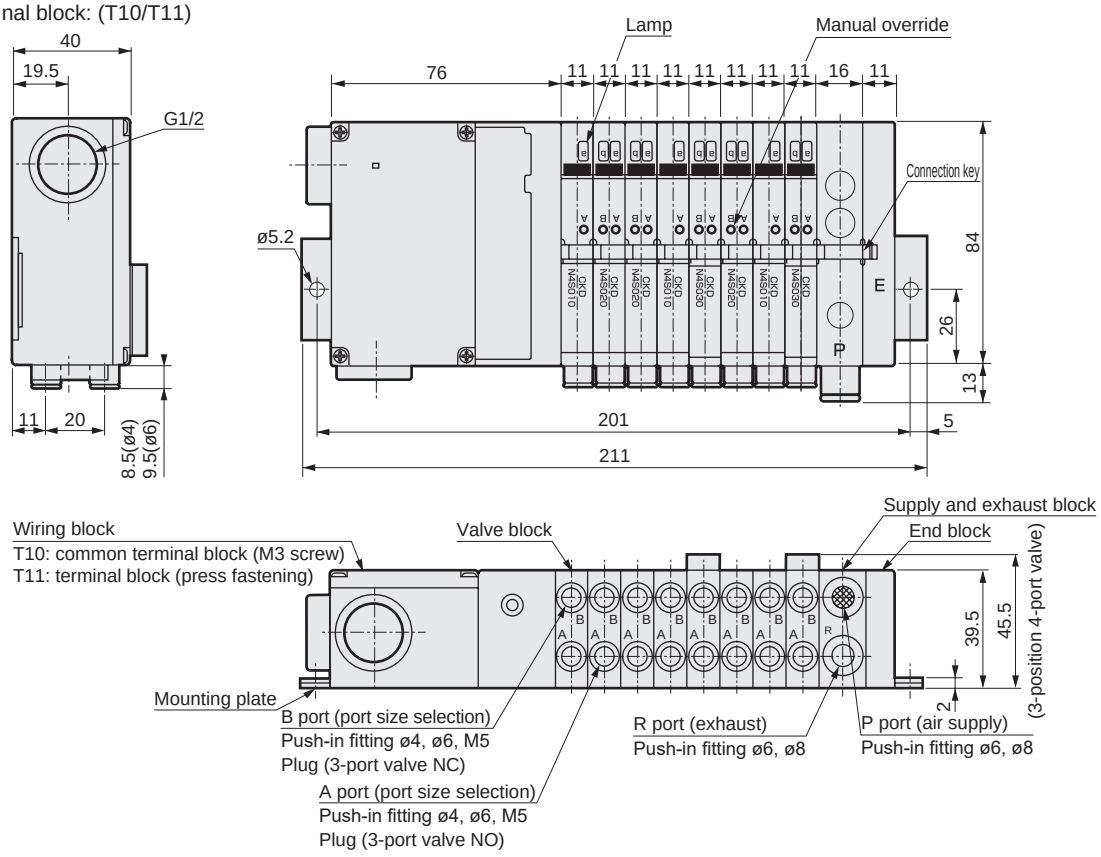

$MT^{3}_{4}S0*0-*-*T30-*-*$
$MT^{3}_{4}S0*0-*-*T50-*-*$

● D sub/flat cable connector: (T30/T50)

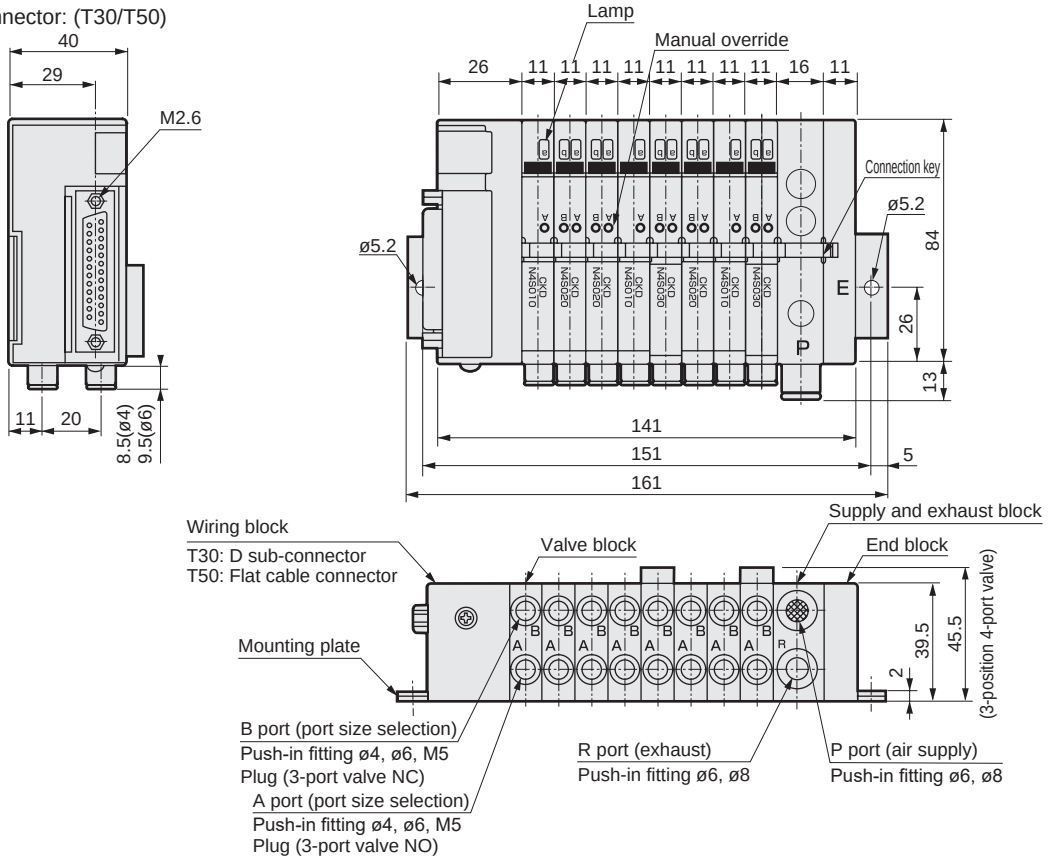

* Refer to page 1204 for dimensions of various piping block units.

Free assembly allows multiple stations to be expanded or reduced and serviced.

- The wiring block will be installed on the left side (right side) with the cylinder port facing forward while the end block will be installed on the right side (left side). In addition, these will be installed so as to sandwich the supply and exhaust block, valve block, and partition block.
- The supply and exhaust block can be installed at any position adjacent to the valve block. Generally, the block is installed on the right with the A/B (cylinder) port facing forward.
- The selected supply and exhaust block determines internal or external pilot operated. Valve block is the same for both types. By combining partition blocks and supply and exhaust blocks, it is possible to have a mixed configuration of different pressures, internal pilots, and external pilots.

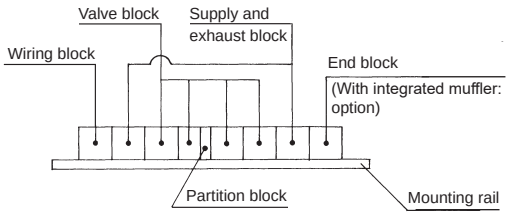

Block manifold configuration

- Piping
- Wiring
- Option
- Related products

Piping block

A End block (E)
Right side mount

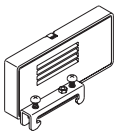

Left side mount

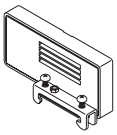

B Supply and exhaust block (Q)
● Q-8
QZ-8

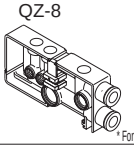

● Q-8L
QZ-8L

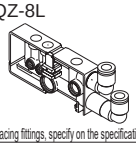

* For downward facing fittings, specify on the specification sheet.

B Supply and exhaust block (QK) (QZ) (QKZ)
● QK-8

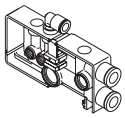

● QK-8L

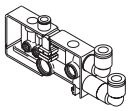

● Q-8X
QZ-8X

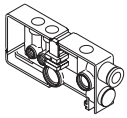

● Q-8LX
QZ-8LX

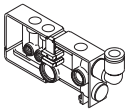

● QKZ-8

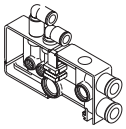

● QKZ-8L

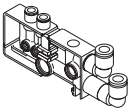

C Push-in fitting Lateral

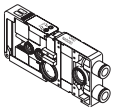

C Push-in fitting Upward

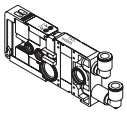

C Individual connectors

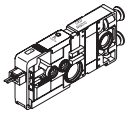

D Partition block

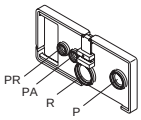

* For downward facing fittings, specify on the specification sheet.

Wiring block

E Serial transmission unit (T6G1)

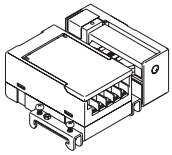

F D sub-connector block (T30/T30R)
Left side mount

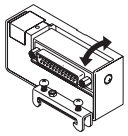

Right side mount

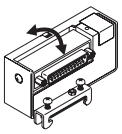

G Flat cable connector block (T50/T50R)
Left side mount

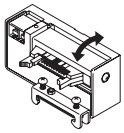

Right side mount

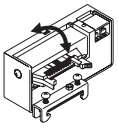

H Common terminal box (T10, T11)
Left side mount

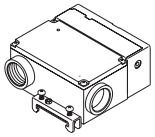

Right side mount

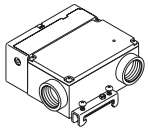

Regulator block

I

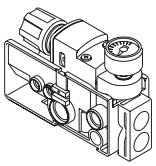

Related products

J Mounting rail

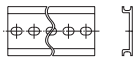

J Blanking plug

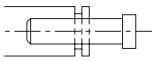

J Push-in cartridge fitting

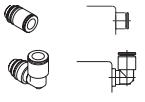

J Silencer

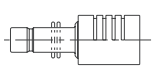

J Push-in fitting tube remover



J Push-in cartridge fitting for supply and exhaust block

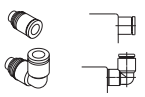

Piping

A End block (E)

Right side mount

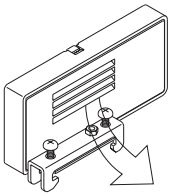

When using with atmosphere release, use the EX with a large exhaust flow rate.
Effective cross-sectional area 23mm^2

N4S0 - E

Code	Description
E	End block on right side
EX	Exhaust muffler embedded end block for right side

Left side mount

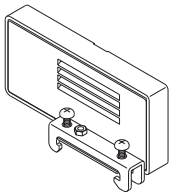

When using with atmosphere release, use the EXL with a large exhaust flow rate.
Effective cross-sectional area 23mm^2

N4S0 - EL

Code	Description
EL	End block on left side
EXL	Exhaust muffler embedded end block for left side

B Supply and exhaust block (Q) (QK) (QZ) (QKZ)

● Q-8
QZ-8

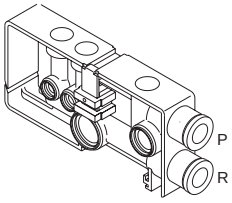

● Q-8L
QZ-8L

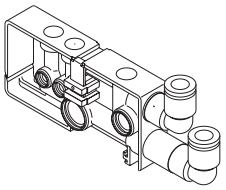

● QK-8

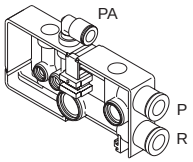

● QK-8L

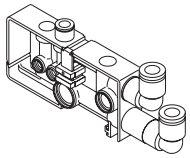

● Q-8X
QZ-8X

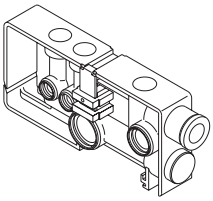

● Q-8LX
QZ-8LX

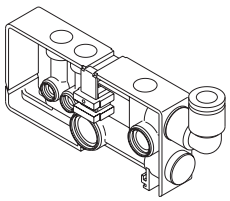

● QKZ-8

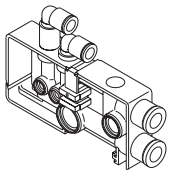

● QKZ-8L

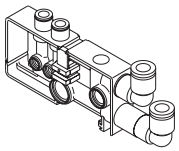

Single supply and exhaust block **N4S0 - Q - 8 ○**

Code	P-port	PA port	R port	PR port	Pipe direction	Applications
Q-8 (X)	Collective ø8 fitting		Collective ø8 fitting (Plug)		Side	Internal pilot
Q-8L (X)					Up	
QK-8 (X)	ø8 fitting	ø6 fitting			Side	Dedicated for external pilot
QK-8L (X)					Up	
QZ-8 (X)	ø8 fitting	—	ø8 fitting (plug)	—	Side	For multi-pressure circuit
QZ-8L (X)					Up	
QKZ-8 (X)	ø8 fitting	ø6 fitting	ø8 fitting (plug)	ø6 fitting	Side	For separate external pilot circuit
QKZ-8L (X)					Up	

- With the atmosphere release, the exhaust will be released from the end block. In this case, when the R port must be equipped with a plug, place an X at the end of the model No.
- Port sizes of ø6, 1/4 (ø6.4) for the P/R port are available as a custom order. The model No. is N4S0-Q-6 for ø6 and N4S0-Q-6.4 for 1/4
- QZ is used in combination with Q and QK. This cannot be used as an independent part.
- In order to prevent foreign matter from entering, the P port is equipped with a filter. (Standard)

Piping

C MN_4^3S0 series manifold configuring block valve

● Push-in fitting lateral

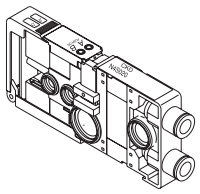

● Push-in fitting upward

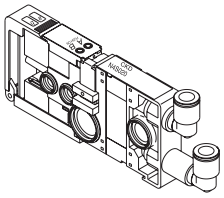

● Individual wiring connector

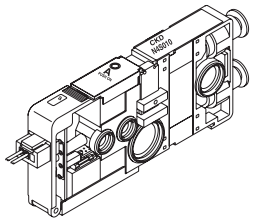

Discrete valve block **N 4 S0 1 0 - C4 - M1 ( ) - 3**

A Valve		B Solenoid position			C Port size		D Manual override			E Wiring method			F Voltage		
3	3-port valve or two 3-port valves integrated	3-port valve	1	2-position normally closed single	C4	ø4 push-in fitting lateral	Blank	Non-locking manual override	Standard	Blank	For reduced wiring	Std.	3	24 VDC	Standard
			11	2-position normally open single	C6	ø6 push-in fitting lateral	M1	Manual override lock (tools needed)	Option	C	Individual wiring connector Lead wire length 300 mm	Option	4	12 VDC	
4	4-port valve	Two 3-port valves integrated	66	A side: NC / B side: NC	CL4	ø4 push-in fitting upward	M2	Non-locking protrusion	Custom order	C0	Individual wiring connector Lead wire length 500 mm				
			67	A side: NC / B side: NO	CL6	ø6 push-in fitting upward	M3	Locking protrusion		C1	Individual wiring connector Lead wire length 1,000 mm				
			76	A side: NO / B side: NC	M5	M5 female thread, rotation-stop				C2	Individual wiring connector Lead wire length 2,000 mm				
			77	A side: NO / B side: NO											
		4-port valve	1	2-position single											
			2	2-position double											
			3	3-position all ports closed											
			4	3-position ABR connection											
			5	3-position PAB connection											

* For AB port filter equipped models (to prevent entry of foreign matter), place an F at the end of the port size code (option)

● When placing an order for only the cable line for individual connectors, indicate S for single or D for double.
Example: N4S0-INDIVIDUAL-CONNECTOR-CS1

D Partition block

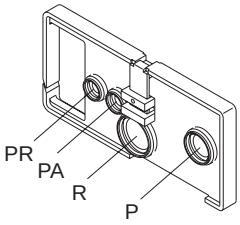

Note when configuring the system that the PA and PR passages of the pilot pressure are not sealed with blocks other than the SA. S is utilized for differing pressure specifications.

N4S0 - SA

Code	Description	
SA	P, R, PA, PR blocked	Standard
S	P, R blocked, PA, PR through	
SP	P blocked, R, PA, PR through	Option
SE	R blocked, P, PA, PR through	

Wiring

(Wiring block)

* As this is manufactured as a single unit with the wiring cables, it is not possible to place an order for the wiring block only.

E Serial transmission unit (T6G1)

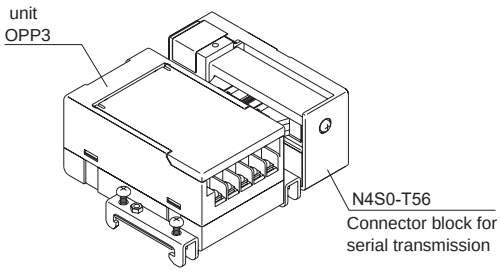

N4S0 - T6G1

The serial device unit and manifold are connected with a flat cable connector.
The working power is 24 VDC.

Item		Description	
Serial transmission	**T6G1**	16 points	CC-Link compatible

Discrete serial transmission device unit model No.

N4S0 - OPP3 - 1G

A Wiring method

Code	Description
A Wiring method	
1G	T6G1 Serial transmission (CC-Link compatible 16 points)

Wiring (Wiring block)
* As this is manufactured as a single unit with the wiring cables, it is not possible to place an order for the wiring block only.

F D-sub-connector block (T30/T30R)

*MIL standards compliant(MIL-C-24308)

Left side mount	Right side mount

N4S0 - T30

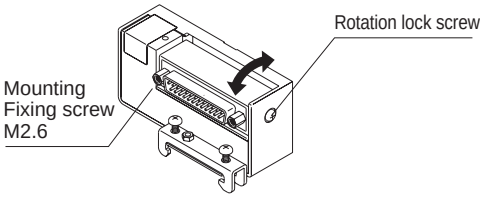

N4S0 - T30R

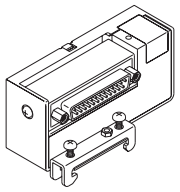

G Flat cable connector block (T50/T50R)

*MIL standards compliant(MIL-C-83503)

Left side mount	Right side mount

N4S0 - T50

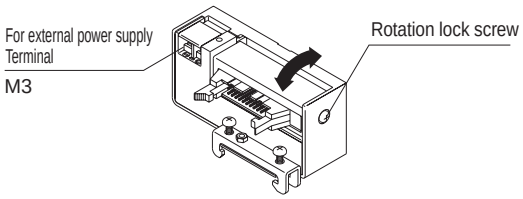

N4S0 - T50R

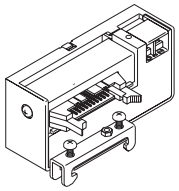

H Common terminal box (T10, T11)

Left side mount	Right side mount

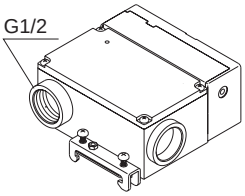

Solenoid 14 points
T10/T10R



Solenoid 24 points
T11/T11R



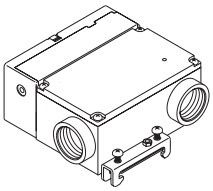

N4S0 - T10

Code	Description
T10	M3 screw fastening terminal block for left side
T11	Press fastening terminal block for left side

N4S0 - T10R

Code	Description
T10R	M3 screw fastening terminal block for right side
T11R	Press fastening terminal block for right side

Ⓘ Regulator equipped block

N4S0 - RA - LR - C6 - FL259661

N4S0 - RB - LR - C6 - FL259662

Model No.

Ⓐ Pressure adjustment knob direction

Ⓑ Air supply/pressure adjustment direction

Ⓒ Fitting size (*1)

Code	Description	Code	Description
Ⓐ Pressure adjustment knob direction			
RA	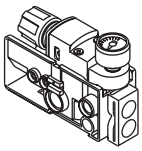	RB	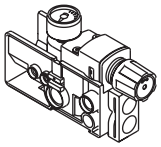
Ⓑ Air supply/pressure adjustment direction			
LR	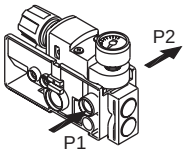	RL	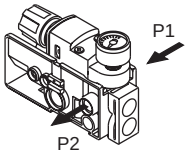
FR	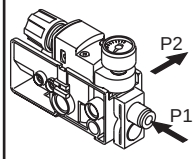	FL	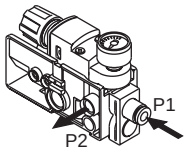

Code	Description	
Ⓒ Fitting size		
Blank	Plug (when air supply direction is LR, RL)	
C6	ø6 push-in fitting (straight)	
C8	ø8 push-in fitting (straight)	
CL6	ø6 push-in fitting (elbow)	Available on a made to order basis
CL8	ø8 push-in fitting (elbow)	

⚠ Note on model No. selection

*1: For the fittings, the straight is standard. The elbow is available as custom-order.
*2: When mounting a regulator block within the manifold, one or more supply and exhaust blocks for pilot air is necessary.
*3: Contact CKD when using the regulator block independently for external pressure control other than the manifold.

Discrete regulator model No.

RB500 - 00 M

Note: Consult with CKD when using options.

Applications (Consult with CKD for other applications.)

Application 1: Depressurization of internal main pressure

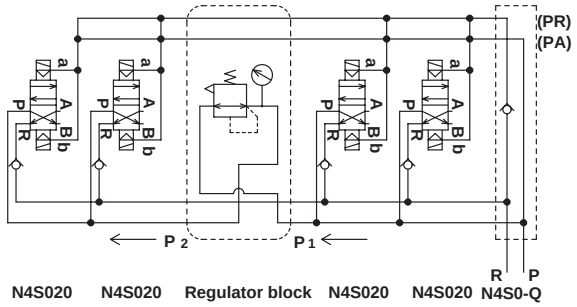

* Reducing the pressure (P = P_1) supplied from the supply and exhaust block

Application 2: Depressurization of external main pressure

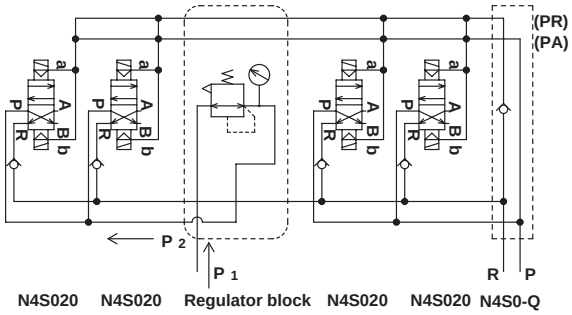

* Reducing the pressure (P ≠ P_1) supplied directly from the regulator block

J Related products

● Mounting rail

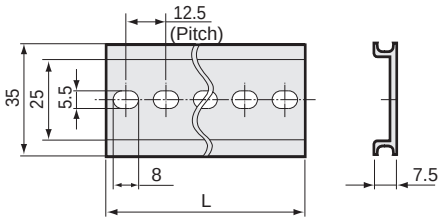

● Silencer (attachment)

SLW-H8
SLW-H6

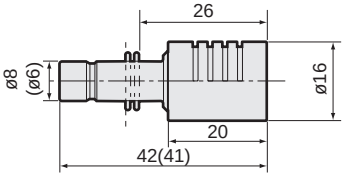

* Value within brackets for H6
Effective cross-sectional area 8.5 (7) mm²

● Blanking plug (attachment)

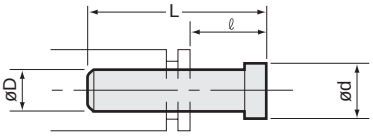

Model No.	D	L	ℓ	d
GZP4-B	ø4	27	16	6
GZP6-B	ø6	29	17	8
GZP8-B	ø8	33	17.5	10

● Push-in fitting tube remover

N4S0-EOT4-6

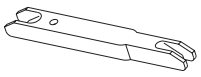

● Push-in cartridge fitting

N4S0 - JOINT - C4

Dedicated for valve block and supply/exhaust block PA port.
Cannot be used for ports P and R of supply and exhaust block.

Code	Dimensions
C4 C6	Push-in cartridge fitting for ø4, ø6 tube
CL4 CL6	Short radial push-in cartridge fitting for ø4, ø6 tube
CLL4 CLL6	Long radial push-in cartridge fitting for ø4, ø6 tube
CM5	The rotation-stop plate dedicated for the M5 cartridge is required.
CMP	Rotation-stop plate dedicated for M5 cartridge
CPG	Plug cartridge
CMB	Cartridge plug for M5 cartridge
M5-4-KIT	M5 cartridge (x2) Rotation-stop plate for M5 cartridge (x1)
M5-3-KIT	M5 cartridge (x1) Cartridge plug for M5 cartridge (x1) rotation-stop plate for M5 cartridge (x1)

● Push-in cartridge fitting for supply and exhaust block

N4S0 - Q - JOINT - 8

For pilot pressure air supply (for PA), use the products for valve block shown above.

Code	Dimensions
8	Push-in cartridge fitting for ø8 tube
6	Push-in cartridge fitting for ø6 tube
8L	Short radial push-in cartridge fitting for ø8 tube
6L	Short radial push-in cartridge fitting for ø6 tube
8LL	Long radial push-in cartridge fitting for ø8 tube
6LL	Long radial push-in cartridge fitting for ø6 tube
MP	Port plug for P and R

Serial transmission: Wiring method

T6G1 serial transmission

- The device unit's output No. differs with the manufacturer. The manifold internal connector pin No. and the manifold solenoid correspond as shown below.
- Station manifolds are set in order from the left with the piping port facing forward regardless of the wiring block position.
- Internal connectors are wired in order, so there may be some blank numbers depending on the number of manifold stations. These blank outputs cannot be used to drive other than the solenoid manifold in use.
- The working power is 24 VDC.
- A device unit for each communication system is used. Contact CKD for usable PLC models, host unit model numbers and communication system specifications.
- Output number differs by PLC manufacturer, but the function assignment is the same. Arrange using connectors and the triangular mark (▼) in the table below for reference. The ▼ mark is the reference for both plug and socket.

If a valve side signal array other than the standard array is necessary, specify in the manifold specifications sheet by placing an ab marking on the wiring specifications. In addition, when changing the expansion station valve specifications, it will be necessary to install installation cables. Specify by placing a circle on the wiring specification terminal No.

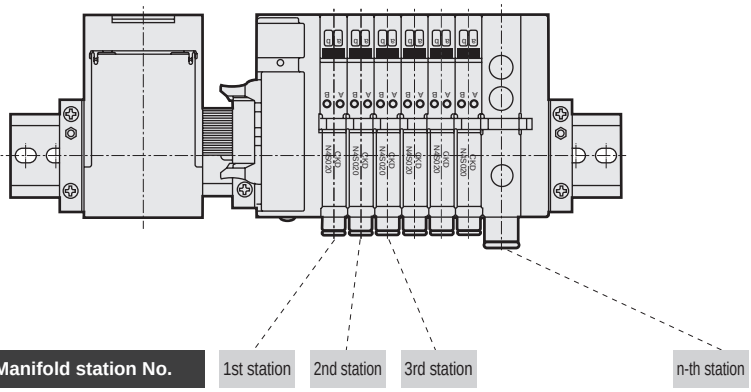

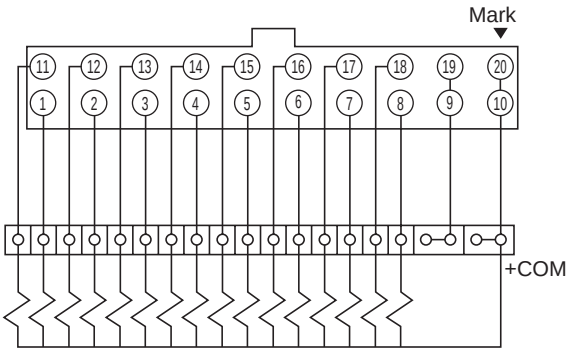

[Internal circuit]

Connector pin array (example) of wiring method T6G1

● For single solenoid valve
(Supports up to manifold max. station number of 16 stations)

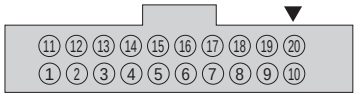

Pin No.	11	12	13	14	15	16	17	18	19	20
Valve No.	9a	10a	11a	12a	13a	14a	15a	16a		+COM
Pin No.	**1**	**2**	**3**	**4**	**5**	**6**	**7**	**8**	**9**	**10**
Valve No.	1a	2a	3a	4a	5a	6a	7a	8a		+COM

● For double solenoid valve
(Supports up to manifold max. station number of 8 stations)

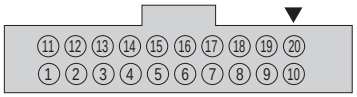

Pin No.	11	12	13	14	15	16	17	18	19	20
Valve No.	5a	5b	6a	6b	7a	7b	8a	8b		+COM
Pin No.	**1**	**2**	**3**	**4**	**5**	**6**	**7**	**8**	**9**	**10**
Valve No.	1a	1b	2a	2b	3a	3b	4a	4b		+COM

● For mixed use (single/double mixture)
(Supports max. No. of solenoid valves up to 16 points)

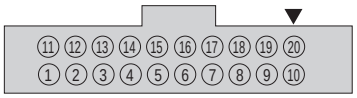

Pin No.	11	12	13	14	15	16	17	18	19	20
Valve No.	7a	7b	8a	9a	10a	10b	11a	11b		+COM
Pin No.	**1**	**2**	**3**	**4**	**5**	**6**	**7**	**8**	**9**	**10**
Valve No.	1a	2a	3a	3b	4a	4b	5a	6a		+COM

*1: The numerals of valve numbers 1a, 1b, 2a, 2b ... indicate the order of stations first station, second station... and the letters "a" and "b" indicate the "a side" solenoid and "b side" solenoid, respectively.

Correspondence of output No. and connector pin No.

Output No.	0	1	2	3	4	5	6	7	8	9	10	11	12	13	14	15
Connector pin	1	2	3	4	5	6	7	8	11	12	13	14	15	16	17	18

● PLC compatibility table for serial transmission

Model No.	Maker (recommended organization)	Comm system name	Host unit model No.
T6G1	CC-Link Partner Association (CLPA)	CC-Link	Connected to compatible CC-Link master
	Mitsubishi Electric Corporation		QJ61BT11N A1SJ61QBT11 A1SJ61BT11

Note: For details on master units and models not listed above, contact the PLC manufacturer.

Common terminal block: Wiring method

T10/T11 common terminal block

With the common terminal box, the common wiring is internal processed beforehand. In addition, the terminal numbers (listed on the terminal block covers) correspond to the manifold solenoids as shown below. Station manifolds are set in order from the left with the piping port facing forward regardless of the wiring block position.

Cautions for common terminal block

When using the T10 outside of the board, be sure to prepare a cover as necessary.
With the common terminal block, as common wires are processed internally beforehand, in the following cases, the number of steps for the wiring may increase or there may be cases when it is not possible to perform the wiring.

- Unify the manifold power supply.
- When using the independent contact PLC output unit, wire the common wires at the contact section.

Wiring method

● In case of DC output unit (NPN output)

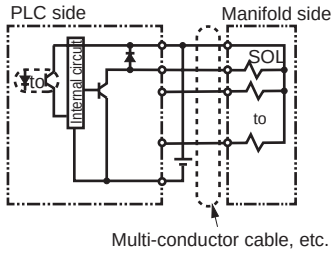

Multi-conductor cable, etc.

● In case of DC output unit (PNP output)

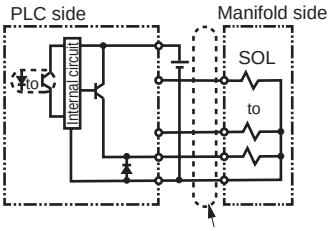

Multi-conductor cable, etc.

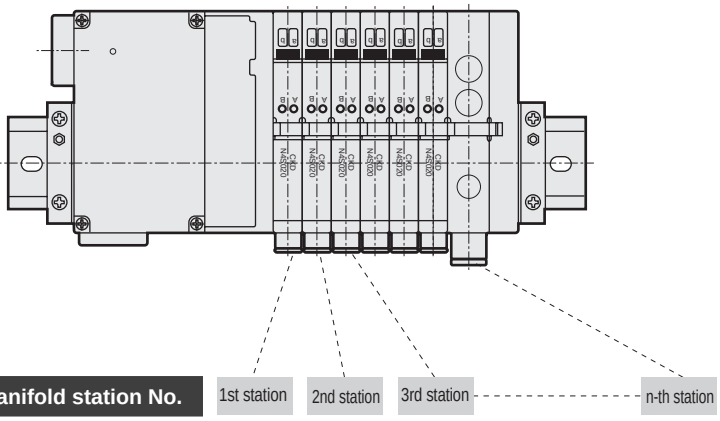

T10 Manifold internal wiring

● Max. No. of solenoid valves 14 points

Terminal layout drawing

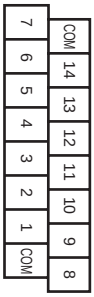

Terminal block No. / Polarity

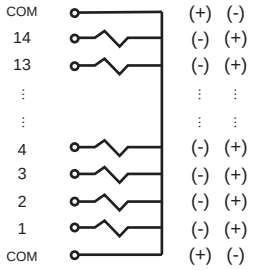

T11 Manifold internal wiring

● Max. No. of solenoid valves 24 points

Terminal layout drawing

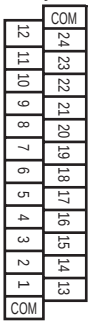

Terminal block No. / Polarity

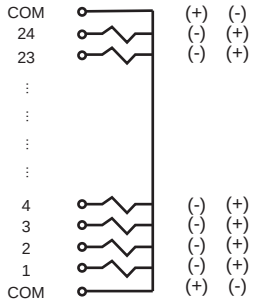

D sub-connector: Wiring method T30

T30 Connectors

The connector used for T30/T31 wiring, called a D sub-connector, is used widely for FA and OA devices. The 25P in particular is also an RS-232-C Standards designated connector, used for personal computer communication. The manifolds station numbers are set in order from the left with the piping port facing forward regardless of the wiring block position.

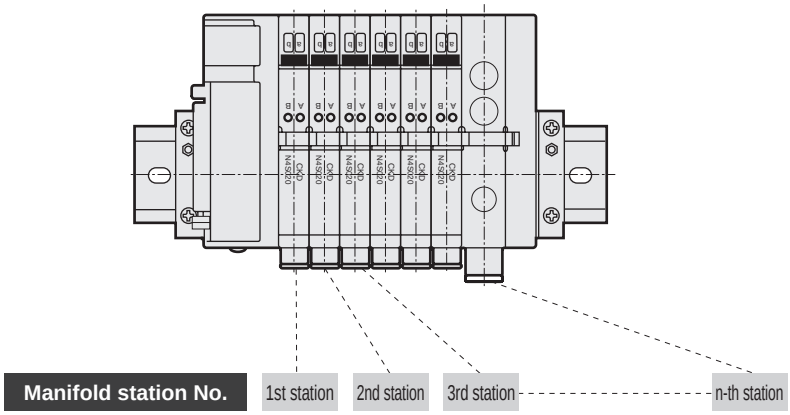

Connector T30 Precautions

(1) Signal arrays of the PLC output unit must match signal arrays on the valve side.
(2) The working power is 12/24 VDC dedicated.
(3) A voltage drop may occur due to simultaneous energizing or cable length. Confirm that the voltage drop for the solenoid is within 10% of the rated voltage.

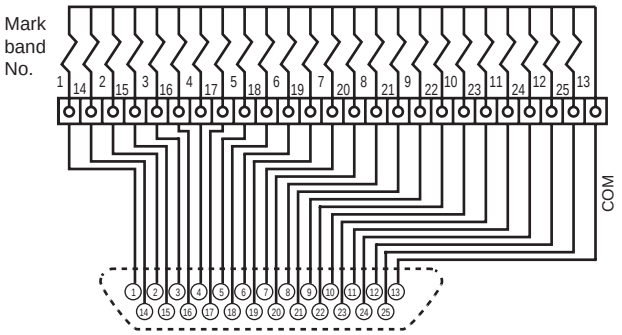

[Internal circuit]

Wiring method T30 connector pin layout (example)

*1: The numerals of valve numbers 1a, 1b, 2a, 2b ... indicate the order of stations first station, second station... and the letters “a” and “b” indicate the “a side” solenoid and “b side” solenoid, respectively.

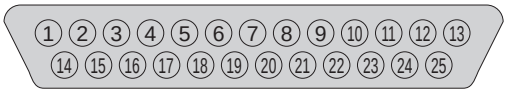

● For single solenoid valve
(supports max. manifold No. up to 24 points)

Pin No.	1	2	3	4	5	6	7	8	9	10	11	12	13
Valve No.	1a	3a	5a	7a	9a	11a	13a	15a	17a	19a	21a	23a	COM
Pin No.	**14**	**15**	**16**	**17**	**18**	**19**	**20**	**21**	**22**	**23**	**24**	**25**	
Valve No.	2a	4a	6a	8a	10a	12a	14a	16a	18a	20a	22a	24a	

● For double solenoid valve
(supports max. manifold No. up to 12 points)

Pin No.	1	2	3	4	5	6	7	8	9	10	11	12	13
Valve No.	1a	2a	3a	4a	5a	6a	7a	8a	9a	10a	11a	12a	COM
Pin No.	**14**	**15**	**16**	**17**	**18**	**19**	**20**	**21**	**22**	**23**	**24**	**25**	
Valve No.	1b	2b	3b	4b	5b	6b	7b	8b	9b	10b	11b	12b	

● For mixed use (single/double mixture)
(supports max. solenoid No. up to 24 points)

Pin No.	1	2	3	4	5	6	7	8	9	10	11	12	13
Valve No.	1a	3a	4a	5a	7a	8a	10a	11b	12b	14a	16a	17a	COM
Pin No.	**14**	**15**	**16**	**17**	**18**	**19**	**20**	**21**	**22**	**23**	**24**	**25**	
Valve No.	2a	3b	4b	6a	7b	9a	11a	12a	13a	15a	16b	17b	

How to order cable with D sub-connector

N4T - CABLE - D 0 0 - 1

* Each pneumatic valve model can be used for D sub-connector T30/T31.

Ⓐ User interface

Ⓑ Cable length

Code	Model N4T
Ⓐ User side connection	
0	Cut only
1	With round terminal for M3.5 screw
Ⓑ Cable length	
1	1 m
3	3 m
5	5 m

D sub-connector terminal No. and conductor

● N4T-CABLE-D00-Ⓑ

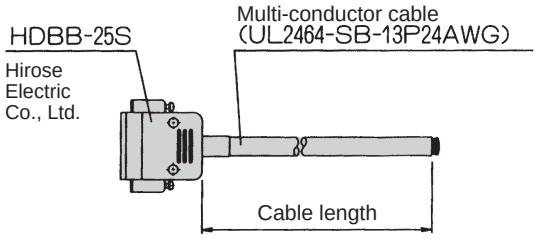

D sub-connector terminal No.		1	2	3	4	5	6	7	8	9	10	11	12	13
Core identification	Insulator color	Orange	Orange	Yellow	Yellow	Green	Green	Gray	Gray	White	White	Orange	Orange	Yellow
	Mark	1 point	1 point	1 point	1 point	1 point	1 point	1 point	1 point	1 point	1 point	2 points	2 points	2 points
	Mark color	Black	Red	Black	Red	Black	Red	Black	Red	Black	Red	Black	Red	Black
D sub-connector terminal No.		**14**	**15**	**16**	**17**	**18**	**19**	**20**	**21**	**22**	**23**	**24**	**25**	
Core identification	Insulator color	Yellow	Green	Green	Gray	Gray	White	White	Orange	Orange	Yellow	Yellow	Green	
	Mark	2 points	2 points	2 points	2 points	2 points	2 points	2 points	3 points	3 points	3 points	3 points	3 points	
	Mark color	Red	Black	Red	Black	Red	Black	Red	Black	Red	Black	Red	Black	

● N4T-CABLE-D01-Ⓑ

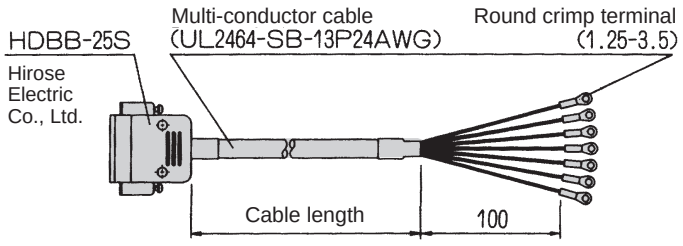

D sub-connector terminal No.		1	2	3	4	5	6	7	8	9	10	11	12	13
Core identification	Insulator color	Orange	Orange	Yellow	Yellow	Green	Green	Gray	Gray	White	White	Orange	Orange	Yellow
	Mark	1 point	1 point	1 point	1 point	1 point	1 point	1 point	1 point	1 point	1 point	2 points	2 points	2 points
	Mark color	Black	Red	Black	Red	Black	Red	Black	Red	Black	Red	Black	Red	Black
Mark tube No.		1	2	3	4	5	6	7	8	9	10	11	12	13
D sub-connector terminal No.		**14**	**15**	**16**	**17**	**18**	**19**	**20**	**21**	**22**	**23**	**24**	**25**	
Core identification	Insulator color	Yellow	Green	Green	Gray	Gray	White	White	Orange	Orange	Yellow	Yellow	Green	
	Mark	2 points	2 points	2 points	2 points	2 points	2 points	2 points	3 points	3 points	3 points	3 points	3 points	
	Mark color	Red	Black	Red	Black	Red	Black	Red	Black	Red	Black	Red	Black	
Mark tube No.		14	15	16	17	18	19	20	21	22	23	24	25	

* Up to 24 points can be used. Cut the wires for surplus points before use.

Flat cable connector: Wiring method

T50 Connectors

The connector used for T50 wiring method complies with MIL Standards (MIL-C-83503). Wiring work is simplified with the pressure welded flat cable. Pin numbers are assigned differently based on the PLC manufacturer, but the function assignment is the same. Layout using connectors and the triangular mark (▼) shown below as a reference. The ▼ mark is the reference for both plug and socket. The manifolds station numbers are set in order from the left with the piping port facing forward regardless of the wiring block position.

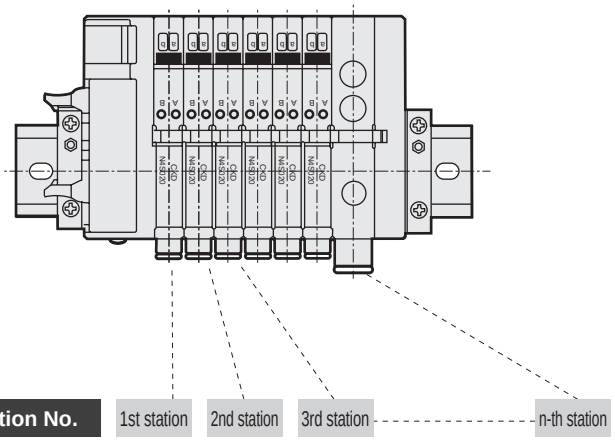

Connector T50 Precautions

(1) Signal arrays of the PLC output unit must match signal arrays on the valve side. Direct connections with the PLC are limited. Use the dedicated cable for each PLC manufacturer.
(2) The working power is 12/24 VDC dedicated.
(3) When connecting the T50 to a general output unit, use the + terminal (20, 10) of the 20P connector as the + side common, and use the NPN transistor output open collector for the drive circuit.
(4) Never connect this manifold to the input unit, as major failures could occur in this device and in peripherals. Be sure to connect the manifold to the output unit.
(5) A voltage drop may occur due to simultaneous energizing or cable length. Confirm that the voltage drop for the solenoid is within 10% of the rated voltage.

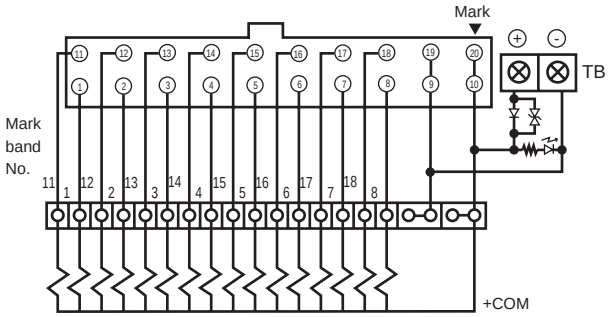

[Internal circuit]

Wiring method T50 connector pin layout (example)

*: The numerals of valve numbers 1a, 1b, 2a, 2b ... indicate the order of stations first station, second station... and the letters “a” and “b” indicate the “a side” solenoid and “b side” solenoid, respectively.

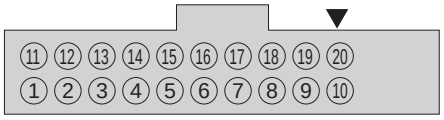

● For single solenoid valve
(supports max. manifold No. up to 16 points)

Pin No.	11	12	13	14	15	16	17	18	19	20
Valve No.	9a	10a	11a	12a	13a	14a	15a	16a	- Power supply	+ Power supply
Pin No.	**1**	**2**	**3**	**4**	**5**	**6**	**7**	**8**	**9**	**10**
Valve No.	1a	2a	3a	4a	5a	6a	7a	8a	- Power supply	+ Power supply

● For double solenoid valve
(supports max. manifold No. up to 8 points)

Pin No.	11	12	13	14	15	16	17	18	19	20
Valve No.	5a	5b	6a	6b	7a	7b	8a	8b	- Power supply	+ Power supply
Pin No.	**1**	**2**	**3**	**4**	**5**	**6**	**7**	**8**	**9**	**10**
Valve No.	1a	1b	2a	2b	3a	3b	4a	4b	- Power supply	+ Power supply

● For mixed use (single/double mixture)
(supports max. solenoid No. up to 16 points)

Pin No.	11	12	13	14	15	16	17	18	19	20
Valve No.	7a	7b	8a	9a	10a	10b	11a	11b	- Power supply	+ Power supply
Pin No.	**1**	**2**	**3**	**4**	**5**	**6**	**7**	**8**	**9**	**10**
Valve No.	1a	2a	3a	3b	4a	4b	5a	6a	- Power supply	+ Power supply

How to disassemble/assemble block manifold

CAUTION: Be sure to turn power OFF and release pressure before increasing or decreasing the manifolds.

The procedures for changing the valve blocks, replacing the valve blocks due to service life, etc., adding the supply and exhaust blocks and changing/increasing the specifications using various pressure supply devices are explained below. Refer to the individual Instruction Manuals for details.
Turn OFF power and stop the air pressure source before starting the disassembly work. When the manifold has been disassembled and assembled, if the connection key is not correctly inserted between the blocks or if the wiring and end block screws are insufficiently tightened, air could leak. Confirm that the connection keys are correctly inserted between the blocks and that the blocks are securely fixed onto the DIN rail before supplying air. CKD recommends using identification marking when disconnecting the A and B port piping.
Each valve block is connected with a common cable and from the wiring block, a signal input cable is connected to a, b of the valve block in a set order. Be sure to review the wiring connections upon block replacement.

Replacing the valve blocks

(1) Loosen the DIN rail fixing screw on the end block.
(2) Open the electric cover of the valve block you wish to replace and the blocks on both sides and remove the cable connector a, b from the wiring block and the common cable connector.

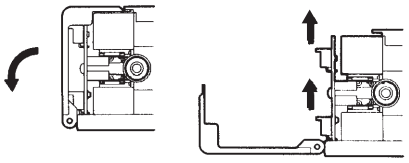

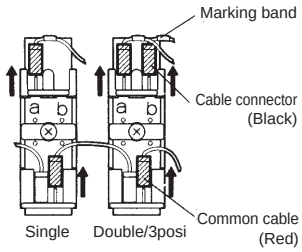

(3) Using a tool such as a flathead screwdriver, pull up the key connecting the valve block to be replaced and the blocks on both sides.

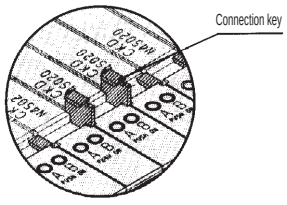

(4) Slide the block to the end block side, and provide a space of 10 mm on each side of the block to be replaced.

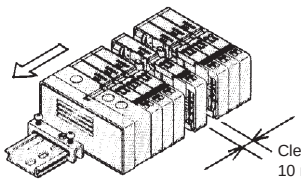

Sliding the valve block with force may cause the wires to break.
Please be careful.

(5) Lift up the block's wiring cover side, and pull toward the piping port side. The block will come off the DIN rail. Open the cover and place the wires through it.

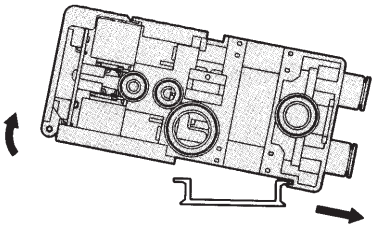

(6) Replace with a new block. Place the wiring cables through the block, engage the block bottom surface claws with the DIN rail from the port side, and place the block on the rail.
(7) Slide all of the blocks to the wiring block side so that there are no spaces between the blocks.
(8) Push the connecting key up to the groove on the top surface of the block.
(9) In order to prevent mistakes, attach the cable connectors a, b and the common cable connector back to their original state while checking the marking band numbers.

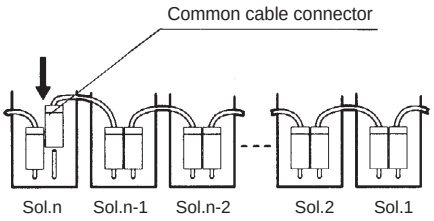

(10) Confirm that the end block's retainer claw is caught on both sides of the DIN rail, and then tighten the fixing screw with a screwdriver.
Appropriate tightening torque is 1.4 Nm.

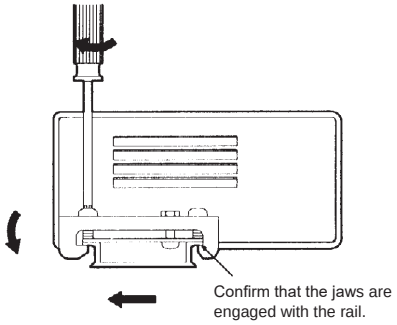

Increasing the valve blocks

(1) If there are plans to add more blocks, specify the need for expansion cables in the manifold specifications sheet. Otherwise, specify a spare valve block.
(2) When a spare is not available, it will be necessary to perform the wiring from the wiring block. Contact CKD separately.

Mounting the supply and exhaust block and partition block

(1) The blocks are added with the same procedures as replacing the valve blocks.
(2) Allow slack of the wiring block cables and common block cables inside the cover slit part of the wiring side of supply and exhaust blocks and partition blocks, and pass them through the cover.
(3) Take care, as the cable length may become insufficient due to expansion of blocks.

Replacing the cartridge fitting

(1) The blocks are separated with the same procedures as replacing the valve blocks.
(2) Using a tool such as a flathead screwdriver, remove the stopper inserted from the left side surface of the port of the block to be replaced and replace the cartridge fitting.
(3) Confirm that there is no dirt, etc., on the fitting's O-ring, and then set it in the original position.

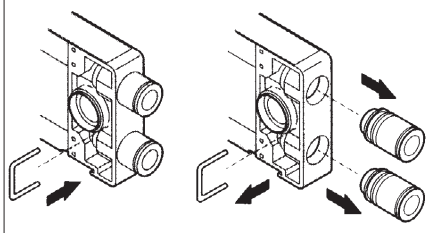

Checking after disassembly and assembly

Implement a check of the piping and a check of the wiring to confirm that they are correct. In particular, be careful of incorrect connections of the A, B-ports for piping and a, b for wiring.

How to disassemble/assemble regulator and regulator block

Caution: Be sure to turn power OFF and release the pressure before performing the following work.

The procedures for adding, disassembling and assembling regulator bodies and regulator blocks, due to specifications change or service life, are explained below. Contact CKD for details.

After assembly, confirm that the connection key between blocks and the fitting stopper pin for the regulator block are securely assembled before use. In addition, for details on handling of the valve block, refer to the separate instruction manual for MN4S0.

Regulator replacement

(1) Loosen the regulator mounting screw, and lift the regulator body upward and off.
(2) After replacing the regulator, confirm that the gasket has not deviated from the block grooves, and assemble in the original state. The appropriate tightening torque for the regulator body mounting screw is 0.5 to 0.8 N·m.
(Note) In cases when the regulator has been reassembled with the knob facing the opposite side of the original position, it may not be possible to reduce pressure. If a regulator has been removed, assemble the components back in their original state.

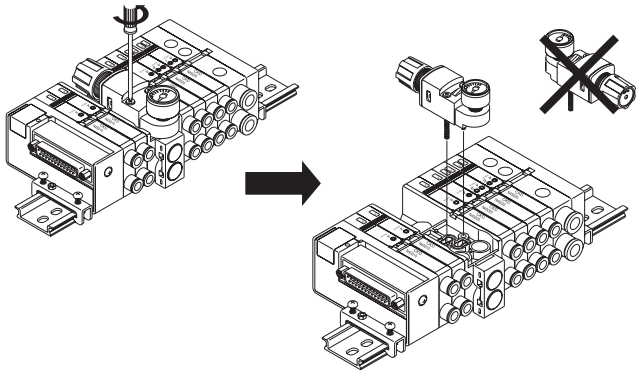

Regulator block replacement

(1) Remove the regulator body. (Refer to the above for how to remove)
(2) Open the wiring block cover of the regulator block you wish to replace and the blocks on both sides, and remove the cable connector a (and b) of the (n+1)-th valve block station and the common cable connector.

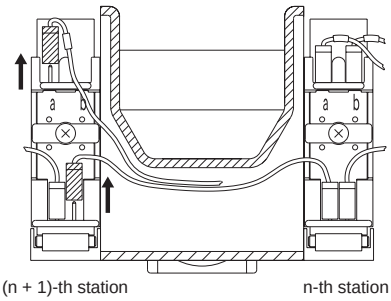

(n + 1)-th station n-th station

(3) Using a tool such as a flathead screwdriver, pull up the key connecting the regulator block and the blocks on both sides.

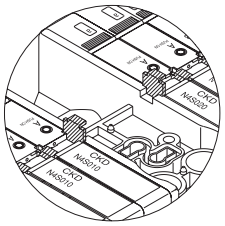

(4) Loosen the DIN rail fixing screw on the end block.
(5) Slide the block to the end block side, and provide a space of 10 mm on each side of the regulator block to be replaced.

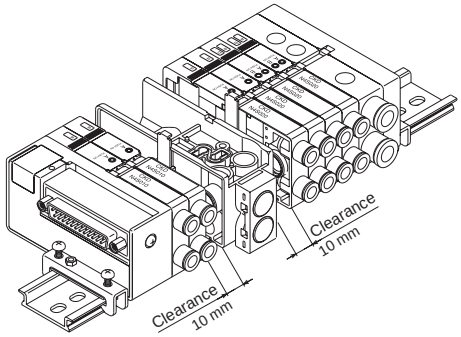

(6) Lift up the side opposite the block piping port, and pull toward the piping port side to remove the block from the DIN rail. [Figure below (1)→(3)]

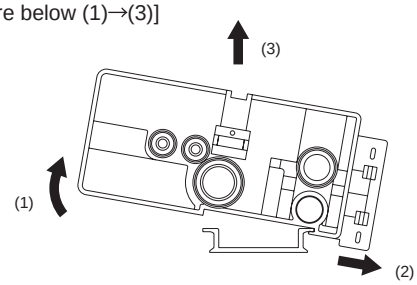

(7) Replace the block, and mount the blocks onto the DIN rail in the opposite order of (6).
(8) Slide all of the blocks to the wiring block side and assemble so that there are no spaces between the blocks.
(9) Push the connecting key up to the groove on the top surface of the block.
(10) In order to prevent mistakes, attach the cable connectors a (and b) and the common cable connector back to their original state while checking the marking band numbers.
(11) Confirm that the end block's retainer claw is caught on both sides of the DIN rail, and then tighten the fixing screw with a screwdriver. The tightening torque of band fixing screw is 1.4 to 1.5 N·m.

Regulator block cartridge fitting replacement

(1) The blocks are separated with the same procedures as "Regulator block replacement".
(2) Using a tool such as a flathead screwdriver, remove the stopper pin inserted from the right side of the block where the fitting needs replacing, and replace the fitting. {Figure below (1)→(2)}
(3) Confirm that there is no dirt, etc., on the fitting's O-ring, and then assemble it in the original position.

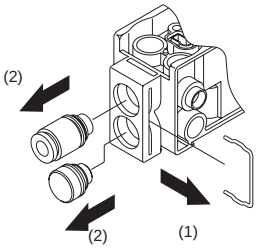

MN3S0/MN4S0 Series

How to fill out block manifold specifications sheet

● Manifold model No. (example) Refer to pages 1209 to 1215 for model No. per component.

MN$\frac{3}{4}$S0 8 0 - CX - MX T50 - 7 - 3

DIN rail mount | Solenoid position | Port size | Manual override | Wiring method | Valve block station No. | Voltage

Part name	Model No. \ Installation position	1	2	3	4	5	6	7	8	9	10	11	12	13	14	15	16	17	18	19	20	21	22	23	24	25	Qty.
Wiring block	N4S0- T50	○																									1
Valve block	N4S0 1 0- C4 - M1			○	○	○	○																				4
	N4S0 2 0- C6 -								○	○																	2
	N4S0 4 0- C6 -										○																1
	N3S0 0- -																										
Supply and exhaust block	N4S0-Q 8											○															1
	N4S0-Q Z - 8		○																								1
Partition block	N4S0- (*1)							S																			1
End block	N4S0-E												○														1

Mounting rail	Accessory				
L_2 =	Blanking plug	GZP4-B		Silencer	SLW-H8
	Blanking plug	GZP6-B		Cable with D sub-connector	N4T-CABLE-DO□-□
	Blanking plug	GZP8-B		Push-in fitting tube remover (standard attachment)	□ Check if not needed

(*1) When using a partition block, list the model No. SA, S, SP, or SE for the installation position No.

Preparing manifold specifications sheet

● Complete from the left end, with the piping port facing forward.
(Write the block model numbers and positions you determined referring to the block configurations (pages 1209 to 1215).)
● Write the total number of blocks specified in the quantity field at the table far right.
● Indicate the quantity of required accessories.
● Indicate the mounting rail length. (Fill in only when a length other than the standard length is required.)
● As there are manifold specifications sheets for each of the various series, fill in the form for the corresponding specifications.

·MN$\frac{3}{4}$SO ..... page 1225
·MT$\frac{3}{4}$SO ..... page 1226
·MN$\frac{3}{4}$SO (regulator block equipped) ..... page 1227

Obtaining the DIN rail length

Manifold length L_1 = (11xn) + (16xm) + (6xℓ) + 57 (Wiring method T30, T50)
= (11xn) + (16xm) + (6xℓ) +107 (Wiring method T10, T11)
= (11xn) + (16xm) + (6xℓ) +128.5 (Wiring method T6G1)
= (11xn) + (16xm) + (6xℓ) +42 (Wiring method individual wiring)

n: number of valve blocks ℓ: number of partition blocks m: number of supply and exhaust blocks

DIN rail length $L_2 = L_2' \times 12.5$

$L_2' = \frac{L_1+40}{12.5}$ ⇨Round decimals up to integer, Rail mounting pitch $L_3 = L_2 - 12.5$

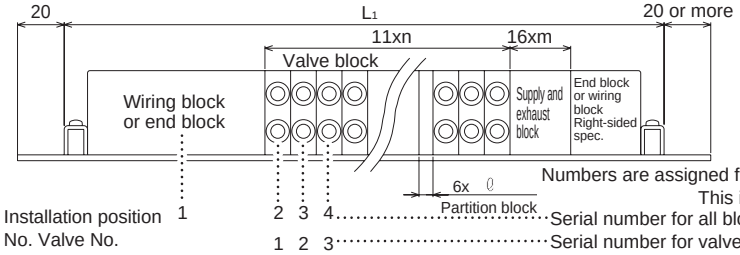

Numbers are assigned from the left with the port facing forward.
This is the same with the wiring block right-sided specifications.
Serial number for all blocks.
Serial number for valve blocks only.

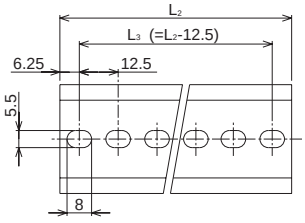

Add the increase when expanding blocks.
With the standard configuration, it is possible to expand 2 stations of valve blocks.

Reference circuit diagram

With the above manifold model No. (listed example) (simplified circuit diagram)

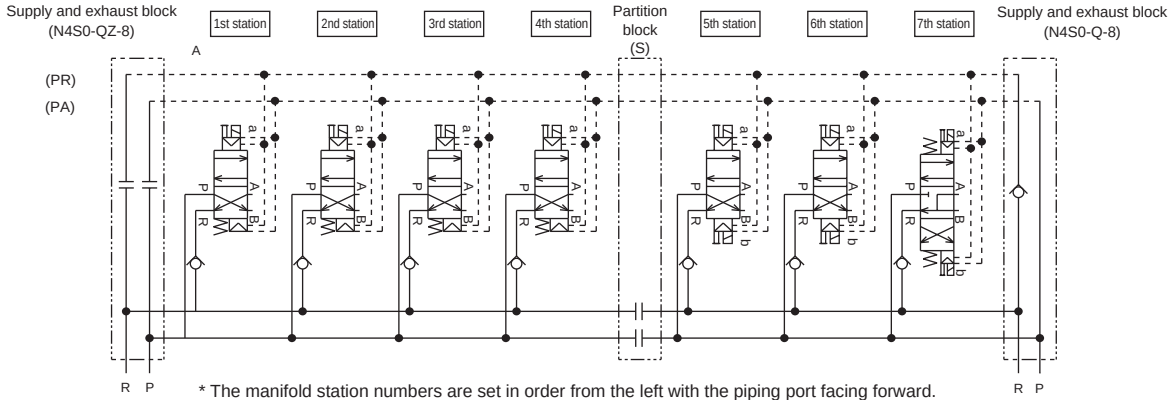

* The manifold station numbers are set in order from the left with the piping port facing forward. (Wiring blocks, supply and exhaust blocks, partition block, and end block are not included in the manifold station No.)

MN3S0/MN4S0 Series

How to fill out wiring specifications sheet

* This is not required with standard wiring.

● Precaution regarding wiring specifications

(1) Wiring blocks and valve blocks are processed inside beforehand with common wiring.
(2) According to the wiring methods of T10, T11, T30, and T50, the connector pins or terminal numbers are configured in correspondence with solenoid numbers. List specifications upon reviewing the precautions for each wiring method. * Consult with CKD for product specifications other than the standard wiring specifications.
(3) When it is expected that there will be a change of expansion valve specifications, an expansion cable will be necessary in advance. (With standard wiring, the unit will come with 2 expansion cables.)
Specify by placing a circle on each pin connector or terminal No. in the field for wiring specifications. (Refer to example)
In addition, a supply and exhaust block must be installed on the end block side as storage space for the expansion cables. In addition, in cases when it is necessary to install 5 or more cable lines, it is also necessary to prepare another set of supply and exhaust blocks. (As a supply and exhaust block for storage of the expansion cable, there is the “N4SO-QX-X” in which the P.R port is a plug sealing.) When the single has been switched to the double: As in the following example, mark a circle on b and the terminal No. together with the a, b table of the valve No. In this case, expansion of supply and exhaust blocks will not be necessary even when there are 5 or more units.

* Example (filled out in accordance with the manifold specifications sheet on the previous page.)

Connector pin or terminal block No.					Valve No.													
T10	**T11**	**T30**	**Ⓣ50Ⓞ**	T	1	2	3	4	5	6	7	8	9	10	11	12	13	14
1	1	1	1	1	a													
2	2	14	2	2		a												
3	3	2	3	3			a											
4	4	15	4	4				a										
5	5	3	5	5					a									
6	6	16	(6)	6					ⓑ				Spare cable					
7	7	4	7	7						a								
8	8	17	(8)	8						ⓑ			Spare cable					
9	9	5	9 -power supply	9														
10	10	18	10 + power supply	10														
11	11	6	11	11							a							
12	12	19	12	12							b							
13	13	7	(13)	13								○						
14	14	20	(14)	14								○	Spare cable					
COM	15	8	(15)	15								○						
COM	16	21	(16)	16								○						
	17	9	17	17														
	18	22	18	18														
	19	10	19 -power supply	19														
	20	23	20 + power supply	20														
	21	11		21														

For the spare cable after final wiring, list upon shifting by 1 row.

With standard wiring, the unit will come with 2 expansion cables.

MN 3/4 S0 DIN rail mounting Block manifold specifications sheet

Issued / /

Company

Contact

Order No.

● Contact ● Quantity set(s) ● Delivery date /

Slip No.	Order No.

● Manifold model No.

MN 3/4 S0 [ ] 0- [ ] - [ ] [ ] - [ ] - [ ]

DIN rail mount | Solenoid position | Port size | Manual override | Wiring method | Valve block station No. | Voltage

When filling in this field, select the model No. from “Block configurations” (pages 1209 to 1215).

Part name (Page)	Model No. \ Installation position	1	2	3	4	5	6	7	8	9	10	11	12	13	14	15	16	17	18	19	20	21	22	23	24	25	26	27	28	29	30	31	Qty.
Wiring block (pages 1212, 1213)	N4S0- [ ]																																
Valve block (page 1211)	N4S0 [ ] 0- [ ] - [ ]																																
	N4S0 [ ] 0- [ ] - [ ]																																
	N4S0 [ ] 0- [ ] - [ ]																																
	N4S0 [ ] 0- [ ] - [ ]																																
	N4S0 [ ] 0- [ ] - [ ]																																
	N3S0 [ ] 0- [ ] - [ ]																																
	N3S0 [ ] 0- [ ] - [ ]																																
Supply and exhaust block (page 1210)	N4S0-Q [ ] - [ ]																																
	N4S0-Q [ ] - [ ]																																
Partition block (page 1211)	N4S0-S [ ]																																
	N4S0-S [ ]																																
End block (page 1210)	N4S0-E [ ]																																
	N4S0-E [ ]																																

Mounting rail (page 1215)	Accessory								
L_2 = [ ] (How to determine the length: page 1223)	Blanking plug	GZP4-B	[ ]	Silencer	SLW-H8	[ ]	Cable with D sub-connector	N4T-CABLE-DO□-□	
	Blanking plug	GZP6-B	[ ]	Silencer	SLW-H6	[ ]	Push-in fitting tube remover (Standard attachment)		☐ Not required (Check)
	Blanking plug	GZP8-B	[ ]			[ ]			

● Wiring specification sheet (Not required for standard wiring. Complete these specifications when specifying the wiring order and expansion cables.)

Connector pin or terminal block No.					Valve No.																										
T10	T11	T30	T50	T	1	2	3	4	5	6	7	8	9	10	11	12	13	14	15	16	17	18	19	20	21	22	23	24	25	26	27
1	1	1	1	1																											
2	2	14	2	2																											
3	3	2	3	3																											
4	4	15	4	4																											
5	5	3	5	5																											
6	6	16	6	6																											
7	7	4	7	7																											
8	8	17	8	8																											
9	9	5	9 -power supply	9																											
10	10	18	10 + power supply	10																											
11	11	6	11	11																											
12	12	19	12	12																											
13	13	7	13	13																											
14	14	20	14	14																											
COM	15	8	15	15																											
COM	16	21	16	16																											
	17	9	17	17																											
	18	22	18	18																											
	19	10	19 -power supply	19																											
	20	23	20 + power supply	20																											
	21	11		21																											
	22	24		22																											
	23	12		23																											
	24	25		24																											
	COM	13COM		25																											
	COM			26																											

When T50 wiring is used, connector pin numbers 9, 10, 19, and 20 cannot be specified, because they are used for the external input power supply.

MT 3/4 S0 Direct mounting Block manifold specifications sheet

Issued / /

Company

Contact

Order No.

● Contact ● Quantity set(s) ● Delivery date /

Slip No.	Order No.

● Manifold model No.

MT 3/4 S0 [ ] 0 - [ ] - [ ] [ ] - 8 - [ ]

Direct mounting / Solenoid position / Port size / Manual override / Wiring method / Valve block station No. / Voltage

When filling in this field, select the model No. from “Block configurations” (pages 1209 to 1215).

Product name (page)	Model No. \ Installation position	1	2	3	4	5	6	7	8	9	10	11	Quantity Volume
Wiring block (page 1213)	N4S0- [ ]												
Valve block (page 1211)	N4S0 [ ] 0- [ ] - [ ]												
	N4S0 [ ] 0- [ ] - [ ]												
	N4S0 [ ] 0- [ ] - [ ]												
	N4S0 [ ] 0- [ ] - [ ]												
	N4S0 [ ] 0- [ ] - [ ]												
	N3S0 [ ] 0- [ ] - [ ]												
	N3S0 [ ] 0- [ ] - [ ]												
Supply and exhaust block (page 1210)	N4S0-Q [ ] - [ ]												
End block (page 1210)	N4S0-E [ ]												
Accessories (page 1215)	Blanking plug GZP4-B [ ]			Silencer SLW-H8			Cable with D sub-connector N4T-CABLE-DO□-□						
	Blanking plug GZP6-B [ ]			Silencer SLW-H6			Push-in fitting tube remover (Standard attachment)					□ Not required (Check)	
	Blanking plug GZP8-B [ ]												

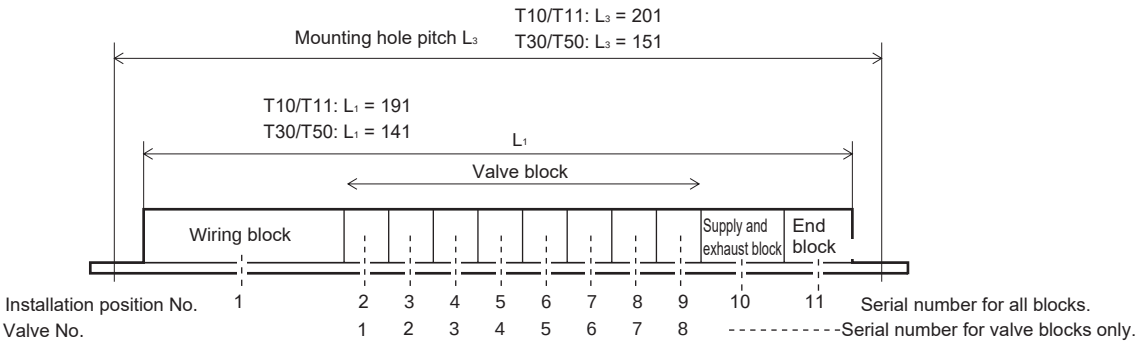

● Wiring specification sheet (Not required for standard wiring)

Connector pin or terminal block No.					Valve No.							
T10	T11	T30	T50		1	2	3	4	5	6	7	8
1	1	1	1	1								
2	2	14	2	2								
3	3	2	3	3								
4	4	15	4	4								
5	5	3	5	5								
6	6	16	6	6								
7	7	4	7	7								
8	8	17	8	8								
9	9	5	9 -power supply	9								
10	10	18	10 + power supply	10								
11	11	6	11	11								
12	12	19	12	12								
13	13	7	13	13								
14	14	20	14	14								
COM	15	8	15	15								
COM	16	21	16	16								
	17	9	17	17								
	18	22	18	18								
	19	10	19 -power supply	19								
	20	23	20 + power supply	20								
	21	11		21								
	22	24		22								
	23	12		23								
	24	25		24								
	COM	13COM		25								
	COM			26								

When T50 wiring is used, connector pin numbers 9, 10, 19, and 20 cannot be specified, because they are used for the external input power supply.

Manifold specifications sheet

MN4S0 DIN rail mounting Regulator block equipped block manifold specifications sheet

Issued / /

● Contact ● Quantity set(s) ● Delivery date /

Company

Contact

Slip No. | Order No.

Order No.

● Manifold model No.

MN$^{3}_{4}$S0 ☐ 0- ☐ -R- ☐ - ☐ - ☐ - ☐

DIN rail mount | Solenoid position | Port size | Wiring method | Valve block station No. | Voltage | Technical confirmation No.

When filling in this field, select the model No. from “Block configurations” (pages 1209 to 1215).

Part name	Installation position / Model No.	1	2	3	4	5	6	7	8	9	10	11	12	13	14	15	16	17	18	19	20	21	22	23	24	25	26	27	28	29	30	31	Qty.
Wiring block (pages 1212 and 1213)	N4S0- ☐																																
Valve block (page 1211)	N4S0 ☐ 0- ☐ - ☐																																
	N4S0 ☐ 0- ☐ - ☐																																
	N4S0 ☐ 0- ☐ - ☐																																
	N4S0 ☐ 0- ☐ - ☐																																
	N4S0 ☐ 0- ☐ - ☐																																
	N3S0 ☐ 0- ☐ - ☐																																
	N3S0 ☐ 0- ☐ - ☐																																
Supply and exhaust block (page 1210)	N4S0-Q ☐ - ☐																																
	N4S0-Q ☐ - ☐																																
Partition block (page 1211)	N4S0-S ☐																																
	N4S0-S ☐																																
End block (page 1210)	N4S0-E ☐																																
	N4S0-E ☐																																
Regulator block (page 1214)	N4S0-RA- ☐ - ☐ -FL																																
	N4S0-RB- ☐ - ☐ -FL																																

Mounting rail (page 1215)		Accessory								
	L_2 = ☐ mm (How to determine the length: page 1223)		Blanking plug	GZP4-B	☐	Silencer	SLW-H6	☐	Cable with D sub-connector	N4T-CABLE-DO☐-☐
			Blanking plug	GZP6-B	☐	Silencer	SLW-H8	☐	Push-in fitting tube remover (Standard attachment)	☐ Not required (Check)
			Blanking plug	GZP8-B	☐					

● Wiring specification sheet (Not required for standard wiring. Complete these specifications when specifying the wiring order and expansion cables.)

Connector pin or terminal block No.					Valve No.																										
T10	T11	T30	T50	T	1	2	3	4	5	6	7	8	9	10	11	12	13	14	15	16	17	18	19	20	21	22	23	24	25	26	27
1	1	1	1	1																											
2	2	14	2	2																											
3	3	2	3	3																											
4	4	15	4	4																											
5	5	3	5	5																											
6	6	16	6	6																											
7	7	4	7	7																											
8	8	17	8	8																											
9	9	5	9- Power supply	9																											
10	10	18	10+ Power supply	10																											
11	11	6	11	11																											
12	12	19	12	12																											
13	13	7	13	13																											
14	14	20	14	14																											
COM	15	8	15	15																											
COM	16	21	16	16																											
	17	9	17	17																											
	18	22	18	18																											
	19	10	19- Power supply	19																											
	20	23	20+ Power supply	20																											
	21	11		21																											
	22	24		22																											
	23	12		23																											
	24	25		24																											
	COM	13 COM		25																											
	COM			26																											

[Precautions]

(1) Indicate the manual override and wiring method with the various block model numbers.
(2) When T50 wiring is used, connector pin numbers 9, 10, 19, and 20 cannot be specified, because they are used for the external power supply.
(3) Orders not marked with an indication that the order has been technically reviewed will be void. Be sure to place orders after the details thereof have been technically approved.

Technical confirmation No.

Approval	Inspection	Contact

Safety Precautions

Be sure to read this section before use.
Refer to Intro Page 59 for general precautions for using valves.

Product-specific cautions: PLC compatible reduced wiring 3, 4-port valve block manifold MN3S0/MN4S0 series

Design/selection

⚠ CAUTION

■ Working air quality

- Use compressed air that has been treated as clean air.
  (by means of a dryer, oil mist separator, or air filter of 5 μ, etc.)
  This is to prevent failure due to drainage, oil oxides, tar, foreign matter, or rust contained in the compressed air.
- Always implement flushing prior to installation of piping.
- For lubrication, no-lubrication is standard.
  When lubrication is required, use turbine oil Class 1 ISO VG32 or equivalent. In addition, use of different types of oil, excessive lubrication, or forgetting to lubricate after the unit has been lubricated once may cause failure of the solenoid valve.
- Service life may be shortened due to splashed lubricant when using ultra dry air.
- The response time in the field for product specifications is a value with no lubrication and a pressure of 0.5 MPa when the unit is energized. Lubricating the unit more than necessary may cause delayed operation.

■ Avoid using the unit in the following environments.

- Ambient temperature outside the range of 5 to 50˚C
- Places where the unit will be exposed to dripping water and/or coolant
- Places where there is a lot of dust
- Places exposed to salt winds or a corrosive gas atmosphere

  When use in such locations is unavoidable, protect the unit with a cover, etc.
  While use in a location exposed to direct sunlight may cause discoloration due to UV rays, this will not have an impact on the performance of the product.

Mounting, installation and adjustment

1. Installation

⚠ CAUTION

■ Do not use this product in an environment that will be exposed to vibration of 50 m/s^2 or more and/or shock of 300 m/s^2 or more.
This may cause malfunction.

■ Do not constrict the air supply piping.
Delayed operation may occur due to a temporary drop of the supplied pressure with simultaneous operation of multiple station numbers.

■ Do not use the cylinder port with atmosphere release.
Use the external pilot, as a drop in supplied pressure may cause defective operation.
(The lower limit pressure of the internal pilot is 0.2 MPa.)

■ Do not constrict the exhaust flow path.
Doing so may cause delayed response of the cylinders.
Adjust the speed between the cylinder and the valve.

■ Do not seal off the pilot exhaust flow path.
Always secure an exhaust flow path, as sealing off the pilot exhaust flow path may cause defective operation.

■ When suspending a cylinder midway with the 3-position all ports closed (N4S030), make sure that there is no leakage from the piping connections or inside the cylinder.
(Use a cylinder with brake when stopping accuracy is necessary or when leaving the unit for a long period of time.)

■ Avoid installation in a location with poor ventilation or heat radiation.
Although the surface temperature of the manifold will rise when being continuously energized, this is normal. However, make sure that the ambient temperature does not exceed 50°C.

■ When using the two 3-port valves integrated valve block, avoid use in cases when the main pressure will be less than or equal to the min. working pressure due to different pressure control within the manifold or use involving atmosphere release.

2. Applicable piping tube

⚠ CAUTION

■ Observe the following precautions when using nylon tubes or urethane tubes for piping material.

- Use flame-resistant tubes or metal steel pipes in an environment where spattering may occur.
- Use hydraulic hose when piping is for both hydraulic and pneumatic use.

  When using the standard push-in fitting on the spiral tube, fix the base of the tube with a hose band. Rotation may occur, causing a reduction in holding force.
  Use a fastening fitting in an atmosphere of high temperatures. The push-in fitting cannot be used.

⚠ CAUTION

■ Piping connections

● Compatible tube

When using a push-in fitting equipped solenoid valve, use CKD specified tubes.

Soft nylon (F-1500 Series)

Urethane (U-9500 Series)

When using a commercially available tube, check external dimension accuracy, thickness, and hardness. Use a urethane tube with a hardness of 93˚ and over (rubber hardness meter).

If a tube that does not satisfy the diameter accuracy or hardness is used, chucking force may decrease or the tube may come off or be difficult to insert.

Tube dimensions

O.D. mm	I.D. mm	
	Nylon	Urethane
ø4	ø2.5	ø2
ø6	ø4	ø4
ø8	ø5.7	ø5
ø10	ø7.2	ø6.5
ø12	ø8.9	ø8

Tolerance of outer diameter

Soft/hard nylon	±0.1 mm
Urethane ø4, ø6	+0.1 mm -0.15 mm
ø8, ø10, ø12,	+0.1 mm -0.2 mm

● Bending radius of tube

The tube's bending radius must be larger than the min. bending radius. (Otherwise, dislocation or leakage could result)

Bore size	Min. bending radius mm	
	Nylon	Urethane
ø4	10	10
ø6	20	20
ø8	30	30
ø10	40	40
ø12	55	50

● Cutting the tube

Use a tube knife (AZ1200), and cut at a right angle to the axis. Air could leak if a tube cut diagonally is inserted.

● Tube connection state

From the end of the fitting, provide a straight section that is as long as the O.D. of the tube being used, and avoid sudden bends in the piping at the fitting insertion port. Check that the tube's tensile strength in the lateral direction does not exceed 40 N.

● Compatible blanking plug

When using a push-in fitting equipped solenoid valve, use CKD specified blanking plugs.

Blanking plug GZP□-B Series

3. Power supply circuit/connection

⚠ CAUTION

■ Make sure that the leakage current of the programmable controller is 1 mA or less on the circuit.
High leakage current may cause the valve to malfunction.

■ Make sure that the instantaneous energizing operation of the double solenoid is 0.1 seconds or more at min.

■ When replacing or expanding blocks, perform tasks upon following the instruction manual. In particular, be careful of the order in which cable connectors are connected.

■ For other wiring connections, refer to the precautions for each wiring method.

■ When it is expected that valve blocks will be expanded, specify the need for spare cables in the manifold specifications sheet. (Up to 4 cables for 1 supply and exhaust block)

4. Manual operation

⚠ CAUTION

■ Manual operation of the MN4S0 uses an indirect driving system operated with pilot pressure.
This will not operate unless pilot pressure is supplied.

(1) Non-locking

· Press the button on the top surface of the valve with a thin tool, etc., that is ø2 mm or less until the button hits the bottom. Pressing A will create a state similar to when the coil for a is in operation, while pressing B will create a state similar to when the coil for b is in operation.

· While the main valve will also be restored with the single and 3-position when released, with the double, the main valve will retain its position even when the button is restored.

(2) Locking

· In addition to the function of the non-locking, it is possible to retain the pressed state by turning (with a precision (flathead) screwdriver of 2 mm) the button in the direction of the arrow by 90 degrees while pressing the button.
Be sure to release the lock prior to starting normal operation.

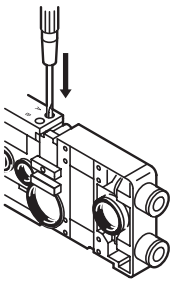

● Non-locking

No tools required type

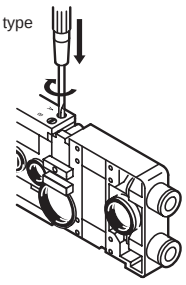

● Locking

In order to ensure safety, be sure to place a cover over custom order products of non-locking and locking that do not require tools.

Use/maintenance

1. Surge suppressor

⚠ CAUTION

■ The surge suppressor attached to the solenoid valve is intended to protect the output contacts for the solenoid valve drive. There is no significant protection for the other peripheral devices, and devices could be damaged or could malfunction due to a surge. As well, surges generated by other devices may be absorbed and cause damage such as burning. Note the following points.

(1) The surge suppressor functions to limit solenoid valve surge voltage, which can reach several hundred volts, to a low voltage level that the output contact can withstand. Depending on the output circuit used, this may be insufficient and could result in damage or malfunction. Check whether the surge suppressor can be used within the surge voltage limit of the solenoid valve in use, the output device's withstand pressure and circuit structure, and by the degree of return delay time.
When necessary, provide other surge countermeasures.
The inverse voltage surge generated when OFF can be suppressed to the following levels.

Specification voltage	Inverse voltage when OFF
12 VDC	Approx. 27 V
24 VDC	Approx. 47 V

(2) If the output unit is NPN, always connect a contact protection circuit in order to avoid the risk of surge voltage equivalent to the sum of the voltage shown in the table above and the power supply voltage being applied to the output transistor.

[Output transistor protection circuit: Installation example 1]

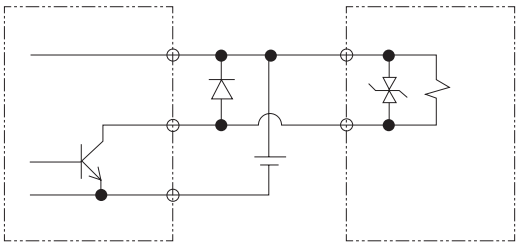

[Output transistor protection circuit: Installation example 2]

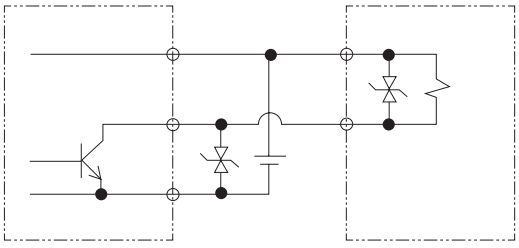

(3) If another device or solenoid valve is connected in parallel to the solenoid valve, the inverse voltage surge generated when the valve is OFF would apply to those devices. Even in the case of a solenoid valve with 24 VDC surge suppressor, a surge voltage may reach negative tens of volts for some models. This inverse voltage may cause damage or malfunction to other components connected in parallel. Avoid parallel connection of devices susceptible to inverse polarity voltages, e.g., LED indicators.
When driving several solenoid valves in parallel, the surge from other solenoid valves may enter the surge suppressor of one solenoid valve, and it may burn depending on the current value.
When driving several solenoid valves with surge suppressors in parallel, surge current could concentrate at the surge suppressor with the lowest limit voltage and cause similar burning. Due to the variations in surge suppressor limit voltage that exist even among solenoid valves of the same model No., in the worst case the surge suppressor may burn out. Avoid driving several solenoid valves in parallel.

(4) The surge suppressor incorporated in the solenoid valve will often be short-circuited if it is damaged by overvoltage or overcurrent from other solenoid valves. Where there is a failed surge suppressor, if a large current flows when the output is ON, in the worst case scenario, the output circuit or solenoid valve could be damaged or ignited. Do not continue energizing in a state of failure.
Additionally, to prevent large currents from continuing to flow, connect an overcurrent protection circuit to the power supply and drive circuit, or use a power supply with overcurrent protection.

2. Disassembly/assembly

⚠ CAUTION

■ Be sure to turn power OFF and release the pressure before performing the following work.

- For the procedures for adding, disassembling, and assembling regulators and regulator blocks, due to specifications change or service life, refer to technical data (page 1222). Contact CKD for details.
- Confirm that the connection key between blocks and the fitting stopper pin for the regulator block are securely assembled before use.
  In addition, for details on handling the valve block, refer to the instruction manual for MN4S0.

4SA0/4SB0

Pilot operated 5-port valve

Small pneumatic valve

Overview

4SA0/4SB0 Series miniature 5-port valves will contribute to equipment space reduction and weight reduction. Suitable for operating cylinders of up to ø25

Features

Space saving
Compact design with a valve width of 10 mm.

Weight of equipment reduced
Aluminum and resin used in core areas.

Energy saving
Low wattage design (25 mA with 24 VDC).

Selectable electrical connections
Series available for lead wire, C-connectors, and D-connectors. Combinations with a surge suppressor and lamp are also available.

Directly connected to an electronic control
Voltages of 5 VDC, 6 VDC, 12 VDC, and 24 VDC are available, with a low wattage design (25 mA with 24 VDC).

Resource saving
Use of special soft packing. Can be used with no lubrication

Compatible with lines where copper-based materials are prohibited
The generation of copper ions is prevented with selection of appropriate materials and implementation of special surface treatment.

Supports reduced wiring for PLC control
Connection of flat cable connection and D sub-connectors (upward, lateral) are available. Compatible with reduced wiring for PLC control.

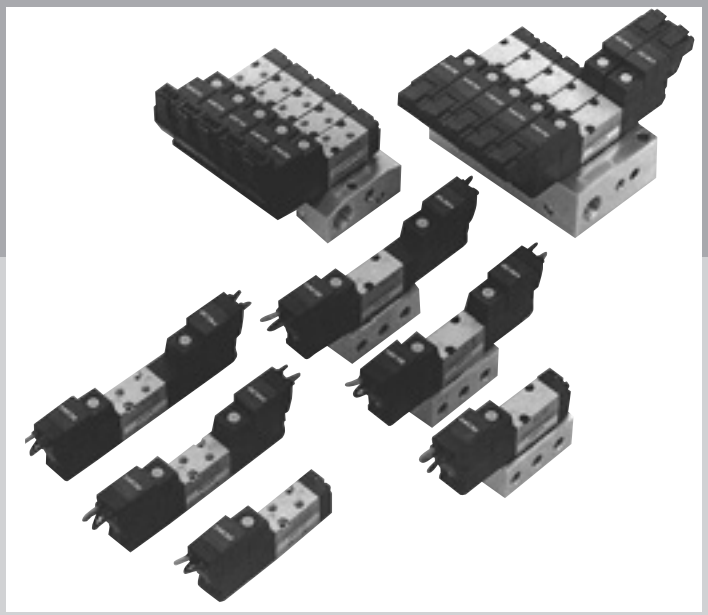

CONTENTS

Series variation 1232
Electrical connections list (wire connections/circuit) 1234
Discrete valve
● Body piping (4SA0) 1236
● Sub-plate piping (4SB0) 1236
Individual wiring manifold
● Body piping (M4SA0) 1244
● Sub-plate piping (M4SB0) 1244
Reduced wiring manifold
● Sub-plate piping (M4SB0) 1248
Technical data
(1) Notes on wiring 1252
(2) Pneumatic system selection guide 1256

4SA0/4SB0 Series

Series name/piping method			No. of ports	Position Number of solenoids JIS symbol	Valve performance: Effective cross-sectional area S [mm²]	Valve performance: Flow characteristics C [dm³/(s·bar)] *1	Valve performance: Applicable cylinder bore size	Voltage (V)	
Single unit	Direct	4SAO 	5-port	● 2-position single 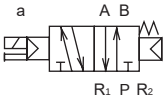	0.9	-	ø6 to ø25	24 DC 12 DC Option 6 DC 5 DC	
	Sub-plate	4SBO 		● 2-position double 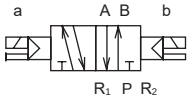	-	0.29 to 0.33			
Individual wiring manifold	Direct	M4SAO 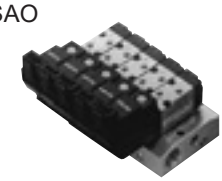		● 3-position all ports closed 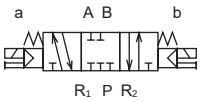	0.9	-		24 DC 12 DC Option 6 DC 5 DC	
	Sub-plate	M4SBO 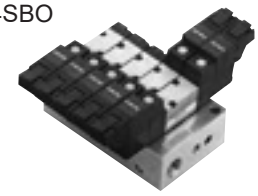		● 3-position ABR connection 	-	0.29 to 0.32			
Reduced wiring manifold	Sub-plate	M4SBO 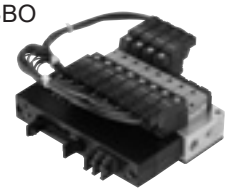		● 3-position PAB connection 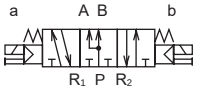	-	0.29 to 0.32		24 DC 12 DC Option 6 DC 5 DC	

*1: Effective cross-sectional area S and sonic conductance C are converted as S ≈ 5.0 x C.

	Switching position						Port size of A/B port					Electrical connections					Page
							Barbed fitting		Female thread								
	2-position single	2-position double	3-position all ports closed	3-position A/B/R connection	3-position P/A/B connection	Mix manifold	ø4 barbed fitting	ø6 barbed fitting	M3	M5	ø4 push-in fitting	Grommet lead wire	C-connector	D-connector	D sub-connector	Flat cable connector	
	●	●	●	●	●		●		●			●	●	●			1236
	●	●	●	●	●					●		●	●	●			1236
	●	●	●	●	●	●	●		●			●	●	●			1244
	●	●	●	●	●	●	●	●		●	●	●	●	●			1244
	●	●	●	●	●	●	●	●		●	●				●	●	1248

Note: Refer to the following page for details on electrical connections/other options.

Electrical connections

Discrete valve/individual wiring manifold

Blank Grommet lead wire

Lead wire 300 mm
(0.13 mm²AWG26)

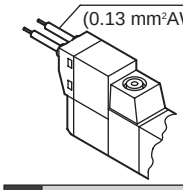

D D-connector lead wire

● Lead wire length
D : 300 mm
D00 : 500 mm
D01 :1000 mm
D02 :2000 mm

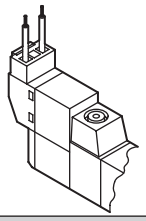

C C-connector lead wire

● Lead wire length
C : 300 mm
C00 : 500 mm
C01 :1000 mm
C02 :2000 mm

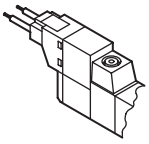

D1 D-connector with socket

Socket/crimping terminal attached

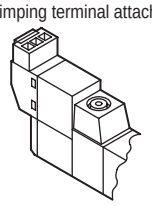

C1 C-connector with socket

Socket/crimping terminal attached

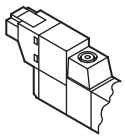

D2 D-connector/with lead wire with surge suppressor/lamp

● Lead wire length
D2 : 300 mm
D20 : 500 mm
D21 :1000 mm
D22 :2000 mm
Black (-)
Red (+)

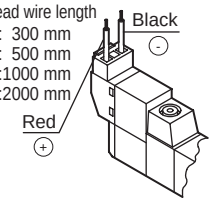

C2 C-connector with lead wire with surge suppressor/lamp

● Lead wire length
C2 : 300 mm
C20 : 500 mm
C21 :1000 mm
C22 :2000 mm
Red (+)
Black (-)

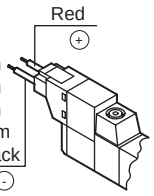

D2N D-connector with surge suppressor/lamp

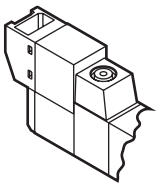

C2N C-connector with surge suppressor/lamp

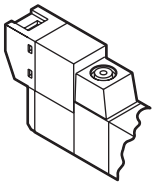

D3 D-connector with socket with surge suppressor/lamp

Socket
· Crimping terminal attached (+) (-)

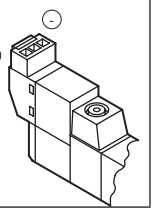

C3 C-connector, with socket, with surge suppressor/lamp

Socket
· Crimping terminal attached (+) (-)

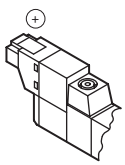

Reduced wiring manifold

C4 T31 D sub-connector lateral with surge suppressor and indicator lamp

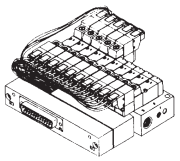

D4 T30 D sub-connector upward with surge suppressor/lamp

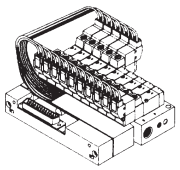

C4 T50 Flat cable connector with surge suppressor/lamp

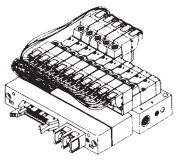

Manual override

Blank Non-locking

Push

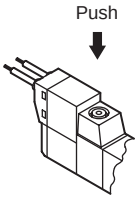

M1 Locking

Push
Turn (120°)

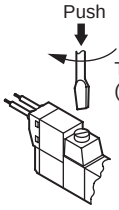

Other options

P Mounting plate

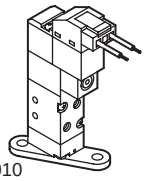

Only the 4SA010 can be attached

Internal circuit diagram with surge suppressor/lamp

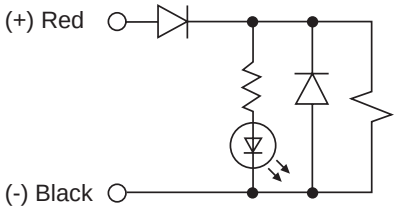

* Note that models with surge suppressor and lamp have polarity.
* Diode is used as a surge suppressor.

MEMO

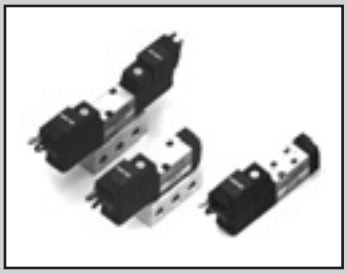

Single unit
Pilot operated 5-port valve/small pneumatic valve
Body piping/sub-plate piping

4SA0/4SB0 Series

● Cylinder bore size: ø6 to ø25

CE Refer to the Ending for details.

RoHS CAD

JIS symbol

● 5-port valve

2 position single

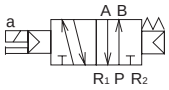

2-position double



3-position
All ports closed

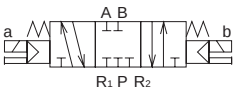

3-position A/B/R connection

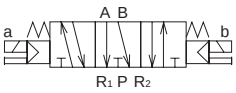

3-position P/A/B connection

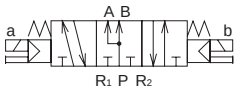

Common specifications

Item	Description
Valve and operation	Pilot operated soft spool valve
Working fluid	Compressed air
Max. working pressure MPa	0.7
Min. working pressure MPa	0.2
Proof pressure MPa	1.05
Ambient temperature °C	5 to 50
Fluid temperature °C	5 to 50
Lubrication	Not required
Degree of protection	Dust-proof
Vibration resistance m/s^2	50 or less
Shock resistance m/s^2	300 or less
Atmosphere	Cannot be used in corrosive gas environment.

*1:4SA0 is a pilot atmosphere release type. The pilot exhaust for 4SB0 is centralized with port R.

Electrical specifications

Item	Description	
Rated voltage V	24 DC	12 DC
Voltage fluctuation range	±10%	
Holding current A	0.025	0.050
(*2)	(0.029)	(0.058)
Power consumption W (*3)	0.6 (0.7)	0.6 (0.7)
Thermal class	B	
Temperature rise °C	50	

*2: ( )The values in are with a surge suppressor and indicator lamp.

*3:The power consumption for the 6/5 VDC will be 0.9 (1.0) W. The power consumption for ozone-proof specifications (P11) will be 0.9 (1.0) W.

Individual specifications

Item		4SA0		4SB0
Port size	Port P/A/B	M3	ø4 barbed fitting	M5
	R_1/R_2Port	M3		M5

Performance/characteristics by model

Item		4SA0	4SB0
Response time	2-position	20 or less	
(*4) ms	3-position	30 or less	

*4: The response times are values with supply pressure of 0.5 MPa, without lubrication, and with the power ON. They depend on the pressure and the lubricant quality.

Weight

Item			4SA0	4SB0
Weight g	2-position	Single	23	43
		Double	35	55
	3-position		39	59

Flow characteristics

Model No.	Solenoid position		Port size	P → A/B		A/B→R		S(mm^2)
				C(dm^3/(s·bar))	b	C(dm^3/(s·bar))	b	
4SA0	2-position		Port P/A/B: M3/ø4 barbed fitting R_1/R_2Port: M3	-	-	-	-	0.9
	3-position	All ports closed		-	-	-	-	
		A/B/R connection		-	-	-	-	
		P/A/B connection		-	-	-	-	
4SB0	2-position		M5	0.32	0.20	0.30	0.21	-
	3-position	All ports closed		0.32	0.19	0.29	0.11	-
		A/B/R connection		0.31	0.18	0.29	0.22	-
		P/A/B connection		0.33	0.20	0.29	0.21	-

*5: Effective cross-sectional area S and sonic conductance C are converted as S ≈ 5.0 X C.

Ozone-proof specifications (Ending Page 5)

** - Voltage - P11

CE marking specifications

** - Voltage - ST

• Standard voltage of 24 VDC or less is CE marking-compatible even if the model No. is not indicated with "ST".

How to order discrete valve

4SA0 1 0 – M3 – M1 C2 – 3

● Single solenoid valve for manifold (body piping)

4SA0 1 9 – M3 – M1 C2 —— 3

● Single solenoid valve for manifold (sub-plate piping)

4SB0 1 9 – 00 – M1 C2 —— 3

Ⓐ Model No. | Fixed code | Ⓑ Solenoid position | Ⓒ Port size | Ⓓ Manual override | Ⓔ Electrical connections (*3) | Ⓕ Other options | Ⓖ Voltage

Note: Refer to page 1234 for the circuit diagram with a surge suppressor/lamp.

Code	Description	Ⓐ Model No. Body piping 4SA0	Ⓐ Model No. Sub-plate piping 4SB0
Ⓑ Solenoid position			
1	2-position single	●	●
2	2-position double	●	●
3	3-position all ports closed	●	●
4	3-position A/B/R connection	●	●
5	3-position P/A/B connection	●	●
Ⓒ Port size			
Port	P/A/B	R_1/R_2	
M3	M3	● (*1)	
M5	M5		●
T4	ø4 Barbed fitting	M3	● (*2)
Ⓓ Manual override			
Blank	Non-locking manual override	●	●
M1	Locking manual override	●	●
Ⓔ Electrical connections			
Grommet lead wire			
Blank	Grommet lead wire (300 mm)	●	●
C-connector (lead wire lateral direction)			
C	Lead wire (300 mm)	●	●
C00	Lead wire (500 mm)	●	●
C01	Lead wire (1000 mm)	●	●
C02	Lead wire (2000 mm)	●	●
C1	Without lead wire (with socket)	●	●
C2	Lead wire (300 mm), surge suppressor/indicator lamp	●	●
C20	Lead wire (500 mm), surge suppressor/indicator lamp	●	●
C21	Lead wire (1000 mm), surge suppressor/indicator lamp	●	●
C22	Lead wire (2000 mm), surge suppressor/indicator lamp	●	●
C2N	No lead wire (without socket), surge suppressor/indicator lamp	●	●
C3	No lead wire (with socket), surge suppressor/indicator lamp	●	●
C4	With surge suppressor/lamp (for T31/T50) (*4)	●	●
D-connector (lead wire upward direction)			
D	Lead wire (300 mm)	●	●
D00	Lead wire (500 mm)	●	●
D01	Lead wire (1000 mm)	●	●
D02	Lead wire (2000 mm)	●	●
D1	Without lead wire (with socket)	●	●
D2	Lead wire (300 mm), surge suppressor/indicator lamp	●	●
D20	Lead wire (500 mm), surge suppressor/indicator lamp	●	●
D21	Lead wire (1000 mm), surge suppressor/indicator lamp	●	●
D22	Lead wire (2000 mm),surge suppressor/indicator lamp	●	●
D2N	No lead wire (without socket), surge suppressor/indicator lamp	●	●
D3	No lead wire (with socket), surge suppressor/indicator lamp	●	●
D4	With surge suppressor/lamp (T30) (*4)	●	●
Ⓕ Other options			
Blank	Without mounting plate	●	●
P	Mounting plate (compatible only with 2-position single)	●	
Ⓖ Voltage			
3	Standard: 24 VDC	●	●
4	Standard: 12 VDC	●	●
DC6V	Option: 6 VDC	●	●
DC5V	Option: 5 VDC	●	●

⚠ Precautions for model No. selection

*1: The CKD compatible fittings of M3 are as listed below.
FTS4-M3, GWS3-M3-S
*2: For T4, barbed fitting FTS4-M3 screws into the A/B-port.
*3: The lead wire used is AWG26 size. (7/0.16, outer diameter ø1.35, 0.13 mm^2)
*4: C4 and D4 are only single solenoid valves for 4SBO manifolds. A reduced wiring socket assembly (length of 270 mm) will be attached.

[Example of model No.]

4SA010-M3-M1P-3

Ⓐ Model: 4SA0
Ⓑ Solenoid position : 2-position single
Ⓒ Port size : M3
Ⓓ Manual override : Locking manual override
Ⓔ Electrical connections: Grommet lead wire (standard)
Ⓕ Other options : Mounting plate
Ⓖ Voltage : 24 VDC

Internal structure and parts list

4SA010

● 2-position single

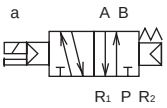

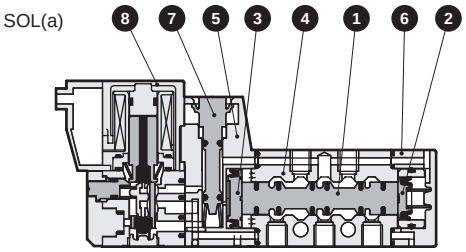

4SA020

● 2-position double

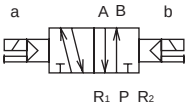

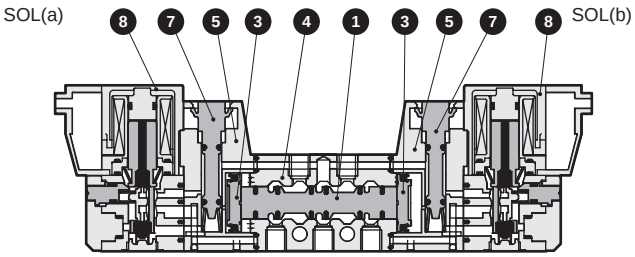

4SA030

● 3-position
All ports closed

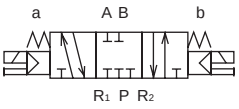

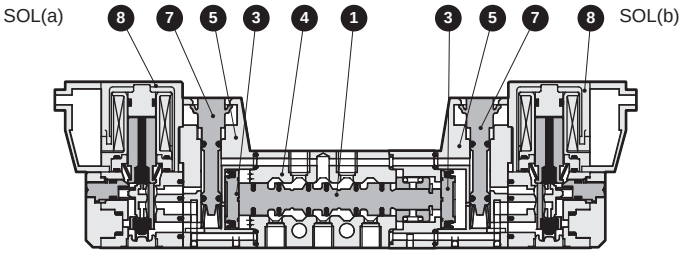

4SA040

A/B/R connection

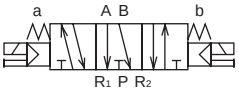

4SA050

P/A/B connection



Main parts list

No.	Part name	Material
1	Spool assembly	-
2	Piston S assembly	-
3	Piston D assembly	-
4	Body	Aluminum
5	Piston chamber	Resin
6	Cap	Resin
7	Manual override	Resin
8	Coil assembly	-

Parts list

No.	Part name	Model No.
8	Coil assembly	4S0 - [electrical connections] - COIL - [voltage] ↑ Blank for grommet lead wire

Internal structure and parts list

4SB010

● 2-position single

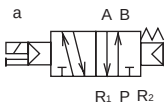

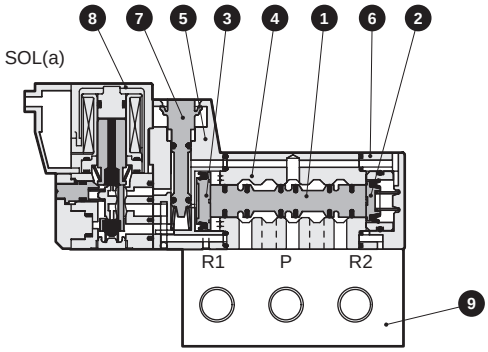

4SB020

● 2-position double

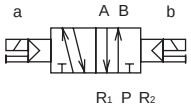

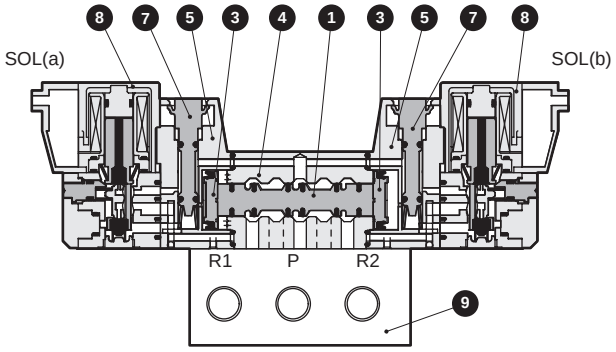

4SB030

● 3-position
All ports closed

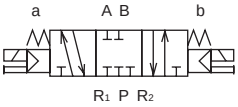

4SB040

A/B/R connection



4SB050

P/A/B connection



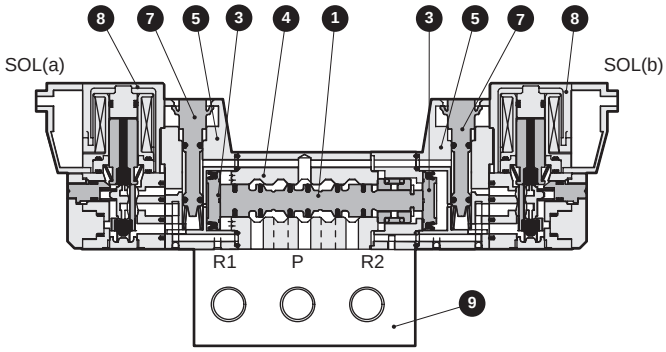

Main parts list

No.	Part name	Material
1	Spool assembly	-
2	Piston S assembly	-
3	Piston D assembly	-
4	Body	Aluminum
5	Piston chamber	Resin
6	Cap	Resin
7	Manual override	Resin
8	Coil assembly	-
9	Sub-plate	Aluminum

Parts list

No.	Part name	Model No.
8	Coil assembly	4S0 - electrical connections - COIL - voltage ↑ Blank for grommet lead wire

Dimensions

4SA010-M3 CAD

● 2-position single: grommet lead wire

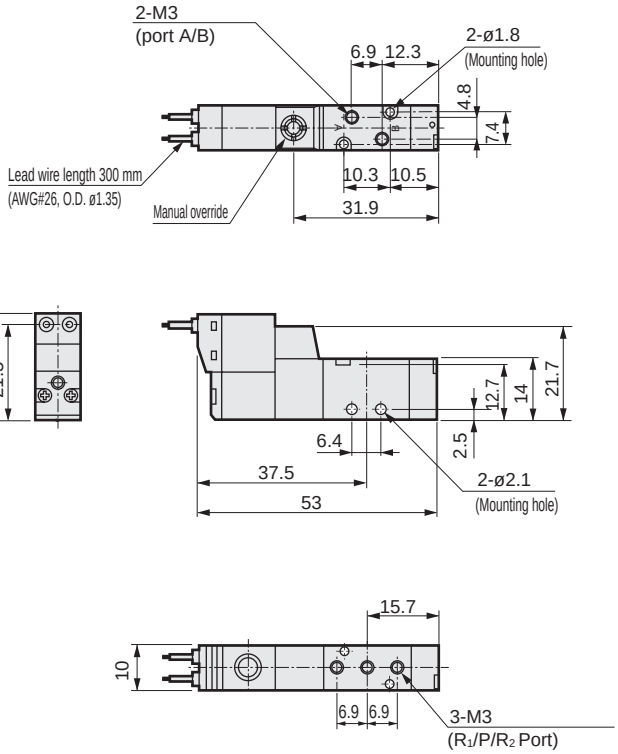

● Mounting plate: P (2-position single only)

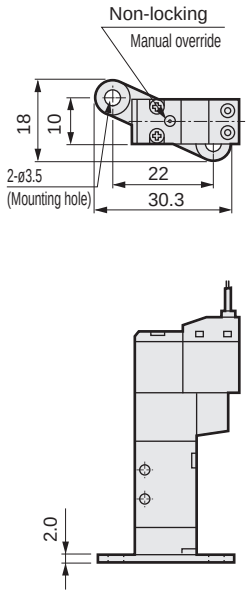

4SA020-M3 CAD

● 2-position double: grommet lead wire

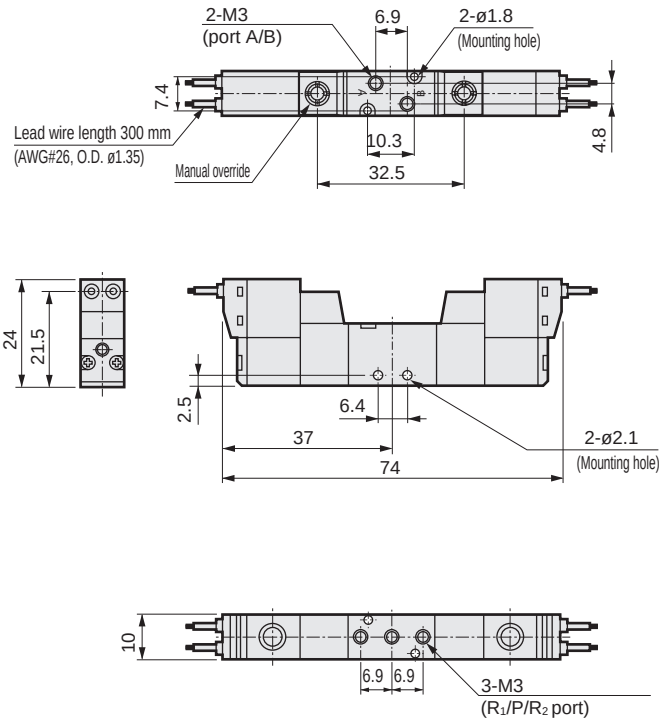

4SA0$^{3}_{5}$0-M3 CAD

● 3-position: grommet lead wire

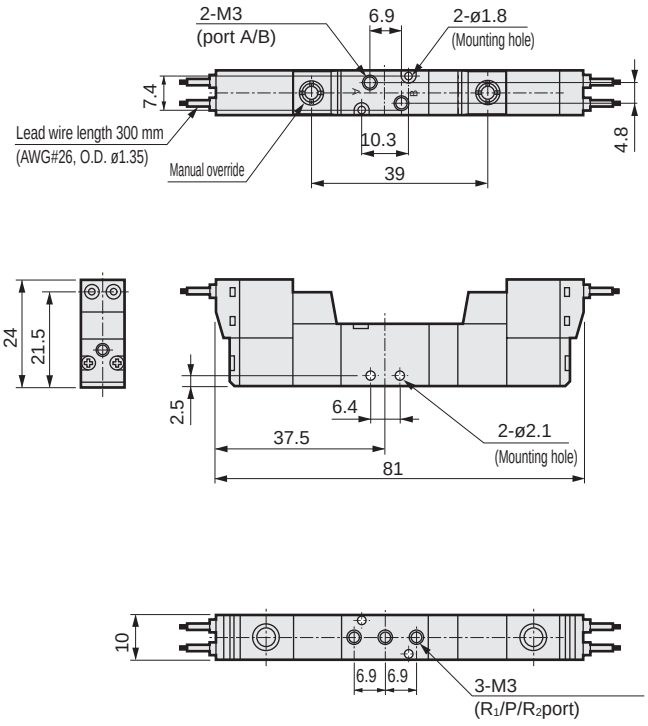

Dimensions

● ø4 barbed fitting: (T4)

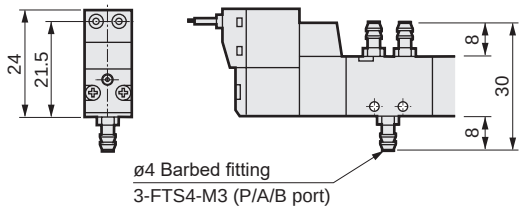

● Locking manual override: (M1)

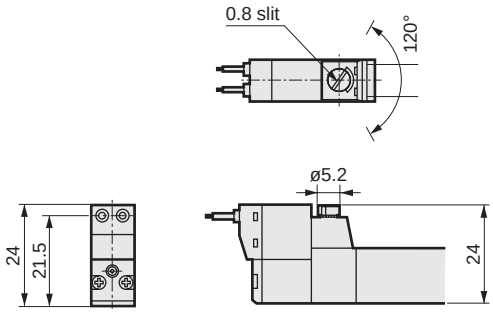

● C-connector: (C/C0*/C1/C2/C2*/C3)

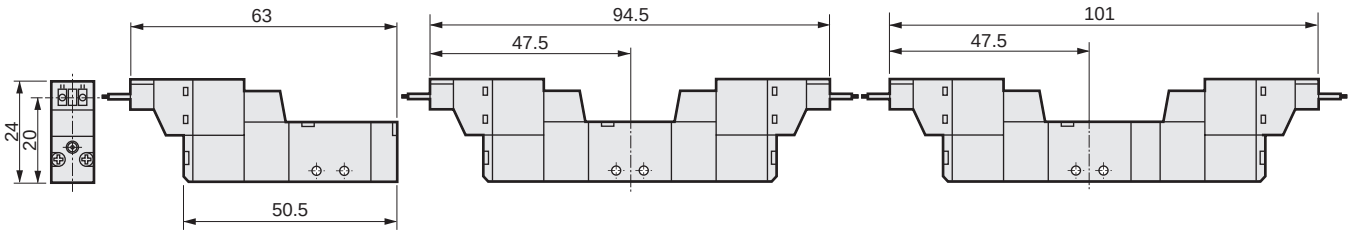

2-position single　2-position double　3-position

● D-connector: (D/D0*/D1/D2/D2*/D3)

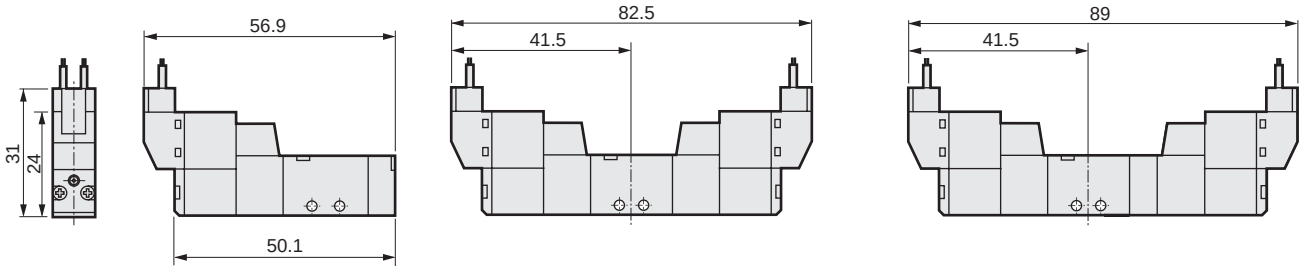

2-position single　2-position double　3-position

Dimensions CAD

4SB010-M5

● 2-position single: grommet lead wire

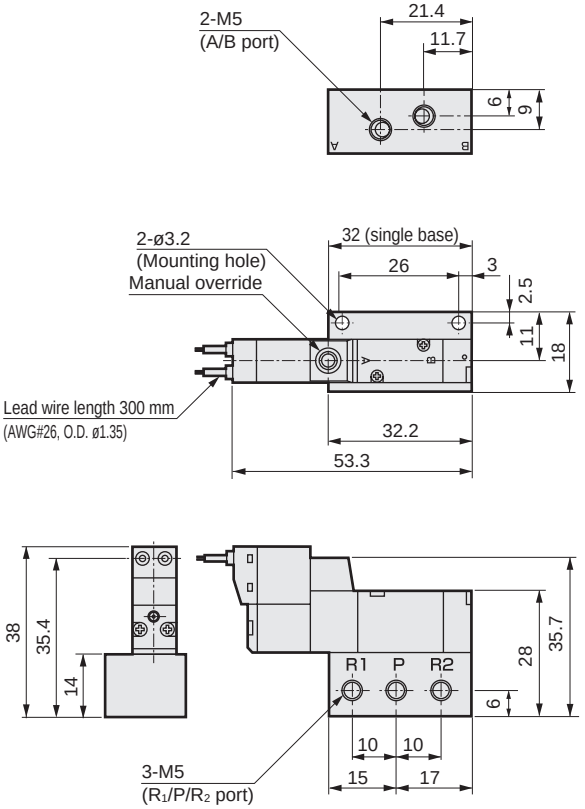

4SB020-M5

● 2-position double: grommet lead wire

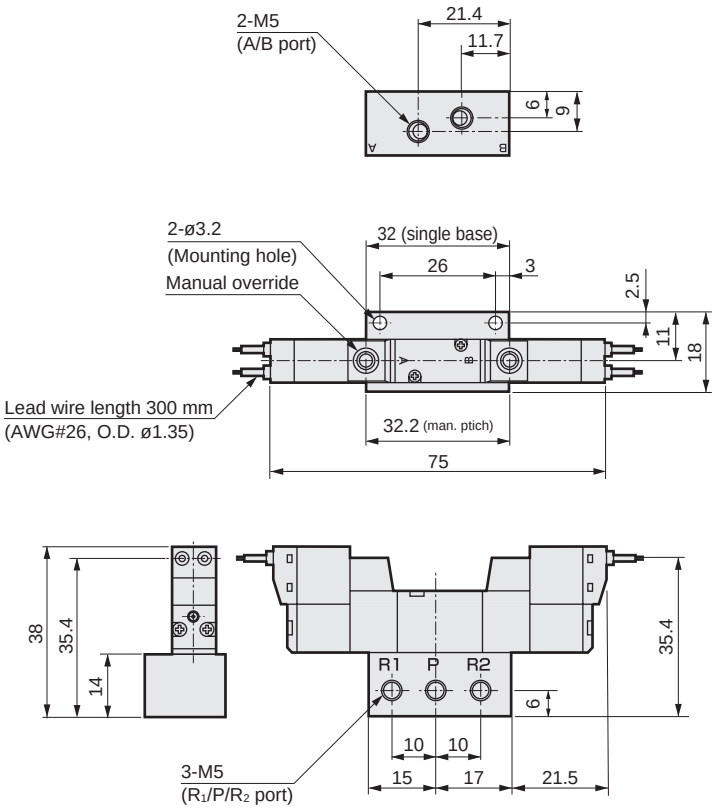

4SB0 3/5 0-M5

● 3-position: grommet lead wire

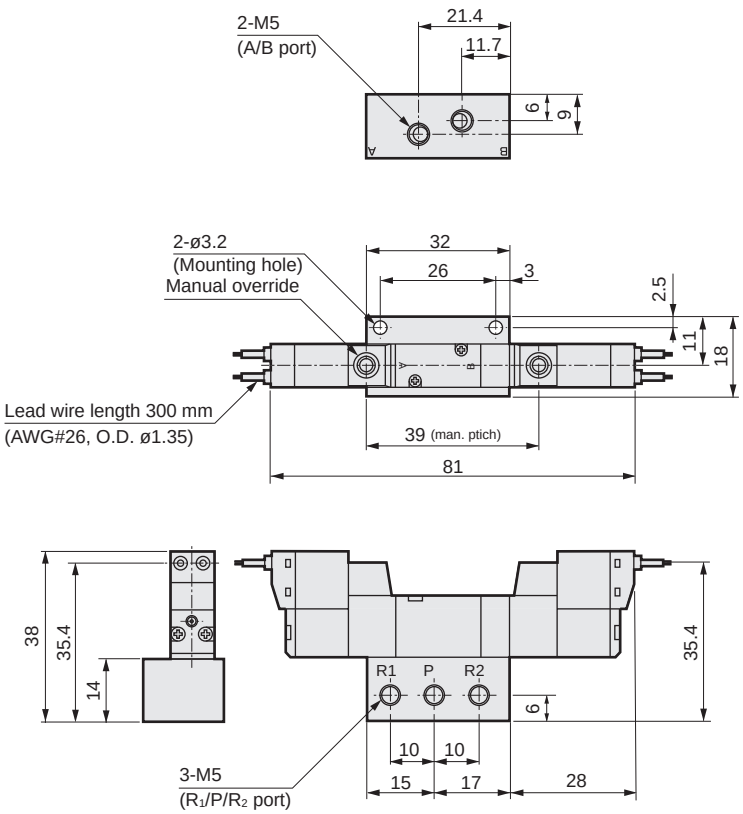

Dimensions

● Locking manual override: (M1)

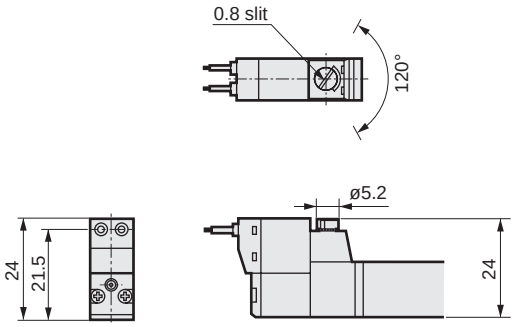

● C-connector: (C/C0*/C1/C2/C2*/C3)

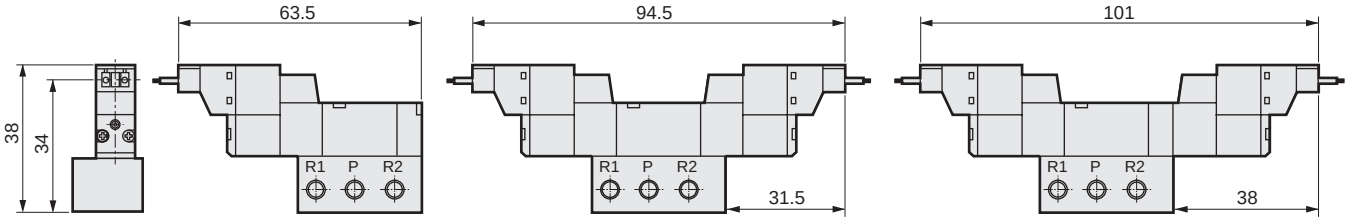

2-position single | 2-position double | 3-position

● D-connector: (D/D0*/D1/D2/D2*/D3)

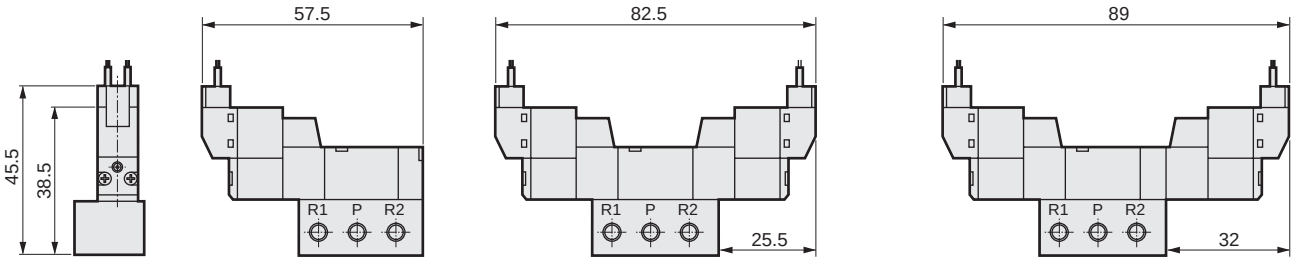

2-position single | 2-position double | 3-position

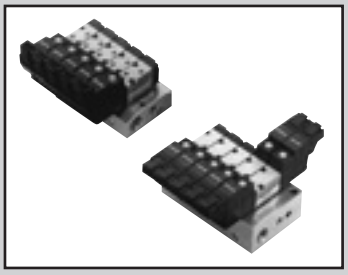

Individual wiring manifold,
Pilot operated 5-port valve/small pneumatic valve
Body piping/sub-plate piping

M4SA0/M4SB0 Series

● Cylinder bore size: ø6 to ø25

CE Refer to the Ending for details.

RoHS CAD

JIS symbol

● 5-port valve

2-position single

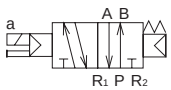

2-position double



3-position all ports closed

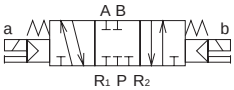

3-position A/B/R connection

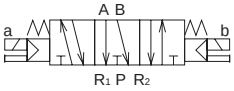

3-position P/A/B connection

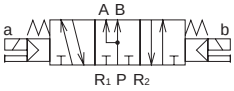

Common specifications

Item	Description
Manifold method	Manifold integrated
Manifold	Common supply, common exhaust (*1)
Station No.	2 to 20 stations
Valve and operation	Pilot operated soft spool valve
Working fluid	Compressed air
Max. working pressure MPa	0.7 (≈100 psi, 7 bar)
Min. working pressure MPa	0.2 (≈29 psi, 2 bar)
Proof pressure MPa	1.05 (≈150 psi, 10.5 bar)
Ambient temperature °C	5 (41°F) to 50 (122°F)
Fluid temperature °C	5 (41°F) to 50 (122°F)
Lubrication	Not required
Degree of protection	Dust-proof
Vibration resistance m/s^2	50 or less
Shock resistance m/s^2	300 or less
Atmosphere	Cannot be used in corrosive gas environment.

Electrical specifications

Item	Description	
Rated voltage V	24 DC	12 DC
Voltage fluctuation range	±10%	
Holding current A	0.025	0.050
(*2)	(0.029)	(0.058)
Power consumption W (*3)	0.6(0.7)	0.6(0.7)
Thermal class	B	
Temperature rise°C	50	

*1: 4SA0 is a pilot atmosphere release.
The pilot exhaust for 4SB0 is centralized with the R-port.
*2: The values in ( ) are with a surge suppressor and indicator lamp.
*3: The power consumption for 6/5 VDC will be 0.9 (1.0) W.
The power consumption for ozone-proof specifications (P11) will be 0.9 (1.0) W.

Individual specifications

Item		M4SA0	M4SB0
Port size (*4)	P-port	M5	M5/Rc1/8
	A/B-port	M3	M5
	R-port	Rc1/8	
Manifold base weight calculation formula (n: station No.) g	P-port: M5	13n+18	20n+36
	P-port: Rc1/8		21n+26

*4: For the port size of P and A/B-ports, there are options other than those listed above.
Refer to item Ⓒ in How to order on the next page.

Performance/characteristics by model

Item		M4SA0	M4SB0
Response time (*5) ms	2-position	20 or less	
	3-position	30 or less	

*5: The response time is the value at 0.5 MPa supply pressure, with no lubrication, and with the power ON. It depends on the pressure and the lubricant quality.

Flow characteristics

Model No.	Solenoid position	Port size	P→A/B		A/B→R	
			C[dm^3/(s·bar)]	b	C[dm^3/(s·bar)]	b
M4SA0	2-position	P-port: M5, A/B-port: M3	-	-	-	-
	3-position	R-port: Rc1/8	-	-	-	-
M4SB0	2-position	P-port: M5/Rc1/8	0.30	0.15	0.30	0.21
	3-position	A/B-port: M5, R-port: Rc1/8	0.29	0.14	0.30	0.20

*6: Be careful when using the T4 specifications (ø4 barbed fitting use) as the flow rate will be constricted depending on the effective cross-sectional area of the fitting.
*7: Effective cross-sectional area S and sonic conductance C are converted as S ≈ 5.0 x C.

[Mix manifold]

● How to list combination descriptions
When selecting a combination manifold (write 8 from Ⓑ), list the code (refer to table at right) for required functions and the arrangement No. (numbering up to specified station No. with left side as 1) in the field for remarks below the normal model No. display as shown in the example.

Code	Function
S1	2-position single
S2	2-position double
S3	3-position all ports closed
S4	3-position A/B/R connection
S5	3-position P/A/B connection
MP	Masking plate

1	2	3	4	5	6	7
2-position Single (S1)	2-position Double (S2)	3-position All ports closed (S3)	3-position All ports closed (S3)	2-position Double (S2)	2-position Single (S1)	3-position A/B/R connection (S4)

Example

The model No. when using a combination manifold of 7 stations with an array such as that in the figure at left with the A/B/P-ports of M5 and 24 VDC is
M4SB080-M5-C02-7-3-222100
S1=1,6 S2=2,5 S3=3,4 S4=7
Code Position

S1	S2	S3	S4	S5	MP
2	2	2	1	0	0

● With a mix manifold, when using 10 or more actuators of the same model No., specify using the codes in the table below.

Actuator quantity	10	11	12	13	14	15	16	17	18	19
Code	A	B	C	D	E	F	G	H	I	J

How to order individual wiring manifold

● Single solenoid valve for manifold (body piping)

4SA0 1 9 – M3 – M1 C2 ——— 3

● Single solenoid valve for manifold (sub-plate piping)

4SB0 1 9 – 00 – M1 C2 ——— 3

● Individual wiring manifolds

M 4SB0 8 0 – M5 – M1 C2 – 5 – 3 – 2 2 0 0 0 1

Fixed code

Ⓐ Model No. / Ⓑ Solenoid position / Ⓒ Port size / Ⓓ Manual override / Ⓔ Electrical connections / Ⓕ Station No. / Ⓖ Voltage

● Refer to page 1255 for how to order manifold bases and masking plates.

Indicate the valve function based quantity display position when using a mix manifold. Refer to page 1244.

Code	Description	Ⓐ Model No. Body piping	Ⓐ Model No. Sub-plate piping
		4SA0	**4SB0**
Ⓑ Solenoid position			
1	2 position single	●	●
2	2-position double	●	●
3	3-position all ports closed	●	●
4	3-position A/B/R connection	●	●
5	3-position P/A/B connection	●	●
8	Mix manifold (when there are multiple solenoid positions)	●	●

Ⓒ Port size

Port	A/B	P	R		
M3	M 3	M 5	Rc 1/8	●(*1)	
M5	M 5				●
GS4	ø4 push-in fitting				●(*3)
T4	ø4 barbed fitting			●(*2)	●(*4)
T6	ø6 barbed fitting				●(*4)
PM5	M 5	Rc 1/8	Rc 1/8		●
PGS4	ø4 push-in fitting				●(*3)
PT4	ø4 barbed fitting				●(*4)
PT6	ø6 barbed fitting				●(*4)

Ⓓ Manual override			
Blank	Manual override of non-locking	●	●
M1	Locking manual override	●	●

Ⓔ Electrical connections			
Grommet lead wire			
Blank	Grommet lead wire (300 mm)	●	●
C-connector (lead wire lateral direction)			
C	Lead wire (300 mm)	●	●
C00	Lead wire (500 mm)	●	●
C01	Lead wire (1000 mm)	●	●
C02	Lead wire (2000 mm)	●	●
C1	Without lead wire (with socket)	●	●
C2	Lead wire (300 mm) with surge suppressor and indicator lamp	●	●
C20	Lead wire (500 mm) with surge suppressor and indicator lamp	●	●
C21	Lead wire (1000 mm) with surge suppressor and indicator lamp	●	●
C22	Lead wire (2000 mm) with surge suppressor and indicator lamp	●	●
C2N	Lead wireand(Without socket) with surge suppressor and indicator lamp	●	●
C3	Lead wireand(With socket) with surge suppressor and indicator lamp	●	●
D-connector (lead wire upward direction)			
D	Lead wire (300 mm)	●	●
D00	Lead wire (500 mm)	●	●
D01	Lead wire (1000 mm)	●	●
D02	Lead wire (2000 mm)	●	●
D1	Without lead wire (with socket)	●	●
D2	Lead wire (300 mm) with surge suppressor and indicator lamp	●	●
D20	Lead wire (500 mm) with surge suppressor and indicator lamp	●	●
D21	Lead wire (1000 mm) with surge suppressor and indicator lamp	●	●
D22	Lead wire (2000 mm) with surge suppressor and indicator lamp	●	●
D2N	Lead wireand(Without socket) with surge suppressor and indicator lamp	●	●
D3	Lead wireand(With socket) with surge suppressor and indicator lamp	●	●

Ⓕ Station No.			
2 to 20	2 to 20 stations	●	●

Ⓖ Voltage					
3	Standard	24 VDC		●	●
4		12 VDC		●	●
DC6V	Option	6 VDC		●	●
DC5V		5 VDC		●	●

⚠ Precautions for model No. selection

For **M4SA0**

*1: The CKD compatible fittings of M3 are as listed below.
FTS4-M3, GWS3-M3-S

*2: For T4, barbed fitting FTS4-M3 screws into the A/B-port.

For **M4SB0**

*3: For GS4, push-in fitting GWS4-M5-S screws into the A/B-port.

*4: For T4 and T6, FTS4-M5 and FTS6-M5 screw into the A/B-port.

[Example of model No.]

● Individual wiring manifolds

M4SB010-M5-C2-2-3

Ⓐ Model No. : M4SB0
Ⓑ Solenoid position : 2-position single
Ⓒ Port size : A/B/P-port = M5, R-port = Rc1/8
Ⓓ Manual override : Non-locking manual override
Ⓔ Electrical connections : With C-connector lead wire (300 mm)/ with surge suppressor and indicator lamp
Ⓕ Station No. : 2 stations
Ⓖ Voltage : 24 VDC

Ozone-proof specifications (Ending Page 5)

** - Voltage - **P11**

CE marking specifications

** - Voltage - **ST**

・Standard voltage of 24 VDC or less is CE marking-compatible even if the model No. is not indicated with "ST".

Dimensions CAD

M4SA0*0-M3

● Body piping A type: grommet lead wire

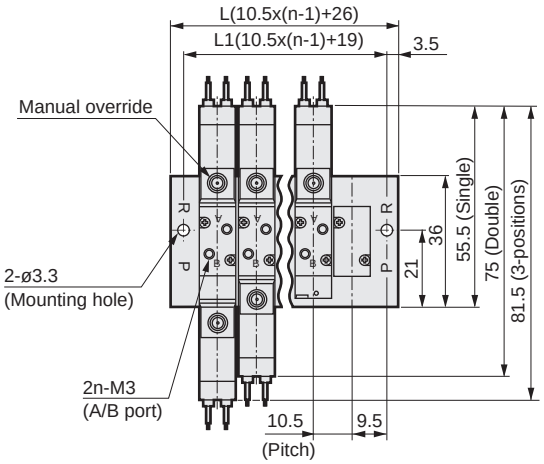

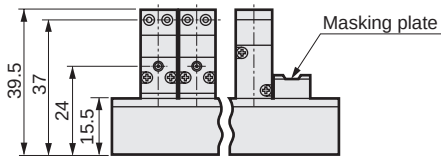

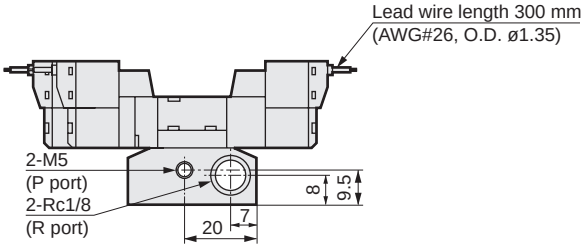

Station No.	2	3	4	5	6	7	8	9	10	11	12	13	14	15	16	17	18	19	20
L1	29.5	40	50.5	61	71.5	82	92.5	103	113.5	124	134.5	145	155.5	166	176.5	187	197.5	208	218.5
L	36.5	47	57.5	68	78.5	89	99.5	110	120.5	131	141.5	152	162.5	173	183.5	194	204.5	215	225.5

M4SB0*0-M5

● Sub-plate piping B type (P port M5): grommet lead wire

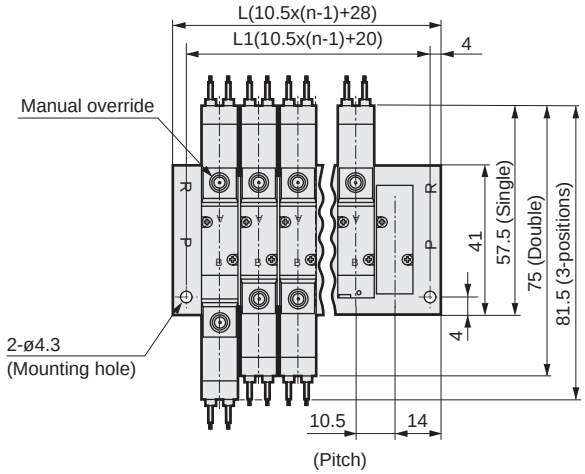

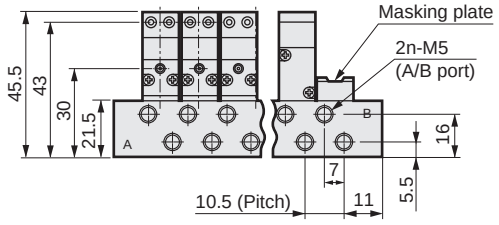

● P port Rc1/8

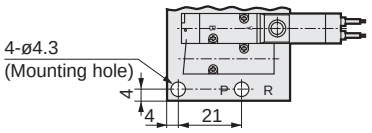

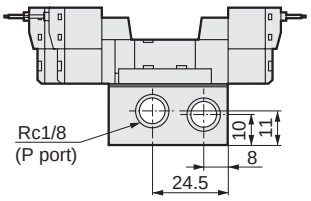

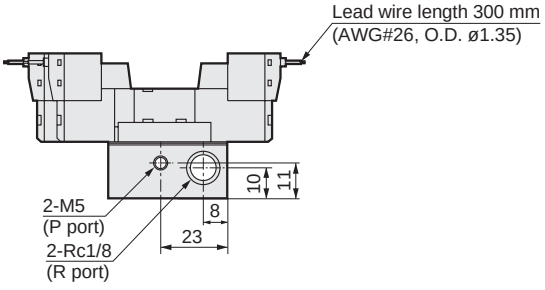

Station No.	2	3	4	5	6	7	8	9	10	11	12	13	14	15	16	17	18	19	20
L1	30.5	41	51.5	62	72.5	83	93.5	104	114.5	125	135.5	146	156.5	167	177.5	188	198.5	209	219.5
L	38.5	49	59.5	70	80.5	91	101.5	112	122.5	133	143.5	154	164.5	175	185.5	196	206.5	217	227.5

Dimensions

Body piping A type

● ø4 barbed fitting: (T4)

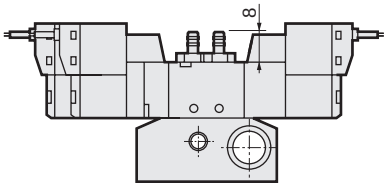

● C-connector:
(C/C0*/C1/C2/C2*/C3)

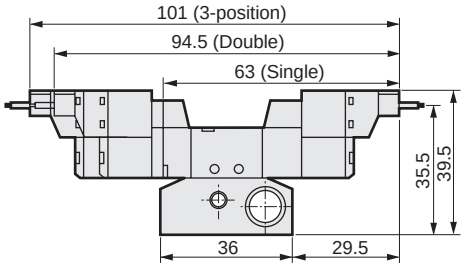

● Locking manual override: (M1)

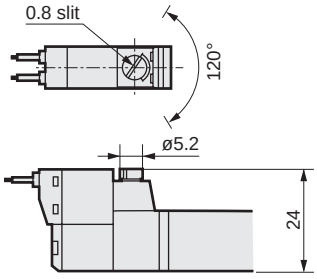

● D-connector:
(D/D0*/D1/D2/D2*/D3)

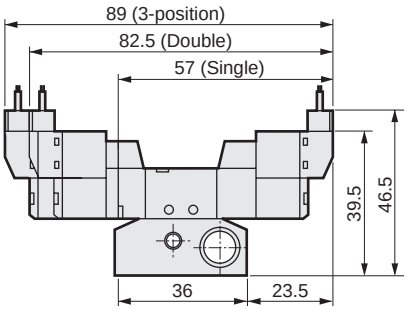

Sub-plate piping B type

● ø4 push-in fitting: (GS4/PGS4)

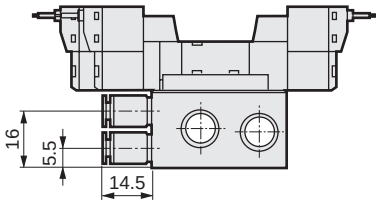

● C-connector:
(C/C0*/C1/C2/C2*/C3)

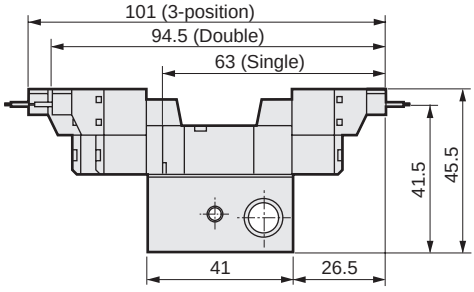

● ø4/ø6 barbed fitting:
(T4/T6/PT4/PT6)

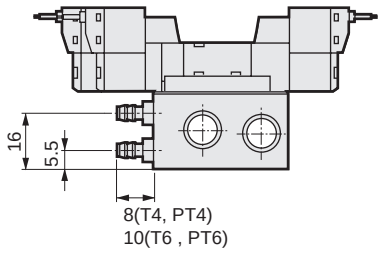

● D-connector:
(D/D0*/D1/D2/D2*/D3)

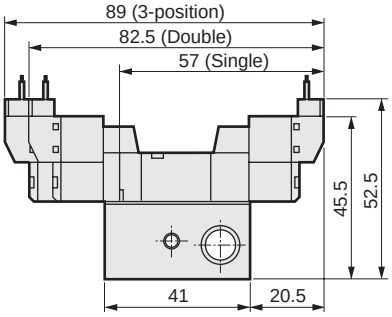



Reduced wiring manifold
Pilot operated 5-port valve
Sub-plate piping

M4SB0 Series

● Cylinder bore size: ø6 to ø25

RoHS CAD

JIS symbol

● 5-port valve

2 position single

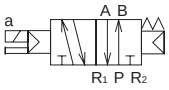

2-position double



3-position
All ports closed

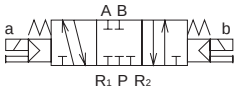

3-position A/B/R connection

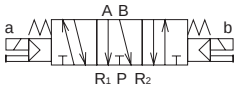

3-position P/A/B connection

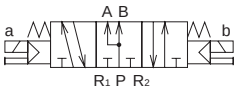

Common specifications

Item	Description
Manifold method	Manifold integrated
Manifold	Common supply, common exhaust*1
Station No.	2 to 20 stations
Valve and operation	Pilot operated soft spool valve
Working fluid	Compressed air
Max. working pressureMPa	0.7
Min. working pressure MPa	0.2
Proof pressure MPa	1.05
Ambient temperature°C	5 to 50
Fluid temperature °C	5 to 50
Lubrication	Not required
Degree of protection	Dust-proof
Vibration resistancem/s^2	50 or less
Shock resistancem/s^2	300 or less
Atmosphere	Cannot be used in corrosive gas environment.

Electrical specifications

Item	Description	
Rated voltage V	24 DC	12 DC
Voltage fluctuation range	±10%	
Holding current A	0.029	0.058
Power consumption W (*2))	0.7	0.7
Thermal class	B	
Temperature rise°C	50	

*1: The pilot exhaust for 4SB0 is centralized with port R.
*2:The power consumption for the 6/5 VDC will be 1.0W.
The power consumption for ozone-proof specifications (P11) will be 1.0 W.

Individual specifications

Item		M4SB0
Port size (*3)	Port P	M5/Rc1/8
	Port A/B	M5
	Port R	Rc1/8
Manifold base Weight calculation formula (n:Station No.) g	Port P: M5	20n+146
	Port P: Rc1/8	21n+136

*3: For the port size of P and A/B-ports, there are options other than those listed above.
Refer to item Ⓑ of How to order on the next page.
*4: The manifold weight is the value when equipped with wiring section.

Performance/characteristics

Item		M4SB0
Response time (*5) ms	2-position	20 or less
	3-position	30 or less

*5: The response times are values with supply pressure of 0.5 MPa, without lubrication, and with the power ON. They depend on the pressure and the lubricant quality.

Flow characteristics

Model No.	Solenoid position	Port size	P → A/B		A/B→R	
			C(dm^3/(s·bar))	b	C(dm^3/(s·bar))	b
M4SB0	2-position	Port P: M5/Rc1/8	0.30	0.15	0.30	0.21
	3-position	Port A/B: M5, port R: Rc1/8	0.29	0.14	0.30	0.20

*6: Be careful when using the T4 specifications (ø4 barbed fitting use) as the flow rate will be constricted depending on the effective cross-sectional area of the fitting.
*7: Effective cross-sectional area S and sonic conductance C are converted as S ≈ 5.0 × C.

[Mix manifold]

● How to list combination descriptions
When selecting a combination manifold (write 8 from Ⓐ), list the code (refer to table on right) for required functions and the arrangement No. (numbering up to specified station No. with left side as 1) in the field for remarks below the normal model No. display as shown in the example.

Code	Function
S1	2 position single
S2	2-position double
S3	3-position all ports closed
S4	3-position A/B/R connection
S5	3-position P/A/B connection
MP	Masking plate

1	2	3	4	5	6	7
2-position Single (S1)	2-position Double (S2)	3-position All ports closed (S3)	3-position All ports closed (S3)	2-position Double (S2)	2-position Single (S1)	3-position A/B/R connection (S4)

Example

The model No. when using a combination manifold of 7 stations with an array such as that in the figure at left with the A/B/port Ps of M5 and 24 VDC is

M4SB080-M5-C4T50-7-3-222100

S1=1,6 S2=2,5 S3=3,4 S4=7
Code Position

● With a mix manifold, when using 10 or more actuators of the same model No., specify using the codes in the table below.

Actuator quantity	10	11	12	13	14	15	16	17	18	19
Code	A	B	C	D	E	F	G	H	I	J

S1	S2	S3	S4	S5	MP
2	2	2	1	0	0

How to order reduced wiring manifold

● Single solenoid valve for manifold (sub-plate piping)

4SB0 1 9 – 00 – M1 C4 —— 3

● Reduced wiring manifold

M 4SB0 8 0 – M5 – M1 C4T31 – 5 – 3 – 2 2 0 0 0 1

Indicate the valve function based quantity display position when using a mix manifold.
Refer to page 1248.

Model No. / Fixed code

Ⓐ Solenoid position

Code	Description
Ⓐ Solenoid position	
1	2 position single
2	2-position double
3	3-position all ports closed
4	3-position A/B/R connection
5	3-position P/A/B connection
8	Mix manifold (when there are multiple solenoid positions)

Ⓑ Port size

Port	A/B		P	R
M5	M5		M5	Rc 1/8
GS4	ø4 push-in fitting	(*1)		
T4	ø4 barbed fitting	(*2)		
T6	ø6 barbed fitting	(*2)		
PM5	M5		Rc 1/8	Rc 1/8
PGS4	ø4 push-in fitting	(*1)		
PT4	ø4 barbed fitting	(*2)		
PT6	ø6 barbed fitting	(*2)		

● Refer to page 1255 for how to order manifold bases and masking plates.
● Refer to page 1253 for the model No. of cables with D sub-connector.
● Refer to page 1255 for the model No. of cables for a flat cable connector.

Ⓒ Manual override

Ⓒ Manual override	
Blank	Manual override of non-locking
M1	Locking manual override

Ⓓ Electrical connections
Note: Refer to page 1234 for the circuit diagram with a surge suppressor/lamp.

Ⓓ Electrical connections	
C4	C-connector (for T31/T50) (*3) with surge suppressor and indicator lamp
D4	D-connector (T30) (*3) with surge suppressor and indicator lamp
C4T31	D-sub-connector lateral facing type with surge suppressor and indicator lamp
D4T30	D-sub-connector upward facing type with surge suppressor and indicator lamp
C4T50	Flat cable connector with surge suppressor and indicator lamp

Ⓔ Station No.

Ⓔ Station No.		
4 to 20	4 to 20 stations	(*4)

Ⓕ Voltage

Ⓕ Voltage		
3	Standard	24 VDC
4	Standard	12 VDC
DC6V	Option	6 VDC
DC5V	Option	5 VDC

⚠ Precautions for model No. selection

*1: For GS4, push-in fitting GWS4-M5-S screws into the A/B-port.
*2: For T4 and T6, FTS4-M5 and FTS6-M5 screw into the A/B-port.
*3: C4 and D4 are only single solenoid valves for 4SB0 manifolds.
A reduced wiring socket assembly (length of 270 mm) will be attached.
*4: T30/T31 has a max. number of single solenoids of 20 stations while T50 has a max. number of single solenoids of 16 stations.

[Example of model No.]

● Reduced wiring manifold

M4SB010-M5-C4T50-7-3

Model: M4SB0
Ⓐ Solenoid position : 2-position single
Ⓑ Port size : A/B/P-port = M5, R-port = Rc1/8
Ⓒ Manual override : Non-locking manual override
Ⓓ Electrical connections: Flat cable connector
Ⓔ Station No. : 7 stations
Ⓕ Voltage : 24 VDC

Ozone-proof specifications (Ending Page 5)

** - Voltage - **P11**

Dimensions

M4SB0*0-M5-D4T30

● D sub-connector upward facing: (Port P M5)

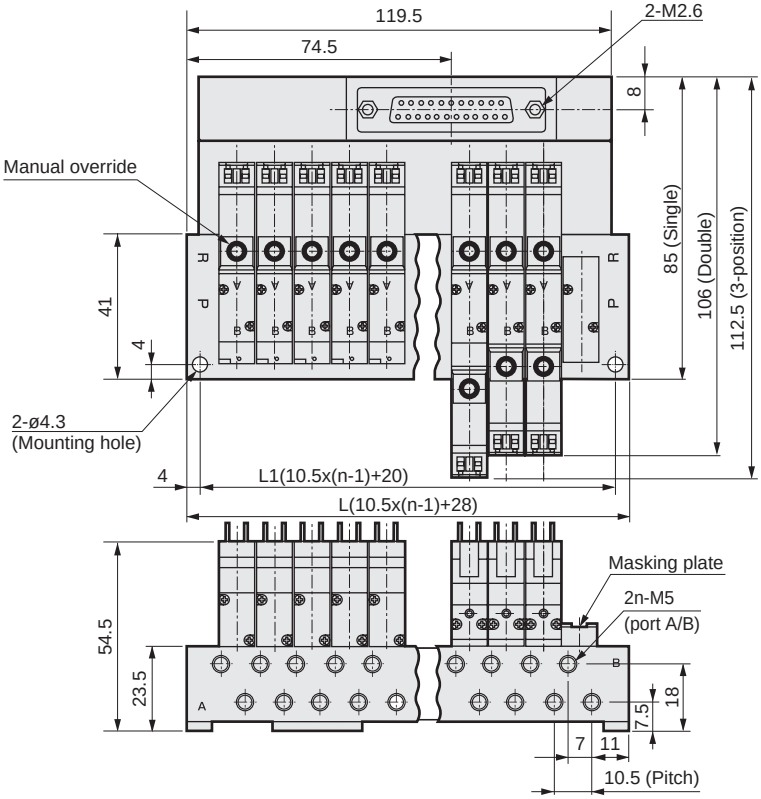

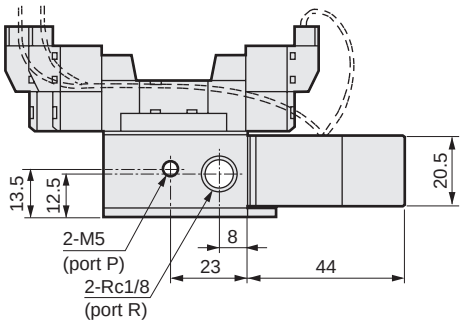

M4SB0*0-M5-C4T31

● D sub-connector lateral facing: (Port P M5)

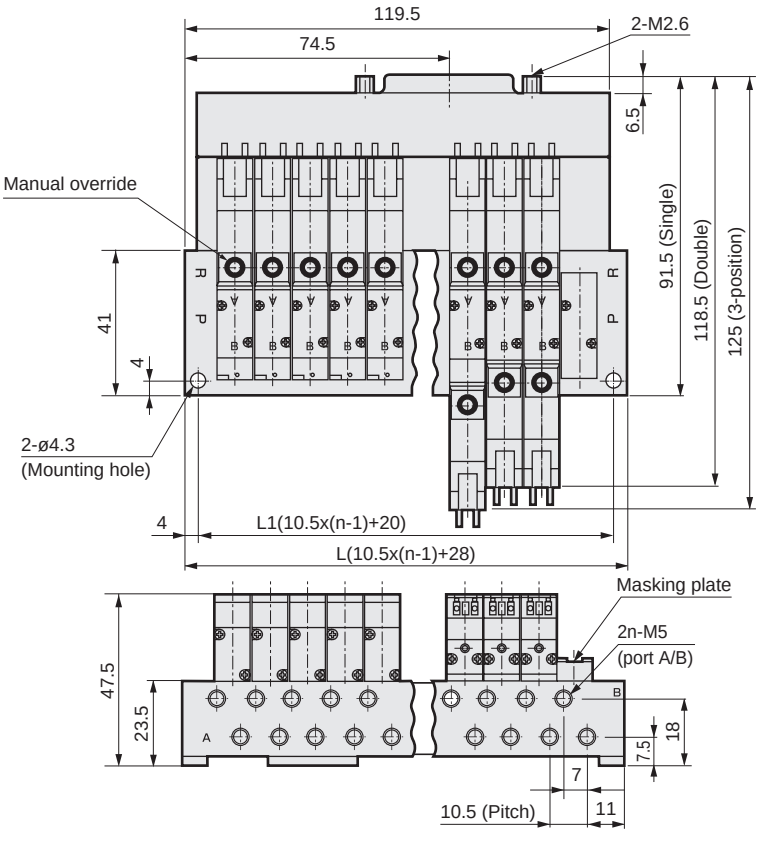

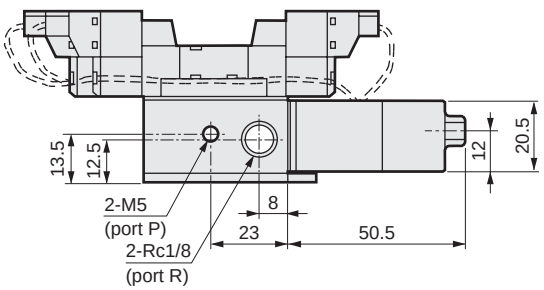

Station No.	4	5	6	7	8	9	10	11	12	13	14	15	16	17	18	19	20
L1	51.5	62	72.5	83	93.5	104	114.5	125	135.5	146	156.5	167	177.5	188	198.5	209	219.5
L	59.5	70	80.5	91	101.5	112	122.5	133	143.5	154	164.5	175	185.5	196	206.5	217	227.5

Dimensions

- Port A/B M5, port P 1/8: (PM5)
- ø4 push-in fitting: (GS4/PGS4)
- ø4/ø6 barbed fitting: (T4/T6/PT4/PT6)

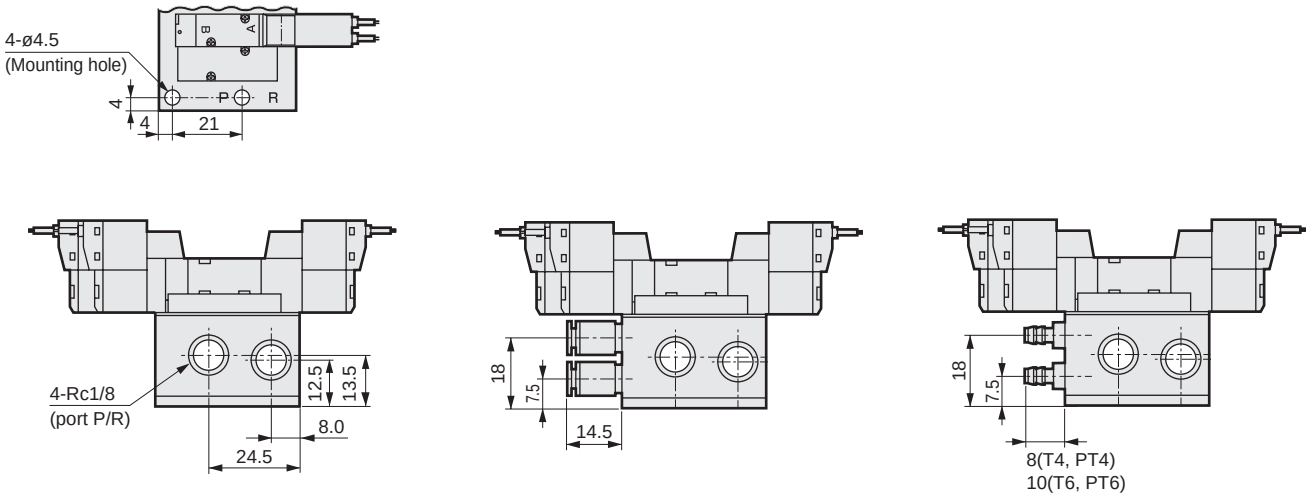

M4SB0*0-M5-C4T50

- Flat cable connector: (Port P M5)

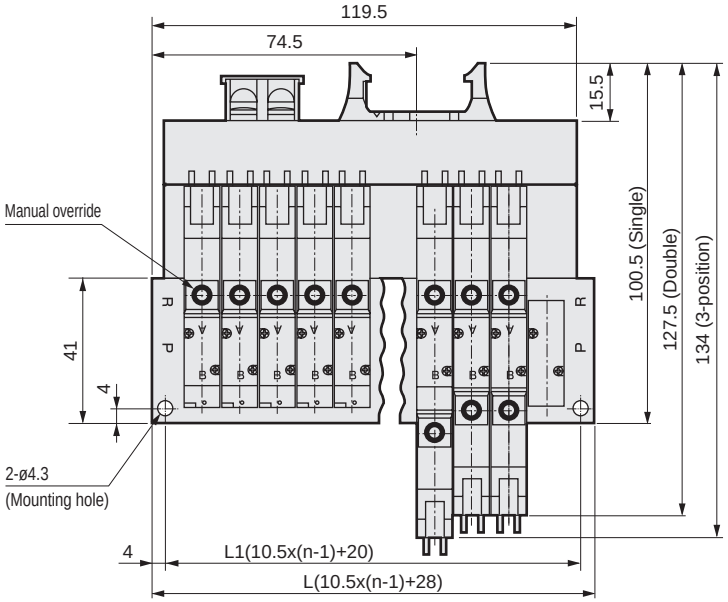

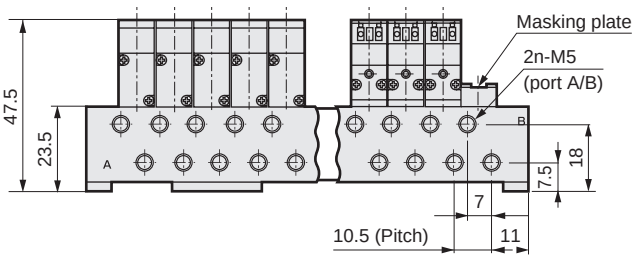

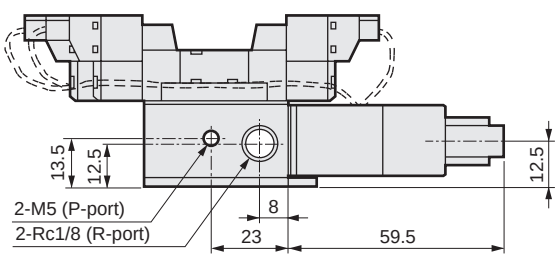

Station No.	4	5	6	7	8	9	10	11	12	13	14	15	16
L1	51.5	62	72.5	83	93.5	104	114.5	125	135.5	146	156.5	167	177.5
L	59.5	70	80.5	91	101.5	112	122.5	133	143.5	154	164.5	175	185.5

D sub-connector: Wiring method T30/T31

T30/T31 Connectors

The connector used for T30/T31 wiring, called a D sub-connector, is used widely for FA and OA devices. The 25P in particular is also an RS-232-C Standards designated connector, used for personal computer communication. The manifold station numbers are set in order from left with b side solenoid side (cap side for single) facing forward.

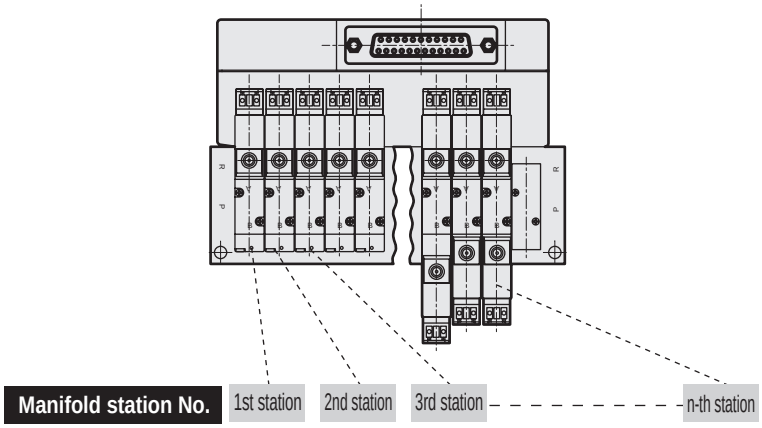

Precautions for connector T30/T31

(1) Signal arrays of the PC output unit must match signal arrays of the valve side.
(2) The working power is 12/24 VDC dedicated.
(3) A voltage drop may occur due to simultaneous energizing or cable length. Confirm that the voltage drop for the solenoid is within 10% of the rated voltage.
(4) These are +COM specifications.

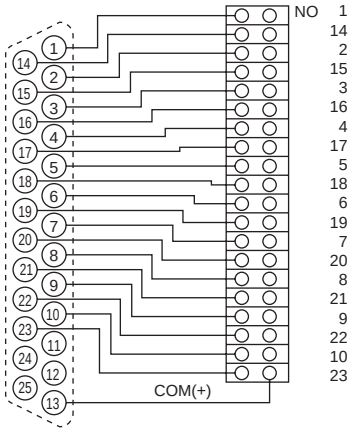

[Internal circuit]

Connector pin array (example) of wiring method T30/T31

Note: The numerals of valve numbers 1a, 1b, 2a, 2b ... indicate the order of stations first station, second station... and the letters “a” and “b” indicate the “a side” solenoid and “b side” solenoid, respectively.

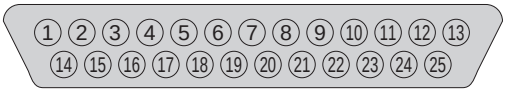

● For single solenoid valve
(supports max. manifold No. up to 20 points)

Pin No.	1	2	3	4	5	6	7	8	9	10	11	12	13
Valve No.	1a	3a	5a	7a	9a	11a	13a	15a	17a	19a			COM(+)
Pin No.	**14**	**15**	**16**	**17**	**18**	**19**	**20**	**21**	**22**	**23**	**24**	**25**	
Valve No.	2a	4a	6a	8a	10a	12a	14a	16a	18a	20a			

● For double solenoid valve
(supports max. manifold No. up to 10 points)

Pin No.	1	2	3	4	5	6	7	8	9	10	11	12	13
Valve No.	1a	2a	3a	4a	5a	6a	7a	8a	9a	10a			COM(+)
Pin No.	**14**	**15**	**16**	**17**	**18**	**19**	**20**	**21**	**22**	**23**	**24**	**25**	
Valve No.	1b	2b	3b	4b	5b	6b	7b	8b	9b	10b			

● For mixed use (single/double mixture)
(supports max. solenoid No. up to 20 points)

Pin No.	1	2	3	4	5	6	7	8	9	10	11	12	13
Valve No.	1a	3a	4a	5a	7a	8a	10a	11b	12b	14a			COM(+)
Pin No.	**14**	**15**	**16**	**17**	**18**	**19**	**20**	**21**	**22**	**23**	**24**	**25**	
Valve No.	2a	3b	4b	5a	7b	9a	11a	12a	13a	15a			

How to order cable with D sub-connector

N4T - CABLE - D 0 0 - 1

* Each pneumatic valve model can be used for D sub-connector T30/T31.

Ⓐ User interface

Ⓑ Cable length

Code	Model N4T
Ⓐ User interface	
0	Cut only
1	With round terminal for M3.5 screw
Ⓑ Cable length	
1	1 m
3	3 m
5	5 m

D sub-connector terminal No. and conductor

● N4T-CABLE-D00-Ⓑ

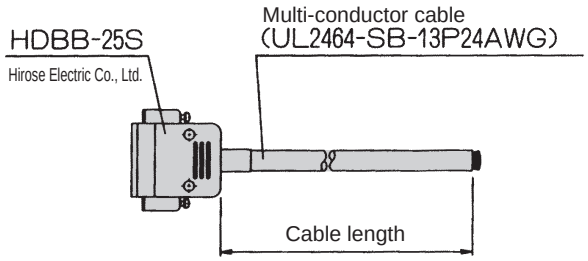

D sub-connector terminal No.		1	2	3	4	5	6	7	8	9	10	11	12	13
Core identification	Insulator color	Orange	Orange	Yellow	Yellow	Green	Green	Gray	Gray	White	White	Orange	Orange	Yellow
	Mark	1 point	1 point	1 point	1 point	1 point	1 point	1 point	1 point	1 point	1 point	2 points	2 points	2 points
	Mark color	Black	Red	Black	Red	Black	Red	Black	Red	Black	Red	Black	Red	Black
D sub-connector terminal No.		**14**	**15**	**16**	**17**	**18**	**19**	**20**	**21**	**22**	**23**	**24**	**25**	
Core identification	Insulator color	Yellow	Green	Green	Gray	Gray	White	White	Orange	Orange	Yellow	Yellow	Green	
	Mark	2 points	2 points	2 points	2 points	2 points	2 points	2 points	3 points	3 points	3 points	3 points	3 points	
	Mark color	Red	Black	Red	Black	Red	Black	Red	Black	Red	Black	Red	Black	

● N4T-CABLE-D01-Ⓑ

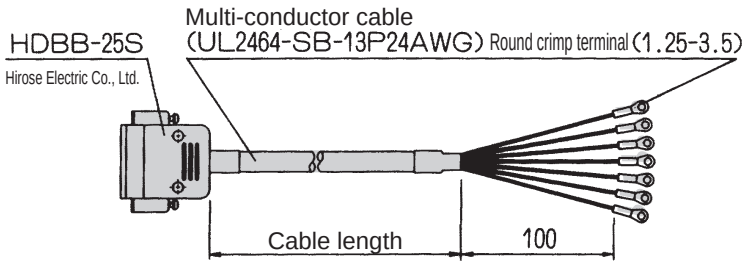

D sub-connector terminal No.		1	2	3	4	5	6	7	8	9	10	11	12	13
Core identification	Insulator color	Orange	Orange	Yellow	Yellow	Green	Green	Gray	Gray	White	White	Orange	Orange	Yellow
	Mark	1 point	1 point	1 point	1 point	1 point	1 point	1 point	1 point	1 point	1 point	2 points	2 points	2 points
	Mark color	Black	Red	Black	Red	Black	Red	Black	Red	Black	Red	Black	Red	Black
Mark tube No.		1	2	3	4	5	6	7	8	9	10	11	12	13
D sub-connector terminal No.		**14**	**15**	**16**	**17**	**18**	**19**	**20**	**21**	**22**	**23**	**24**	**25**	
Core identification	Insulator color	Yellow	Green	Green	Gray	Gray	White	White	Orange	Orange	Yellow	Yellow	Green	
	Mark	2 points	2 points	2 points	2 points	2 points	2 points	2 points	3 points	3 points	3 points	3 points	3 points	
	Mark color	Red	Black	Red	Black	Red	Black	Red	Black	Red	Black	Red	Black	
Mark tube No.		14	15	16	17	18	19	20	21	22	23	24	25	

* Up to 24 points can be used. Cut the wires for surplus points before use.

Flat cable connector: wiring method T50

T50 Connectors

The connector used for T50 wiring method complies with MIL Standards (MIL-C-83503). Wiring work is simplified with the pressure welded flat cable. Pin numbers are assigned differently based on the PLC manufacturer, but the function assignment is the same. Layout using connectors and the triangular mark (▼) shown below as a reference. The ▼ mark is the reference for both plug and socket. The manifold station numbers are set in order from left with b side solenoid side (cap side for single) facing forward.

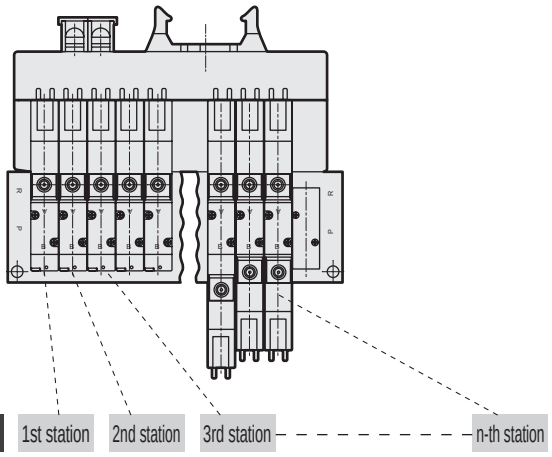

Precautions for connector T50

(1) Signal arrays of the PLC output unit must match signal arrays on the valve side. Direct connections with the PLC are limited. Use the dedicated cable for each PLC manufacturer.
(2) The working power is 12/24 VDC dedicated.
(3) When connecting the T50 to a general output unit, use the + terminal (20, 10) of the 20P connector as the plus side common, and use the NPN transistor output open collector for the drive circuit.
(4) Never connect this manifold to the input unit, as major failures could occur in this device and in the peripherals. Be sure to connect the manifold to the output unit.
(5) A voltage drop may occur due to simultaneous energizing or cable length. Confirm that the voltage drop for the solenoid is within 10% of the rated voltage.

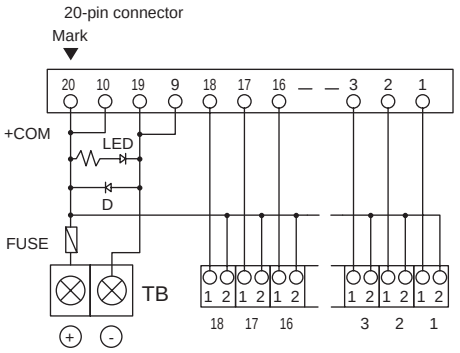

[Internal circuit]

Connector pin array (example) of wiring method T50

Note: The numerals of valve numbers 1a, 1b, 2a, 2b ... indicate the order of stations first station, second station... and the letters “a” and “b” indicate the “a side” solenoid and “b side” solenoid, respectively.

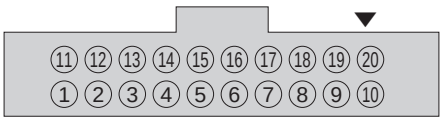

● For single solenoid valve
(Supports up to manifold max. station number of 16 stations)

Pin No.	11	12	13	14	15	16	17	18	19	20
Valve No.	9a	10a	11a	12a	13a	14a	15a	16a	- Power supply	+ Power supply
Pin No.	**1**	**2**	**3**	**4**	**5**	**6**	**7**	**8**	**9**	**10**
Valve No.	1a	2a	3a	4a	5a	6a	7a	8a	- Power supply	+ Power supply

● For double solenoid valve
(Supports up to manifold max. station number of 8 stations)

Pin No.	11	12	13	14	15	16	17	18	19	20
Valve No.	5a	5b	6a	6b	7a	7b	8a	8b	- Power supply	+ Power supply
Pin No.	**1**	**2**	**3**	**4**	**5**	**6**	**7**	**8**	**9**	**10**
Valve No.	1a	1b	2a	2b	3a	3b	4a	4b	- Power supply	+ Power supply

● For mixed use (single/double mixture)
(Supports max. No. of solenoid valves up to 16 points)

Pin No.	11	12	13	14	15	16	17	18	19	20
Valve No.	7a	7b	8a	9a	10a	10b	11a	11b	- Power supply	+ Power supply
Pin No.	**1**	**2**	**3**	**4**	**5**	**6**	**7**	**8**	**9**	**10**
Valve No.	1a	2a	3a	3b	4a	4b	5a	6a	- Power supply	+ Power supply

Example of wiring connection (recommended combination)

● Use with the combination below.

Wiring method	Example of connection cable	PC and PC-related products		
		Manufacturer	PC	Connection cable
D sub-connector upward facing (**T30**) **D** sub-connector lateral facing (**T31**) 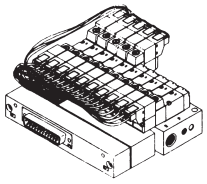	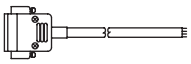			Cable with D sub-connector (Refer to page 1253 for cable model No. and details.)
				

*: Set the power supply voltage for valve activation with attention to voltage drop of the PLC and the flat cable.

How to order manifold base/masking plate

● Manifold base

B4SA0 – **M3** – **Station No.**

(Body piping)

B4SB0 – **M5** – **Station No.**

(Sub-base piping)

Code	Description
2 to 20	2 stations to 20 stations

Note: Precautions when mounting valve on manifold base
The mounting screws attached to the valve are tapping screws equivalent to M1.7. Accordingly, the manifold base has not been threaded for attachment of the valve. During the initial installation, mounting will be completed while tapping the base. Furthermore, smoother mounting is possible by applying a small amount of oil (CRC/turbine oil, etc.) to the tip of the screws.

● Masking plate (gasket, mounting screws attached)

4SA0 – **MP**

(Body piping)

4SB0 – **MP**

(Sub-base piping)

Pneumatic system equipment selection guide

Pneumatic system selection guide

The cylinder average speed is obtained from the combination of 4SA0/4SB0 series and piping system.
It is expressed by the average speed obtained by dividing the stroke by the time the piston rod moved after starting, when the cylinder piston rod is installed facing upward. When the load factor is 50%, the average speed should be the approximate cylinder speed multiplied by 0.5.

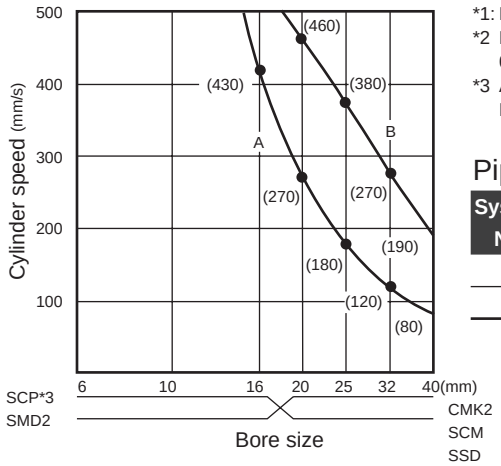

Clean air system components

Part name	Model No.	Port size (*1)	Max. flow rate (ℓ/min (ANR)) (*2)
F.R.L kit	K60570-1C-GB	Rc1/8(6A)	200
	C1000-6-W	Rc1/8(6A)	450
F.R. unit	W1000-6-W	Rc1/8(6A)	830
Air filter (F)	F1000-6-W	Rc1/8(6A)	460
Regulator (R)	B2019-1C	Rc1/8(6A)	500
	R1000-6-W	Rc1/8(6A)	770
Lubricator (L)	A3019-1C	Rc1/8(6A)	100
	L1000-6-W	Rc1/8(6A)	550

*1: Rc is the same as PT.
*2 F.R.L kit, F. R. unit, regulator
0.7 MPa primary pressure, 0.5 MPa set pressure, 0.1 MPa pressure drop
*3 Air filter, lubricator
Primary pressure 0.7 MPa, pressure drop 0.02 MPa

Piping system

System No.	Speed controller	Silencer	Piping Piping length between valve and cylinder within ( )	Composite effective sectional area by system	Max. flow rate when (ℓ/min. (ANR)) P = 0.5 MPa
A	SC-M5	—	ø4 x ø2.5 nylon tube (1 m)	0.5 mm^2	34
B	SC1-6	SL-M5	ø6 x ø4 nylon tube (1 m)	1.3 mm^2	84

C type / D-connector wiring method

(Referring to the figure below, wire the connectors with (1) to (4))

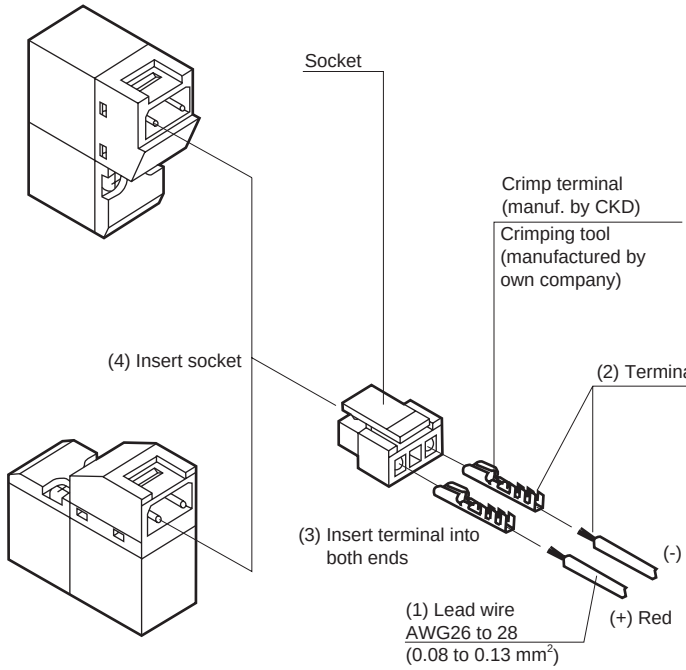

[Procedure]

(1) Peel the sheath at the end of the lead wire by 2 to 3 mm.
(2) Crimp the lead wire with a special tool.
(3) Insert the terminal into the holes at both ends of the socket.
(Note) Check the orientation for insertion.
(4) Insert the socket into the solenoid valve connector section.

Pilot operated 3, 4, 5-port valve 4K Series

Overview

The 4KA/4KB series are compact 3, 4, and 5-port valves with a broad lineup of valve widths of 15 mm, 18 mm, 23 mm, and 29 mm. Suitable for operating cylinders of ø40 to ø160

Features

High reliability

The newly designed soft spool has increased reliability. With the manifold, the P-port comes standardly equipped with a filter. (M3KA1/M4KA1 to 2/M4KB1 to 2)

Long service life

Long service life is realized through use of a newly developed packing with excellent wear resistance.

Responsivity

Responsivity upon initial operation, etc., is stabilized with the newly developed special packing.

Compact

Compact design contributes to miniaturization of the devices into which the units are built.

Wide array of electrical connections

A wide variety is available, including lead wire, terminal box, and various connectors. In addition, it is also possible to combine operation display indicators and surge suppressors.

High density integration

With free combinations of manifolds, it is possible to easily reduce or expand units.

Page

Metal base **4KA/4KB** Series 1259

Block manifold **MN4KB** Series 1329

Master valve **4KA/4KB** Series 1349

Technical data

(1) Terminal box wiring/connector connection method 1348
(2) Air pressure system selection guide 1362

⚠ Safety precautions 1363

4KA/4KB

Pneumatic valve metal base

Pilot operated 3, 4, 5-port valve

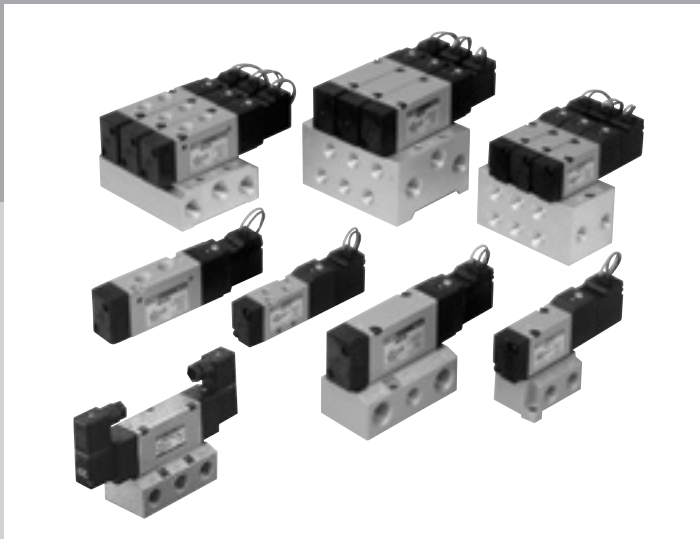

CONTENTS

Series variation 1260
Electrical connections list (wire connections/circuit) 1262

Discrete valve

● Body piping (3KA1/4KA1 to 4) 1264
● Sub-plate piping (4KB1 to 4) 1282

Individual wiring manifold

● Body piping (M3KA1/M4KA1 to 4) 1298
● Sub-plate piping (M4KB1 to 4) 1310

Technical data

(1) Terminal box wiring/connector connection method 1348
(2) Air pressure system selection guide 1362
⚠ Safety precautions 1363

Series variation

4KA/4KB Series

Series external appearance				Model No.	Position Number of solenoids JIS symbol	Valve performance: Flow characteristics C [dm³/(s·bar)] *1	Valve performance: Applicable cylinder bore size	Voltage (V)	
Single unit	Body piping		3-port	3KA1	**3KA1** ● 2-position NC single  ● 2-position NO single 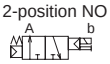 ● 2-position double 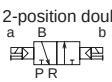 **4KA1 to 4KA4** **4KB2 to 4KB4** ● 2-position single  * 4KB1 only 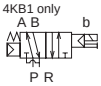 ● 2-position double 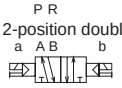 ● 3-position all ports closed 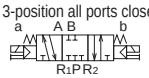 * 4KB1 only 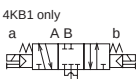 ● 3-position A/B/R connection 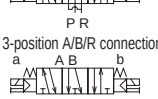 * 4KB1 only 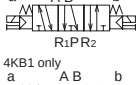 ● 3-position P/A/B connection 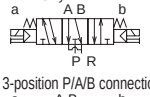 * 4KB1 only 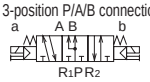	0.65	ø20 to ø40	100 AC 200 AC 24 DC Option 110 AC 220 AC 12 DC	
				4KA1		0.60 to 0.68			
			5-port	4KA2		2.3 to 2.9	ø40 to ø80		
				4KA3		4.1 to 5.6	ø63 to ø100		
				4KA4		8.2 to 11	ø125 to ø160		
	Sub-plate piping		5-port	4KB1		0.63 to 1.2	ø20 to ø40		
				4KB2		2.4 to 3.0	ø40 to ø80		
				4KB3		5.6 to 6.6	ø63 to ø100		
				4KB4		10 to 13	ø125 to ø160		
Metal base / Individual wiring manifold	Body piping		3-port	M3KA1		0.69	ø20 to ø40	100 AC 200 AC 24 DC Option 110 AC 220 AC 12 DC	
				M4KA1		0.69 to 0.97			
			5-port	M4KA2		2.4 to 3.0	ø40 to ø80		
				M4KA3		4.1 to 5.9	ø63 to ø100		
				M4KA4		8.3 to 11	ø125 to ø160		
	Sub-plate piping		4-port	M4KB1		0.60 to 0.81	ø20 to ø40		
			5-port	M4KB2		1.8 to 2.1	ø40 to ø80		
				M4KB3		4.3 to 4.8	ø63 to ø100		
				M4KB4		8.6 to 9.4	ø125 to ø160		
Block manifold / Individual wiring manifold	Sub-plate piping	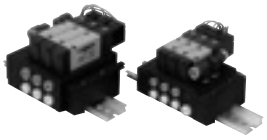	5-port	MN4KB1		0.60 to 0.80	ø20 to ø40		
				MN4KB2		2.3 to 3.1	ø40 to ø80		

*1: Effective cross-sectional area "S" and sonic conductance "C" are converted as S ≈ 5.0 x C.

	Switching position								Port size of A/B port																				Electrical connections				Page
									Push-in fitting					Female thread																			
	2-position single	2-position double	3-position all ports closed	3-position A/B/R connection	3-position P/A/B connection	2-position single NC	2-position single NO	Mix	ø4	ø6	ø8	ø10	ø12	M 5	Rc 1/8	Rc 1/4	Rc 3/8	Rc 1/2	G 1/8	G 1/4	G 3/8	G 1/2	NPT 1/8	NPT 1/4	NPT 3/8	NPT 1/2	Female thread rear piping specifications	Grommet lead wire	Compact terminal box	C-connector	D-connector	
		●				●	●		●	●				●														●	●	●	●	1264
	●	●	●	●	●				●	●				●														●	●	●	●	
	●	●	●	●	●					●	●				●				●				●					●	●	●	●	
	●	●	●	●	●						●	●				●				●				●				●	●	●	●	
	●	●	●	●	●							●	●				●				●				●			●	●	●	●	
	●	●	●	●	●										●				●				●					●	●	●	●	1282
	●	●	●	●	●										●	●			●	●			●					●	●	●	●	
	●	●	●	●	●											●	●			●	●			●	●			●	●	●	●	
	●	●	●	●	●												●	●			●	●			●	●		●	●	●	●	
		●				●	●	●	●	●				●														●	●	●	●	1298
	●	●	●	●	●			●	●	●				●														●	●	●	●	
	●	●	●	●	●			●		●	●				●				●				●					●	●	●	●	
	●	●	●	●	●			●			●	●				●				●				●				●	●	●	●	
	●	●	●	●	●			●				●	●				●				●				●			●	●	●	●	
	●	●	●	●	●			●		●				●	●				●				●				●	●	●	●	●	1310
	●	●	●	●	●			●		●	●				●	●			●	●			●	●			●	●	●	●	●	
	●	●	●	●	●			●			●	●				●	●			●	●			●	●		●	●	●	●	●	
	●	●	●	●	●			●				●	●				●	●			●	●			●	●	●	●	●	●	●	
	●	●	●	●	●			●	●	●	●			●					●				●					●	●	●	●	1330
	●	●	●	●	●			●		●	●	●																●	●	●	●	

Electrical connections

Blank — Grommet lead wire

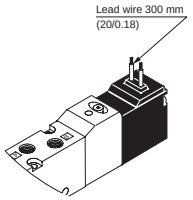

B — Compact terminal box, without lead wire

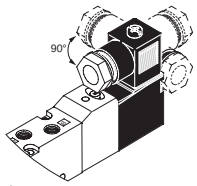

*:4K$^{A}_{B}$3, 4K$^{A}_{B}$4 can only be rotated by 180°.

L — Compact terminal box with lamp

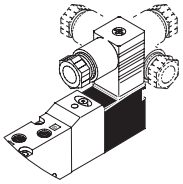

*:4K$^{A}_{B}$3, 4K$^{A}_{B}$4 can only be rotated by 180°.

LS — Compact terminal box, with surge suppressor/lamp

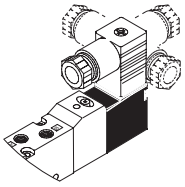

*:4K$^{A}_{B}$3, 4K$^{A}_{B}$4 can only be rotated by 180°.

C — C-connector lead wire

● Lead wire length
C : 300 mm
C00 : 500 mm
C01 : 1000 mm
C02 : 2000 mm
C03 : 3000 mm

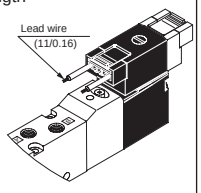

C1 — C-connector without lead wire

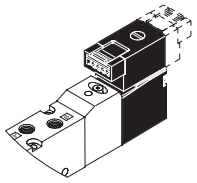

C2 — C-connector with lead wire with surge suppressor/lamp

● Lead wire length
C2 : 300 mm
C20 : 500 mm
C21 : 1000 mm
C22 : 2000 mm
C23 : 3000 mm

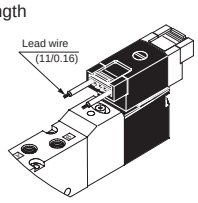

C3 — C-connector without lead wire with surge suppressor/lamp

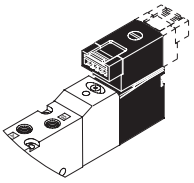

D — D-connector lead wire

● Lead wire length
D : 300 mm
D00 : 500 mm
D01 : 1000 mm
D02 : 2000 mm
D03 : 3000 mm

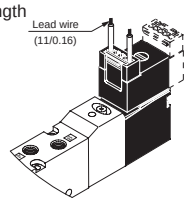

D1 — D-connector without lead wire

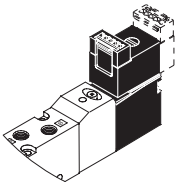

D2 — D-connector/with lead wire with surge suppressor/lamp

● Lead wire length
D2 : 300 mm
D20 : 500 mm
D21 : 1000 mm
D22 : 2000 mm
D23 : 3000 mm

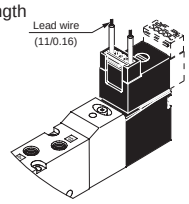

D3 — D-connector/without lead wire with surge suppressor/lamp

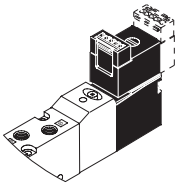

Manual override

Blank — Non-locking

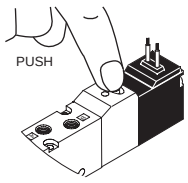

* : This will operate for as long as the switch is being pressed.

M1 — Locking

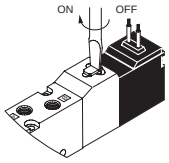

* : Operates in the ON direction. Note that normally this should be returned to OFF.

Other options

S — Surge suppressor attached

AC, DC (other than grommet lead wire)

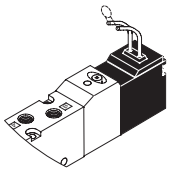

DC (grommet lead wire only)

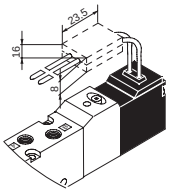

(Suppression connector)

P — With mounting plate

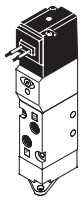

K — External pilot

When using at low pressure (0.15 MPa or less) which is less than or equal to the min. working pressure, use the following external pilot. However, be sure to pressurize the PA port.

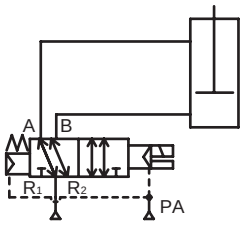

PA: 0.2 MPa or more

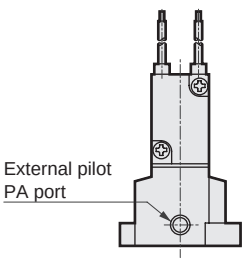

Electric connection circuit diagram

Voltage type	Option	Wiring circuit	Wiring method
AC	-	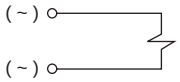	Grommet lead wire Terminal box (B) C-connector (C/C0*/C1) D-connector (D/D0*/D1)
	With indicator lamp	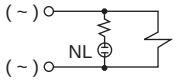	Terminal box (L)
	With surge suppressor and indicator lamp	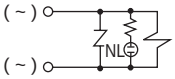 Varistor	Terminal box (LS) C-connector (C2/C2*/C3) D-connector (D2/D2*/D3)
	Surge suppressor attached (Option)	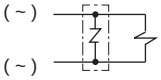 Varistor	Surge suppressor attached (S)
DC	-	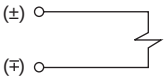	Grommet lead wire Terminal box (B) C-connector (C/C0*/C1) D-connector (D/D0*/D1)
	With indicator lamp	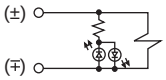	Terminal box (L) However, 4KA/B1 and 4KA/B2 come with surge suppressors and indicator lamps.
	With surge suppressor and indicator lamp	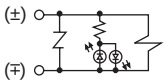 Varistor	Terminal box (LS) C-connector (C2/C2*/C3) D-connector (D2/D2*/D3)
	Surge suppressor attached (Option)	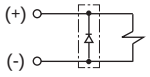 Diode * Diode has polarity.	Grommet lead wire (24 VDC or less) Surge suppressor attached (S)
		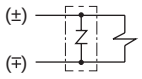 Varistor * Varistor has no polarity.	Surge suppressor attached (S)



Discrete valve body piping
Pilot operated 3, 5-port pneumatic valve

3KA1/4KA1/2/3/4 Series

● Cylinder bore size: ø20 to ø160

CE Refer to the Ending for details. RoHS CAD

JIS symbol

● 3-port valve
2-position NC single

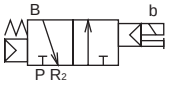

● 3-port valve
2-position NO single

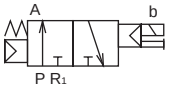

● 3-port valve
2-position double

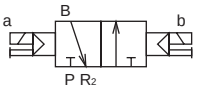

● 5-port valve
2-position single



● 5-port valve
2-position double

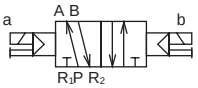

● 5-port valve
3-position all ports closed

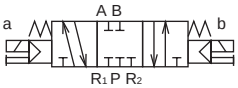

● 5-port valve
3-position A/B/R connection

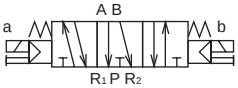

● 5-port valve
3-position P/A/B connection



Common specifications

Item	Description
Valve and operation	Pilot operated soft spool valve
Working fluid	Compressed air
Max. working pressure MPa	0.70 (≈100 psi, 7 bar)
Min. working pressure MPa	Refer to Individual specifications listed below
Proof pressure MPa	1.05 (≈150 psi, 10.5 bar)
Ambient temperature °C	-5 (23°F) to 50 (122°F) (no freezing)
Fluid temperature °C	5 (41°F) to 50 (122°F)
Lubrication	Not required
Degree of protection	Dust-proof
Vibration resistance m/s^2	50 or less
Shock resistance m/s^2	300 or less
Atmosphere	Cannot be used in corrosive gas environment.

Electrical specifications

Item			3KA1, 4KA1/2	4KA3/4
Rated voltage	AC		100,200 (50 / 60 Hz)	
V	DC		24	
Voltage fluctuation range			±10%	
Starting current A	AC	100 V	0.056/0.044	0.046/0.042
	AC	200 V	0.028/0.022	0.023/0.021
Holding current A	AC	100 V	0.028/0.022	0.023/0.021
	AC	200 V	0.014/0.011	
	DC	24 V	0.075	
Power consumption W ( ): With indicator	AC	100 V	1.8 / 1.4 (1.8 / 1.5)	1.6 / 1.3 (1.8 / 1.5)
	AC	200 V	1.8 / 1.4 (1.8 / 1.5)	1.6 / 1.3 (1.8 / 1.5)
	DC	24 V	1.8 (2.0)	
Thermal class			B (molded coil)	
Temperature rise °C			43	30

Reference: 100 VAC 50/60 Hz can be used with a rated voltage of 110 VAC 60 Hz and 200 VAC 50/60 Hz can be used with 220 VAC 60 Hz.

Individual specifications

1 MPa ≈ 145.0 psi, 1 MPa = 10 bar

Item			3KA1	4KA1	4KA2	4KA3	4KA4
Min. working pressure MPa	2-position	Single	0.15	0.15	0.15	0.15	0.15
		Double			0.10	0.10	0.10
	3-position		-	0.20	0.20	0.20	0.20
Port size	P/A/B port		M5 Push-in fitting ø4, ø6	M5 Push-in fitting ø4, ø6	Rc1/8, G1/8, NPT1/8 Push-in fitting ø6, ø8	Rc1/4, G1/4, NPT1/4 Push-in fitting ø8, ø10	Rc3/8, G3/8, NPT3/8 Push-in fitting ø10, ø12
	R1/R2 port		M5	M5	Rc1/8, G1/8, NPT1/8	Rc1/4, G1/4, NPT1/4	Rc3/8, G3/8, NPT3/8

Performance/characteristics by model

Item		3KA1	4KA1	4KA2	4KA3	4KA4
Response time *1 ms	2-position	30 or less	30 or less	30 or less	30 or less	30 or less
	3-position	-	60 or less	60 or less	60 or less	60 or less

*1: The response time is the value at 0.5 MPa working pressure, with no lubrication, and with the power ON. It depends on the pressure and the lubricant quality.

Weight

Item			3KA1	4KA1	4KA2	4KA3	4KA4
Weight g	2-position	Single	70	70	115	214	325
		Double	110	110	155	315	435
	3-position		-	120	170	354	505

Flow characteristics

Model No.	Solenoid position		C[dm³/(s·bar)]	b
3KA1	2-position		0.65	0.37
4KA1	2-position		0.65	0.37
	3-position	All ports closed	0.60	0.32
		A/B/R connection	0.68	0.39
		P/A/B connection	0.61	0.36
4KA2	2-position		2.6	0.43
	3-position	All ports closed	2.3	0.43
		A/B/R connection	2.9	0.34
		P/A/B connection	2.3	0.42
4KA3	2-position		5.6	0.49
	3-position	All ports closed	4.1	0.60
		A/B/R connection	4.1	0.62
		P/A/B connection	4.2	0.68
4KA4	2-position		9.8	0.49
	3-position	All ports closed	8.2	0.54
		A/B/R connection	11	0.50
		P/A/B connection	8.4	0.54

*1: Effective cross-sectional area S and sonic conductance C are converted as S ≈ 5.0 × C.
*2: Flow characteristics are values when the port size is M5 (3KA1, 4KA1), Rc1/8 (4KA2), Rc1/4 (4KA3), or Rc3/8 (4KA4).

Ozone-proof specifications

(Ending Page 5)

** - Voltage - **P11**

Copper and PTFE free specifications

● Copper- and PTFE-based materials are not used in the flow path.

** - Voltage - **P6**

CE marking specifications

** - Voltage - **ST**

• Standard voltage of 24 VDC or less is CE marking-compatible even if the model No. is not indicated with "ST".

3KA1/4KA1 to 4 Series

Discrete valve; body piping

How to order

4KA2 1 0 - 06 - M1 B ○ - AC100V

● Single solenoid valve for manifold

4KA2 1 9 - 06 - M1 B ○ - AC100V

Ⓐ Model No. Ⓑ Solenoid position

Ⓒ Port size

Ⓓ Manual override

Ⓔ Electrical connections
* Refer to page 1263 for the circuit diagram with surge suppressor/lamp.

Ⓕ Other options

Ⓖ Voltage

* Gasket/mounting screw attached (*4)

	Code	Description	Ⓐ Model No. 3KA1	4KA1	4KA2	4KA3	4KA4
Ⓑ Solenoid position	**1**	2-position single		●	●	●	●
	2	2-position double	●	●	●	●	●
	3	3-position all ports closed		●	●	●	●
	4	3-position A/B/R connection		●	●	●	●
	5	3-position P/A/B connection		●	●	●	●
	1	2-position single normally closed	●				
	11	2-position single normally open	●				

	Port	P/A/B port	R1/R2 port (1) = M5 (2) = Rc1/8 (3) = Rc1/4 (4) = Rc3/8				
Ⓒ Port size	**M5**	M5	(1)	(1)			
	06	Rc1/8			(2)		
	08	Rc1/4				(3)	
	10	Rc3/8					(4)
	GS4	ø4 Push-in fitting	(1)	(1)			
	GS6	ø6 Push-in fitting	(1)	(1)	(2)		
	GS8	ø8 Push-in fitting			(2)	(3)	
	GS10	ø10 Push-in fitting				(3)	(4)
	GS12	ø12 Push-in fitting					(4)
	Port	P/A/B port	R1/R2 port (1) = M5 (5) = NPT1/8 (6) = NPT1/4 (7) = NPT3/8				
	06N	NPT1/8			(5)		
	08N	NPT1/4				(6)	
	10N	NPT3/8					(7)
	GS4N	ø4 Push-in fitting	(1)	(1)			
	GS6N	ø6 Push-in fitting	(1)	(1)	(5)		
	GS8N	ø8 Push-in fitting			(5)	(6)	
	GS10N	ø10 Push-in fitting				(6)	(7)
	GS12N	ø12 Push-in fitting					(7)
	Port	P/A/B port	R1/R2 port (1) = M5 (8) = G1/8 (9) = G1/4 (10) = G3/8				
	06G	G1/8			(8)		
	08G	G1/4				(9)	
	10G	G3/8					(10)
	GS4G	ø4 Push-in fitting	(1)	(1)			
	GS6G	ø6 Push-in fitting	(1)	(1)	(8)		
	GS8G	ø8 Push-in fitting			(8)	(9)	
	GS10G	ø10 Push-in fitting				(9)	(10)
	GS12G	ø12 Push-in fitting					(10)

Ⓓ	**Blank**	Non-locking manual override	●	●	●	●	●
	M1	Locking manual override	●	●	●	●	●
Ⓔ	Refer to the electrical connections list on the next page.						
Ⓕ	**Blank**	No option	●	●	●	●	●
	P	Mounting plate (compatible only with 2-position single)	●	●	●	●	●
	S	Surge suppressor attached (*2) (*3)	●	●	●	●	●
	-A	Coolant supported (packing: FKM)	●	●	●	●	●

Ⓖ Voltage	**AC100V**	100 VAC 50/60 Hz	Standard	●	●	●	●	●
	AC200V	200 VAC 50/60 Hz		●	●	●	●	●
	DC24V	24 VDC		●	●	●	●	●
	DC12V	12 VDC	Option	●	●	●	●	●
	AC110V	110 VAC 50/60 Hz		●	●	●	●	●
	AC220V	220 VAC 50/60 Hz		●	●	●	●	●

*** Other custom order products**						
AC24V	●	●	●	●	●	
AC115V	●	●	●	●	●	
AC120V	●	●	●	●	●	

[Table 1] Compact terminal box L/LS compatibility table

Code	Description			3KA1	4KA1	4KA2	4KA3	4KA4	Surge suppressor
L	Without lead wire	With indicator lamp	AC	●	●	●	●	●	
			DC				●	●	
		with surge suppressor/ indicator lamp	AC						
			DC	●	●	●			Integrated
LS	Without lead wire	with surge suppressor/ indicator lamp	AC	●	●	●	●	●	Integrated
			DC				●	●	Integrated

Precautions for model No. selection

*1 : The compact terminal boxes of 3KA1, 4KA1, and 4KA2 and the DC voltage models of L, and LS are equipped with a surge suppressor.

*2 : The surge suppressor for attachment is a suppression connector when the grommet lead wire is 24 VDC or less. (Refer to page 1262)

*3 : The surge suppressor can only be selected when the grommet lead wire or compact terminal box "B" has been selected for the electrical connections.

*4 : With regard to the printed model No., although the model No. when placing an order is "4KA□ □9", the model No. listed on the product name plate will be "4KA□ □0".

[Example of model No.]

4KA210-06-M1BP-AC100V

Ⓐ Model : 4KA2
Ⓑ Solenoid position : 2-position single
Ⓒ Port size : Rc1/8
Ⓓ Manual override : Locking manual override
Ⓔ Electrical connections : Compact terminal box/ without lead wire
Ⓕ Other options : With mounting plate
Ⓖ Voltage :100 VAC 50/60 Hz

[Electrical connections list]

Ⓔ Electrical connections	Code	Description	Ⓐ Model No. 3KA1	4KA1	4KA2	4KA3	4KA4
	Grommet lead wire						
	Blank	Grommet lead wire (300 mm)	●	●	●	●	●
	Compact terminal box						
	B	Without lead wire	●	●	●	●	●
	L	Without lead wire	Refer to [Table 1] on the previous page for details (*1)				
	LS	Without lead wire, with surge suppressor/lamp					
	C-connector (lead wire lateral direction)						
	C	Lead wire length (300 mm)	●	●	●	●	●
	C00	Lead wire length (500 mm)	●	●	●	●	●
	C01	Lead wire length (1000 mm)	●	●	●	●	●
	C02	Lead wire length (2000 mm)	●	●	●	●	●
	C03	Lead wire length (3000 mm)	●	●	●	●	●
	C1	Without lead wire	●	●	●	●	●
	C2	Lead wire length (300 mm) with surge suppressor/lamp	●	●	●	●	●
	C20	Lead wire length (500 mm) with surge suppressor/lamp	●	●	●	●	●
	C21	Lead wire length (1000 mm) with surge suppressor/lamp	●	●	●	●	●
	C22	Lead wire length (2000 mm) with surge suppressor/lamp	●	●	●	●	●
	C23	Lead wire length (3000 mm) with surge suppressor/lamp	●	●	●	●	●
	C3	Without lead wire, with surge suppressor/lamp	●	●	●	●	●
	D-connector (lead wire upward direction)						
	D	Lead wire length (300 mm)	●	●	●	●	●
	D00	Lead wire length (500 mm)	●	●	●	●	●
	D01	Lead wire length (1000 mm)	●	●	●	●	●
	D02	Lead wire length (2000 mm)	●	●	●	●	●
	D03	Lead wire length (3000 mm)	●	●	●	●	●
	D1	Without lead wire	●	●	●	●	●
	D2	Lead wire length (300 mm) with surge suppressor/lamp	●	●	●	●	●
	D20	Lead wire length (500 mm) with surge suppressor/lamp	●	●	●	●	●
	D21	Lead wire length (1000 mm) with surge suppressor/lamp	●	●	●	●	●
	D22	Lead wire length (2000 mm) with surge suppressor/lamp	●	●	●	●	●
	D23	Lead wire length (3000 mm) with surge suppressor/lamp	●	●	●	●	●
	D3	Without lead wire, with surge suppressor/lamp	●	●	●	●	●

Internal structure and parts list

4KA110

● 2-position single

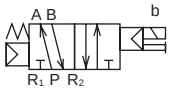

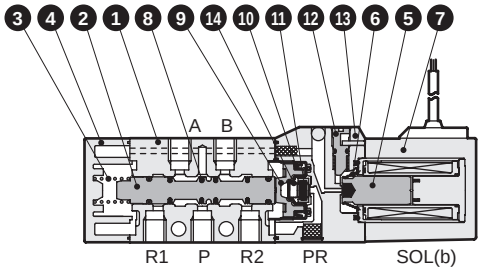

4KA120

● 2-position double

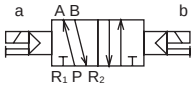

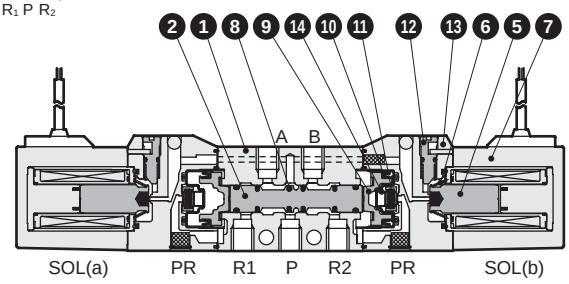

4KA130

● 3-position all ports closed

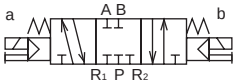

4KA140

● 3-position A/B/R connection



4KA150

● 3-position P/A/B connection



3KA110-NC

● 2-position single / NC

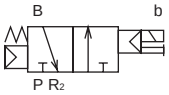

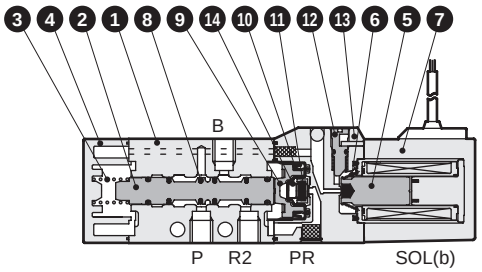

3KA1110-NO

● 2-position single / NO



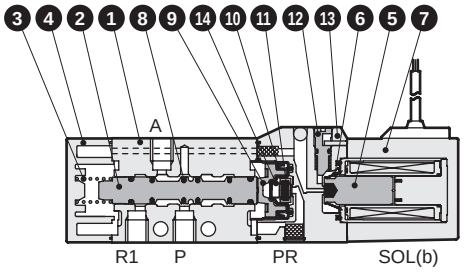

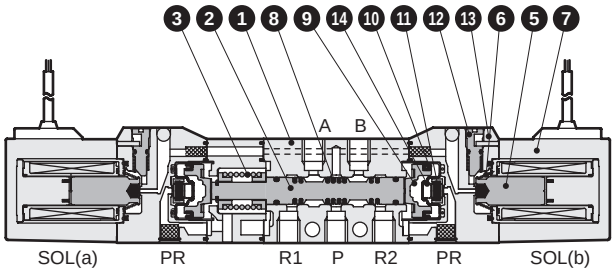

Main parts list

No.	Part name	Material
1	Body	Aluminum alloy die-casting
2	Valving element (spool)	Aluminum
3	Valve spring	Stainless steel
4	Cap	Resin
5	Plunger	-
6	Plunger spring	-
7	Coil assembly	-
8	Spool packing	Nitrile rubber
9	Piston	Resin
10	Piston packing	Nitrile rubber
11	Valve seat	Nitrile rubber
12	Manual button	Resin
13	Pilot valve	Resin
14	Valve seat spring	Stainless steel

Repair parts list

No./part name	2 8	9 10	5 6 7
Model No.	Spool assembly	Piston assembly	Coil assembly *
3KA110 / 3KA1110	4K9-110	4K9-151	4K1L- Ⓔ electrical connection option code - Blank for grommet lead wire COIL - Ⓖ Voltage
3KA120	4K9-118		
4KA110	4K9-110	4K9-151	
4KA120	4K9-118		
4KA130	4K9-111	4K9-152	
4KA140	4K9-112		
4KA150	4K9-113		

* The compact terminal box and connector of the coil assembly will come assembled and included with the options of the descriptions indicated with model No. selection.

Internal structure and parts list

4KA210

● 2-position single

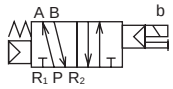

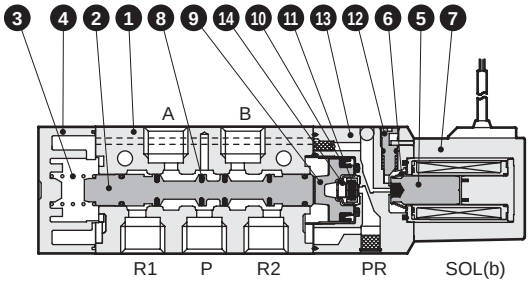

4KA220

● 2-position double

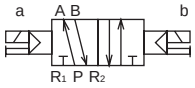

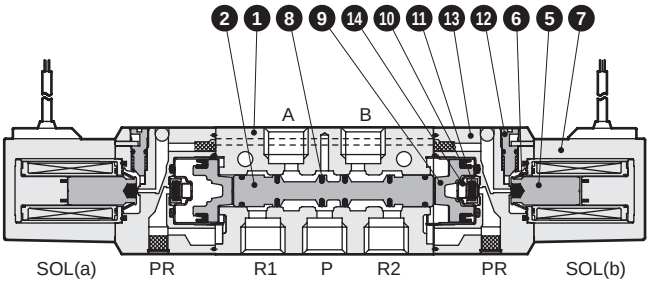

4KA230

● 3-position all ports closed

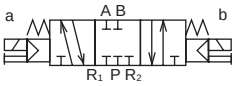

4KA240

● 3-position A/B/R connection



4KA250

● 3-position P/A/B connection



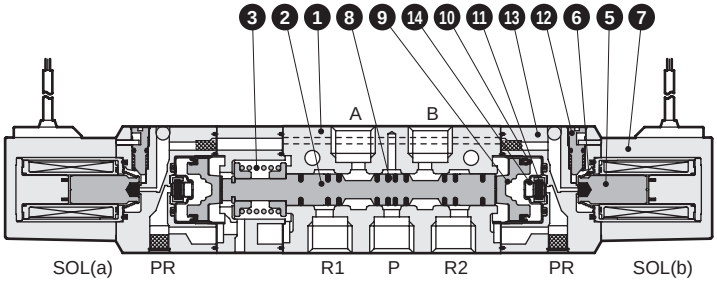

Main parts list

No.	Part name	Material
1	Body	Aluminum alloy die-casting
2	Valving element (spool)	Aluminum
3	Valve spring	Stainless steel
4	Cap	Resin
5	Plunger	-
6	Plunger spring	-
7	Coil assembly	-
8	Spool packing	Nitrile rubber
9	Piston	Resin
10	Piston packing	Nitrile rubber
11	Valve seat	Nitrile rubber
12	Manual button	Resin
13	Pilot valve	Resin
14	Valve seat spring	Stainless steel

Repair parts list

No./part name	2 8	9 10	5 6 7
Model No.	Spool assembly	Piston assembly	Coil assembly *
4KA210	4K9-150	4K9-153	4K1L- E electrical connection option code - Blank for grommet lead wire COIL - G Voltage
4KA220	4K9-126		
4KA230	4K9-127	4K9-154	
4KA240	4K9-128		
4KA250	4K9-129		

* The compact terminal box and connector of the coil assembly will come assembled and included with the options of the descriptions indicated with model No. selection.

Internal structure and parts list

4KA310

● 2-position single

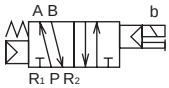

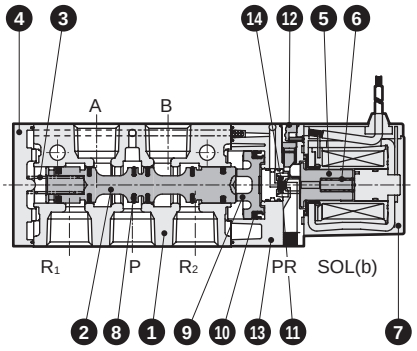

4KA320

● 2-position double



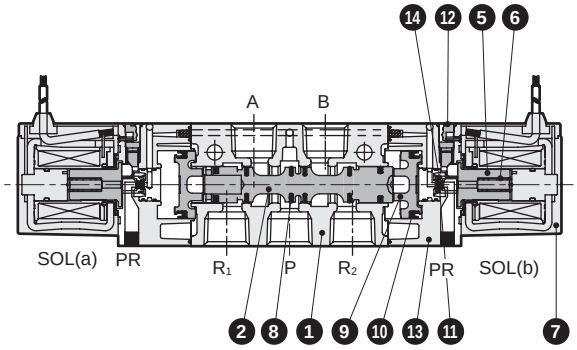

4KA330

● 3-position all ports closed

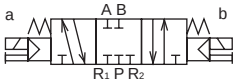

4KA340

● 3-position A/B/R connection

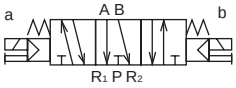

4KA350

● 3-position P/A/B connection

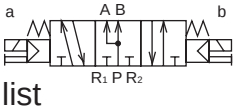

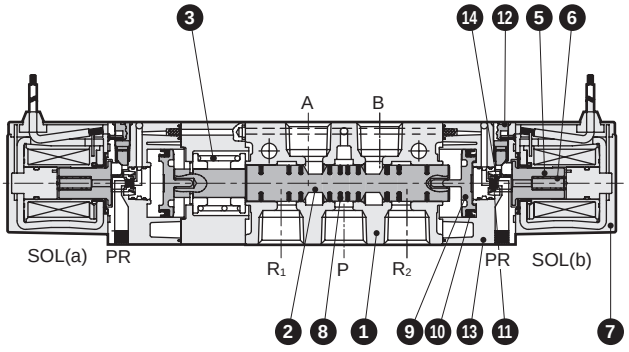

Main parts list

No.	Part name	Material
1	Body	Aluminum alloy die-casting
2	Valving element (spool)	Aluminum
3	Valve spring	Stainless steel
4	Cap	Resin
5	Plunger	-
6	Plunger spring	-
7	Coil assembly	-
8	Spool packing	Nitrile rubber
9	Piston	Resin
10	Piston packing	Nitrile rubber
11	Valve seat	Nitrile rubber
12	Manual button	Resin
13	Pilot valve	Resin
14	Valve seat spring	Stainless steel

Repair parts list

No./part name	2 8	9 10	5 6 7
Model No.	Spool assembly	Piston assembly	Coil assembly *
4KA310	4K9-133	4K9-137	4K3-(E) electrical connection option code- Blank for grommet lead wire COIL -(G) Voltage
4KA320			
4KA330	4K9-134	4K9-138	
4KA340	4K9-135		
4KA350	4K9-136		

* The terminal box and connector of the coil assembly will come assembled and included with the options of the descriptions indicated with model No. selection.

Internal structure and parts list

4KA410

● 2-position single

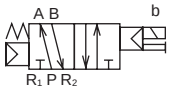

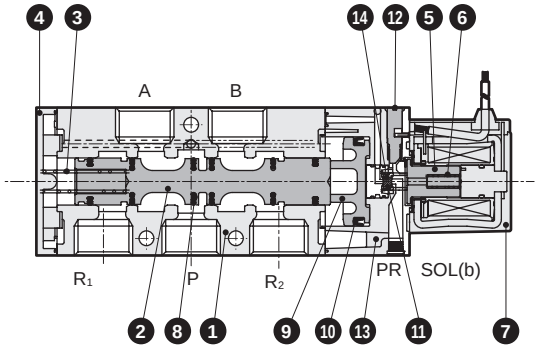

4KA420

● 2-position double



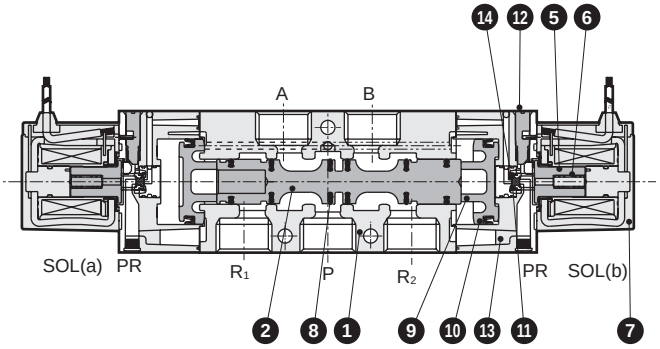

4KA430

● 3-position all ports closed



4KA440

● 3-position A/B/R connection

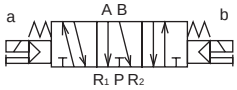

4KA450

● 3-position P/A/B connection

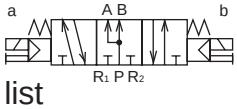

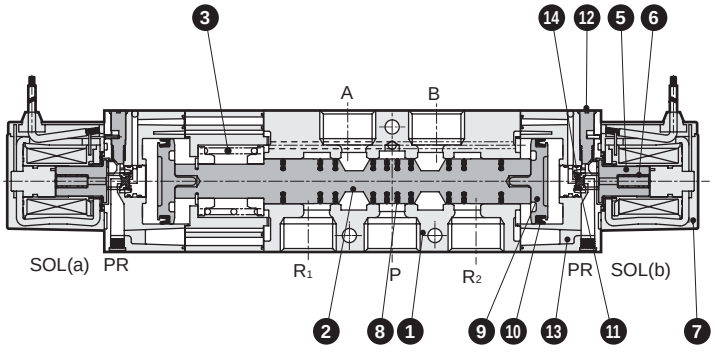

Main parts list

No.	Part name	Material
1	Body	Aluminum alloy die-casting
2	Valving element (spool)	Aluminum
3	Valve spring	Stainless steel
4	Cap	Resin
5	Plunger	-
6	Plunger spring	-
7	Coil assembly	-
8	Spool packing	Nitrile rubber
9	Piston	Resin
10	Piston packing	Nitrile rubber
11	Valve seat	Nitrile rubber
12	Manual button	Resin
13	Pilot valve	Resin
14	Valve seat spring	Stainless steel

Repair parts list

No./part name / Model No.	2 8 Spool assembly	9 10 Piston assembly	5 6 7 Coil assembly *
4KA410	4K9-140	4K9-144	4K3-Ⓔ electrical connection option code Blank for grommet lead wire COIL - Ⓖ Voltage
4KA420			
4KA430	4K9-141	4K9-145	
4KA440	4K9-142		
4KA450	4K9-143		

* The terminal box and connector of the coil assembly will come assembled and included with the options of the descriptions indicated with model No. selection.

Dimensions

3KA110

● 2 position NC single: grommet lead wire

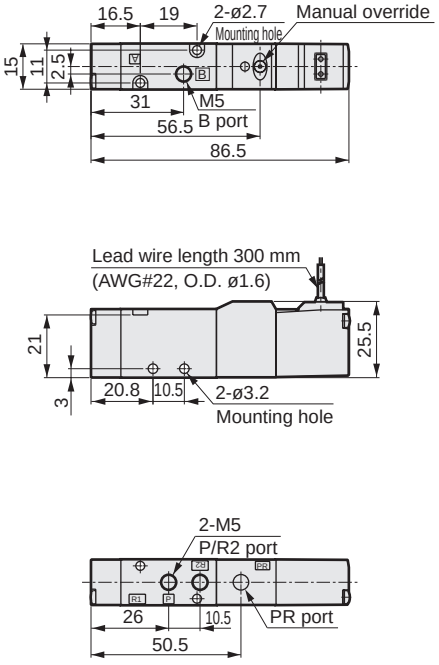

3KA1110

● 2 position NO single: grommet lead wire

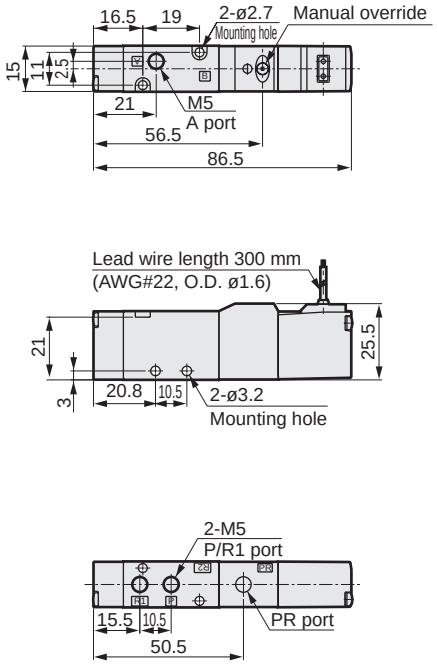

● Mounting plate: (P [2-position single only])

Material: Steel

Zinc chromate treatment

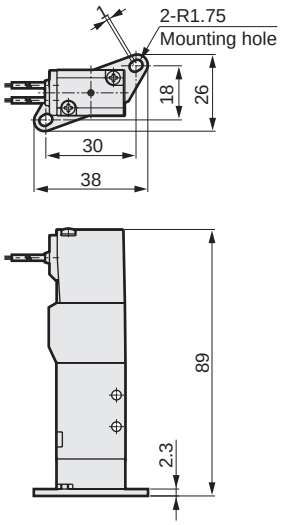

3KA120

● 2 position NC double: grommet lead wire

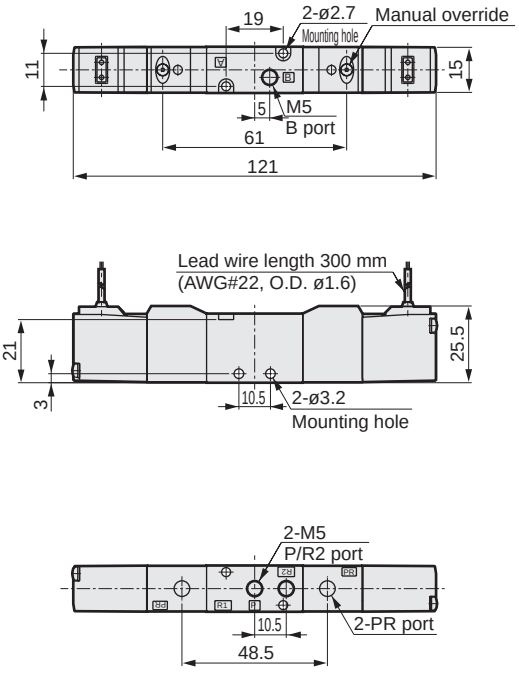

Dimensions

● ø4/ø6 push-in fitting: (GS4*/GS6*)

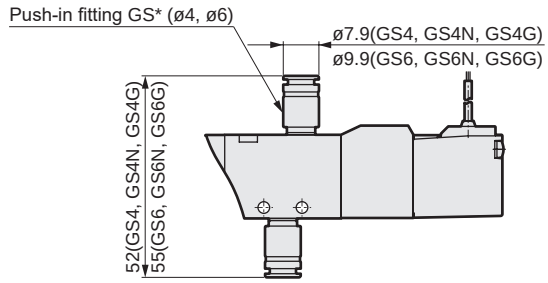

● Compact terminal box: (B [Without lamp]/L/LS [With lamp])

Without indicator lamp

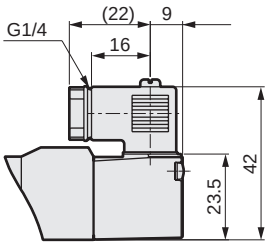

With indicator lamp

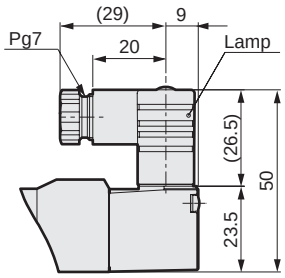

● C-connector: (C/C1/C0*/C2/C2*/C3)

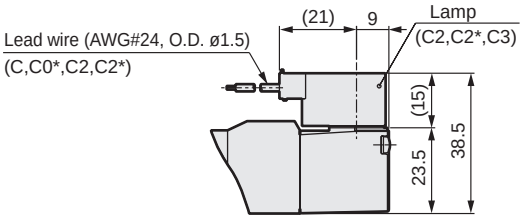

● D-connector: (D/D1/D0*/D2/D2*/D3)

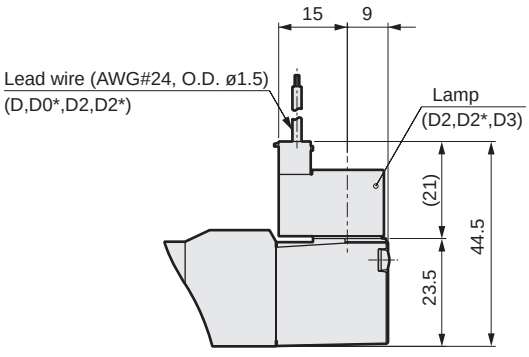

Dimensions

4KA110

● 2-position single: grommet lead wire

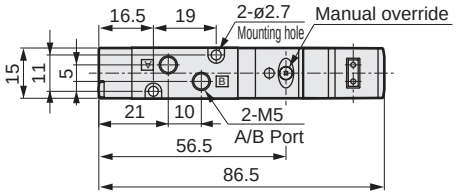

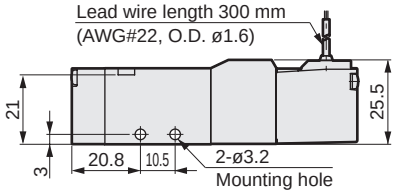

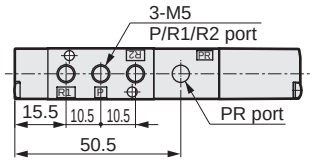

● Mounting plate: (P [2-position single only])

Material: Steel

Zinc chromate treatment

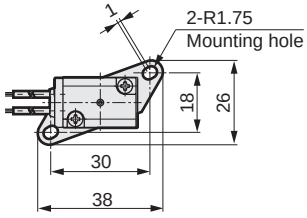

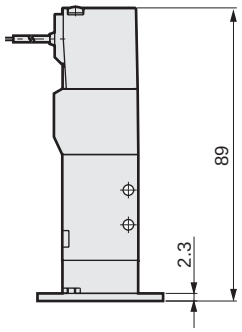

4KA120

● 2-position double: grommet lead wire

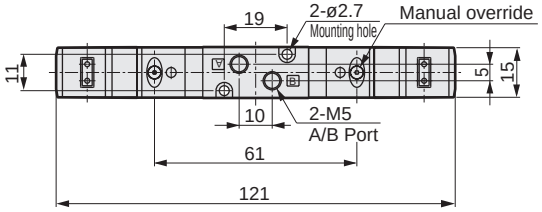

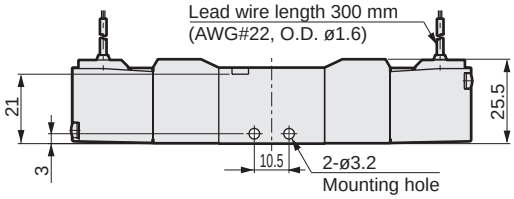

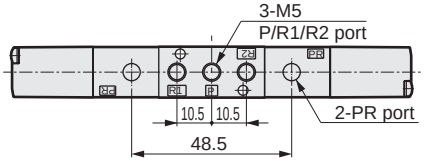

4KA1$^{3}_{5}$40

● 3-position: grommet lead wire

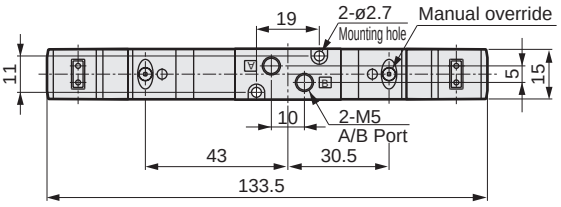

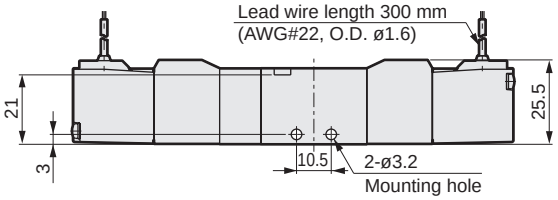

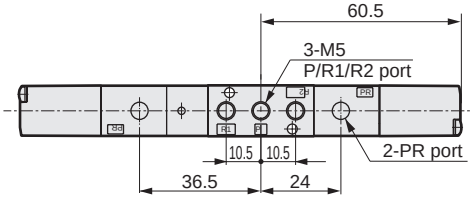

Dimensions

● ø4/ø6 push-in fitting: (GS4*/GS6*)

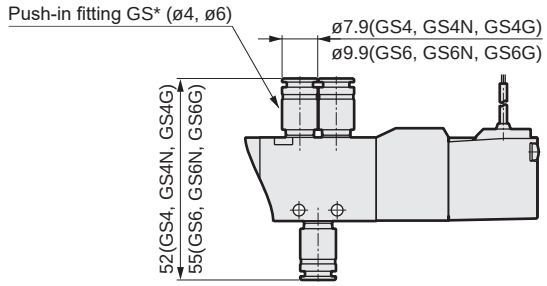

● Compact terminal box: (B [Without lamp]/L/LS [With lamp])

Without indicator lamp

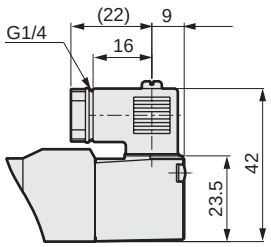

With indicator lamp

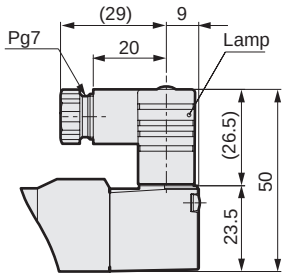

● C-connector: (C/C1/C0*/C2/C2*/C3)

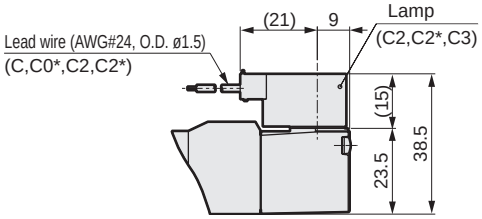

● D-connector: (D/D1/D0*/D2/D2*/D3)

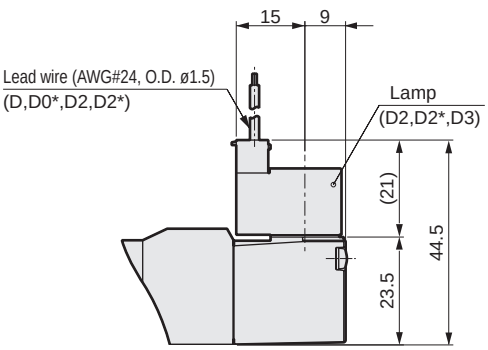

Dimensions

4KA210 CAD

● 2-position single: grommet lead wire

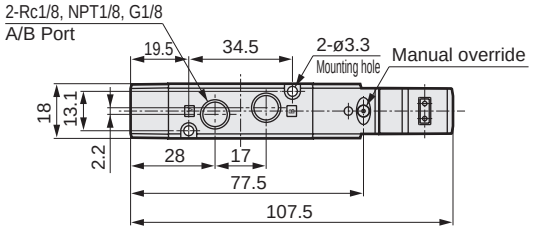

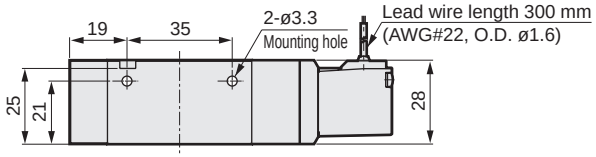

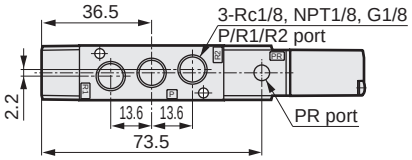

● Mounting plate: (P [2-position single only])

Material: Steel

Zinc chromate treatment

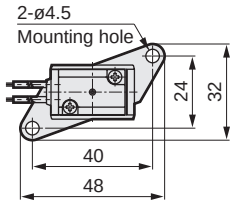

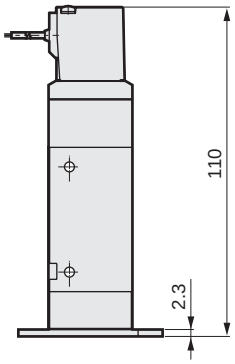

4KA220 CAD

● 2-position double: grommet lead wire

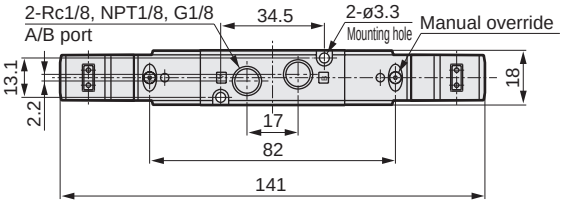

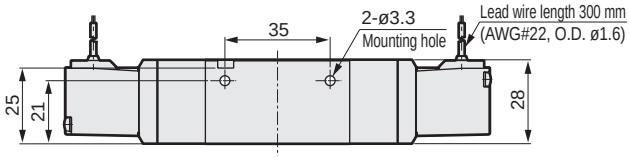

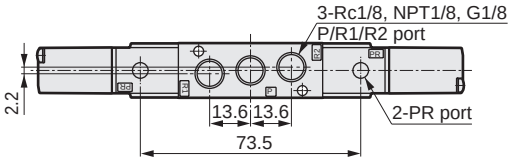

4KA2$^{3}_{5}$40 CAD

● 3-position: grommet lead wire

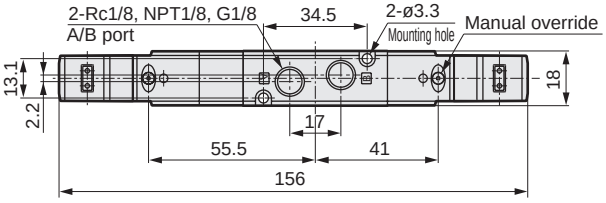

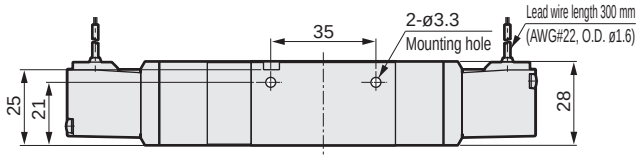

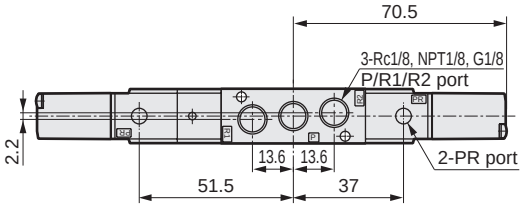

Dimensions

● ø6/ø8 push-in fitting: (GS6*/GS8*)

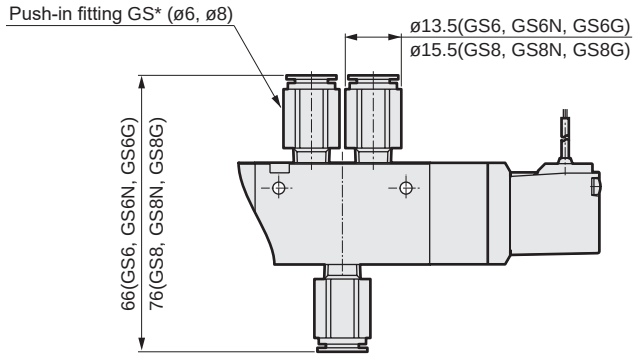

● Compact terminal box: (B [Without lamp]/L/LS [With lamp])

Without indicator lamp

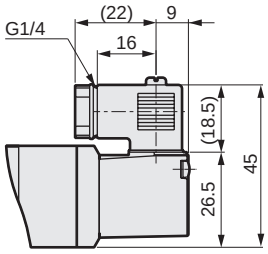

With indicator lamp

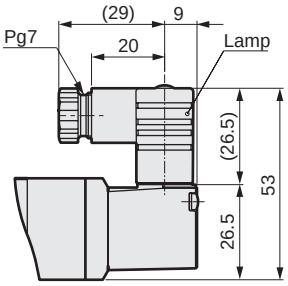

● C-connector: (C/C1/C0*/C2/C2*/C3)

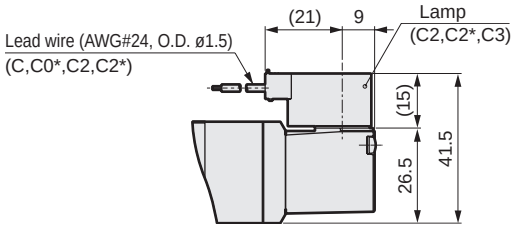

● D-connector: (D/D1/D0*/D2/D2*/D3)

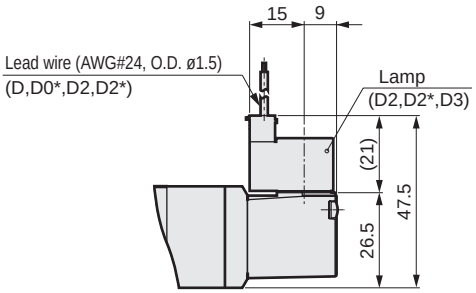

Dimensions

4KA310 CAD

● 2-position single: grommet lead wire

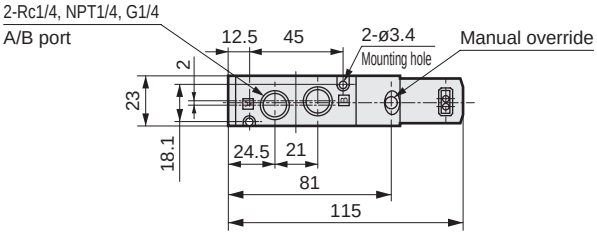

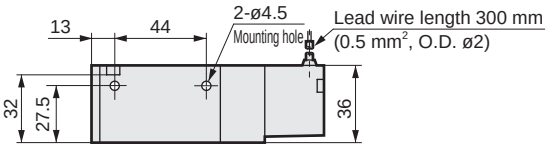

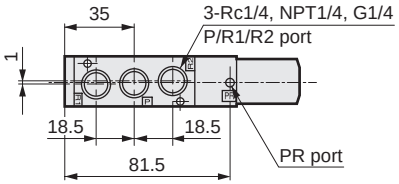

● Mounting plate: (P [2-position single only])

Material: Steel

Zinc chromate treatment

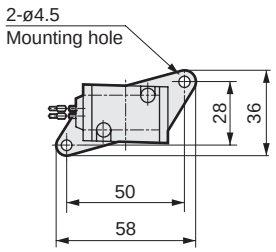

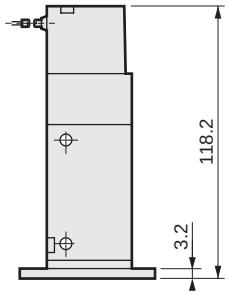

4KA320 CAD

● 2-position double: grommet lead wire

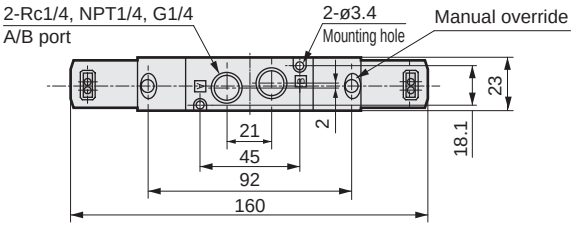

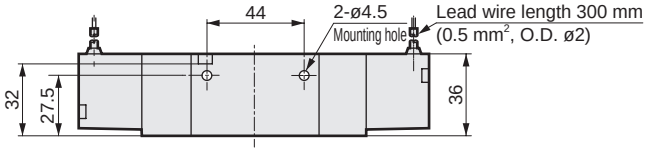

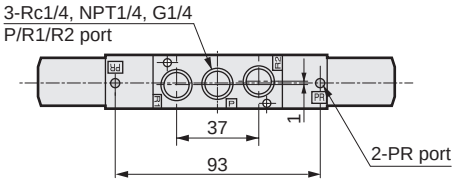

4KA3$^{3}_{4}$0$_{5}$ CAD

● 3-position: grommet lead wire

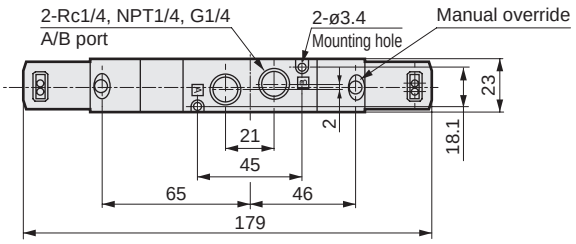

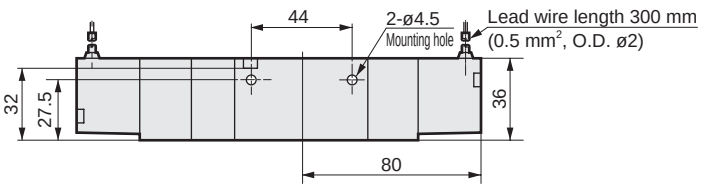

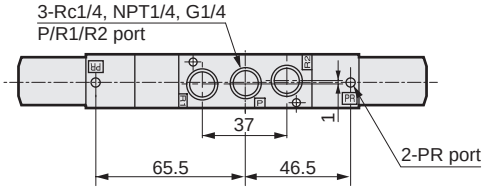

Dimensions

● ø8/ø10 push-in fitting: (GS8*/GS10*)

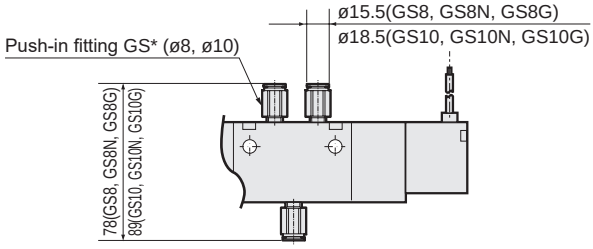

● Terminal box: (B/L/LS)

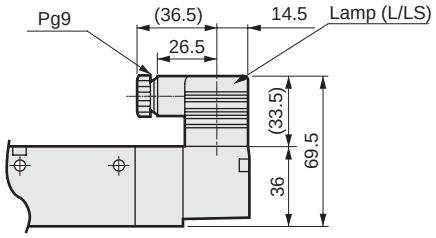

● C-connector: (C/C1/C0*/C2/C2*/C3)

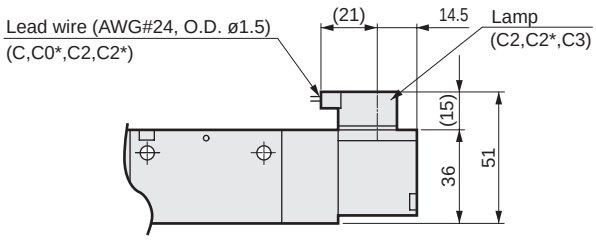

● D-connector: (D/D1/D0*/D2/D2*/D3)

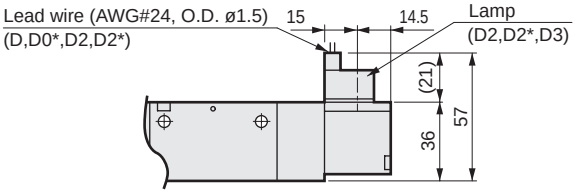

Dimensions

4KA410 CAD

● 2-position single: grommet lead wire

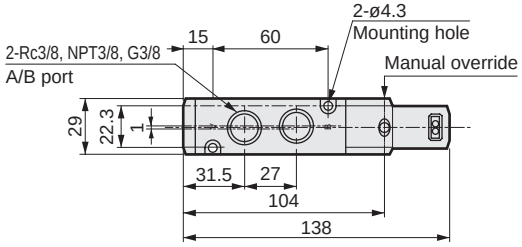

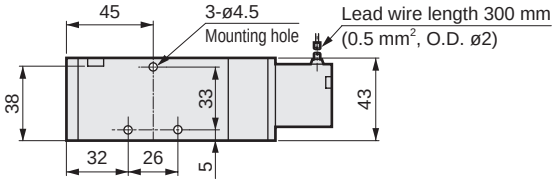

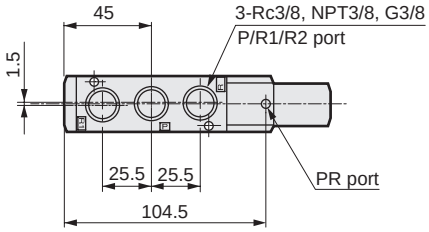

● Mounting plate: (P [2-position single only])

Material: Steel

Zinc chromate treatment

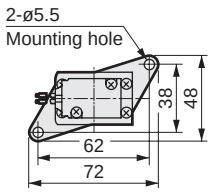

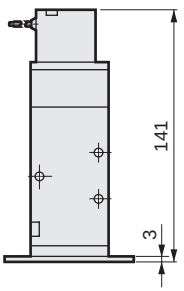

4KA420 CAD

● 2-position double: grommet lead wire

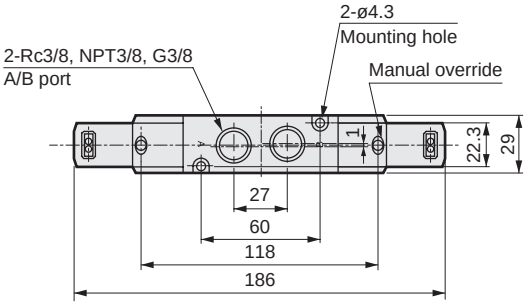

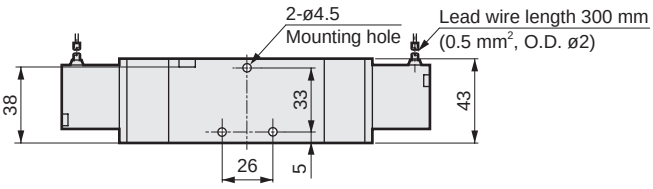

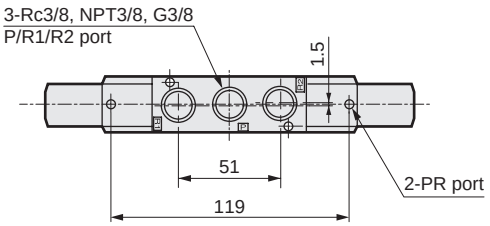

4KA4$^{3}_{5}$40 CAD

● 3-position: grommet lead wire

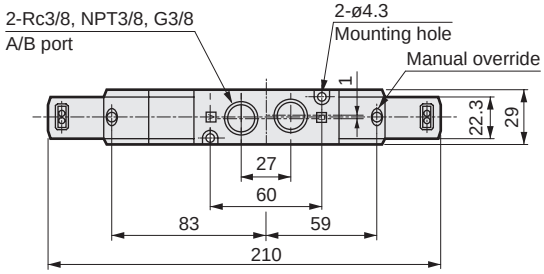

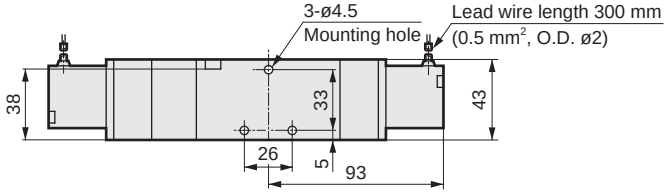

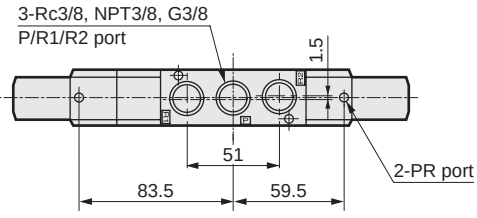

Dimensions

● With ø10/ø12 push-in fitting: (GS10*/GS12*)

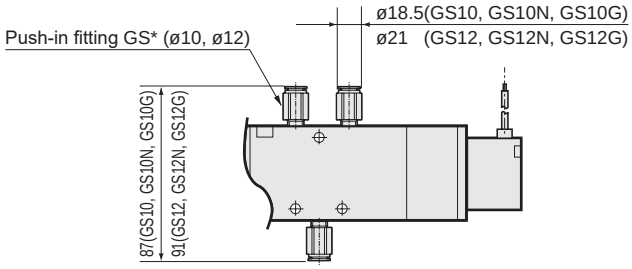

● Terminal box: (B/L/LS)

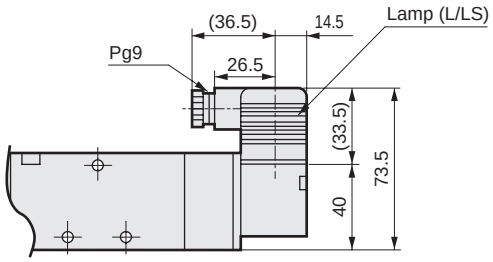

● C-connector: (C/C1/C0*/C2/C2*/C3)

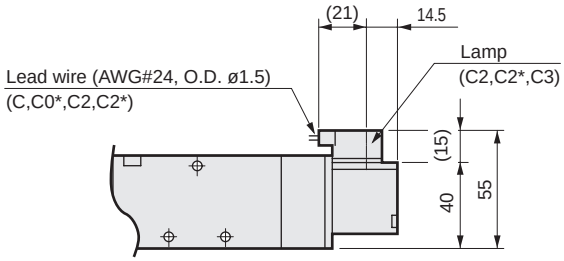

● D-connector: (D/D1/D0*/D2/D2*/D3)

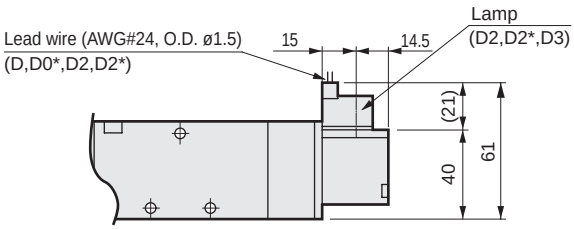



Discrete valve sub-plate piping
Pilot operated 5-port pneumatic valve

4KB1/2/3/4 Series

● Cylinder bore size: ø20 to ø160

CE Refer to the Ending for details. RoHS CAD

JIS symbol

● 5-port valve
2-position single

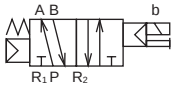

● 5-port valve
2-position double



● 5-port valve
3-position all ports closed

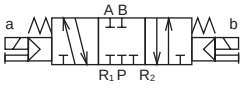

● 5-port valve
3-position A/B/R connection

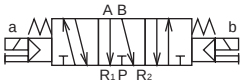

● 5-port valve
3-position P/A/B connection



● External pilot

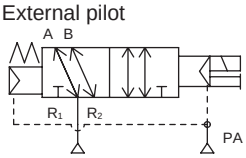

(2-position single)

Common specifications

Item	Description
Valve and operation	Pilot operated soft spool valve
Working fluid	Compressed air
Max. working press MPa	0.70 (≈100 psi, 7 bar)
Min. working press MPa	Refer to Individual specifications listed below
Proof pressure MPa	1.05 (≈150 psi, 10.5 bar)
Ambient temperature °C	-5 (23°F) to 50 (122°F) (no freezing)
Fluid temperature °C	5 (41°F) to 50 (122°F)
Lubrication	Not required
Degree of protection	Dust-proof
Vibration resistance m/s²	50 or less
Shock resistance m/s²	300 or less
Atmosphere	Cannot be used in corrosive gas environment.

*1: The working pressure when the external pilot (option code: K) has been selected is 0 to 0.7 MPa.
In addition, use the pilot with a pressure of 0.2 to 0.7 MPa.

Electrical specifications

Item			4KB1/2	4KB3/4
Rated voltage V	AC		100,200 (50 / 60 Hz)	
	DC		24	
Voltage fluctuation range			±10%	
Starting current A	AC	100 V	0.056/0.044	0.046/0.042
	AC	200 V	0.028/0.022	0.023/0.021
Holding current A	AC	100 V	0.028/0.022	0.023/0.021
	AC	200 V	0.014/0.011	
	DC	24 V	0.075	
Power consumption W ( ): With indicator	AC	100 V	1.8 / 1.4 (1.8 / 1.5)	1.6 / 1.3 (1.8 / 1.5)
	AC	200 V	1.8 / 1.4 (1.8 / 1.5)	1.6 / 1.3 (1.8 / 1.5)
	DC	24 V	1.8(2.0)	
Thermal class			B (molded coil)	
Temperature rise °C			43	30

Reference: 100 VAC 50/60 Hz can be used with a rated voltage of 110 VAC 60 Hz and 200 VAC 50/60 Hz can be used with 220 VAC 60 Hz.

Individual specifications

1 MPa ≈ 145.0 psi, 1 MPa = 10 bar

Item			4KB1	4KB2	4KB3	4KB4
Min. working pressure MPa	2-position	Single	0.15	0.15	0.15	0.15
		Double		0.10	0.10	0.10
	3-position		0.20	0.20	0.20	0.20
Port size	P/A/B port		Rc1/8 NPT1/8 G1/8	Rc1/8, Rc1/4 NPT1/8, NPT1/4 G1/8, G1/4	Rc1/4, Rc3/8 NPT1/4, NPT3/8 G1/4, G3/8	Rc3/8, Rc1/2 NPT3/8, NPT1/2 G3/8, G1/2
	R1/R2 port		Rc1/8 NPT1/8 G1/8	Rc1/8, Rc1/4 NPT1/8, NPT1/4 G1/8, G1/4	Rc1/4, Rc3/8 NPT1/4, NPT3/8 G1/4, G3/8	Rc3/8, Rc1/2 NPT3/8, NPT1/2 G3/8, G1/2

Performance/characteristics by model

Item		4KB1	4KB2	4KB3	4KB4
Response time *1 ms	2-position	30 or less	30 or less	30 or less	30 or less
	3-position	60 or less	60 or less	60 or less	60 or less

*1: The response time is the value at 0.5 MPa working pressure, with no lubrication, and with the power ON. It depends on the pressure and the lubricant quality.

Weight

Item			4KB1	4KB2	4KB3	4KB4
Weight g	2-position	Single	104	200	353	579
		Double	144	240	454	689
	3-position		154	255	493	759

Flow characteristics

Model No.	Solenoid position		C[dm³/(s·bar)]	b
4KB1	2-position		0.89	0.44
	3-position	All ports closed	0.63	0.50
		A/B/R connection	1.2	0.29
		P/A/B connection	0.75	0.39
4KB2	2-position		2.7	0.24
	3-position	All ports closed	2.4	0.29
		A/B/R connection	3.0	0.27
		P/A/B connection	2.4	0.34
4KB3	2-position		6.3	0.26
	3-position	All ports closed	5.6	0.27
		A/B/R connection	6.6	0.20
		P/A/B connection	5.9	0.27
4KB4	2-position		12	0.24
	3-position	All ports closed	11	0.27
		A/B/R connection	13	0.21
		P/A/B connection	10	0.22

*1: Effective cross-sectional area S and sonic conductance C are converted as S ≈ 5.0 × C.

Ozone-proof specifications

(Ending Page 5)

** - Voltage - **P11**

Copper and PTFE free specifications

● Copper- and PTFE-based materials are not used in the flow path.

** - Voltage - **P6**

CE marking specifications

** - Voltage - **ST**

• Standard voltage of 24 VDC or less is CE marking-compatible even if the model No. is not indicated with "ST".

4KB1 to 4 Series

Discrete valve; sub-plate piping

How to order

4KB2 1 0 - 06 - M1 B ( ) - AC100V

● Single solenoid valve for manifold

4KB1 1 9 - 00 - M1 B ( ) - AC100V * Gasket/mounting screw included

Ⓐ Model No.
Ⓑ Solenoid position
Ⓒ Port size
Ⓓ Manual override
Ⓔ Electrical connections
*Refer to page 1263 for the circuit diagram with surge suppressor/lamp.
Ⓕ Other options
Ⓖ Voltage

	Code	Description	Ⓐ Model No. 4KB1	4KB2	4KB3	4KB4
Ⓑ Solenoid position	1	2-position single	●	●	●	●
	2	2-position double	●	●	●	●
	3	3-position all ports closed	●	●	●	●
	4	3-position A/B/R connection	●	●	●	●
	5	3-position P/A/B connection	●	●	●	●
Ⓒ Port size	Port	Port P/A/B	Port R1/R2 (1) = Rc1/8 (2) = Rc1/4 (3) = Rc3/8 (4) = Rc1/2			
	06	Rc1/8	(1)	(2)		
	08	Rc1/4		(2)	(2)	
	10	Rc3/8			(3)	(3)
	15	Rc1/2				(4)
	Port	Port P/A/B	Port R1/R2 (5) = NPT1/8 (6) = NPT1/4 (7) = NPT3/8 (8) = NPT1/2			
	06N	NPT1/8	(5)	(6)		
	08N	NPT1/4		(6)	(6)	
	10N	NPT3/8			(7)	(7)
	15N	NPT1/2				(8)
	Port	Port P/A/B	Port R1/R2 (9) = G1/8 (10) = G1/4 (11) = G3/8 (12) = G1/2			
	06G	G1/8	(9)	(10)		
	08G	G1/4		(10)	(10)	
	10G	G3/8			(11)	(11)
	15G	G1/2				(12)
Ⓓ	Blank	Non-locking manual override	●	●	●	●
	M1	Locking manual override	●	●	●	●
Ⓔ		Refer to the electrical connections list on the next page.				
Ⓕ	Blank	No option	●	●	●	●
	K	External pilot (*2)	●	●	●	●
	S	Surge suppressor included (*3) (*4)	●	●	●	●
	-A	Coolant supported (packing: FKM)	●	●	●	●
Ⓖ Voltage	AC100V	100 VAC 50/60 Hz (Standard)	●	●	●	●
	AC200V	200 VAC 50/60 Hz (Standard)	●	●	●	●
	DC24V	24 VDC (Standard)	●	●	●	●
	DC12V	12 VDC (Option)	●	●	●	●
	AC110V	110 VAC 50/60 Hz (Option)	●	●	●	●
	AC220V	220 VAC 50/60 Hz (Option)	●	●	●	●
* Other made-to-order products						
	AC24V		●	●	●	●
	AC115V		●	●	●	●
	AC120V		●	●	●	●

[Table 1] Compact terminal box L/LS compatibility table

Code	Description			4KB1	4KB2	4KB3	4KB4	Surge suppressor
L	Without lead wire	With indicator lamp	AC	●	●	●	●	
			DC			●	●	
		With surge suppressor and indicator lamp	AC					
			DC	●	●			Integrated
LS	Without lead wire	With surge suppressor and indicator lamp	AC	●	●	●	●	Integrated
			DC			●	●	Integrated

⚠ Precautions for model No. selection

*1 : The DC voltage models of the compact terminal box "L" of 4KB1, 4KB2 are equipped with a surge suppressor.
*2 : Consult with CKD when using a vacuum with the external pilot (K).
*3: The surge suppressor for attachment is a suppression connector when the grommet lead wire is 24 VDC or less. (Refer to page 1262.)
*4 : The surge suppressor can only be selected when the grommet lead wire or compact terminal box "B" has been selected for the electrical connections.

[Example of model No.]

4KB210-06-M1BK-AC100V

Ⓐ Model : 4KB2
Ⓑ Solenoid position : 2-position single
Ⓒ Port size : Rc1/8
Ⓓ Manual override : Locking manual override
Ⓔ Electrical connections : Compact terminal box/ without lead wire
Ⓕ Other options : External pilot
Ⓖ Voltage : 100 VAC 50/60 Hz

[Electrical connections list]

Ⓔ Electrical connections	Code	Description	Ⓐ Model No. 4KB1	4KB2	4KB3	4KB4
	Grommet lead wire					
	Blank	Grommet lead wire (300 mm)	●	●	●	●
	Compact terminal box					
	B	Without lead wire	●	●	●	●
	L	Without lead wire	Refer to [Table 1] on the previous page for details (*1)			
	LS	Without lead wire, with surge suppressor/lamp				
	C-connector (lead wire lateral direction)					
	C	Lead wire length (300 mm)	●	●	●	●
	C00	Lead wire length (500 mm)	●	●	●	●
	C01	Lead wire length (1000 mm)	●	●	●	●
	C02	Lead wire length (2000 mm)	●	●	●	●
	C03	Lead wire length (3000 mm)	●	●	●	●
	C1	Without lead wire	●	●	●	●
	C2	Lead wire length (300 mm) with surge suppressor/lamp	●	●	●	●
	C20	Lead wire length (500 mm) with surge suppressor/lamp	●	●	●	●
	C21	Lead wire length (1000 mm) with surge suppressor/lamp	●	●	●	●
	C22	Lead wire length (2000 mm) with surge suppressor/lamp	●	●	●	●
	C23	Lead wire length (3000 mm) with surge suppressor/lamp	●	●	●	●
	C3	Without lead wire, with surge suppressor/lamp	●	●	●	●
	D-connector (lead wire upward direction)					
	D	Lead wire length (300 mm)	●	●	●	●
	D00	Lead wire length (500 mm)	●	●	●	●
	D01	Lead wire length (1000 mm)	●	●	●	●
	D02	Lead wire length (2000 mm)	●	●	●	●
	D03	Lead wire length (3000 mm)	●	●	●	●
	D1	Without lead wire	●	●	●	●
	D2	Lead wire length (300 mm) with surge suppressor/lamp	●	●	●	●
	D20	Lead wire length (500 mm) with surge suppressor/lamp	●	●	●	●
	D21	Lead wire length (1000 mm) with surge suppressor/lamp	●	●	●	●
	D22	Lead wire length (2000 mm) with surge suppressor/lamp	●	●	●	●
	D23	Lead wire length (3000 mm) with surge suppressor/lamp	●	●	●	●
	D3	Without lead wire, with surge suppressor/lamp	●	●	●	●

Internal structure and parts list

4KB110

● 2-position single

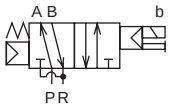

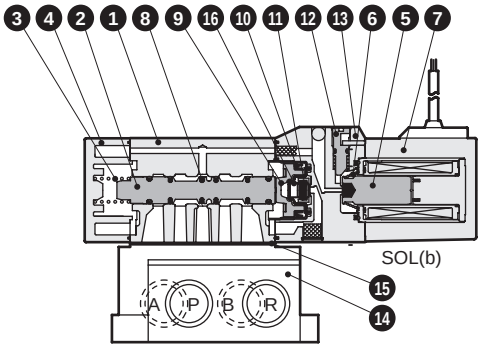

4KB120

● 2-position double

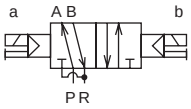

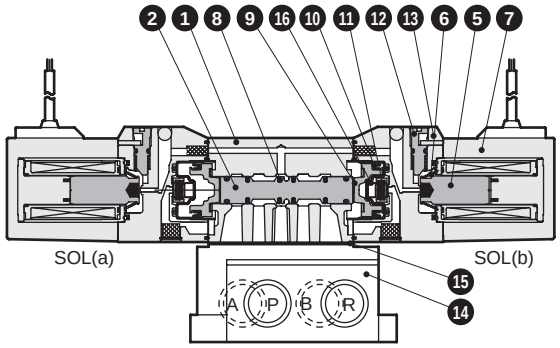

4KB130

● 3-position all ports closed

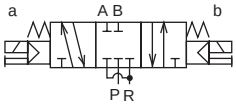

4KB140

● 3-position A/B/R connection

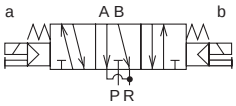

4KB150

● 3-position P/A/B connection

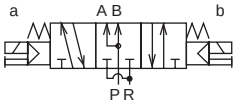

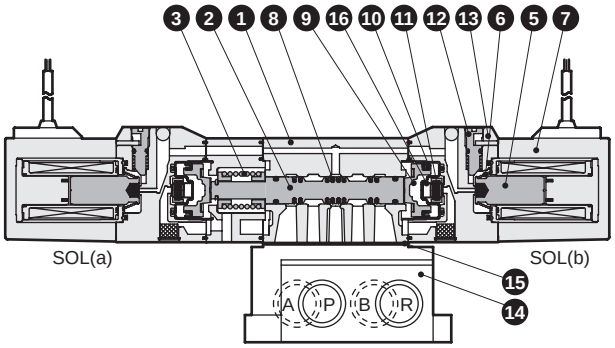

Main parts list

No.	Part name		Material
1	Body		Aluminum alloy die-casting
2	Valving element (spool)		Aluminum
3	Valve spring		Stainless steel
4	Cap		Resin
5	Plunger		-
6	Plunger spring		-
7	Coil assembly		-
8	Spool packing		Nitrile rubber
9	Piston		Resin
10	Piston packing		Nitrile rubber
11	Valve seat		Nitrile rubber
12	Manual button		Resin
13	Pilot valve		Resin
14	Sub-plate		Aluminum alloy die-casting
15	Gasket	*2	Nitrile rubber
16	Valve seat spring		Stainless steel

Main parts list

No.	Component name	Model No.
14 15	Sub-plate kit	4KB110- Ⓑ Port size - Ⓕ Exterior Pilot -SUB-BASE-KIT

* Mounting screws are attached to the sub-plate kit.

Repair parts list

No./part name	2 8	9 10	5 6 7
Model No.	Spool assembly	Piston assembly	Coil assembly *
4KB110	4K9-110	4K9-151	4K1L- Ⓔ electrical connection option code - Blank for grommet lead wire
4KB120	4K9-118		
4KB130	4K9-111	4K9-152	
4KB140	4K9-112		COIL - Ⓖ Voltage
4KB150	4K9-113		

*1: The compact terminal box and connector of the coil assembly will come assembled and attached with the options of the descriptions indicated with model No. selection.

*2: Take care, as gasket ⑮ mounting has an orientation.

Internal structure and parts list

4KB210

● 2-position single

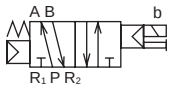

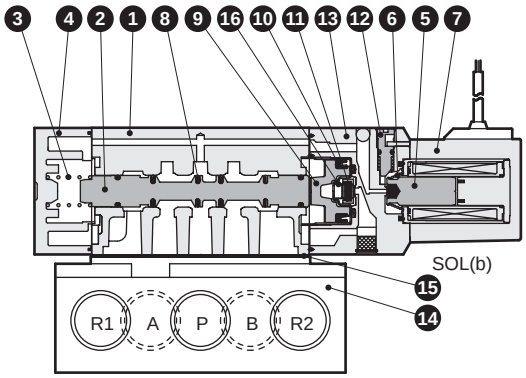

4KB220

● 2-position double

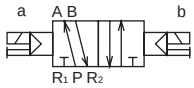

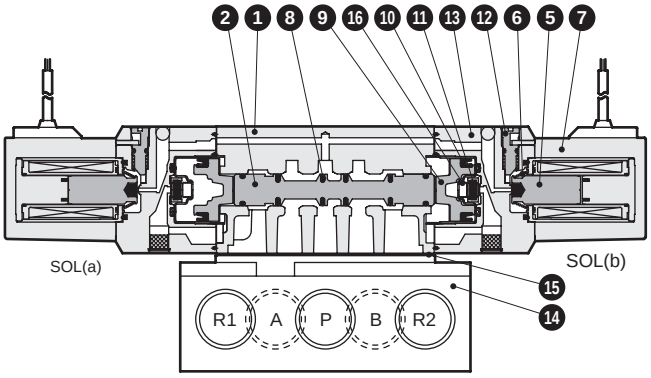

4KB230

● 3-position all ports closed

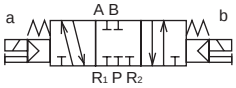

4KB240

● 3-position A/B/R connection

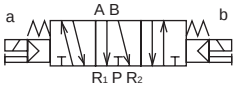

4KB250

● 3-position P/A/B connection



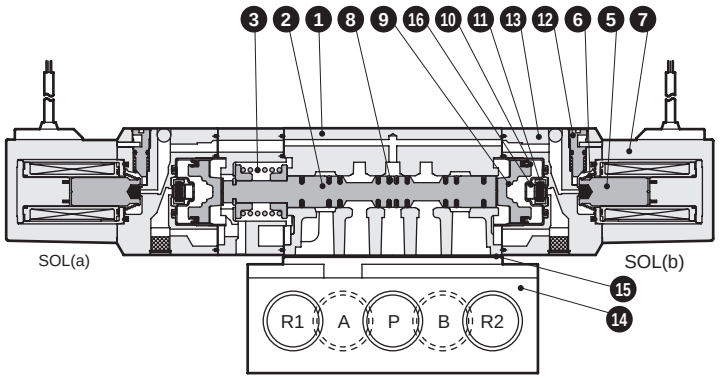

Main parts list

No.	Part name	Material
1	Body	Aluminum alloy die-casting
2	Valving element (spool)	Aluminum
3	Valve spring	Stainless steel
4	Cap	Resin
5	Plunger	-
6	Plunger spring	-
7	Coil assembly	-
8	Spool packing	Nitrile rubber
9	Piston	Resin
10	Piston packing	Nitrile rubber
11	Valve seat	Nitrile rubber
12	Manual button	Resin
13	Pilot valve	Resin
14	Sub-plate	Aluminum alloy die-casting
15	Gasket	Nitrile rubber
16	Valve seat spring	Stainless steel

Main parts list

No.	Component name	Model No.
14 15	Sub-plate kit	4KB210- (B) Port size - (F) Exterior Pilot -SUB-BASE-KIT

* Mounting screws are attached to the sub-plate kit.

Repair parts list

No./part name	2 8	9 10	5 6 7
Model No.	Spool assembly	Piston assembly	Coil assembly *
4KB210	4K9-150	4K9-153	4K1L- (E) electrical connection option code - Blank for grommet lead wire
4KB220	4K9-126		
4KB230	4K9-127	4K9-154	
4KB240	4K9-128		COIL - (G) Voltage
4KB250	4K9-129		

*1: The compact terminal box and connector of the coil assembly will come assembled and attached with the options of the descriptions indicated with model No. selection.

Internal structure and parts list

4KB310

● 2-position single



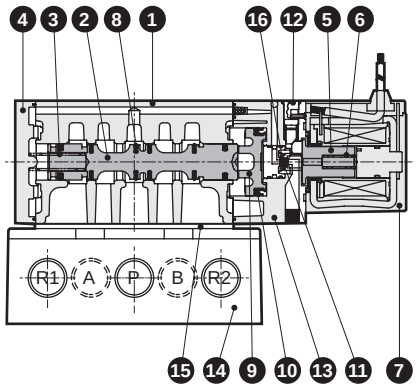

4KB320

● 2-position double

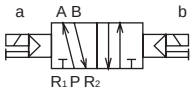

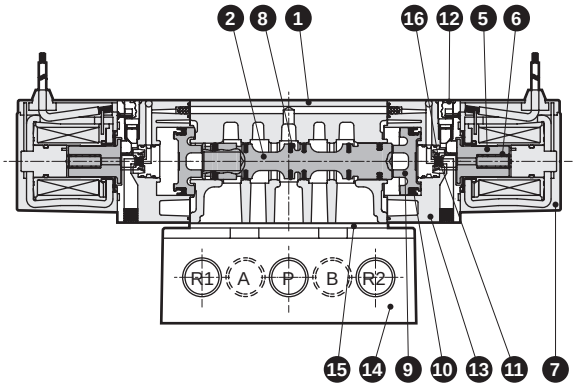

4KB330

● 3-position all ports closed

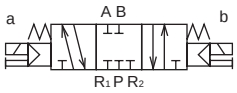

4KB340

● 3-position A/B/R connection



4KB350

● 3-position P/A/B connection



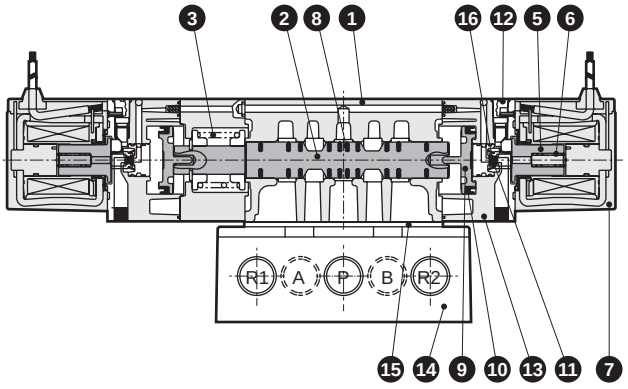

Main parts list

No.	Part name	Material
1	Body	Aluminum alloy die-casting
2	Valving element (spool)	Aluminum
3	Valve spring	Stainless steel
4	Cap	Resin
5	Plunger	-
6	Plunger spring	-
7	Coil assembly	-
8	Spool packing	Nitrile rubber
9	Piston	Resin
10	Piston packing	Nitrile rubber
11	Valve seat	Nitrile rubber
12	Manual button	Resin
13	Pilot valve	Resin
14	Sub-plate	Aluminum alloy die-casting
15	Gasket *2	Nitrile rubber
16	Valve seat spring	Stainless steel

Main parts list

No.	Component name	Model No.
14 15	Sub-plate kit	4KB310- (B) Port size - (F) External pilot -SUB-BASE-KIT

* Mounting screws are attached to the sub-plate kit.

Repair parts list

No./part name	2 8	9 10	5 6 7
Model No.	Spool assembly	Piston assembly	Coil assembly *1
4KB310	4K9-133	4K9-137	4K3- (E) electrical connection option code - Blank for grommet lead wire COIL - (G) Voltage
4KB320			
4KB330	4K9-134	4K9-138	
4KB340	4K9-135		
4KB350	4K9-136		

* 1: The terminal box and connector of the coil assembly will come assembled and included with the options of the descriptions indicated with model No. selection.
* 2: Take care, as gasket (15) mounting has an orientation.

Internal structure and parts list

4KB410

● 2-position single

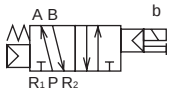

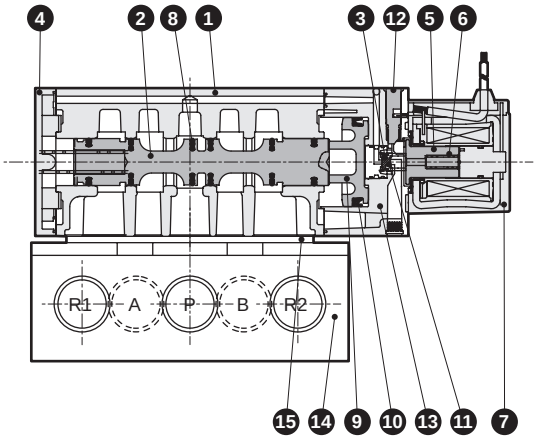

4KB420

● 2-position double



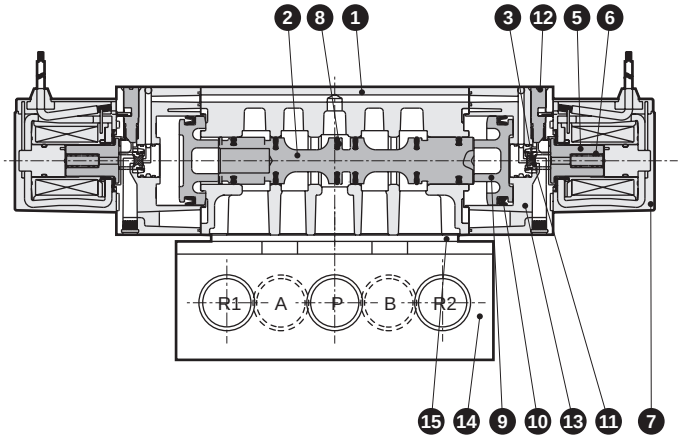

4KB430

● 3-position all ports closed

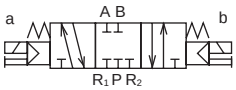

4KB440

● 3-position A/B/R connection



4KB450

● 3-position P/A/B connection



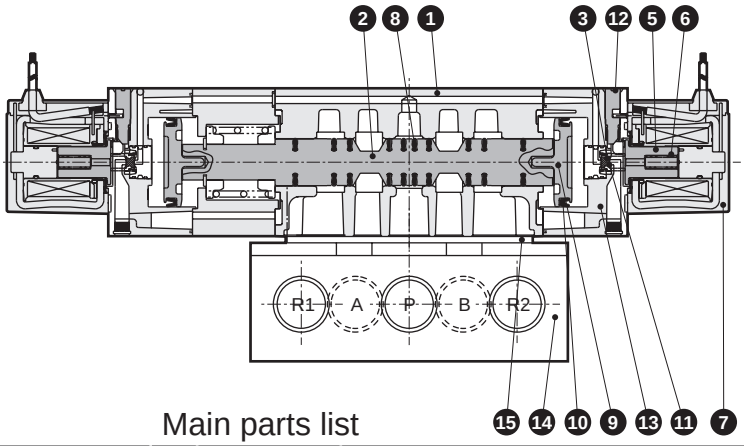

Main parts list

No.	Part name	Material
1	Body	Aluminum alloy die-casting
2	Valving element (spool)	Aluminum
3	Valve spring	Stainless steel
4	Cap	Resin
5	Plunger	-
6	Plunger spring	-
7	Coil assembly	-
8	Spool packing	Nitrile rubber
9	Piston	Resin
10	Piston packing	Nitrile rubber
11	Valve seat	Nitrile rubber
12	Manual button	Resin
13	Pilot valve	Resin
14	Sub-plate	Aluminum alloy die-casting
15	Gasket	Nitrile rubber
16	Valve seat spring	Stainless steel

Main parts list

No.	Component name	Model No.
14 15	Sub-plate kit	4KB410- Ⓑ Port size - Ⓕ External pilot -SUB-BASE-KIT

* Mounting screws are attached to the sub-plate kit.

Repair parts list

No./part name	2 8	9 10	5 6 7
Model No.	Spool assembly	Piston assembly	Coil assembly *
4KB410	4K9-140	4K9-144	4K3- Ⓔ electrical connection option code - (Blank for grommet lead wire)
4KB420			
4KB430	4K9-141	4K9-145	COIL - Ⓖ Voltage
4KB440	4K9-142		
4KB450	4K9-143		

* 1: The plunger assembly is attached with the coil assembly. As there are limitations with the combinations of coils and plungers, do not replace these.
* 2: The terminal box and connector of the coil assembly will come assembled and included with the options of the descriptions indicated with model No. selection.
* 3: When combining a coil assembly into a valve, contact CKD for precautions regarding the work.

4GA/B
M4GA/B
MN4GA/B
4GA/B (master)
4GB With sensor
4GD/E
M4GD/E
MN4GD/E
4GA4/B4
MN3E MN4E
W4GA/B2
W4GB4
MN3S0 MN4S0
4SA/B0
4KA/B
4KA/B (master)
4F
4F (master)
PV5G GMF
PV5 GMF
PV5S-0
3Q
MV3QR
3MA/B0
3PA/B
P/M/B
NP/NAP NVP
4G*0EJ
4F*0EX
4F*0E
HMV HSV
2QV 3QV
SKH
Silencer
TotAirSys (Total Air)
TotAirSys (Gamma)
Ending

Dimensions

4KB110

● 2-position single: grommet lead wire

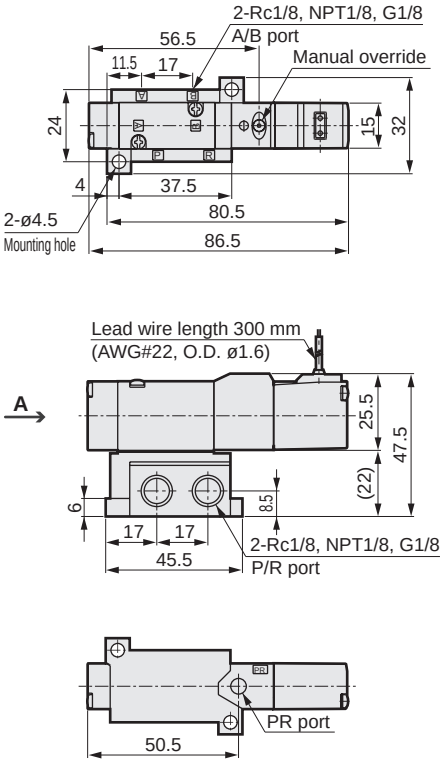

4KB120

● 2-position double: grommet lead wire

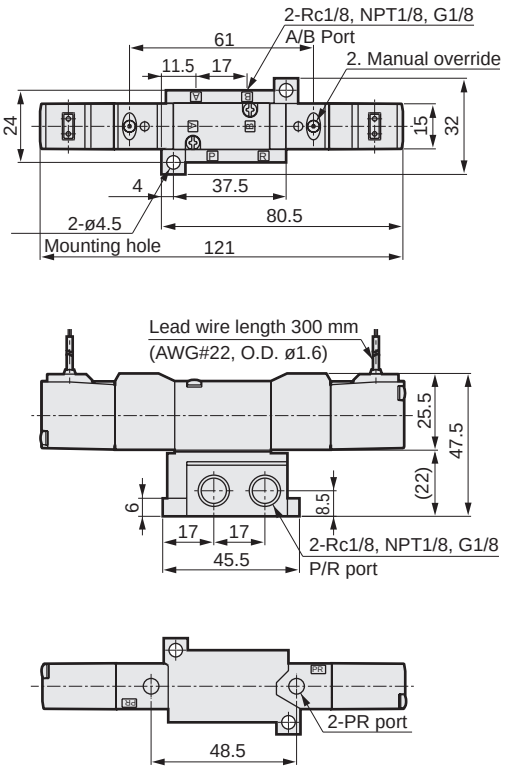

4KB1 3 4 5 0

● 3-position: grommet lead wire

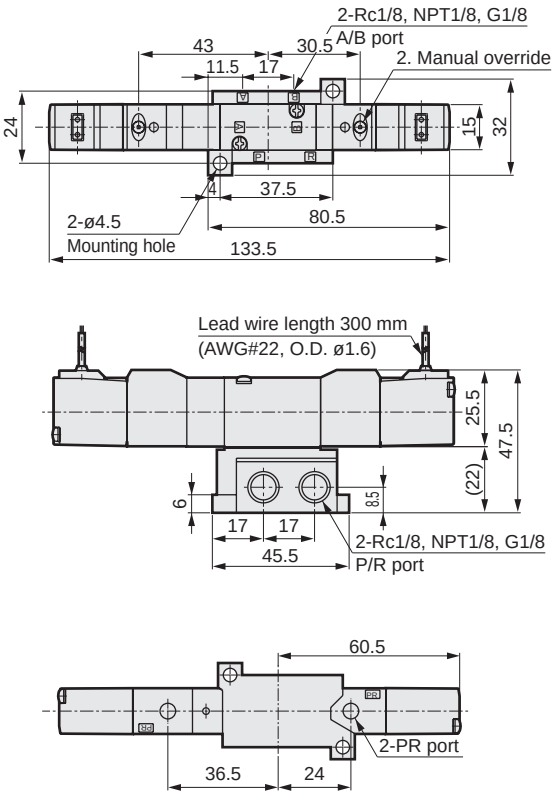

Dimensions

● Compact terminal box: (B [Without lamp]/L/LS [With lamp])

Without indicator lamp

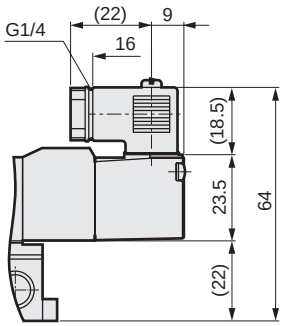

With indicator lamp

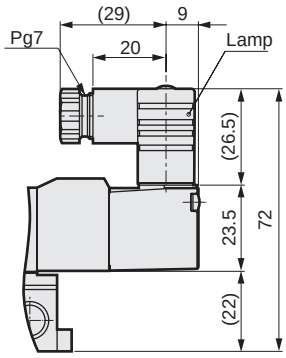

● C-connector: (C/C1/C0*/C2/C2*/C3)

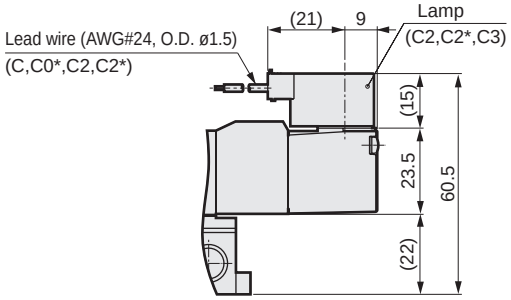

● D-connector: (D/D1/D0*/D2/D2*/D3)

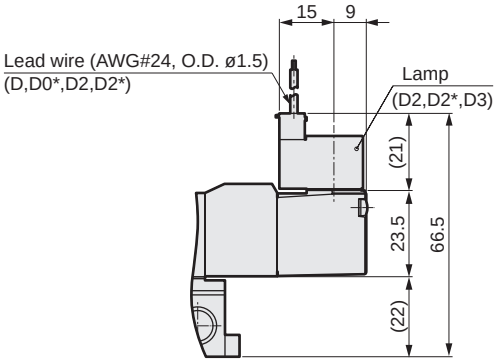

● External pilot: (K)

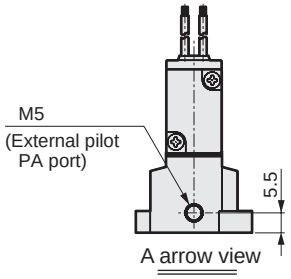

Dimensions CAD

4KB210

● 2-position single: grommet lead wire

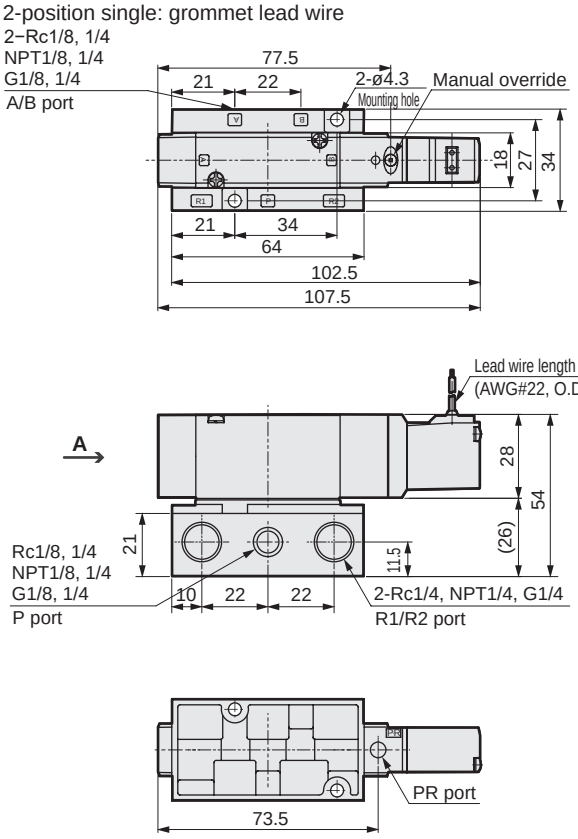

4KB220

● 2-position double: grommet lead wire

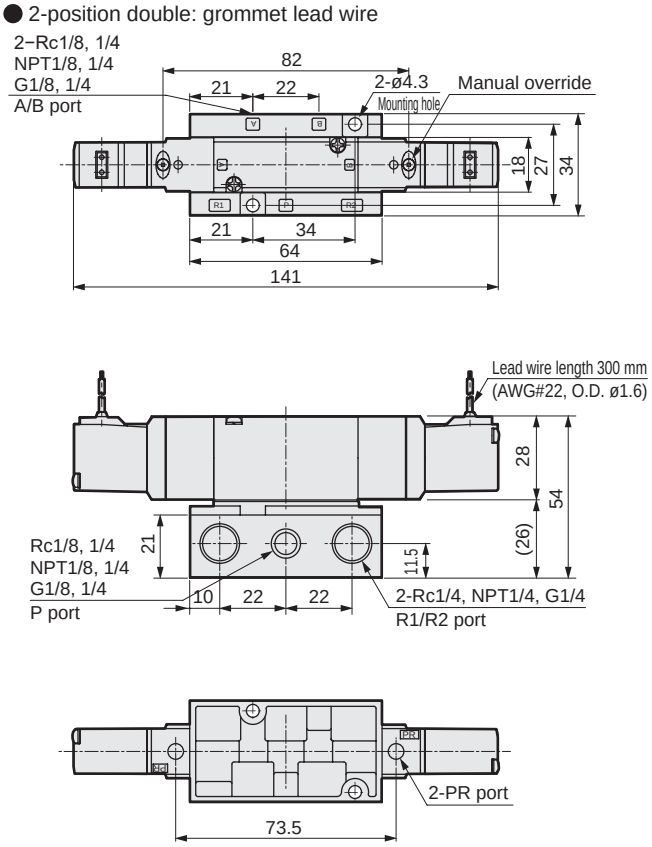

4KB2 $^{3}_{4}$0 $_{5}$

● 3-position: grommet lead wire

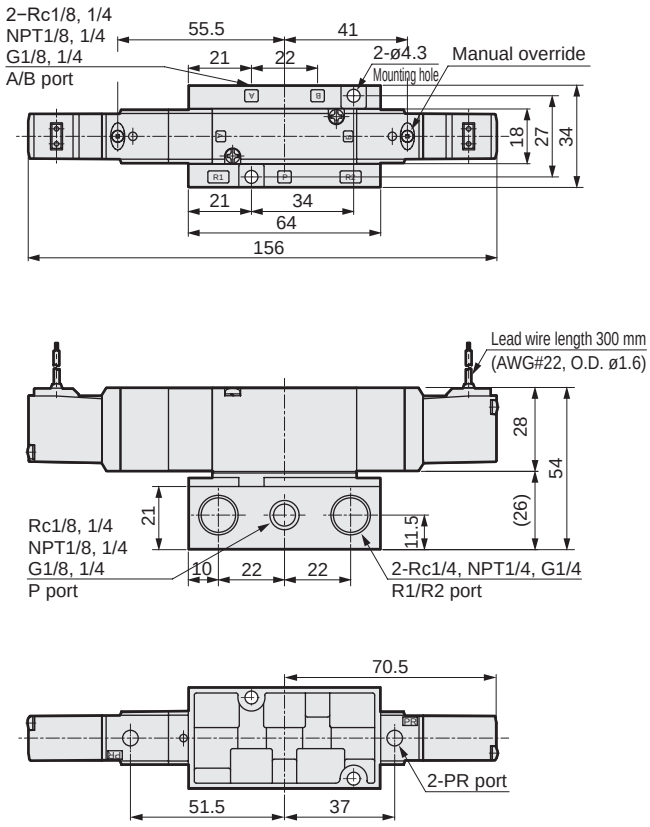

Dimensions

● Compact terminal box: (B [Without lamp]/L/LS [With lamp])

Without indicator lamp

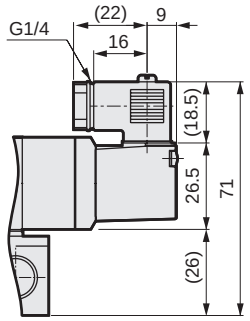

With indicator lamp

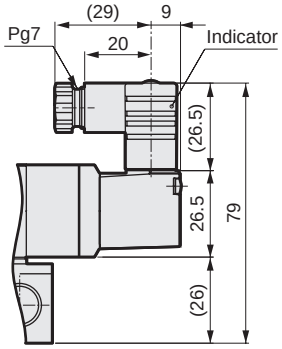

● C-connector: (C/C1/C0*/C2/C2*/C3)

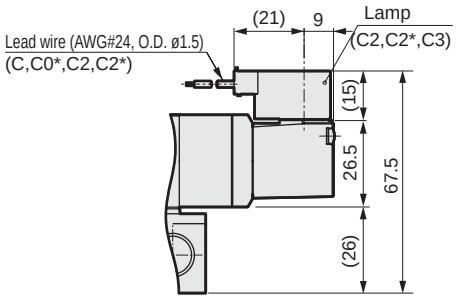

● D-connector: (D/D1/D0*/D2/D2*/D3)

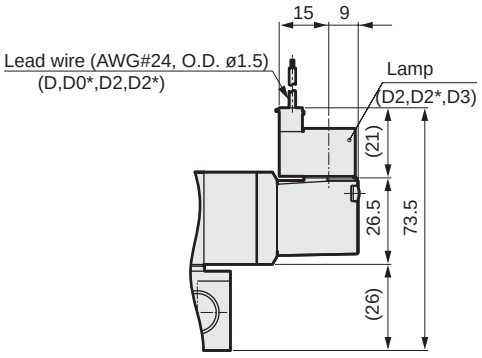

● External pilot: (K)

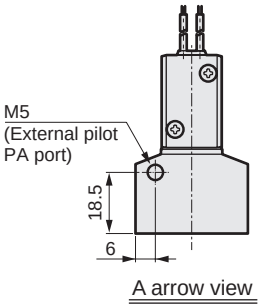

4GA/B
M4GA/B
MN4GA/B
4GA/B (master)
4GB With sensor
4GD/E
M4GD/E
MN4GD/E
4GA4/B4
MN3E MN4E
W4GA/B2
W4GB4
MN3S0 MN4S0
4SA/B0
4KA/B
4KA/B (master)
4F
4F (master)
PV5G GMF
PV5 GMF
PV5S-0
3Q
MV3QR
3MA/B0
3PA/B
P/M/B
NP/NAP NVP
4G*0EJ
4F*0EX
4F*0E
HMV HSV
2QV 3QV
SKH
Silencer
TotAirSys (Total Air)
TotAirSys (Gamma)
Ending

Dimensions CAD

4KB310

● 2-position single: grommet lead wire

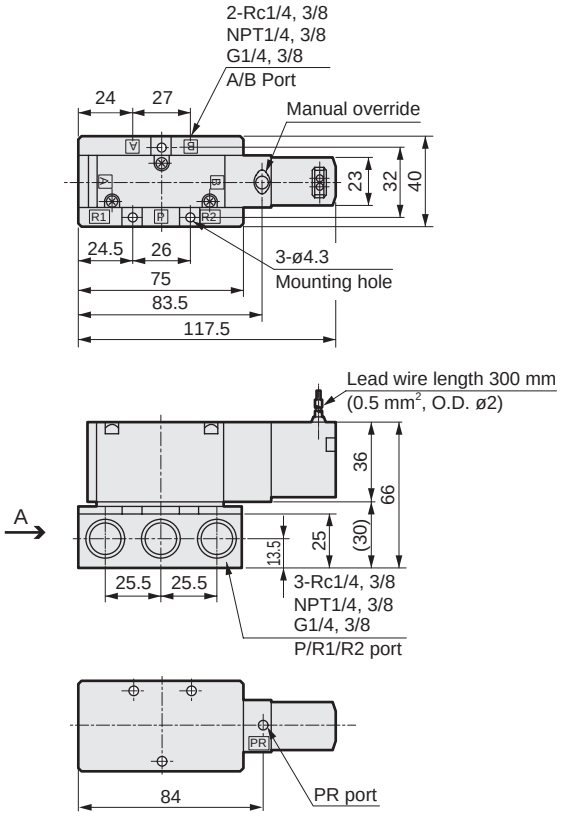

4KB320

● 2-position double: grommet lead wire

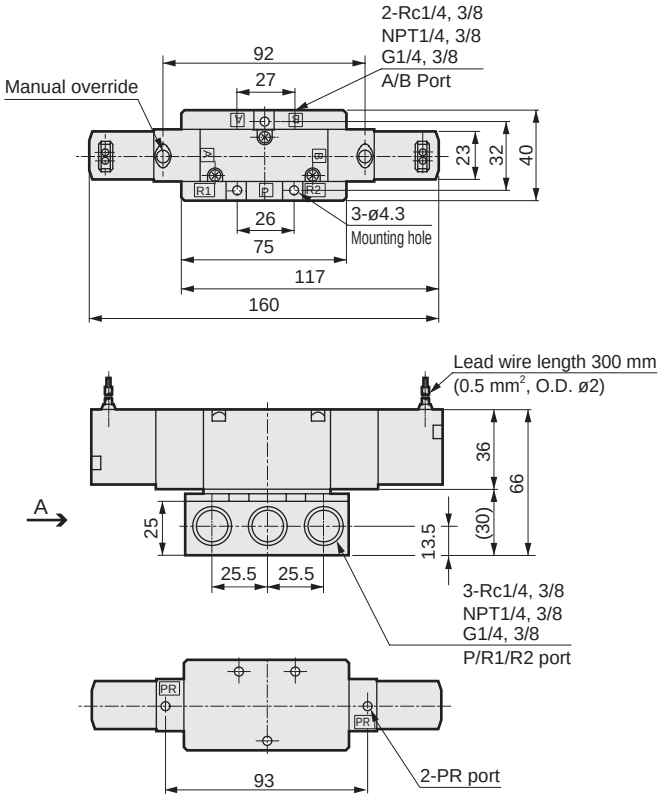

4KB3 3 4 0 5

● 3-position: grommet lead wire

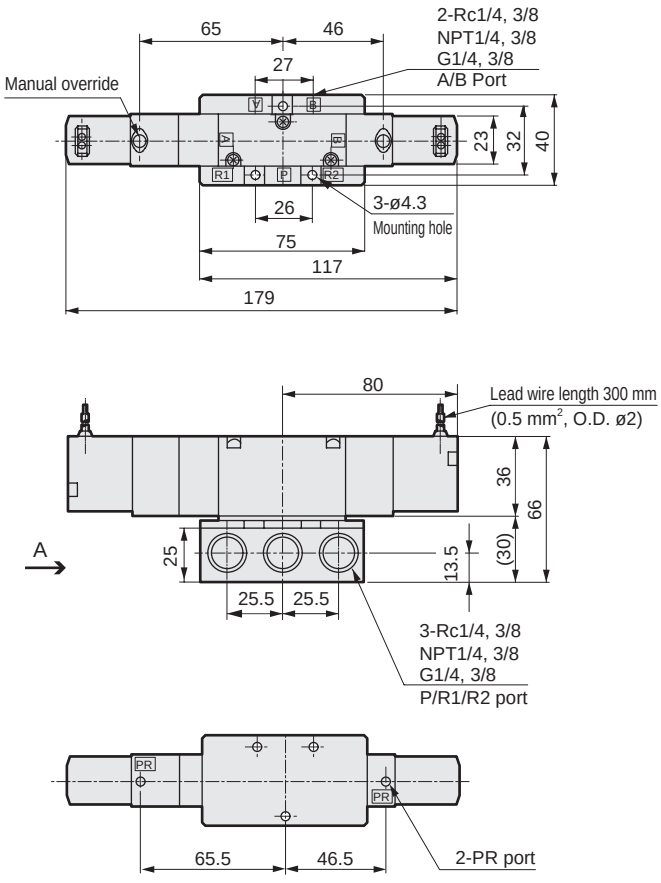

Dimensions

● Terminal box: (B/L/LS)

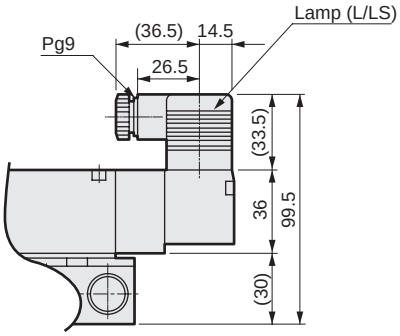

● C-connector: (C/C1/C0*/C2/C2*/C3)

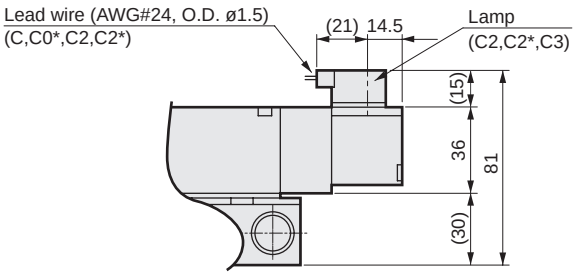

● D-connector: (D/D1/D0*/D2/D2*/D3)

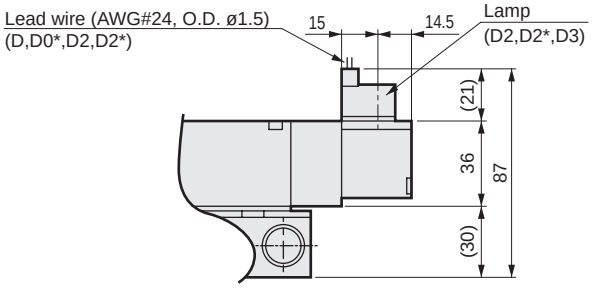

● External pilot: (K)

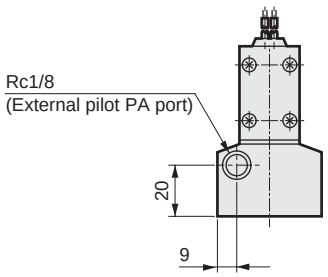

A arrow view

Dimensions

4KB410

● 2-position single: grommet lead wire

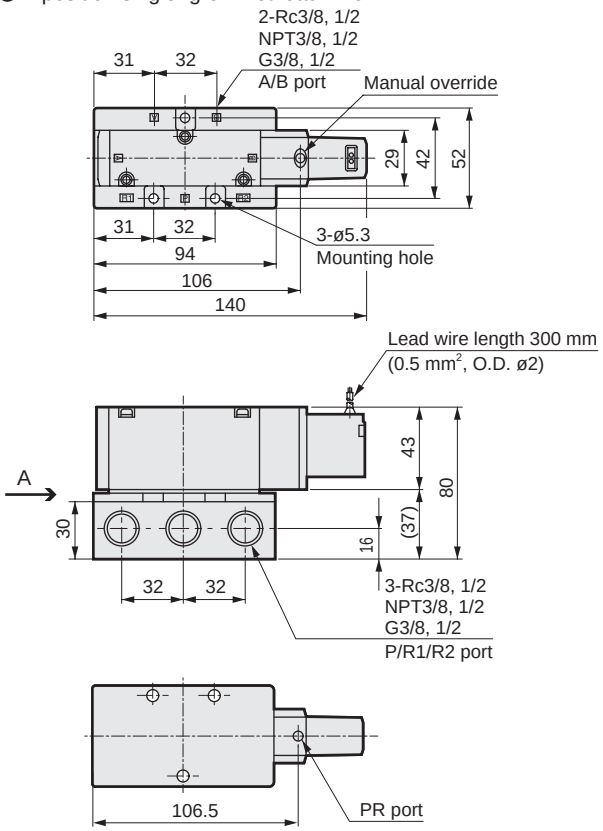

4KB420

● 2-position double: grommet lead wire

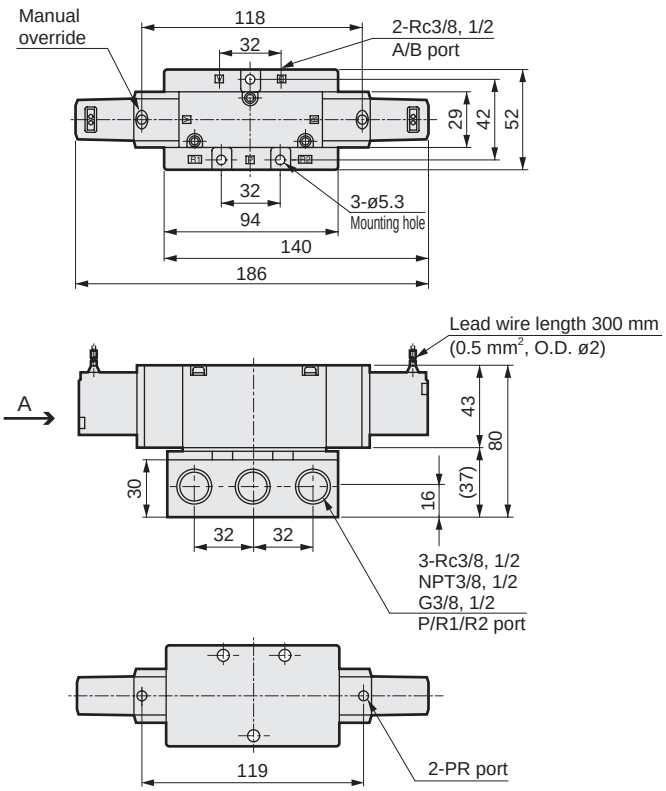

4KB4$^{3}_{5}$40

● 3-position: grommet lead wire

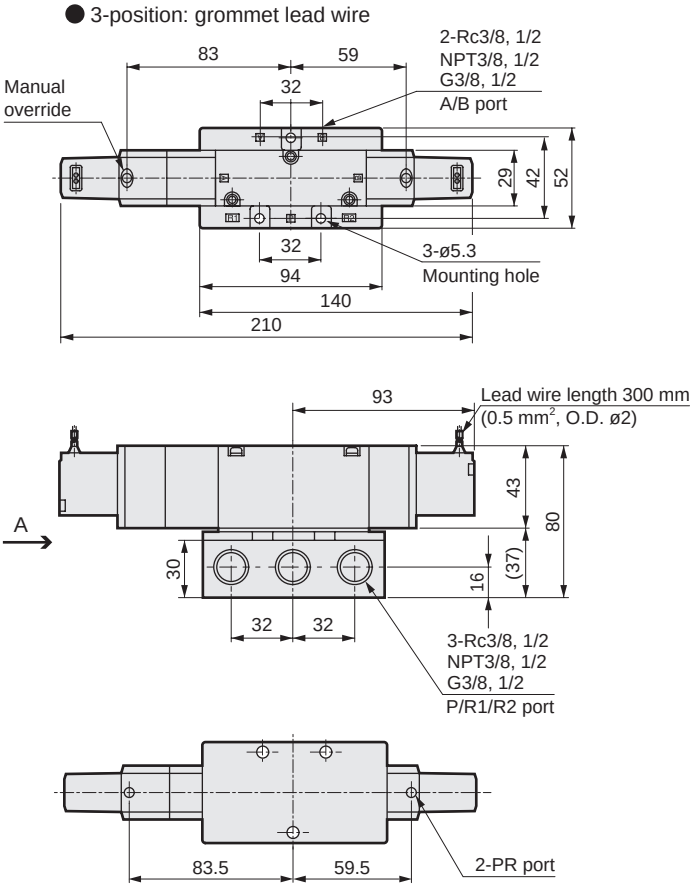

Dimensions

● Terminal box: (B/L/LS)

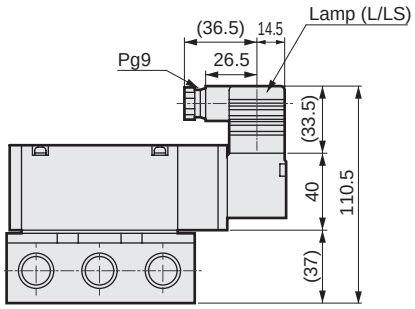

● C-connector: (C/C1/C0*/C2/C2*/C3)

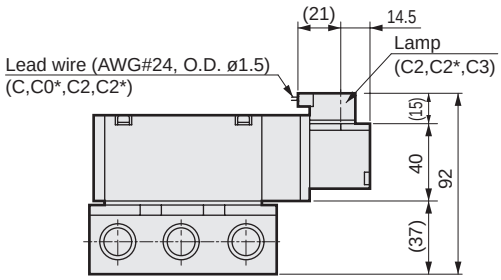

● D-connector: (D/D1/D0*/D2/D2*/D3)

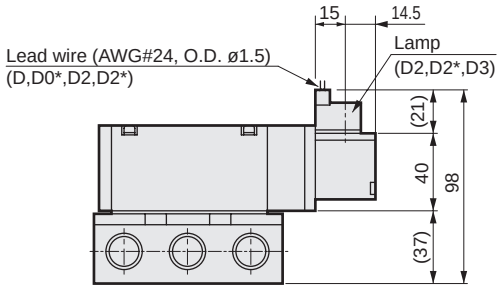

● External pilot: (K)

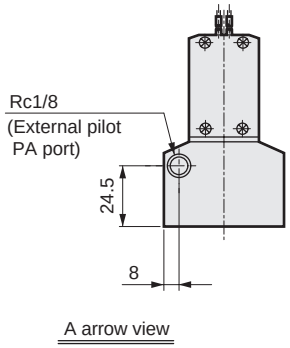

A arrow view

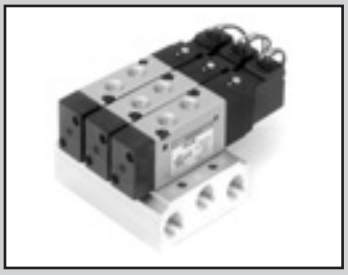

Individual wiring manifold body piping
Pilot operated 3, 5-port pneumatic valve

M3KA1/M4KA1/2/3/4 Series

● Cylinder bore size: ø20 to ø160

CE Refer to the Ending for details. RoHS CAD

JIS symbol

● 3-port valve
2-position NC single

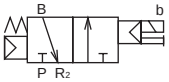

● 3-port valve
2-position NO single



● 3-port valve
2-position NC double

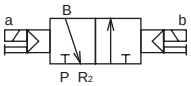

● 5-port valve
2-position single

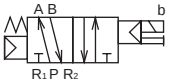

● 5-port valve
2-position double

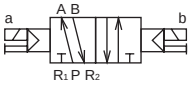

● 5-port valve
3-position all ports closed

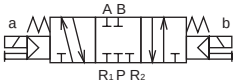

● 5-port valve
3-position A/B/R connection

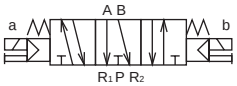

● 5-port valve
3-position P/A/B connection



Common specifications

Item	Description
Manifold method	Manifold integrated
Manifold	Common supply, common exhaust
Station No.	(*1): 2 to 20 stations
Valve and operation	Pilot operated soft spool valve
Working fluid	Compressed air
Max. working press MPa	0.70 (≈100 psi, 7 bar)
Min. working press MPa	Refer to Individual specifications listed below
Proof pressure MPa	1.05 (≈150 psi, 10.5 bar)
Ambient temperature °C	-5 (23°F) to 50 (122°F) (no freezing)
Fluid temperature °C	5 (41°F) to 50 (122°F)
Lubrication	Not required
Degree of protection	Dust-proof
Vibration resistance m/s²	50 or less
Shock resistance m/s²	300 or less
Atmosphere	Cannot be used in corrosive gas environment.

*1: The max. station numbers for 4KA3/4 are 15 stations and 12 stations, respectively.

Electrical specifications

Item			3KA1, 4KA1/2	4KA3/4
Rated voltage V	AC		100,200 (50 / 60 Hz)	
	DC		24	
Voltage fluctuation range			±10%	
Starting current A	AC	100 V	0.056/0.044	0.046/0.042
	AC	200 V	0.028/0.022	0.023/0.021
Holding current A	AC	100 V	0.028/0.022	0.023/0.021
	AC	200 V	0.014/0.011	0.014/0.011
	DC	24 V	0.075	
Power consumption W ( ): With indicator	AC	100 V	1.8 / 1.4 (1.8 / 1.5)	1.6 / 1.3 (1.8 / 1.5)
	AC	200 V	1.8 / 1.4 (1.8 / 1.5)	1.6 / 1.3 (1.8 / 1.5)
	DC	24 V	1.8 (2.0)	
Thermal class			B (molded coil)	
Temperature rise °C			43	30

Reference: 100 VAC 50/60 Hz can be used with a rated voltage of 110 VAC 60 Hz and 200 VAC 50/60 Hz can be used with 220 VAC 60 Hz.

Individual specifications

1 MPa ≈ 145.0 psi, 1 MPa = 10 bar

Item			3KA1	4KA1	4KA2	4KA3	4KA4
Min. working pressure MPa	2-position	Single	0.15	0.15	0.15	0.15	0.15
		Double			0.10	0.10	0.10
	3-position		-	0.20	0.20	0.20	0.20
Port size	A/B Port		M5, M5N, M5G Push-in fitting ø4, ø6	M5, M5N, M5G Push-in fitting ø4, ø6	Rc1/8, NPT1/8, G1/8 Push-in fitting ø6, ø8	Rc1/4, NPT1/4, G1/4 Push-in fitting ø8, ø10	Rc3/8, NPT3/8, G3/8 Push-in fitting ø10, ø12
	P/R1/R2 port		Rc1/8, NPT1/8, G1/8	Rc1/8, NPT1/8, G1/8	Rc1/4, NPT1/4, G1/4	Rc3/8, NPT3/8, G3/8	Rc1/2, NPT1/2, G1/2

Performance/characteristics by model

Item		3KA1	4KA1	4KA2	4KA3	4KA4
Response time (*2) ms	2-position	30 or less	30 or less	30 or less	30 or less	30 or less
	3-position	-	60 or less	60 or less	60 or less	60 or less

*2: The response time is the value at 0.5 MPa working pressure, with no lubrication, and with the power ON. It depends on the pressure and the lubricant quality.

Weight

Item			3KA1	4KA1	4KA2	4KA3	4KA4
Weight g (solenoid valve only)	2-position	Single	70	70	115	214	325
		Double	110	110	155	315	435
	3-position		-	120	170	354	505
Manifold base Weight calculation formula (n: station No.) g			60.5xn+58.5	60.5xn+58.5	62.5xn+65.0	105.5xn+97.0	194.5xn+185.5

Flow characteristics

Model No.	Solenoid position		C[dm³/(s·bar)]	b
3KA1	2-position		0.69	0.29
4KA1	2-position		0.69	0.29
	3-position	All ports closed	0.69	0.29
		A/B/R connection	0.97	0.31
		P/A/B connection	0.73	0.30
4KA2	2-position		2.6	0.25
	3-position	All ports closed	2.4	0.32
		A/B/R connection	3.0	0.16
		P/A/B connection	2.4	0.31
4KA3	2-position		5.6	0.39
	3-position	All ports closed	4.1	0.51
		A/B/R connection	5.9	0.37
		P/A/B connection	4.1	0.56
4KA4	2-position		9.7	0.29
	3-position	All ports closed	8.3	0.40
		A/B/R connection	11	0.30
		P/A/B connection	8.7	0.46

*1:Effective cross-sectional area S and sonic conductance C are converted as S ≈ 5.0 × C.
*2:Flow characteristics are values when the port size is M5 (3KA1, 4KA1), Rc1/8 (4KA2), Rc1/4 (4KA3), or Rc3/8 (4KA4).

Ozone-proof specifications

(Ending Page 5)

** - Voltage - **P11**

Copper and PTFE free specifications

● Copper- and PTFE-based materials are not used in the flow path.

** - Voltage - **P6**

CE marking specifications

** - Voltage - **ST**

• Standard voltage of 24 VDC or less is CE marking-compatible even if the model No. is not indicated with "ST".

How to order

● Single solenoid valve for manifold

4KA1 | 1 | 9 | - | 06 | - | M1 | B | ( ) | —— | AC100V

* Gasket/mounting screw attached (*5)

● Manifold

M | 4KA2 | 1 | 0 | - | 06 | - | M1 | B | ( ) | - | 5 | - | AC100V | -

Indicate the valve model based quantity display position when using a mix manifold. Refer to the following page.

2	2	0	0	0	1

Ⓐ Model No. Ⓑ Solenoid position Ⓒ Port size Ⓓ Manual override Ⓔ Electrical connections * Refer to page 1263 for the circuit diagram with surge suppressor/lamp. Ⓕ Others Option Ⓖ Station No. Ⓗ Voltage

Code		Description	Ⓐ Model No. 3KA1	4KA1	4KA2	4KA3	4KA4
Ⓑ Solenoid position	1	2-position single		●	●	●	●
	2	2-position double	●	●	●	●	●
	3	3-position all ports closed		●	●	●	●
	4	3-position A/B/R connection		●	●	●	●
	5	3-position P/A/B connection		●	●	●	●
	1	2-position single normally closed	●				
	11	2-position single normally open	●				
	8	Mix manifold (*1) (when there are multiple solenoid positions)	●	●	●	●	●

Code	Port	A/B port	R1/R2 port (1) = Rc1/8 (2) = Rc1/4 (3) = Rc3/8 (4) = Rc1/2				
Ⓒ Port size	M5	M5	(1)	(1)			
	06	Rc1/8			(2)		
	08	Rc1/4				(3)	
	10	Rc3/8					(4)
	GS4	ø4 Push-in fitting	(1)	(1)			
	GS6	ø6 Push-in fitting	(1)	(1)	(2)		
	GS8	ø8 Push-in fitting			(2)	(3)	
	GS10	ø10 Push-in fitting				(3)	(4)
	GS12	ø12 Push-in fitting					(4)
	Port	A/B port	R1/R2 port (5) = NPT1/8 (6) = NPT1/4 (7) = NPT3/8 (8) = NPT1/2				
	M5N	M5	(5)	(5)			
	06N	NPT1/8			(6)		
	08N	NPT1/4				(7)	
	10N	NPT3/8					(8)
	GS4N	ø4 Push-in fitting	(5)	(5)			
	GS6N	ø6 Push-in fitting	(5)	(5)	(6)		
	GS8N	ø8 Push-in fitting			(6)	(7)	
	GS10N	ø10 Push-in fitting				(7)	(8)
	GS12N	ø12 Push-in fitting					(8)
	Port	A/B port	R1/R2 port (9) = G1/8 (10) = G1/4 (11) = G3/8 (12) = G1/2				
	M5G	M5	(9)	(9)			
	06G	G1/8			(10)		
	08G	G1/4				(11)	
	10G	G3/8					(12)
	GS4G	ø4 Push-in fitting	(9)	(9)			
	GS6G	ø6 Push-in fitting	(9)	(9)	(10)		
	GS8G	ø8 Push-in fitting			(10)	(11)	
	GS10G	ø10 Push-in fitting				(11)	(12)
	GS12G	ø12 Push-in fitting					(12)

Ⓓ	Blank	Non-locking manual override	●	●	●	●	●
	M1	Locking manual override	●	●	●	●	●
Ⓔ	Refer to the electrical connections list on the next page.						
Ⓕ	Blank	No option	●	●	●	●	●
	S	Surge suppressor attached (*3) (*4)	●	●	●	●	●
	-A	Coolant supported (packing: FKM)	●	●	●	●	●
Ⓖ	2 to 12	2 stations to 12 stations					●
	2 to 15	2 stations to 15 stations				●	
	2 to 20	2 stations to 20 stations	●	●	●		

Ⓗ Voltage	AC100V	100 VAC 50/60 Hz	Standard	●	●	●	●	●
	AC200V	200 VAC 50/60 Hz		●	●	●	●	●
	DC24V	24 VDC		●	●	●	●	●
	DC12V	12 VDC	Option	●	●	●	●	●
	AC110V	110 VAC 50/60 Hz		●	●	●	●	●
	AC220V	220 VAC 50/60 Hz		●	●	●	●	●

* Other custom order products					
AC24V	●	●	●	●	●
AC115V	●	●	●	●	●
AC120V	●	●	●	●	●

[Table 1] Compact terminal box L/LS compatibility table

Code	Description			3KA1	4KA1	4KA2	4KA3	4KA4	Surge suppressor
L	Without lead wire	With indicator lamp	AC	●	●	●	●	●	
			DC				●	●	
		with surge suppressor/ indicator lamp	AC						
			DC	●	●	●			Integrated
LS	Without lead wire	with surge suppressor/ indicator lamp	AC	●	●	●	●	●	Integrated
			DC				●	●	Integrated

Precautions for model No. selection

*1 : When the solenoid position is mixed (8), indicate the content of the combination at the end of the model No. Refer to the following page.

*2 : The DC voltage models of the compact terminal box "L" of 3KA1, 4KA1, and 4KA2 are equipped with a surge suppressor.

*3 : The surge suppressor for attachment is a suppression connector when the grommet lead wire is 24 VDC or less. (Refer to page 1262)

*4 : The surge suppressor can only be selected when the grommet lead wire or compact terminal box "B" has been selected for the electrical connections.

*5 : With regard to the printed model No., although the model No. when placing an order is "4KA□□9", the model No. listed on the product name plate will be "4KA□□0".

[Example of model No.]

M4KA210-06-M1B-2-AC100V

Ⓐ Model : 4KA2
Ⓑ Solenoid position : 2-position single
Ⓒ Port size : Rc1/8
Ⓓ Manual override : Locking manual override
Ⓔ Electrical connections : Compact terminal box/without lead wire
Ⓕ Other options : None
Ⓖ Station No. : 2 stations
Ⓗ Voltage : 100 VAC 50/60 Hz

[Electrical connection list]

	Code	Description	Ⓐ Model No. 3KA1	4KA1	4KA2	4KA3	4KA4
Ⓔ Electrical connections	Grommet lead wire						
	Blank	Grommet lead wire (300 mm)	●	●	●	●	●
	Compact terminal box						
	B	Without lead wire	●	●	●	●	●
	L	Without lead wire	Refer to [Table 1] on the previous page for details (*2)				
	LS	Without lead wire, with surge suppressor/lamp					
	C-connector (lead wire lateral direction)						
	C	Lead wire length (300 mm)	●	●	●	●	●
	C00	Lead wire length (500 mm)	●	●	●	●	●
	C01	Lead wire length (1000 mm)	●	●	●	●	●
	C02	Lead wire length (2000 mm)	●	●	●	●	●
	C03	Lead wire length (3000 mm)	●	●	●	●	●
	C1	Without lead wire	●	●	●	●	●
	C2	Lead wire length (300 mm) with surge suppressor/lamp	●	●	●	●	●
	C20	Lead wire length (500 mm) with surge suppressor/lamp	●	●	●	●	●
	C21	Lead wire length (1000 mm) with surge suppressor/lamp	●	●	●	●	●
	C22	Lead wire length (2000 mm) with surge suppressor/lamp	●	●	●	●	●
	C23	Lead wire length (3000 mm) with surge suppressor/lamp	●	●	●	●	●
	C3	Without lead wire, with surge suppressor/lamp	●	●	●	●	●
	D-connector (lead wire upward direction)						
	D	Lead wire length (300 mm)	●	●	●	●	●
	D00	Lead wire length (500 mm)	●	●	●	●	●
	D01	Lead wire length (1000 mm)	●	●	●	●	●
	D02	Lead wire length (2000 mm)	●	●	●	●	●
	D03	Lead wire length (3000 mm)	●	●	●	●	●
	D1	Without lead wire	●	●	●	●	●
	D2	Lead wire length (300 mm) with surge suppressor/lamp	●	●	●	●	●
	D20	Lead wire length (500 mm) with surge suppressor/lamp	●	●	●	●	●
	D21	Lead wire length (1000 mm) with surge suppressor/lamp	●	●	●	●	●
	D22	Lead wire length (2000 mm) with surge suppressor/lamp	●	●	●	●	●
	D23	Lead wire length (3000 mm) with surge suppressor/lamp	●	●	●	●	●
	D3	Without lead wire, with surge suppressor/lamp	●	●	●	●	●

How to order masking plate kit

M **4KA180** **-** **MP-KIT**

* Gasket/mounting screw attached

Ⓐ Model No.

Ⓐ Model No.
4KA180
4KA280
4KA380
4KA480

How to order mix manifold

· 3-port valve

M **3KA1** **8** **0** **-** **M5** **-** **4** **-** **AC100V** **-**

S10	S11	S20	MP
3	0	0	1

S10=1 to 3 MP=4

· 5-port valve

M **4KA3** **8** **0** **-** **06** **-** **7** **-** **AC100V** **-**

S1	S2	S3	S4	S5	MP
2	2	2	1	0	0

S1=1, 6 S2=2, 5 S3=3, 4 S4=7

Mix manifold “8”

* For How to order other items, refer to the previous page.

How to fill in form for ordering a mix manifold | Manifold specifications sheet (page 1328)

(1) List the quantity for each function (solenoid position) at the end of How to order. The functions and codes are as shown below.

Example: 5-port valve 2-position single → S1

S1	S2	S3	S4	S5	MP
2	2	2	1	0	0

List the quantity

· 3-port valve

Code	Function (solenoid position)
S10	3-port valve 2-position single NC
S11	3-port valve 2-position single NO
S20	3-port valve 2-position double
MP	Masking plate

· 5-port valve

Code	Function (solenoid position)
S1	2-position single
S2	2-position double
S3	3-position all ports closed
S4	3-position A/B/R connection
S5	3-position P/A/B connection
MP	Masking plate

● With a mix manifold, when using 10 or more actuators of the same model No., specify using the codes in the table below.

Actuator quantity	10	11	12	13	14	15	16	17	18	19
Code	A	B	C	D	E	F	G	H	I	J

(2) List the function (solenoid position) and layout position in the field for remarks.

Solenoid position code = ◯, ◯th station (where the left side is the 1st station when the piping port is facing forward.)

Example: S10 = 1 to 3 (1st to 3rd stations are 3-port valve 2-position single NC)
Example: S1 = 1, 6 (1st, 6th stations are 5-port valve 2-position single)

[Example of model No. 1]

For 3-port valve 4 stations

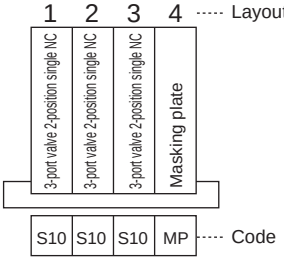

3-port valve 2-position single (S10) : 3 units (1st to 3rd station)
Masking plate (MP) : 1 unit (4th station)

M3KA180-M5-4-AC100V **-**

S10	S11	S20	MP
3	0	0	1

S10=1 to 3 MP=4

[Example of model No. 2]

For 5-port valve 7 stations

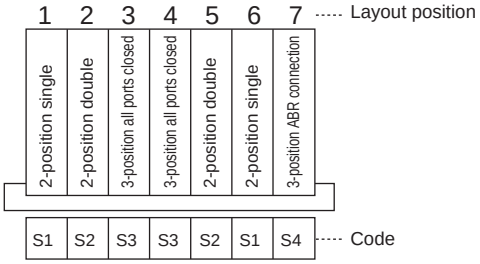

2-position single (S1) : 2 units (1st station, 6th station)
2-position double (S2) : 2 units (2nd station, 5th station)
3-position all ports closed (S3) : 2 units (3rd station, 4th station)
3-position ABR connection (S4) : 1 unit (7th station)

M4KA380-06-7-AC100V **-**

S1	S2	S3	S4	S5	MP
2	2	2	1	0	0

S1=1, 6 S2=2, 5 S3=3, 4 S4=7

Manifold components explanation and parts

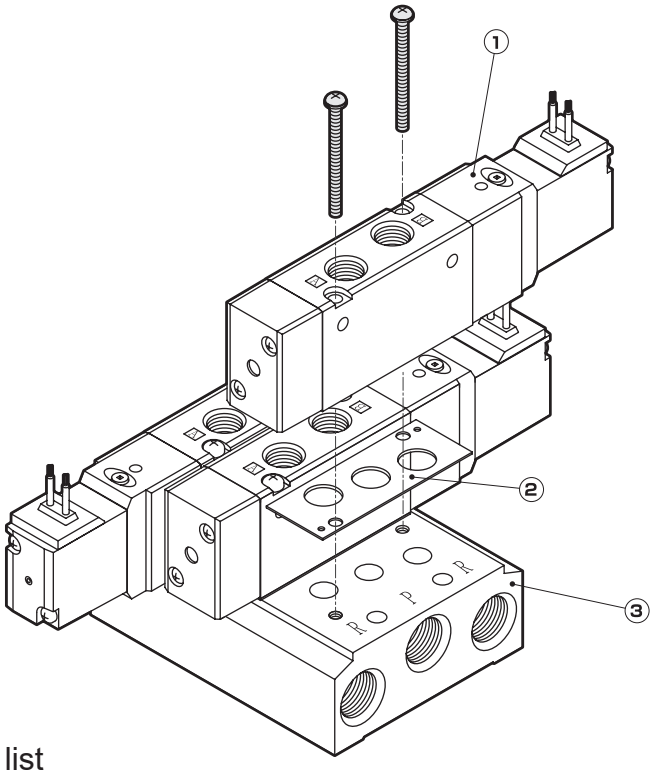

Main configuration parts list

No.	Component name	Model No. (example)	Content
1	Single solenoid valve	3/4 KA □□ 9-□-□□□-□ └Voltage └Option └Electrical connections └Manual override └Bore size └Solenoid position └Series flow rate size	Single solenoid valve Mounting screws x 2 Gasket
2	Gasket kit	M4KA/10-GASKET-KIT	Gasket Mounting screws x 2
3	Manifold sub-plate kit	M4KA □ 10- □-□-SUB-BASE-KIT └Station No. └Bore size └Series flow rate size	Manifold sub-plate Mounting screws x 2 x station No. Gasket x station No.

Consumable parts list

No.	Part name	Model No.	Compatibility
-	Coil assembly	4K1L-□-COIL-□ Electrical connections / Voltage	3KA1 4KA1 4KA2
		4K3-□-COIL-□ Electrical connections / Voltage	4KA3 4KA4
-	Spool assembly	4K9-□ 110	3KA11(1)0, 4KA110
		118	3KA120, 4KA120
		111	4KA130
		112	4KA140
		113	4KA150
		150	4KA210
		126	4KA220
		127	4KA230
		128	4KA240
		129	4KA250
		133	4KA310, 4KA320
		134	4KA330
		135	4KA340
		136	4KA350
		140	4KA410, 4KA420
		141	4KA430
		142	4KA440
		143	4KA450

No.	Part name	Model No.	Compatibility
-	Piston assembly	4K9-□ 151	3KA11(1)0, 4KA110 3KA120, 4KA120
		152	4KA130 4KA140 4KA150
		153	4KA210 4KA220
		154	4KA230 4KA240 4KA250
		137	4KA310, 4KA320
		138	4KA330 4KA340 4KA350
		144	4KA410, 4KA420
		145	4KA430 4KA440 4KA450

Dimensions CAD

M3KA1-M5*

● 3-port valve / port size M5: grommet lead wire

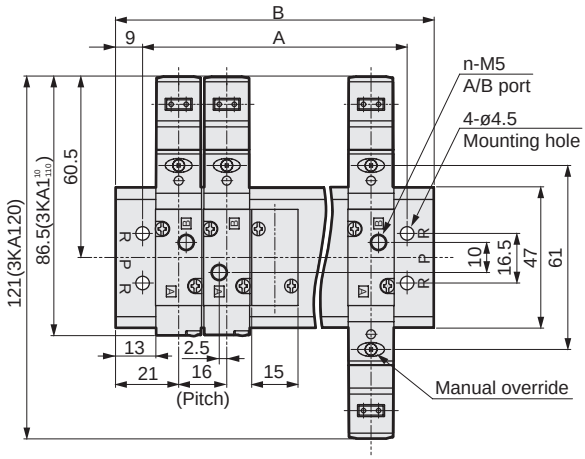

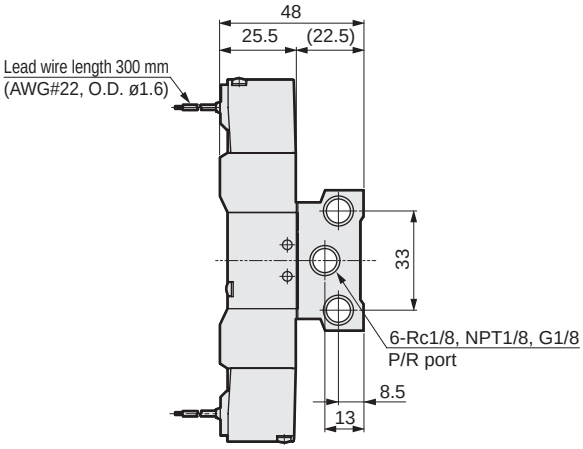

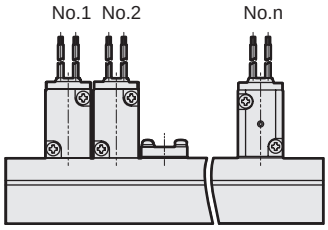

■ Single model No. for manifold
3KA1*9-M5-option**-**voltage

* : When using 3KA119-M5, the B port will be the connection port.
When using 3KA1119-M5, the A port will be the connection port.

M4KA1-M5*

● 5-port valve / port size M5: grommet lead wire

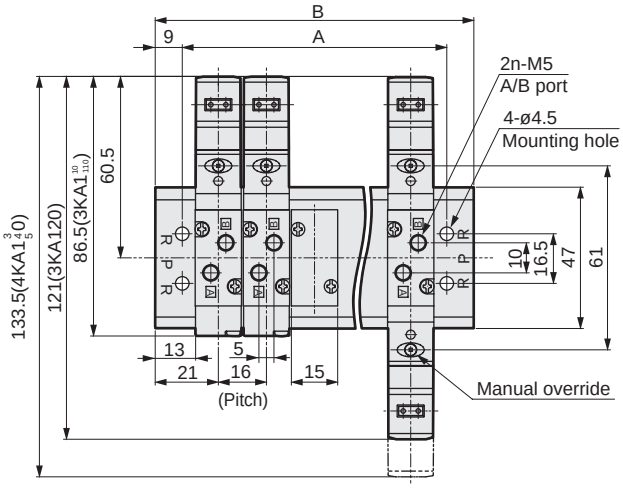

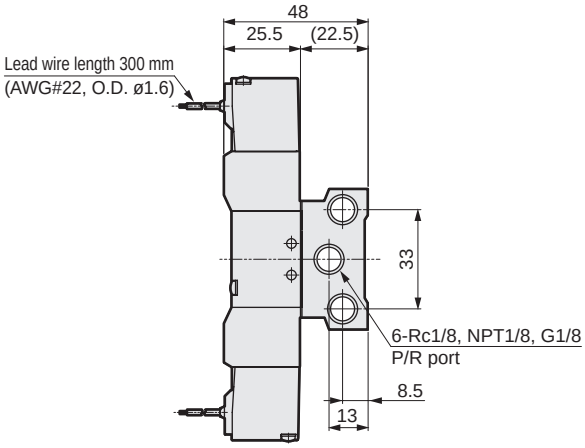

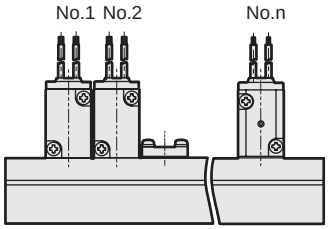

■ Single model No. for manifold
4KA1*9-M5**-option**-**voltage

Station No.	2	3	4	5	6	7	8	9	10	11	12	13	14	15	16	17	18	19	20
A	40	56	72	88	104	120	136	152	168	184	200	216	232	248	264	280	296	312	328
B	58	74	90	106	122	138	154	170	186	202	218	234	250	266	282	298	314	330	346

Dimensions

M3KA1 (3-port valve)

● ø4/ø6 push-in fitting (GS4*/GS6*)

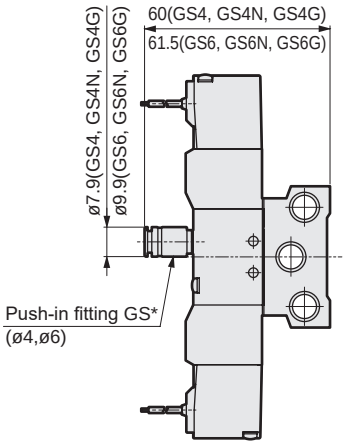

● Compact terminal box: (B/L/LS)

Without indicator lamp

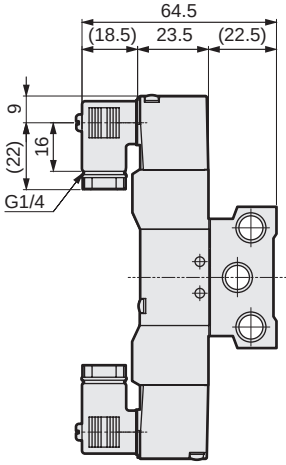

With indicator lamp

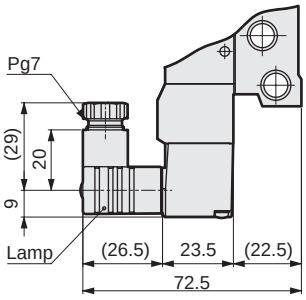

● C-connector: (C/C1/C0*/C2/C2*/C3)

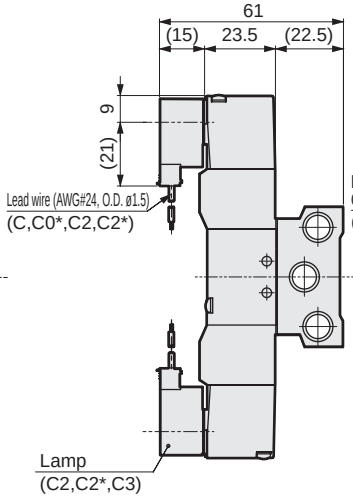

● D-connector: (D/D1/D0*/D2/D2*/D3)

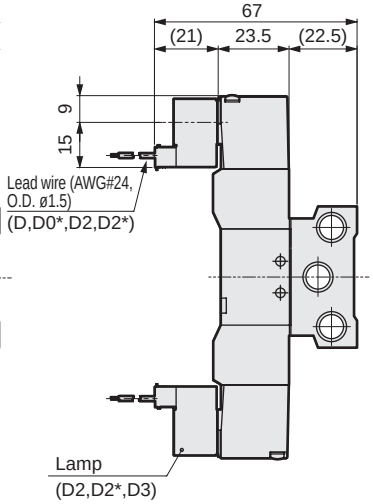

M4KA1 (5-port valve)

● ø4/ø6 push-in fitting (GS4*/GS6*)

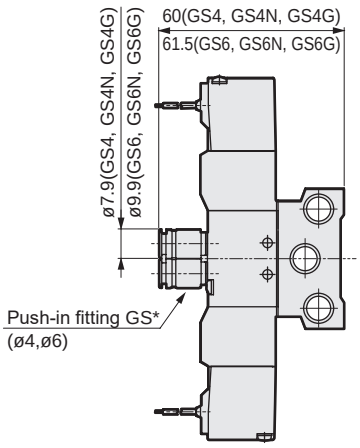

● Compact terminal box: (B/L/LS)

Without indicator lamp

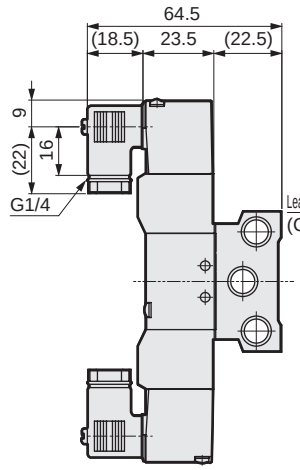

With indicator lamp

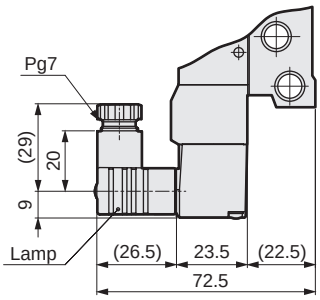

● C-connector: (C/C1/C0*/C2/C2*/C3)

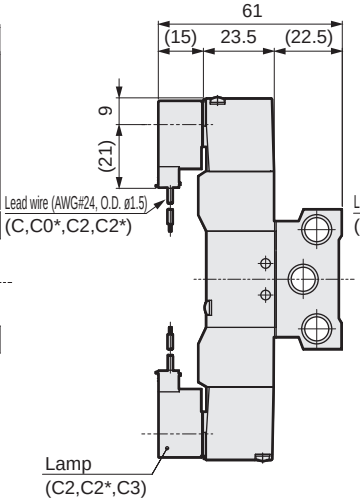

● D-connector: (D/D1/D0*/D2/D2*/D3)

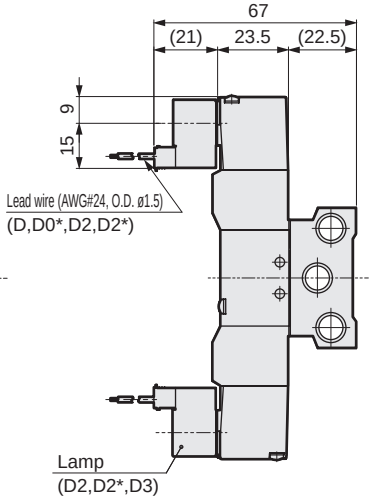

Dimensions CAD

M4KA2-06, 06N, 06G

● Port size Rc1/8, NPT1/8, G1/8: grommet lead wire

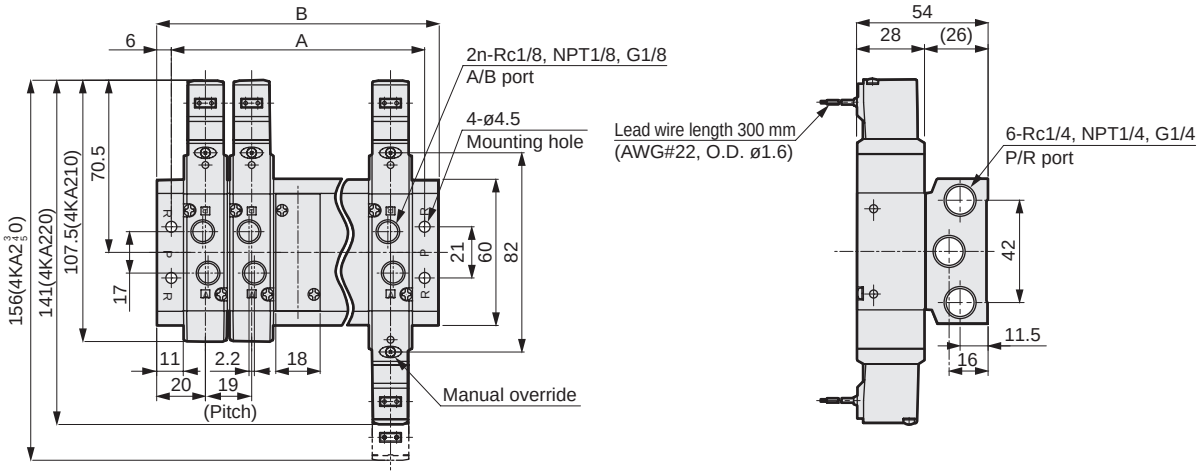

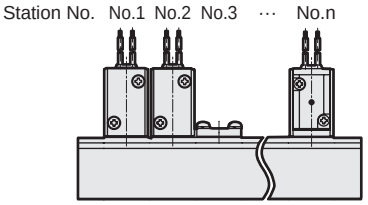

■ Single model No. for manifold
4KA2*9-06-option-voltage

Station No.	2	3	4	5	6	7	8	9	10	11	12	13	14	15	16	17	18	19	20
A	47	66	85	104	123	142	161	180	199	218	237	256	275	294	313	332	351	370	389
B	59	78	97	116	135	154	173	192	211	230	249	268	287	306	325	344	363	382	401

M4KA3-08, 08N, 08G

● Port size Rc1/4, NPT1/4, G1/4: grommet lead wire

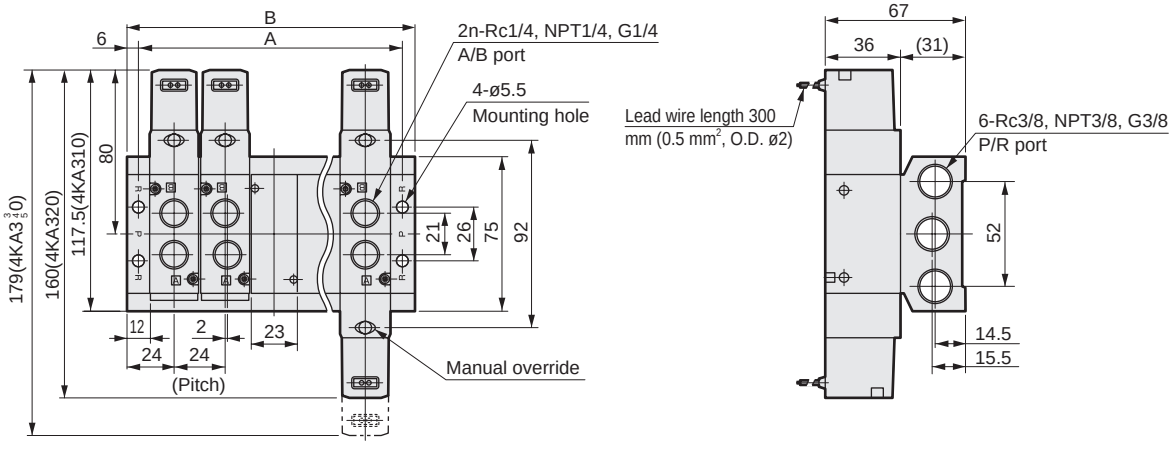

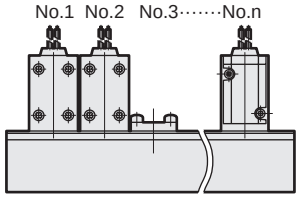

■ Single model No. for manifold
4KA3*9-08-option-voltage

Station No.	2	3	4	5	6	7	8	9	10	11	12	13	14	15
A	60	84	108	132	156	180	204	228	252	276	300	324	348	372
B	72	96	120	144	168	192	216	240	264	288	312	336	360	384

Dimensions

M4KA2

● ø6/ø8 push-in fitting:
(GS6*/GS8*)

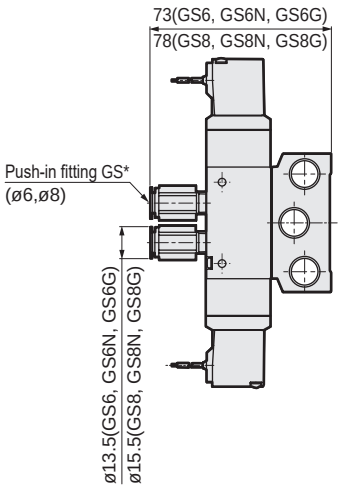

● Compact terminal box:
(B/L/LS)
Without indicator lamp

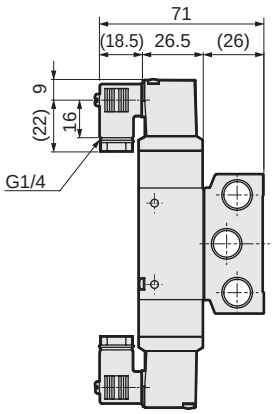

With indicator lamp

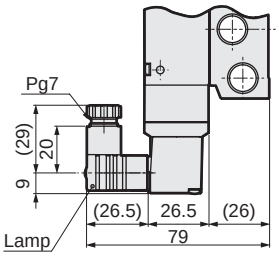

● C-connector:
(C/C1/C0*/C2/C2*/C3)

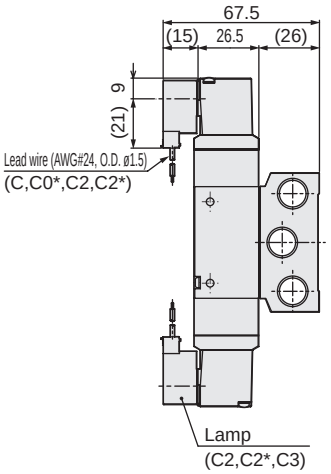

● D-connector:
(D/D1/D0*/D2/D2*/D3)

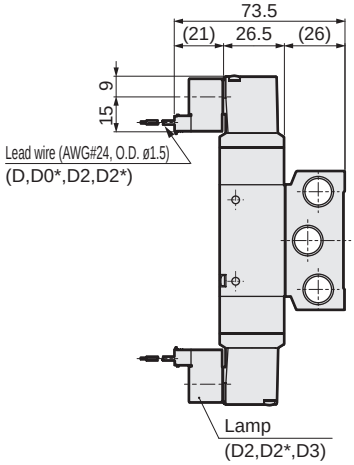

M4KA3

● ø8/ø10 push-in fitting:
(GS8*/GS10*)

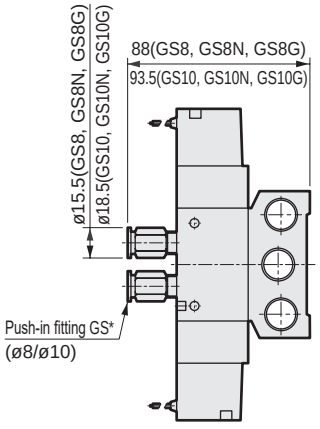

● Compact terminal box:
(B/L/LS)

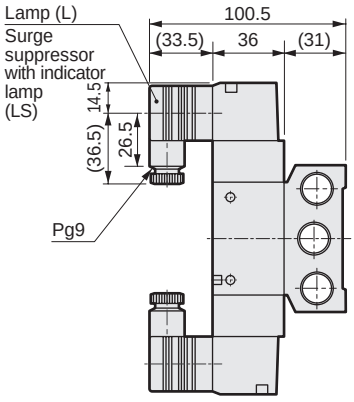

● C-connector:
(C/C1/C0*/C2/C2*/C3)

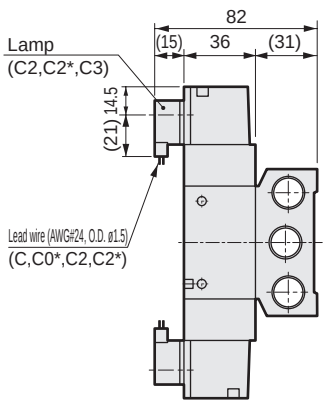

● D-connector:
(D/D1/D0*/D2/D2*/D3)

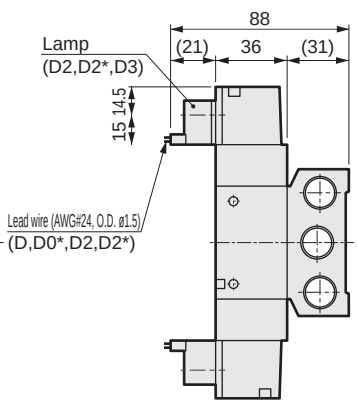

Dimensions CAD

M4KA4-10, 10N, 10G

● Port size Rc3/8, NPT3/8, G3/8: grommet lead wire

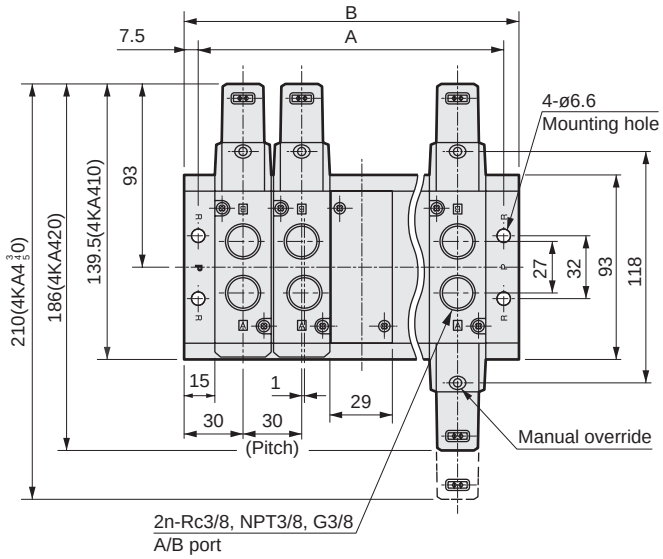

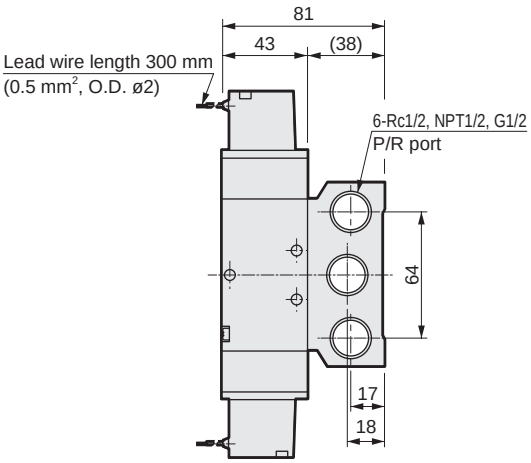

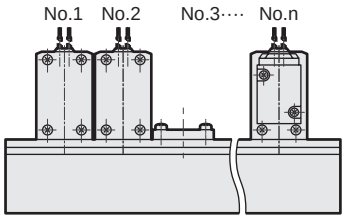

■ Single model No. for manifold
4KA4*9-10-option**-**voltage

Station No.	2	3	4	5	6	7	8	9	10	11	12
A	75	105	135	165	195	225	255	285	315	345	375
B	90	120	150	180	210	240	270	300	330	360	390

Dimensions

M4KA4

● ø10/ø12 push-in fitting:
(GS10*/GS12*)

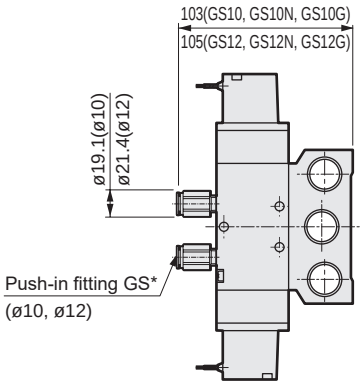

● Compact terminal box:
(B/L/LS)

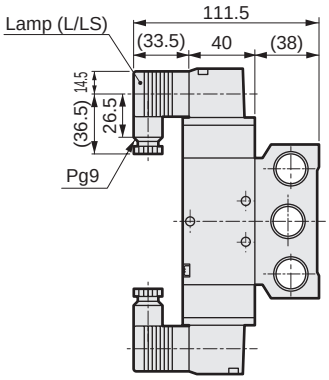

● C-connector:
(C/C1/C0*/C2/C2*/C3)

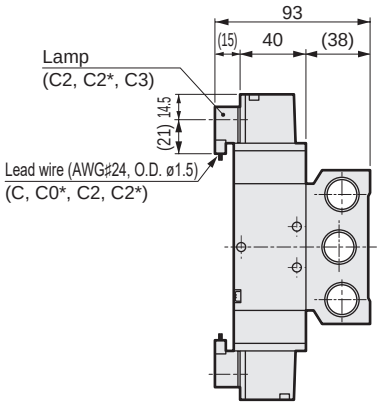

● D-connector:
(D/D1/D0*/D2/D2*/D3)

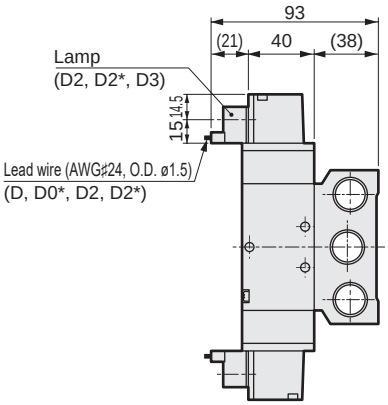



Individual wiring manifold sub-plate piping
Pilot operated 4, 5-port pneumatic valve

M4KB1/2/3/4 Series

● Cylinder bore size: ø20 to ø160

CE Refer to the Ending for details. RoHS CAD

JIS symbol

● 5-port valve
2-position single

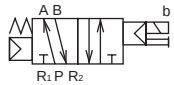

● 5-port valve
2-position double

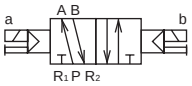

● 5-port valve
3-position all ports closed

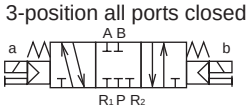

● 5-port valve
3-position A/B/R connection

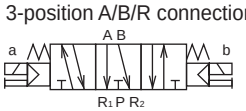

● 5-port valve
3-position P/A/B connection

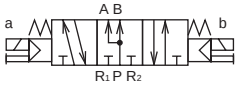

● External pilot

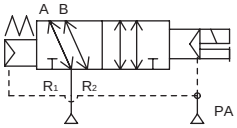

(2-position single)

Common specifications

Item	Description
Manifold method	Manifold integrated
Manifold	Common supply, common exhaust
Station No.	*1 2 to 20 stations
Valve and operation	Pilot operated soft spool valve
Working fluid	Compressed air
Max. working press MPa	0.70 (≈100 psi, 7 bar)
Min. working press MPa	Refer to Individual specifications listed below
Proof pressure MPa	1.05 (≈150 psi, 10.5 bar)
Ambient temperature °C	-5 (23°F) to 50 (122°F) (no freezing)
Fluid temperature °C	5 (41°F) to 50 (122°F)
Lubrication	Not required
Degree of protection	Dust-proof
Vibration resistance m/s²	50 or less
Shock resistance m/s²	300 or less
Atmosphere	Cannot be used in corrosive gas environment.

*1: The max. station numbers for 4KB3/4 are 15 stations and 12 stations, respectively.
*2: The working pressure when the external pilot (option code: K) has been selected is 0 to 0.7 MPa. In addition, use the pilot with a pressure of 0.2 to 0.7 MPa.

Electrical specifications

Item			4KB1/2	4KB3/4
Rated voltage V	AC		100,200 (50 / 60 Hz)	
	DC		24	
Voltage fluctuation range			±10%	
Starting current A	AC	100 V	0.056/0.044	0.046/0.042
	AC	200 V	0.028/0.022	0.023/0.021
Holding current A	AC	100 V	0.028/0.022	0.023/0.021
	AC	200 V	0.014/0.011	
	DC	24 V	0.075	
Power consumption W ( ): With indicator	AC	100 V	1.8 / 1.4 (1.8 / 1.5)	1.6 / 1.3 (1.8 / 1.5)
	AC	200 V	1.8 / 1.4 (1.8 / 1.5)	1.6 / 1.3 (1.8 / 1.5)
	DC	24 V	1.8 (2.0)	
Thermal class			B (molded coil)	
Temperature rise °C			43	30

Reference: 100 VAC 50/60 Hz can be used with a rated voltage of 110 VAC 60 Hz and 200 VAC 50/60 Hz can be used with 220 VAC 60 Hz.

Individual specifications

1 MPa ≈ 145.0 psi, 1 MPa = 10 bar

Item			4KB1	4KB2	4KB3	4KB4
Min. working pressure MPa	2-position	Single	0.15	0.15	0.15	0.15
		Double		0.10	0.10	0.10
	3-position		0.20	0.20	0.20	0.20
Port size	A/B port		M5, Rc1/8, NPT1/8, G1/8 Push-in fitting ø6	Rc1/8, NPT1/8, G1/8 Rc1/4, NPT1/4, G1/4 Push-in fitting ø6, ø8	Rc1/4, NPT1/4, G1/4 Rc3/8, NPT3/8, G3/8 Push-in fitting ø8, ø10	Rc3/8, NPT3/8, G3/8 Rc1/2, NPT1/2, G1/2 Push-in fitting ø10, ø12
	P/R1/R2 port		Rc1/8, NPT1/8, G1/8	Rc1/4, NPT1/4, G1/4	Rc3/8, NPT3/8, G3/8	Rc1/2, NPT1/2, G1/2

Performance/characteristics by model

Item		4KB1	4KB2	4KB3	4KB4
Response time *1 ms	2-position	30 or less	30 or less	30 or less	30 or less
	3-position	60 or less	60 or less	60 or less	60 or less

*1: The response time is the value at 0.5 MPa working pressure, with no lubrication, and with the power ON. It depends on the pressure and the lubricant quality.

Weight

Item			4KB1	4KB2	4KB3	4KB4
Weight g (solenoid valve only)	2-position	Single	70	115	214	325
		Double	110	155	315	435
	3-position		120	170	354	505
Manifold base weight calculation formula (n: station No.) g			52.0xn+71.5	105.5xn+117	171.5xn+311	326.0xn+559.5

Flow characteristics

Model No.	Solenoid position		C[dm³/(s·bar)]	b
4KB1	2-position		0.71	0.25
	3-position	All ports closed	0.60	0.23
		A/B/R connection	0.81	0.25
		P/A/B connection	0.67	0.32
4KB2	2-position		2.1	0.13
	3-position	All ports closed	1.8	0.11
		A/B/R connection	2.0	0.17
		P/A/B connection	1.8	0.23
4KB3	2-position		4.5	0.11
	3-position	All ports closed	4.4	0.21
		A/B/R connection	4.8	0.18
		P/A/B connection	4.3	0.20
4KB4	2-position		8.9	0.22
	3-position	All ports closed	8.9	0.24
		A/B/R connection	9.4	0.23
		P/A/B connection	8.6	0.20

*1: Effective cross-sectional area S and sonic conductance C are converted as S ≈ 5.0 × C.

Ozone-proof specifications

(Ending Page 5)

** - Voltage - **P11**

Copper and PTFE free specifications

● Copper- and PTFE-based materials are not used in the flow path.

** - Voltage - **P6**

CE marking specifications

** - Voltage - **ST**

• Standard voltage of 24 VDC or less is CE marking-compatible even if the model No. is not indicated with "ST".

M4KB1 to 4 Series

Individual wiring manifold: sub-plate piping

How to order

● Single solenoid valve for manifold

4KB1 1 9 - 00 - M1 B ——— AC100V * Gasket/mounting screw included

(*6) (*7)

● Manifold

M 4KB2 1 0 - 06 - M1 B - 5 - AC100V - 2 2 0 0 0 1

Indicate the valve model based quantity display position when using a mix manifold. Refer to the following page.

Ⓐ Model No. Ⓑ Solenoid position Ⓒ Port size Ⓓ Manual override Ⓔ Electrical connections

* Refer to page 1263 for the circuit diagram with surge suppressor/lamp

Ⓕ Others Option Ⓖ Station No. Ⓗ Voltage

Ⓐ Model No.	4KB1	4KB2	4KB3	4KB4

	Code	Description	4KB1	4KB2	4KB3	4KB4
Ⓑ Solenoid position	1	2-position single	●	●	●	●
	2	2-position double	●	●	●	●
	3	3-position all ports closed	●	●	●	●
	4	3-position A/B/R connection	●	●	●	●
	5	3-position P/A/B connection	●	●	●	●
	8	Mix manifold (*1) (for multiple solenoid positions)	●	●	●	●

Ⓒ Port size	Port	Port A/B	Port P/R1/R2 (1) = Rc1/8 (2) = Rc1/4 (3) = Rc3/8 (4) = Rc1/2			
	M5	M5	(1)			
	06	Rc1/8	(1)	(2)		
	08	Rc1/4		(2)	(3)	
	10	Rc3/8			(3)	(4)
	15	Rc1/2				(4)
	M5Y	M5 (rear)	(1)			
	06Y	Rc1/8 (rear)		(2)		
	08Y	Rc1/4 (rear)			(3)	
	10Y	Rc3/8 (rear)				(4)
	H6	ø6 push-in fitting	(1)	(2)		
	H8	ø8 push-in fitting		(2)	(3)	
	H10	ø10 push-in fitting			(3)	(4)
	H12	ø12 push-in fitting				(4)
	M5CE	M5 (*2)	(1)			
	06CE	Rc1/8 (*2)	(1)			
	H6CE	ø6 push-in fitting (*2)	(1)			
	Port	Port A/B	Port P/R1/R2 (5) = NPT1/8 (6) = NPT1/4 (7) = NPT3/8 (8) = NPT1/2			
	M5N	M5	(5)			
	06N	NPT1/8	(5)	(6)		
	08N	NPT1/4		(6)	(7)	
	10N	NPT3/8			(7)	(8)
	15N	NPT1/2				(8)
	06YN	NPT1/8 (rear)		(6)		
	08YN	NPT1/4 (rear)			(7)	
	10YN	NPT3/8 (rear)				(8)
	Port	Port A/B	Port P/R1/R2 (9) = G1/8 (10) = G1/4 (11) = G3/8 (12) = G1/2			
	M5G	M5	(9)			
	06G	G1/8	(9)	(10)		
	08G	G1/4		(10)	(11)	
	10G	G3/8			(11)	(12)
	15G	G1/2				(12)
	06YG	G1/8 (rear)		(10)		
	08YG	G1/4 (rear)			(11)	
	10YG	G3/8 (rear)				(12)

Ⓓ						
	Blank	Non-locking manual override	●	●	●	●
	M1	Locking manual override	●	●	●	●

Ⓔ	Refer to the electrical connections list on the next page.

Ⓕ						
	Blank	No option	●	●	●	●
	K	External pilot (*3) (Compatible only when port size is Rc1/8)	●			
	S	Surge suppressor included (*5) (*8)	●	●	●	●
	-A	Coolant supported (packing: FKM)	●	●	●	●

Ⓖ						
	2 to 12	2 to 12 stations				●
	2 to 15	2 to 15 stations			●	
	2 to 20	2 to 20 stations	●	●		

Ⓗ Voltage						
Standard	AC100V	100 VAC 50/60 Hz	●	●	●	●
	AC200V	200 VAC 50/60 Hz	●	●	●	●
	DC24V	24 VDC	●	●	●	●
Option	DC12V	12 VDC	●	●	●	●
	AC110V	110 VAC 50/60 Hz	●	●	●	●
	AC220V	220 VAC 50/60 Hz	●	●	●	●

* Other made-to-order products				
AC24V	●	●	●	●
AC115V	●	●	●	●
AC120V	●	●	●	●

[Table 1] Compact terminal box L/LS compatibility table

Code	Description			4KB1	4KB2	4KB3	4KB4	Surge suppressor
L	Without lead wire	With indicator lamp	AC	●	●	●	●	
			DC			●	●	
		With surge suppressor and indicator lamp	AC					
			DC	●	●			Integrated
LS	Without lead wire	With surge suppressor and indicator lamp	AC	●	●	●	●	Integrated
			DC			●	●	Integrated

Precautions for model No. selection

*1: When the solenoid position is mixed (8), indicate the content of the combination at the end of the model No. Refer to the following page.

*2: When the CE code is added, the model will have a pilot common exhaust. (The max. station number is 10.)

*3: The max. station number for the external pilot (K) is 10. In addition, contact CKD for use with vacuum.

*4: The DC voltage models of the compact terminal box "L" of 4KB1, 4KB2 are equipped with a surge suppressor.

*5: The surge suppressor for attachment is a suppression connector when the grommet lead wire is 24 VDC or less. (Refer to page 1262.)

*6: With a single solenoid valve for CE type manifolds, the port size will be "00CE".

*7: With a discrete solenoid valve for 4KB1 rear piping manifolds, the port size will be "00Y".

*8: The surge suppressor can only be selected when the grommet lead wire or compact terminal box "B" has been selected for the electrical connections.

[Example of model No.]

M4KB210-06-M1B-2-AC100V

Ⓐ Model : M4KB2
Ⓑ Solenoid position : 2-position single
Ⓒ Port size : Rc1/8
Ⓓ Manual override : Locking manual override
Ⓔ Electrical connections : Compact terminal box/without lead wire
Ⓕ Other options : None
Ⓖ Station No. : 2 stations
Ⓗ Voltage : 100 VAC 50/60 Hz

[Electrical connection list]

Ⓔ Electrical connections	Code	Description	Ⓐ Model No. 4KB1	4KB2	4KB3	4KB4
	Grommet lead wire					
	Blank	Grommet lead wire (300 mm)	●	●	●	●
	Compact terminal box					
	B	Without lead wire	●	●	●	●
	L	Without lead wire	Refer to [Table 1] on the previous page for details (*4)			
	LS	Without lead wire, with surge suppressor/lamp				
	C-connector (lead wire lateral direction)					
	C	Lead wire length (300 mm)	●	●	●	●
	C00	Lead wire length (500 mm)	●	●	●	●
	C01	Lead wire length (1000 mm)	●	●	●	●
	C02	Lead wire length (2000 mm)	●	●	●	●
	C03	Lead wire length (3000 mm)	●	●	●	●
	C1	Without lead wire	●	●	●	●
	C2	Lead wire length (300 mm) with surge suppressor/lamp	●	●	●	●
	C20	Lead wire length (500 mm) with surge suppressor/lamp	●	●	●	●
	C21	Lead wire length (1000 mm) with surge suppressor/lamp	●	●	●	●
	C22	Lead wire length (2000 mm) with surge suppressor/lamp	●	●	●	●
	C23	Lead wire length (3000 mm) with surge suppressor/lamp	●	●	●	●
	C3	Without lead wire, with surge suppressor/lamp	●	●	●	●
	D-connector (lead wire upward direction)					
	D	Lead wire length (300 mm)	●	●	●	●
	D00	Lead wire length (500 mm)	●	●	●	●
	D01	Lead wire length (1000 mm)	●	●	●	●
	D02	Lead wire length (2000 mm)	●	●	●	●
	D03	Lead wire length (3000 mm)	●	●	●	●
	D1	Without lead wire	●	●	●	●
	D2	Lead wire length (300 mm) with surge suppressor/lamp	●	●	●	●
	D20	Lead wire length (500 mm) with surge suppressor/lamp	●	●	●	●
	D21	Lead wire length (1000 mm) with surge suppressor/lamp	●	●	●	●
	D22	Lead wire length (2000 mm) with surge suppressor/lamp	●	●	●	●
	D23	Lead wire length (3000 mm) with surge suppressor/lamp	●	●	●	●
	D3	Without lead wire, with surge suppressor/lamp	●	●	●	●

How to order masking plate kit

M **4KB180** **- MP-KIT** * Gasket/mounting screw attached

Ⓐ Model No.

Ⓐ Model No.
4KB180
4KB280
4KB380
4KB480

How to order mix manifold

· 5-port valve

M **4KB3** **8** **0** **-** **08** **-** **7** **-** **AC100V** **-**

S1	S2	S3	S4	S5	MP
2	2	2	1	0	0

S1=1, 6 S2=2, 5 S3=3, 4 S4=7

Mix manifold "8"

* For How to order other items, refer to the previous page.

How to fill in form for ordering a mix manifold | Manifold specifications sheet (page 1328)

(1) List the quantity for each function (solenoid position) at the end of How to order. The functions and codes are as shown below.

-

S1	S2	S3	S4	S5	MP
2	2	2	1	0	0

List the quantity

Example: 2-position single → S1

Code	Function (solenoid position)
S1	2-position single
S2	2-position double
S3	3-position all ports closed
S4	3-position A/B/R connection
S5	3-position P/A/B connection
MP	Masking plate

● With a mix manifold, when using 10 or more actuators of the same model No., specify using the codes in the table below.

Actuator quantity	10	11	12	13	14	15	16	17	18	19
Code	A	B	C	D	E	F	G	H	I	J

(2) List the function (solenoid position) and layout position in the field for remarks.

Solenoid position code = ○, ○th station (where the left side is the 1st station when the piping port is facing forward.)

Example: S1 = 1, 6 (1st, 6th stations are 5 port valve 2-position single)

[Example of model No.]

For 7 stations

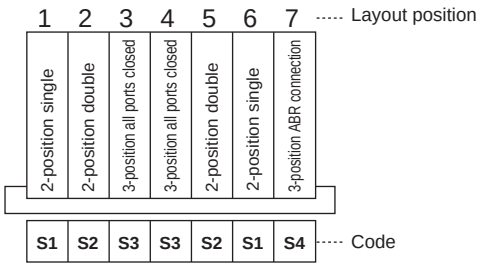

2-position single (S1) : 2 units (1st station, 6th station)
2-position double (S2) : 2 units (2nd station, 5th station)
3-position all ports closed (S3) : 2 units (3rd station, 4th station)
3-position ABR connection (S4) : 1 unit (7th station)

M4KB380-08-7-AC100V **-**

S1	S2	S3	S4	S5	MP
2	2	2	1	0	0

S1=1, 6 S2=2, 5 S3=3, 4 S4=7

Manifold components explanation and parts list

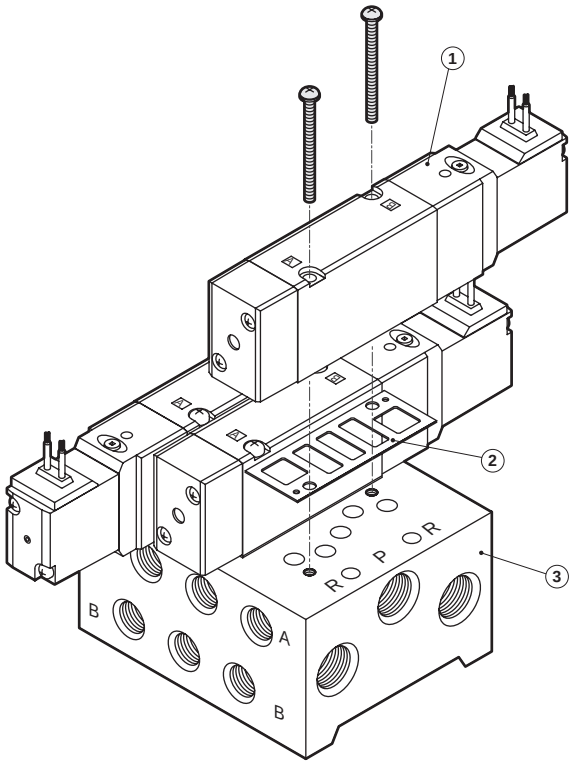

Main parts list

No.	Component name	Model No. (example)	Content
1	Single solenoid valve	4KB□□9-00-□□□-□ └Voltage └Option └Electrical connections └Manual override └Solenoid position └Series flow rate size	Single solenoid valve Mounting screws x 2 Gasket
2	Gasket kit	M4KB□□0-GASKET-KIT	Gasket Mounting screws x 2
3	Manifold sub-plate kit	M4KB□10-□-□-SUB-BASE-KIT └Station No. └Port size └Series flow rate size	Manifold sub-plate Mounting screws x 2 x station No. Gasket x station No.

Repair parts list

No.	Part name	Model No.	Compatibility
-	Coil assembly	4K1L-□-COIL-□ Electrical connections / voltage	4KB1 4KB2
		4K3-□-COIL-□ Electrical connections / Voltage	4KB3 4KB4
-	Spool assembly	4K9-□110	4KB110
		118	4KB120
		111	4KB130
		112	4KB140
		113	4KB150
		150	4KB210
		126	4KB220
		127	4KB230
		128	4KB240
		129	4KB250
		133	4KB310, 4KB320
		134	4KB330
		135	4KB340
		136	4KB350
		140	4KB410, 4KB420
		141	4KB430
		142	4KB440
		143	4KB450

No.	Part name	Model No.	Compatibility
-	Piston assembly	4K9-□151	4KB110 4KB120
		152	4KB130 4KB140 4KB150
		153	4KB210 4KB220
		154	4KB230 4KB240 4KB250
		137	4KB310, 4KB320
		138	4KB330 4KB340 4KB350
		144	4KB410, 4KB420
		145	4KB430 4KB440 4KB450

Dimensions CAD

M4KB1-M5, M5N, M5G

● Port size M5: grommet lead wire

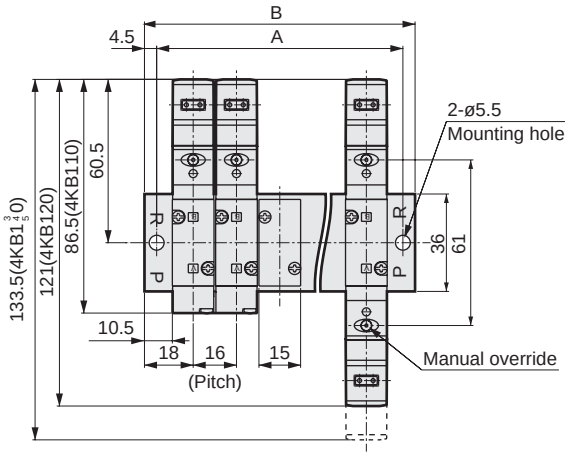

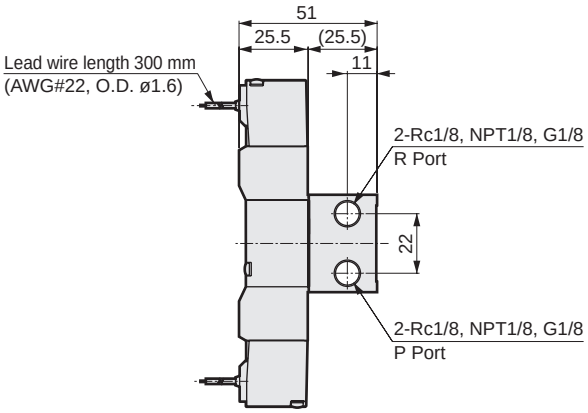

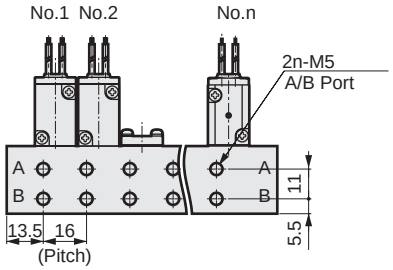

■ Single model No. for manifold
4KB1*9-00-option**-**voltage

Station No.	2	3	4	5	6	7	8	9	10	11	12	13	14	15	16	17	18	19	20
A	43	59	75	91	107	123	139	155	171	187	203	219	235	251	267	283	299	315	331
B	52	68	84	100	116	132	148	164	180	196	212	228	244	260	276	292	308	324	340

M4KB1-06, 06N, 06G

● Port size Rc1/8, NPT1/8, G1/8: grommet lead wire

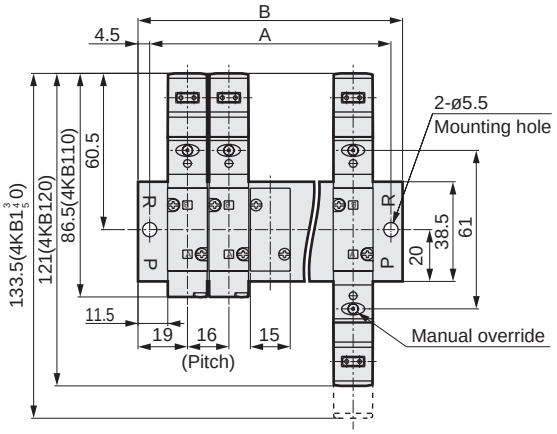

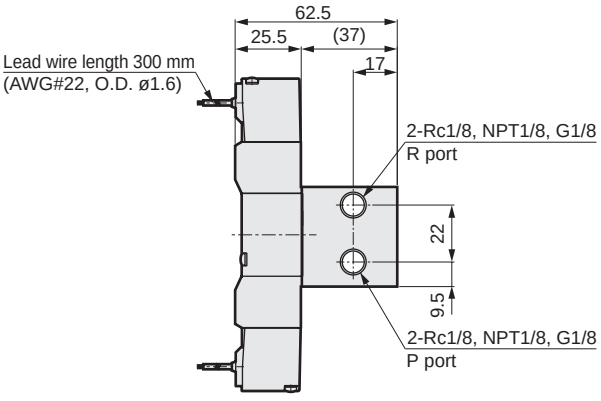

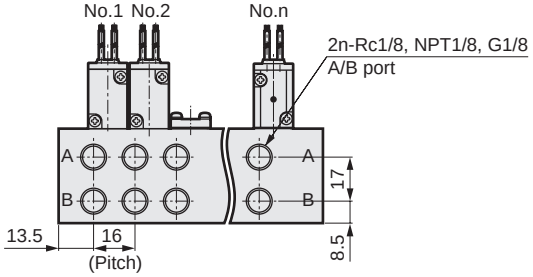

■ Single model No. for manifold
4KB1*9-00-option**-**voltage

Station No.	2	3	4	5	6	7	8	9	10	11	12	13	14	15	16	17	18	19	20
A	45	61	77	93	109	125	141	157	173	189	205	221	237	253	269	285	301	317	333
B	54	70	86	102	118	134	150	166	182	198	214	230	246	262	278	294	310	326	342

Dimensions

[For port size M5, M5N, M5G]

● Compact terminal box: (B/L/LS)

Without indicator lamp

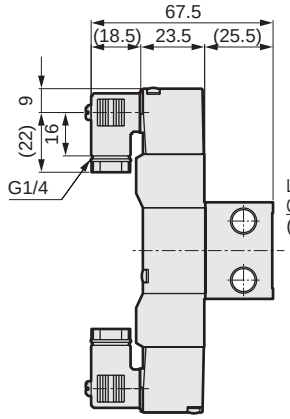

With indicator lamp

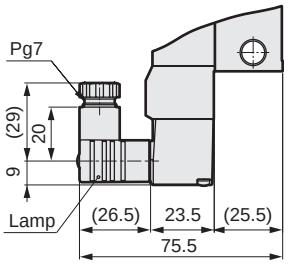

● C-connector: (C/C1/C0*/C2/C2*/C3)

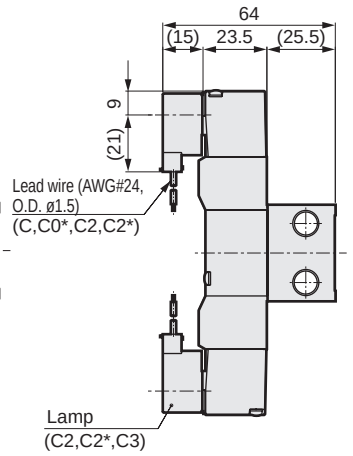

● D-connector: (D/D1/D0*/D2/D2*/D3)

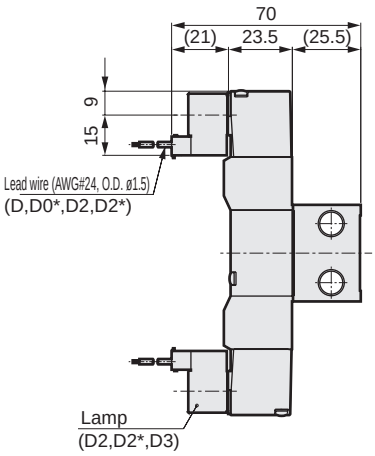

[For port size Rc1/8, NPT1/8, G1/8]

● Compact terminal box: (B/L/LS)

Without indicator lamp

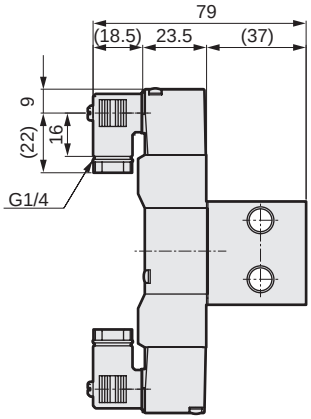

With indicator lamp

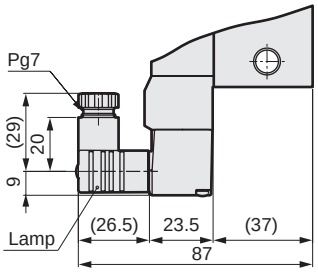

● C-connector: (C/C1/C0*/C2/C2*/C3)

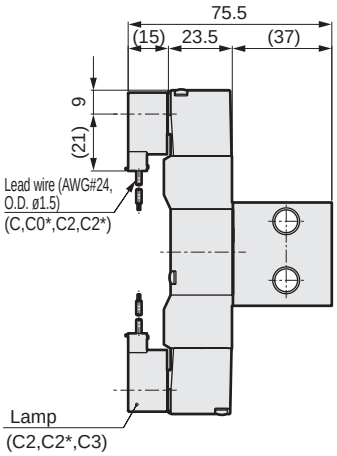

● D-connector: (D/D1/D0*/D2/D2*/D3)

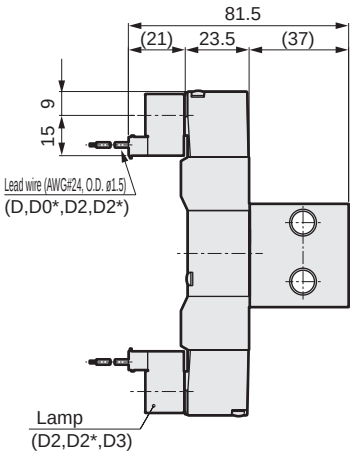

● External pilot: (K)
(Port size Rc1/8, NPT1/8, G1/8, station No. 10 stations or less)

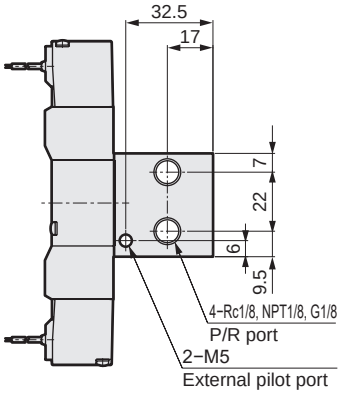

Dimensions CAD

M4KB1-H6

● Port size ø6 push-in fitting: grommet lead wire

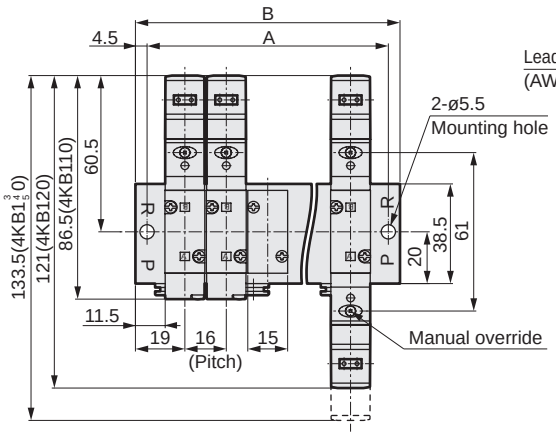

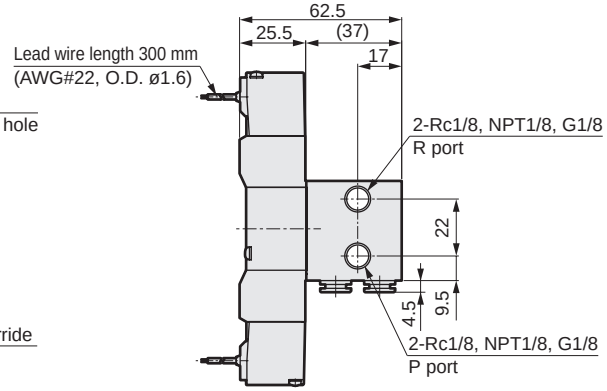

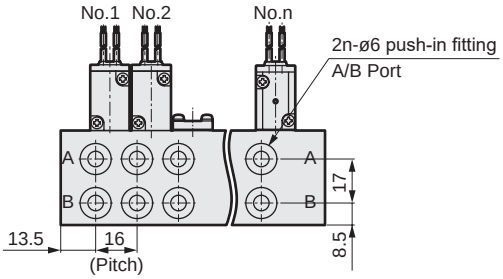

■ Single model No. for manifold
4KB1*9-00-option**-**voltage

Station No.	2	3	4	5	6	7	8	9	10	11	12	13	14	15	16	17	18	19	20
A	45	61	77	93	109	125	141	157	173	189	205	221	237	253	269	285	301	317	333
B	54	70	86	102	118	134	150	166	182	198	214	230	246	262	278	294	310	326	342

M4KB1-M5Y, M5YN, M5YG

● Port size M5 (rear piping): grommet lead wire

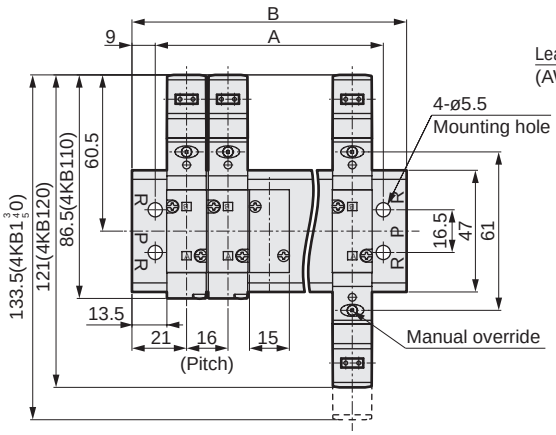

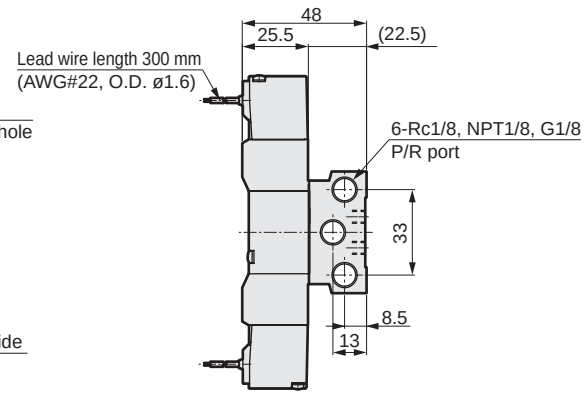

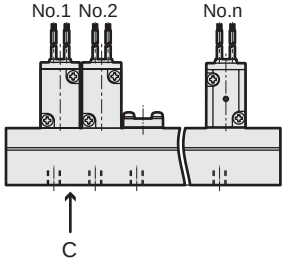

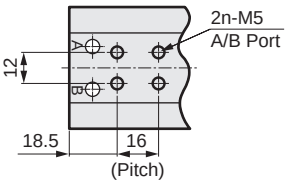

C arrow view

■ Single model No. for manifold
4KB1*9-00Y-option**-**voltage

Station No.	2	3	4	5	6	7	8	9	10	11	12	13	14	15	16	17	18	19	20
A	40	56	72	88	104	120	136	152	168	184	200	216	232	248	264	280	296	312	328
B	58	74	90	106	122	138	154	170	186	202	218	234	250	266	282	298	314	330	346

Dimensions

(With port size ø6 push-in fitting)

● Compact terminal box: (B/L/LS)

Without indicator lamp

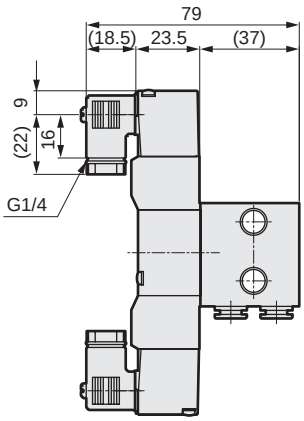

With indicator lamp

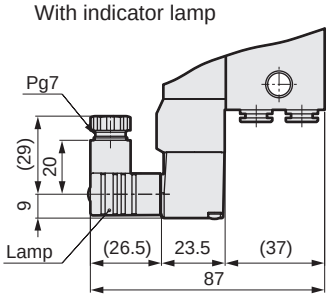

● C-connector:
(C/C1/C0*/C2/C2*/C3)

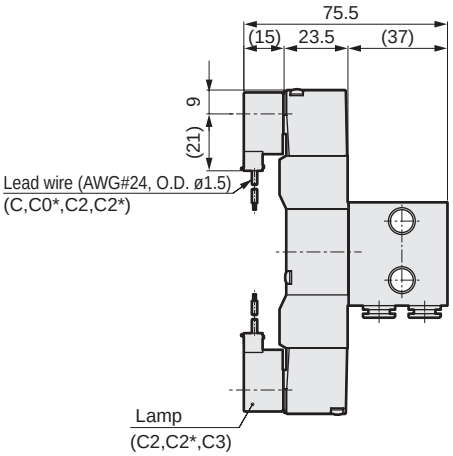

● D-connector:
(D/D1/D0*/D2/D2*/D3)

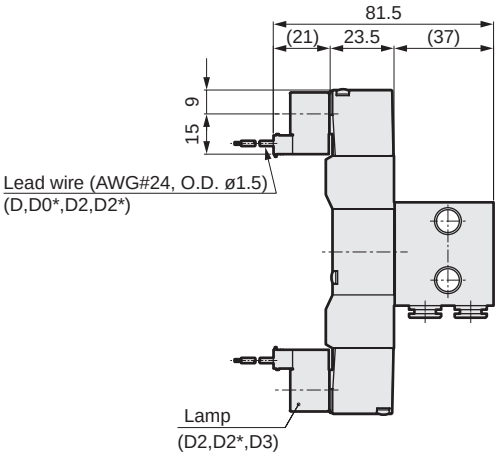

[When port size is M5 (rear piping)]

● Compact terminal box: (B/L/LS)

Without indicator lamp

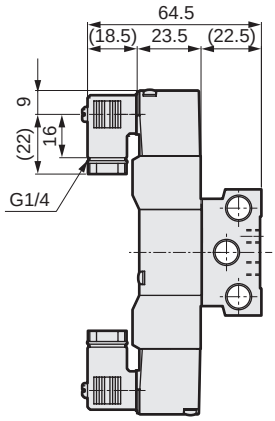

With indicator lamp

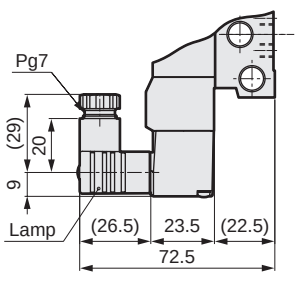

● C-connector:
(C/C1/C0*/C2/C2*/C3)

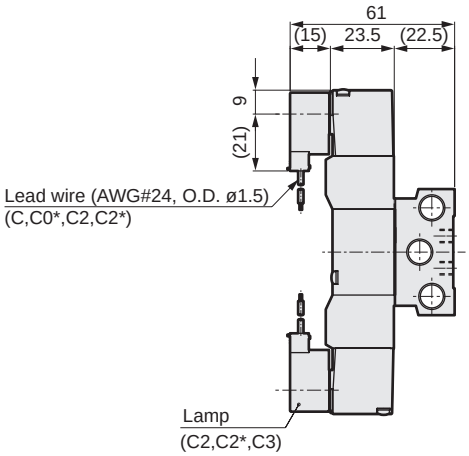

● D-connector:
(D/D1/D0*/D2/D2*/D3)

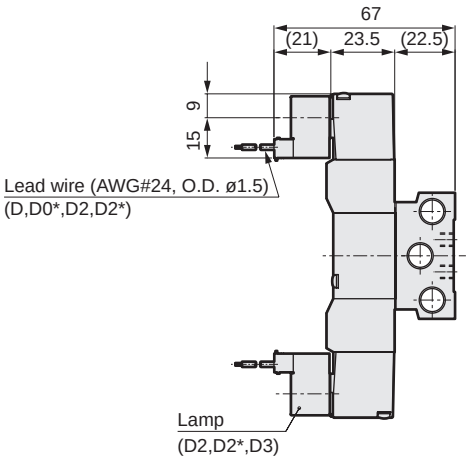

Dimensions CAD

M4KB1-M5CE

● Port size M5/pilot common exhaust: grommet lead wire

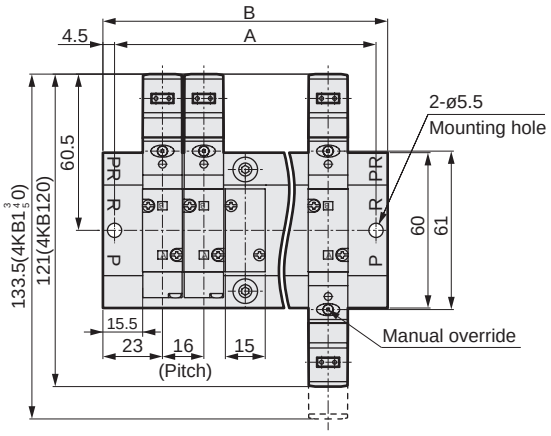

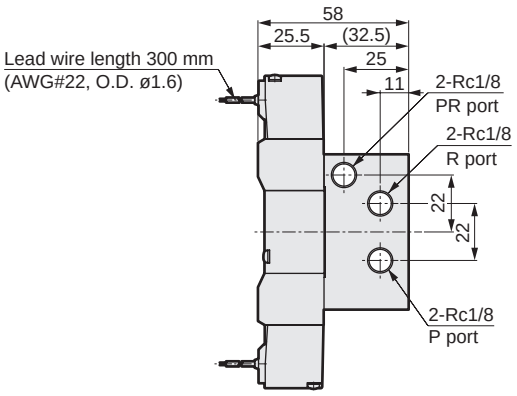

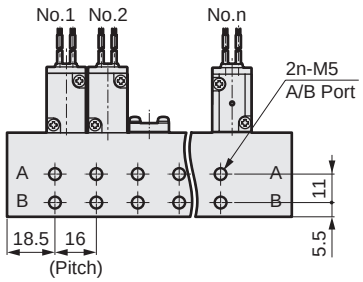

■ Single model No. for manifold
4KB1*9-00CE-option**-**voltage

M4KB1-06CE

● Port size Rc1/8, pilot common exhaust: grommet lead wire

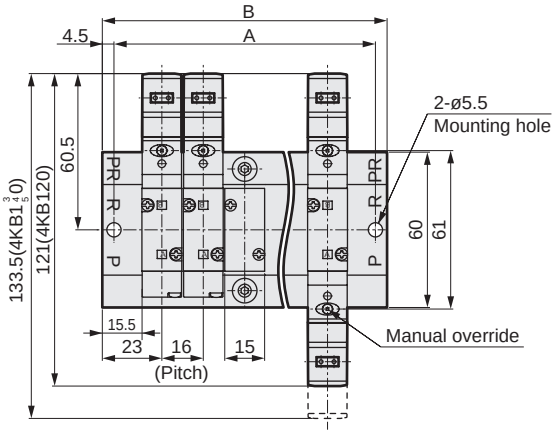

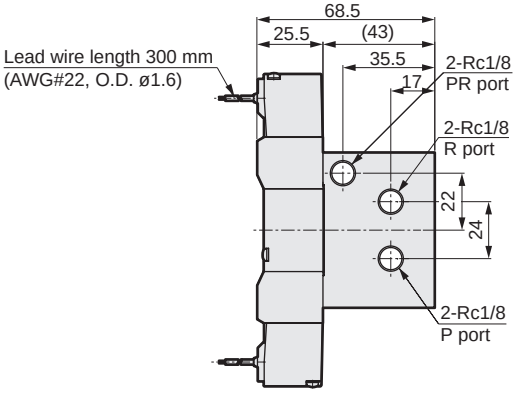

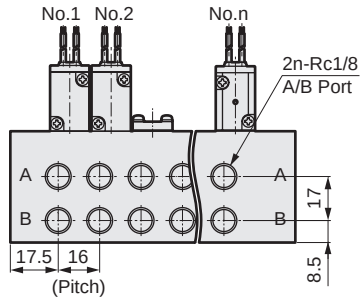

■ Single model No. for manifold
4KB1*9-00CE-option **-** voltage

Station No.	2	3	4	5	6	7	8	9	10
A	53	69	85	101	117	133	149	165	181
B	62	78	94	110	126	142	158	174	190

Dimensions

M4KB1-H6CE

● Port size ø6 push-in fitting/pilot common exhaust: grommet lead wire

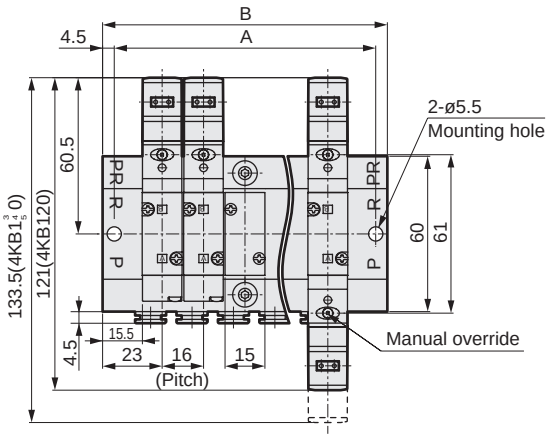

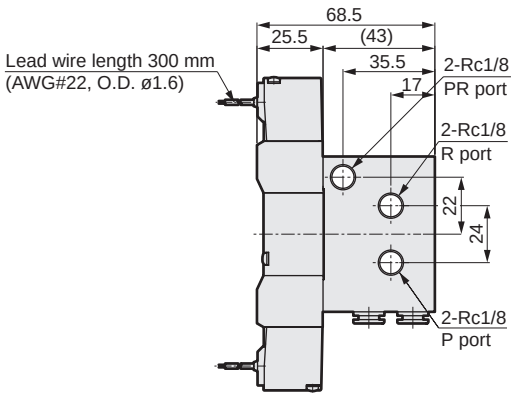

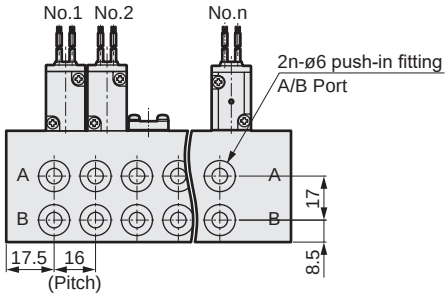

■ Single model No. for manifold
4KB1*9-00CE-option **-** voltage

Station No.	2	3	4	5	6	7	8	9	10
A	53	69	85	101	117	133	149	165	181
B	62	78	94	110	126	142	158	174	190

Dimensions CAD

M4KB2-06/08, 06N/08N, 06N/06G

● Port size Rc1/8/Rc1/4, NPT1/8/NPT1/4, G1/8/G1/4: grommet lead wire

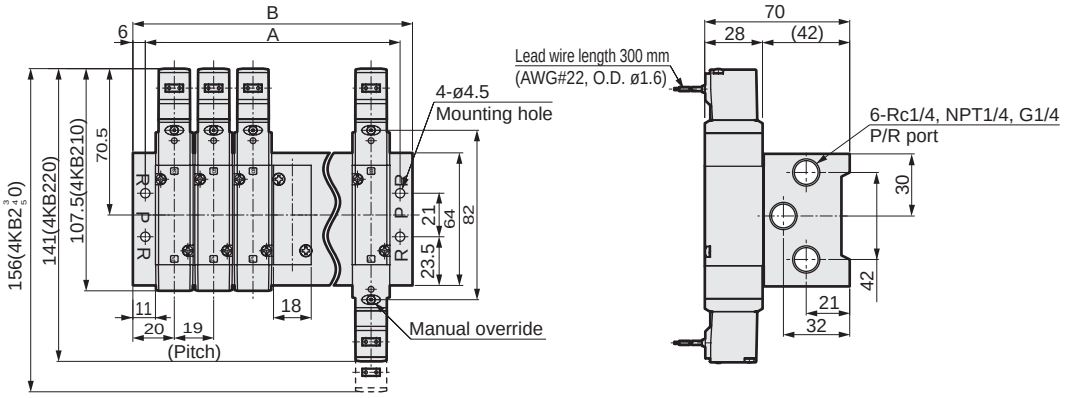

M4KB2-08, 08N, 08G

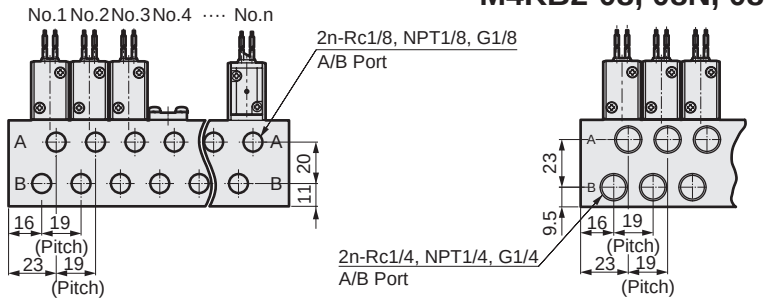

■ Single model No. for manifold
4KB2*9-00-option **-** voltage

M4KB2-06Y, 06YN, 06YG

● Port size Rc1/8, NPT1/8, G1/8 (rear piping): grommet lead wire

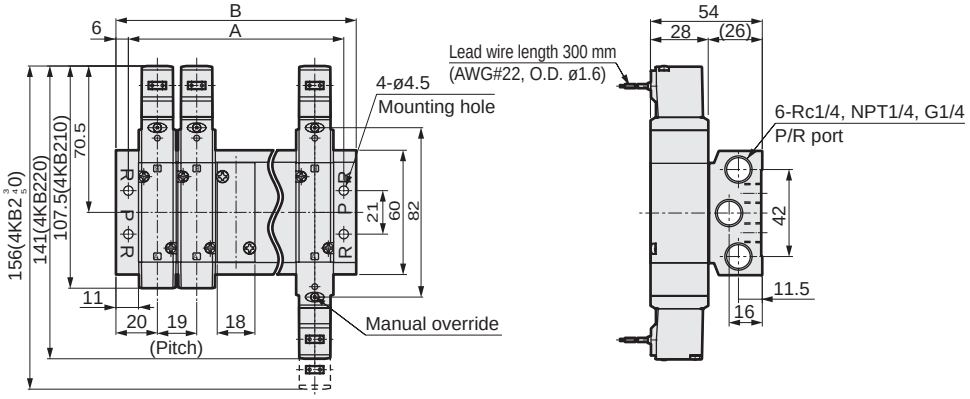

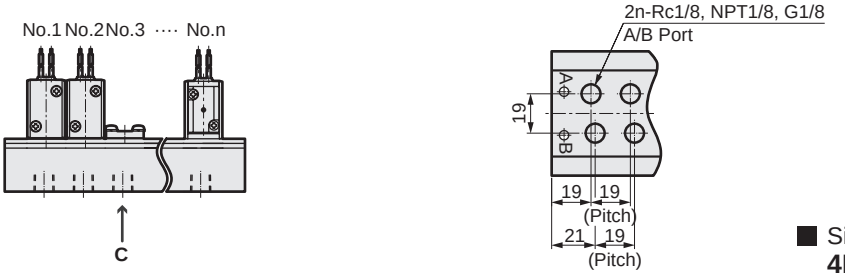

C arrow view

■ Single model No. for manifold
4KB2*9-00-option **-** voltage

Station No.	2	3	4	5	6	7	8	9	10	11	12	13	14	15	16	17	18	19	20
A	47	66	85	104	123	142	161	180	199	218	237	256	275	294	313	332	351	370	389
B	59	78	97	116	135	154	173	192	211	230	249	268	287	306	325	344	363	382	401

Dimensions

● ø6/ø8 push-in fitting: (H6/H8)

● Compact terminal box: (B/L/LS)

● C-connector: (C/C1/C0*/C2/C2*/C3)

● D-connector: (D/D1/D0*/D2/D2*/D3)

ø6

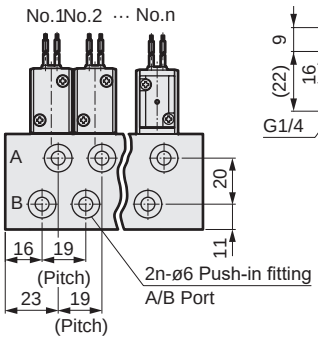

Without indicator lamp

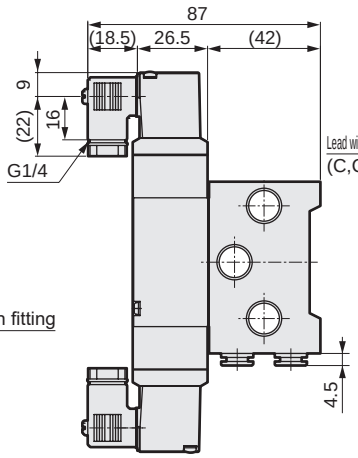

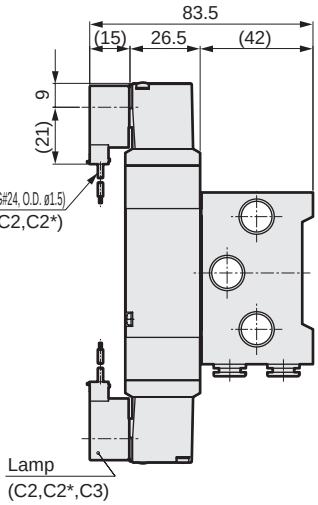

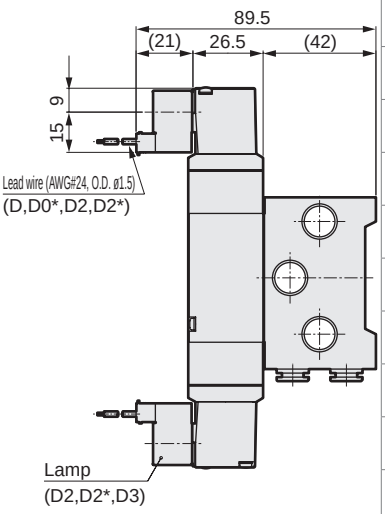

ø8

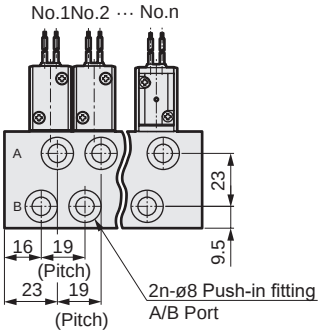

With indicator lamp

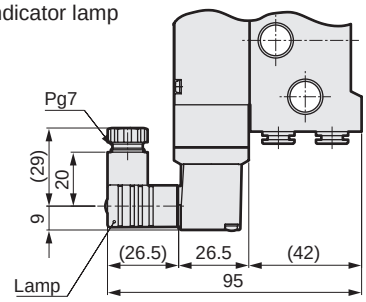

● Port size Rc1/8 (rear piping)

Without indicator lamp

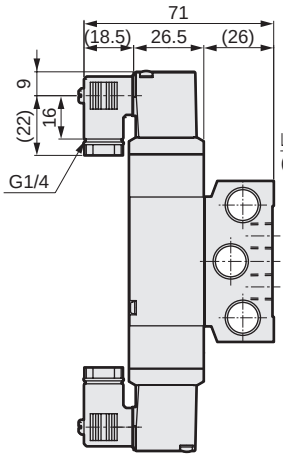

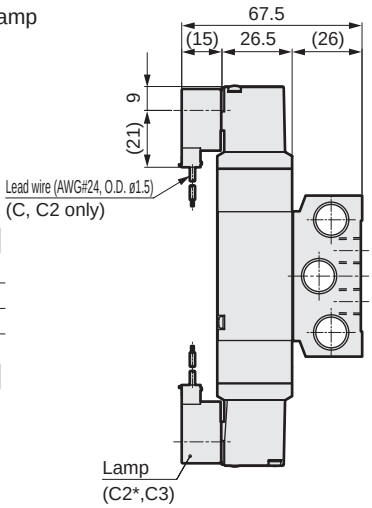

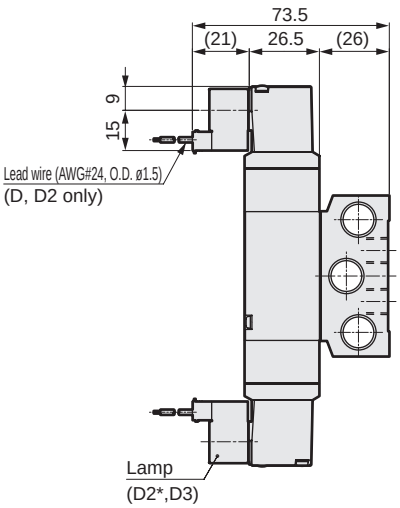

With indicator lamp

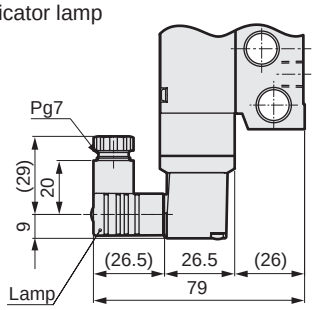

Dimensions CAD

M4KB3-08/10, 08N/10N, 08G/10G

● Port size Rc1/4/Rc3/8, NPT1/4/NPT3/8, G1/4/G3/8: grommet lead wire

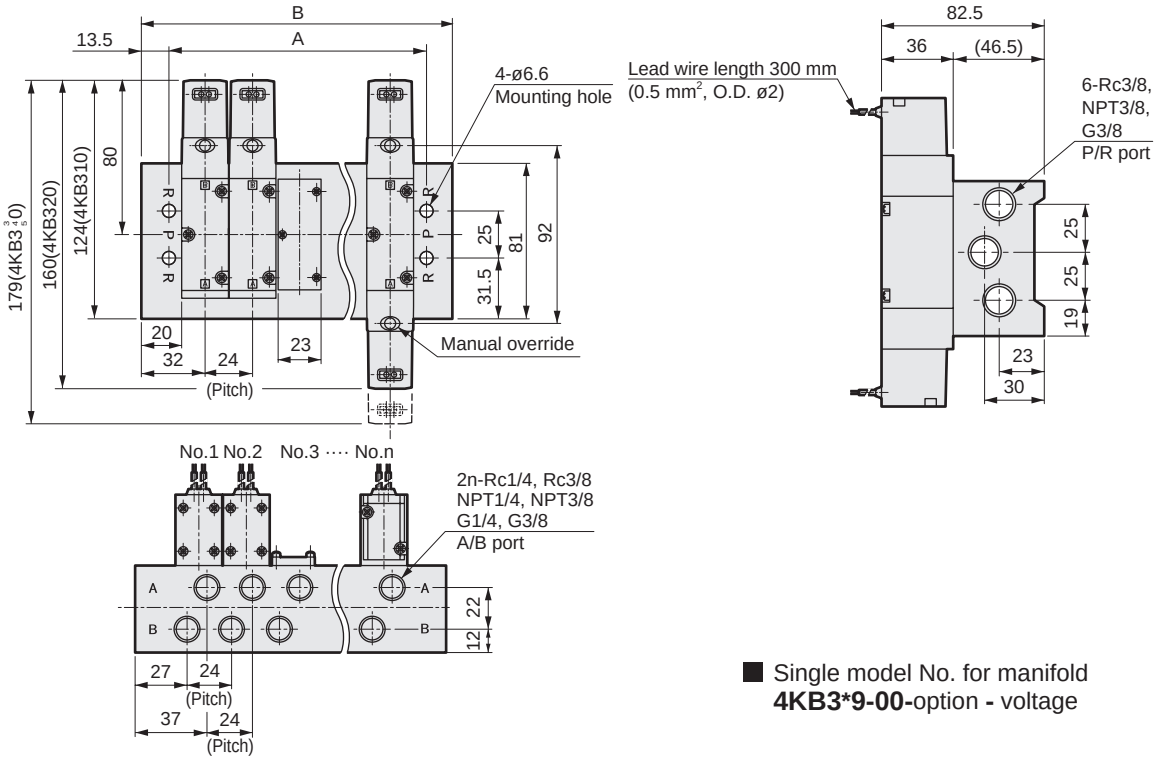

■ Single model No. for manifold
4KB3*9-00-option **-** voltage

Station No.	2	3	4	5	6	7	8	9	10	11	12	13	14	15
A	61	85	109	133	157	181	205	229	253	277	301	325	349	373
B	88	112	136	160	184	208	232	256	280	304	328	352	376	400

M4KB3-08Y, 08YN, 08YG

● Port size Rc1/4, NPT1/4, G1/4 (rear piping): grommet lead wire

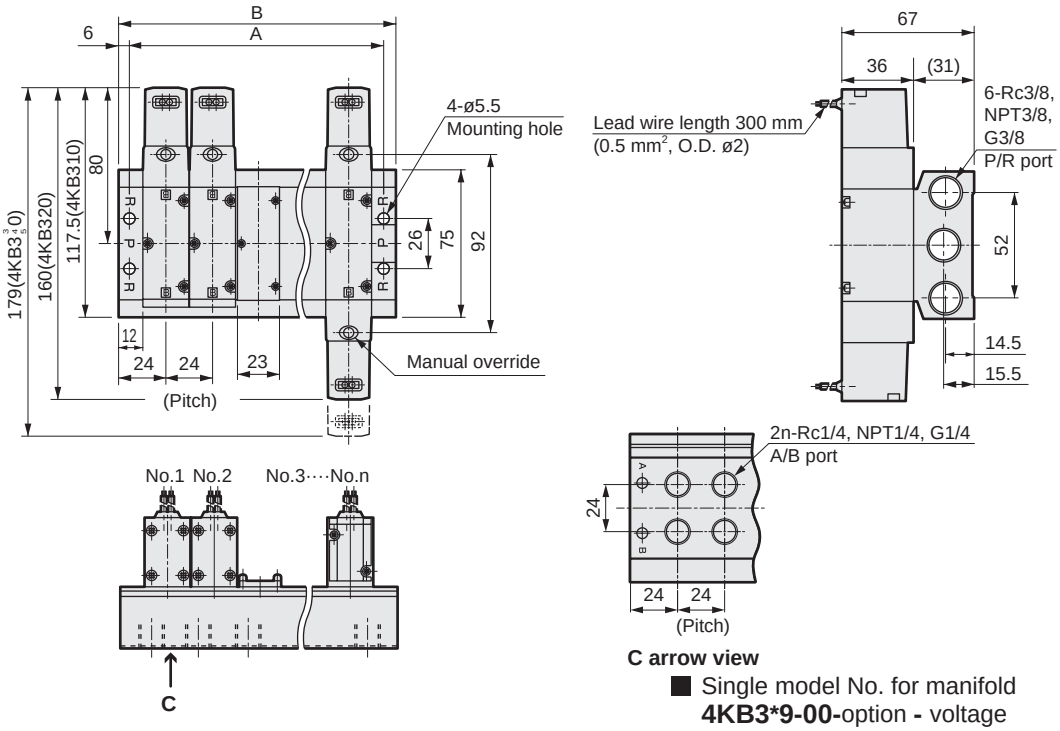

■ Single model No. for manifold
4KB3*9-00-option **-** voltage

Station No.	2	3	4	5	6	7	8	9	10	11	12	13	14	15
A	60	84	108	132	156	180	204	228	252	276	300	324	348	372
B	72	96	120	144	168	192	216	240	264	288	312	336	360	384

Dimensions

● ø8/ø10 push-in fitting: (H8/H10)

● Terminal box: (B/L/LS)

● C-connector: (C/C1/C0*/C2/C2*/C3)

● D-connector: (D/D1/D0*/D2/D2*/D3)

ø8

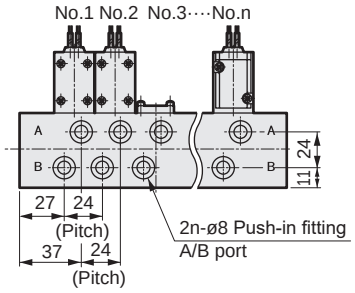

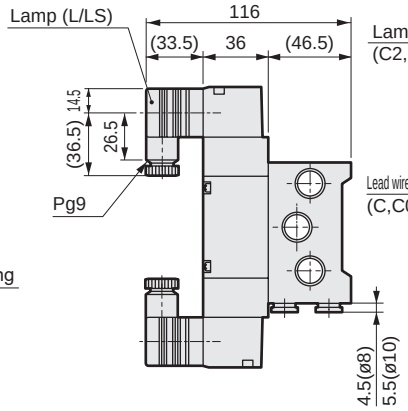

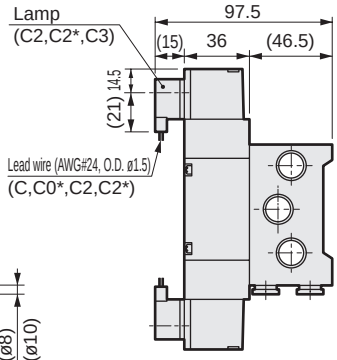

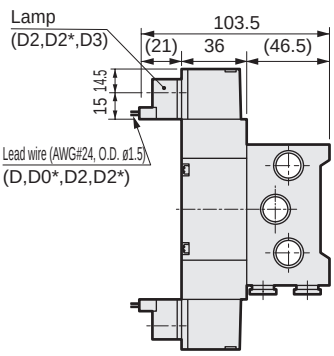

ø10

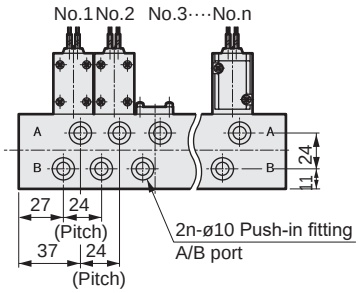

● Port size Rc1/4 (rear piping)

● Terminal box: (B/L/LS)

● C-connector: (C/C1/C0*/C2/C2*/C3)

● D-connector: (D/D1/D0*/D2/D2*/D3)

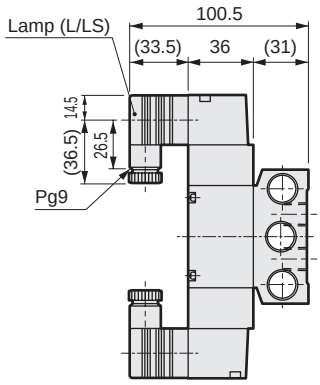

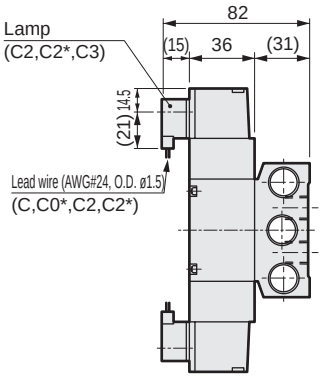

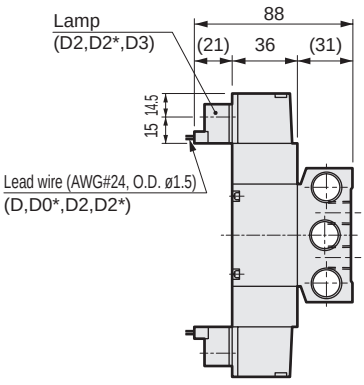

Dimensions CAD

M4KB4-10/15, 10N/15N, 10G/15G

● Port size Rc3/8/Rc1/2, NPT3/8/NPT1/2, G3/8/G1/2: grommet lead wire

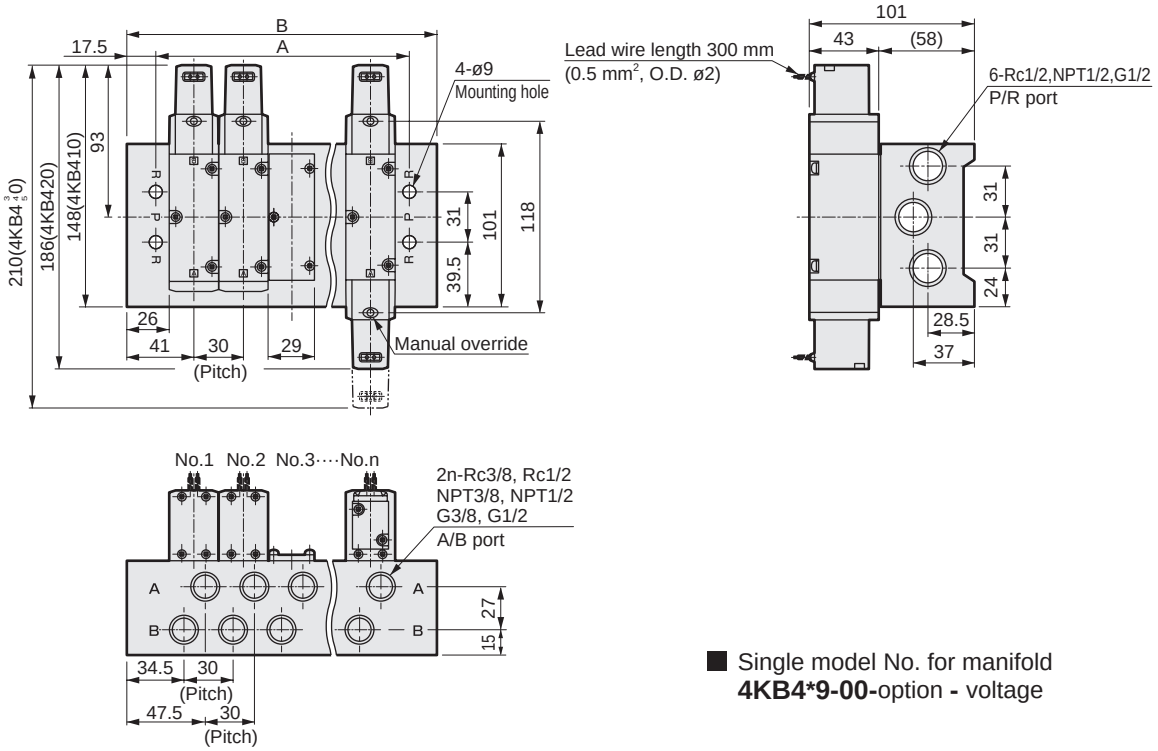

■ Single model No. for manifold
4KB4*9-00-option **-** voltage

Station No.	2	3	4	5	6	7	8	9	10	11	12
A	77	107	137	167	197	227	257	287	317	347	377
B	112	142	172	202	232	262	292	322	352	382	412

M4KB4-10Y, 10YN, 10YG

● Port size Rc3/8, NPT3/8, G3/8 (rear piping): grommet lead wire

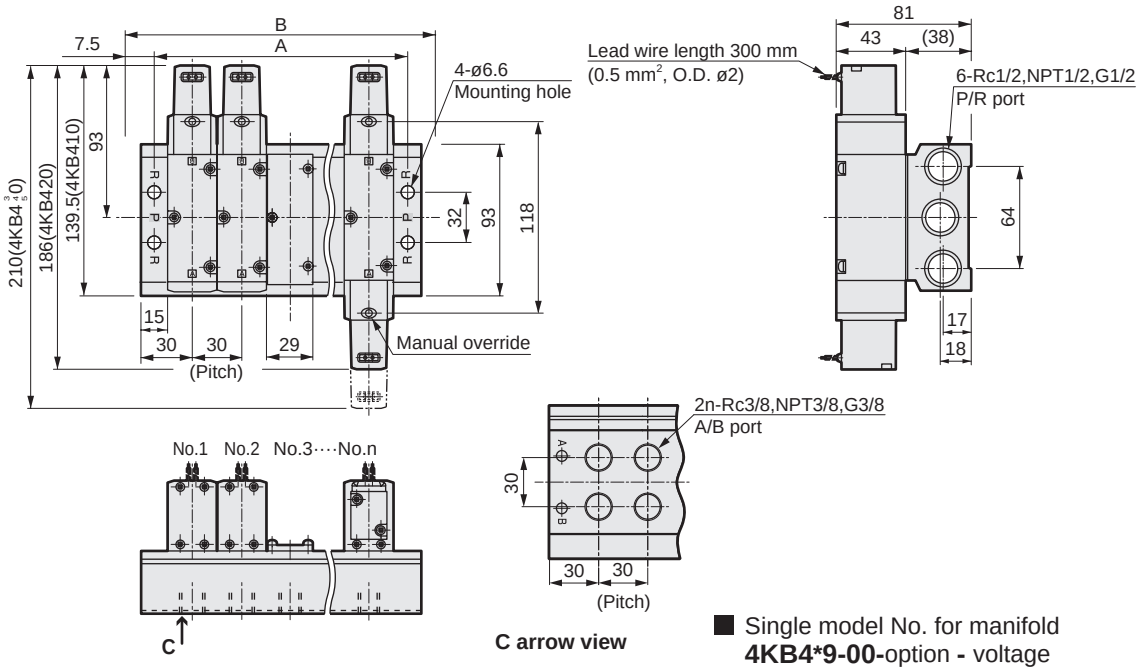

■ Single model No. for manifold
4KB4*9-00-option **-** voltage

Station No.	2	3	4	5	6	7	8	9	10	11	12
A	75	105	135	165	195	225	255	285	315	345	375
B	90	120	150	180	210	240	270	300	330	360	390

Dimensions

● ø10/ø12 push-in fitting: (H10/H12)

ø10

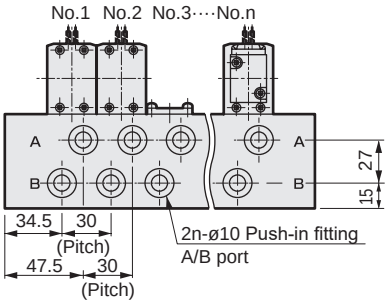

ø12

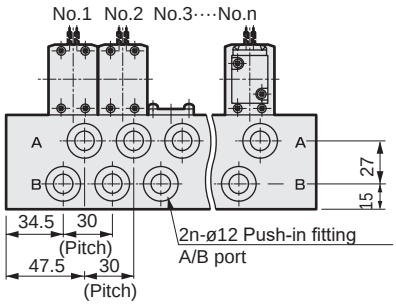

● Terminal box: (B/L/LS)

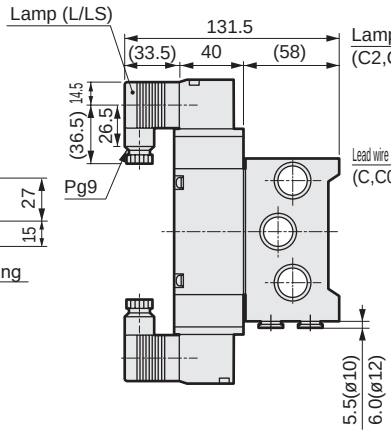

● C-connector: (C/C1/C0*/C2/C2*/C3)

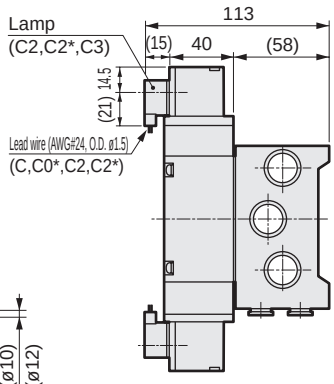

● D-connector: (D/D1/D0*/D2/D2*/D3)

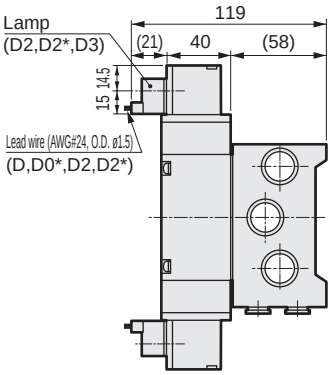

● Port size Rc3/8 (rear piping)

● Terminal box: (B/L/LS)

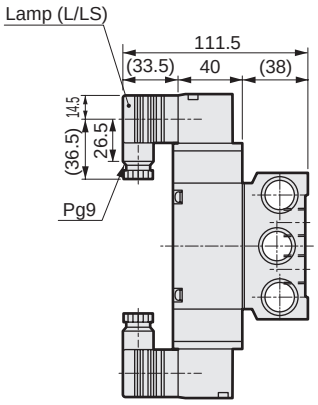

● C-connector: (C/C1/C0*/C2/C2*/C3)

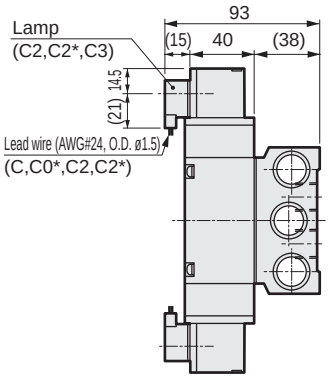

● D-connector: (D/D1/D0*/D2/D2*/D3)

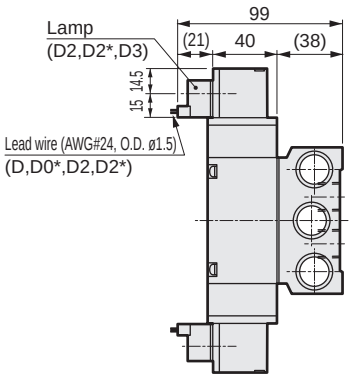

4GA/B
M4GA/B
MN4GA/B
4GA/B (master)
4GB With sensor
4GD/E
M4GD/E
MN4GD/E
4GA4/B4
MN3E MN4E
W4GA/B2
W4GB4
MN3S0 MN4S0
4SA/B0
4KA/B
4KA/B (master)
4F
4F (master)
PV5G GMF
PV5 GMF
PV5S-0
3Q
MV3QR
3MA/B0
3PA/B
P/M/B
NP/NAP NVP
4G*0EJ
4F*0EX
4F*0E
HMV HSV
2QV 3QV
SKH
Silencer
TotAirSys (Total Air)
TotAirSys (Gamma)
Ending

M4K A/B 1 to 4 Manifold specifications sheet

Issued / /

Company

Contact

Order No.

● Contact ● Quantity Set ● Delivery date /

Slip No.	Order No.

● Manifold model No.

M4K □ □ □ 0 - □ - □ □ □ - □ - □

A/B 1 2 3 4

B Solenoid position

C Port size (A/B port)

D Manual position

E Electrical connections

F Other options

G Station No.

H Voltage

		Installation position No.																									Quantity
Code	Model No.	1	2	3	4	5	6	7	8	9	10	11	12	13	14	15	16	17	18	19	20	21	22	23	24	25	
S1	4K □ 219																										
S2	4K □ 229																										
S3	4K □ 239																										
S4	4K □ 249																										
S5	4K □ 259																										
MP	Masking plate																										

MN4KB

Pneumatic valve/block manifold

Pilot operated 5-port valve

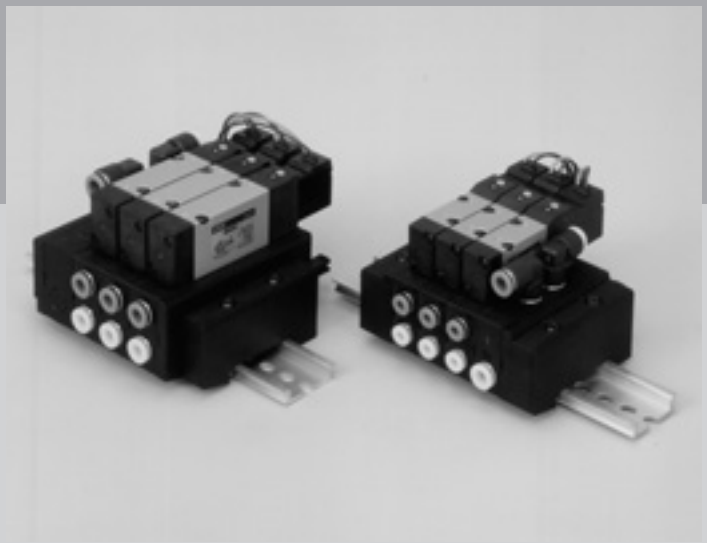

CONTENTS

Series variation 1260
Electrical connections list (wire connections/circuit) 1262

Block manifold

● Sub-plate piping (MN4KB1/2) 1330

Technical data
(1) How to assemble/disassemble block manifold 1342
Block components 1336
Block manifold specifications sheets 1344
⚠ Safety precautions 1363

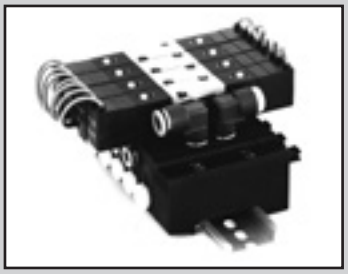

Block manifold sub-plate piping
Pilot operated 5-port pneumatic valve

MN4KB1/2 Series

● Cylinder bore size: ø20 to ø80

CE Refer to the Ending for details.

RoHS CAD

JIS symbol

● 5-port valve
2-position single

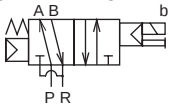

● 5-port valve
2-position double

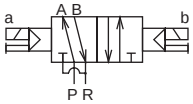

● 5-port valve
3-position all ports closed

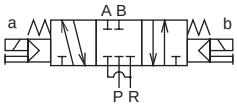

● 5-port valve
3-position A/B/R connection

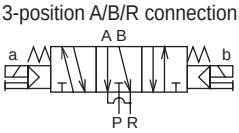

● 5-port valve
3-position P/A/B connection

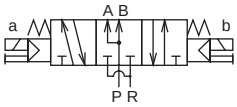

Common specifications

Item	Description
Manifold method	Block manifold system (DIN rail mount)
Manifold (*1)	Common air supply (P) Common exhaust (R)
Station No.	2 to 25 stations
Valve and operation	Pilot operated soft spool valve
Working fluid	Compressed air
Max. working pressure MPa	0.70 (≈100 psi, 7 bar)
Min. working pressure MPa	Refer to Individual specifications listed below
Proof pressure MPa	1.05 (≈150 psi, 10.5 bar)
Ambient temperature °C	5 (41°F) to 50 (122°F)
Fluid temperature °C	5 (41°F) to 50 (122°F)
Lubrication	Not required
Degree of protection	Dust-proof
Vibration resistance m/s^2	50 or less
Shock resistance m/s^2	300 or less
Atmosphere	Cannot be used in corrosive gas environment.

*1: Configured with a pilot common exhaust. (However, with the exception of the pilot exhaust for 3-position.)

Electrical specifications

Item			4KB1/2
Rated voltage V	AC		100,200 (50 / 60 Hz)
	DC		24
Voltage fluctuation range			±10%
Starting current A	AC	100 V	0.056/0.044
	AC	200 V	0.028/0.022
Holding current A	AC	100 V	0.028/0.022
	AC	200 V	0.014/0.011
	DC	24 V	0.075
Power consumption W	AC	100 V	1.8 / 1.4 (1.8 / 1.5)
	AC	200 V	1.8 / 1.4 (1.8 / 1.5)
( ): With indicator	DC	24 V	1.8 (2.0)
Thermal class			B (molded coil)
Temperature rise °C			43

Reference: Rated 100 VAC 50/60 Hz can be used with 110 VAC 60 Hz and 200 VAC 50/60 Hz can be used with 220 VAC 60 Hz.

Individual specifications

Item			4KB1	4KB2
Min. working pressure MPa	2-position	Single	0.15 (≈22 psi, 1.5 bar)	0.15 (≈22 psi, 1.5 bar)
		Double		0.10 (≈15 psi, 1 bar)
	3-position	All ports closed	0.20 (≈29 psi, 2 bar)	0.20 (≈29 psi, 2 bar)
		A/B/R connection		
		P/A/B connection		
Port size	Cylinder port A/B		ø4/ø6/ø8 Push-in fitting	ø6/ø8/ø10 Push-in fitting
	Supply/exhaust port P/R		ø6/ø8 Push-in fitting	ø8/ø10/ø12 Push-in fitting
	Pilot exhaust port PR		ø6/ø8 Push-in fitting	-

Performance/characteristics by model

Item		4KB1	4KB2
Response time (*1) ms	2-position	30 or less	30 or less
	3-position	60 or less	60 or less

*1: The response time is the value at 0.5 MPa working pressure, with no lubrication, and with the power ON. It depends on the pressure and the lubricant quality.

Weight

Item			4KB1	4KB2
Weight g (solenoid valve only)	2-position	Single	70	115
		Double	110	155
	3-position		120	170
End block g			54.3	62.3
Supply and exhaust block g			59.2	106.6
Valve block g			29.7	51.5
Partition block g			11.6	19.3

Flow characteristics

Model No.	Solenoid position		C[dm³/(s·bar)]	b
4KB1	2-position	Single	0.70	0.32
		Double		
	3-position	All ports closed	0.60	0.27
		A/B/R connection	0.80	0.21
		P/A/B connection	0.64	0.27
4KB2	2-position	Single	2.6	0.30
		Double		
	3-position	All ports closed	2.4	0.31
		A/B/R connection	3.1	0.27
		P/A/B connection	2.3	0.25

*1: Effective cross-sectional area S and sonic conductance C are converted as S ≈ 5.0 × C.

Ozone-proof specifications

(Ending Page 5)

** - Voltage - **P11**

Copper and PTFE free specifications

● Copper- and PTFE-based materials are not used in the flow path.

** - Voltage - **P6**

CE marking specifications

** - Voltage - **ST**

• Standard voltage of 24 VDC or less is CE marking-compatible even if the model No. is not indicated with "ST".

MN4KB1/2 Series

Block manifold; sub-plate piping

How to order

● Single solenoid valve for block manifold

N 4KB1 1 9 A - 00 - M1 B ○ —— AC100V * Gasket/mounting screw attached

N 4KB2 1 9 —— 00 - M1 B ○ —— AC100V * Gasket/mounting screw attached

● Block manifold

MN 4KB1 1 0 A - H6 - M1 B ○ - 5 - AC100V - 2 3 0 0 0 * Be sure to fill in the "manifold specifications sheet" (pages 1346, 1347).

MN 4KB2 1 0 —— H6 - M1 B ○ - 5 - AC100V - 2 3 0 0 0

Ⓐ Model No.

Ⓑ Solenoid position

Ⓒ Port size

Ⓓ Manual override

Ⓔ Electrical connections

* Refer to page 1263 for the circuit diagram with surge suppressor/lamp.

Ⓕ Other options

Ⓖ Station No.

Ⓗ Voltage

Code		Description	Ⓐ Model No. 4KB1	4KB2
Ⓑ Solenoid position	1	2-position single	●	●
	2	2-position double	●	●
	3	3-position all ports closed	●	●
	4	3-position A/B/R connection	●	●
	5	3-position P/A/B connection	●	●
	8	Mix manifold (*1) (when there are multiple solenoid positions)	●	●
Ⓒ Port size	H4	ø4 push-in fitting	●	
	H6	ø6 push-in fitting	●	●
	H8	ø8 push-in fitting	●	●
	H10	ø10 Push-in fitting		●
	HX	Mix/push-in fitting	●	●
Ⓓ	Blank	Non-locking manual override	●	●
	M1	Locking manual override	●	●
Ⓔ Electrical connections		Grommet lead wire		
	Blank	Grommet lead wire (300 mm)	●	●
		Compact terminal box		
	B	Without lead wire	●	●
	L	Without lead wire — Refer to [Table 1] at left for details. (*2)		
	LS	No lead wire, with surge suppressor/lamp		
		C-connector (lead wire lateral direction)		
	C	Lead wire length (300 mm)	●	●
	C00	Lead wire length (500 mm)	●	●
	C01	Lead wire length (1000 mm)	●	●
	C02	Lead wire length (2000 mm)	●	●
	C03	Lead wire length (3000 mm)	●	●
	C1	Without lead wire	●	●
	C2	Lead wire (300 mm), surge suppressor, indicator lamp	●	●
	C20	Lead wire (500 mm), surge suppressor, indicator lamp	●	●
	C21	Lead wire (1000 mm), surge suppressor, indicator lamp	●	●
	C22	Lead wire (2000 mm), surge suppressor, indicator lamp	●	●
	C23	Lead wire (3000 mm), surge suppressor, indicator lamp	●	●
	C3	No lead wire, with surge suppressor/indicator lamp	●	●
		D-connector (lead wire upward direction)		
	D	Lead wire length (300 mm)	●	●
	D00	Lead wire length (500 mm)	●	●
	D01	Lead wire length (1000 mm)	●	●
	D02	Lead wire length (2000 mm)	●	●
	D03	Lead wire length (3000 mm)	●	●
	D1	Without lead wire	●	●
	D2	Lead wire (300 mm), surge suppressor, indicator lamp	●	●
	D20	Lead wire (500 mm), surge suppressor, indicator lamp	●	●
	D21	Lead wire (1000 mm), surge suppressor, indicator lamp	●	●
	D22	Lead wire (2000 mm), surge suppressor, indicator lamp	●	●
	D23	Lead wire (3000 mm), surge suppressor, indicator lamp	●	●
	D3	No lead wire, with surge suppressor/indicator lamp	●	●
Ⓕ	Blank	No option	●	●
	S	Surge suppressor attached (*3) (*4)	●	●
	-A	Coolant supported (packing: FKM)	●	●
Ⓖ	2	2 stations	●	●
	to	to	●	●
	25	25 stations	●	●
Ⓗ Voltage	AC100V	Standard — 100 VAC 50/60 Hz	●	●
	AC200V	Standard — 200 VAC 50/60 Hz	●	●
	DC24V	Standard — 24 VDC	●	●
	DC12V	Option — 12 VDC	●	●
	AC110V	Option — 110 VAC 50/60 Hz	●	●
	AC220V	Option — 220 VAC 50/60 Hz	●	●
* Other custom order products				
AC24V			●	●
AC115V			●	●
AC120V			●	●

[Table 1] Compact terminal box L/LS compatibility table

Code	Description			4KB1	4KB2	Surge suppressor
L	Without lead wire	With indicator lamp	AC	●	●	
			DC			
		Surge suppressor, indicator lamp	AC			
			DC	●	●	Integrated
LS	Without lead wire	Surge suppressor, indicator lamp	AC	●	●	Integrated
			DC			Integrated

⚠ Precautions for model No. selection

Note Be sure to fill in the "block manifold specifications sheet" on pages 1346, 1347.

*1: When the solenoid position is mixed (8), indicate the descriptions of the combination at the end of the model No. Refer to the following page.

*2: The DC voltage models of the compact terminal box "L" of 4KB1, 4KB2 are equipped with a surge suppressor.

*3: The surge suppressor for attachment is a suppression connector when the grommet lead wire is 24 VDC or less.

*4: The surge suppressor can only be selected when the grommet lead wire or compact terminal box "B" has been selected for the electrical connections.

[Example of model No.]

MN4KB210-H6-M1B-2-AC100V

Ⓐ Model : MN4KB2
Ⓑ Solenoid position : 2-position single
Ⓒ Port size : ø6 Push-in fitting
Ⓓ Manual override : Locking manual override
Ⓔ Electrical connections : Compact terminal box/without lead wire
Ⓕ Other options : None
Ⓖ Station No. : 2 stations
Ⓗ Voltage : 100 VAC50/60 Hz

[Mix manifold]

● How to list combination contents
When selecting a combination manifold (listing 8 in Ⓑ), list the quantity used for each function of single solenoid valves after the normal model No. display.
In addition, list the code for required functions (refer to table below) and the arrangement No. (numbering up to specified station No. with left side as 1) after the model No. as shown in the example.

Code	Function
S1	2-position single
S2	2-position double
S3	3-position all ports closed
S4	3-position A/B/R connection
S5	3-position P/A/B connection

● With a mix manifold, when using 10 or more actuators of the same model No., specify using the codes in the table below.

Actuator quantity	10	11	12	13	14	15	16	17	18	19
Code	A	B	C	D	E	F	G	H	I	J

How to order masking plate kit

MN 4KB180 A -MP-KIT- S

* Gasket/mounting screw attached

List only for 4KB180

Ⓐ Model No.

Ⓑ Type

Ⓐ Model No.
4KB180
4KB280

Ⓑ Type	
S	For single solenoid
D	For double solenoid, 3-position

Dimensions CAD

MN4KB1

● Grommet lead wire

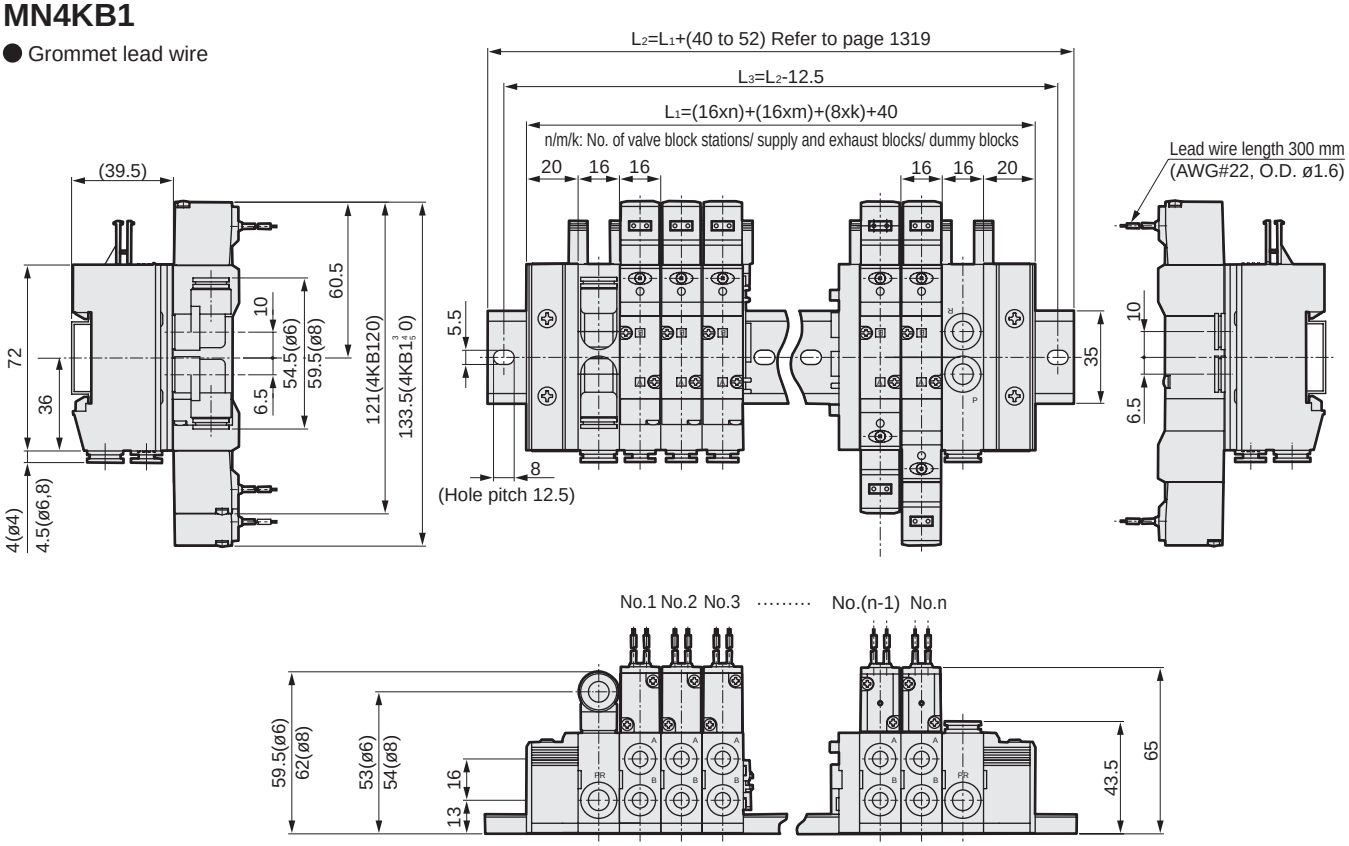

■ Single model No. for manifold
N4KB1*9A-00- option - voltage

MN4KB2

● Grommet lead wire

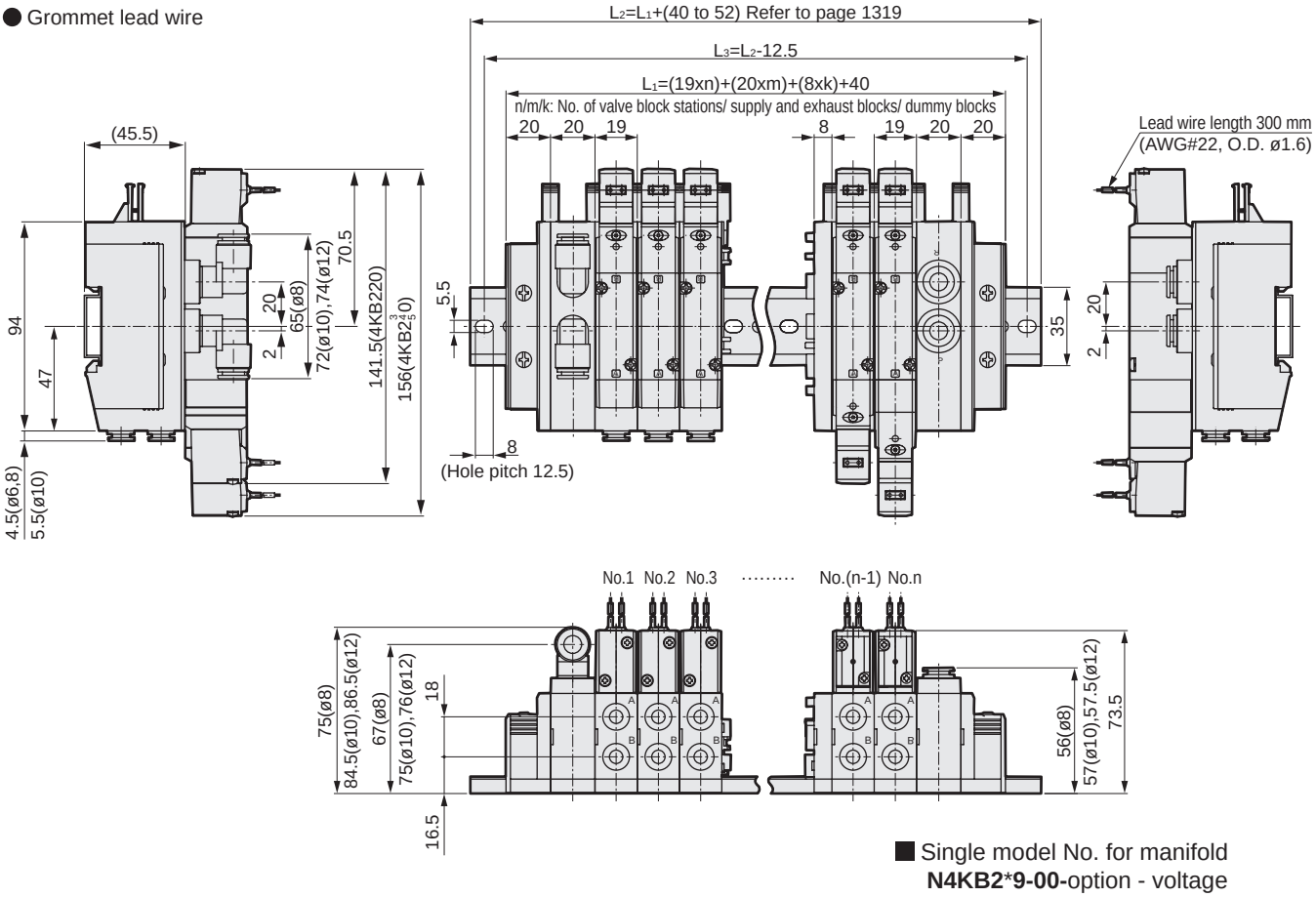

■ Single model No. for manifold
N4KB2*9-00-option - voltage

Dimensions

MN4KB1

● Compact terminal box: (B/L/LS)

Without indicator lamp

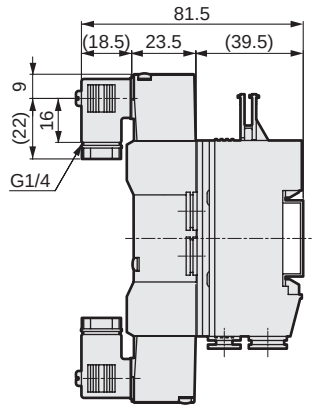

With indicator lamp

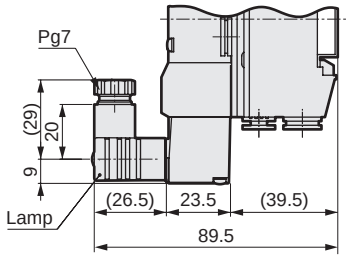

● C-connector:
(C/C1/C0*/C2/C2*/C3)

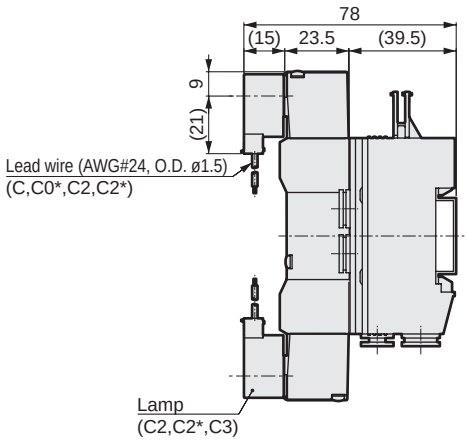

● D-connector:
(D/D1/D0*/D2/D2*/D3)

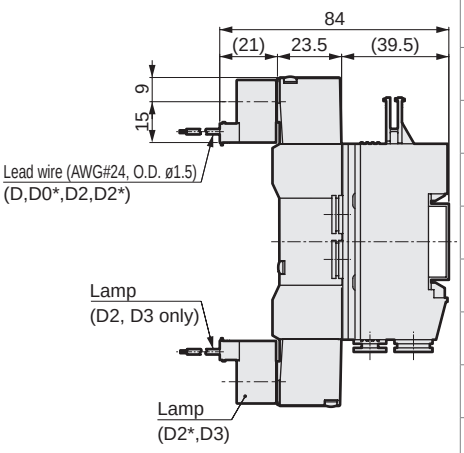

MN4KB2

● Compact terminal box: (B/L/LS)

Without indicator lamp

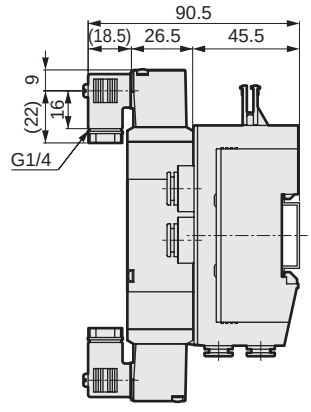

With indicator lamp

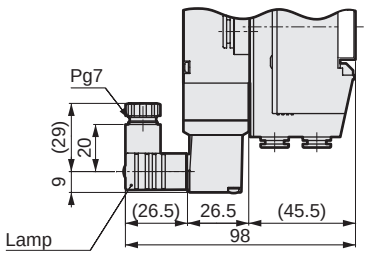

● C-connector:
(C/C1/C0*/C2/C2*/C3)

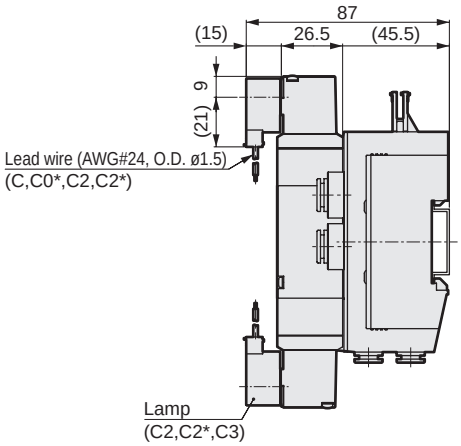

● D-connector:
(D/D1/D0*/D2/D2*/D3)

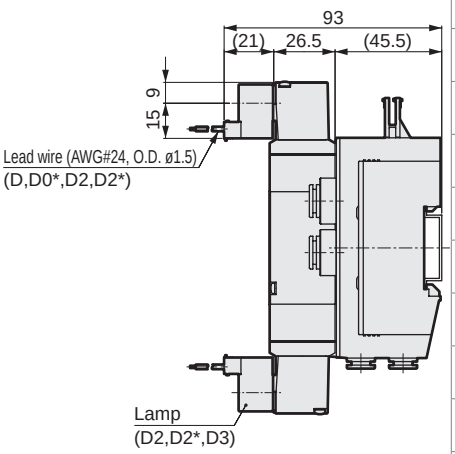

As units can be freely assembled, it is easy to change the number of stations, perform maintenance, etc.

● **Valve block with solenoid valve**
The types of solenoid valve required will be arranged on a DIN rail at the number of stations required.

● **Supply and exhaust/supply/exhaust blocks**
Units can be freely arranged at the adjacent parts of each valve block.
However, the supply and exhaust block is basically arranged on the right side of the valve block when the A/B ports are facing forward.
In addition the supply and exhaust/exhaust block H12 alone cannot be arranged between valve blocks.
Supply/exhaust blocks can be added as necessary.

● **End block**
One each must be arranged on both sides of the valve block and supply and exhaust block.

● **Mounting rail**
The mounting rail will require 40 to 52.5 mm space for installation.

Configuration image

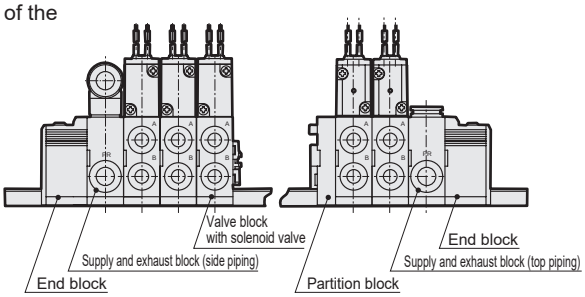

Block manifold configuration

Piping

Piping block

Ⓐ Discrete valve block with solenoid valve

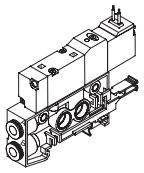

Ⓑ End block

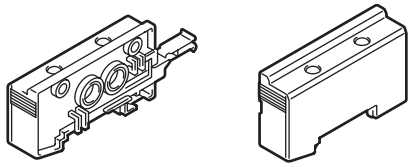

Ⓒ Supply and exhaust block

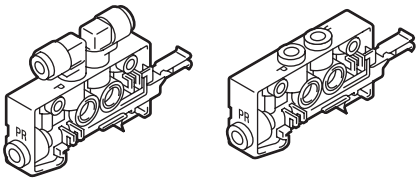

Ⓓ Supply block

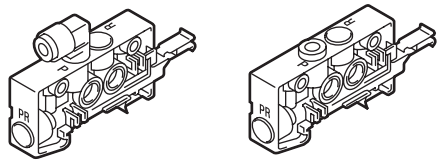

Ⓔ Exhaust block

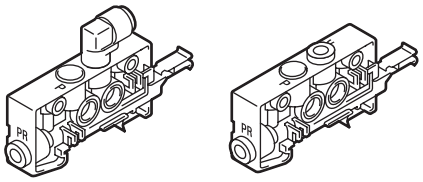

Ⓕ Discrete valve block

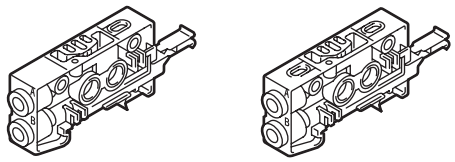

Ⓖ Partition block

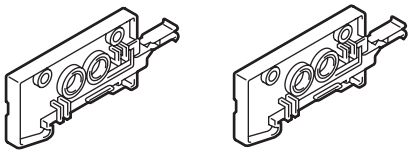

Related products

Related products

Ⓗ Mounting rail

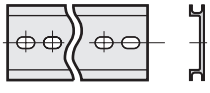

Ⓗ Silencer

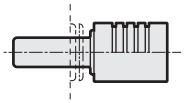

Ⓗ Blanking plug

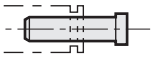

Ⓐ Discrete valve block with solenoid valve (N4KB1)

This type is a set version of the solenoid valve 4KB1 Series.

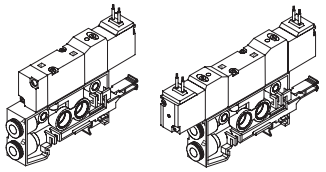

N4KB1 [Ⓐ] [Ⓑ] 0A – [Ⓒ] [Ⓓ] [Ⓔ] – [Ⓕ]

Ⓑ: Solenoid valve operation classification

Ⓐ Solenoid valve switching class

Code	Description
1	2-position single
2	2-position double
3	3-position all ports closed
4	3-position ABR connection
5	3-position PAB connection

Ⓑ Port size

Code	Description
H4	ø4 push-in fitting
H6	ø6 push-in fitting
H8	ø8 push-in fitting

Ⓒ Manual override

Code	Description
Blank	No lock manual override
M1	Locking manual override

Ⓓ Display/protection circuit

Code	Description	Lead wire length
Blank	Grommet lead wire	300 mm
B	Compact terminal box	None
L	Compact terminal box (with lamp)	None
LS	Compact terminal box (with surge suppressor and indicator lamp)	None
C	C-connector	300 mm
C00		500 mm
C01		1000 mm
C02		2000 mm
C03		3000 mm
C1		None
C2	C-connector (with surge suppressor and indicator lamp)	300 mm
C20		500 mm
C21		1000 mm
C22		2000 mm
C23		3000 mm
C3		None
D	D-connector	300 mm
D00		500 mm
D01		1000 mm
D02		2000 mm
D03		3000 mm
D1		None
D2	D-connector (with surge suppressor and indicator lamp)	300 mm
D20		500 mm
D21		1000 mm
D22		2000 mm
D23		3000 mm
D3		None

Ⓔ Other options

Code	Description
Blank	None
S	Surge suppressor attached

● The surge suppressor for attachment is a suppression connector for 24 VDC or less.

Ⓕ Voltage

Code	Description	
AC100V	100 VAC 50/60 Hz	Standard
AC200V	200 VAC 50/60 Hz	
DC24V	24 VDC	
AC110V	110 VAC 50/60 Hz	Option
AC220V	220 VAC 50/60 Hz	
DC12V	12 VDC	

● 100/200 VAC coil is available for 110/220 VAC (60 Hz).

* With DC voltage, L is equipped with a surge suppressor

Ⓐ Discrete valve block with solenoid valve (N4KB2)

This type is a set version of the solenoid valve 4KB2 Series.

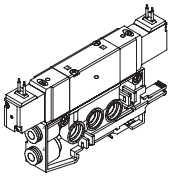

N4KB2 [Ⓐ] [Ⓑ] 0 – [Ⓒ] [Ⓓ] [Ⓔ] – [Ⓕ]

Ⓑ: Solenoid valve operation classification

Ⓐ Solenoid valve switching class

Code	Description
1	2-position single
2	2-position double
3	3-position all ports closed
4	3-position ABR connection
5	3-position PAB connection

Ⓑ Port size

Code	Description
H6	ø6 push-in fitting
H8	ø8 push-in fitting
H10	ø10 push-in fitting

Ⓒ Manual override

Code	Description
Blank	No lock manual override
M1	Locking manual override

Ⓓ Display/protection circuit

Code	Description	Lead wire length
Blank	Grommet lead wire	300 mm
B	Compact terminal box	None
L	Compact terminal box (with lamp)	None
LS	Compact terminal box (with surge suppressor and indicator lamp)	None
C	C-connector	300 mm
C00		500 mm
C01		1000 mm
C02		2000 mm
C03		3000 mm
C1		None
C2	C-connector (with surge suppressor and indicator lamp)	300 mm
C20		500 mm
C21		1000 mm
C22		2000 mm
C23		3000 mm
C3		None
D	D-connector	300 mm
D00		500 mm
D01		1000 mm
D02		2000 mm
D03		3000 mm
D1		None
D2	D-connector (with surge suppressor and indicator lamp)	300 mm
D20		500 mm
D21		1000 mm
D22		2000 mm
D23		3000 mm
D3		None

Ⓔ Other options

Code	Description
Blank	None
S	Surge suppressor attached

● The surge suppressor for attachment is a suppression connector for 24 VDC or less.

Ⓕ Voltage

Code	Description	
AC100V	AC100V 50/60 Hz	Standard
AC200V	AC200V 50/60 Hz	
DC24V	DC24V	
AC110V	AC110V 50/60 Hz	Option
AC220V	AC220V 50/60 Hz	
DC12V	DC12V	

● 100/200 VAC coil is available for 110/220 VAC (60 Hz).

* With DC voltage, L is equipped with a surge suppressor

B End block (NE)

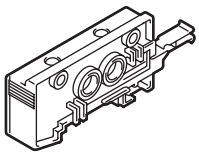

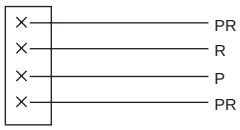

Model No.	Description
N4KB1A-NE1	End block on left side with the A/B port of the manifold facing forward

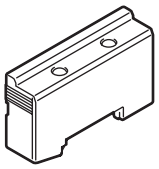

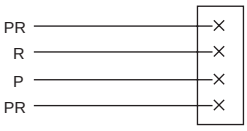

Model No.	Description
N4KB1A-NE2	End block on right side with the A/B port of the manifold facing forward

C Supply and exhaust block (NQ)

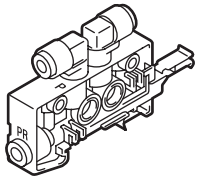

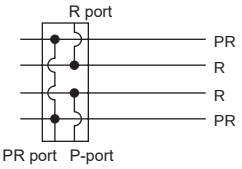

Model No.	P-port	R port	PR port
N4KB1A-NQSH8	ø8	ø8	ø8
N4KB1A-NQSH886	ø8	ø8	ø6
N4KB1A-NQSH686	ø6	ø8	ø6
N4KB1A-NQSH6	ø6	ø6	ø6

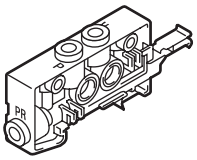

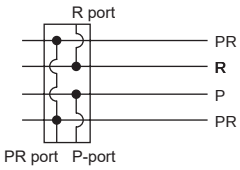

Model No.	P-port	R port	PR port
N4KB1A-NQUH8	ø8	ø8	ø8
N4KB1A-NQUH886	ø8	ø8	ø6
N4KB1A-NQUH686	ø6	ø8	ø6
N4KB1A-NQUH6	ø6	ø6	ø6

D Supply block (NP)

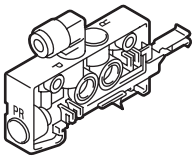

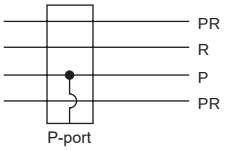

Model No.	P-port
N4KB1A-NPSH8	ø8
N4KB1A-NPSH6	ø6

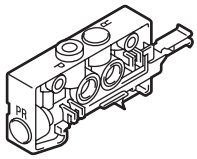

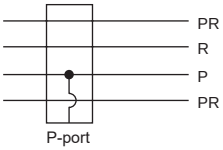

Model No.	P-port
N4KB1A-NPUH8	ø8
N4KB1A-NPUH6	ø6

E Exhaust block (NR)

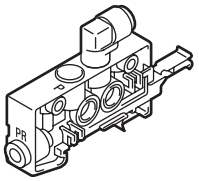

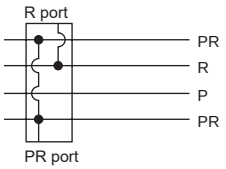

Model No.	R port	PR port
N4KB1A-NRSH8	ø8	ø8
N4KB1A-NRSH86	ø8	ø6
N4KB1A-NRSH6	ø6	ø6

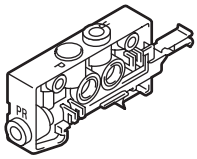

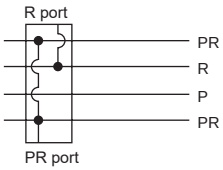

Model No.	R port	PR port
N4KB1A-NRUH8	ø8	ø8
N4KB1A-NRUH86	ø8	ø6
N4KB1A-NRUH6	ø6	ø6

F Discrete valve block (NS)

● For **N4KB110A**

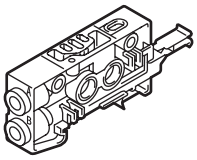

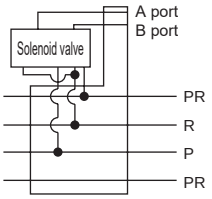

Model No.	A/B port
N4KB1A-NS1SH8	ø8
N4KB1A-NS1SH6	ø6
N4KB1A-NS1SH4	ø4

● For **N4KB120A to N4KB150A**

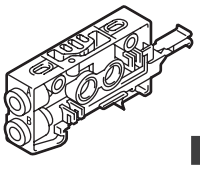

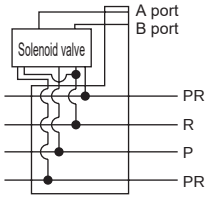

Model No.	A/B port
N4KB1A-NS2SH8	ø8
N4KB1A-NS2SH6	ø6
N4KB1A-NS2SH4	ø4

● As the NS is dedicated for each solenoid position Ⓐ, exchange the NS when changing the solenoid positions.

G Partition block (NC)

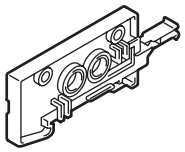

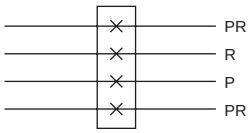

Model No.	Description
N4KB1A-NC1	All passages closed

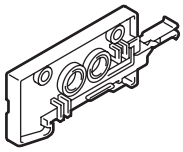

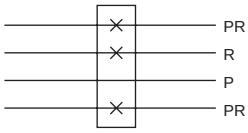

Model No.	Description
N4KB1A-NC2	Exhaust passages closed

H Related products

● Mounting rail

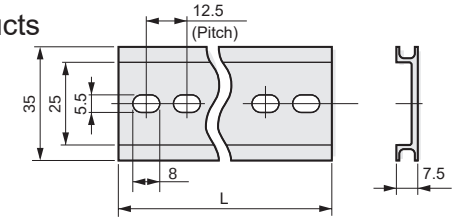

Model No.	L
BAA 500	500
BAA1000	1000

● Silencer

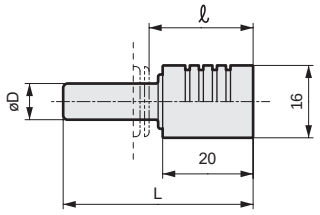

Model No.	D	L	ℓ
SLW-H6	ø6	41	23.5
SLW-H8	ø8	42	23

● Blanking plug

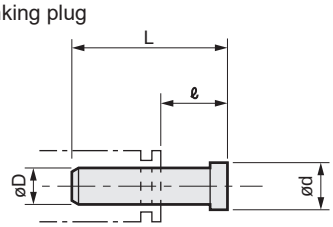

Model No.	D	L	ℓ	d
GWP4-B	ø4	27	11	6
GWP6-B	ø6	29	11.5	8
GWP8-B	ø8	33	14	10

● New urethane tube

NU- 04

● Soft nylon tube

F-15 04

● Urethane tube

U-95 04

Ⓐ Compatible tube O.D. size
04 ø4
06 ø6
08 ø8

B End block (NE)

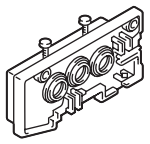

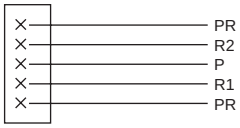

Model No.	Description
N4KB2-2NE1	End block on left side with the A/B port of the manifold facing forward

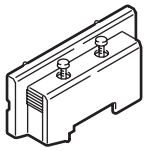

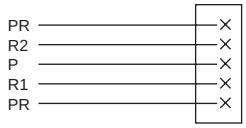

Model No.	Description
N4KB2-2NE2	End block on right side with the A/B port of the manifold facing forward

C Supply and exhaust block (NQ)

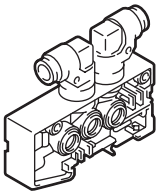

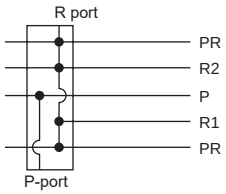

Model No.	P-port	R port
N4KB2-2NQSH12	ø12	ø12
N4KB2-2NQSH10	ø10	ø10
N4KB2-2NQSH8	ø 8	ø 8

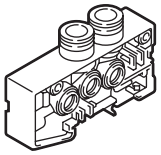

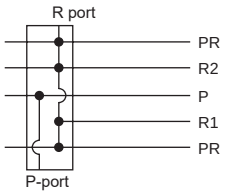

Model No.	P-port	R port
N4KB2-2NQUH12	ø12	ø12
N4KB2-2NQUH10	ø10	ø10
N4KB2-2NQUH8	ø 8	ø 8

D Supply block (NP)

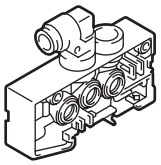

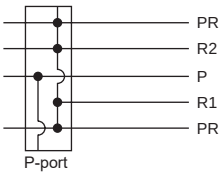

Model No.	P-port
N4KB2-2NPSH12	ø12
N4KB2-2NPSH10	ø10
N4KB2-2NPSH8	ø 8

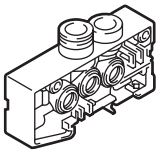

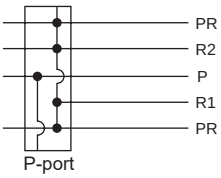

Model No.	P-port
N4KB2-2NPUH12	ø12
N4KB2-2NPUH10	ø10
N4KB2-2NPUH8	ø 8

E Exhaust block (NR)

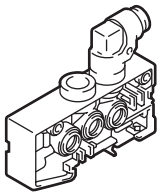

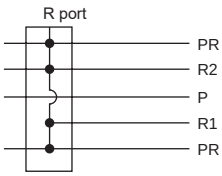

Model No.	R port
N4KB2-2NRSH12	ø12
N4KB2-2NRSH10	ø10
N4KB2-2NRSH8	ø 8

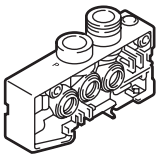

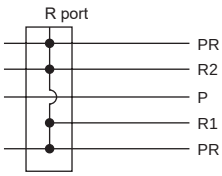

Model No.	R port
N4KB2-2NRUH12	ø12
N4KB2-2NRUH10	ø10
N4KB2-2NRUH8	ø 8

F Discrete valve block (NS)

● For **N4KB210**

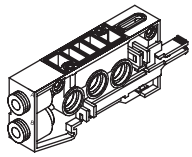

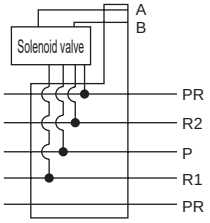

Model No.	A/B port
N4KB2-2NS1SH10	ø10
N4KB2-2NS1SH8	ø 8
N4KB2-2NS1SH6	ø 6

● **N4KB220 to N4KB250**

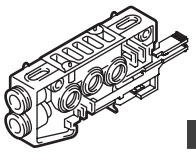

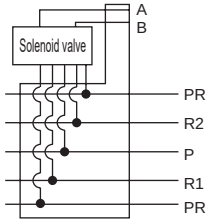

Model No.	A/B port
N4KB2-2NS2SH10	ø10
N4KB2-2NS2SH8	ø 8
N4KB2-2NS2SH6	ø 6

● As the NS is dedicated for each solenoid position (A), exchange the NS when changing the solenoid positions.

G Partition block (NC)

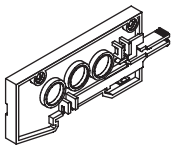

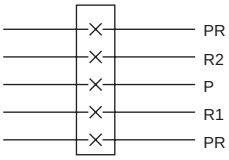

Model No.	Description
N4KB2-2NC1	All passages closed

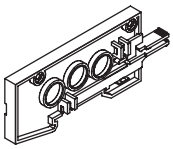

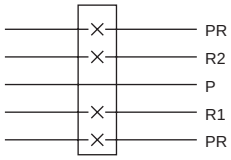

Model No.	Description
N4KB2-2NC2	Exhaust passages closed

H Related products

● Mounting rail

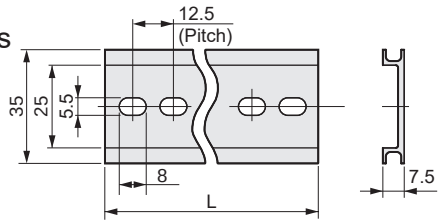

Model No.	L
BAA 500	500
BAA1000	1000

● Silencer

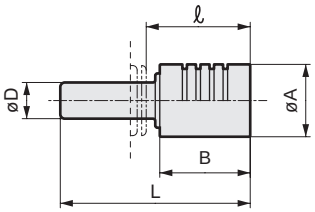

Model No.	D	L	ℓ	B	A
SLW-H8	ø 8	42	23	20	16
SLW-H10	ø10	53	31.5	27	20
SLW-H12	ø12	66	43	37	25

● Blanking plug

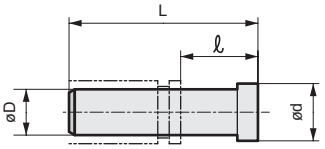

Model No.	D	L	ℓ	d
GWP6-B	ø 6	29	11.5	8
GWP8-B	ø 8	33	14	10
GWP10-B	ø10	40	18.5	12
GWP12-B	ø12	43	20	14

● New urethane tube

NU- 06

● Soft nylon tube

F-15 06

● Urethane tube

U-95 06

(A) Compatible tube O.D. size	
06	ø 6
08	ø 8
10	ø10
12	ø12

How to disassemble/assemble ⚠ CAUTION: Be sure to turn power OFF and release pressure before increasing or decreasing the number of manifold stations.

Assembling the block manifold

(1) Fix the DIN rail.
(2) Mount the necessary number of stations of end blocks, supply and exhaust blocks, and valve blocks in order on the rail and connect between the blocks with the connecting key.
(3) Fasten the screws on the end blocks on both sides and fix onto the rail.
(4) Mount the solenoid valve on the valve block. (The solenoid valve is mounted on the valve block at shipment)
(5) Perform piping of tubes and wiring to complete the task.

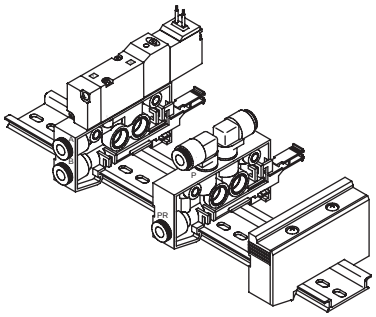

Mounting the end block

(1) Upon confirming that the mounting screws have been loosened, press from the top and hook the movable claws onto the rail.
(2) Lift the block to confirm that the claws have been secured.
(3) After mounting all of the blocks, fasten with the two screws. The appropriate tightening torque is 1.4 N·m.

Removing the end block

(1) Loosen the screws 6 or 7 turns to pinch and pull out the connecting key.
(2) Shift the end block by 4 mm or more and pull in the direction of the arrow in the following drawing to remove.

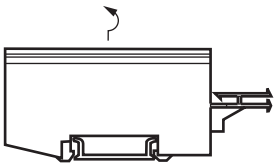

Mounting the supply and exhaust block and valve block

(1) Hook the fixation claws on the rail first and press down on the movable claws from the top.
(2) Slide until there are no gaps between the blocks and push in the connecting key.

Mounting the solenoid valve

(1) Fit the dedicated gasket in the valve block.
(2) Fasten the solenoid valve with 2 screws. The appropriate tightening torque is 0.6 N·m for N4KB1 and 0.8 N·m for N4KB2.

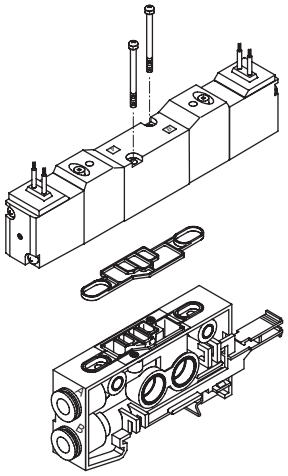

Removing the supply and exhaust block and valve block

(1) Remove the end block.
(2) Pinch and pull out the connecting key.
(3) Shift the blocks by 4 mm or more and then pull up on the side with the movable claws to remove.

MEMO

MN4KB1/2 Series

How to fill out block manifold specifications sheet

● Manifold model No. (example)

MN4KB1 [1] 0A - [HX] - [M1] [C2] - [ ] - [7] - [100 VAC]

- [1] (B) Solenoid position
- 0A Solenoid valve
- [HX] (C) Port size
- [M1] (D) Manual position
- [C2] (E) Electrical connections
- [ ] (F) Other options
- [7] (G) Solenoid valve station No.2 to 25
- [100 VAC] (H) Voltage

Part name	Model No.	Installation position No. 1	2	3	4	5	6	7	8	9	10	11	12	13	14	15	16	17	18	19	20	21	22	23	24	25	Quantity
End block (1)	**NE1**	○																									1
End block (2)	**NE2**										○																1
Supply and exhaust block	**NQSH 8**		○																								1
	NQUH																										
Supply block	**NPSH**																										
	NPUH																										
Exhaust block	**NRSH**																										
	NRUH																										
Valve block with solenoid valve	**N4KB1 1 0A- H 4**			○	○	○	○																				4
	N4KB1 1 0A- H 6							○	○	○																	3
Partition block (1) (all passages closed)	**NC1**																										
Partition block (2) (exhaust passages closed)	**NC2**																										
Silencer (for ø6 push-in)	**SLW-H6**			List the number of units to be used in the field on the left																							
Silencer (for ø8 push-in)	**SLW-H8**																										
Plug (for ø4 push-in)	**GWP4-B**			List the number of units to be used in the field on the left																							
Plug (for ø6 push-in)	**GWP6-B**																										
Plug (for ø8 push-in)	**GWP8-B**																										
Mounting rail length	**L_2=**	Fill in L_2 from the next page when a length other than the standard length is required.																									

* A simplified circuit diagram for the above specification example is shown on the next page. Use for reference.

Preparing manifold specifications sheet

- Complete from the left end, with the piping port facing forward.
  (Write the block model numbers and positions you determined referring to the block configurations (pages 1336 to 1341).)
- Write the total number of blocks specified in the quantity field at the table far right.
- Indicate the mounting rail length.
  (Fill in only when a length other than the standard length is required.)
- As there are manifold specifications sheets for each of the various series, fill in the form for the corresponding specifications.
  ·MN4KB1 ..... page 1346
  ·MN4KB2 ..... page 1347

How to determine the length of the manifold

● How to calculate the manifold length

Manifold length (L_1) = $\overset{\text{Valve block}}{(A \times n)} + \overset{\text{Supply and exhaust block}}{(B \times m)} + \overset{\text{Partition block}}{(C \times l)} + 40$

Mounting rail length (L_2) = $L_2' \times 12.5$

L_2': $\dfrac{L_1+40}{12.5} \rightarrow$ round up to integer

Rail mounting pitch (L_3) = L_2 -12.5

n, m and l show usage per block.
n: valve blocks m: supply and exhaust blocks l: partition blocks
A, B, and C indicate the length (width) of each block.

Block length (width) dimensions table (mm)

		MN4KB1	MN4KB2
A	Valve block	16	19
B	Supply and exhaust block	16	20
C	Partition block	8	8

L_1: Manifold length		L_2: Rail length	L_3: Mounting pitch	L_1: Manifold length		L_2: Rail length	L_3: Mounting pitch
	72.5 or less	112.5	100	Over 285	297.5 or less	337.5	325
Over 72.5	85 or less	125	112.5	297.5	310	350	337.5
85	97.5	137.5	125	310	322.5	362.5	350
97.5	110	150	137.5	322.5	335	375	362.5
110	122.5	162.5	150	335	347.5	387.5	375
122.5	135	175	162.5	347.5	360	400	387.5
135	147.5	187.5	175	360	372.5	412.5	400
147.5	160	200	187.5	372.5	385	425	412.5
160	172.5	212.5	200	385	397.5	437.5	425
172.5	185	225	212.5	397.5	410	450	437.5
185	197.5	237.5	225	410	422.5	462.5	450
197.5	210	250	237.5	422.5	435	475	462.5
210	222.5	262.5	250	435	447.5	487.5	475
222.5	235	275	262.5	447.5	460	500	487.5
235	247.5	287.5	275	460	472.5	512.5	500
247.5	260	300	287.5	472.5	485	525	512.5
260	272.5	312.5	300	485	497.5	537.5	525
272.5	285	325	312.5	497.5	510 *	550	537.5

* If the length exceeds 510, calculate using a multiple of 12.5.

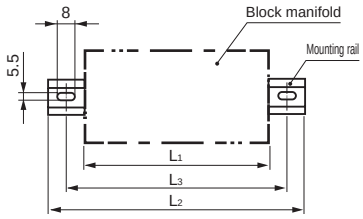

Reference circuit diagram The simplified circuit diagram of the manifold model No. (example) on the previous page is shown below.

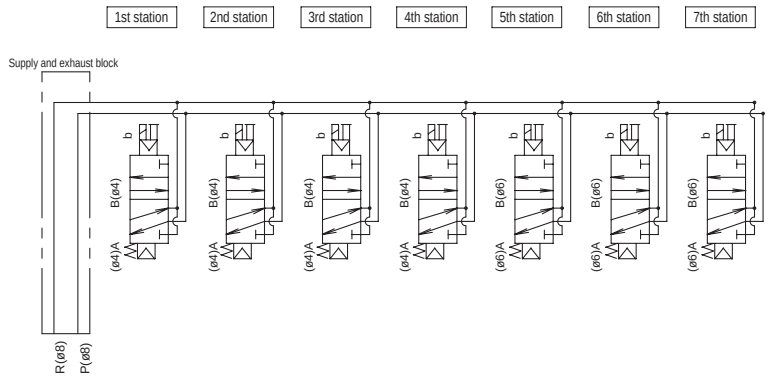

● The manifold station numbers and installation position numbers are set in order from the left with the piping port facing forward.
(The supply and exhaust blocks, partition block, and end block are not included in the manifold station No.)
● Select the model No. from block configurations (pages 1336 to 1341) and the page for model numbers of each of the specifications.

4KB1 block manifold specifications sheet

Issued / /

Company

Contact

Order No.

● Contact ● Quantity set(s) ● Delivery date /

Slip No.	Order No.

● Manifold model No.

MN4KB1 □ 0A- □ - □ □ - □ - □ - □

B Solenoid valve · C Port size · D Electrical connections · E · F Other options · G Solenoid valve station No. 2 to 25 · H Voltage

Solenoid position · Manual override

B Solenoid position

Code	Description
1	2-position single
2	2-position double
3	3-position all ports closed
4	3-position A/B/R connection
5	3-position P/A/B connection
8	Mix manifold

C Port size

Code	Description
H4	ø4 push-in fitting
H6	ø6 push-in fitting
H8	ø8 push-in fitting
HX	Mix/push-in fitting

D Manual override

Code	Description
Blank	No lock manual override
M1	Locking manual override

E Electrical connections

Code	Description	Lead wire length
Blank	Grommet lead wire	300 mm
B	Compact terminal box	None
L	Compact term box (with indicator lamp) * DC voltage, surge suppressor equipped	None
LS	Compact terminal box (with surge suppressor and indicator lamp)	None
C	C-connector	300 mm
C00		500 mm
C01		1000 mm
C02		2000 mm
C03		3000 mm
C1		None
C2	C-connector (with surge suppressor/ lamp)	300 mm
C20		500 mm
C21		1000 mm
C22		2000 mm
C23		3000 mm
C3		None
D	D-connector	300 mm
D00		500 mm
D01		1000 mm
D02		2000 mm
D03		3000 mm
D1		None
D2	D-connector (with surge suppressor/ lamp)	300 mm
D20		500 mm
D21		1000 mm
D22		2000 mm
D23		3000 mm
D3		None

F Other options

Code	Description
Blank	None
S	Surge suppressor attached (grommet lead wire only)

H Voltage

Code	Description	
AC100V	100 VAC50/60 Hz	Standard
AC200V	200 VAC50/60 Hz	
DC24V	24 VDC	
DC12V	12 VDC	Option
AC110V	110 VAC50/60 Hz	
AC220V	220 VAC50/60 Hz	

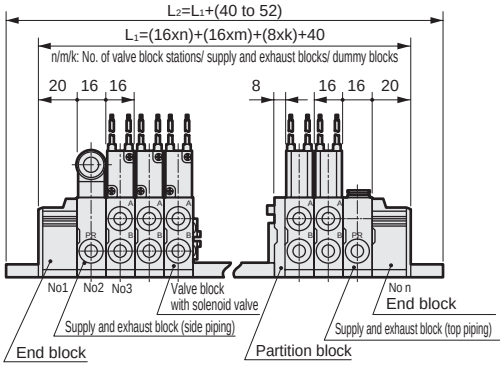

· When filling in this field, select the model No. from "Block configurations" (pages 1336 to 1339) and specify the details in the □ space.

Specify the installation position numbers from the left side when viewing the figure above right. Mark instructions with a circle inside □.

Part name	(Page)	Model No.	Installation position No. 1 2 3 4 5 6 7 8 9 10 11 12 13 14 15 16 17 18 19 20 21 22 23 24 25	Quantity
End block (1)	(Page 1338)	NE1	○	
End block (2)	(Page 1338)	NE2		
Supply and exhaust block	(Page 1338)	NQSH □□□		
		NQUH □□□		
Supply block	(Page 1338)	NPSH □		
		NPUH □		
Exhaust block	(Page 1338)	NRSH □□		
		NRUH □□		
Valve block with solenoid valve	(Page 1337)	N4KB1 □ 0A- □ H		
		N4KB1 □ 0A- □ H		
Partition block (1) (all passages closed)	(Page 1339)	NC1		
Partition block (2) (exhaust passages closed)	(Page 1339)	NC2		
Silencer (for ø6 push-in)	(Page 1339)	SLW-H6		List the number of units to be used in the field on the left
Silencer (for ø8 push-in)	(Page 1339)	SLW-H8		
Plug (for ø4 push-in)	(Page 1339)	GWP4-B		List the number of units to be used in the field on the left
Plug (for ø6 push-in)	(Page 1339)	GWP6-B		
Plug (for ø8 push-in)	(Page 1339)	GWP8-B		
Mounting rail length (How to determine the length: page 1345)		L2= □	List the length L2 according to the table on page 1345.	

Mark instructions inside □.

4KB2 block manifold specifications sheet

Issued / /

Company

Contact

Order No.

● Contact ● Quantity set(s) ● Delivery date /

Slip No.	Order No.

● Manifold model No.

MN4KB2 ☐ **0** - ☐ - ☐ ☐ - ☐ - ☐ - ☐

Ⓑ Solenoid valve | Ⓒ Port size | Ⓓ Manual override | Ⓔ Electrical connections | Ⓕ Other options | Ⓖ Solenoid valve station No. 2 to 25 | Ⓗ Voltage

Ⓑ Solenoid position | Ⓒ Port size | Manual override | Other options | Voltage

Ⓑ Solenoid position

Code	Description
1	2-position single
2	2-position double
3	3-position all ports closed
4	3-position A/B/R connection
5	3-position P/A/B connection
8	Mix manifold

Ⓒ Port size

Code	Description
H6	ø6 Push-in fitting
H8	ø8 Push-in fitting
H10	ø10 Push-in fitting
HX	Mix/push-in fitting

Ⓓ Manual override

Code	Description
Blank	No lock manual override
M1	Locking manual override

Ⓔ Electrical connections

Code	Description	Lead wire length
Blank	Grommet lead wire	300 mm
B	Compact terminal box	None
L	Compact term box (with indicator lamp) * DC voltage, surge suppressor equipped	None
LS	Compact terminal box (with surge suppressor and indicator lamp)	None
C	C-connector	300 mm
C00		500 mm
C01		1000 mm
C02		2000 mm
C03		3000 mm
C1		None
C2	C-connector (with surge suppressor/ lamp)	300 mm
C20		500 mm
C21		1000 mm
C22		2000 mm
C23		3000 mm
C3		None
D	D-connector	300 mm
D00		500 mm
D01		1000 mm
D02		2000 mm
D03		3000 mm
D1		None
D2	D-connector (with surge suppressor/ lamp)	300 mm
D20		500 mm
D21		1000 mm
D22		2000 mm
D23		3000 mm
D3		None

Ⓕ Other options

Code	Description
Blank	None
S	Surge suppressor attached (grommet lead wire only)

Ⓗ Voltage

Code	Description	
AC100V	100 VAC50/60 Hz	Standard
AC200V	200 VAC50/60 Hz	
DC24V	24 VDC	
DC12V	12 VDC	
AC110V	110 VAC50/60 Hz	Option
AC220V	220 VAC50/60 Hz	

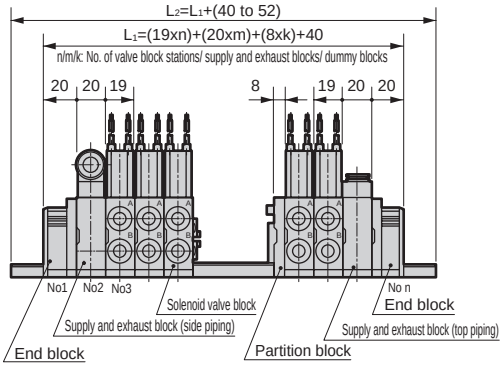

·When filling in this field, select the model No. from "Block configurations" (pages 1336, 1337, 1340, 1341) and specify the details in the ☐ space.

Specify the installation position numbers from the left side when viewing the figure above right. Mark instructions with a circle inside ☐.

Part name	(Page)	Model No.	Installation position No. 1 2 3 4 5 6 7 8 9 10 11 12 13 14 15 16 17 18 19 20 21 22 23 24 25	Quantity
End block (1)	(Page 1340)	**2NE1**	○	
End block (2)	(Page 1340)	**2NE2**		
Supply and exhaust block	(Page 1340)	**2NQSH** ☐☐		
		2NQUH ☐☐		
Supply block	(Page 1340)	**2NPSH** ☐☐		
		2NPUH ☐☐		
Exhaust block	(Page 1340)	**2NRSH** ☐☐		
		2NRUH ☐☐		
Valve block with solenoid valve	(Page 1337)	**N4KB2** ☐☐**O-**☐☐**H**		
		N4KB2 ☐☐**O-**☐☐**H**		
Partition block (1) (all passages closed)	(Page 1341)	**2NC1**		
Partition block (2) (exhaust passages closed)	(Page 1341)	**2NC2**		
Silencer (for ø8 push-in)	(Page 1341)	**SLW-H8**		
Silencer (for ø10 push-in)	(Page 1341)	**SLW-H10**		
Silencer (for ø12 push-in)	(Page 1341)	**SLW-H12**		
Plug (for ø6 push-in)	(Page 1341)	**GWP6-B**		
Plug (for ø8 push-in)	(Page 1341)	**GWP8-B**		
Plug (for ø10 push-in)	(Page 1341)	**GWP10-B**		
Plug (for ø12 push-in)	(Page 1341)	**GWP12-B**		
Mounting rail length (How to determine the length: page 1345)		**L2=** ☐	List the length L2 according to the table on page 1345.	

List the number of units to be used in the field on the left

Use SLW-H12 for the supply and exhaust block with side piping

List the number of units to be used in the field on the left

Mark instructions inside ☐.

Terminal box wiring/connector connection method

Refer to the figures below when wiring the compact terminal box or the C- and D-connectors.

Compact terminal box wiring method (compatible model: 3KA1/4K$_B^A$ 1/4K$_B^A$ 2)

Wire with steps (1) to (6).

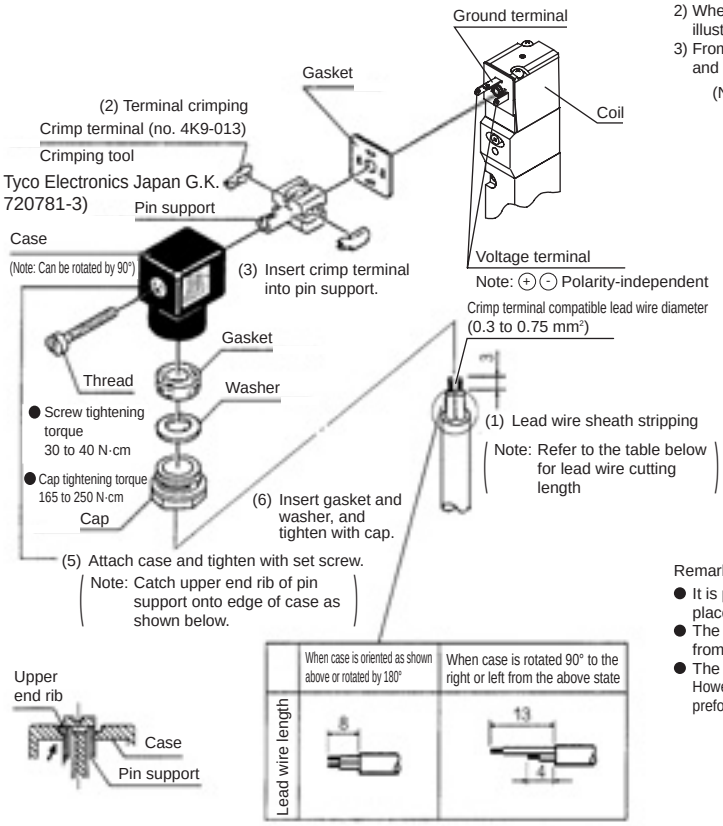

Terminal box wiring method (compatible model: 4K$_B^A$ 3/4K$_B^A$ 4)

Wire the terminal box with steps 1) to 3) referring to the figure below.

1) On the cabtyre cable (7), put the cap (4), washer (5) and gasket (6) in the order, and insert this into the case (2).
2) When using a crimp terminal, prepare the cabtyre cable (7) at an appropriate length as illustrated and crimp the crimp terminal (9) on the end.
3) From the terminal block (3), remove the screw (10), position the crimp terminal (9) (loosen and crimp when using a Y type terminal), and fasten the screw (10) again.

(Note) Tightening torque (1) screws 50 to 60 N·cm (4) cap 250 to 375 N·cm

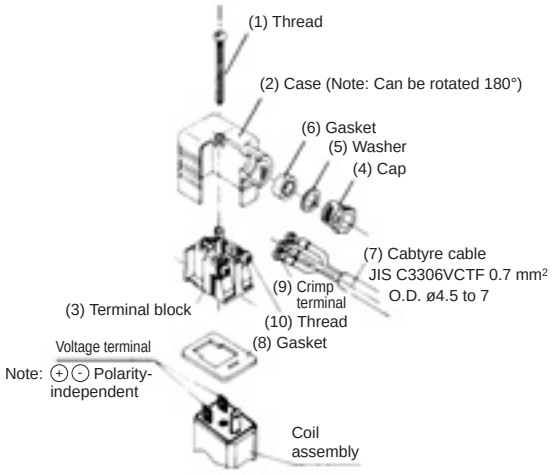

Remarks:

- It is possible to wire the terminals with bare wires. In this case, loosen the screw (10), place the lead wire in the bracket, and fasten the screw again.
- The orientation of the cable lead out port can be changed by pulling out the terminal block from the case, rotating it by 180°, and placing the block back into the case.
- The crimp terminals (9) listed in the table below can be used.
  However, since the terminals in the table below are bare terminals, insulation treatment should be preformed for them. Or use the covered terminals equivalent to the terminals listed in the table below.

Nichifu Terminal Industries Co., Ltd.		Fuji Terminal Industry Co., Ltd.		J.S.T. Mfg Co., Ltd.	
O terminal	Y terminal	O terminal	Y terminal	O terminal	Y terminal
0.3-3 1.25-3 1.25-3S	0.3-3 1.25Y-3 1.25Y-3.5	1.25-3	1.25-YAS3 1.25-YAS3.5	0.5-3 1.25-3	0.25-B3A 1.25-C3A

When using a product of a different manufacturer, be sure to use an equivalent item.

C- and D-connector wiring method (compatible model: 3KA1/4K$_B^A$ Series)

Wire with steps (1) to (6).

* For the details of crimp terminals and crimping tools, contact CKD.

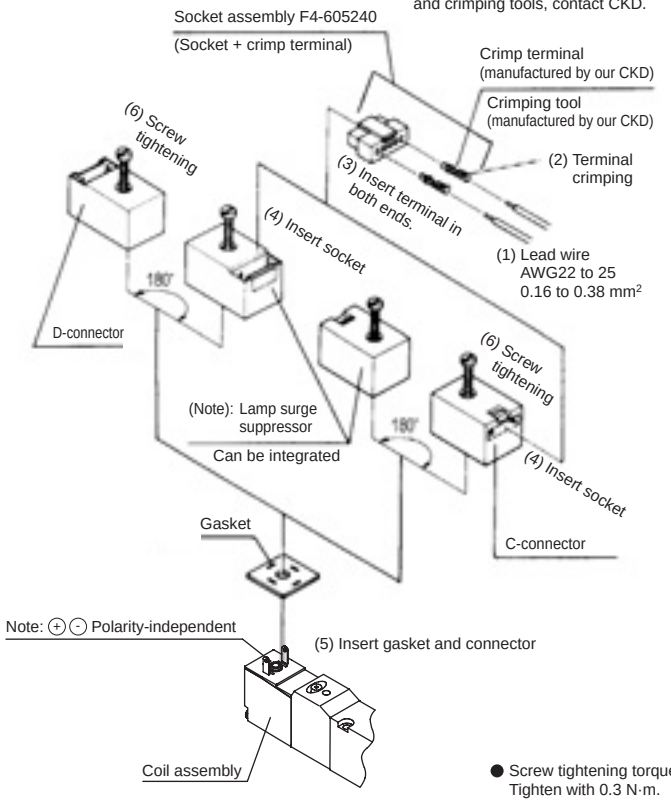

● Screw tightening torque
Tighten with 0.3 N·m.

Compact terminal box with lamp wiring method (compatible model: 3KA1/4K$_B^A$1/4K$_B^A$2)

Wire with steps (1) to (5).

(3) Insert gasket and terminal block into voltage terminal and ground terminal

(2) Tighten lead wire with set screw
A small flat-tip screwdriver is required
Note: Do not tighten together with surge suppressor.

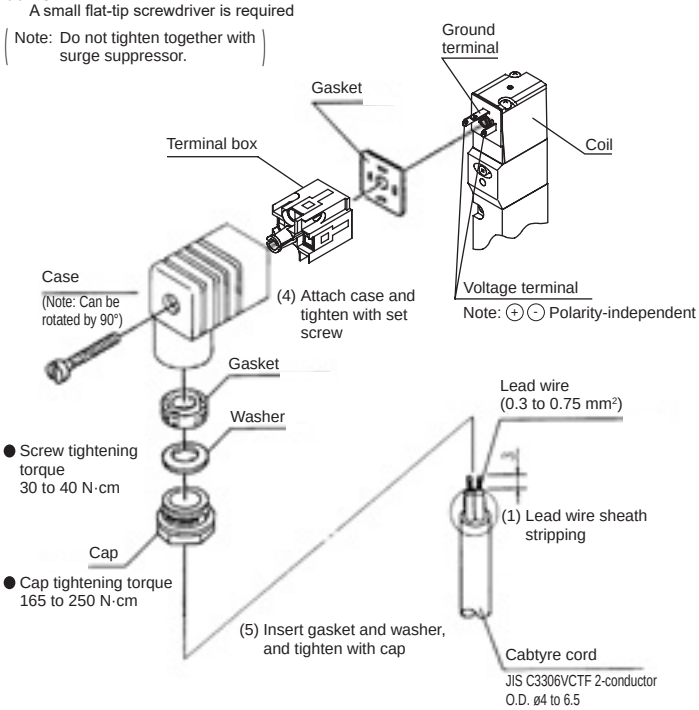

4KA/4KB

Pneumatic valve/master valve

Pilot operated 3, 5-port valve

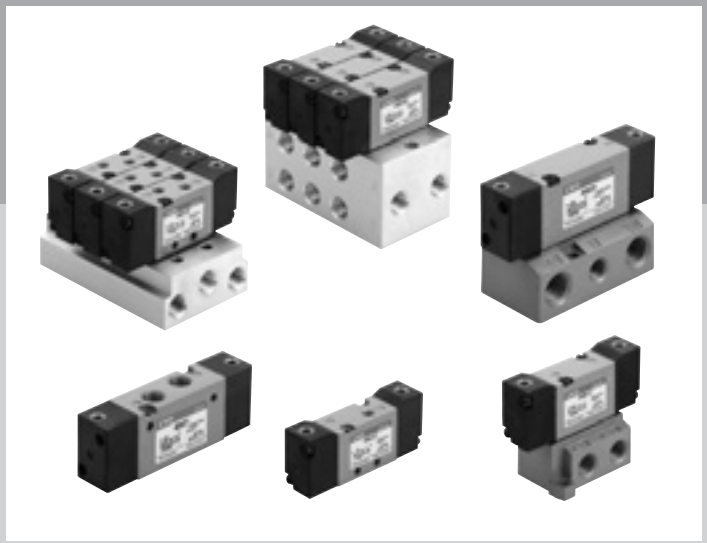

CONTENTS

Discrete valve

- Body piping (3KA1/4KA1 to 4) 1350
- Sub-plate piping (4KB1 to 4) 1356

Manifold

- Body piping (M3KA1/M4KA1 to 4) 1350
- Sub-plate piping (M4KB1 to 4) 1356

Technical data

(1) Terminal box wiring/connector connection method 1348
(2) Air pressure system selection guide 1362
⚠ Safety precautions 1363

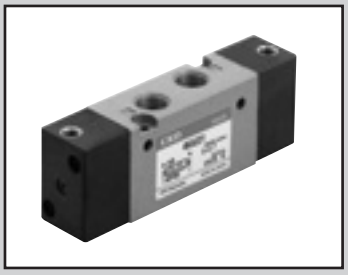

Master valve; body piping
Pilot operated 3, 5-port pneumatic valve

3KA1/4KA1/2/3/4 Series

● Cylinder bore size: ø20 to ø160

RoHS

JIS symbol

● 3-port valve

2-position NC single

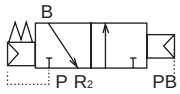

2-position NO single

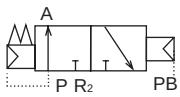

2-position double

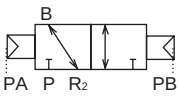

● 5-port valve

2-position single

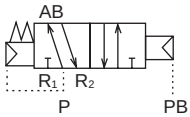

2-position double

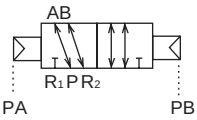

3-position all ports closed

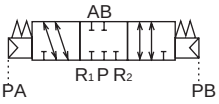

3-position A/B/R connection

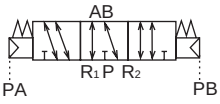

3-position P/A/B connection

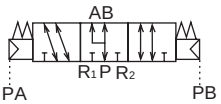

Common specifications

Item		Description
Valve and operation		Pilot operated soft spool valve
Working fluid		Compressed air
Max. working pressure	MPa	0.70 (≈100 psi, 7 bar)
Min. working pressure	MPa	Refer to section on working pressure in table below
Proof pressure	MPa	1.05 (≈150 psi, 10.5 bar)
Ambient temperature	°C	-5 (23°F) to 50 (122°F) (no freezing)
Fluid temperature	°C	5 (41°F) to 50 (122°F)
Lubrication		Not required
Vibration resistance	m/s^2	50 or less
Shock resistance	m/s^2	300 or less
Atmosphere		Cannot be used in corrosive gas environment.

Individual specifications: body piping (discrete valve/manifold)

1 MPa ≈ 145.0 psi, 1 MPa = 10 bar

Position Number of solenoids							Model No.		Specifications					
									*1 Port size					
2-position NC single	2-position NO single	2-position single	2-position double	3-position all ports closed	3-position A/B/R connection	3-position P/A/B connection	Series model No.		Air supply port: P	Cylinder port A/B	Exhaust Port R1, R2	Pilot port PA/PB *2	Working pressure MPa	Pilot pressure MPa
●							3KA1	3KA111	M5	M5	M5	M5	0.15 to 0.7	(0.6 x working pressure + 0.06) to 0.7
●								M3KA111	Rc,NPT,G 1/8		Rc,NPT,G 1/8			
	●							3KA1111	M5		M5			
	●							M3KA1111	Rc,NPT,G 1/8		Rc,NPT,G 1/8			
			●					3KA121	M5		M5		0 to 0.7	0.15 to 0.7
			●					M3KA121	Rc,NPT,G 1/8		Rc,NPT,G 1/8			
		●					4KA1	4KA111	M5	M5	M5	M5	0.15 to 0.7	(0.6 x working pressure + 0.06) to 0.7
		●						M4KA111	Rc,NPT,G 1/8		Rc,NPT,G 1/8			
			●					4KA121	M5		M5		0 to 0.7	0.15 to 0.7
			●					M4KA121	Rc,NPT,G 1/8		Rc,NPT,G 1/8			
				●				4KA131	M5		M5			0.2 to 0.7
				●				M4KA131	Rc,NPT,G 1/8		Rc,NPT,G 1/8			
					●			4KA141	M5		M5			
					●			M4KA141	Rc,NPT,G 1/8		Rc,NPT,G 1/8			
						●		4KA151	M5		M5			
						●		M4KA151	Rc,NPT,G 1/8		Rc,NPT,G 1/8			
		●					4KA2	4KA211	Rc,NPT,G 1/8	Rc 1/8 NPT 1/8 G 1/8	Rc,NPT,G 1/8	M5	0.15 to 0.7	(0.6 x working pressure + 0.06) to 0.7
		●						M4KA211	Rc,NPT,G 1/4		Rc,NPT,G 1/4			
			●					4KA221	Rc,NPT,G 1/8		Rc,NPT,G 1/8		0 to 0.7	0.2 to 0.7
			●					M4KA221	Rc,NPT,G 1/4		Rc,NPT,G 1/4			
				●				4KA231	Rc,NPT,G 1/8		Rc,NPT,G 1/8			
				●				M4KA231	Rc,NPT,G 1/4		Rc,NPT,G 1/4			
					●			4KA241	Rc,NPT,G 1/8		Rc,NPT,G 1/8			
					●			M4KA241	Rc,NPT,G 1/4		Rc,NPT,G 1/4			
						●		4KA251	Rc,NPT,G 1/8		Rc,NPT,G 1/8			
						●		M4KA251	Rc,NPT,G 1/4		Rc,NPT,G 1/4			
		●					4KA3	4KA311	Rc,NPT,G 1/4	Rc 1/4 NPT 1/4 G 1/4	Rc,NPT,G 1/4	M5	0.15 to 0.7	(0.6 x working pressure + 0.06) to 0.7
		●						M4KA311	Rc,NPT,G 3/8		Rc,NPT,G 3/8			
			●					4KA321	Rc,NPT,G 1/4		Rc,NPT,G 1/4		0 to 0.7	0.2 to 0.7
			●					M4KA321	Rc,NPT,G 3/8		Rc,NPT,G 3/8			
				●				4KA331	Rc,NPT,G 1/4		Rc,NPT,G 1/4			
				●				M4KA331	Rc,NPT,G 3/8		Rc,NPT,G 3/8			
					●			4KA341	Rc,NPT,G 1/4		Rc,NPT,G 1/4			
					●			M4KA341	Rc,NPT,G 3/8		Rc,NPT,G 3/8			
						●		4KA351	Rc,NPT,G 1/4		Rc,NPT,G 1/4			
						●		M4KA351	Rc,NPT,G 3/8		Rc,NPT,G 3/8			
		●					4KA4	4KA411	Rc,NPT,G 3/8	Rc 3/8 NPT 3/8 G 3/8	Rc,NPT,G 3/8	M5	0.15 to 0.7	(0.6 x working pressure + 0.06) to 0.7
		●						M4KA411	Rc,NPT,G 1/2		Rc,NPT,G 1/2			
			●					4KA421	Rc,NPT,G 3/8		Rc,NPT,G 3/8		0 to 0.7	0.2 to 0.7
			●					M4KA421	Rc,NPT,G 1/2		Rc,NPT,G 1/2			
				●				4KA431	Rc,NPT,G 3/8		Rc,NPT,G 3/8			
				●				M4KA431	Rc,NPT,G 1/2		Rc,NPT,G 1/2			
					●			4KA441	Rc,NPT,G 3/8		Rc,NPT,G 3/8			
					●			M4KA441	Rc,NPT,G 1/2		Rc,NPT,G 1/2			
						●		4KA451	Rc,NPT,G 3/8		Rc,NPT,G 3/8			
						●		M4KA451	Rc,NPT,G 1/2		Rc,NPT,G 1/2			

*1: There are options available with the port size other than those in the above table. Refer to the model No. display on page 1352.
*2: M5N, M5G available for manifold types.

Flow characteristics

Series	Model No.	Port size	C[dm³/(s·bar)]	b
3KA1	3KA111	M5	0.65	0.37
	M3KA111		0.69	0.29
	3KA1111		0.65	0.37
	M3KA1111		0.69	0.29
	3KA121		0.65	0.37
	M3KA121		0.69	0.29
4KA1	4KA111	M5	0.65	0.37
	M4KA111		0.69	0.29
	4KA121		0.65	0.37
	M4KA121		0.69	0.29
	4KA131		0.60	0.32
	M4KA131		0.69	0.29
	4KA141		0.68	0.39
	M4KA141		0.97	0.31
	4KA151		0.61	0.36
	M4KA151		0.73	0.30
4KA2	4KA211	Rc1/8	2.6	0.43
	M4KA211		2.6	0.25
	4KA221		2.6	0.43
	M4KA221		2.6	0.25
	4KA231		2.3	0.43
	M4KA231		2.4	0.32
	4KA241		2.9	0.34
	M4KA241		3.0	0.16
	4KA251		2.3	0.42
	M4KA251		2.4	0.31
4KA3	4KA311	Rc1/4	5.6	0.49
	M4KA311		5.6	0.39
	4KA321		5.6	0.49
	M4KA321		5.6	0.39
	4KA331		4.1	0.60
	M4KA331		4.1	0.51
	4KA341		4.1	0.62
	M4KA341		5.9	0.37
	4KA351		4.2	0.68
	M4KA351		4.1	0.56
4KA4	4KA411	Rc3/8	9.8	0.49
	M4KA411		9.7	0.29
	4KA421		9.8	0.49
	M4KA421		9.7	0.29
	4KA431		8.2	0.54
	M4KA431		8.3	0.40
	4KA441		11	0.50
	M4KA441		11	0.30
	4KA451		8.4	0.54
	M4KA451		8.7	0.46

*1: Effective cross-sectional area “S” and sonic conductance “C” are converted as S ≈ 5.0 x C.

3KA1/4KA1 to 4 Series

Master valve; body piping

How to order

● Single master valve

4KA2 1 1 - 06 -

● Single master valve for manifold (gasket, mounting screws attached)

4KA2 1 8 - 06

● Manifold

Operating classification master valve

M 4KA2 1 1 - 06 - - 2

Ⓑ Solenoid position

Ⓐ Model No. Ⓒ Port size Ⓓ Other options Ⓔ Station No.

Code	Description	Ⓐ Model No. 3KA1	4KA1	4KA2	4KA3	4KA4
Ⓑ Solenoid position						
1	2-position NC single	●				
11	2-position NO single	●				
1	2-position single		●	●	●	●
2	2-position double	●	●	●	●	●
3	3-position all ports closed		●	●	●	●
4	3-position A/B/R connection		●	●	●	●
5	3-position P/A/B connection		●	●	●	●
8	2/3 position mix manifold (*1)		●	●	●	●
Ⓒ Port size						
Port	P/A/B port (Discrete valve)	R1/R2 port (discrete valve) (1)=M5 (2)=Rc1/8 (3)=Rc1/4 (4)=Rc3/8				
	A/B port (Manifold)	P/R1/R2 port (manifold) (1)=Rc1/8 (2)=Rc1/4 (3)=Rc3/8 (4)=Rc1/2				
M5	M5	(1)	(1)			
06	Rc1/8			(2)		
08	Rc1/4				(3)	
10	Rc3/8					(4)
GS4	ø4 Push-in fitting	(1)	(1)			
GS6	ø6 Push-in fitting	(1)	(1)	(2)		
GS8	ø8 Push-in fitting			(2)	(3)	
GS10	ø10 Push-in fitting				(3)	(4)
GS12	ø12 Push-in fitting					(4)
Port	P/A/B port (Discrete valve)	R1/R2 port (discrete valve) (1)=M5 (5)=NPT1/8 (6)=NPT1/4 (7)=NPT3/8				
	A/B port (Manifold)	P/R1/R2 port (manifold) (1)=NPT1/8 (5)=NPT1/4 (6)=NPT3/8 (7)=NPT1/2				
M5N	M5	(1)	(1)			
06N	NPT1/8			(5)		
08N	NPT1/4				(6)	
10N	NPT3/8					(7)
Port	P/A/B port (Discrete valve)	R1/R2 port (discrete valve) (1)=M5 (8)=G1/8 (9)=G1/4 (11) =G3/8				
	A/B port (Manifold)	P/R1/R2 port (manifold) (1)=G1/8 (8) =G1/4 (9)=G3/8 (10)=G1/2				
M5G	M5	(1)	(1)			
06G	G1/8			(8)		
08G	G1/4				(9)	
10G	G3/8					(10)
Ⓓ Other options						
Blank	None	●	●	●	●	●
P	Mounting plate (Dedicated for 2-position single of single master valve)	●	●	●	●	●
Ⓔ Station No.						
2 to 15	2 stations to 15 stations				●	●
2 to 20	2 stations to 20 stations	●	●	●		

[Example of model No.]

4KA311-08-P

Ⓐ Model: 4KA3
Ⓑ Solenoid position : 2-position single
Ⓒ Port size : Rc1/4
Ⓓ Other options : Mounting plate

⚠ Precautions for model No. selection

*1: 8 is appropriate for the manifold assembly.
Read the following for how to list the combination.
*2: With regard to the printed model No., although the model No. when placing an order is "4KA□□8", the model No. listed on the product name plate will be "4KA□□1".

[Mix manifold]

● How to list combination descriptions
When selecting a combination manifold (write 8 from Ⓑ), list the code (refer to table 1) for required functions and the arrangement No. (numbering up to specified station No. with left side as 1) in the field for remarks below the normal model No. display as shown in the example.

[Table 1]

Code	Function
S1	2-position single
S2	2-position double
S3	3-position all ports closed
S4	3-position A/B/R connection
S5	2-position P/A/B connection
MP	Masking plate

1	2	3	4	5	6	7
(S1) 2-position single	(S2) 2-position double	(S3) 3-position all ports closed	(S3) 3-position all ports closed	(S2) 2-position double	(S1) 2-position single	(S4) 3-position A/B/R connection

S1	S2	S3	S4	S5	MP
2	2	2	1	0	0

Example

The model No. when a combination manifold (7 stations) of an arrangement such as that on the left is configured with 4KA3 and A/B port: Rc1/8, upwards piping

M4KA381-06-7- 2 2 2 1 0 0

S1=1, 6 S2=2, 5 S3=3, 4 S4=7
Code Position

Dimensions

3-port valve

3KA111

● 2-position single NC

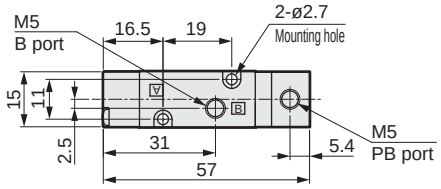

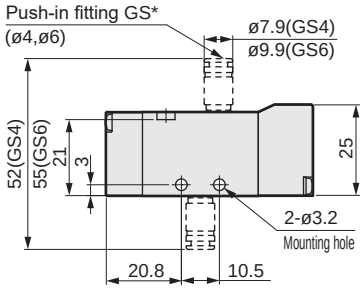

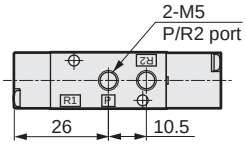

3KA1111

● 2-position single NO

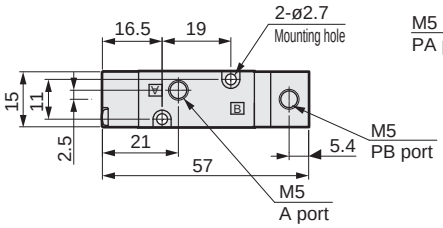

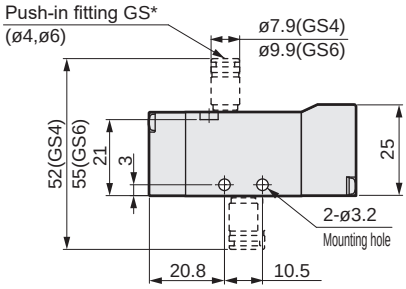

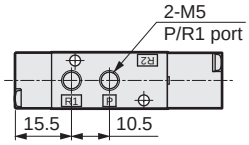

3KA121

● 2-position double

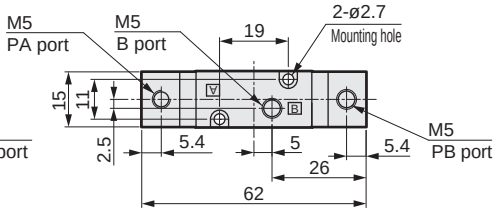

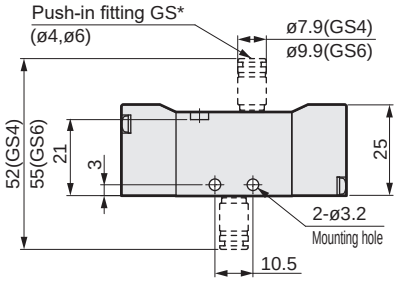

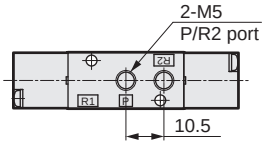

5-port valve

4KA111

● 2-position single

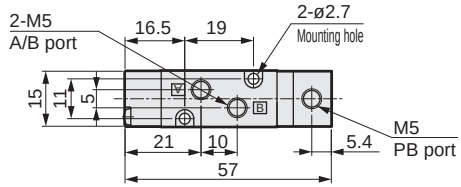

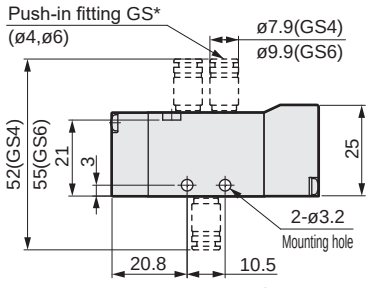

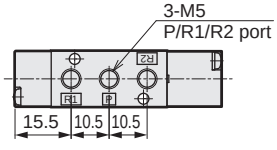

4KA1 2 3 4 5 1

● 2-position double/3 position

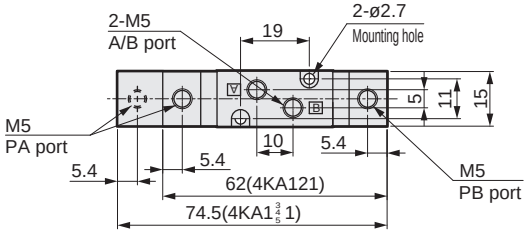

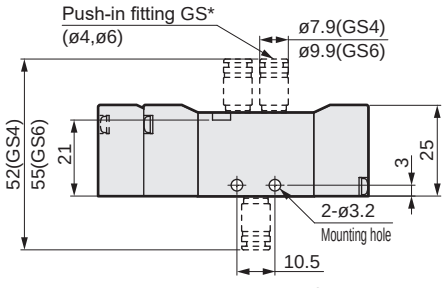

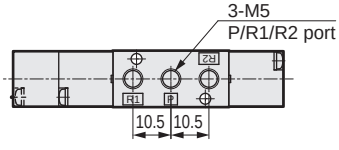

* Refer to pages 1272 and 1274 for type with mounting plate (P).

Dimensions

4KA211

● 2-position single

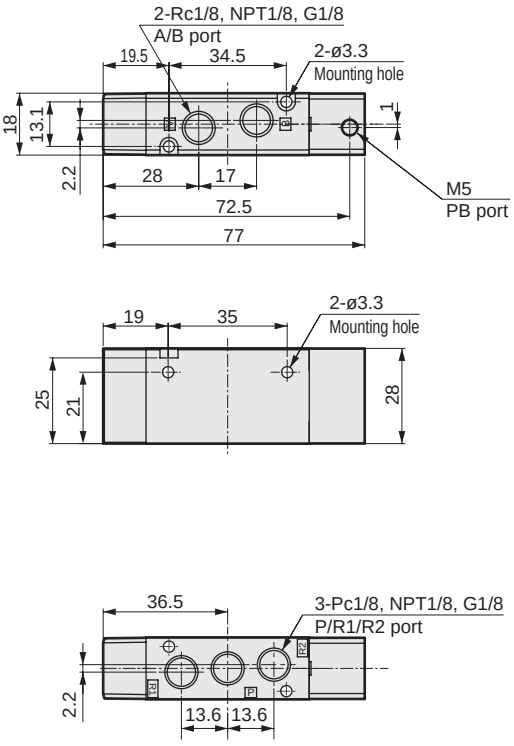

4KA2 2 3 4 5 1

● 2-position double/3 position

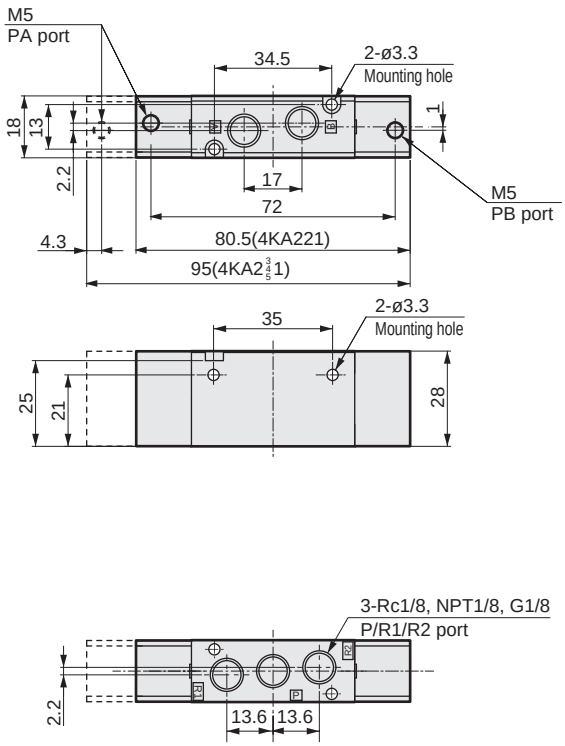

4KA311

● 2-position single

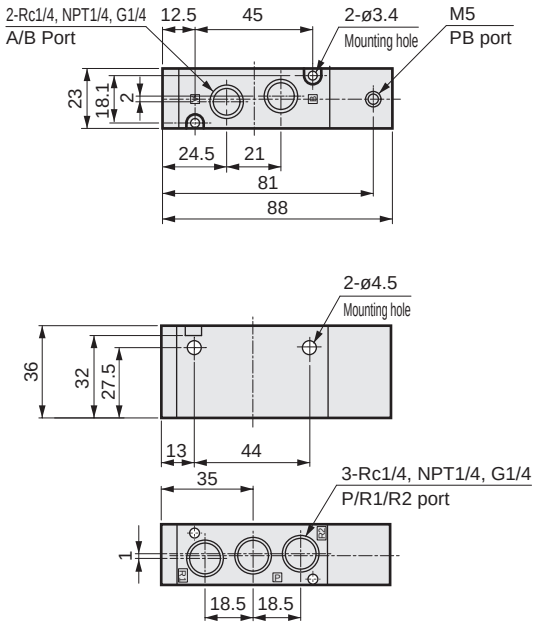

4KA3 2 3 4 5 1

● 2-position double/3 position

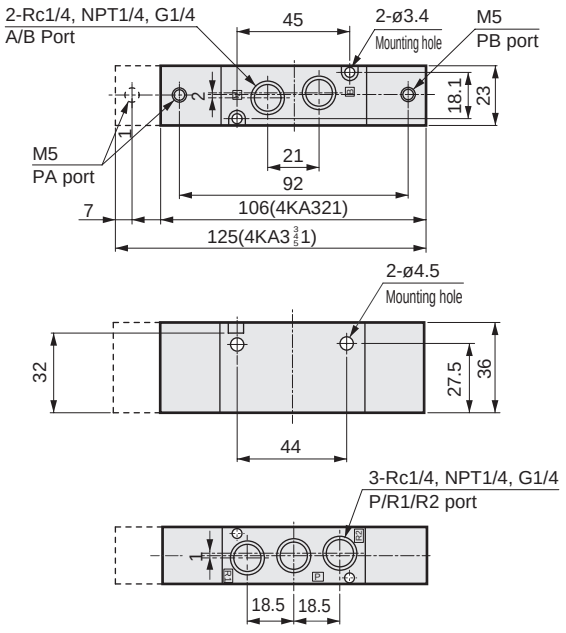

Dimensions

4KA411

● 2-position single

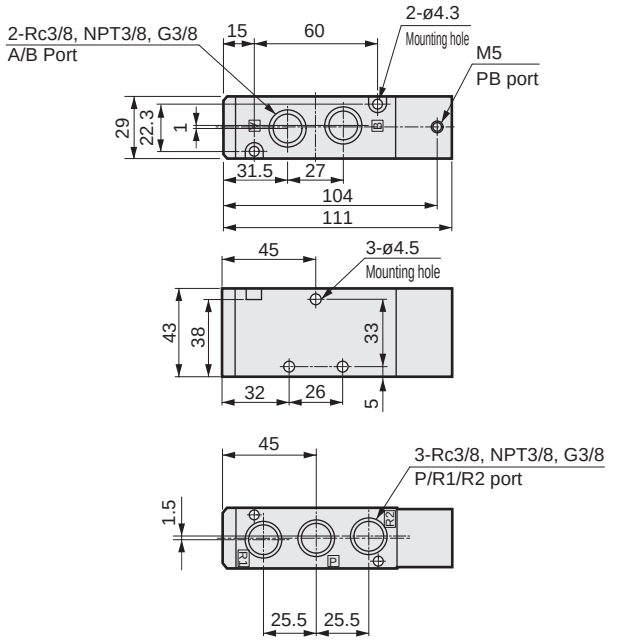

4KA4 2 3 4 5 1

● 2-position double/3 position

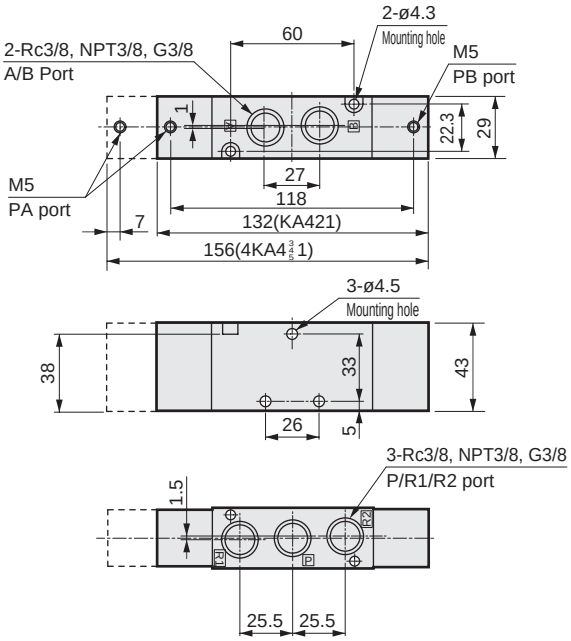

* Refer to pages 1276, 1278, 1280 for type with mounting plate (P).

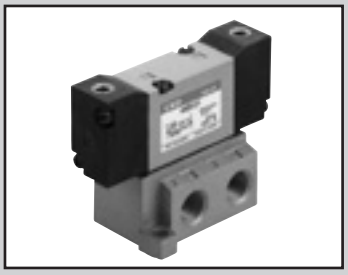

Master valve sub-plate piping
Pilot operated 3, 5-port pneumatic valve

4KB1/2/3/4 Series

● Cylinder bore size: ø20 to ø160

RoHS

JIS symbol

● 5-port valve
2 position single

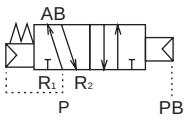

2-position double

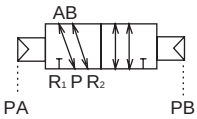

3-position all ports Block

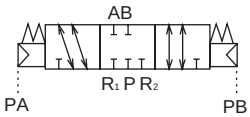

3-position A/B/R connection

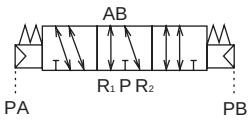

3-position P/A/B connection

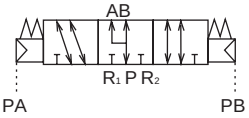

4KB1 only R1, R2
Common exhaust

Common specifications

Item	Description
Valve and operation	Pilot operated soft spool valve
Working fluid	Compressed air
Max. working pressure MPa	0.70
Min. working pressure MPa	Refer to section on working pressure in table below
Proof pressure MPa	1.05
Ambient temperature °C	−5 to 50
Fluid temperature °C	5 to 50
Lubrication	Not required
Vibration resistance m/s^2	50 or less
Shock resistance m/s^2	300 or less
Atmosphere	Cannot be used in corrosive gas environment.

Individual specifications: sub-plate piping (discrete valve/manifold)

Position No. of solenoids					Model No.		Specifications					
							*1 Port size					
2-position single	2-position double	3-position all ports closed	3-position A/B/R connection	3-position P/A/B connection	Series Model No.		Air supply port P	Cylinder port A/B	Exhaust port R1/R2	Pilot port PA/PB	Working pressure MPa	Pilot pressure MPa
●					4KB1	4KB111	Rc,NPT,G 1/8	Rc, NPT, G 1/8	Rc,NPT,G 1/8	M5	0.15 to 0.7	(0.6 x working pressure + 0.06) to 0.7
●						M4KB111		M5/Rc, NPT, G 1/8				
	●					4KB121		Rc, NPT, G 1/8			0 to 0.7	0.15 to 0.7
	●					M4KB121		M5/Rc, NPT, G 1/8				
		●				4KB131		Rc, NPT, G 1/8				0.2 to 0.7
		●				M4KB131		M5/Rc, NPT, G 1/8				
			●			4KB141		Rc, NPT, G 1/8				
			●			M4KB141		M5/Rc, NPT, G 1/8				
				●		4KB151		Rc, NPT, G 1/8				
				●		M4KB151		M5/Rc, NPT, G 1/8				
●					4KB2	4KB211	Rc,NPT,G 1/8	Rc,NPT,G 1/8	Rc,NPT,G 1/4	M5	0.15 to 0.7	(0.6 x working pressure + 0.06) to 0.7
●						M4KB211	Rc,NPT,G 1/4					
	●					4KB221	Rc,NPT,G 1/8				0 to 0.7	0.2 to 0.7
	●					M4KB221	Rc,NPT,G 1/4					
		●				4KB231	Rc,NPT,G 1/8					
		●				M4KB231	Rc,NPT,G 1/4					
			●			4KB241	Rc,NPT,G 1/8					
			●			M4KB241	Rc,NPT,G 1/4					
				●		4KB251	Rc,NPT,G 1/8					
				●		M4KB251	Rc,NPT,G 1/4					
●					4KB3	4KB311	Rc,NPT,G 1/4	Rc,NPT,G 1/4	Rc,NPT,G 1/4	M5	0.15 to 0.7	(0.6 x working pressure + 0.06) to 0.7
●						M4KB311	Rc,NPT,G 3/8		Rc,NPT,G 3/8			
	●					4KB321	Rc,NPT,G 1/4		Rc,NPT,G 1/4		0 to 0.7	0.2 to 0.7
	●					M4KB321	Rc,NPT,G 3/8		Rc,NPT,G 3/8			
		●				4KB331	Rc,NPT,G 1/4		Rc,NPT,G 1/4			
		●				M4KB331	Rc,NPT,G 3/8		Rc,NPT,G 3/8			
			●			4KB341	Rc,NPT,G 1/4		Rc,NPT,G 1/4			
			●			M4KB341	Rc,NPT,G 3/8		Rc,NPT,G 3/8			
				●		4KB351	Rc,NPT,G 1/4		Rc,NPT,G 1/4			
				●		M4KB351	Rc,NPT,G 3/8		Rc,NPT,G 3/8			
●					4KB4	4KB411	Rc,NPT,G 3/8	Rc,NPT,G 3/8	Rc,NPT,G 3/8	M5	0.15 to 0.7	(0.6 x working pressure + 0.06) to 0.7
●						M4KB411	Rc,NPT,G 1/2		Rc,NPT,G 1/2			
	●					4KB421	Rc,NPT,G 3/8		Rc,NPT,G 3/8		0 to 0.7	0.2 to 0.7
	●					M4KB421	Rc,NPT,G 1/2		Rc,NPT,G 1/2			
		●				4KB431	Rc,NPT,G 3/8		Rc,NPT,G 3/8			
		●				M4KB431	Rc,NPT,G 1/2		Rc,NPT,G 1/2			
			●			4KB441	Rc,NPT,G 3/8		Rc,NPT,G 3/8			
			●			M4KB441	Rc,NPT,G 1/2		Rc,NPT,G 1/2			
				●		4KB451	Rc,NPT,G 3/8		Rc,NPT,G 3/8			
				●		M4KB451	Rc,NPT,G 1/2		Rc,NPT,G 1/2			

*1: There are options available with the port size other than those in the above table. Refer to the model No. display on page 1358.

Flow characteristics

Series	Model No.	Port size	C[dm^3/(s·bar)]	b
4KB1	4KB111	Rc1/8	0.89	0.44
	M4KB111	M5/Rc1/8	0.71	0.25
	4KB121	Rc1/8	0.89	0.44
	M4KB121	M5/Rc1/8	0.71	0.25
	4KB131	Rc1/8	0.63	0.50
	M4KB131	M5/Rc1/8	0.60	0.23
	4KB141	Rc1/8	1.2	0.29
	M4KB141	M5/Rc1/8	0.81	0.25
	4KB151	Rc1/8	0.75	0.39
	M4KB151	M5/Rc1/8	0.67	0.32
4KB2	4KB211	Rc1/8	2.7	0.24
	M4KB211		2.1	0.13
	4KB221		2.7	0.24
	M4KB221		2.1	0.13
	4KB231		2.4	0.29
	M4KB231		1.8	0.11
	4KB241		3	0.27
	M4KB241		2	0.17
	4KB251		2.4	0.34
	M4KB251		1.8	0.23
4KB3	4KB311	Rc1/4	6.3	0.26
	M4KB311		4.5	0.11
	4KB321		6.3	0.26
	M4KB321		4.5	0.11
	4KB331		5.6	0.27
	M4KB331		4.4	0.21
	4KB341		6.6	0.20
	M4KB341		4.8	0.18
	4KB351		5.9	0.27
	M4KB351		4.3	0.20
4KB4	4KB411	Rc3/8	12	0.24
	M4KB411		8.9	0.22
	4KB421		12	0.24
	M4KB421		8.9	0.22
	4KB431		11	0.27
	M4KB431		8.9	0.24
	4KB441		13	0.21
	M4KB441		9.4	0.23
	4KB451		10	0.22
	M4KB451		8.6	0.20

*1: Effective cross-sectional area “S” and sonic conductance “C” are converted as S ≈ 5.0 x C.

4KB1 to 4 Series

Master valve; sub-plate piping

How to order

● Single master valve

4KB2 1 1-06

● Single master valve for manifold (gasket, mounting screws included)

4KB2 1 8-00

● Manifold

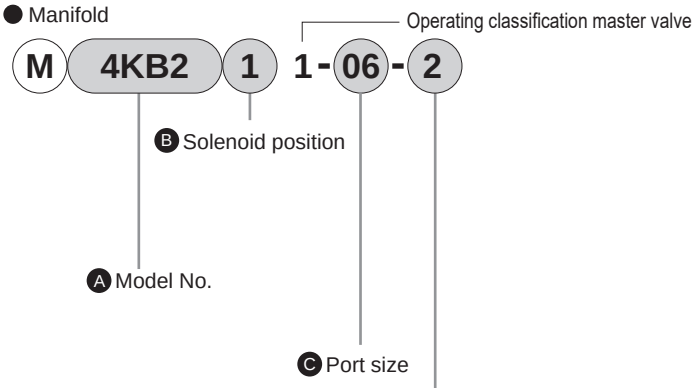

[Example of model No.]

4KB311-08

A Model : 4KB3
B Solenoid position : 2-position single
C Port size : Rc1/4

Precautions for model No. selection

*1: 8 is suited to manifold combination. Read the following for how to list the combination.
*2: H6 and H8 can be manufactured with up to 10 stations.

Code	Description	A Model No. 4KB1	4KB2	4KB3	4KB4
B Solenoid position					
1	2-position single	●	●	●	●
2	2-position double	●	●	●	●
3	3-position all ports closed	●	●	●	●
4	3-position A/B/R connection	●	●	●	●
5	3-position P/A/B connection	●	●	●	●
8	2-position/3-position mix manifold (*1)	●	●	●	●
C Port size					
Port	Port P/A/B (Discrete valve)	Port R1/R2 (discrete valve) (1)= Rc1/8 (2)= Rc1/4 (3)= Rc3/8 (4)= Rc1/2			
06	Rc1/8	(1)	(2)		
08	Rc1/4		(2)	(2)	
10	Rc3/8			(3)	(3)
15	Rc1/2				(4)
Port	Port A/B (Manifold)	Port P/R1/R2 (manifold) (1)= Rc1/8 (2)= Rc1/4 (3)= Rc3/8 (4)= Rc1/2			
M5	M5 *2	(1)			
06	Rc1/8	(1)	(2)		
08	Rc1/4		(2)	(3)	
10	Rc3/8			(3)	(4)
15	Rc1/2				(4)
M5Y	M5 (rear piping)	(1)			
06 Y	Rc1/8 (rear piping)		(2)		
08 Y	Rc1/4 (rear piping)			(3)	
10 Y	Rc3/8 (rear piping)				(4)
H 6	ø6 push-in fitting (*2)	(1)	(2)		
H 8	ø8 push-in fitting (*2)		(2)	(3)	
H 10	ø10 push-in fitting			(3)	(4)
H 12	ø12 push-in fitting				(4)
Port	Port P/A/B (Discrete valve)	Port R1/R2 (discrete valve) (5)= NPT1/8 (6)= NPT1/4 (7)= NPT3/8 (8)= NPT1/2			
06N	NPT1/8	(5)	(6)		
08N	NPT1/4		(6)	(6)	
10N	NPT3/8			(7)	(7)
15N	NPT1/2				(8)
Port	Port A/B (Manifold)	Port P/R1/R2 (manifold) (5)= NPT1/8 (6)= NPT1/4 (7)= NPT3/8 (8)= NPT1/2			
M5N	M5	(5)			
06N	NPT1/8	(5)	(6)		
08N	NPT1/4		(6)	(7)	
10N	NPT3/8			(7)	(8)
15N	NPT1/2				(8)
06YN	NPT1/8 (rear piping)		(6)		
08YN	NPT1/4 (rear piping)			(7)	
10YN	NPT3/8 (rear piping)				(8)
Port	Port P/A/B (Discrete valve)	Port R1/R2 (discrete valve) (9)= G1/8 (10)= G1/4 (11)= G3/8 (12)= G1/2			
06G	G1/8	(9)	(10)		
08G	G1/4		(10)	(10)	
10G	G3/8			(11)	(11)
15G	G1/2				(12)
Port	Port A/B (Manifold)	Port P/R1/R2 (manifold) (9)= G1/8 (10)= G1/4 (11)= G3/8 (12)= G1/2			
M5G	M5	(9)			
06G	G1/8	(9)	(10)		
08G	G1/4		(10)	(11)	
10G	G3/8			(11)	(12)
15G	G1/2				(12)
06 YG	G1/8 (rear piping)		(10)		
08 YG	G1/4 (rear piping)			(11)	
10 YG	G3/8 (rear piping)				(12)
D Station No.					
2 to 12	2 to 12 stations				●
2 to 15	2 to 15 stations			●	
2 to 20	2 to 20 stations	●	●		

[Mix manifold]

● How to list combination content

When selecting a combination manifold (write 8 from B), list the code (refer to table 1) for required functions and the layout No. (numbering up to specified station No. with left side as 1) in the field for remarks below the normal model No. display as shown in the example.

[Table 1]

Code	Function
S1	2-position single
S2	2-position double
S3	3-position all ports closed
S4	3-position A/B/R connection
S5	2-position P/A/B connection
MP	Masking plate

1	2	3	4	5	6	7
2-position single	2-position double	3-position All ports closed	3-position All ports closed	2-position double	2-position single	3-position A/B/R connection
(S1)	(S2)	(S3)	(S3)	(S2)	(S1)	(S4)

S1	S2	S3	S4	S5	MP
2	2	2	1	0	0

Example

Model No. when a combination manifold (7 stations) of an array such as at left is configured with 4KB3 and port A/B: Rc1/8, side piping:

M4KB381-06-7- 2 2 2 1 0 0

S1 = 1, 6 S2 = 2, 5 S3 = 3, 4 S4 = 7

Code Position

● With a mix manifold, when using 10 or more actuators of the same model No., specify using the codes in the table below.

Actuator quantity	10	11	12	13	14	15	16	17	18	19
Code	A	B	C	D	E	F	G	H	I	J

Dimensions

4KB111

● 2-position single

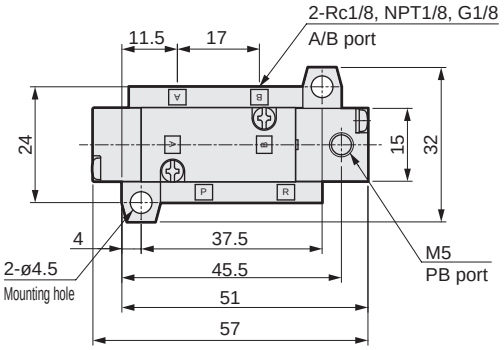

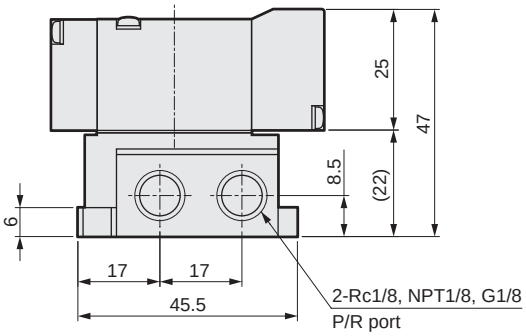

4KB1$^{2}_{3}_{4}_{5}$1

● 2-position double/3 position

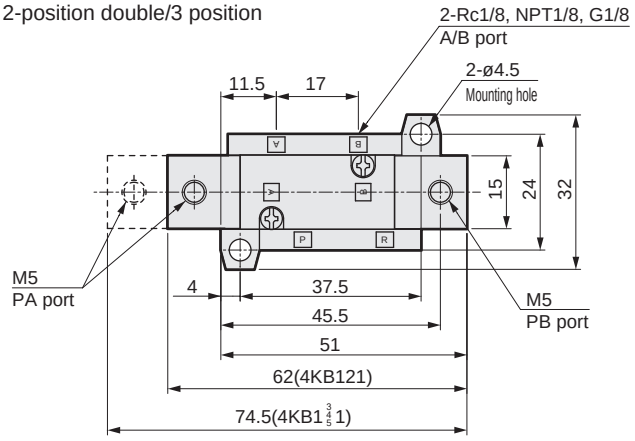

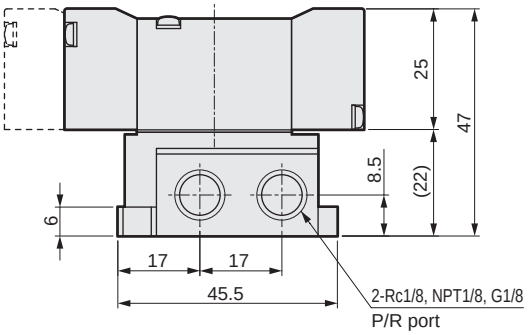

4KB211

● 2-position single

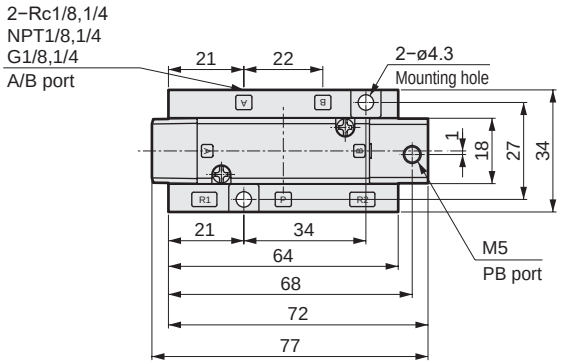

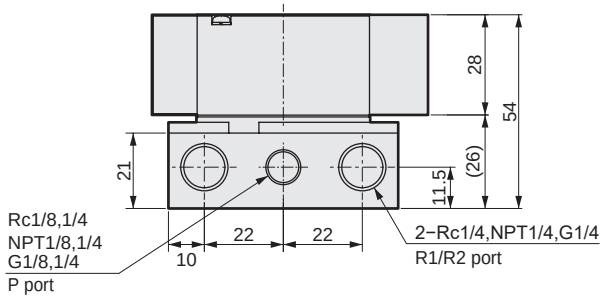

4KB2$^{2}_{3}_{4}_{5}$1

● 2-position double/3 position

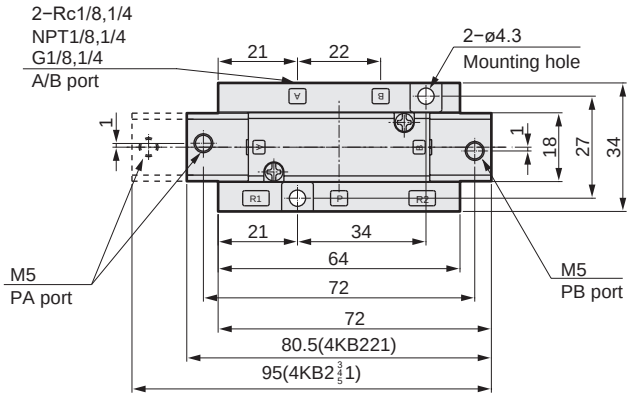

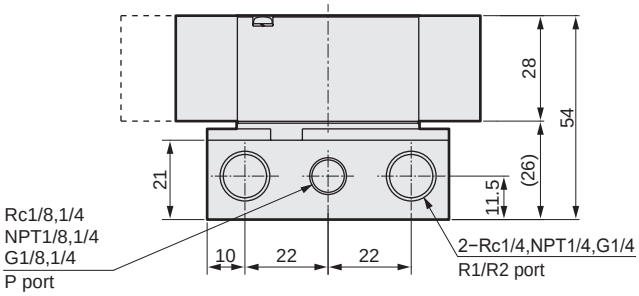

Dimensions

4KB311

● 2-position single

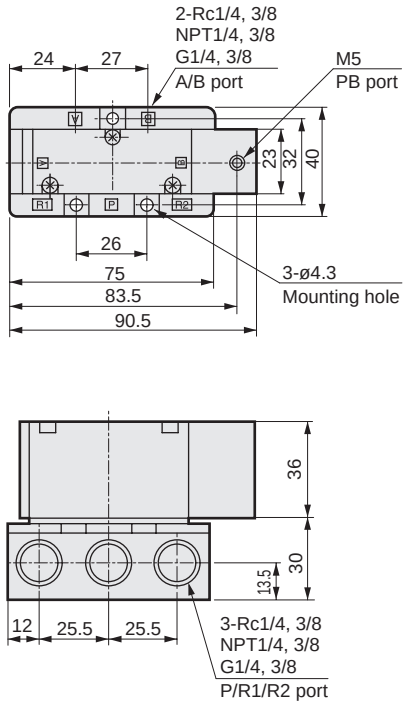

4KB3$^{2}_{3}_{4}_{5}$1

● 2-position double/3 position

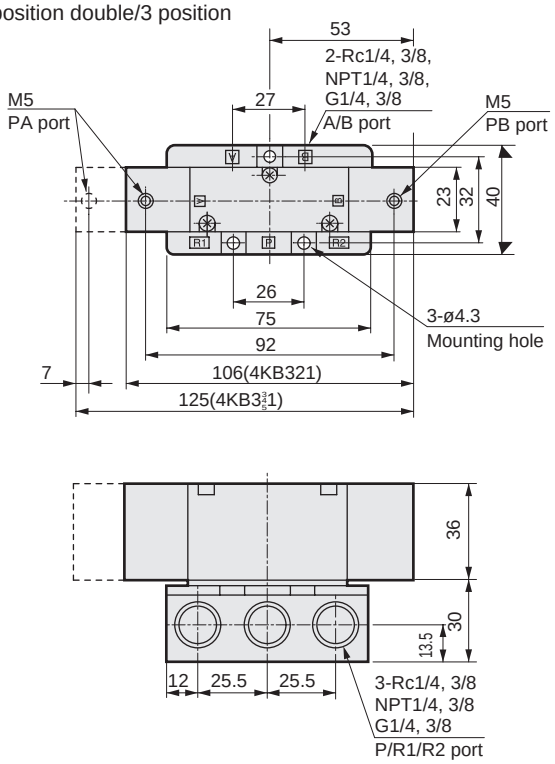

4KB411

● 2-position single

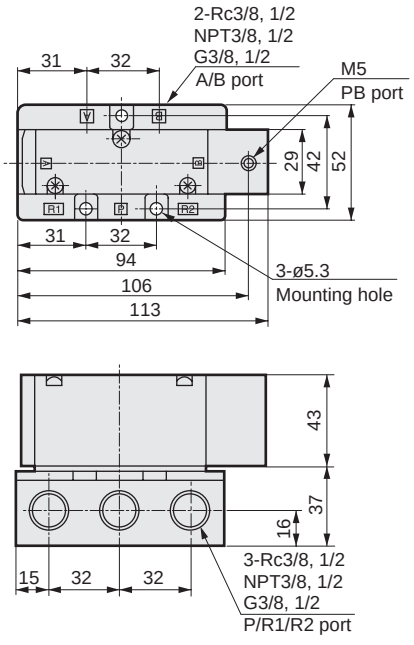

4KB4$^{2}_{3}_{4}_{5}$1

● 2-position double/3 position

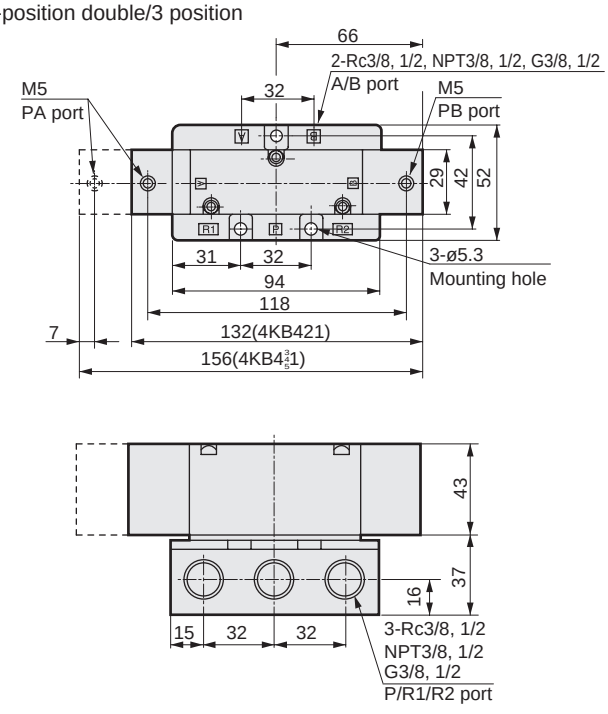

The cylinder average speed is obtained from the combination of 4K$^{A}_{B}$ Series and piping system.

Example: For the system when moving SCA2-63 with a speed of 500 mm/sec, system "4" devices can be selected. For clean air system components, select system "4" devices with which a required flow rate of 520 ℓ/min or more will flow.

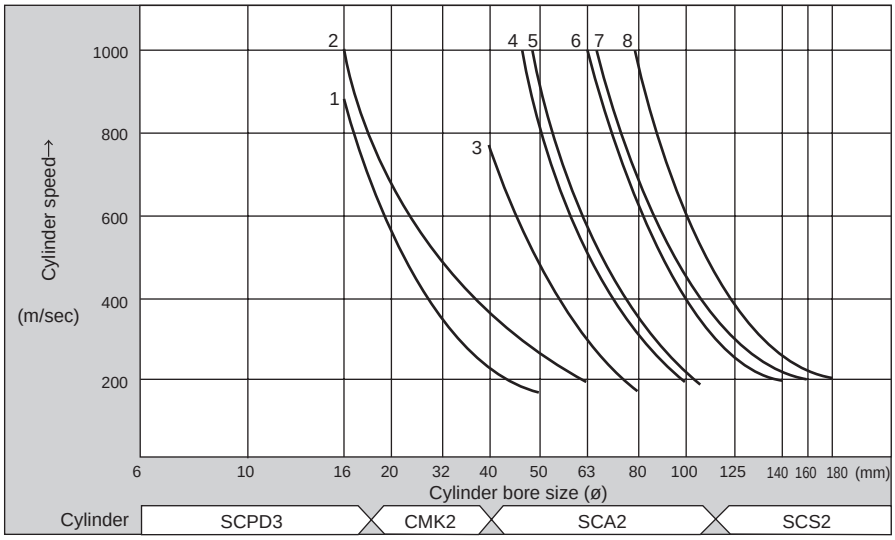

Standard system table

System No.	Valve	Speed controller	Silencer	Piping (1m)	Composite effective sectional area (mm^2)	Required flow rate (ℓ/min)
1	4KA1$^{1}_{2}$0-M5	SC-M5-S	SL-M5	ø4xø2.5	1.6	115
2	4KB1$^{1}_{2}$0-06	SC1-6	SLW-6S	ø6xø4	3.2	215
3	4KA2$^{1}_{2}$0-06	SC1-6	SLW-6S	ø6xø4	4.8	346
4	4KB2$^{1}_{2}$0-08	SC1-8	SLW-8S	ø8xø5.7	8	581
5	4KA3$^{1}_{2}$0-08	SC1-8	SLW-8S	ø8xø5.7	9.1	660
6	4KB3$^{1}_{2}$0-10	SC1-10	SLW-10L	ø10xø7.2	16.5	1285
7	4KA4$^{1}_{2}$0-10	SC1-10	SLW-10L	ø10xø7.2	19	1289
8	4KB4$^{1}_{2}$0-15	SC1-15	SLW-15A	ø12xø8.9	25.8	1749

*1: The required flow rate is the condition for when the pressure is 0.5 MPa.
*2: Effective cross-sectional area “S” and sonic conductance “C” are converted as S ≈ 5.0 x C.

Clean air system components

Part name	Model No.	Port size	Max. flow rate ℓ/min (ANR)
F.R.L. combination	C1000-6-W	Rc$^{1}/_{8}$	450
	C1000-8-W	Rc$^{1}/_{4}$	630
	C3000-8-W	Rc$^{1}/_{4}$	1280
	C3000-10-W	Rc$^{3}/_{8}$	1750
	C4000-8-W	Rc$^{1}/_{4}$	1430
	C4000-10-W	Rc$^{3}/_{8}$	2400
	C4000-15-W	Rc$^{1}/_{2}$	3000
	C8000-20-W	Rc$^{3}/_{4}$	7000
	C8000-25(-A32)-W	Rc1(Rc1$^{1}/_{4}$)	7500
F.R. unit	W1000-6-W	Rc$^{1}/_{8}$	830
	W1000-8-W	Rc$^{1}/_{4}$	1150
	W3000-8-W	Rc$^{1}/_{4}$	2150
	W3000-10-W	Rc$^{3}/_{8}$	2430
	W4000-8-W	Rc$^{1}/_{4}$	2500
	W4000-10-W	Rc$^{3}/_{8}$	4350
	W4000-15(-A20)-W	Rc$^{1}/_{2}$, Rc$^{3}/_{4}$	4750
	W8000-20-W	Rc$^{3}/_{4}$	10000
	W8000-25(-A32)-W	Rc1(Rc1$^{1}/_{4}$)	10000
Air filter (F)	F1000-6-W	Rc$^{1}/_{8}$	460
	F1000-8-W	Rc$^{1}/_{4}$	610
	F3000-8-W	Rc$^{1}/_{4}$	1230
	F3000-10-W	Rc$^{3}/_{8}$	1500
	F4000-8-W	Rc$^{1}/_{4}$	1320
	F4000-10-W	Rc$^{3}/_{8}$	2140
	F4000-15(-A20)-W	Rc$^{1}/_{2}$ (Rc$^{3}/_{4}$)	3000
	F8000-20-W	Rc$^{3}/_{4}$	6400
	F8000-25(-A32)-W	Rc1(Rc1$^{1}/_{4}$)	6800

Part name	Model No.	Port size	Max. flow rate ℓ/min (ANR)
Regulator (R)	R1000-6-W	Rc$^{1}/_{8}$	770
	R1000-8-W	Rc$^{1}/_{4}$	1350
	R3000-8-W	Rc$^{1}/_{4}$	2000
	R3000-10-W	Rc$^{3}/_{8}$	2600
	R4000-8-W	Rc$^{1}/_{4}$	2500
	R4000-10-W	Rc$^{3}/_{8}$	4400
	R4000-15-W	Rc$^{1}/_{2}$ (Rc$^{3}/_{4}$)	5000
	R8000-20-W	Rc$^{3}/_{4}$	14000
	R8000-25(-A32)-W	Rc1(Rc1$^{1}/_{4}$)	11000
Lubricator (L)	L1000-6-W	Rc$^{1}/_{8}$	550
	L1000-8-W	Rc$^{1}/_{4}$	700
	L3000-8-W	Rc$^{1}/_{4}$	1100
	L3000-10-W	Rc$^{3}/_{8}$	2250
	L4000-8-W	Rc$^{1}/_{4}$	1000
	L4000-10-W	Rc$^{3}/_{8}$	1700
	L4000-15(-A20)-W	Rc$^{1}/_{2}$ (Rc$^{3}/_{4}$)	2700
	L8000-20-W	Rc$^{3}/_{4}$	6300
	L8000-25(-A32)-W	Rc1(Rc1$^{1}/_{4}$)	10000

(Note)
Max. flow rate: Flow rates for FRL, FR, and R when primary pressure is 0.7 MPa, set pressure is 0.5 MPa, and pressure drop is 0.1 MPa. Flow rate for F when primary pressure is 0.7 MPa and pressure drop is 0.02 MPa. Flow rate for L when primary pressure is 0.5 MPa and pressure drop is 0.03 MPa.

Pneumatic components

Safety Precautions

Be sure to read this section before use.
Refer to Intro Page 59 for general precautions for using valves.

Product-specific cautions: Pilot operated 3, 4, 5-port valve 4K Series

Design/selection

1. Surge suppressor

⚠ CAUTION

■ The surge suppressor attached with the solenoid valve is intended to protect the output contacts for the solenoid valve drive. There is no significant protection for the other peripheral devices, and devices could be damaged or could malfunction due to a surge. As well, surges generated by other devices may be absorbed and cause damage such as burning. When using the surge suppressor built-in (electrical connection code: L, LS, C*, D*), be aware of the following points.

(1) The surge suppressor functions to limit solenoid valve surge voltage, which can reach several hundred volts, to a low voltage level that the output contact can withstand. Depending on the output circuit used, this may be insufficient and could result in damage or malfunction. Check whether the surge suppressor can be used within the surge voltage limit of the solenoid valve in use, the output device's withstand pressure and circuit structure, and by the degree of return delay time. When necessary, provide other surge countermeasures. The inverse voltage surge generated when OFF can be suppressed to the following levels.

Specification voltage	Inverse voltage when OFF
12 VDC	Approx. 27 V
24 VDC	Approx. 47 V

(2) If the output unit is an NPN, a surge voltage equaling the voltage shown in the table above plus the power supply voltage may be applied to the output transistor. Make sure to implement a contact protection circuit to avoid the risk.

[Output transistor protection circuit: Installation example 1]

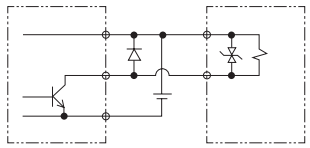

[Output transistor protection circuit: Installation example 2]

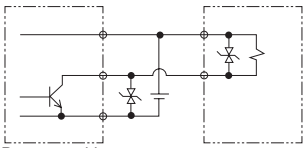

(3) If another device or solenoid valve is connected in parallel to the solenoid valve, the inverse voltage surge generated when the valve is OFF would apply to those devices. Even in the case of a solenoid valve with 24 VDC surge suppressor, a surge voltage may reach negative tens of volts for some models. This inverse voltage may cause damage or malfunction to other components connected in parallel. Avoid parallel connection of devices susceptible to inverse polarity voltages, e.g., LED indicators. When driving several solenoid valves in parallel, the surge from other solenoid valves may enter the surge suppressor of one solenoid valve, and it may burn depending on the current value. When driving several solenoid valves with surge suppressors in parallel, surge current could concentrate at the surge suppressor with the lowest limit voltage and cause similar burning. Due to the variations in surge suppressor limit voltage that exist even among solenoid valves of the same model No., in the worst case the surge suppressor may burn out. Avoid driving several solenoid valves in parallel.

(4) The surge suppressor incorporated in the solenoid valve will often be short-circuited if it is damaged by overvoltage or overcurrent from other solenoid valves. Where there is a failed surge suppressor, if a large current flows when the output is ON, in the worst case scenario, the output circuit or solenoid valve could be damaged or ignited. Do not continue energizing in a state of failure. Additionally, to prevent large currents from continuing to flow, connect an overcurrent protection circuit to the power supply and drive circuit, or use a power supply with overcurrent protection.

Use/maintenance

⚠ CAUTION

■ Do not block the PR port.
Pilot pressure will not be discharged and will fail to operate.

■ Continuous energizing for long periods may accelerate degradation of the solenoid valve. Consult with CKD when energizing this device continuously.
Furthermore, use caution under the following working conditions, as with continuous energization:
· When performing continuous energizing for a long period of time or when the energized time in a single day will be longer than the non-energized time Install with an eye to heat dissipation.

■ The service life may become shorter when using AC voltage with dry air (atmospheric dew point of -20°C or less). Use of DC voltage is recommended with dry air. Consult with CKD when using AC voltage.

MEMO

Pilot operated 5-port valve 4F Series

Overview

The 4F series 5-port valve is compatible with no lubrication and hard use. With excellent total performance, this series will satisfy the needs in a variety of fields with a wide selection.
Suitable for operating cylinders of ø6 to ø250

Features

Resource saving

Use of special soft packing. Can be used with no lubrication.

Compatible with long term use

The soft spool method with proven performance has been employed. Service life is long.

Compatible with low frequency use

The soft spool method with proven performance has been employed. As initial operation is smooth upon use after being out of use for long periods, this series supports low frequency use.

Resistant to dust

Page

Discrete/individual wiring manifold
4F/M4F Series 1367

Master valve
4F/M4F Series 1453

Technical data
(1) Terminal box wiring/connector connection method 1452
⚠ Safety precautions 1464

4F

Pneumatic valve

Pilot operated 5-port valve

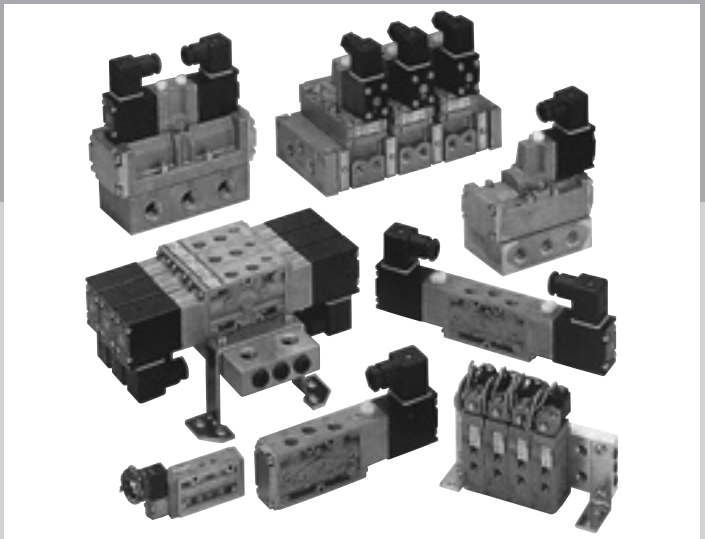

CONTENTS

Series variation	1368
Electrical connections list (wire connections/circuit)	1370
Discrete valve	
● Body piping (4F0/1/2/3)	1372
● Sub-plate piping (4F4/5/6/7)	1386
● Body piping outdoor option (4F2/3)	1400
● Body piping NAMUR standard option (4F1/4F3)	1404
Individual wiring manifold	
● Body piping ((A)M4F0/1/2/3)	1410
● Sub-plate piping (M4F4/5/6/7)	1438
Technical data	
(1) Terminal box/connector connection method	1452
4F Series common check valve/terminal box/option dimensions	1446
Manifold specifications sheets	1448
⚠ Safety precautions	1464

Piping method/series appearance				Model No.	Position Number of solenoids JIS symbol	Flow characteristics: C [dm³/(s·bar)] *1	Flow characteristics: Effective cross-sectional area S (mm²)	Applicable cylinder bore size	Voltage (V)	
Single unit	**4F**  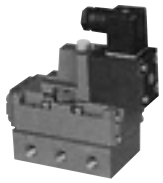	Direct	5-port	(A)4F0 *A is single	4F0 to 4F7 ● 2-position single 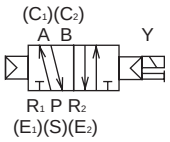 ● 2-position double 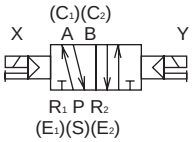	0.6 to 0.7	-	ø16 to ø20	100 AC 200 AC 24 DC Option 110 AC 220 AC 12 DC	
				4F1		1.5 to 2.0	-	ø20 to ø25		
				4F2		2.5 to 3.0	-	ø40 to ø80		
				4F2 (Outdoor)		2.5 to 3.0	-	ø40 to ø80		
				4F3		3.9 to 5.8	-	ø63 to ø100	100 AC 200 AC 24 DC	
				4F3 (Outdoor)		3.9 to 5.8	-	ø63 to ø100		
		Sub-plate	5-port	4F4	4F1 to 4F7 ● 3-position all ports closed 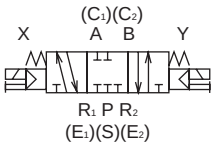	5.0 to 5.3	-	ø63 to ø100		
				4F5		9.7 to 10	-	ø80 to ø160	Option 110 AC 220 AC 12 DC	
				4F6		15 to 18	-	ø140 to ø200		
				4F7		-	160	ø180 to ø250		
Individual wiring manifold	**M4F** 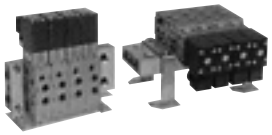 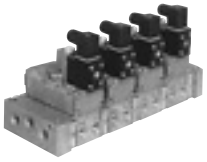	Direct	5-port	(A)M4F0 *A is single	● 3-position A/B/R 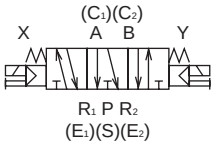 4F3 to 4F7 ● 3-position P/A/B 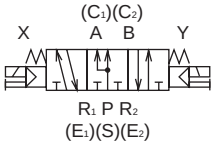	0.6 to 0.7	-	ø16 to ø20	100 AC 200 AC 24 DC Option 110 AC 220 AC 12 DC	
				M4F1		1.5 to 2.0	-	ø20 to ø25		
				M4F2		2.5 to 3.0	-	ø40 to ø80		
				M4F3		3.9 to 5.8	-	ø63 to ø100	100 AC 200 AC 24 DC	
		Sub-plate	5-port	M4F4		5.0 to 5.3	-	ø63 to ø100		
				M4F5		9.7 to 10	-	ø80 to ø160	Option 110 AC 220 AC 12 DC	
				M4F6		15 to 18	-	ø140 to ø200		
				M4F7		-	160	ø180 to ø250		

*1: Effective cross-sectional area "S" and sonic conductance "C" are converted as S ≈ 5.0 x C.

	Switching position						Port size of A/B port																					Electrical connections							Selection page
							Female thread																													
	2-position single	2-position double	3-position all ports closed	3-position ABR connection	3-position PAB connection	Mix	M5	Rp1/8	Rp1/4	Rp3/8	NPT1/8	NPT1/4	NPT3/8	NPT1/2	NPT3/4	NPT1	G1/8	G1/4	G3/8	G1/2	G3/4	G1	Rc1/4	Rc3/8	Rc1/2	Rc3/4	Rc1	Compact terminal box	DIN terminal box	C-connector	D-connector	Grommet lead wire	Conduit lead wire	With round terminal box	
	●	●					●	●			●						●											●		●	●	●			
	●	●	●	●				●	●		●	●					●	●										●		●	●	●			1372
	●	●	●	●					●			●						●											●			●	●	●	
	●	●	●	●					●			●						●																●	1400
	●	●	●	●	●				●	●		●	●					●	●										●			●	●	●	1372
	●	●	●	●	●				●	●		●	●					●	●															●	1400
	●	●	●	●	●																	●	●						●			●	●	●	
	●	●	●	●	●									●						●				●	●				●			●	●	●	
	●	●	●	●	●									●	●					●	●					●	●		●			●	●	●	1386
	●	●	●	●	●										●	●					●	●				●	●		●			●	●	●	
	●	●	●	●	●												●												●						
	●	●				●	●	●			●						●											●		●	●	●			
	●	●	●	●		●		●	●		●	●					●	●										●		●	●	●			1372
	●	●	●	●		●			●			●						●											●			●	●	●	
	●	●	●	●		●			●			●						●																●	1410
	●	●	●	●	●	●			●	●		●	●					●	●																
	●	●	●	●	●	●								●						●				●	●				●			●	●	●	
	●	●	●	●	●	●								●	●					●	●					●	●		●			●	●	●	1438
	●	●	●	●	●	●									●						●					●			●			●	●		

* Refer to the following page for details on electrical connections/other options.

Electrical connections

Manual override

4F0/4F1

Blank/B Compact terminal box

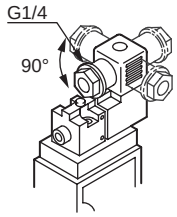

C C-connector with lead wire

● Lead wire length
C : 300 mm
C00 : 500 mm
C01 : 1000 mm
C02 : 2000 mm
C03 : 3000 mm

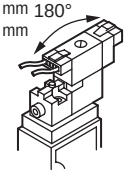

C3 C-connector without lead wire with surge suppressor/lamp

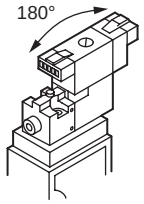

D2 D-connector with lead wire with surge suppressor/lamp

● Lead wire length
D2 : 300 mm
D20 : 500 mm
D21 : 1000 mm
D22 : 2000 mm
D23 : 3000 mm

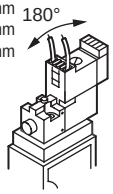

Blank Lateral non-locking

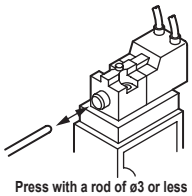

M6 Upward non-locking

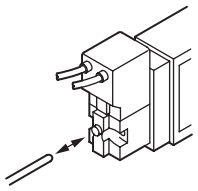

Blank/E Grommet lead wire

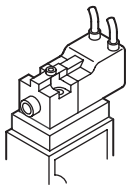

C1 C-connector without lead wire

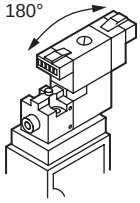

D D-connector with lead wire

● Lead wire length
D : 300 mm
D00 : 500 mm
D01 : 1000 mm
D02 : 2000 mm
D03 : 3000 mm

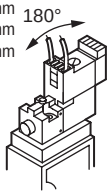

D3 D-connector without lead wire with surge suppressor/lamp

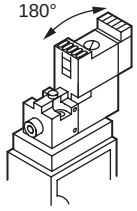

M1 Lateral locking

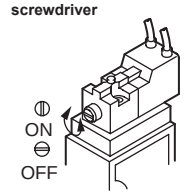

R Position change of manual override (4F0)

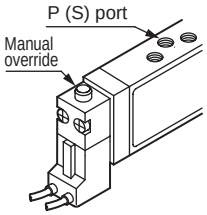

L Compact terminal box with lamp

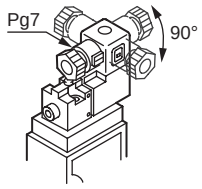

C2 C-connector with lead wire with surge suppressor/lamp

● Lead wire length
C2 : 300 mm
C20 : 500 mm
C21 : 1000 mm
C22 : 2000 mm
C23 : 3000 mm

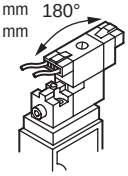

D1 D-connector without lead wire

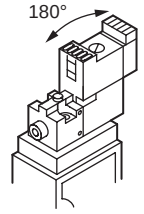

M4 Dust cover equipped non-locking

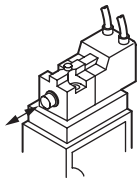

R Position change of manual override (4F1)

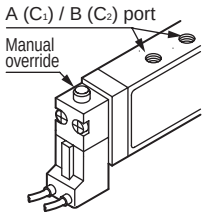

4F2 to 4F7

Blank DIN terminal box

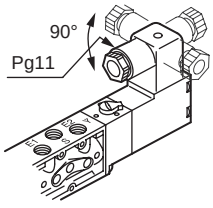

F DIN terminal box (G1/2)

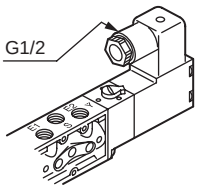

E1 Conduit lead wire (CTC19)

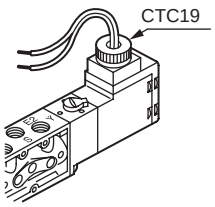

B B1 G Round terminal box

B : G 1/2
B1 : G 3/4
G : G 1/2 (gland attached)

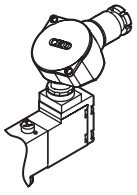

Blank Locking

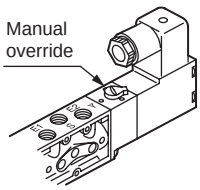

M3 Locking with manual lever

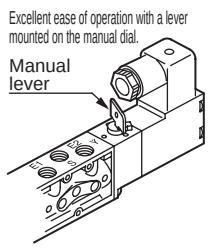

L DIN terminal box with lamp

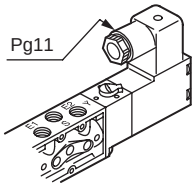

E Grommet lead wire

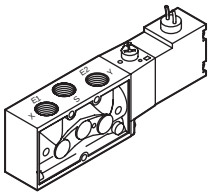

E2 Conduit lead wire (G 1/2)

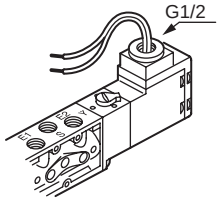

BL GL Round terminal box (G 1/2) with lamp

GL : gland attached

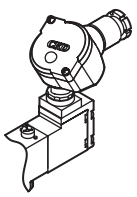

M2 Non-locking

Push with a rod ø7 or less

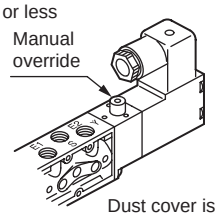

Dust cover is custom order product.

R Position change of manual override

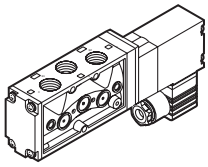

Electric connection circuit diagram

Other options	Voltage	Option	Wiring circuit	Electrical connections
	AC	——	(~) (~)	Grommet lead wire Terminal box (B/F) C connector (C/C0*/C1) D connector (D/D0*/D1)
		With indicator lamp	(~) NL (~)	Terminal box (L, BL)
		With surge suppressor and indicator lamp	(~) NL (~) Varistor	C connector (C2/C2*/C3) D connector (D2/D2*/D3)
		Surge suppressor attached	(~) (~) Varistor	Surge suppressor attached (S)
	DC	——	(±) (∓)	Grommet lead wire Terminal box (B/F) C connector (C/C0*/C1) D connector (D/D0*/D1)
		With surge suppressor and indicator lamp	Red (±) (∓) Black Varistor	Terminal box (L) C connector (C2/C2*/C3) D connector (D2/D2*/D3)
			+ -	Terminal box (BL)
		Surge suppressor attached	When using a suppression type (with 24 VDC or less) + - Diode * Diode has polarity.	4F0/1 Grommet lead wire (24 VDC or less voltage only) (The option code “S” will be included with the surge suppressor.)
			(±) (∓) Varistor * Varistor has no polarity.	Surge suppressor attached (S)

S Surge suppressor attached

DC

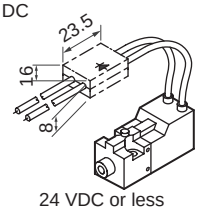

24 VDC or less
Lead wire only
(Diode)

AC/DC

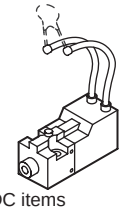

DC items other than the lead wire and AC items

N Plug attached



Assemble to NC/C₁ (A), E₁ (R₁)
Assemble to NO/C₂ (B), E₂ (R₂)

S Surge suppressor attached

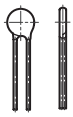

N Plug attached



Assemble to NC/C₁ (A), E₁ (R₁)
Assemble to NO/C₂ (B), E₂ (R₂)

H (Check valve attached)

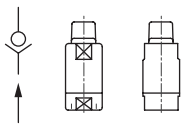

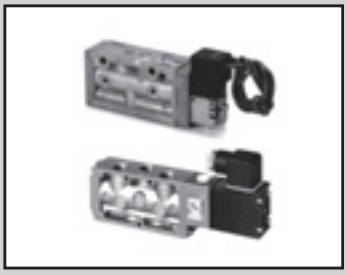

Discrete valve/body piping
Pilot operated 5-port pneumatic valve

4F0/1/2/3 Series

● Cylinder bore size: ø16 to ø100

CE Refer to the Ending for details.

RoHS CAD

JIS symbol

● 5-port valve

2-position single

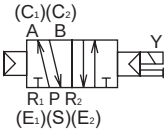

2-position double

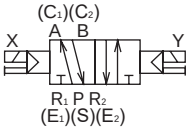

3-position all ports closed

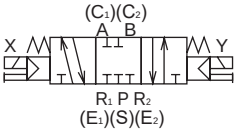

3-position A/B/R connection

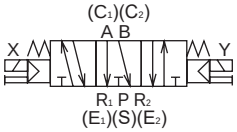

3-position P/A/B connection

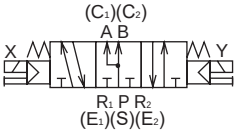

Common specifications

Item	Description
Valve and operation	Pilot operated soft spool valve
Working fluid	Compressed air
Max. working pressure MPa	1.0 (≈150 psi, 10 bar)
Min. working pressure MPa	Refer to Individual specifications listed below
Proof pressure MPa	1.5 (≈220 psi, 15 bar)
Ambient temperature °C *1	-10 (14°F) to 60 (140°F) (no freezing)
Fluid temperature °C	5 (41°F) to 60 (140°F)
Lubrication	Not required (use turbine oil ISO VG32 if lubrication is necessary)
Degree of protection	Dust-proof
Vibration resistance m/s²	50 or less
Shock resistance m/s²	300 or less
Atmosphere	Cannot be used in corrosive gas environment.

*1: The ambient temperature indicates the temperature for storage and upon installation, which will differ from the fluid temperature during operation.

Electrical specifications

Item			(A)4F0 to 1	4F2/3
Rated voltage V	AC		100, 200, 110, 220 (50 / 60 Hz)	
	DC		12,24	
Voltage fluctuation range			±10%	
Starting current A	AC	100 V	0.056 / 0.044	0.170 / 0.140
		200 V	0.034 / 0.026	0.090 / 0.070
		110 V	0.051 / 0.040	0.150 / 0.130
		220 V	0.031 / 0.024	0.080 / 0.060
	DC	12 V	0.150	0.500
		24 V	0.075	0.250
Holding current A	AC	100 V	0.028 / 0.022	0.100 / 0.080
		200 V	0.017 / 0.013	0.050 / 0.040
		110 V	0.025 / 0.020	0.090 / 0.070
		220 V	0.015 / 0.012	0.050 / 0.040
	DC	12 V	0.150	0.500
		24 V	0.075	0.250
Power consumption W	AC	100 V	1.8 / 1.4	5.0 / 4.0
		200 V	2.1 / 1.6	5.0 / 4.0
		110 V	1.8 / 1.4	5.0 / 4.0
		220 V	2.1 / 1.6	5.0 / 4.0
	DC	12 V	1.8	6.0
		24 V	1.8	6.0
Thermal class			B (molded coil)	

Reference: Rated voltage 100 VAC 50/60Hz can be used at 110 VAC 60Hz, and 200 VAC 50/60Hz at 220 VAC 60Hz.

Individual specifications

1 MPa = 10 bar

Item			(A)4F0 *1	4F1	4F2	4F3
Min. working pressure MPa	2-position	Single	0.15 (≈22 psi)	0.15 (≈22 psi)	0.10 (≈15 psi)	0.10 (≈15 psi)
		Double		0.10 (≈15 psi)		
	3-position	All ports closed	-	0.20 (≈29 psi)	0.15 (≈22 psi)	0.15 (≈22 psi)
		A/B/R connection				
		P/A/B connection		-	-	
Port size			M5	Rp1/8 NPT1/8 G1/8	Rp1/8 NPT1/8 G1/8	Rp1/4 NPT1/4 G1/4	Rp1/4 NPT1/4 G1/4	Rp1/4 NPT1/4 G1/4	Rp3/8 NPT3/8 G3/8

*1: With the single type, (A) is A4F010.

Performance/characteristics by model

Item	(A)4F0	4F1	4F2	4F3
Response time *2 ms	30	30	50	50

*2: The response time is the value at 0.5 MPa working pressure, with no lubrication, and with the power ON. It depends on the pressure and the lubricant quality.

Weight

Item			(A)4F0	4F1	4F2	4F3
Weight kg	2-position	Single	0.14	0.20	0.60	0.69
		Double	0.19	0.26	0.93	1.01
	3-position		-	0.33	1.06	1.20

Flow characteristics

Model No.	Solenoid position		Port size	C[dm³/(s·bar)]	b
(A)4F0 *2	2-position	Single	M5	0.61	0.35
		Double			
		Single	Rp1/8 NPT1/8 G1/8	0.74	0.27
		Double			
4F1	2-position	Single	Rp1/8,Rp1/4 NPT1/8,NPT1/4 G1/8,G1/4	2.0	0.33
		Double			
	3-position	All ports closed		1.5	0.31
		A/B/R connection		1.6	0.29
4F2	2-position	Single	Rp1/4 NPT1/4 G1/4	3.0	0.33
		Double			
	3-position	All ports closed		2.5	0.43
		A/B/R connection			
4F3	2-position	Single	Rp1/4 NPT1/4 G1/4	3.9	0.42
		Double			
	3-position	All ports closed		4.0	0.35
		A/B/R connection		4.5	0.42
		P/A/B connection		4.0	0.35
	2-position	Single	Rp3/8 NPT3/8 G3/8	5.8	0.42
		Double			
	3-position	All ports closed		4.4	0.42
		A/B/R connection		5.1	0.46
		P/A/B connection		4.4	0.42

*1: Effective cross-sectional area S and sonic conductance C are converted as S ≈ 5.0 x C.
*2: With the single type, (A) is A4F010.

CE marking specifications

** - Voltage - **ST**

- Standard voltage of 24 VDC or less is CE marking-compatible even if the model No. is not indicated with "ST".

Copper and PTFE free specifications

● Copper- and PTFE-based materials are not used in the flow path.

** - Voltage - **P6**

(4F0 is not available.)

How to order discrete valve/body piping

4F3 1 0 - 08 - M2 L [ ] - AC100V

- Ⓐ Model No.
- Ⓑ Solenoid position
- Ⓒ Port size
- Ⓓ Manual override
- Ⓔ Electrical connections
- Ⓕ Other options
- Ⓖ Voltage

Code	Description	Ⓐ Model No. (A) 4F0	4F1	4F2	4F3
Ⓑ Solenoid position					
1	2-position single	●	●	●	●
2	2-position double	●	●	●	●
3	3-position all ports closed		●	●	●
4	3-position A/B/R connection		●	●	●
5	3-position P/A/B connection				●
Ⓒ Port size					
M5	M5	●			
06	Rp 1/8 (*1)	●	●		
08	Rp 1/4 (*2)		●	●	●
10	Rp 3/8				●
06N	NPT 1/8 (*1)	●	●		
08N	NPT 1/4 (*2)		●	●	●
10N	NPT 3/8				●
06G	G 1/8 (*1)	●	●		
08G	G 1/4 (*2)		●	●	●
10G	G 3/8				●
Ⓓ Manual override					
M1	Locking	●	●		
Blank	Locking			●	●
Blank	Non-locking	●	●		
M2	Non-locking			●	●
M3	Locking with manual lever			●	●
M4	Dust cover equipped non-locking	●	●		
M6	Non-locking upward direction	●	●		
R	Position change of manual override	●	●	●	●
Ⓔ Electrical connections					
Refer to the next page for electrical connections.					
Ⓕ Other options					
Blank	No option	●	●	●	●
P	Installation feet (L-bracket) (for 2-position single)	●	●	●	●
P1	Installation feet (U-bracket)	●	●	●	●
S	Surge suppressor (varistor) included (*3)	●	●	●	●
H	With check valve (applicable: 3-position all ports closed)			●	●
N	Plug attached (for 3-port valve)	●	●	●	●
NC	3-way valve used plug assembly (C1 (A), E1 (R1) assembly)	●	●	●	●
NO	3-way valve used plug assembly (C2(B), E2(R2) assembly)	●	●	●	●
Ⓖ Voltage					
AC100V	100 VAC 50/60 Hz	●	●	●	●
AC200V	200 VAC 50/60 Hz	●	●	●	●
DC12V	12 VDC	●	●	●	●
DC24V	24 VDC	●	●	●	●
AC110V	110 VAC 50/60 Hz	●	●	●	●
AC220V	220 VAC 50/60 Hz	●	●	●	●
*** Other custom order products**					
AC24V		●	●		
AC48V		●	●		
DC6V		●	●		
DC48V		●	●	●	●
DC100V				●	●
DC110V				●	●

⚠ Precautions for model No. selection

*1 : The R1/R2 port of 4F0 is M5.
*2 : The 4F1 ports R1/R2 are 08: Rp1/8, 08N: NPT1/8, 08G: G1/8.
*3 : The surge suppressor for attachment is a suppression connector when the grommet lead wire is 24 VDC or less. (Refer to page 1371.)

[Example of model No.]

4F340-08-M2P1-AC100V

- Ⓐ Model: 4F3 : 4F3
- Ⓑ Solenoid position : 3-position A/B/R connection
- Ⓒ Port size : Rp1/4
- Ⓓ Manual override : Non-locking
- Ⓔ Electrical connections : Blank for DIN terminal box (Pg11)
- Ⓕ Other options : Installation feet
- Ⓖ Voltage :100 VAC

[Electrical connection list]

Ⓔ Electrical connections		Ⓐ Model No. (A) 4F0	4F1	4F2	4F3
Compact terminal box					
B	Without lead wire	●			
Blank	Without lead wire		●		
L	Without lead wire, with lamp (*4)	●	●		
DIN terminal box					
Blank	DIN terminal box (Pg11)			●	●
L	DIN terminal box (Pg11)/with lamp (*4)			●	●
F	DIN terminal box (G1/2)			●	●
C-connector (lead wire lateral direction)					
C	Lead wire length (300 mm)	●	●		
C00	Lead wire length (500 mm)	●	●		
C01	Lead wire length (1000 mm)	●	●		
C02	Lead wire length (2000 mm)	●	●		
C03	Lead wire length (3000 mm)	●	●		
C1	Without lead wire	●	●		
C2	Lead wire length (300 mm) with surge suppressor and indicator lamp	●	●		
C20	Lead wire length (500 mm) with surge suppressor and indicator lamp	●	●		
C21	Lead wire length (1000 mm) with surge suppressor and indicator lamp	●	●		
C22	Lead wire length (2000 mm) with surge suppressor and indicator lamp	●	●		
C23	Lead wire length (3000 mm) with surge suppressor and indicator lamp	●	●		
C3	Without lead wire with surge suppressor and indicator lamp	●	●		
D-connector (lead wire upward direction)					
D	Lead wire length (300 mm)	●	●		
D00	Lead wire length (500 mm)	●	●		
D01	Lead wire length (1000 mm)	●	●		
D02	Lead wire length (2000 mm)	●	●		
D03	Lead wire length (3000 mm)	●	●		
D1	Without lead wire	●	●		
D2	Lead wire length (300 mm) with surge suppressor and indicator lamp	●	●		
D20	Lead wire length (500 mm) with surge suppressor and indicator lamp	●	●		
D21	Lead wire length (1000 mm) with surge suppressor and indicator lamp	●	●		
D22	Lead wire length (2000 mm) with surge suppressor and indicator lamp	●	●		
D23	Lead wire length (3000 mm) with surge suppressor and indicator lamp	●	●		
D3	Without lead wire with surge suppressor and indicator lamp	●	●		
Grommet lead wire					
Blank	Grommet lead wire	●			
E	Grommet lead wire		●	●	●
E1	Conduit lead wire (CTC19)			●	●
E2	Conduit lead wire (G1/2)			●	●
B1	Conduit lead wire round terminal box (G3/4)			●	●
B	Conduit lead wire round terminal box (G1/2)			●	●
BL	Conduit lead wire round terminal box (G1/2) with lamp (*5) (*6)			●	●
G	Conduit lead wire round terminal box gland (A-15a)			●	●
GL	Conduit lead wire round terminal box gland (A-15a) with lamp (*5) (*6)			●	●

*4 : The DC of L has a built-in surge suppressor.
(Refer to page 1371 for the circuit diagram with a surge suppressor/lamp.)
*5 : 12 VDC models are not available for BL and GL.
*6 : The DC type of BL and GL has a built-in surge suppressor.

Internal structure and parts list

A4F010

● 2-position single

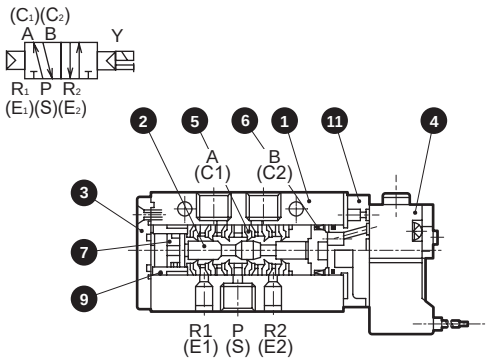

4F110

● 2-position single

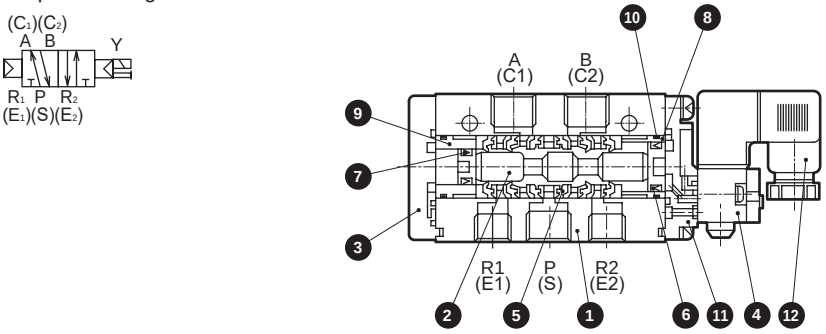

4F020

● 2-position double

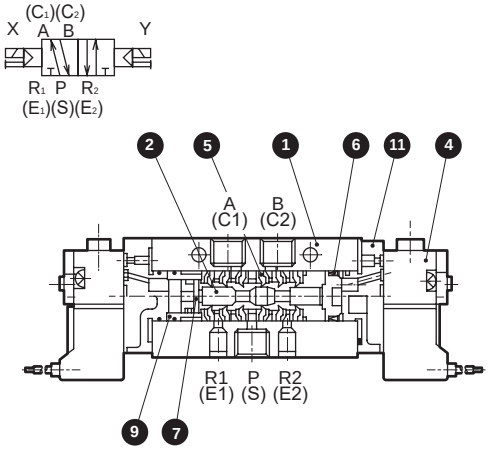

4F120

● 2-position double

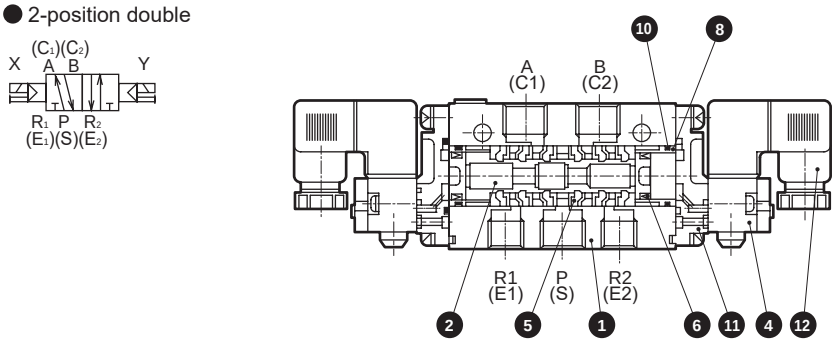

4F130

● 3-position
All ports closed

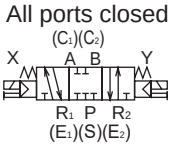

4F140

A/B/R connection

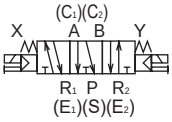

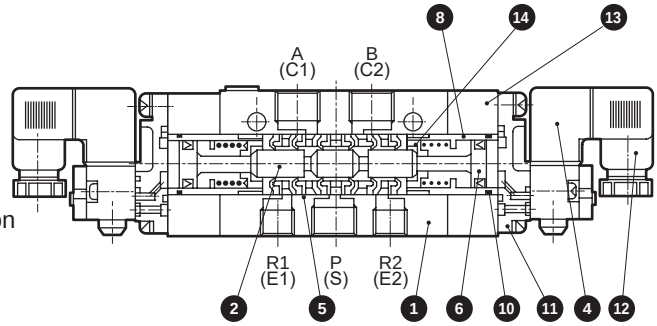

Main parts list

No.	Part name	Material
1	Body	Aluminum die-casting
2	Valving element (spool)	Aluminum
3	Cap	Aluminum die-casting
4	Coil assembly (solenoid valve)	-
5	Sealant assembly	-
6	Piston (A) assembly (large)	-
7	Piston (B) assembly (small)	-
8	Cylinder A (large)	Aluminum
9	Cylinder B (small)	Aluminum
10	O-ring	Nitrile rubber
11	Pilot valve body	Aluminum die-casting
12	Compact terminal box	-
13	Body block	Aluminum die-casting
14	Spring base	Stainless steel

Repair parts list

No./part name / Model No.	5 6 7 Repair parts kit	5 Sealant assy	6 Piston (A) large assy	7 Piston (B) small assy	4 Coil assembly *
A4F010	A4F010-K	4F9-126	4F9-124	4F9-125	4F9 - miniature pneumatic valve single model No. (Std 4F9-P5132-MOE-voltage)
4F020	4F020-K				
4F110	4F110-K	4F9-112	4F9-110	4F9-111	4F9 - miniature pneumatic valve single model No. (Basic P5132-MOB-voltage)
4F120	4F120-K			-	
4F130	4F130-K		4F9-159	-	
4F140				-	

*: Repair parts are in stock as kits. It is not possible to purchase individual components. (The kits include sealant assembly and piston (A), (B) assembly. The coil assembly is not included.)

Internal structure and parts list

4F210/4F310

● 2-position single

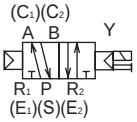

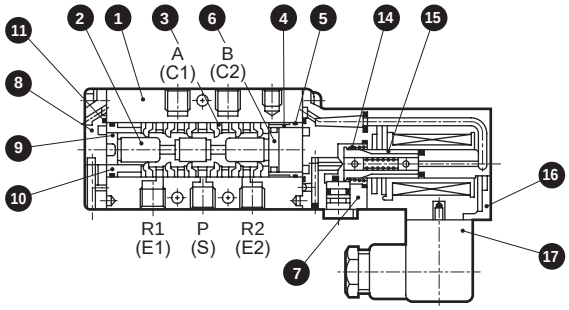

4F220/4F320

● 2-position double

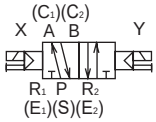

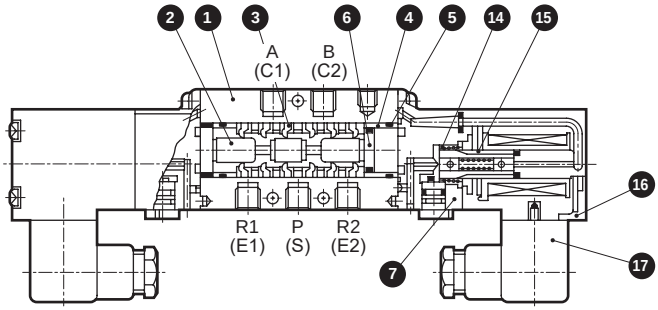

4F230/4F330

● 3-position
All ports closed

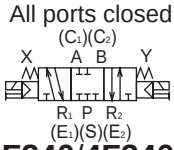

4F240/4F340

A/B/R connection

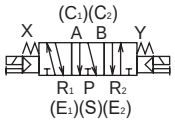

4F350

P/A/B connection

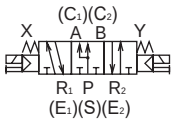

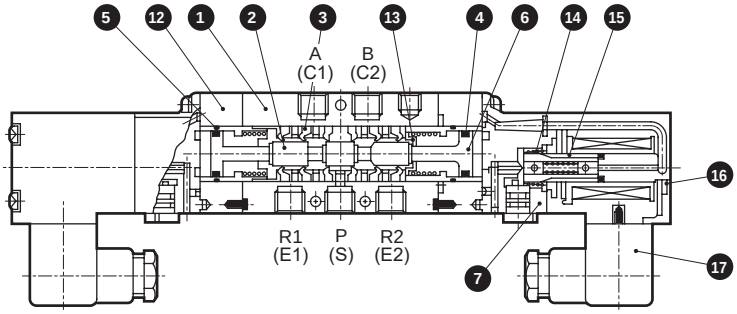

Main parts list

No.	Part name	Material
1	Body	Aluminum die-casting
2	Valving element (spool)	Aluminum
3	Sealant assembly	-
4	Cylinder A (large)	Aluminum
5	O-ring	Nitrile rubber
6	Piston (A) assembly (large)	-
7	Pilot valve body	Aluminum die-casting
8	Cap	Aluminum die-casting
9	Piston (B) assembly (small)	-
10	Cylinder B (small)	Aluminum
11	Gasket	Nitrile rubber
12	Body block	Aluminum die-casting
13	Spring base	Stainless steel
14	Plunger spring	-
15	Plunger	-
16	Coil assembly	-
17	DIN terminal box	-

Repair parts list

No./part name / Model No.	3 6 9 Repair parts kit	3 Sealant assy	6 Piston (A) large assy	9 Piston (B) small assy	16 Coil assembly *
4F210	4F210-K	4F9-105	4F9-101	4F9-102	4F2*0- Electrical connections - COIL-Voltage
4F220	4F220-K			-	
4F230	4F230-K		4F9-113	-	
4F240				-	
4F310	4F310-K	4F9-106	4F9-104	4F9-103	4F3*0- Electrical connections - COIL-Voltage
4F320	4F320-K			-	
4F330	4F330-K		4F9-114	-	
4F340				-	
4F350				-	

*: Repair parts are in stock as kits. It is not possible to purchase individual components. (The kits include sealant assembly and piston (A), (B) assembly. The coil assembly is not included.)
*: The plunger assembly is an attachment of the coil assembly.

Dimensions

A4F010 CAD

● 2-position single: (grommet lead wire)

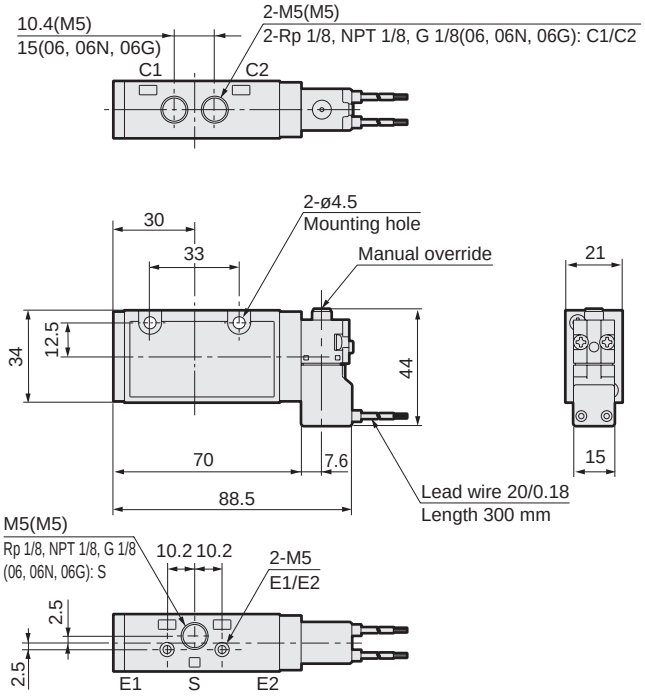

4F020 CAD

● 2-position double solenoid: (grommet lead wire)

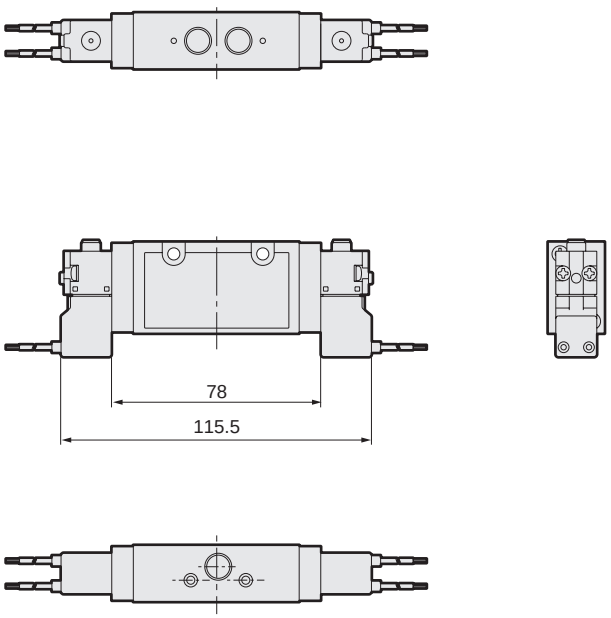

● Installation feet: (P: dedicated for 2-position single)

Material: Cold-rolled steel plates
Zinc plated

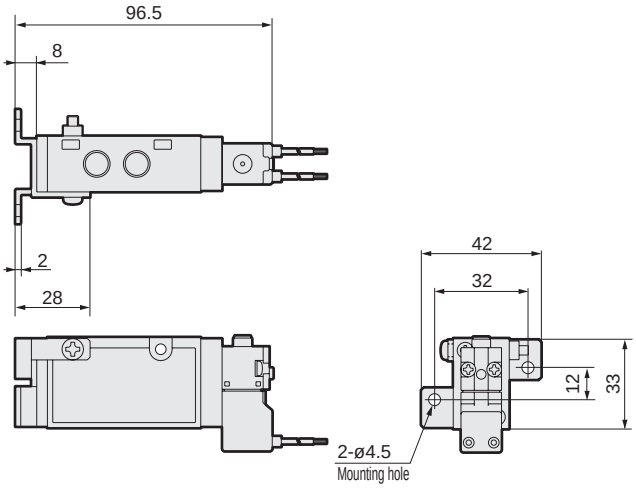

● Installation feet: (P1)

Material: Cold-rolled steel plates
Zinc plated

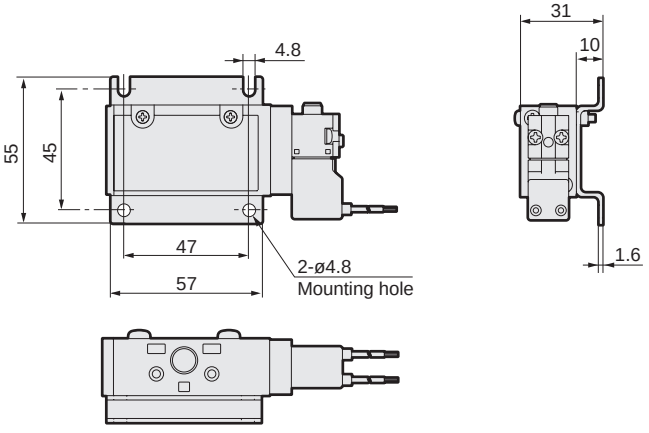

Dimensions

2-position single

2-position double

● Compact terminal box: (B)

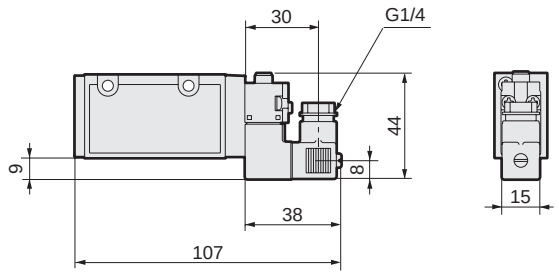

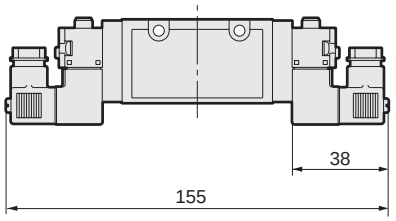

● Compact terminal box with lamp: (L)

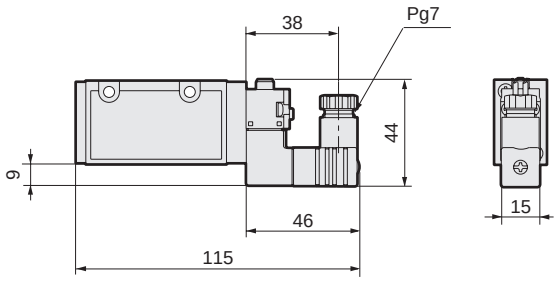

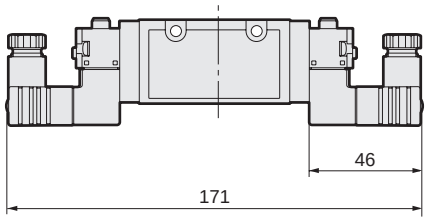

●C-connector: (C/C0*/C1/C2/C2*/C3)

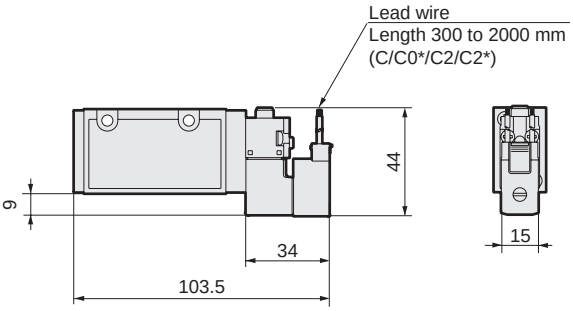

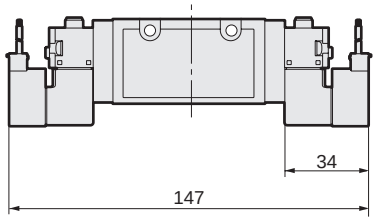

● D-connector: (D/D0*/D1/D2/D2*/D3)

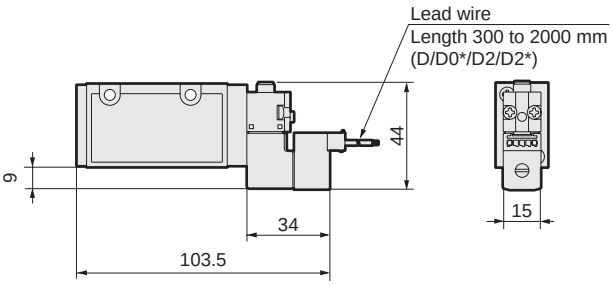

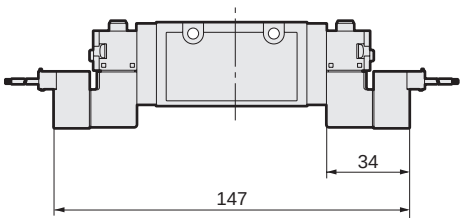

● Position change of manual override: (R)

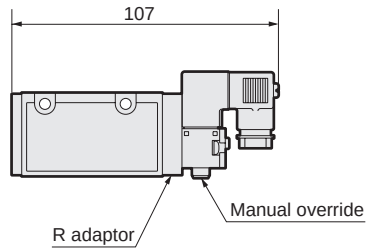

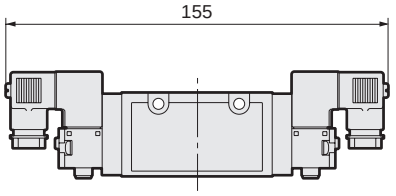

Dimensions

4F110 CAD

● 2-position single: compact terminal box

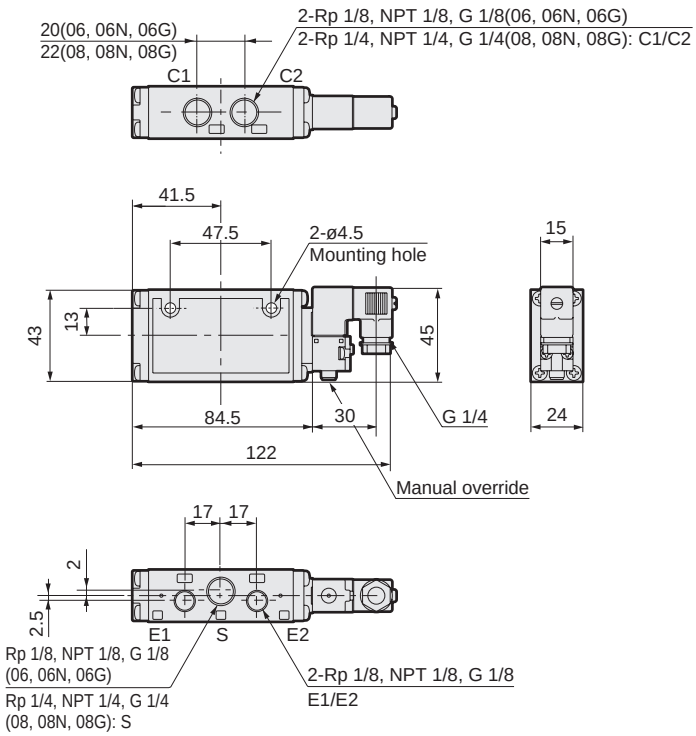

4F120 CAD

● 2-position double solenoid: compact terminal box

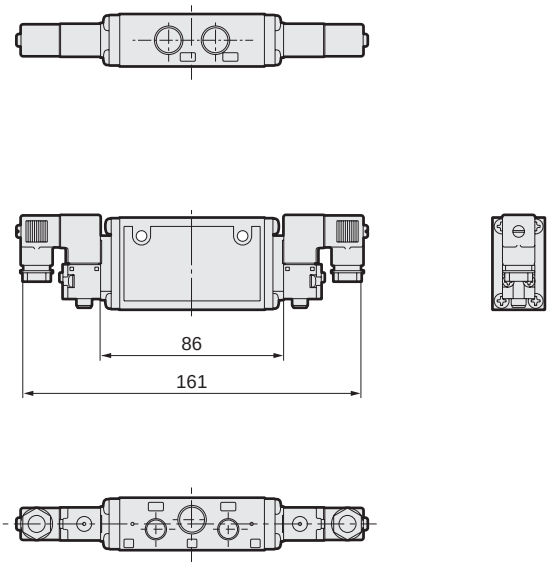

4F1$^{3}_{4}$0 CAD

● 3-position double solenoid: compact terminal box

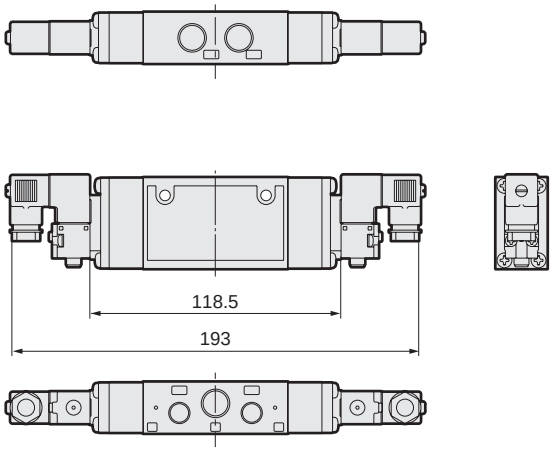

● Installation feet: (P: dedicated for 2-position single)
Material: Cold-rolled steel plates
Zinc plated

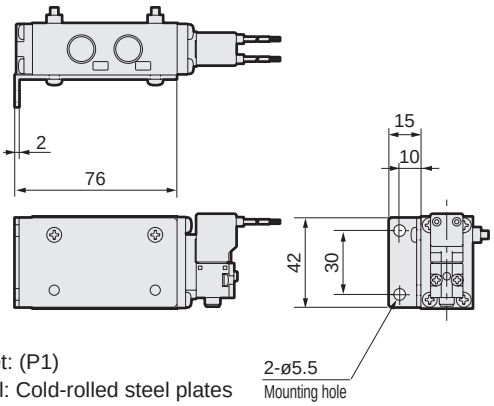

● Installation feet: (P1)
Material: Cold-rolled steel plates
Zinc plated

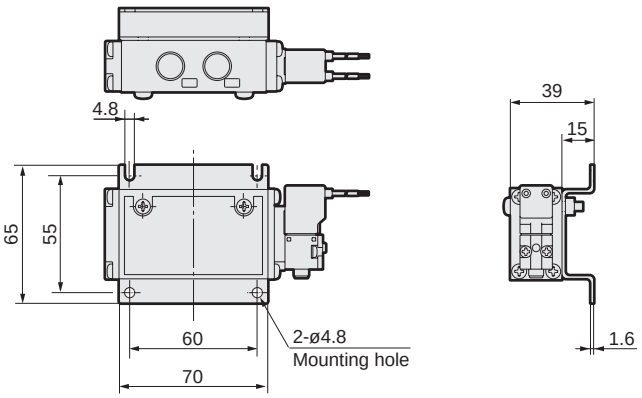

Dimensions

2-position single

2-position double solenoid/3 position

* 2-position double solenoid shown in image.

● Compact terminal box with lamp: (L)

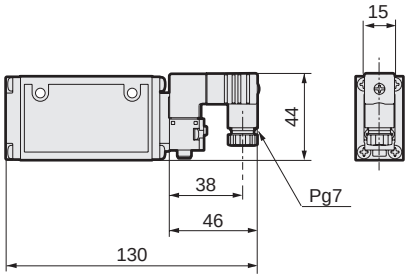

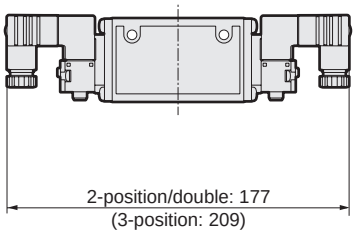

● Grommet lead wire: (E)

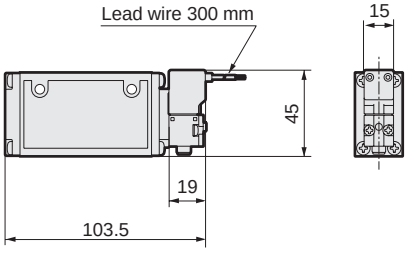

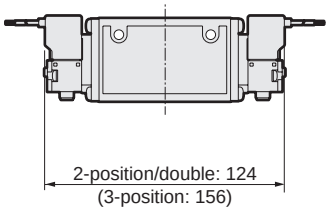

●C-connector: (C/C0*/C1/C2/C2*/C3)

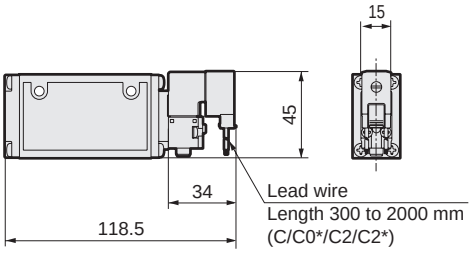

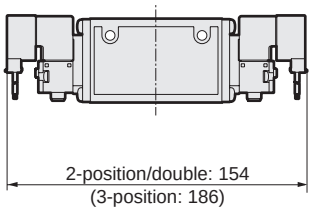

● D-connector: (D/D0*/D1/D2/D2*/D3)

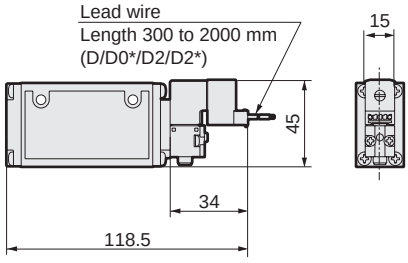

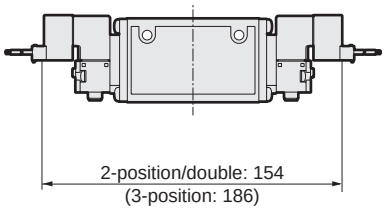

● Position change of manual override: (R)

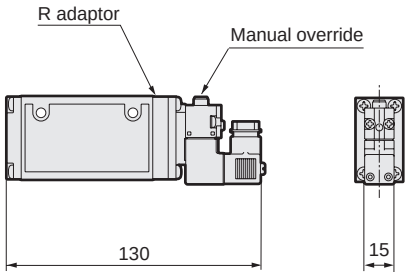

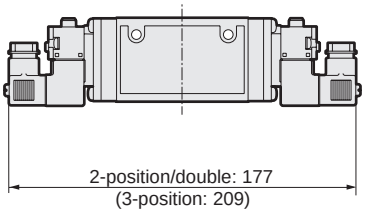

Dimensions

4F210 CAD

● 2-position single: DIN terminal box

DIN terminal box/with lamp (L)

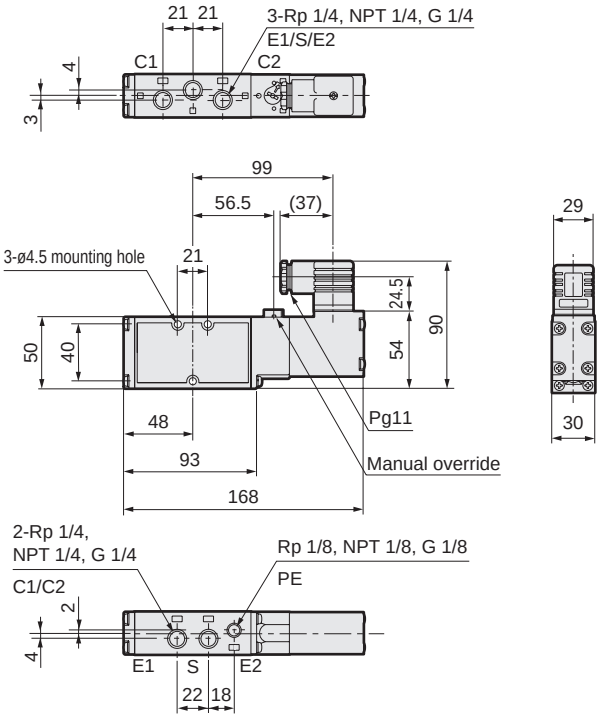

4F220 CAD

● 2-position double solenoid: DIN terminal box

DIN terminal box/with lamp (L)

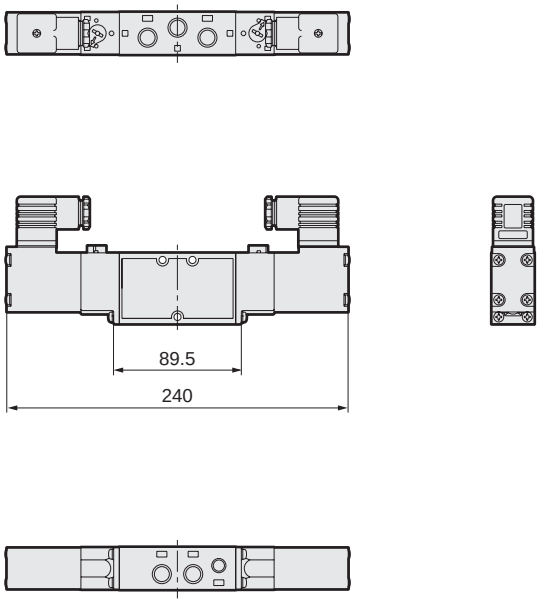

4F2$^{3}_{4}$0 CAD

● 3-position: DIN terminal box

DIN terminal box/with lamp (L)

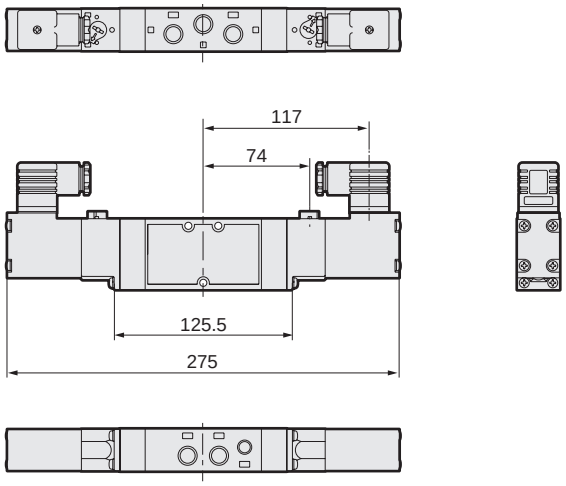

● Installation feet: (P: dedicated for 2-position single)

Material: Cold-rolled steel plates

Zinc plated

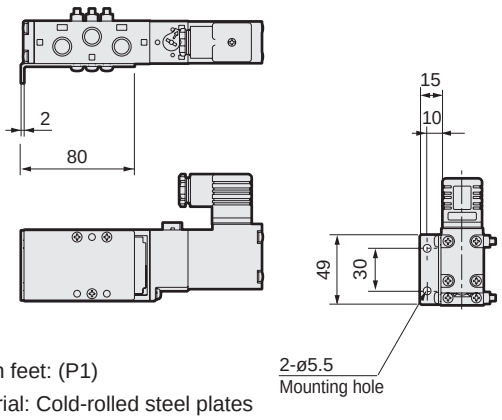

● Installation feet: (P1)

Material: Cold-rolled steel plates

Zinc plated

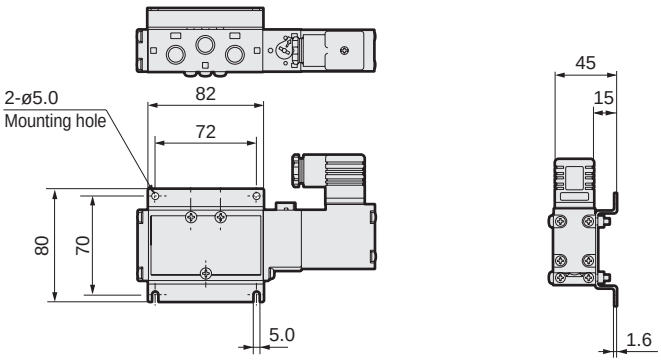

* Refer to page 1446 for details about check valves.

Dimensions

2-position single

2-position double solenoid/3 position
* 2-position double solenoid shown in image.

● DIN terminal box: (F)

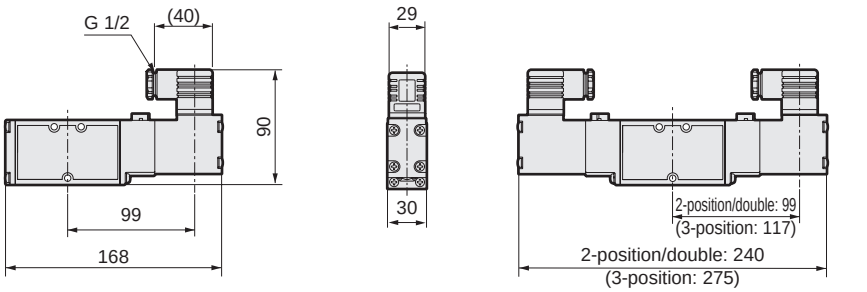

● Grommet lead wire: (E)

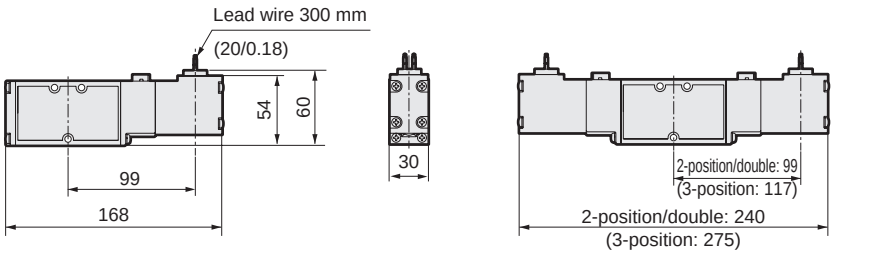

● Conduit lead wire: (E1/E2)

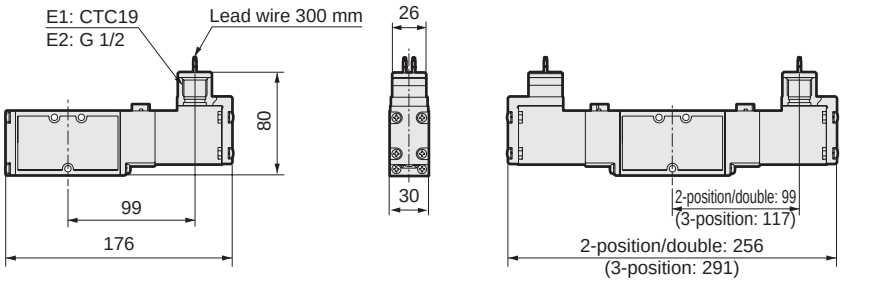

● Round terminal box: (B1/B/BL/G/GL)

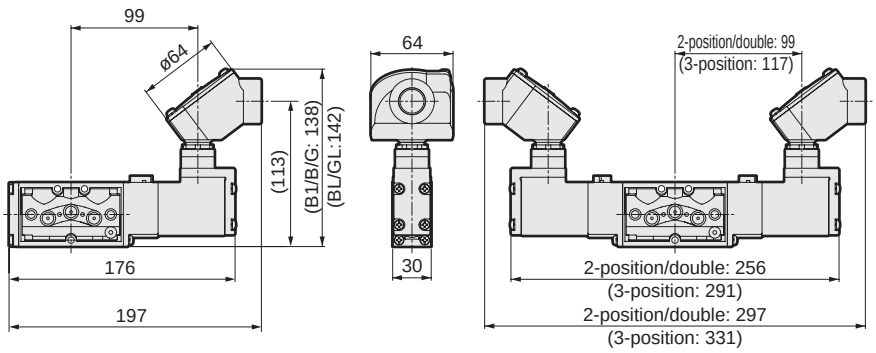

● Position change of manual override: (R)

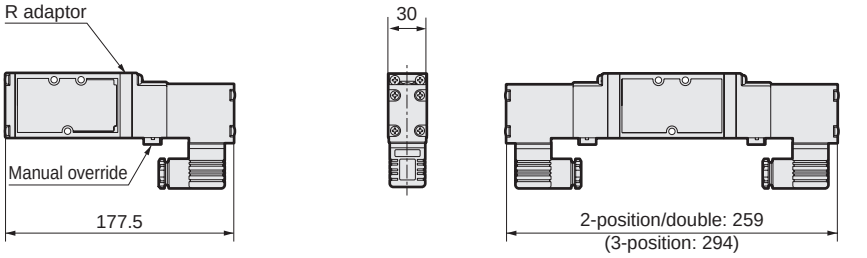

Dimensions

4F310 CAD

● 2-position single: DIN terminal box

DIN terminal box/with lamp (L)

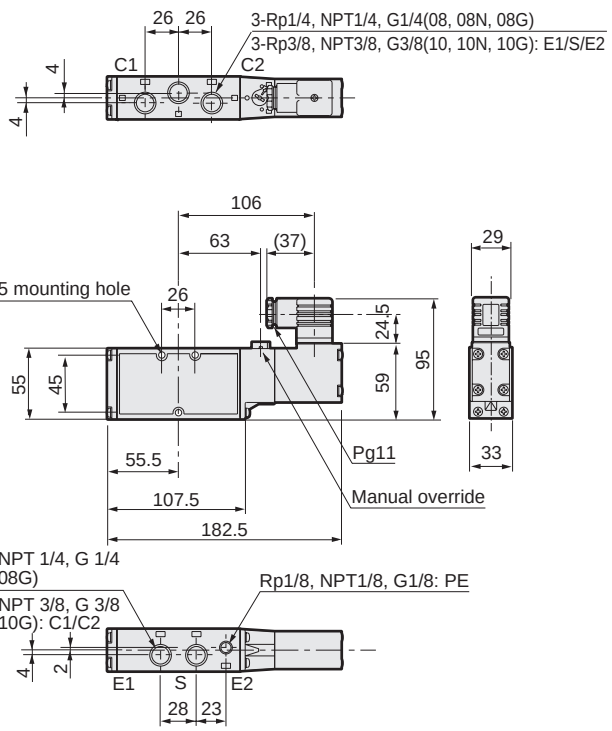

4F320 CAD

● 2-position double solenoid: DIN terminal box

DIN terminal box/with lamp (L)

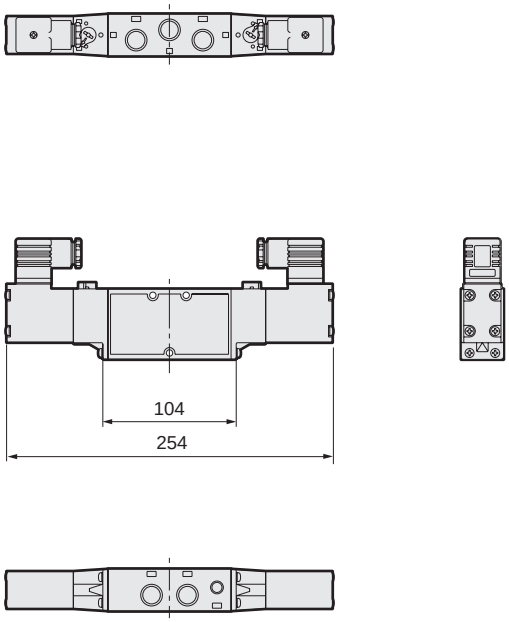

4F3[3/4/5]0 CAD

● 3-position: DIN terminal box

DIN terminal box/with lamp (L)

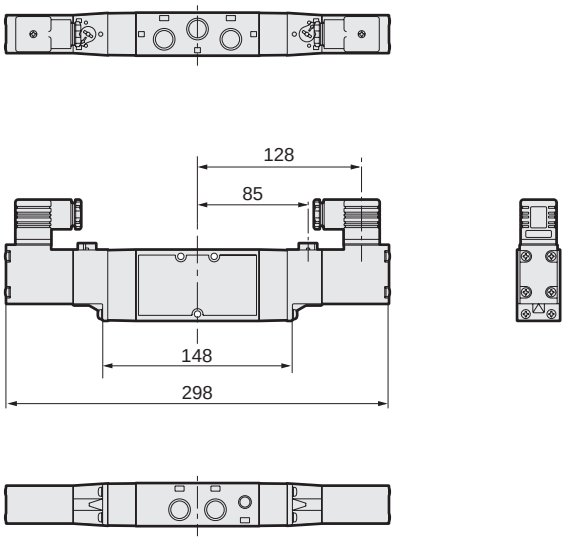

● Installation feet: (P: dedicated for 2-position single)

Material: Cold-rolled steel plates

Zinc plated

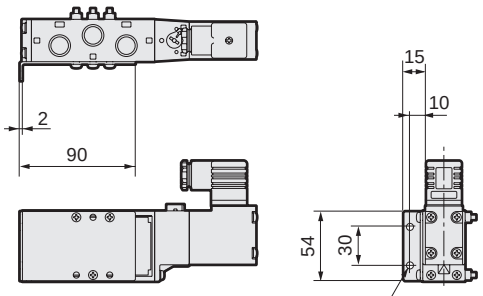

● Installation feet: (P1)

Material: Cold-rolled steel plates

Zinc plated

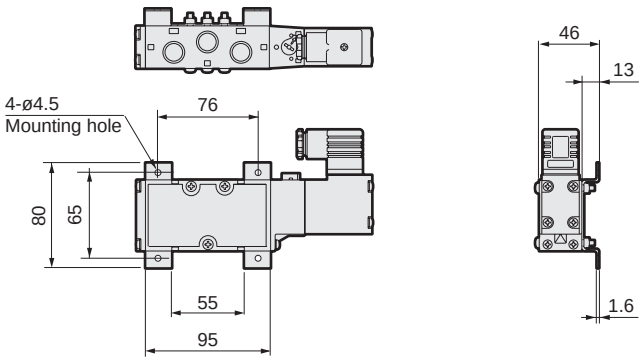

* Refer to page 1446 for details about check valves.

Dimensions

2-position single

2-position double solenoid/3 position
* 2-position double solenoid shown in image.

● DIN terminal box: (F)

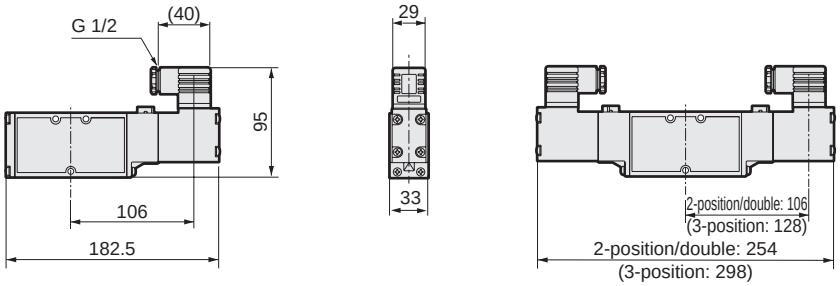

● Grommet lead wire: (E)

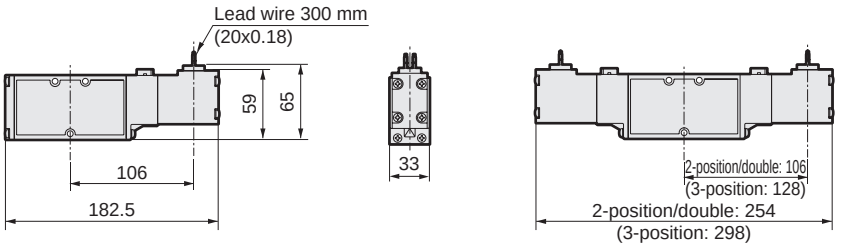

● Conduit lead wire: (E1/E2)

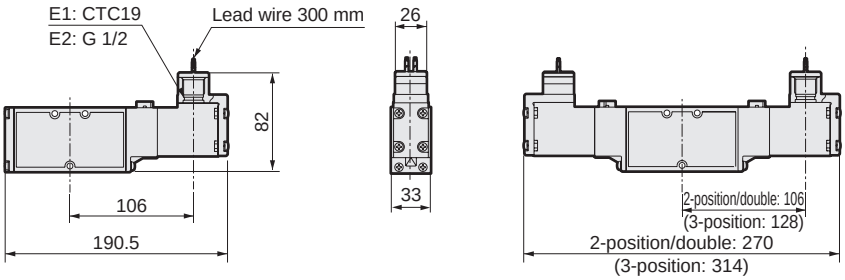

● Round terminal box: (B1/B/BL/G/GL)

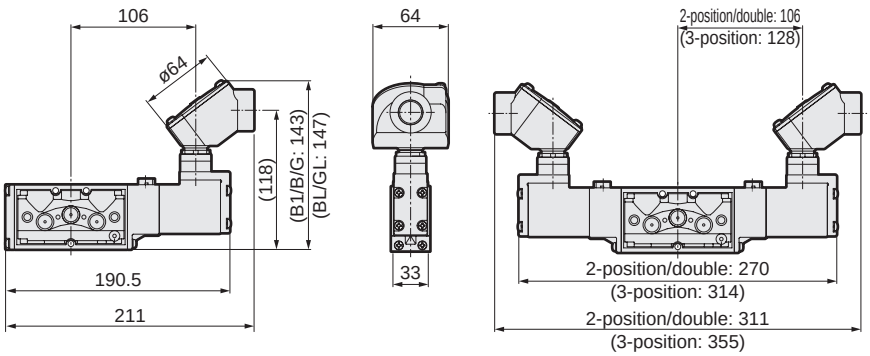

● Position change of manual override: (R)

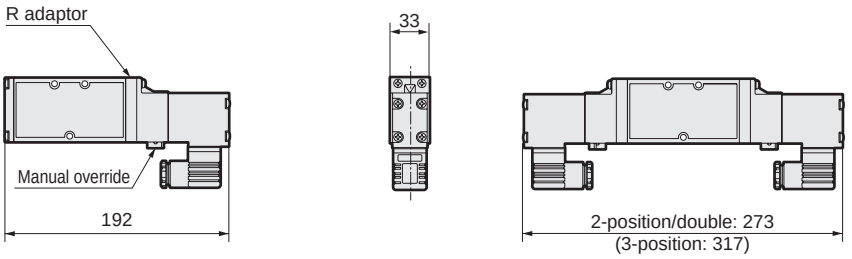

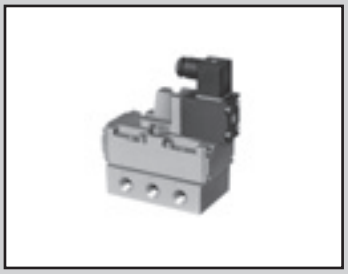

Discrete valve/sub-plate piping
Pilot operated 5-port pneumatic valve

4F4/5/6/7 Series

● Cylinder bore size: ø63 to ø250

CE Refer to the Ending for details. RoHS CAD

JIS symbol

● 5-port valve

2-position single

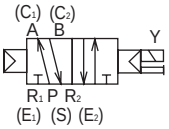

2-position double

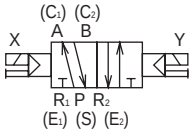

3-position
all ports closed

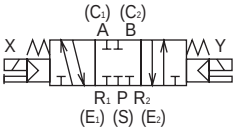

3-position A/B/R connection

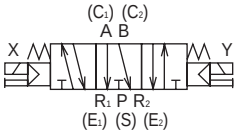

3-position P/A/B connection

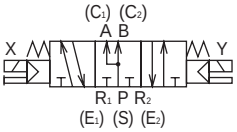

● External pilot

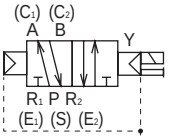

(Code indicates 2-position single)

Common specifications

Item	Description
Valve and operation	Pilot operated soft spool valve
Working fluid	Compressed air
Max. working pressure MPa	1.0 (≈150 psi, 10 bar)
Min. working pressure MPa (*2)	Refer to Individual specifications listed below
Proof pressure MPa	1.5 (≈220 psi, 15 bar)
Ambient temperature °C (*1)	-10 (14°F) to 60 (140°F) (no freezing)
Fluid temperature °C	5 (41°F) to 60 (140°F)
Lubrication	Not required (turbine oil ISO VG32 if necessary for lubrication)
Degree of protection	Dust-proof
Vibration resistance m/s²	50 or less
Shock resistance m/s²	300 or less
Atmosphere	Cannot be used in corrosive gas environment.

*1: The ambient temperature indicates the temperature for storage and upon installation, which will differ from the fluid temperature during operation.
*2: The working pressure range is 0 to 1.0 MPa when the external pilot (option code: K) is selected. Set the external pilot pressure between 0.15 and 1.0 MPa.

Electrical specifications

Item			4F4 to 7
Rated voltage V	AC		100, 200, 110, 220 (50/60 Hz)
	DC		12,24
Voltage fluctuation range			±10%
Starting current A	AC	100 V	0.170/0.140
		200 V	0.090/0.070
		110 V	0.15/0.13
		220 V	0.08/0.06
	DC	12 V	0.500
		24 V	0.250
Holding current A	AC	100 V	0.100/0.080
		200 V	0.050/0.040
		110 V	0.09/0.07
		220 V	0.05/0.04
	DC	12 V	0.500
		24 V	0.250
Power W	AC	100 V	5.0/4.0
		200 V	5.0/4.0
		110 V	5.0/4.0
		220 V	5.0/4.0
	DC	12 V	6.0
		24 V	6.0
Thermal class			B (molded coil)

Reference: Rated voltage 100 VAC 50/60Hz can be used at 110 VAC 60Hz, and 200 VAC 50/60Hz at 220 VAC 60Hz.

Individual specifications

1 MPa = 10 bar

Item			4F4		4F5		4F6		4F7	
Min. working pressure MPa	2-position	Single	0.10 (≈15 psi)		0.10 (≈15 psi)		0.15 (≈22 psi, 1.5 bar)		0.15 (≈22 psi, 1.5 bar)	
		Double								
	3-position	All ports closed	0.15 (≈22 psi)		0.15 (≈22 psi)					
		A/B/R connection								
		P/A/B connection								
Port size			Rc1/4 NPT1/4 G1/4	Rc3/8 NPT3/8 G3/8	Rc3/8 NPT3/8 G3/8	Rc1/2 NPT1/2 G1/2	Rc1/2 NPT1/2 G1/2	Rc3/4 NPT3/4 G3/4	Rc3/4 NPT3/4 G3/4	Rc1 NPT1 G1

Performance/characteristics by model

Item		4F4	4F5	4F6	4F7
Response time *1 ms		60	70	200	300

*1: The response time is the value at 0.5 MPa working pressure, with no lubrication, and with the power ON. It depends on the pressure and the lubricant quality.

Weight

Item			4F4	4F5	4F6	4F7
Weight kg	2-position	Single	1.01	1.26	1.92	3.46
		Double	1.29	1.58	2.26	3.78
	3-position		1.45	1.84	2.56	4.80

Flow characteristics

Model No.		Solenoid position	Port size	C[dm³/(s·bar)]	b	S(mm²)
4F4	2-position	Single	Rc1/4, Rc3/8 NPT1/4, NPT3/8 G1/4, G3/8	5.0	0.21	-
		Double				
	3-position	All ports closed		4.7	0.24	
		A/B/R connection		5.3	0.29	
		P/A/B connection		5.3	0.29	
4F5	2-position	Single	Rc3/8, Rc1/2 NPT3/8, NPT1/2 G3/8, G1/2	10.0	0.32	-
		Double				
	3-position	All ports closed		9.7	0.28	
		A/B/R connection		9.8	0.25	
		P/A/B connection				
4F6	2-position	Single	Rc1/2, Rc3/4 NPT1/2, NPT3/4 G1/2, G3/4	18.0	0.31	-
		Double				
	3-position	All ports closed		15.0	0.23	
		A/B/R connection				
		P/A/B connection				
4F7	2-position	Single	Rc3/4, Rc1 NPT3/4, NPT1 G3/4, G1	-	-	160
		Double				
	3-position	All ports closed				
		A/B/R connection				
		P/A/B connection				

*1: Effective cross-sectional area S and sonic conductance C are converted as S ≈ 5.0 x C.

CE marking specifications

** - Voltage - **ST**

• Standard voltage of 24 VDC or less is CE marking-compatible even if the model No. is not indicated with "ST".

Copper and PTFE free specifications

● Copper- and PTFE-based materials are not used in the flow path.

** - Voltage - **P6**

4F4 to 7 Series

Discrete valve; sub-plate piping

How to order single valve/sub-plate piping

4F4 1 0 - 08 - M2 L ( ) - AC100V

● Discrete solenoid valve Discrete

4F4 1 9 - 00 - M2 L ( ) - AC100V (4F4.5.6.7)

Ⓐ Model No. Ⓑ Solenoid position Ⓒ Port size Ⓓ Manual override Ⓔ Electrical connections Ⓕ Other options Ⓖ Voltage

Code	Description	Ⓐ Model No. 4F4	4F5	4F6	4F7
Ⓑ Solenoid position					
1	2-position single	●	●	●	●
2	2-position double	●	●	●	●
3	3-position all ports closed	●	●	●	●
4	3-position A/B/R connection	●	●	●	●
5	3-position P/A/B connection	●	●	●	●
Ⓒ Port size					
08	Rc1/4	●			
10	Rc3/8	●	●		
15	Rc1/2		●	●	
20	Rc3/4			●	●
25	Rc1				●
08N	NPT1/4	●			
10N	NPT3/8	●	●		
15N	NPT1/2		●	●	
20N	NPT3/4			●	●
25N	NPT1				●
08G	G1/4	●			
10G	G3/8	●	●		
15G	G1/2		●	●	
20G	G3/4			●	●
25G	G1				●
Ⓓ Manual override					
Blank	Locking	●	●	●	●
M2	Non-locking	●	●	●	●
M3	Locking with manual lever	●	●	●	●
Ⓔ Electrical connections					
Blank	DIN terminal box(Pg11)	●	●	●	●
L	DIN terminal box(Pg11)/with lamp (*1)	●	●	●	●
F	DIN terminal box(G1/2)	●	●	●	●
E	Grommet lead wire	●	●	●	●
E1	Conduit lead wire(CTC19)	●	●	●	●
E2	Conduit lead wire(G1/2)	●	●	●	●
B1	Round terminal box (G3/4) — Conduit lead wire Assemble on (E1)	●	●	●	●
B	Round terminal box (G1/2) — Conduit lead wire Assemble on (E1)	●	●	●	●
BL	Round terminal box (G1/2)/with lamp (*3) (*4) — Conduit lead wire Assemble on (E1)	●	●	●	●
G	Round terminal box With gland (A-15a) — Conduit lead wire Assemble on (E1)	●	●	●	●
GL	Round terminal box (*3) (*4) With gland (A-15a)/with lamp — Conduit lead wire Assemble on (E1)	●	●	●	●
Ⓕ Other options					
Blank	No option	●	●	●	●
K	External pilot (*2)	●	●	●	●
P	Installation feet (U-bracket)	●	●	●	●
S	Surge suppressor (varistor) included (*5)	●	●	●	●
H	Check valve attached (only compatible with 3-position all ports closed)	●	●	●	●
N	Plug attached (for 3-port valve)	●	●	●	●
NC	3-way valve used plug assembly (C1 (A), E1 (R1) assembly)	●	●	●	●
NO	3-way valve used plug assembly (C2(B), E2(R2) assembly)	●	●	●	●
Ⓖ Voltage					
AC100V	100 VAC 50/60 Hz	●	●	●	●
AC200V	200 VAC 50/60 Hz	●	●	●	●
DC12V	12 VDC	●	●	●	●
DC24V	24 VDC	●	●	●	●
AC110V	110 VAC 50/60 Hz	●	●	●	●
AC220V	220 VAC 50/60 Hz	●	●	●	●
*** Other made-to-order products**					
DC48V		●	●	●	●
DC100V		●	●	●	●
DC110V		●	●	●	●

⚠ Precautions for model No. selection

*1 : The DC of the DIN terminal box with lamp (L) has a built-in surge suppressor.
(Refer to page 1371 for the circuit diagram with surge suppressor/lamp.)
*2 : Contact CKD when using a vacuum with the external pilot (K) and exhaust pressurizing.
*3 : 12 VDC models are not available for BL and GL.
*4 : The DC type of BL and GL has a built-in surge suppressor.
*5 : The surge suppressor for attachment is a suppression connector when the grommet lead wire is 24 VDC or less. (Refer to page 1371.)

[Model No. example]

4F440-08-M2P-AC100V

Ⓐ Model : 4F4
Ⓑ Solenoid position : 3-position A/B/R connection
Ⓒ Port size : Rc1/4
Ⓓ Manual override : Non-locking
Ⓔ Electrical connections : Blank for DIN terminal box (Pg11)
Ⓕ Other options : Installation feet
Ⓖ Voltage : 100 VAC

Mounting method of 4F4 to 7 single units

● Mounting

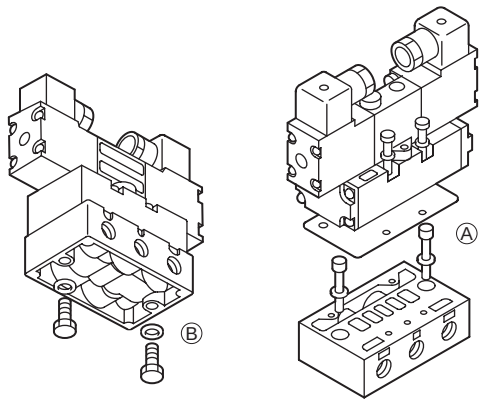

	For B	For A
4F4	M8	M6
4F5	M8	M6
4F6	M10	M8
4F7	M12	M10

4F410/4F510

● 2-position single

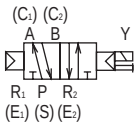

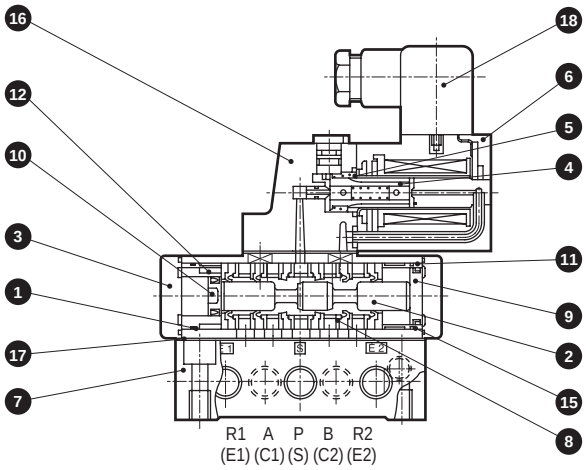

4F420/4F520

● 2-position double

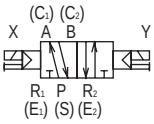

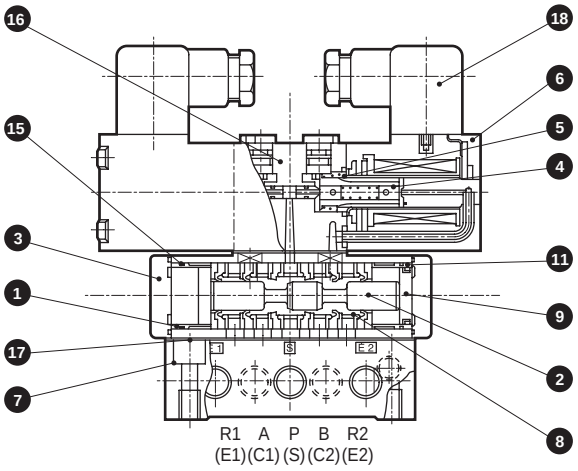

4F430/4F530

● 3-position

All ports closed

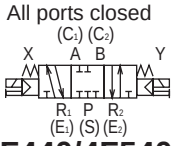

4F440/4F540

A/B/R connection

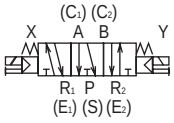

4F450/4F550

P/A/B connection

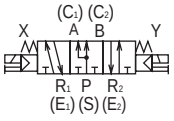

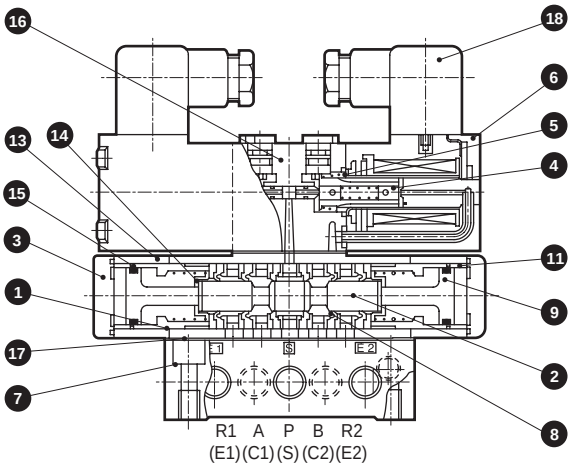

Main parts list

No.	Part name	Material
1	Body	Aluminum die-casting
2	Valving element (spool)	Aluminum
3	Cap	Aluminum die-casting
4	Plunger	-
5	Plunger spring	-
6	Coil assembly	-
7	Sub-plate	Aluminum die-casting
8	Sealant assembly	-
9	Piston (A) assembly (large)	-
10	Piston (B) assembly (small)	-
11	Cylinder A (large)	Aluminum
12	Cylinder B (small)	Aluminum
13	Body block	Aluminum die-casting
14	Spring base	Stainless steel
15	O-ring	Nitrile rubber
16	Pilot valve body assembly	-
17	Sub-plate gasket	Nitrile rubber
18	DIN terminal box	-

Repair parts list

No./part name	8 9 10	8	9	10	6
Model No.	Repair parts kit	Sealant assy	Piston (A) large assy	Piston (B) small assy	Coil assembly *
4F410	4F410-K	4F9-106	4F9-104	4F9-103	4F4*0-Electrical connections - COIL-Voltage
4F420	4F420-K			-	
4F430	4F430-K		4F9-114	-	
4F440				-	
4F450				-	
4F510	4F510-K	4F9-107	4F9-108	4F9-109	4F5*0-Electrical connections - COIL-Voltage
4F520	4F520-K			-	
4F530	4F530-K		4F9-115	-	
4F540				-	
4F550				-	

*: Repair parts are in stock as kits. It is not possible to purchase individual components. (The kits include sealant assembly and piston (A), (B) assembly. The coil assembly is not included.)

*: The plunger assembly is an attachment of the coil assembly.

Internal structure and parts list

4F610/4F710

● 2-position single

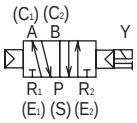

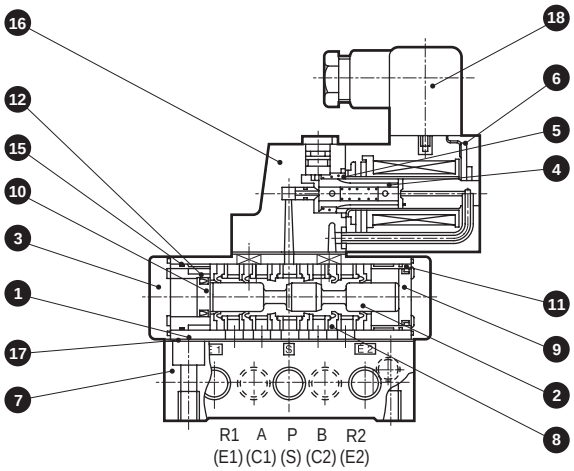

4F620/4F720

● 2-position double

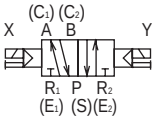

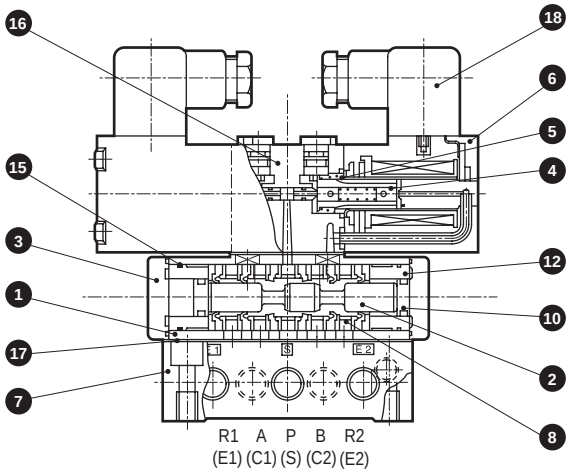

4F630/4F730

● 3-position

All ports closed

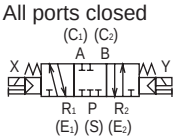

4F640/4F740

A/B/R connection

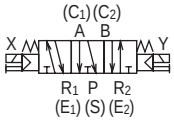

4F650/4F750

P/A/B connection

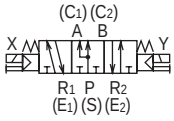

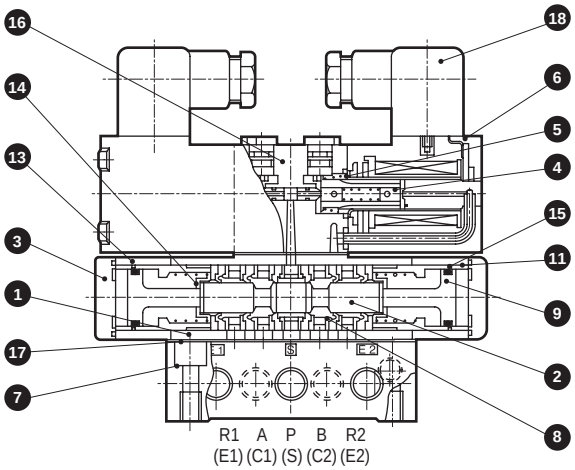

Main parts list

No.	Part name	Material
1	Body	Aluminum die-casting
2	Valving element (spool)	Aluminum
3	Cap	Aluminum die-casting
4	Plunger	-
5	Plunger spring	-
6	Coil assembly	-
7	Sub-plate	Aluminum die-casting
8	Sealant assembly	-
9	Piston (A) assembly (large)	-
10	Piston (B) assembly (small)	-
11	Cylinder A (large)	Aluminum
12	Cylinder B (small)	Aluminum
13	Body block	Aluminum die-casting
14	Spring base	Stainless steel
15	O-ring	Nitrile rubber
16	Pilot valve body assembly	
17	Sub-plate gasket	Nitrile rubber
18	DIN terminal box	-

Repair parts list

No./part name	8 9 10	8	9	10	6
Model No.	Repair parts kit	Sealant assy	Piston (A) large assy	Piston (B) small assy	Coil assembly *
4F610	4F610-K	4F9-118	4F9-117	4F9-116	4F6*0- Electrical connections - COIL-Voltage
4F620	4F620-K		-		
4F630	4F630-K		4F9-122	-	
4F640				-	
4F650				-	
4F710	4F710-K	4F9-119	4F9-121	4F9-120	4F7*0- Electrical connections - COIL-Voltage
4F720	4F720-K		-		
4F730	4F730-K		4F9-123	-	
4F740				-	
4F750				-	

*: Repair parts are in stock as kits. It is not possible to purchase individual components. (The kits include sealant assembly and piston (A), (B) assembly. The coil assembly is not included.)

*: The plunger assembly is an attachment of the coil assembly.

Dimensions

4F410 CAD

● 2-position single: DIN terminal box
DIN terminal box/with lamp (L)

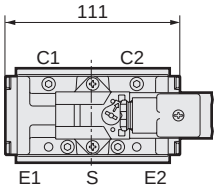

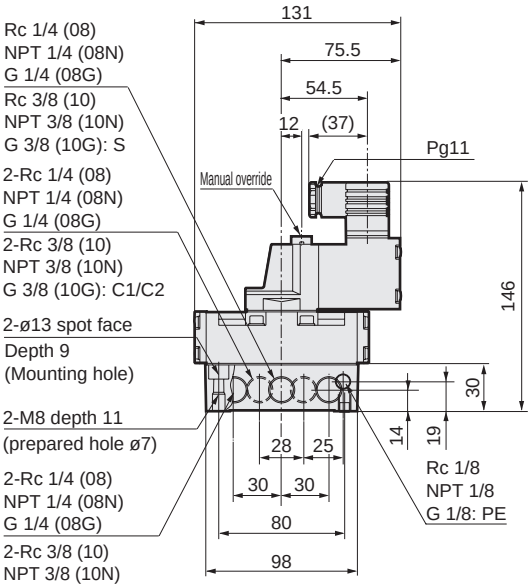

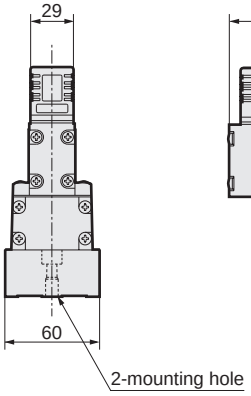

4F420 CAD

● 2-position double solenoid: DIN terminal box
DIN terminal box/with lamp (L)

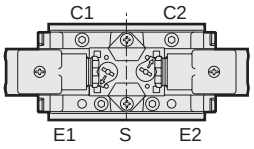

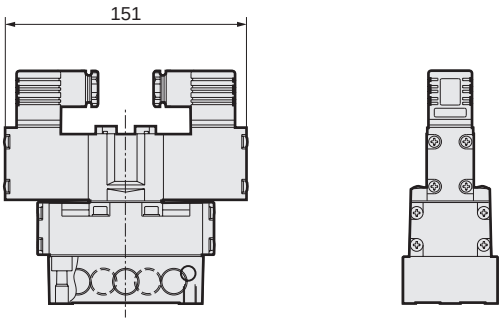

4F4 3 4 5 0 CAD

● 3-position: DIN terminal box
DIN terminal box/with lamp(L)

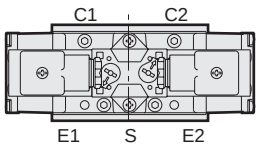

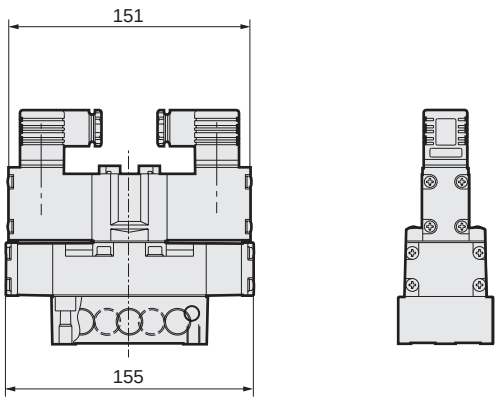

● Installation feet: (P)
Material: Hot-rolled steel plates
Zinc plated

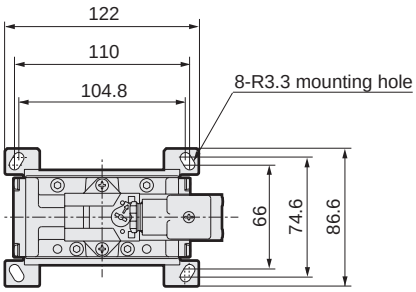

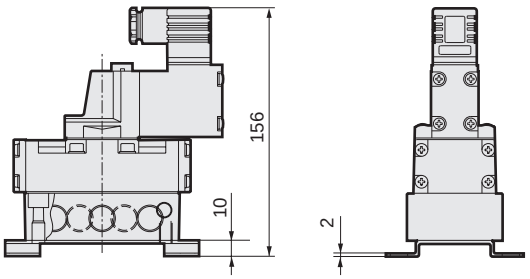

* Refer to page 1446 for details about check valves.

Dimensions

2-position single

2-position double solenoid/3-position
* 2-position double solenoid shown in image.

● DIN terminal box: (F)

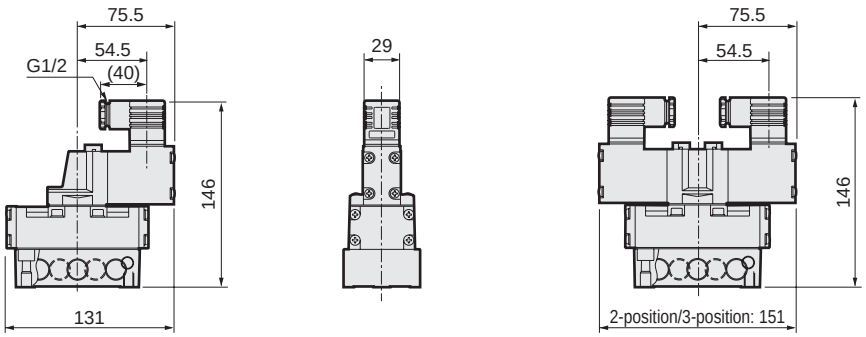

● Grommet lead wire: (E)

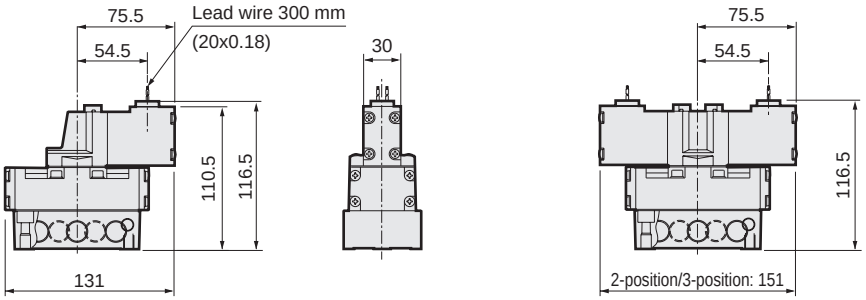

● Conduit lead wire: (E1/E2)

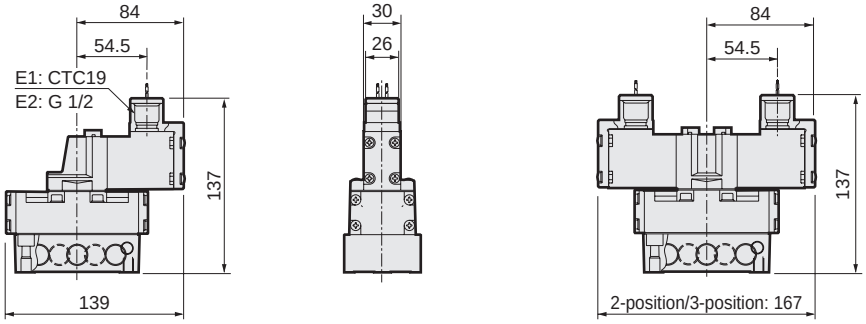

● Round terminal box: (B1/B/BL/G/GL)

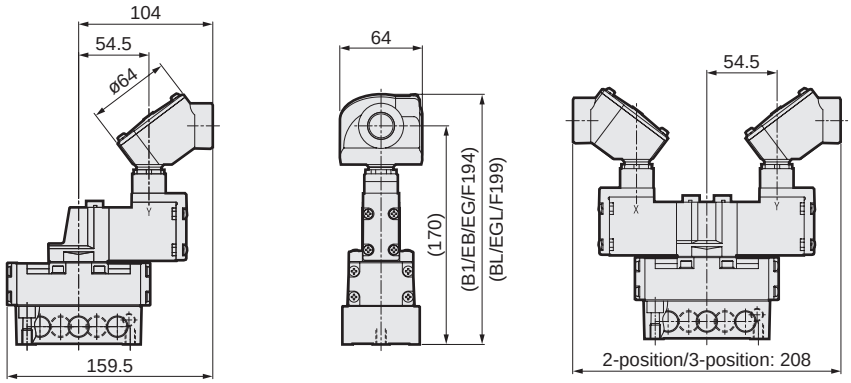

● External pilot port: (K)



Dimensions

4F510 CAD

● 2-position single: DIN terminal box
DIN terminal box/with lamp (L)

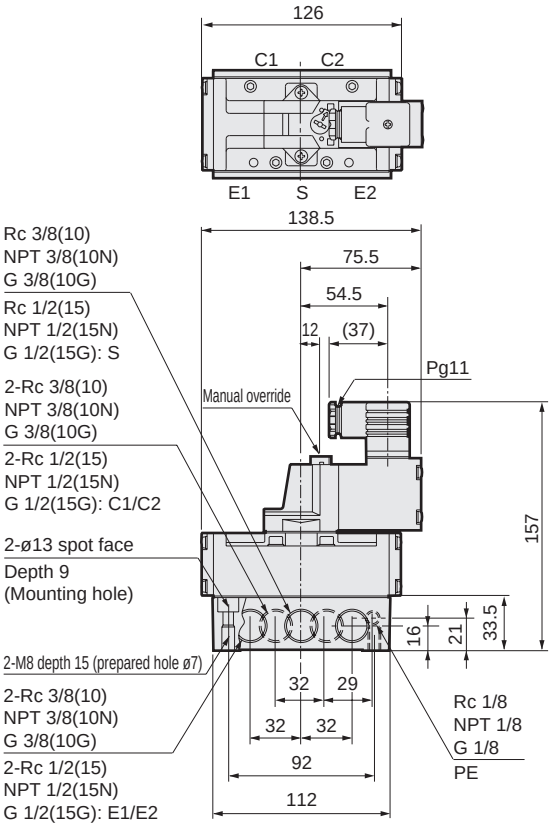

4F520 CAD

● 2-position double solenoid: DIN terminal box
DIN terminal box/with lamp (L)

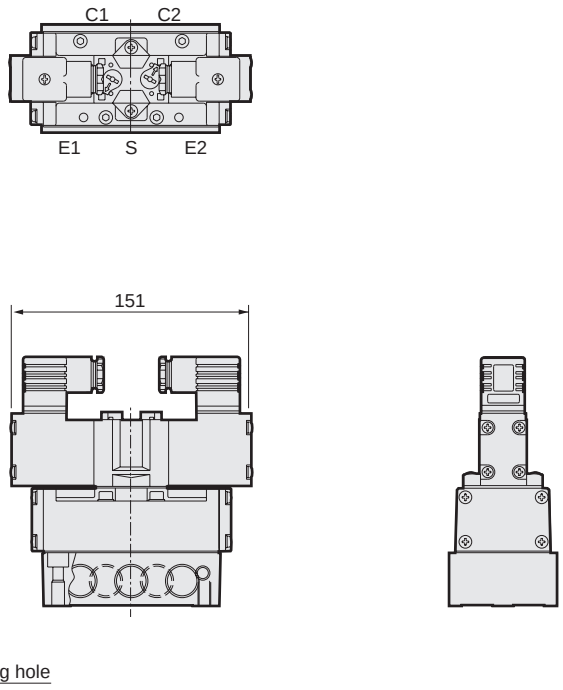

4F5 3 4 5 0 CAD

● 3-position: DIN terminal box
DIN terminal box/with lamp (L)

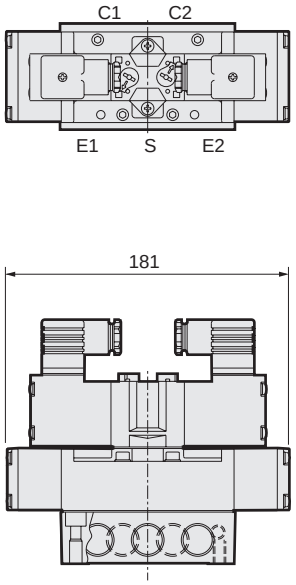

● Installation feet: (P)
Material: Hot-rolled steel plates
Zinc plated

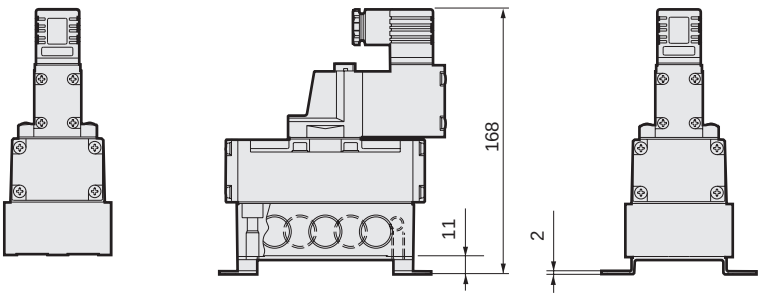

* Refer to page 1446 for details about check valves.

Dimensions

2-position single

2-position double solenoid/3-position
* 2-position double solenoid shown in image.

● DIN terminal box: (F)

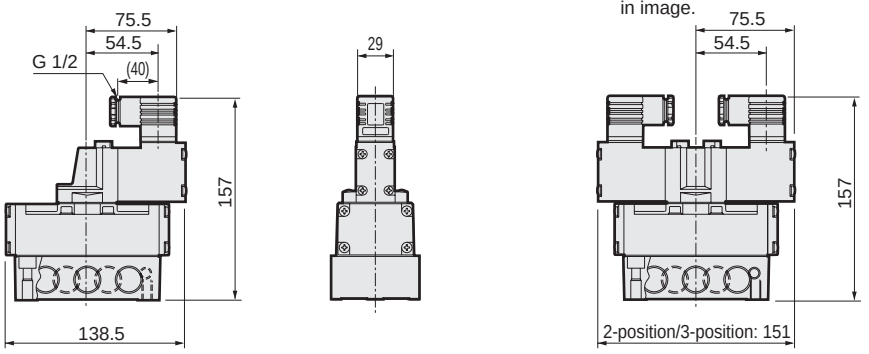

● Grommet lead wire: (E)

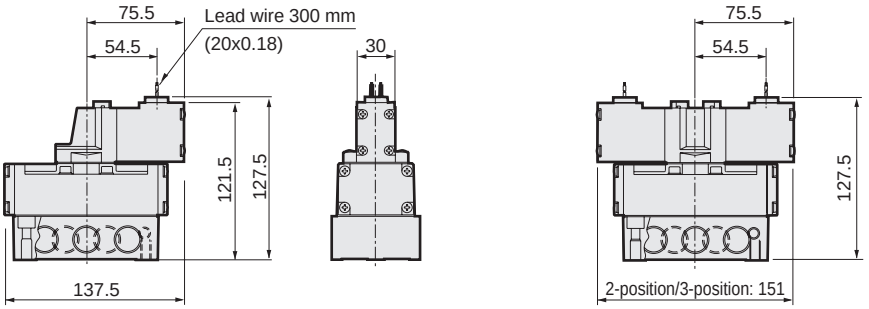

● Conduit lead wire: (E1/E2)

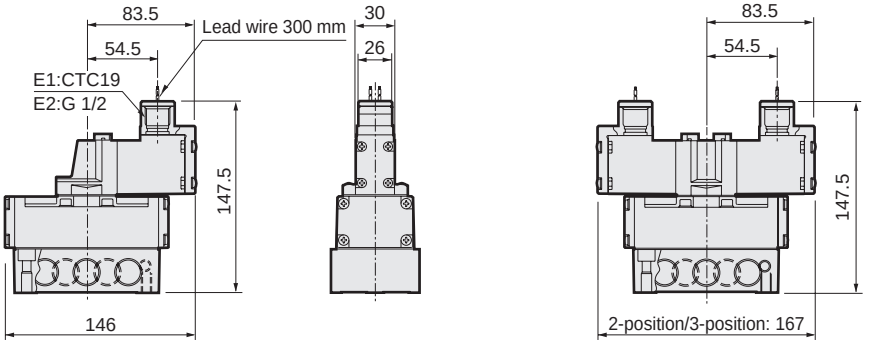

● Round terminal box: (B1/B/BL/G/GL)

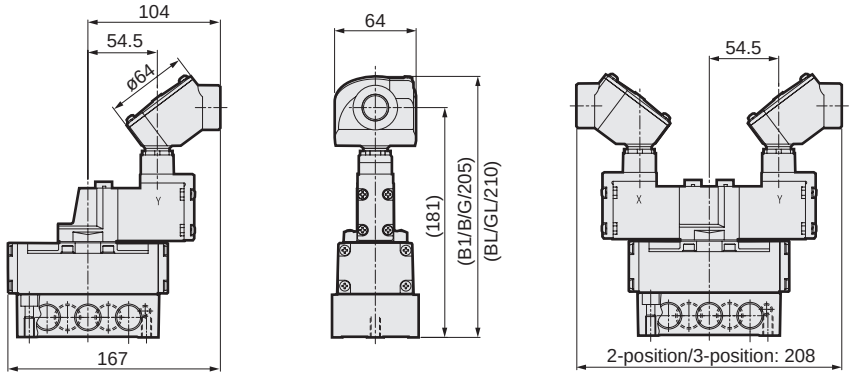

● External pilot port: (K)



Dimensions

4F610 CAD

● 2-position single: DIN terminal box
DIN terminal box/with lamp (L)

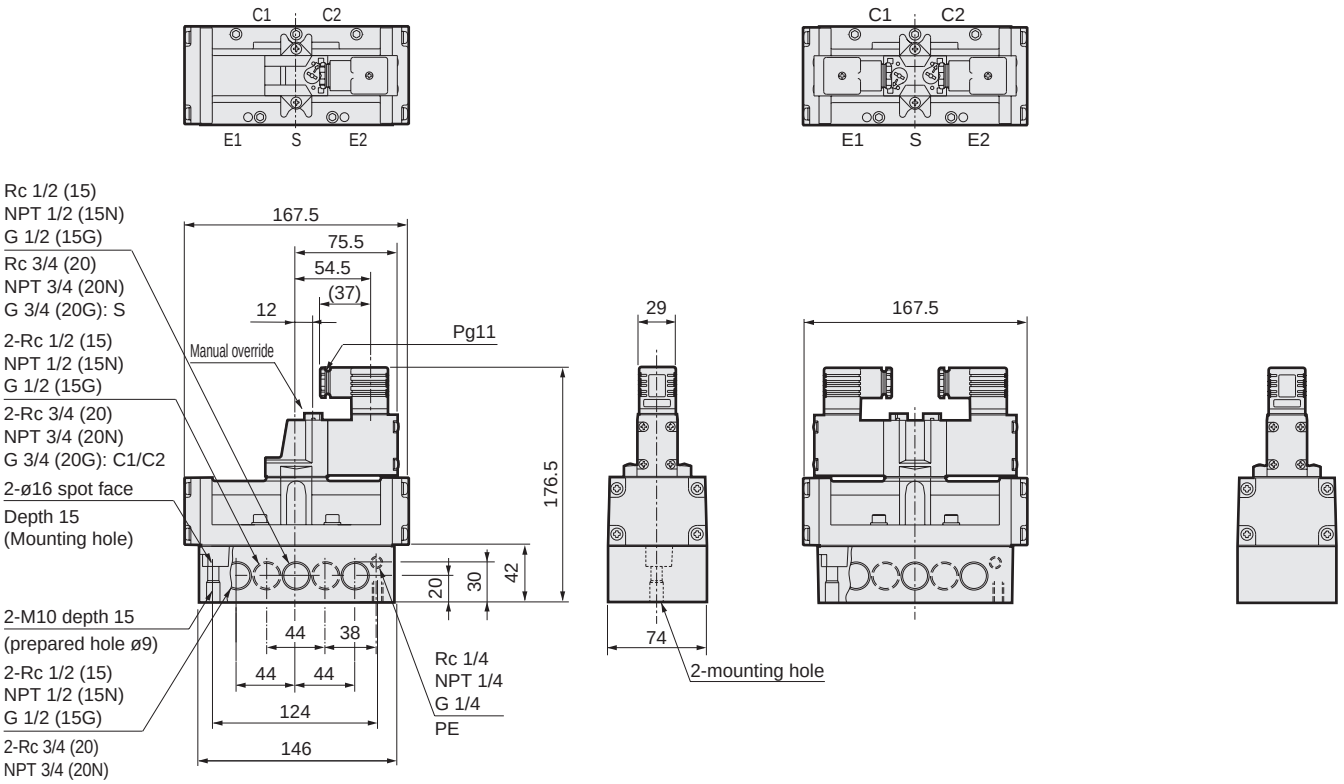

4F620 CAD

● 2-position double solenoid: DIN terminal box
DIN terminal box/with lamp (L)

4F6 3 4 5 0 CAD

● 3-position: DIN terminal box
DIN terminal box/with lamp (L)

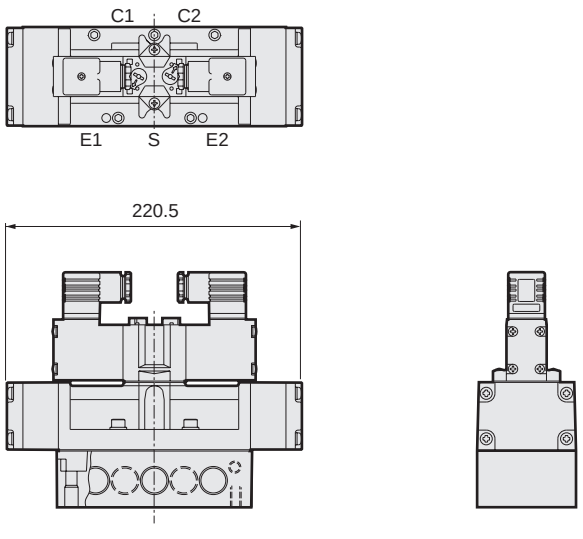

● Installation feet: (P)
Material: Cold-rolled steel plates
Zinc plated

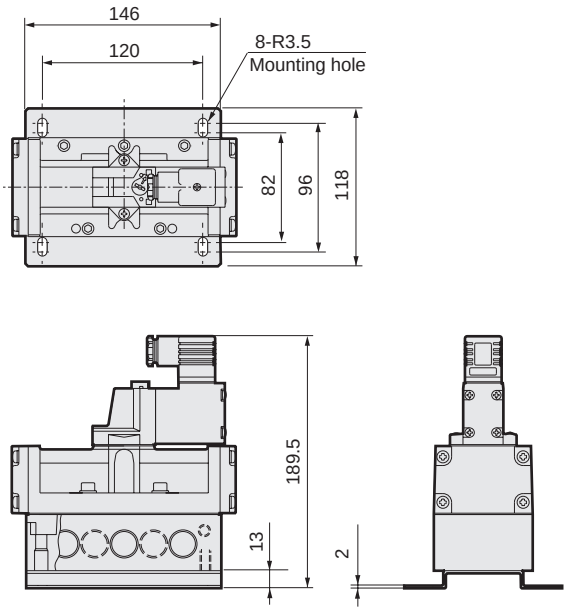

* Refer to page 1446 for details about check valves.

Dimensions

● DIN terminal box: (F)

2-position single

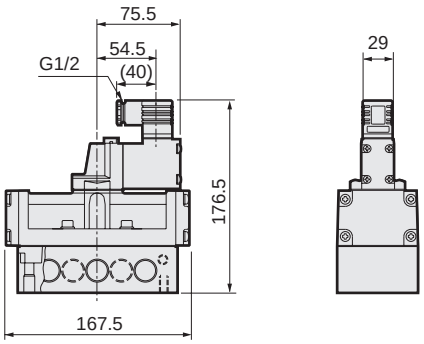

2-position double solenoid/3-position
* 2-position double solenoid shown in image.

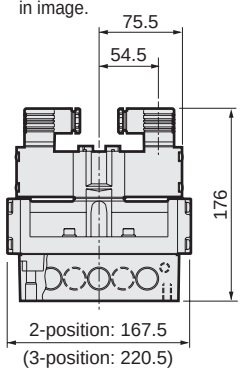

● Grommet lead wire: (E)

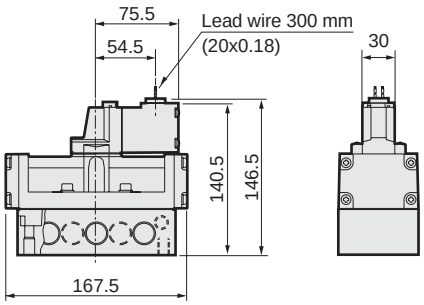

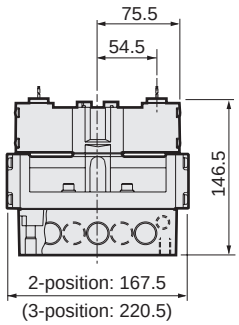

● Conduit lead wire: (E1/E2)

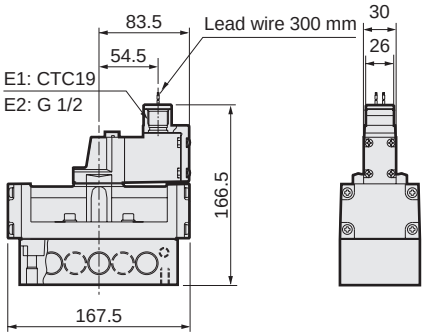

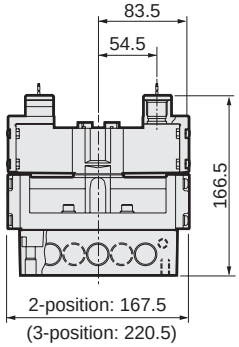

● Round terminal box: (B1/B/BL/G/GL)

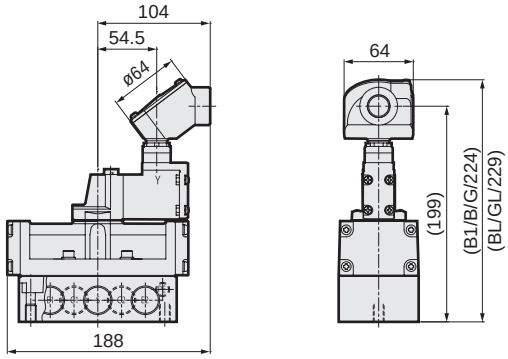

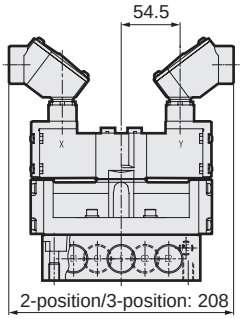

● External pilot port: (K)

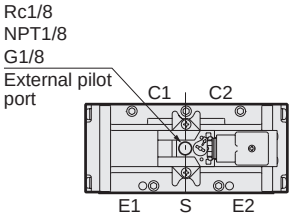

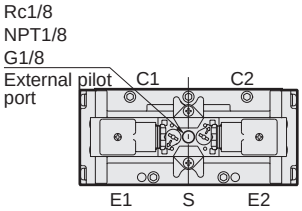

Dimensions

4F710 CAD

● 2-position single: DIN terminal box
DIN terminal box with lamp(L)

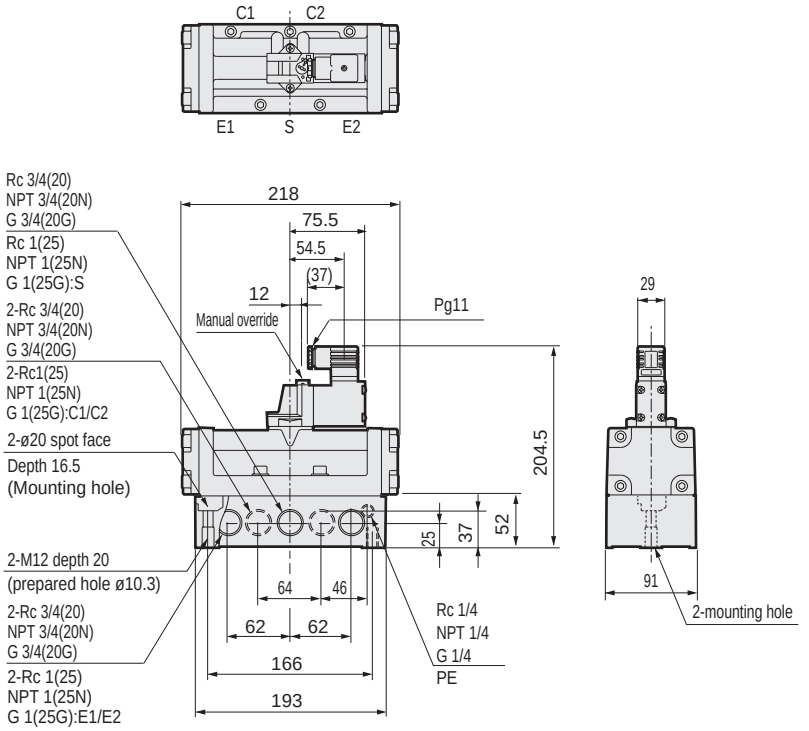

4F720 CAD

● 2-position double solenoid: DIN terminal box
DIN terminal box with lamp(L)

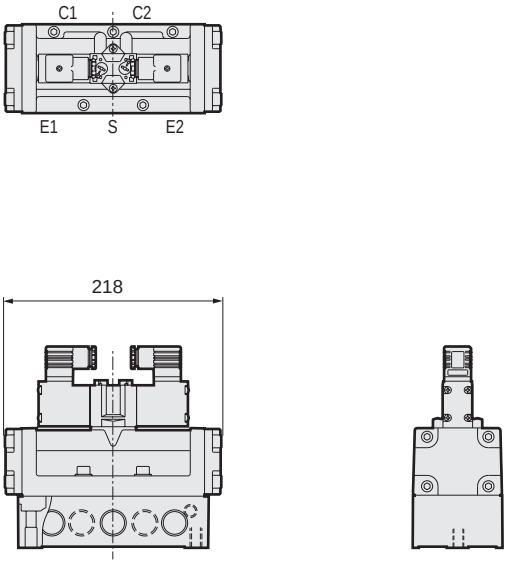

4F7$^{3}_{4}_{5}$0 CAD

● 3-position: DIN terminal box
DIN terminal box with lamp(L)

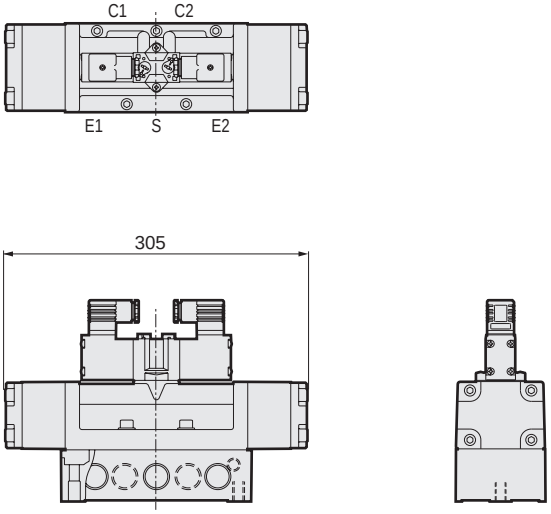

● Installation feet: (P)
Material:Cold-rolled steel plates
Zinc plated

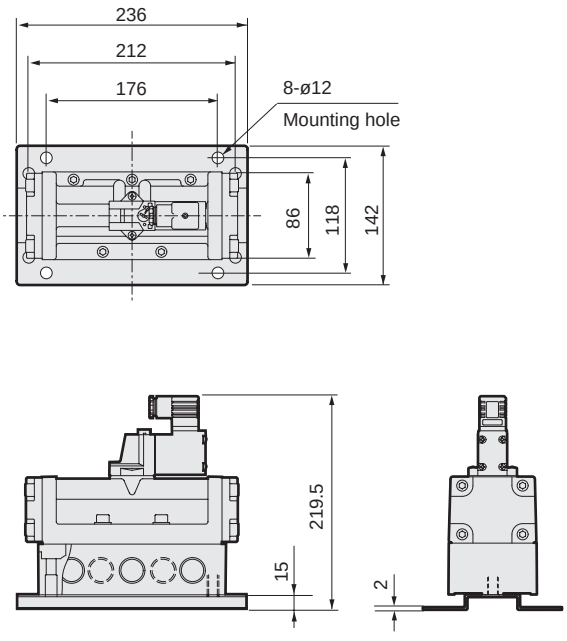

* Refer to page 1446 for details about check valves.

Dimensions

● DIN terminal box: (F)

2-position single

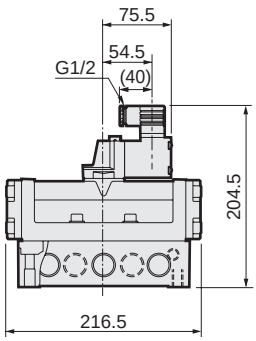

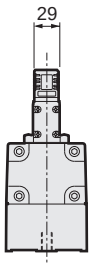

2-position double solenoid/3-position
* 2-position double solenoid shown in image.

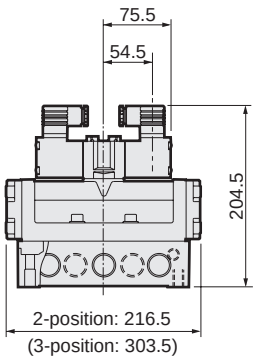

● Grommet lead wire: (E)

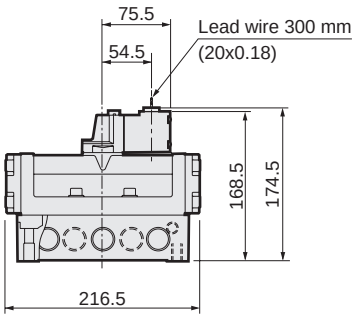

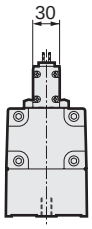

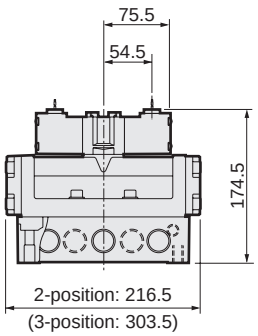

● Conduit lead wire: (E1/E2)

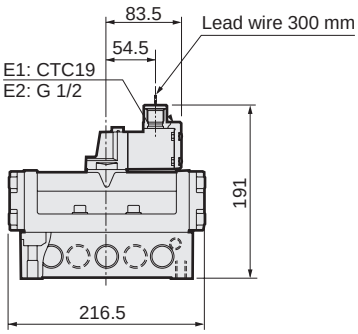

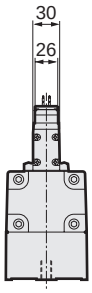

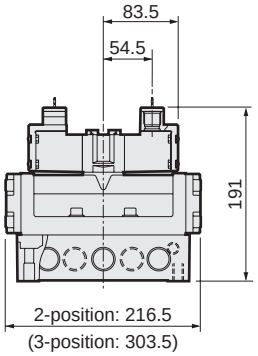

● Round terminal box: (B1/B/BL/G/GL)

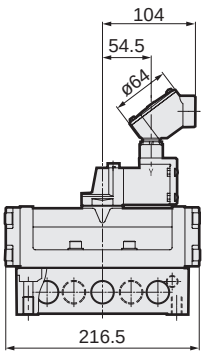

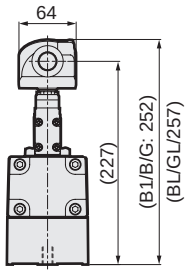

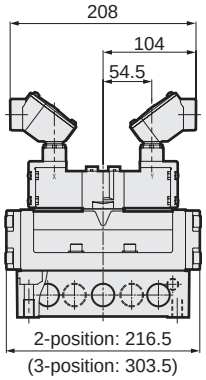

● External pilot port: (K)

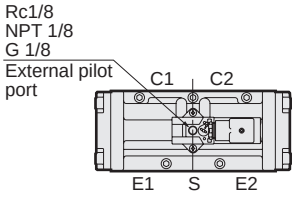

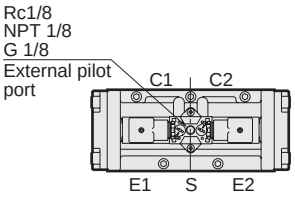

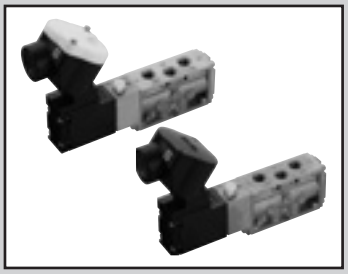

Discrete valve/body piping
Pilot operated 5-port pneumatic valve

4F2/3 Series
Outdoor options

● Cylinder bore size: ø40 to ø100

RoHS CAD

JIS symbol

● 5-port valve

2-position single

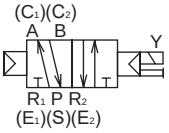

2-position double

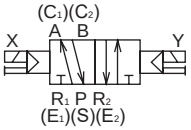

3-position all ports closed

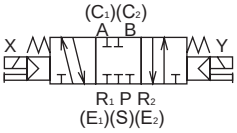

3-position A/B/R connection

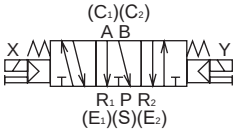

3-position P/A/B connection

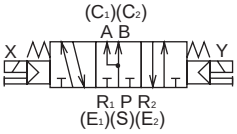

Common specifications

Item		Description
Valve and operation		Pilot operated soft spool valve
Working fluid		Compressed air
Max. working pressure	MPa	1.0 (≈150 psi, 10 bar)
Min. working pressure	MPa 2-position	0.1 (≈15 psi, 1 bar)
	MPa 3-position	0.15 (≈22 psi, 1.5 bar)
Proof pressure	MPa	1.5 (≈220 psi, 15 bar)
Ambient temperature	°C	-10 (14°F) to 60 (140°F) (*1)
Fluid temperature	°C	5 (41°F) to 60 (140°F)
Lubrication		Not required (*2)
Degree of protection		IP65
Vibration resistance	m/s^2	50 or less
Shock resistance	m/s^2	300 or less
Atmosphere		Corrosive gas environment prohibited
Weight		

*1: The ambient temperature indicates the temperature for storage and upon installation, which will differ from the fluid temperature during operation.
*2: Use turbine oil ISO VG32 for lubrication.

Electrical specifications

Item			Description
Rated voltage V	AC		100, 200, 110, 220 (50/60 Hz)
	DC		12.24
Voltage fluctuation range			±10%
Starting current A	AC	100 V	0.170/0.140
		200 V	0.090/0.070
		110 V	0.150/0.130
		220 V	0.080/0.060
	DC	12 V	0.500
		24 V	0.250
Holding current A	AC	100 V	0.100/0.080
		200 V	0.050/0.040
		110 V	0.090/0.070
		220 V	0.050/0.040
	DC	12 V	0.500
		24 V	0.250
Power consumption W	AC	100 V	5.0/4.0
		200 V	5.0/4.0
		110 V	5.0/4.0
		220 V	5.0/4.0
	DC	12 V	6.0
		24 V	6.0
Thermal class			B (molded coil)

Reference: Rated voltage 100 VAC 50/60Hz can be used at 110 VAC 60Hz, and 200 VAC 50/60Hz at 220 VAC 60Hz.

Individual specifications

Item			4F2	4F3
Weight kg	2-position	Single	0.82	0.92
		Double	1.37	1.48
	3-position		1.50	1.67

Performance/characteristics by model

Item		4F2	4F3
Response time	ms	50	50

*1: The response times are values with working pressure of 0.5 MPa, without lubrication, and with the power ON. They depend on the pressure and the lubricant quality.

Flow characteristics

Model No.	Solenoid position		Port size	Sonic conductance C[dm^3/(s·bar)]	Critical pressure ratio b
4F2	2-position	Single	Rp1/4 NPT1/4 G1/4	3.0	0.33
		Double			
	3-position	All ports closed		2.5	0.43
		A/B/R connection			
4F3	2-position	Single	Rp1/4 NPT1/4 G1/4	3.9	0.42
		Double			
	3-position	All ports closed		4.0	0.35
		A/B/R connection		4.5	0.42
		P/A/B connection		4.0	0.35
	2-position	Single	Rp3/8 NPT3/8 G3/8	5.8	0.42
		Double			
	3-position	All ports closed		4.4	0.42
		A/B/R connection		5.1	0.46
		P/A/B connection		4.4	0.42

*4: Effective cross-sectional area S and sonic conductance C are converted as S ≈ 5.0 x C.

How to order

4F2 1 0 - 08 - M2 B W ( ) - AC100V

Ⓐ Model No.

Ⓑ Solenoid position

Ⓒ Port size

Ⓓ Manual override

Ⓔ Electrical connections

Ⓕ Other options

Ⓖ Voltage

Code	Description	4F2	4F3
Ⓐ Model No.			
4F2	4F2 Series	●	
4F3	4F3 Series		●
Ⓑ Solenoid position			
1	2-position single	●	●
2	2-position double	●	●
3	3-position all ports closed	●	●
4	3-position ABR connection	●	●
5	3-position PAB connection		●
Ⓒ Port size			
08	Rp1/4	●	●
10	Rp3/8		●
08N	NPT1/4	●	●
10N	NPT3/8		●
08G	G1/4	●	●
10G	G3/8		●
Ⓓ Manual override *1			
Blank	Locking (resin)	●	●
M2	Non-locking (metal)	●	●
M3	Locking with manual lever (resin)	●	●
R	Position change of manual override	●	●
Ⓔ Electrical connections			
B1	Round terminal box (G3/4)	●	●
B	Round terminal box (G1/2)	●	●
BL	Round terminal box (G1/2)/with lamp (*2)	●	●
G	Round terminal box (G1/2) With gland (A-15a)	●	●
GL	Round terminal box (G1/2) with lamp (*2) Gland (A-15a) attached	●	●
Ⓕ Other options			
Blank	No option	●	●
S	Surge suppressor (varistor) included	●	●
H	With check valve (applicable: 3-position all ports closed)	●	●
N	Plug attached (for 3-port valve)	●	●
NC	3-port valve specs plug assembly (C1 (A), E1 (R1))	●	●
NO	3-port valve specs plug assembly (C2 (B), E2 (R2))	●	●
Ⓖ Voltage			
AC100V	100 VAC 50/60 Hz	●	●
AC200V	200 VAC 50/60 Hz	●	●
AC110V	110 VAC 50/60 Hz	●	●
AC220V	220 VAC 50/60 Hz	●	●
DC12V	12 VDC (*2)	●	●
DC24V	24 VDC	●	●
*** Other custom order products**			
DC48V		●	●
DC100V		●	●
DC110V		●	●

Precautions for model No. selection

*1: When using the unit in a complete outdoor exposure environment, select the non-locking manual override M2 (metal).
Further, as a metal locking manual override is available as a custom order, contact CKD for details.
*2: 12 VDC models are not available for BL with lamp and GL.
*3: Support with a manifold is not available.
*4: 4F4 to 7 outdoor is available as a custom order.

[Example of model No.]

4F210-08-M2BW-AC100V

Ⓐ Model	: 4F2
Ⓑ Solenoid position	: 2-position single
Ⓒ Port size	: Rp1/4
Ⓓ Manual override	: Non-locking
Ⓔ Electrical connections	: Round terminal box (G1/2)
Ⓕ Other options	: No option
Ⓖ Voltage	: 100 VAC

Dimensions

4F210/4F310

● 2-position single: round terminal box without lamp

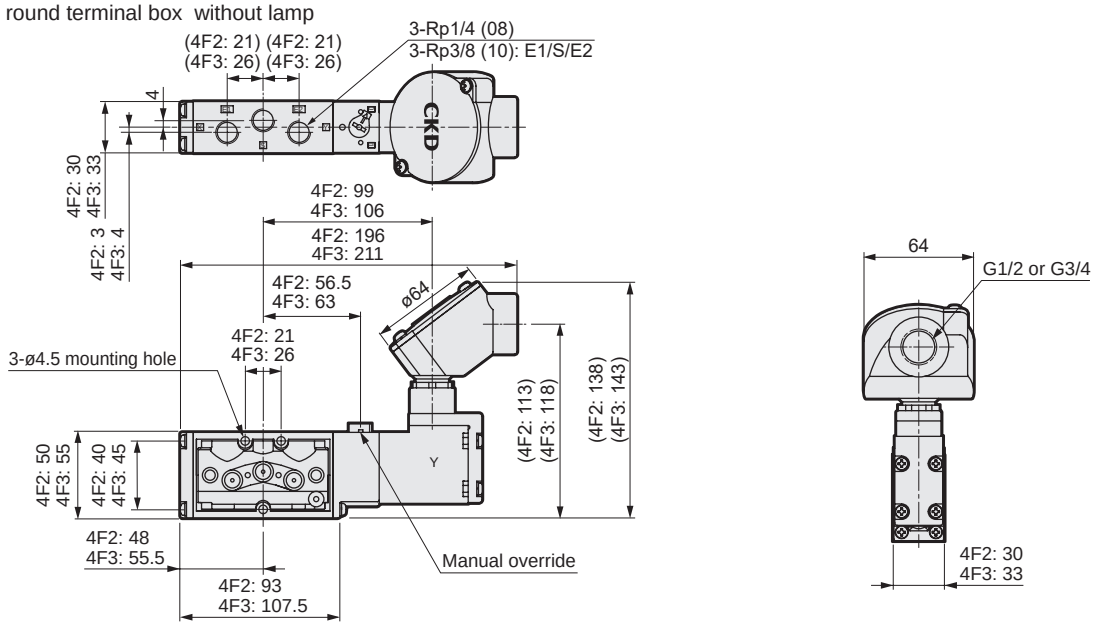

4F220/4F320

● 2-position double solenoid: round terminal box without lamp

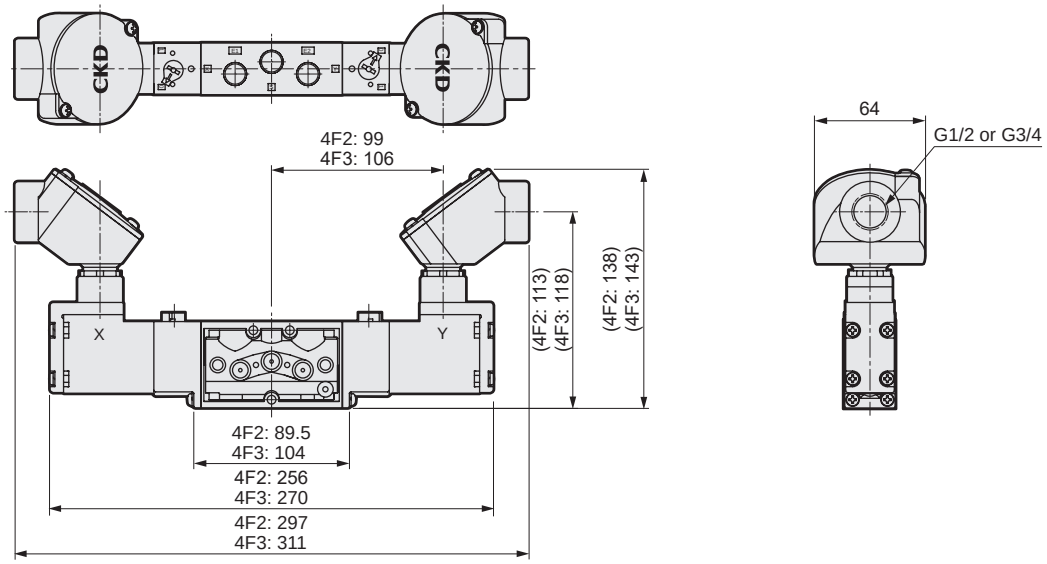

4F2$^{3}_{4}$0/4F3$^{3}_{5}$0

● 3-position: round terminal box without lamp

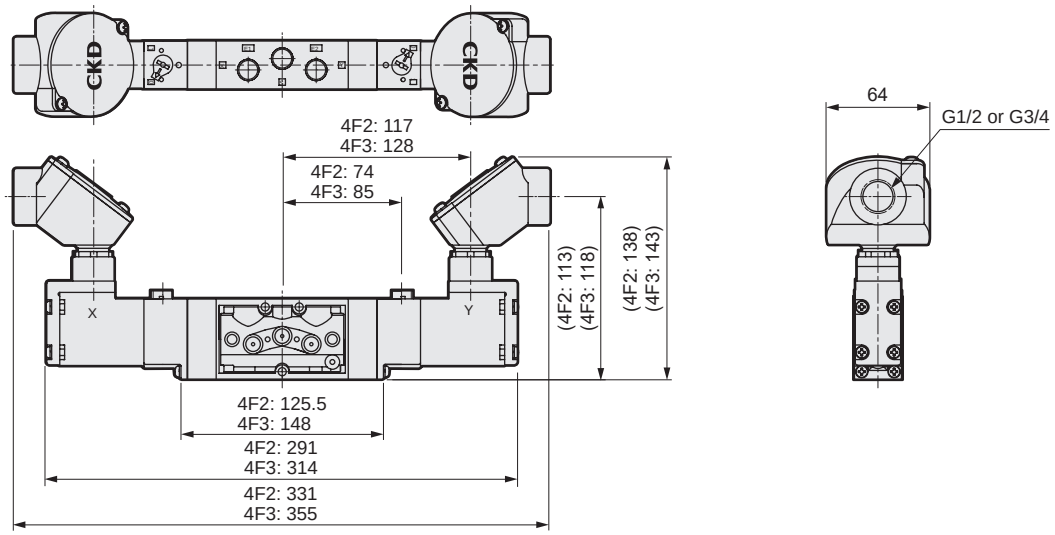

Dimensions

4F210/4F310

● 2-position single: round terminal box with lamp

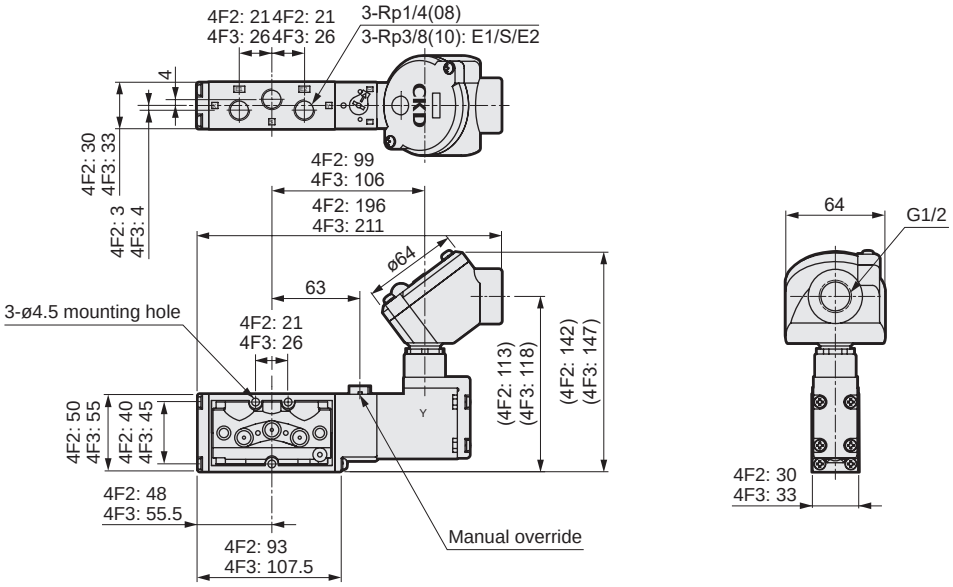

4F220/4F320

● 2-position double solenoid: round terminal box with lamp

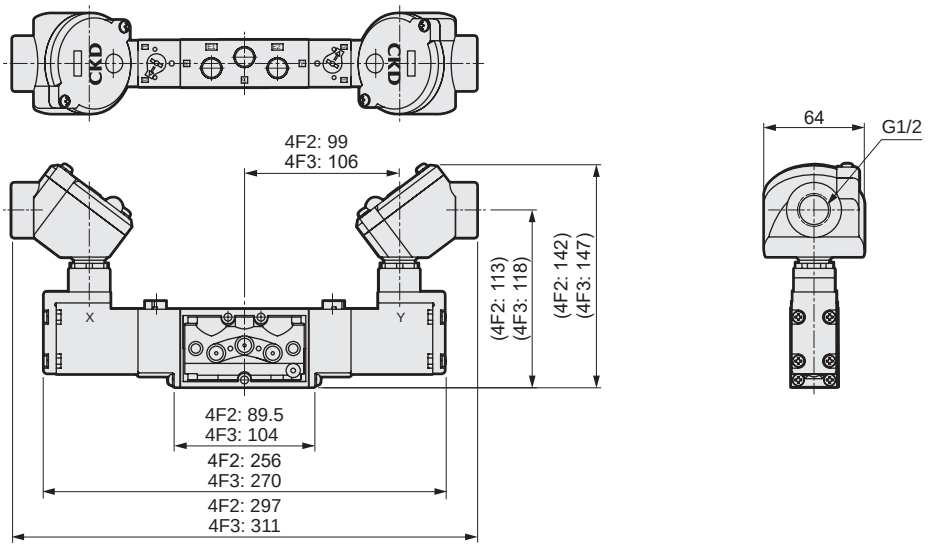

4F2$\frac{3}{4}$0/4F3$\frac{3}{4}_{5}$0

● 3-position: round terminal box with lamp

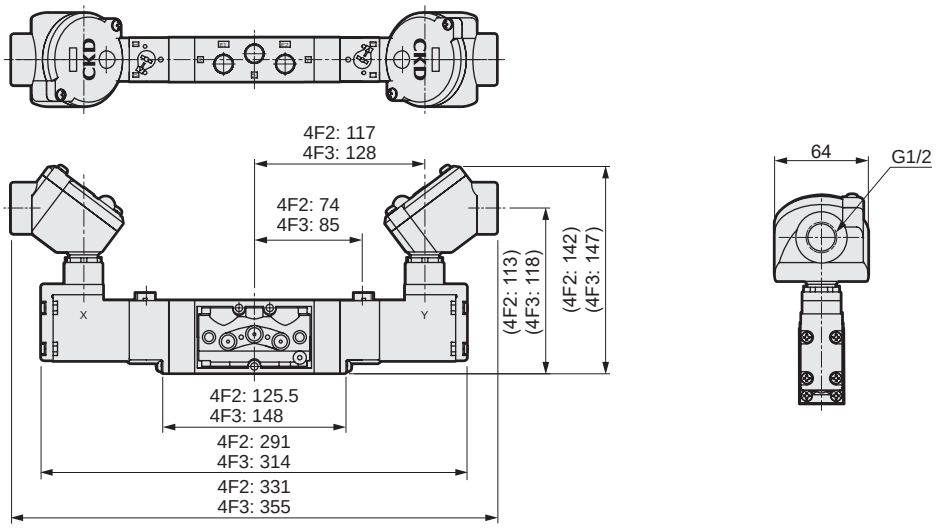

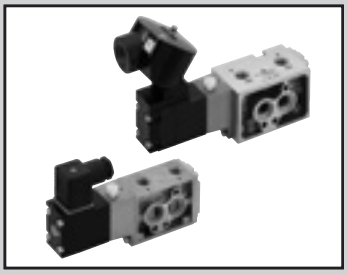

Discrete valve/body piping
Pilot operated 5-port pneumatic valve

4F1/3-NM Series

NAMUR standards option

RoHS

Common specifications

1 MPa ≈ 145.0 psi, 1 MPa = 10 bar

Item	Description
Valve and operation	Pilot operated soft spool valve
Working fluid	Compressed air
Max. working pressure MPa	1.0 (≈145 psi, 10 bar)
Min. working pressure MPa	0.1 (≈15 psi, 1 bar)
Proof pressure MPa	1.5 (≈217 psi, 15 bar)
Ambient temperature °C	-10 (14°F) to 60 (140°F) *1
Fluid temperature °C	5 (41°F) to 60 (140°F)
Lubrication	Not required (use turbine oil ISO VG32 if necessary for lubrication)
Degree of protection	Dust-proof, IP65 (with round terminal box)
Vibration resistance m/s^2	50 or less
Impact resistance m/s^2	300 or less
Atmosphere	Cannot be used in corrosive gas environments

*1: The ambient temperature indicates the temperature for storage and upon installation, which will differ from the fluid temperature during operation.

Electrical specifications

Item			Description
Rated voltage V	AC		100, 200, 110, 220 (50/60 Hz)
	DC		12, 24
Rated voltage fluctuation range			±10%
Starting current A	AC	100 V	0.170/0.140
		200 V	0.090/0.070
		110 V	0.15/0.13
		220 V	0.08/0.06
	DC	12 V	0.500
		24 V	0.250
Holding current A	AC	100 V	0.100/0.080
		200 V	0.050/0.040
		110 V	0.09/0.07
		220 V	0.05/0.04
	DC	12 V	0.500
		24 V	0.250
Power consumption W	AC	100 V	5.0/4.0
		200 V	5.0/4.0
		110 V	5.0/4.0
		220 V	5.0/4.0
	DC	12 V	6.0
		24 V	6.0
Thermal class			B molded coil

Reference: Rated voltage 100 VAC 50/60Hz can be used at 110 VAC 60Hz, and 200 VAC 50/60Hz at 220 VAC 60Hz.

Flow characteristics

Model No.	Solenoid position		Port size	Sonic conductance C[$dm^3/(s \cdot bar)$]
4F1	2-position	Single	Rc1/4 (S, E1, E2)	1.6
		Double		
4F3	2-position	Single		3.1
		Double		

*1: Effective cross-sectional area S and sonic conductance C are converted as S ≈ 5.0 × C.

How to order

4F3 1 0 - NM - M2 B ( ) - AC100V

Code	Description	4F1	4F3
Ⓐ Model No.			
4F1	4F1 Series	●	
4F3	4F3 Series		●
Ⓑ Solenoid position			
1	2-position single	●	●
2	2-position double	●	●
Ⓒ Port size			
NM	NAMUR standard (port size Rc1/4) (*3)	●	●
Ⓓ Manual override			
Blank	Locking (resin)	●	●
M2	Non-locking (metal)	●	●
M3	Locking with manual lever (resin)	●	●
R	Position change of manual override	●	●
Ⓔ Electrical connections			
Blank	DIN terminal box (Pg11)	●	●
L	DIN terminal box (Pg11) with lamp	●	●
F	DIN terminal box (G1/2)	●	●
E	Grommet lead wire	●	●
E1	Conduit lead wire (CTC19)	●	●
E2	Conduit lead wire (G1/2)	●	●
B1	Round terminal box (G3/4)	●	●
B	Round terminal box (G1/2)	●	●
BL	Round terminal box (G1/2) with lamp (*4)	●	●
G	Round terminal box (G1/2) With gland (A-15a)	●	●
GL	Round terminal box (G1/2) with lamp (*4) Gland (A-15a) included	●	●
Ⓕ Other options			
Blank	No option	●	●
W	Outdoor specification (*5) (*6)	●	●
S	Surge suppressor (varistor) included	●	●
Ⓖ Voltage			
AC100V	100 VAC 50/60 Hz	●	●
AC200V	200 VAC 50/60 Hz	●	●
AC110V	110 VAC 50/60 Hz	●	●
AC220V	220 VAC 50/60 Hz	●	●
DC12V	12 VDC (*4)	●	●
DC24V	24 VDC	●	●
*** Other made-to-order products**			
DC48V		●	●
DC100V		●	●
DC110V		●	●

⚠ Precautions for model No. selection

*1 : For 4F1, the repair parts, etc. of the body are 4F1 standard products. 4F3 products are used in coil assembly.
*2 : Note that with 4F3, the repair parts of the body are dedicated parts.
*3 : The piping port is Rc1/4 only.
The threads of port C1/C2 on the NAMUR face have not been machined.
*4 : 12 VDC is not supported for BL with lamp or GL.
*5 : When selecting W: Outdoor specification, only the round terminal box is available.
*6 : For 4F1-W: Outdoor specification, the PE exhaust and breathing hole are connected to atmosphere. Install with an orientation preventing the direct ingress of rainwater, etc.

[Example of model No.]

4F310-NM-M2BW-AC100V

Ⓐ Model : 4F3
Ⓑ Solenoid position : 2-position single
Ⓒ Port size : Rc1/4
Ⓓ Manual override : Non-locking
Ⓔ Electrical connections : Round terminal box (G1/2)
Ⓕ Other options : None
Ⓖ Voltage : 100 VAC

Dimensions

● 4F110-NM
2-position single: DIN terminal box: (blank)
DIN terminal box with lamp: (L)

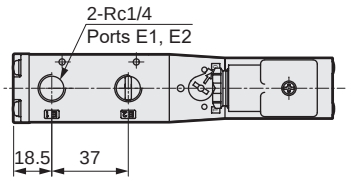

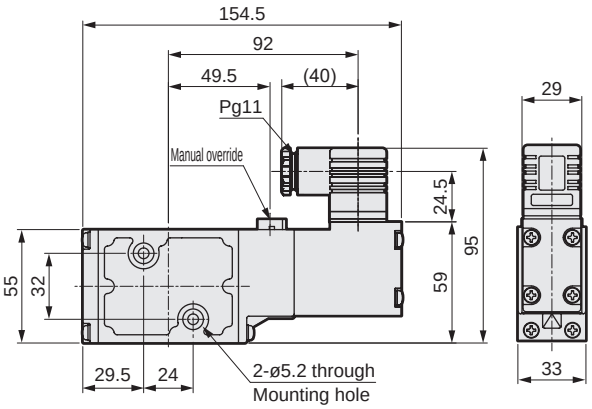

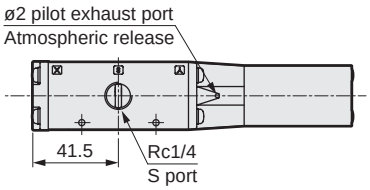

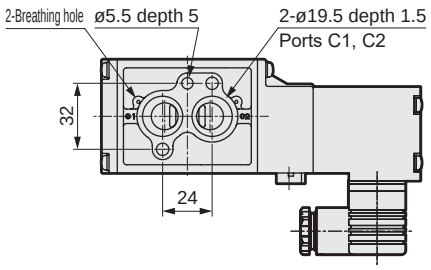

● 4F120-NM
2-position double: DIN terminal box: (blank)
DIN terminal box with lamp: (L)

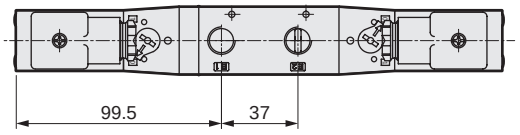

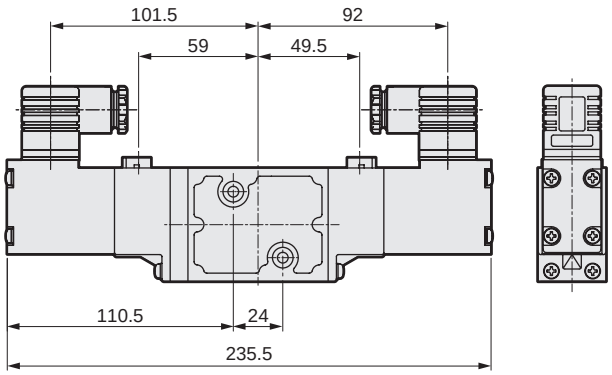

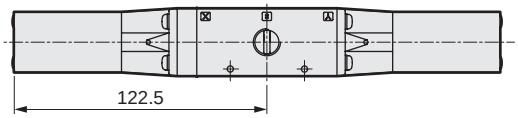

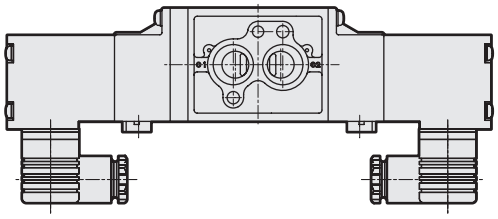

Dimensions

● 2-position single
DIN terminal box: (F)

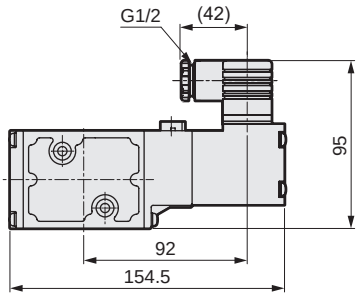



● 2-position double

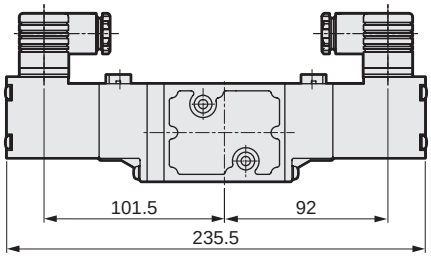

Grommet lead wire: (E)

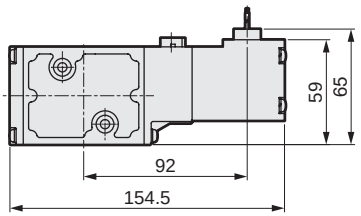

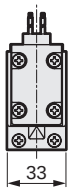

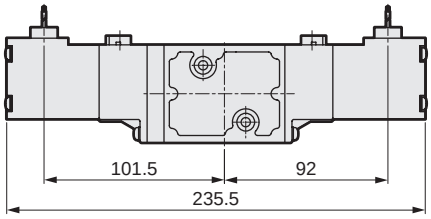

Conduit lead wire: (E1/E2)

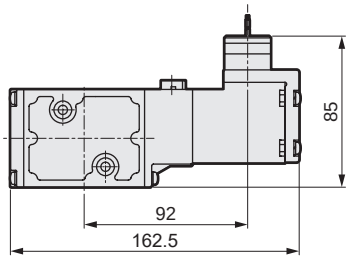

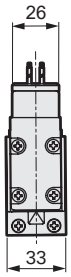

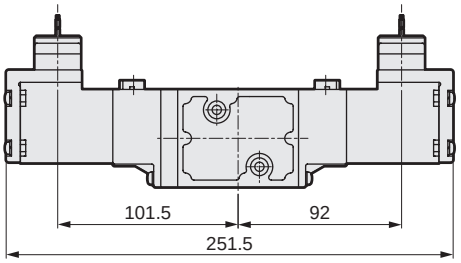

Round terminal box: (B1/B/BL/G/GL)

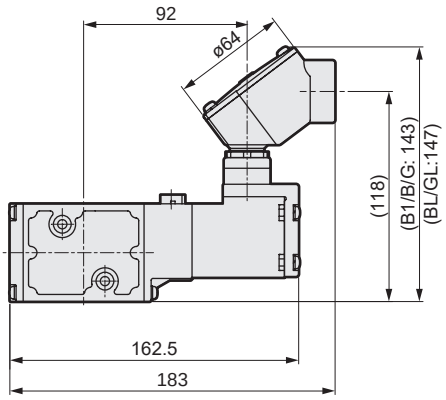

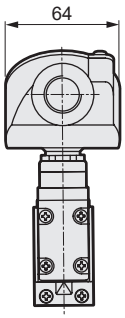

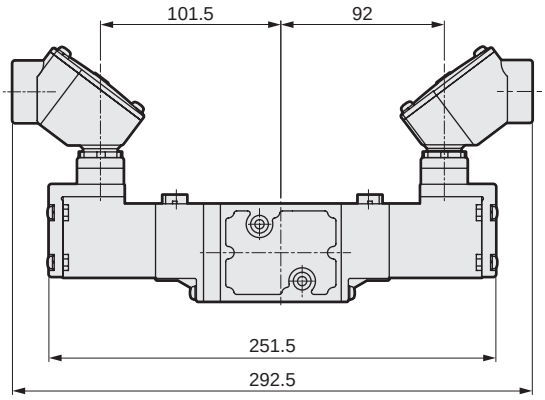

Position change of manual override: (R)

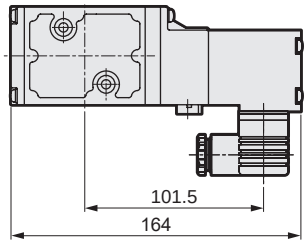

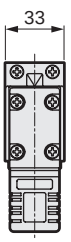

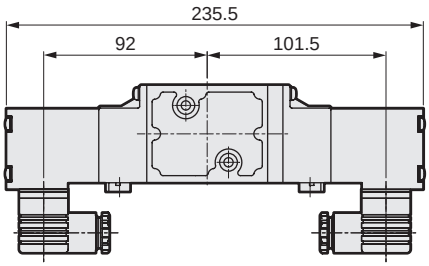

Dimensions

● 4F310-NM
2-position single: DIN terminal box: (blank)
DIN terminal box with lamp: (L)

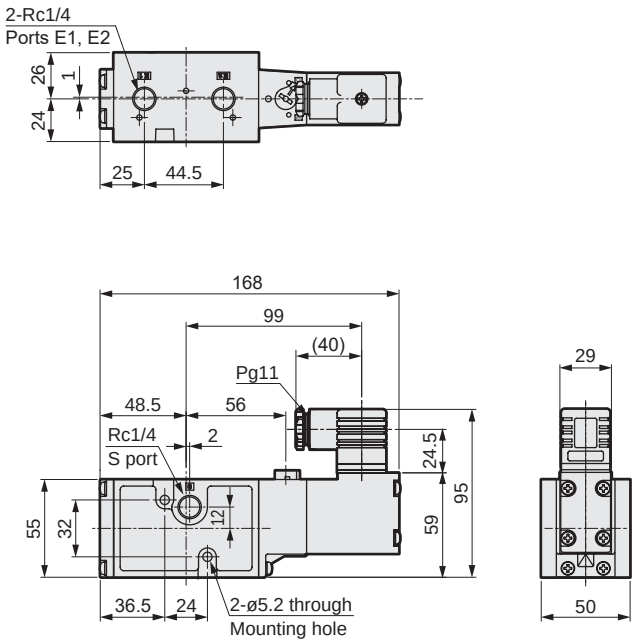

● 4F320-NM
2-position double: DIN terminal box: (blank)
DIN terminal box with lamp: (L)

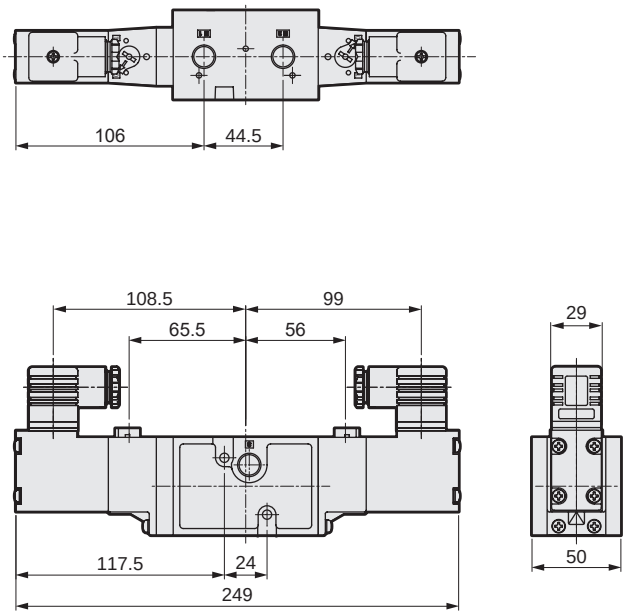

Dimensions

● 2-position single
DIN terminal box: (F)

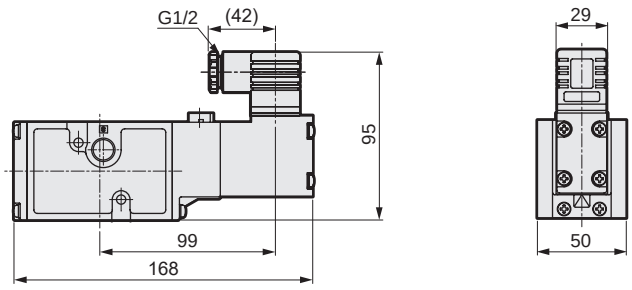

● 2-position double

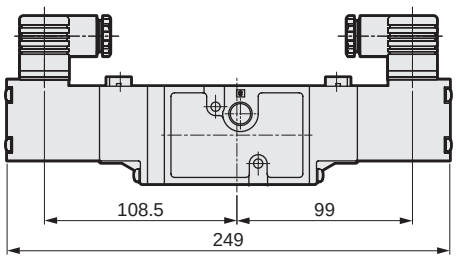

Grommet lead wire: (E)

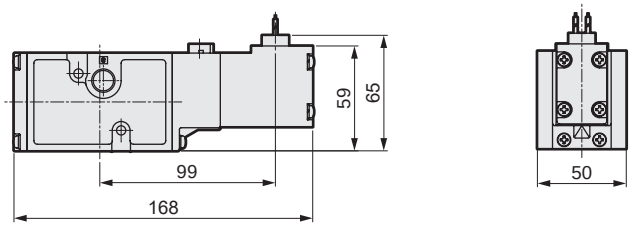

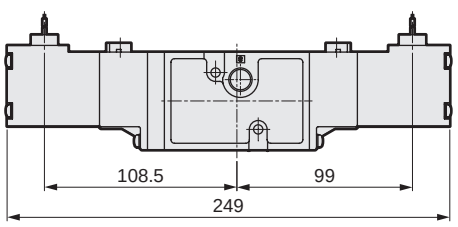

Conduit lead wire: (E1/E2)

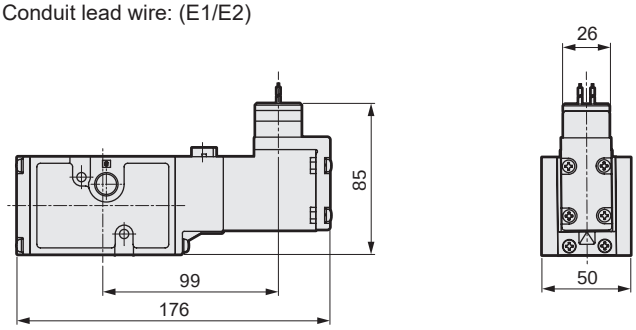

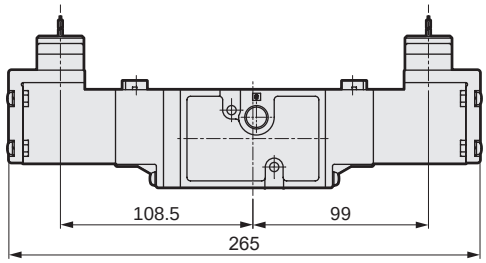

Round terminal box: (B1/B/BL/G/GL)

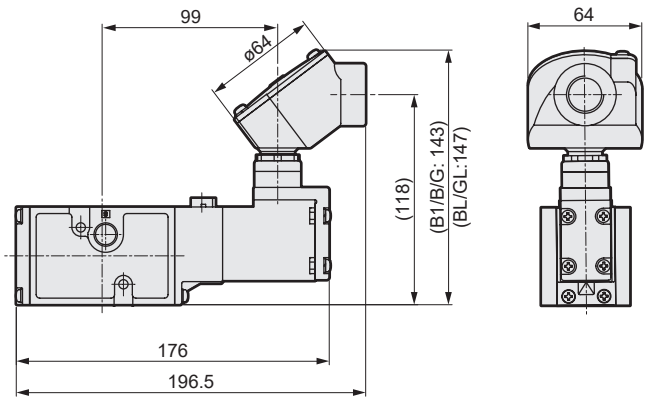

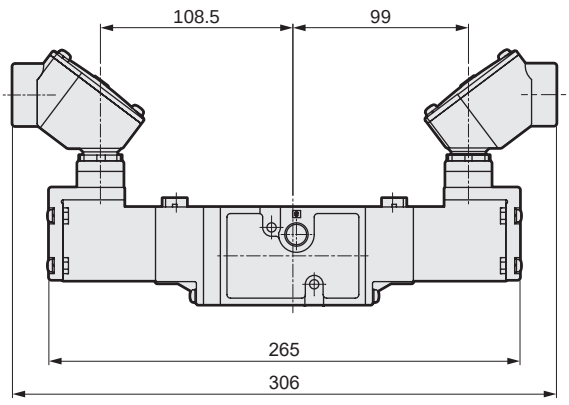

Position change of manual override: (R)

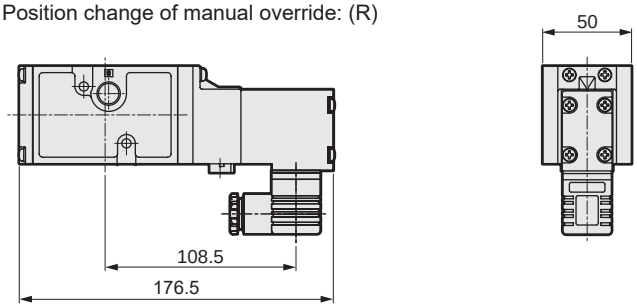

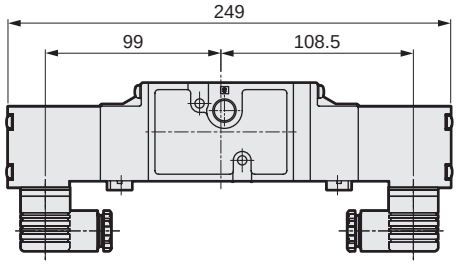

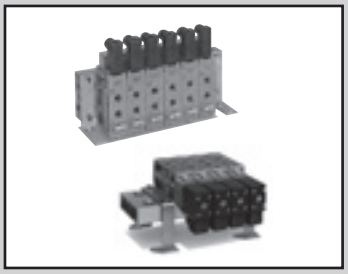

Individual wiring manifold/body piping
Pilot operated 5-port pneumatic valve

(A)M4F0/1/2/3 Series

● Cylinder bore size: ø16 to ø100

CE Refer to the Ending for details.

RoHS CAD

JIS symbol

● 5-port valve
2-position single

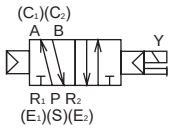

2-position double

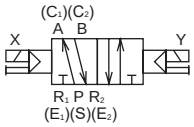

3-position all ports closed

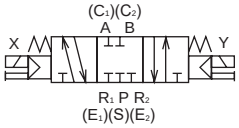

3-position A/B/R connection

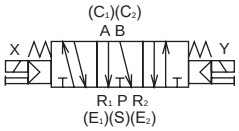

3-position P/A/B connection

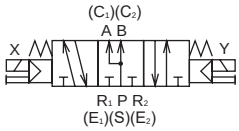

Common specifications

Item	Description
Manifold method	Manifold integrated
Manifold	Common supply/common exhaust
Station No.	2 to 10 stations
Valve and operation	Pilot operated soft spool valve
Working fluid	Compressed air
Max. working pressure MPa	1.0 (≈150 psi, 10 bar)
Min. working pressure MPa	Refer to Individual specifications listed below
Proof pressure MPa	1.5 (≈220 psi, 15 bar)
Ambient temperature °C (*1)	-10 (14°F) to 60 (140°F) (no freezing)
Fluid temperature °C	5 (41°F) to 60 (140°F)
Lubrication	Not required (turbine oil ISO VG32 if necessary for lubrication)
Degree of protection	Dust-proof
Vibration resistance m/s²	50 or less
Shock resistance m/s²	300 or less
Atmosphere	Cannot be used in corrosive gas environment.

*1: The ambient temperature indicates the temperature for storage and upon installation, which will differ from the fluid temperature during operation.

Electrical specifications

Item			(A)4F0 to 1	4F2/3
Rated voltage V	AC		100, 200 (50/60 Hz)	
	DC		12, 24	
Voltage fluctuation range			±10%	
Starting current A	AC	100 V	0.056 / 0.044	0.170 / 0.140
		200 V	0.034 / 0.026	0.090 / 0.070
	DC	12 V	0.150	0.500
		24 V	0.075	0.250
Holding current A	AC	100 V	0.028 / 0.022	0.100 / 0.080
		200 V	0.017 / 0.013	0.050 / 0.040
	DC	12 V	0.150	0.500
		24 V	0.075	0.250
Power consumption W	AC	100 V	1.8 / 1.4	5.0 / 4.0
		200 V	2.1 / 1.6	5.0 / 4.0
	DC	12 V	1.8	6
		24 V	1.8	6
Thermal class			B (molded coil)	

Reference: Rated voltage 100 VAC 50/60Hz can be used at 110 VAC 60Hz, and 200 VAC 50/60Hz at 220 VAC 60Hz.

Individual specifications

1 MPa = 10 bar

Item			(A)4F0 *1		4F1		4F2	4F3	
Min. working pressure MPa	2-position	Single	0.15 (≈22 psi)		0.15 (≈22 psi)		0.10 (≈15 psi)	0.10 (≈15 psi)	
		Double			0.10 (≈15 psi)				
	3-position	All ports closed	-		0.20 (≈29 psi)		0.15 (≈22 psi)	0.15 (≈22 psi, 1.5 bar)	
		A/B/R connection							
		P/A/B connection			-		-		
Port size	P (S) port		Rc 1/8 NPT 1/8 G 1/8		Rc 1/4 NPT 1/4 G 1/4		Rc 3/8 NPT 3/8 G 3/8	Rc 1/2 NPT 1/2 G 1/2	
	R₁(E₁),R₂(E₂) port		Rc 1/8 NPT 1/8 G 1/8		Rc 1/8 NPT 1/8 G 1/8		Rc 3/8 NPT 3/8 G 3/8	Rc 1/2 NPT 1/2 G 1/2	
	A(C₁), B(C₂) port		M5	Rp 1/8 NPT 1/8 G 1/8	Rp 1/8 NPT 1/8 G 1/8	Rp 1/4 NPT 1/4 G 1/4	Rp 1/4 NPT 1/4 G 1/4	Rp 1/4 NPT 1/4 G 1/4	Rp 3/8 NPT 3/8 G 3/8

*1: With the single, (A) is A4F010.

Performance/characteristics by model

Item	(A)4F0	4F1	4F2	4F3
Response time *2 ms	30	30	50	50

*2: The response time is the value at 0.5 MPa supply pressure, with no lubrication, and with the power ON. It depends on the pressure and the lubricant quality.

Weight

Model No.			M4F0	M4F1		M4F2		M4F3	
Exhaust installation method			*L, *U	*L, *U	I	*L, *U	I	*L, *U	C, I
Weight calculation formula kg	2-position	Single	0.19xn+0.19	0.29xn+0.26	0.23xn+0.14	0.82xn+0.54	0.71xn+0.36	1.04xn+0.98	0.70xn+0.45
		Double	0.24xn+0.19	0.35xn+0.26	0.29xn+0.14	1.15xn+0.54	1.04xn+0.36	1.36xn+0.98	1.02xn+0.45
(n: Station No.)	3-position		-	0.42xn+0.26	0.36xn+0.14	1.28xn+0.54	1.17xn+0.36	1.55xn+0.98	1.21xn+0.45

Flow characteristics

Model No.	Solenoid position		Port size	C[dm³/(s·bar)]	b
(A)4F0 *2	2-position	Single	M5	0.61	0.35
		Double			
	2-position	Single	Rp1/8 NPT1/8 G1/8	0.74	0.27
		Double			
4F1	2-position	Single	Rp1/8,Rp1/4 NPT1/8,NPT1/4 G1/8,G1/4	2.0	0.33
		Double			
	3-position	All ports closed		1.5	0.31
		A/B/R connection		1.6	0.29
4F2	2-position	Single	Rp1/4 NPT1/4 G1/4	3.0	0.33
		Double			
	3-position	All ports closed		2.5	0.43
		A/B/R connection			
4F3	2-position	Single	Rp1/4 NPT1/4 G1/4	3.9	0.42
		Double			
	3-position	All ports closed		4.0	0.35
		A/B/R connection		4.5	0.42
		P/A/B connection		4.0	0.35
	2-position	Single	Rp3/8 NPT3/8 G3/8	5.8	0.42
		Double			
	3-position	All ports closed		4.4	0.42
		A/B/R connection		5.1	0.46
		P/A/B connection		4.4	0.42

*1: Effective cross-sectional area S and sonic conductance C are converted as S ≈ 5.0 x C.
*2: With the single type, (A) is A4F010.

CE marking specifications

** - Voltage - **ST**

• Standard voltage of 24 VDC or less is CE marking-compatible even if the model No. is not indicated with "ST".

Copper and PTFE free specifications

● Copper- and PTFE-based materials are not used in the flow path.

** - Voltage - **P6**

(4F0 is not available.)

How to order individual wiring manifold, body piping

● Single solenoid valve for manifold

4F3 1 0 - 08 - M2 L ——— AC100V

4F3 1 9 - 08 - M2 L ——— ● - AC100V

Refer to the following precautions.

* Be sure to fill in "Manifold specifications sheet" (pages 1448 and 1449).

● Manifold

M 4F3 1 0 - 08 - M2 L ● - 3 - CU - AC100V — S_1 S_2 S_3 S_4 S_5 MP

4F3: up to S5
4F1/2: up to S4
4F0: up to S2

Indicate the quantity display position of each valve function when using a mix manifold. Refer to page 1414.

Ⓐ Model No.

Ⓑ Solenoid position

Ⓒ Port size

Ⓓ Manual override

Ⓔ Electrical connections

Ⓕ Other options

Ⓖ Station No.

Ⓗ Exhaust installation method

Ⓘ Voltage

Code	Description	Ⓐ Model No. (A)4F0 (*2)	4F1	4F2	4F3
Ⓑ Solenoid position					
1	2-position single	●	●	●	●
2	2-position double	●	●	●	●
3	3-position all ports closed		●	●	●
4	3-position A/B/R connection		●	●	●
5	3-position P/A/B connection				●
8	Mix manifold (for multiple solenoid positions)	●	●	●	●
Ⓒ Port size					
M5	M5	●			
06	Rp1/8	●	●		
08	Rp1/4		●	●	●
10	Rp3/8				●
06N	NPT 1/8	●	●		
08N	NPT 1/4		●	●	●
10N	NPT 3/8				●
06G	G 1/8	●	●		
08G	G 1/4		●	●	●
10G	G 3/8				●
Ⓓ Manual override					
M1	Locking	●	●		
Blank	Locking			●	●
Blank	Non-locking	●	●		
M2	Non-locking			●	●
M3	Locking with manual lever			●	●
M4	Dust cover equipped non-locking	●	●		
M6	Non-locking upward direction	●	●		
R	Position change of manual override	●	●	●	●
Ⓔ Electrical connections					
Refer to the next page for electrical connections.					
Ⓕ Other options					
Blank	No option	●	●	●	●
S	Surge suppressor (varistor) attached (*1)	●	●	●	●
N	Plug attached (for 3-port valve)	●	●	●	●
NC	3-way valve used plug assembly (C1 (A), E1 (R1) assembly)	●	●	●	●
NO	3-way valve used plug assembly (C2(B), E2(R2) assembly)	●	●	●	●
Ⓖ Station No.					
2	2 stations	●	●	●	●
to	to				
10	10 stations				
Ⓗ Exhaust installation method					
CL	Common exhaust/L-bracket (for 2-position single)	●	●	●	●
CU	Common exhaust/U-bracket	●	●	●	●
IL	Individual exhaust/L-bracket (for 2-position single)	●	●	●	●
IU	Individual exhaust/U-bracket	●	●	●	●
C	Common exhaust			●	●
I	Individual exhaust		●	●	●
Ⓘ Voltage					
AC100V	100 VAC 50/60 Hz	●	●	●	●
AC200V	200 VAC 50/60 Hz	●	●	●	●
DC12V	12 VDC	●	●	●	●
DC24V	24 VDC	●	●	●	●
AC110V	110 VAC 50/60 Hz	●	●	●	●
AC220V	220 VAC 50/60 Hz	●	●	●	●
*** Other custom order products**					
AC24V, AC48V, DC6V		●	●		
DC48V		●	●	●	●
DC100V, DC110V				●	●

Precautions for model No. selection

Separate use of the single solenoid valve units for manifolds as listed below depending on the model.

■ For 4F0 to 4F1

4F1 B 0 - C - D E F ——— I

When using the unit as a repair item, separately also purchase the gasket kit listed below depending on the model.

M4F0-GASKET-KIT
M4F1-GASKET-KIT
M4F1-I-GASKET-KIT

■ For 4F2/4F3

When the exhaust installation method is CL, CU, IL, IU

* Installed on the manifold.

4F3 B 0 - C - D E F ——— I

When using the unit as a repair item, separately also purchase the gasket kit listed below depending on the model.

M4F2-GASKET-KIT
M4F3-GASKET-KIT

When the exhaust installation method is C or I

* Connect the body.

4F3 B 9 - C - D E F - H - I

(However, when item Ⓗ is C: blank, when I: write I)

The gasket kit is attached.

*1: The surge suppressor for attachment is a suppression connector when the grommet lead wire is 24 VDC or less. (Refer to page 1371.)

*2: With the single, (A) is A4F010.

[Example of model No.]

M4F340-08-M2ES-5-C-AC100V

Ⓐ	Model	: M4F3
Ⓑ	Solenoid position	: 3-position A/B/R connection
Ⓒ	Port size	: Rp1/4
Ⓓ	Manual override	: Non-locking
Ⓔ	Electrical connections	: Grommet lead wire
Ⓕ	Other options	: Surge suppressor attached
Ⓖ	Station No.	: 5 stations
Ⓗ	Exhaust installation method	: Common exhaust
Ⓘ	Voltage	: 100 VAC

[Electrical connection list]

Ⓔ Electrical connections		Ⓐ Model No. (A)4F0	4F1	4F2	4F3
Compact terminal box					
B	Without lead wire	●			
Blank	Without lead wire		●		
L	Without lead wire, with lamp (*3)	●	●		
DIN terminal box					
Blank	DIN terminal box (Pg11)			●	●
L	DIN terminal box (Pg11)/with lamp (*3)			●	●
F	DIN terminal box (G1/2)			●	●
C-connector (lead wire lateral direction)					
C	Lead wire length (300 mm)	●	●		
C00	Lead wire length (500 mm)	●	●		
C01	Lead wire length (1000 mm)	●	●		
C02	Lead wire length (2000 mm)	●	●		
C03	Lead wire length (3000 mm)	●	●		
C1	Without lead wire	●	●		
C2	Lead wire length (300 mm) with surge suppressor and indicator lamp	●	●		
C20	Lead wire length (500 mm) with surge suppressor and indicator lamp	●	●		
C21	Lead wire length (1000 mm) with surge suppressor and indicator lamp	●	●		
C22	Lead wire length (2000 mm) with surge suppressor and indicator lamp	●	●		
C23	Lead wire length (3000 mm) with surge suppressor and indicator lamp	●	●		
C3	Without lead wire with surge suppressor and indicator lamp	●	●		
D-connector (lead wire upward direction)					
D	Lead wire length (300 mm)	●	●		
D00	Lead wire length (500 mm)	●	●		
D01	Lead wire length (1000 mm)	●	●		
D02	Lead wire length (2000 mm)	●	●		
D03	Lead wire length (3000 mm)	●	●		
D1	Without lead wire	●	●		
D2	Lead wire length (300 mm) with surge suppressor and indicator lamp	●	●		
D20	Lead wire length (500 mm) with surge suppressor and indicator lamp	●	●		
D21	Lead wire length (1000 mm) with surge suppressor and indicator lamp	●	●		
D22	Lead wire length (2000 mm) with surge suppressor and indicator lamp	●	●		
D23	Lead wire length (3000 mm) with surge suppressor and indicator lamp	●	●		
D3	Without lead wire with surge suppressor and indicator lamp	●	●		
Grommet lead wire					
Blank	Grommet lead wire	●			
E	Grommet lead wire		●	●	●
E1	Conduit lead wire (CTC19)			●	●
E2	Conduit lead wire (G1/2)			●	●

*3: The DC of L has a built-in surge suppressor
(Refer to page 1371 for the circuit diagram with a surge suppressor/lamp.)

How to order masking plate kit (gasket attached)

● M4F0 to 2

M4F0 - MP-KIT

Ⓐ Model No.

Ⓐ Model No.
M4F0
M4F1
M4F1-06-I(*1)
M4F1-08-I(*1)
M4F2

*1: With M4F1-I (individual exhaust)

● M4F3

M4F3 - 08 - MP-KIT

Model No.

Ⓐ Port size

Ⓐ Port size	
08	Rp1/8
10	Rp3/4

*1: The model No. is the same for NPT and G threads as well.

How to order mix manifold

M 4F3 8 0 - 08 - M2 L S - 7 - CU - AC100V - S1 S2 S3 S4 S5 MP: **2 2 2 1 0 0**

4F0: up to S2 / 4F1-2: up to S4 / 4F3: up to S5

Mix manifold "8"

* For How to order other items, refer to the previous page.

S1=1, 6 S2=2, 5
S3=3, 4 S4=7

* Create a manifold specifications sheet.

How to fill in form for ordering a mix manifold

(1) List the quantity for each function (solenoid position) at the end of How to order. The functions and codes are as shown below.

S1 S2 S3 S4 S5 MP: - **2 2 2 1 0 0**

List the quantity

Example: 2-position single → S1

Code	Function (solenoid position)
S1	2-position single
S2	2-position double
S3	3-position all ports closed
S4	3-position A/B/R connection
S5	3-position P/A/B connection
MP	Masking plate

(2) List the function (solenoid position) and layout position in the field for remarks.

Switching position code = ○, ○th station (refer to the dimensions (pages 1416 to 1436) for how to count stations.)

Example: S1 = 1 to 6 (1st, 6th stations are 2-position single)

[Example of model No.]

For 7 stations

1	2	3	4	5	6	7	····· Layout position
2-position single	2-position double	3-position all ports closed	3-position all ports closed	2-position double	2-position single	3-position ABR connection	
S1	S2	S3	S3	S2	S1	S4	····· Code

2-position single (S1) : 2 units (1st station, 6th station)
2-position double (S2) : 2 units (2nd station, 5th station)
3-position all ports closed (S3) : 2 units (3rd station, 4th station)
3-position ABR connection (S4) : 1 pc (7th station)

M4F380-08-M2LS-7-CU-AC100V - S1 S2 S3 S4 S5 MP: **2 2 2 1 0 0**

S1=1, 6 S2=2, 5 S3=3, 4 S4=7
* Create a manifold specifications sheet.

MEMO

Dimensions CAD

AM4F010 (2-position single only)

● Common exhaust/with L-bracket: grommet lead wire (CL)

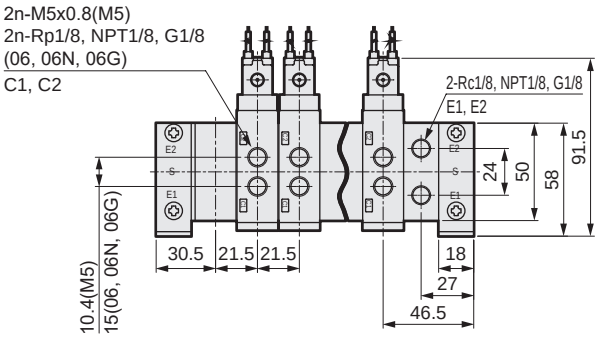

Station No. 1 2 3 .... n

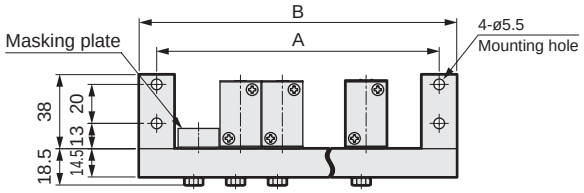

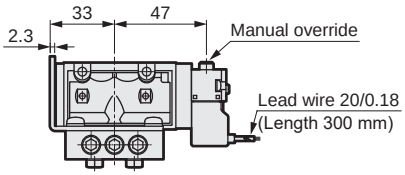

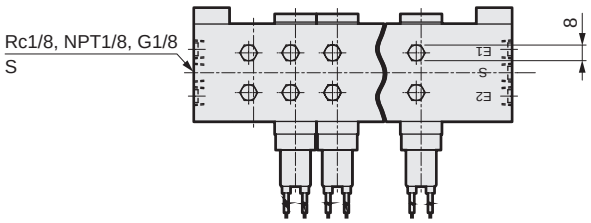

● Individual exhaust/with L-bracket (IL)

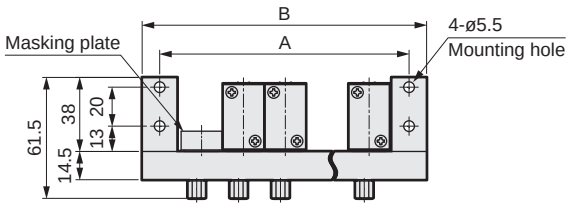

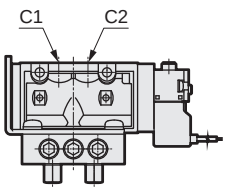

Station No. 1 2 3 .... n

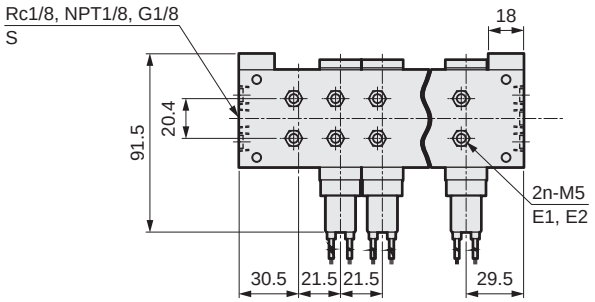

Common exhaust

Stn No.	2	3	4	5	6	7	8	9	10
A	80.5	102	123.5	145	166.5	188	209.5	231	252.5
B	98.5	120	141.5	163	184.5	206	227.5	249	270.5

Individual exhaust

Stn No.	2	3	4	5	6	7	8	9	10
A	63.5	85	106.5	128	149.5	171	192.5	214	235.5
B	81.5	103	124.5	146	167.5	189	210.5	232	253.5

* Refer to page 1446 for details about check valves.

Dimensions

● Compact terminal box: (B)

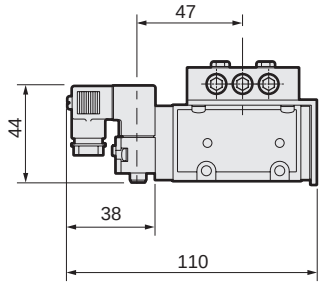

● Compact terminal box with lamp: (L)

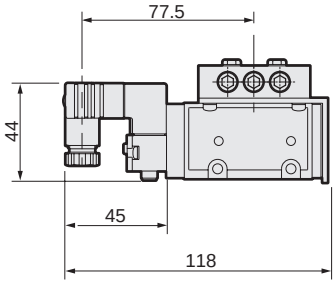

● C-connector: (C/C0*/C1/C2/C2*/C3)

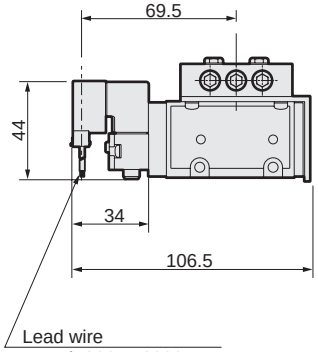

● D-connector: (D/D0*/D1/D2/D2*/D3)

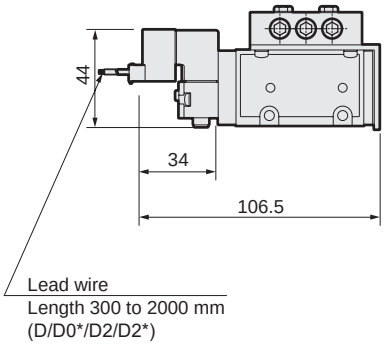

● Position change of manual override: (R)

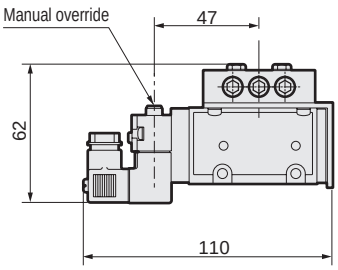

Dimensions CAD

AM4F010/M4F020

● Common exhaust/with U-bracket: grommet lead wire (CU)

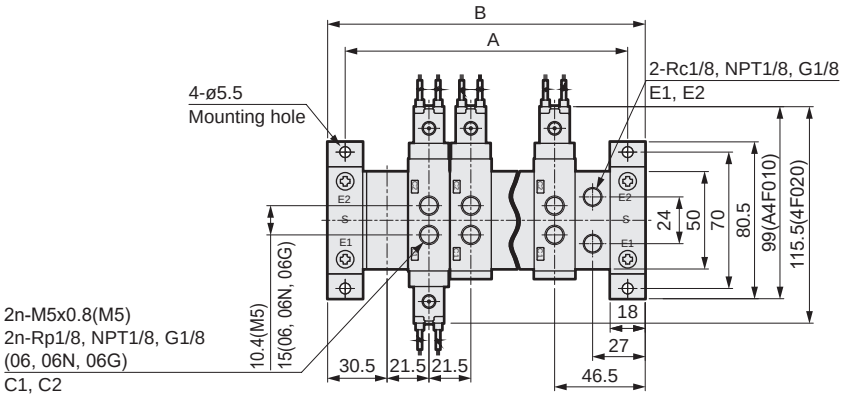

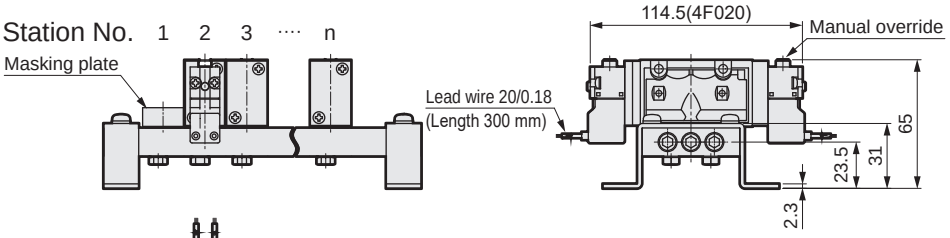

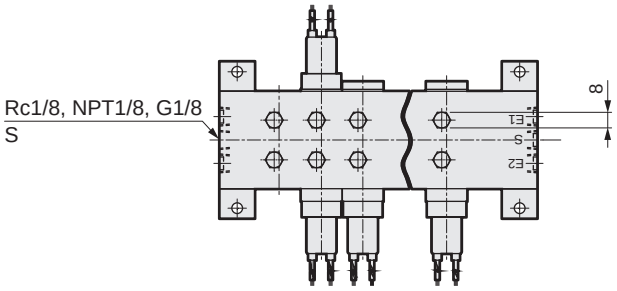

● Individual exhaust/with U-bracket (IU)

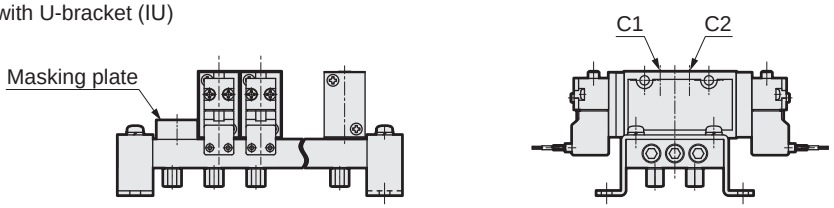

Station No. 1 2 3 .... n

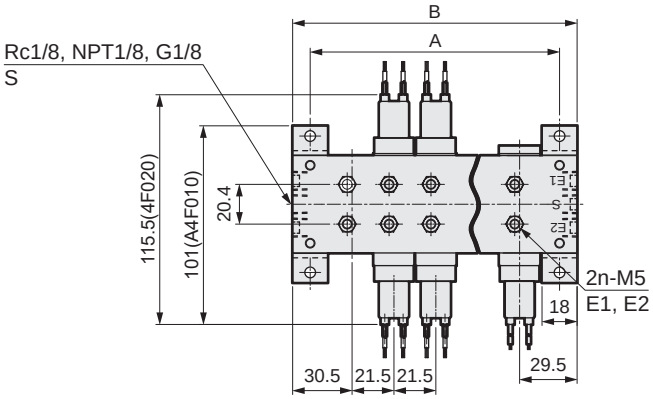

Common exhaust

Stn No.	2	3	4	5	6	7	8	9	10
A	80.5	102	123.5	145	166.5	188	209.5	231	252.5
B	98.5	120	141.5	163	184.5	206	227.5	249	270.5

Individual exhaust

Stn No.	2	3	4	5	6	7	8	9	10
A	63.5	85	106.5	128	149.5	171	192.5	214	235.5
B	81.5	103	124.5	146	167.5	189	210.5	232	253.5

* Refer to page 1446 for details about check valves.

Dimensions

● Compact terminal box: (B)

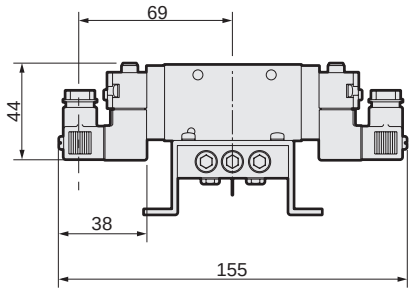

● Compact terminal box with lamp: (L)

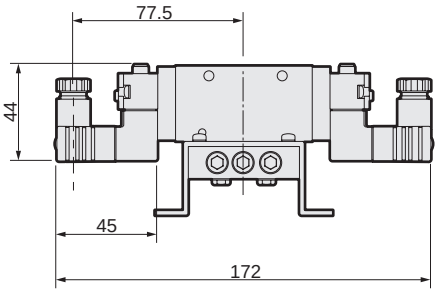

● C-connector: (C/C0*/C1/C2/C2*/C3)

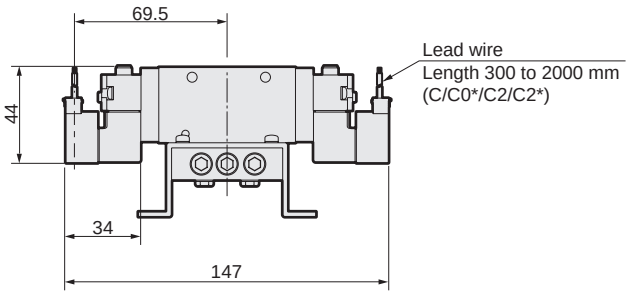

● D-connector: (D/D0*/D1/D2/D2*/D3)

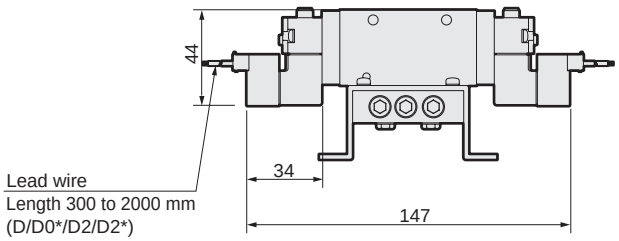

● Position change of manual override: (R)

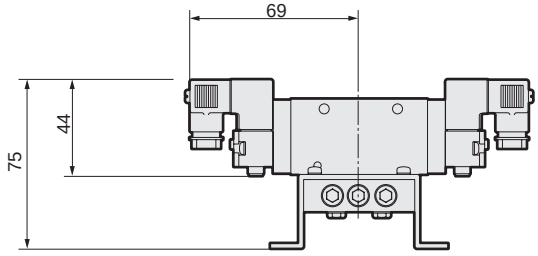

Dimensions CAD

M4F110 (2-position single)

● Common exhaust/with L bracket: compact terminal box (CL)

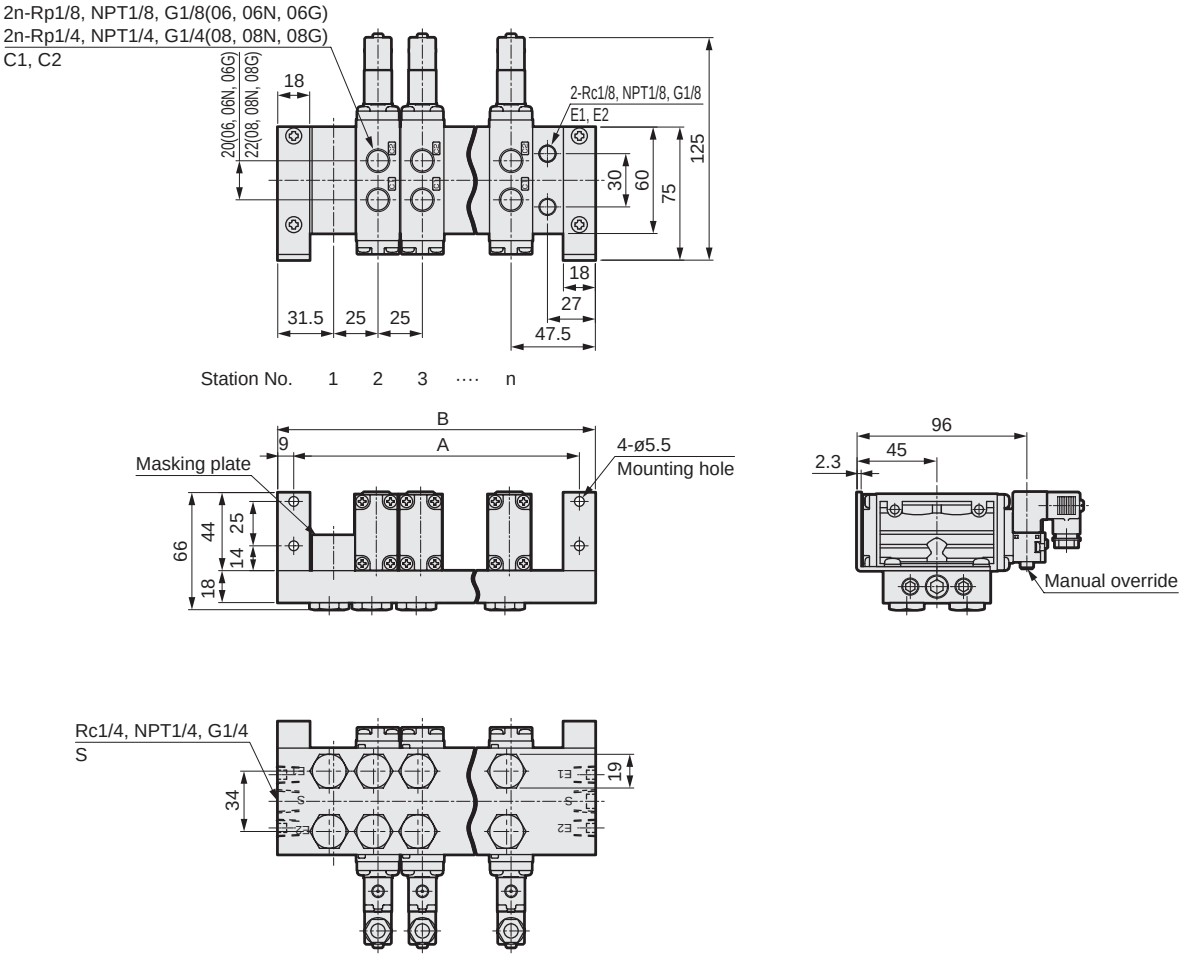

● Individual exhaust/with L bracket (IL)

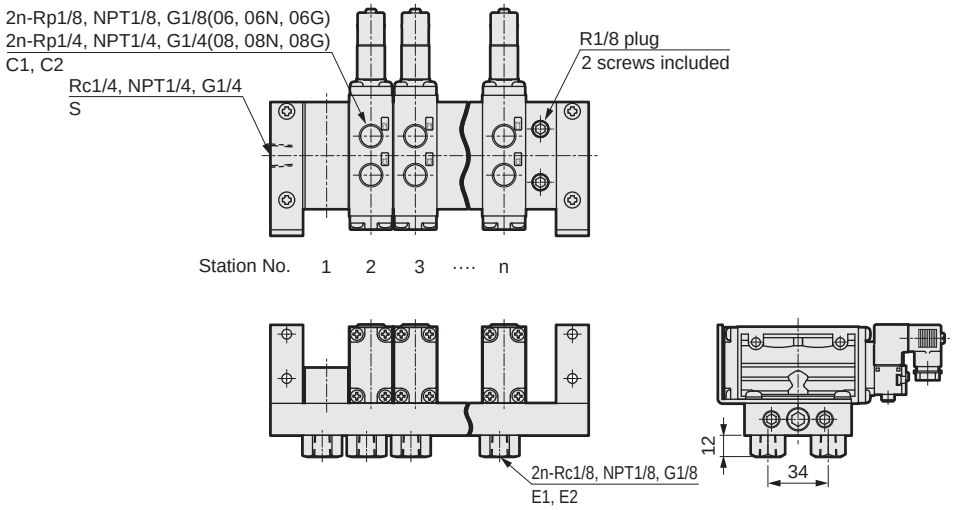

Common exhaust/individual exhaust

Station No.	2	3	4	5	6	7	8	9	10
A	86	111	136	161	186	211	236	261	286
B	104	129	154	179	204	229	254	279	304

* Refer to page 1446 for details about check valves.

Dimensions

● Grommet lead wire: (E)

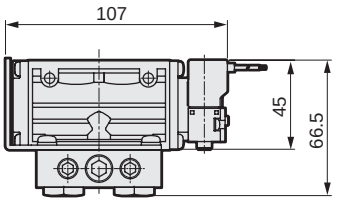

● Compact terminal box with lamp: (L)

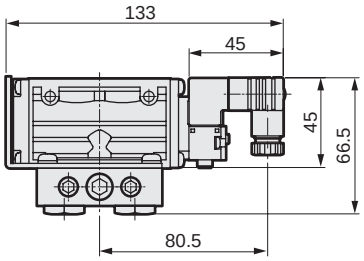

● C-connector: (C/C0*/C1/C2/C2*/C3)

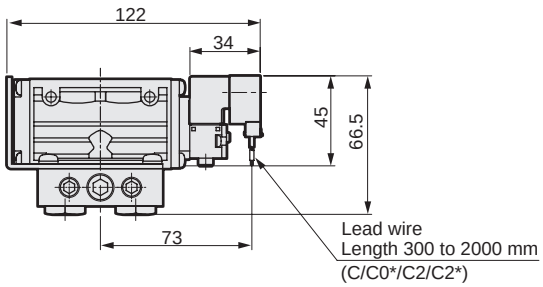

● D-connector: (D/D0*/D1/D2/D2*/D3)

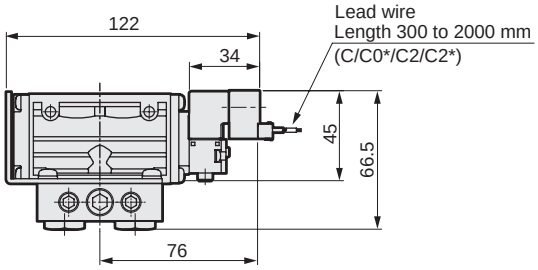

● Position change of manual override: (R)

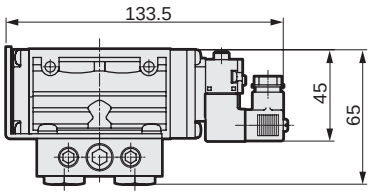

Dimensions CAD

M4F1 $^{1}_{2}_{3}_{4}$ 0

● Common exhaust/with U bracket: compact terminal box (CU)

* The manual override position change (R) is recommended.

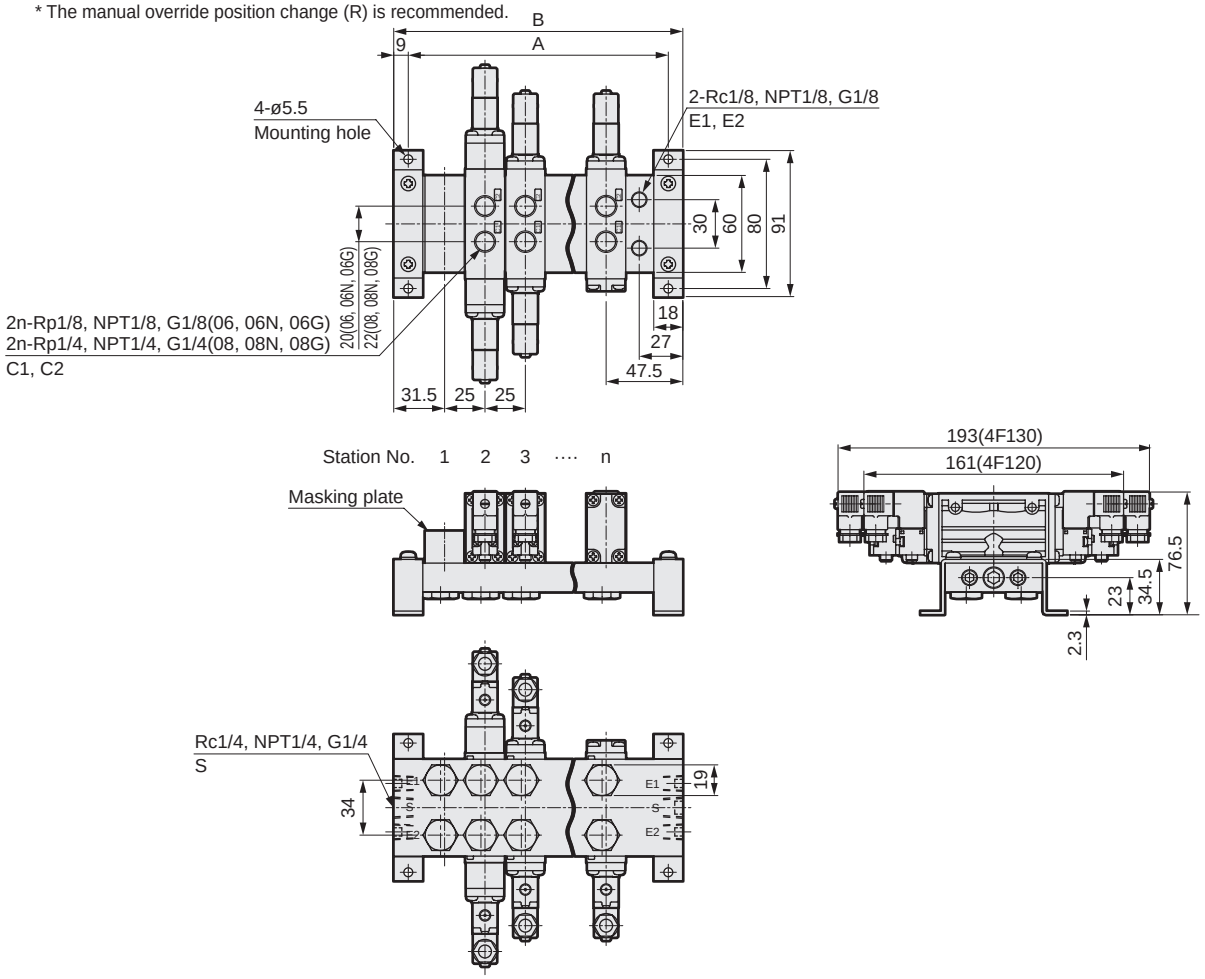

● Individual exhaust/with U bracket (IU)

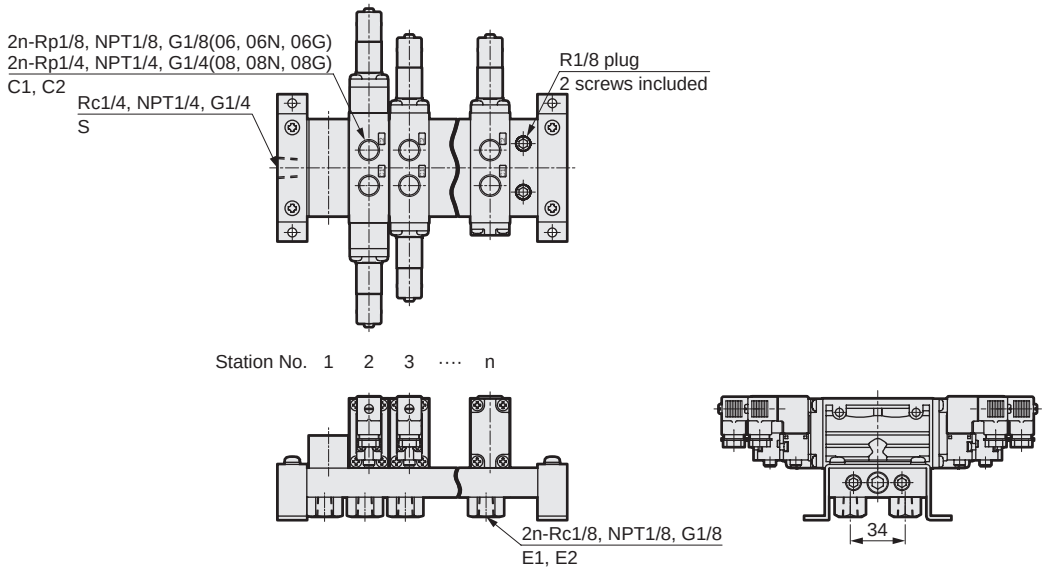

Common exhaust/individual exhaust

Station No.	2	3	4	5	6	7	8	9	10
A	86	111	136	161	186	211	236	261	286
B	104	129	154	179	204	229	254	279	304

* Refer to page 1446 for details about check valves.

Dimensions

● Grommet lead wire: (E)

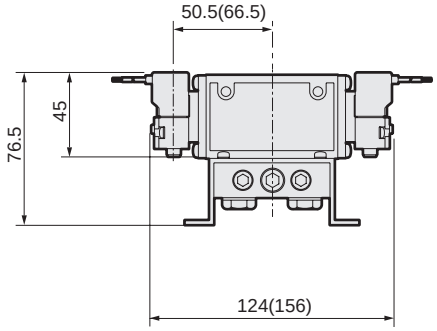

● Compact terminal box with lamp: (L)

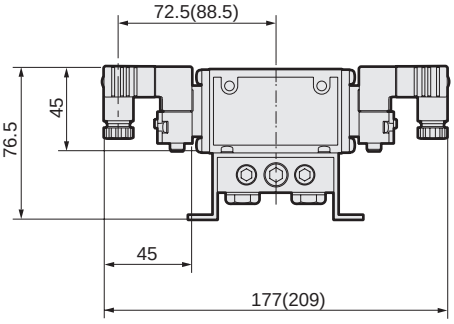

● C-connector: (C/C0*/C1/C2/C2*/C3)

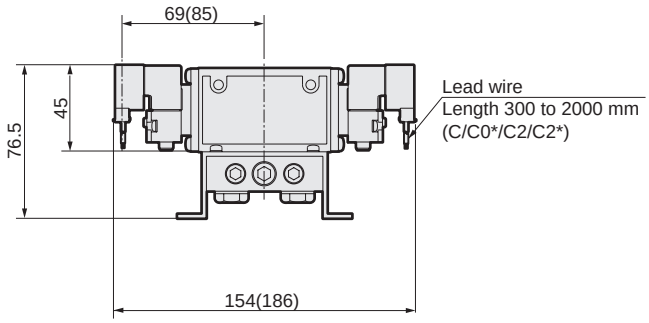

● D-connector: (D/D0*/D1/D2/D2*/D3)

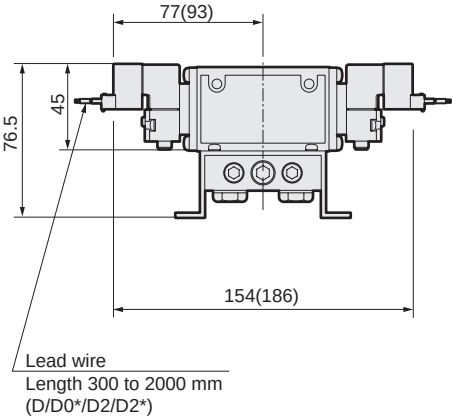

● Position change of manual override: (R)

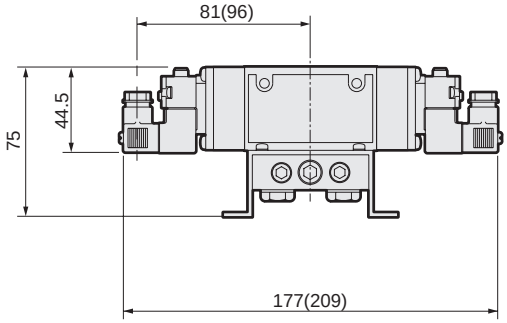

* Values in ( ) are dimensions for 3-position valves.

Dimensions CAD

M4F1 1 2 3 4 0

● Individual exhaust (I)

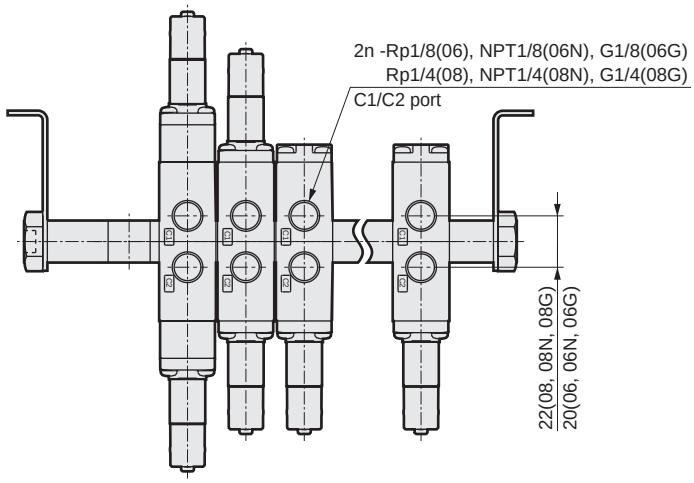

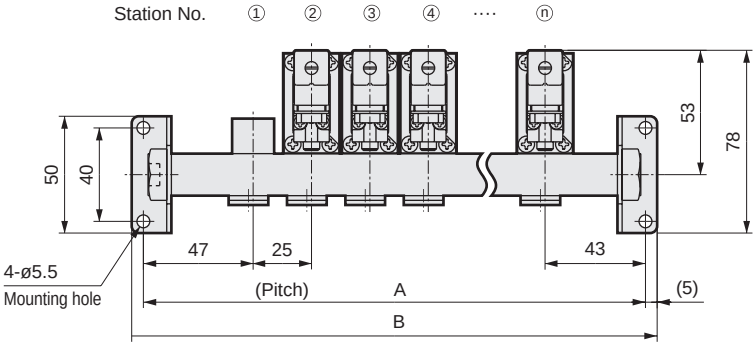

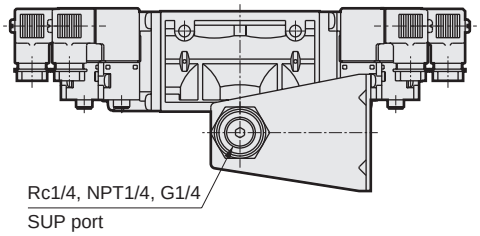

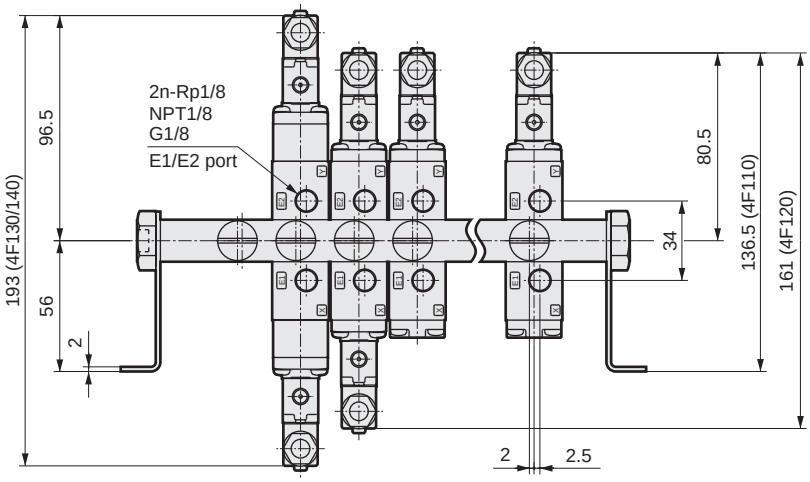

Individual exhaust

Station No.	2	3	4	5	6	7	8	9	10
A	115	140	165	190	215	240	265	290	315
B	125	150	175	200	225	250	275	300	325

* Refer to page 1446 for details about check valves.

Dimensions

● Compact terminal box with lamp: (L)

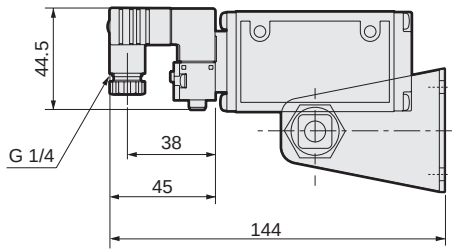

● Grommet lead wire: (E)

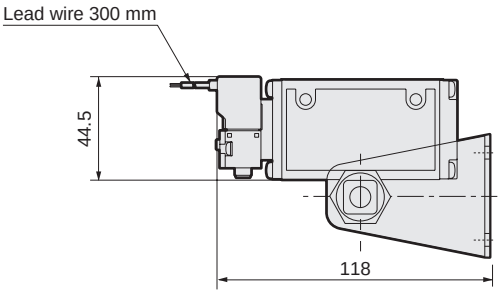

● C-connector: (C/C0*/C1/C2/C2*/C3)

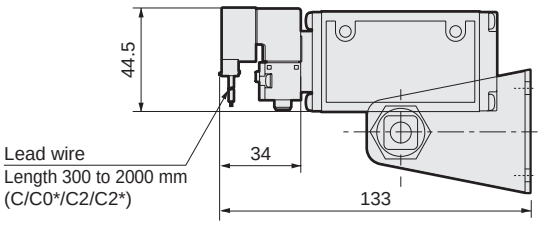

● D-connector: (D/D0*/D1/D2/D2*/D3)

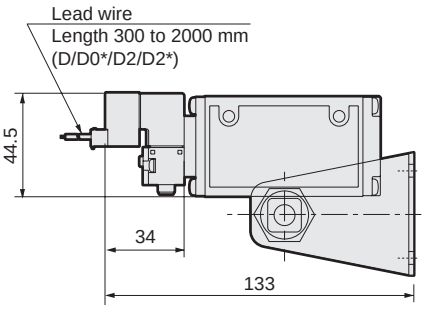

Dimensions CAD

M4F210(2-position single)

● Common exhaust/with L bracket: compact terminal box (CL)

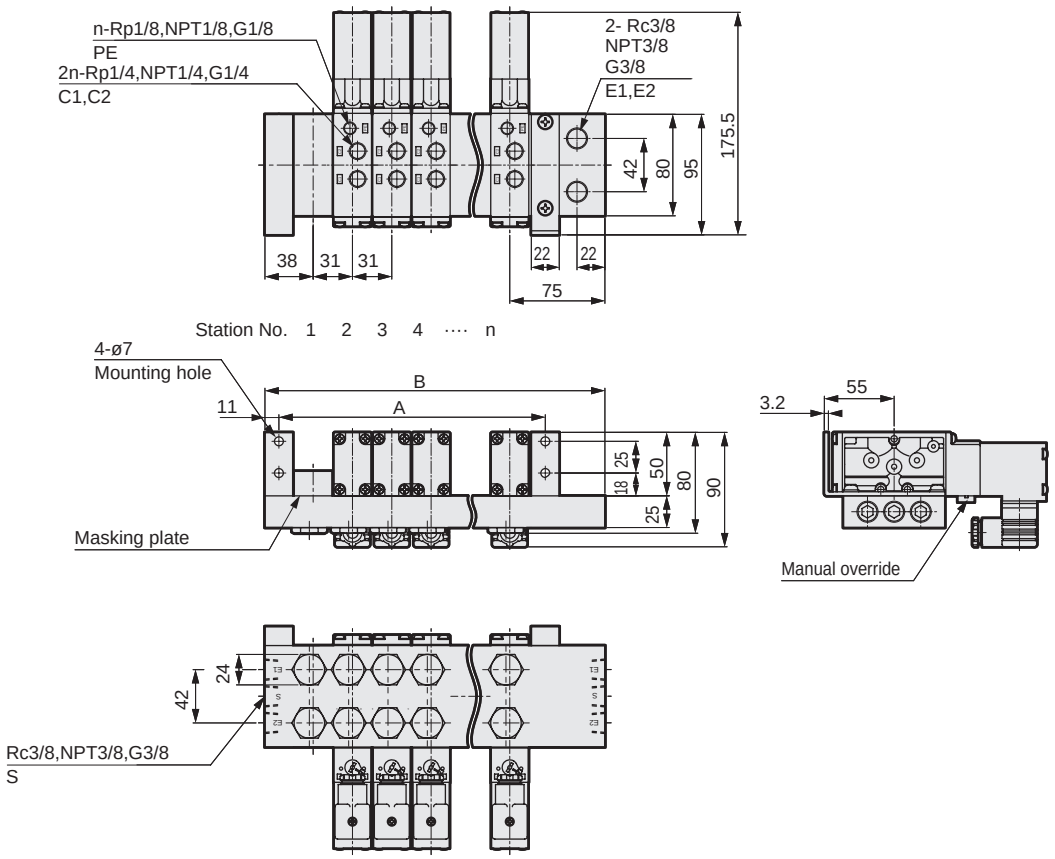

● Individual exhaust/with L bracket (IL)

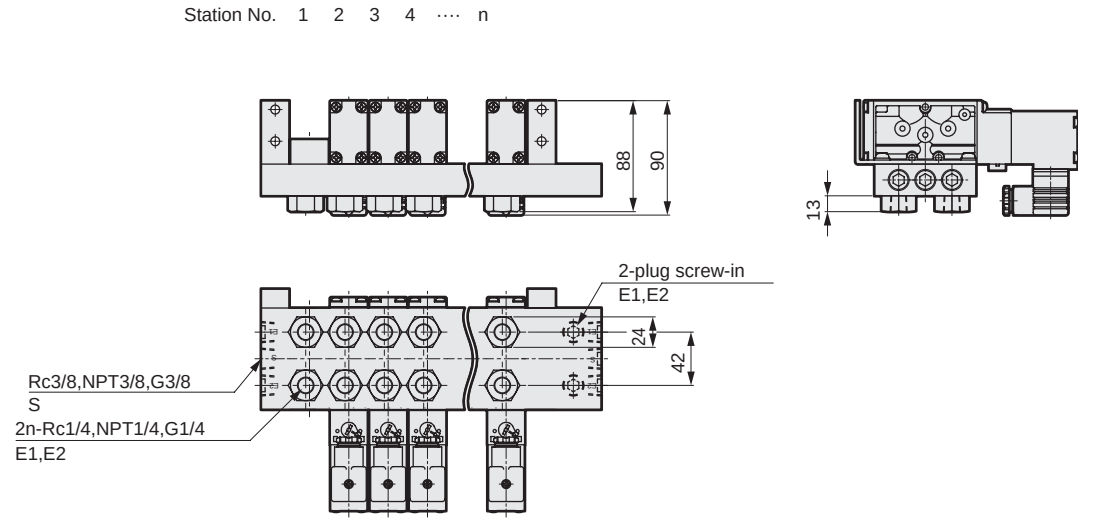

Common exhaust/individual exhaust

Station No.	2	3	4	5	6	7	8	9	10
A	86	117	148	179	210	241	272	303	334
B	144	175	206	237	268	299	330	361	392

* Refer to page 1446 for details about check valves.

Dimensions

● Grommet lead wire: (E)

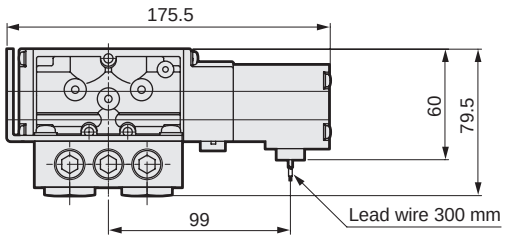

● Conduit lead wire: (E1/E2)

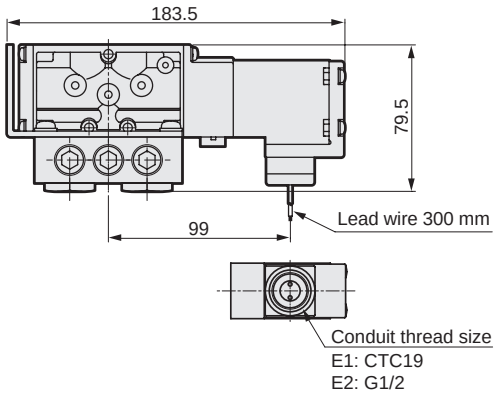

● Position change of manual override: (R)

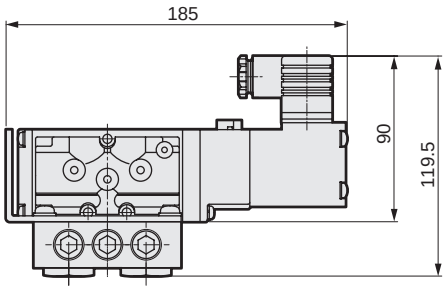

Dimensions CAD

M4F2 1 2 3 4 0

● Common exhaust/with U bracket: compact terminal box (CU)

* The manual override position change (R) is recommended.

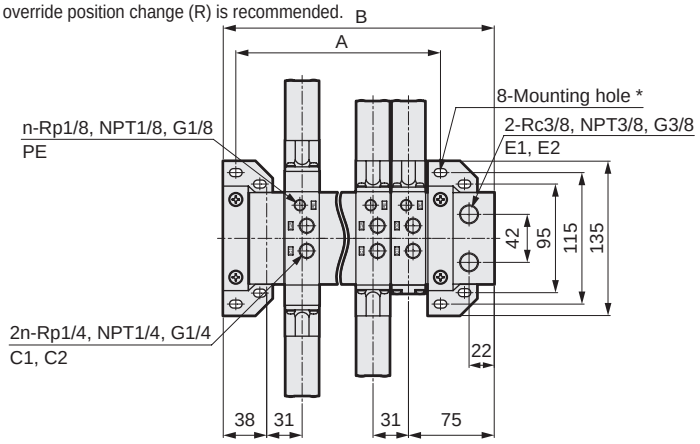

* Installation hole portion enlarged

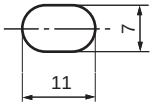

Station No. 1 2 ··· (n-1) n

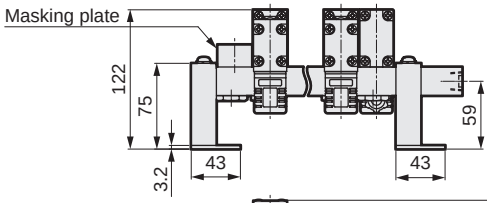

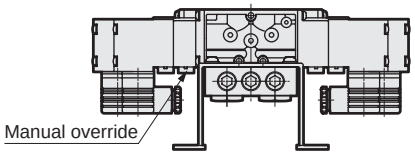

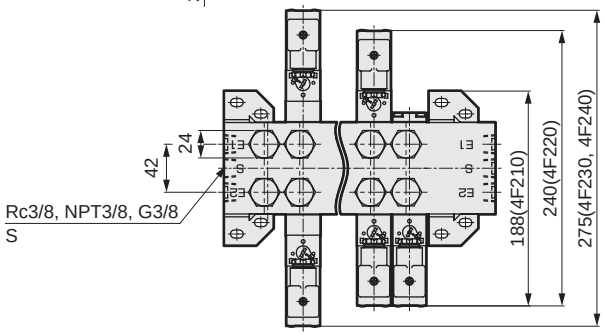

● Individual exhaust/with U bracket (IU)

Station No. 1 2 ··· (n-1) n

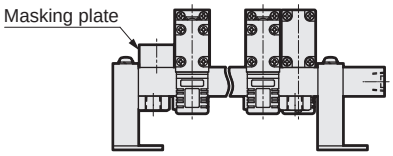

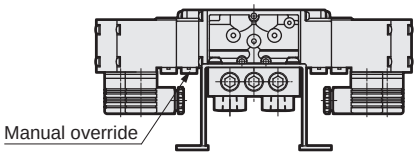

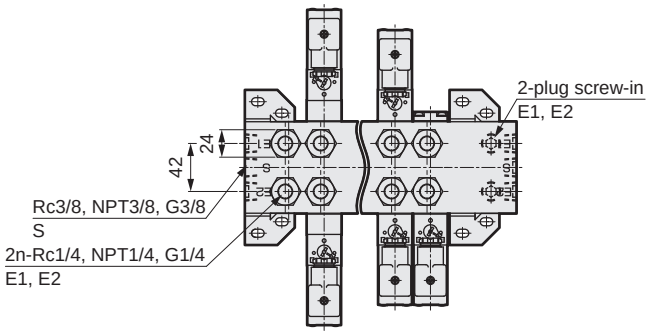

Common exhaust/individual exhaust

Station No.	2	3	4	5	6	7	8	9	10
A	86	117	148	179	210	241	272	303	334
B	144	175	206	237	268	299	330	361	392

* Refer to page 1446 for details about check valves.

Dimensions

● Grommet lead wire: (E)

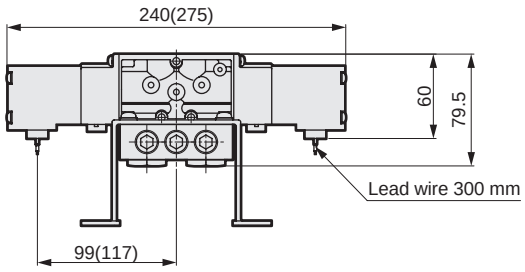

● Conduit lead wire: (E1/E2)

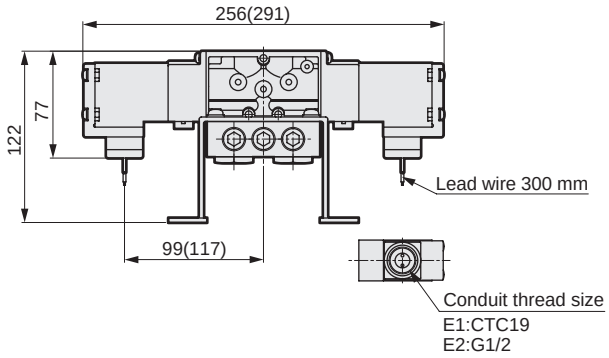

● Position change of manual override: (R)

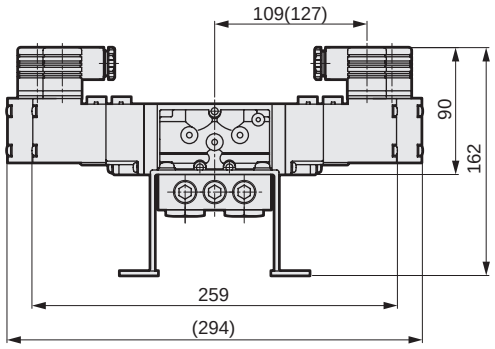

* Values in ( ) are dimensions for 3-position valves.

Dimensions CAD

M4F2 $^{1}_{2}{}^{3}_{4}$ 0

- Individual exhaust (I)
- Common exhaust (C)

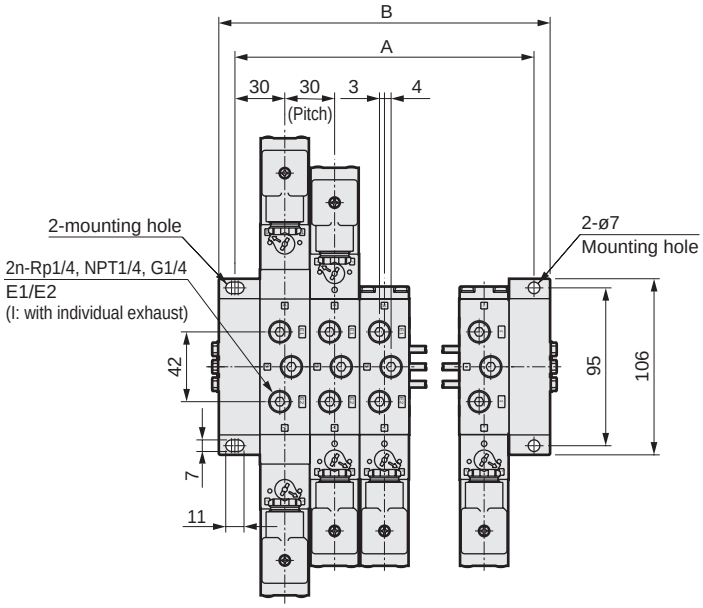

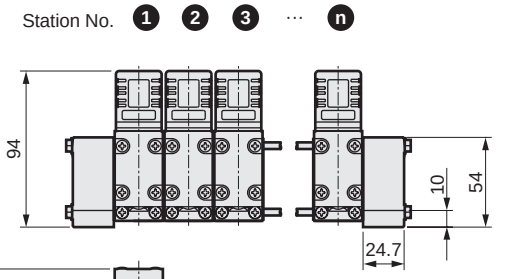

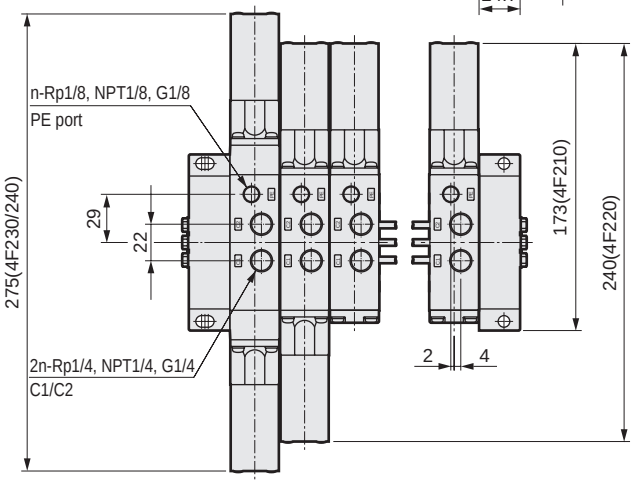

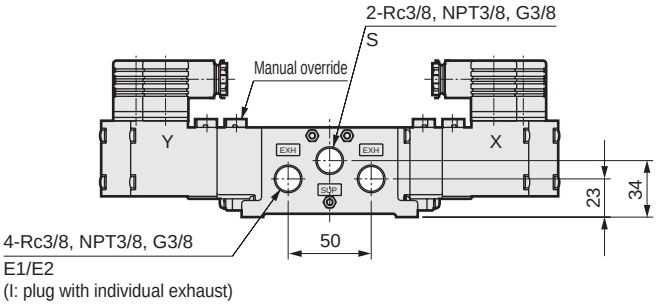

Individual exhaust
Common exhaust

Station No.	2	3	4	5	6	7	8	9	10
A	90	120	150	180	210	240	270	300	330
B	109.4	139.4	169.4	199.4	229.4	259.4	289.4	319.4	349.4

* Refer to page 1446 for details about check valves.

Dimensions

2-position single

● Grommet lead wire: (E)

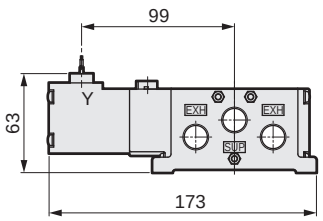

● Conduit lead wire: (E1/E2)

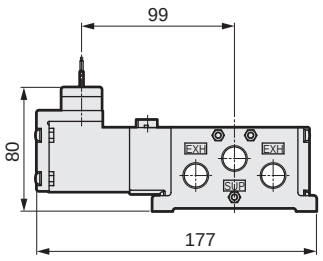

2-position double solenoid, 3 position

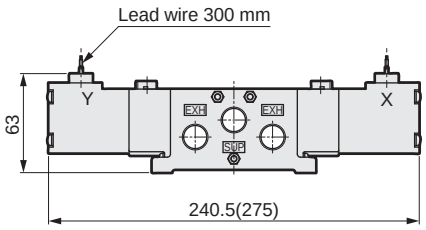

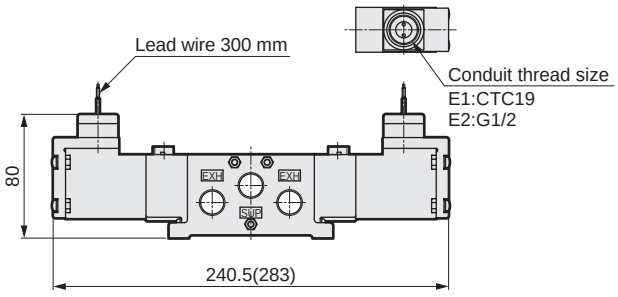

● Position change of manual override: (R)

* Take care upon installation as the DIN terminal box is below the installation surface.

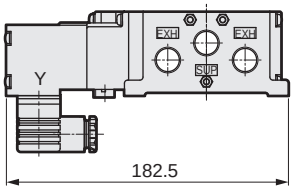

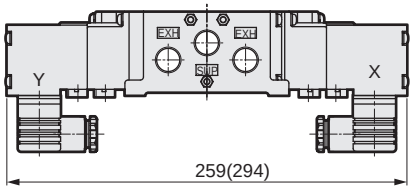

* Values in ( ) are dimensions for 3-position valves.

Dimensions CAD

M4F310 (2-position single)

● Common exhaust/with L bracket: compact terminal box (CL)

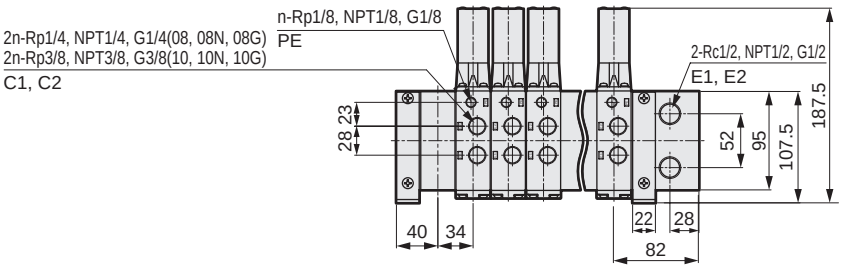

Station No. 1 2 3 ⋯ n

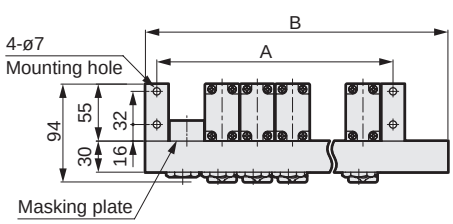

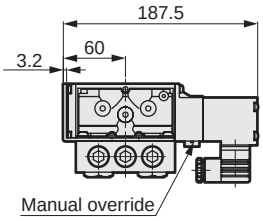

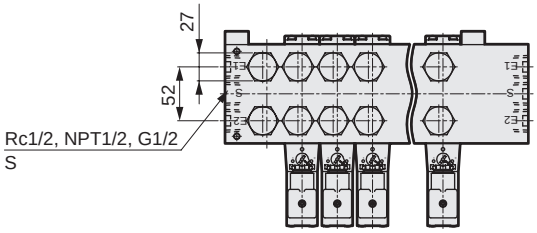

● Individual exhaust/with L bracket (IL)

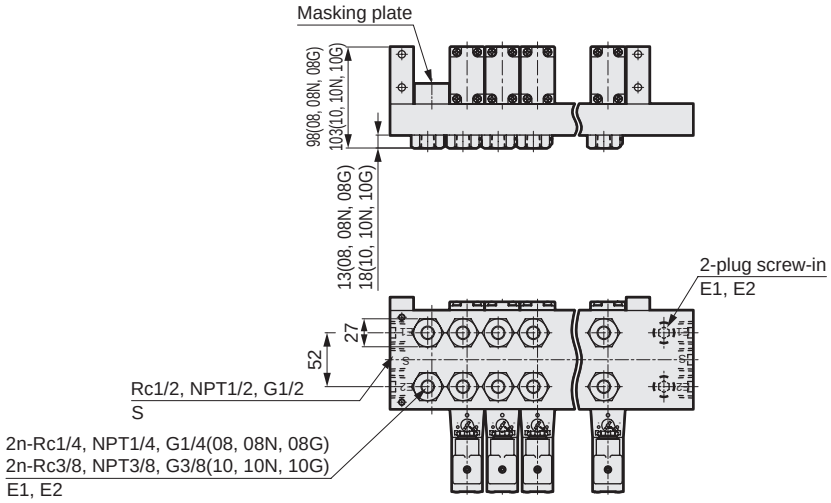

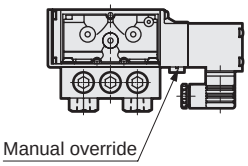

Common exhaust/individual exhaust

Station No.	2	3	4	5	6	7	8	9	10
A	92	126	160	194	228	262	296	330	364
B	156	190	224	258	292	326	360	394	428

* Refer to page 1446 for details about check valves.

Dimensions

● Grommet lead wire: (E)

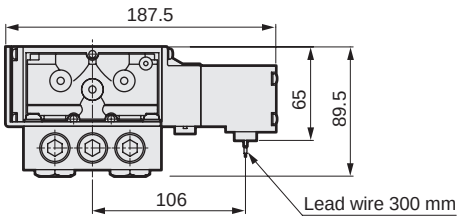

● Conduit lead wire: (E1/E2)

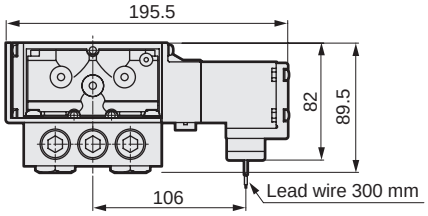

● Position change of manual override: (R)

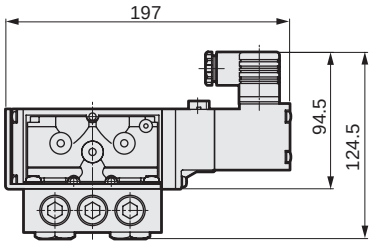

Dimensions CAD

M4F3 1 2 3 4 5 0

● Common exhaust/with U bracket: compact terminal box (CU)

* The manual override position change (R) is recommended.

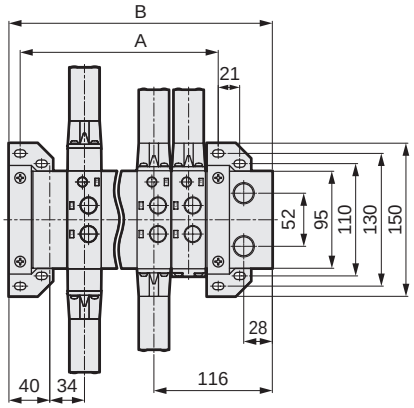

* Installation hole portion enlarged

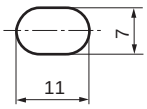

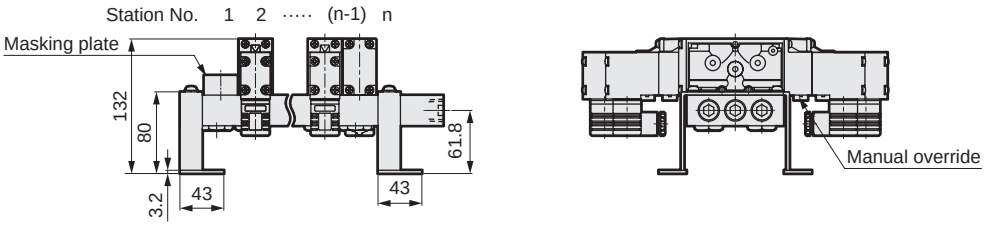

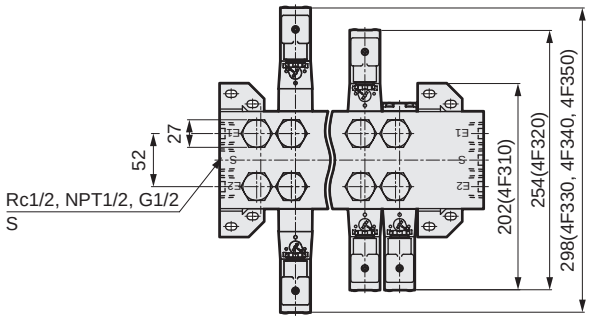

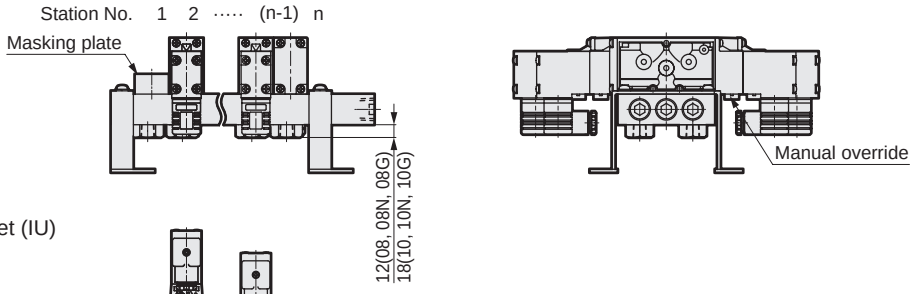

● Individual exhaust/with U bracket (IU)

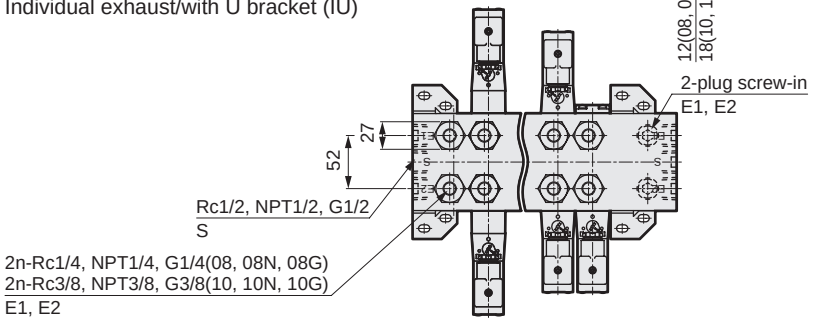

Common exhaust/individual exhaust

Station No.	2	3	4	5	6	7	8	9	10
A	92	126	160	194	228	262	296	330	364
B	156	190	224	258	292	326	360	394	428

* Refer to page 1446 for details about check valves.

Dimensions

● Grommet lead wire: (E)

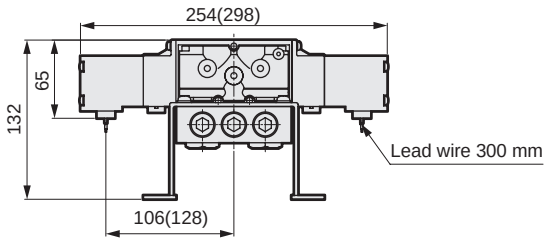

● Conduit lead wire: (E1/E2)

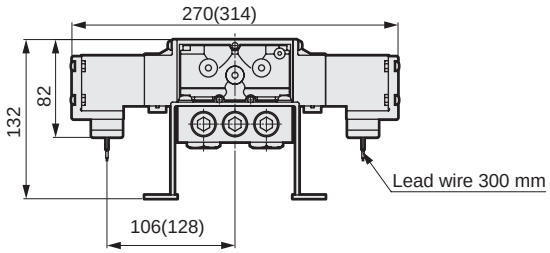

● Position change of manual override: (R)

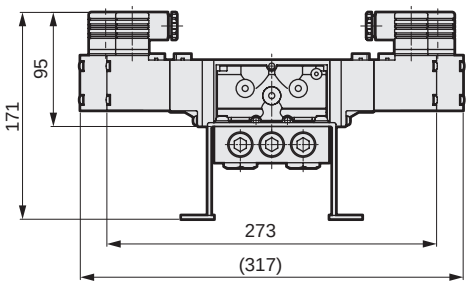

* Values in ( ) are dimensions for 3-position valves.

Dimensions CAD

M4F3 1 2 3 4 5 0

- Individual exhaust (I)
- Common exhaust (C)

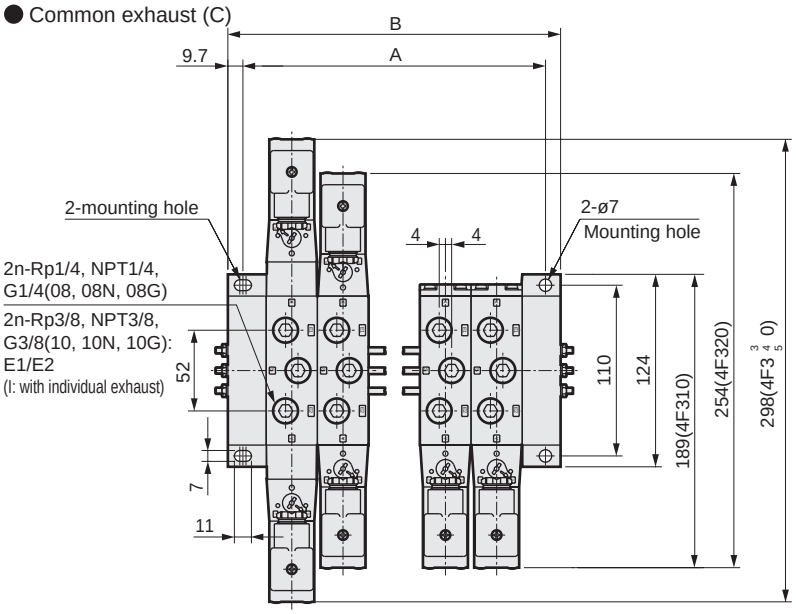

Station No. ❶ ❷ .... ⓝ

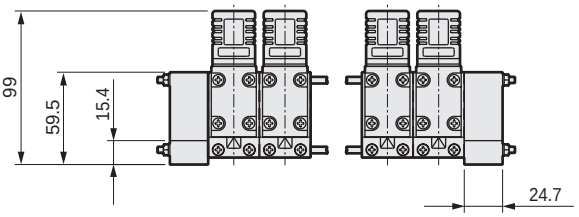

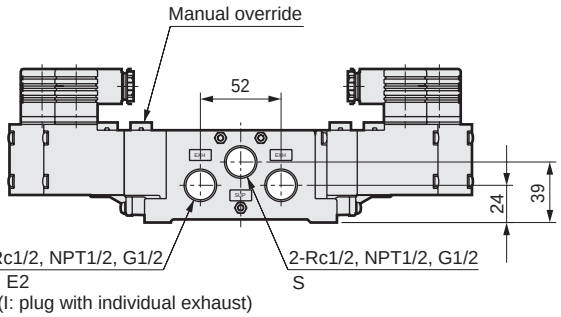

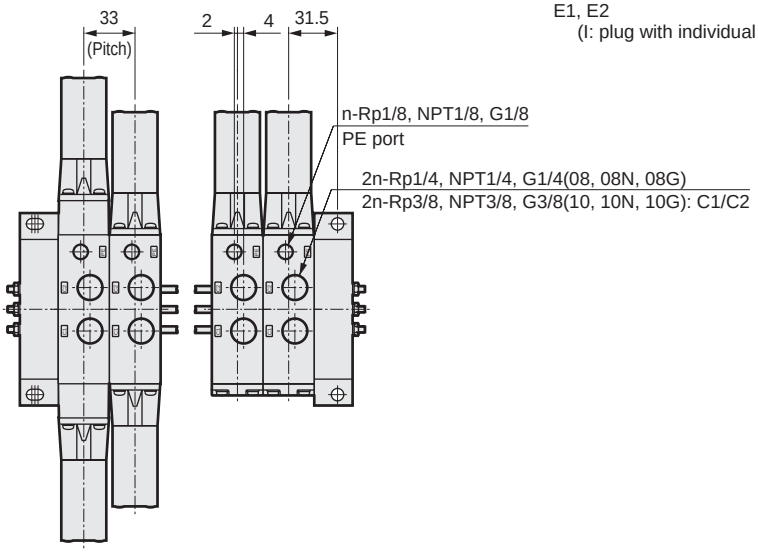

Individual exhaust
Common exhaust

Station No.	2	3	4	5	6	7	8	9	10
A	96	129	162	195	228	261	294	327	360
B	115.4	148.4	181.4	214.4	247.4	280.4	313.4	346.4	379.4

* Refer to page 1446 for details about check valves.

Dimensions

2-position single

● Grommet lead wire: (E)

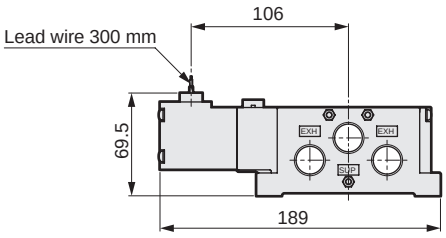

● Conduit lead wire: (E1/E2)

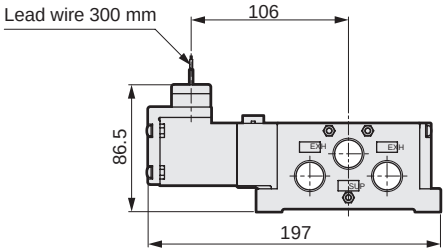

2-position double solenoid, 3-position

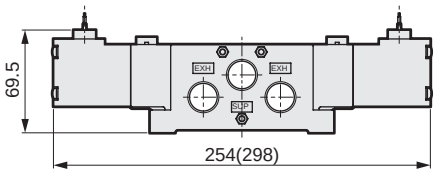

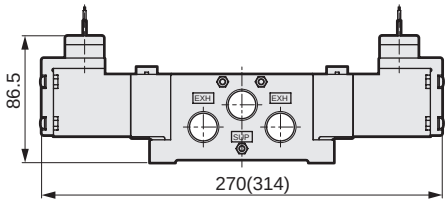

● Position change of manual override: (R)

* Take care upon installation as the DIN terminal box is below the installation surface.

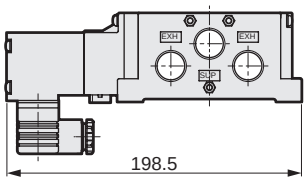

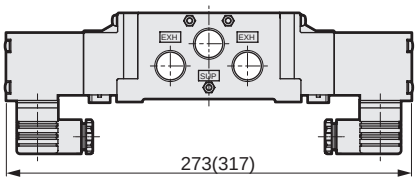

* Values in ( ) are dimensions for 3-position valves.

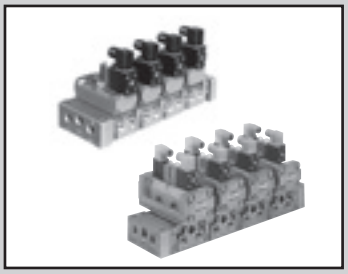

Individual wiring manifold/sub-plate piping
Pilot operated 5-port pneumatic valve

M4F4/5/6/7 Series

● Cylinder bore size: ø63 to ø250

Refer to the Ending for details.

JIS symbol

● 5-port valve

2-position single

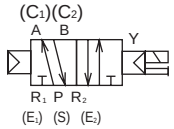

2-position double

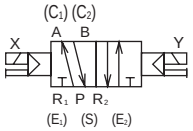

3-position all ports closed

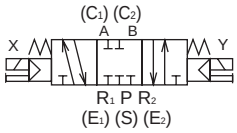

3-position A/B/R connection

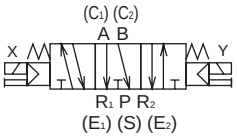

3-position P/A/B connection

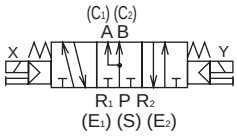

● External pilot

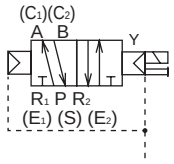

(Code indicates 2-position single)

Common specifications

Item	Description
Manifold method	Manifold integrated
Manifold	Common supply/common exhaust
Station No.	2 to 10 stations
Valve and operation	Pilot operated soft spool valve
Working fluid	Compressed air
Max. working pressure MPa	1.0 (≈150 psi, 10 bar)
Min. working pressure MPa (*2)	Refer to Individual specifications listed below
Proof pressure MPa	1.5 (≈220 psi, 15 bar)
Ambient temperature °C (*1)	-10 (14°F) to 60 (140°F) (no freezing)
Fluid temperature °C	5 (41°F) to 60 (140°F)
Lubrication	Not required (use turbine oil ISO VG32 if lubrication is necessary)
Degree of protection	Dust-proof
Vibration resistance m/s^2	50 or less
Shock resistance m/s^2	300 or less
Atmosphere	Cannot be used in corrosive gas environment.

*1: The ambient temperature indicates the temperature for storage and upon installation, which will differ from the fluid temperature during operation.
*2: The working pressure range is 0 to 1.0 MPa when the external pilot (option code: K) is selected. Set the external pilot pressure between 0.15 and 1.0 MPa.

Electrical specifications

Item			4F4 to 7
Rated voltage V	AC		100, 200, 110, 220 (50 / 60 Hz)
	DC		24
Voltage fluctuation range			±10%
Starting current A	AC	100 V	0.170/0.140
		200 V	0.090/0.070
		110 V	0.15/0.13
		220 V	0.08/0.06
	DC	12 V	0.50
		24 V	0.250
Holding current A	AC	100 V	0.100/0.080
		200 V	0.050/0.040
		110 V	0.09/0.07
		220 V	0.05/0.04
	DC	12 V	0.50
		24 V	0.250
Power (W)	AC	100 V	5.0/4.0
		200 V	5.0/4.0
		110 V	5.0/4.0
		220 V	5.0/4.0
	DC	12 V	6.0
		24 V	6.0
Thermal class			B (molded coil)

Reference: Rated voltage 100 VAC 50/60Hz can be used at 110 VAC 60Hz, and 200 VAC 50/60Hz at 220 VAC 60Hz.

Individual specifications

1 MPa = 10 bar

Item			4F4	4F5	4F6	4F7
Min. working pressure MPa	2-position	Single	0.10 (≈15 psi)	0.10 (≈15 psi)	0.15 (≈22 psi, 1.5 bar)	0.15 (≈22 psi, 1.5 bar)
		Double				
	3-position	All ports closed	0.15 (≈22 psi, 1.5 bar)	0.15 (≈22 psi, 1.5 bar)		
		A/B/R connection				
		P/A/B connection				
Port size	P (S) port		Rc3/8, NPT3/8, G3/8	Rc1/2, NPT1/2, G1/2	Rc3/4, NPT3/4, G3/4	Rc1, NPT1, G1
	$R_1(E_1)$,$R_2(E_2)$ port		Rc3/8, NPT3/8, G3/8	Rc1/2, NPT1/2, G1/2	Rc3/4, NPT3/4, G3/4	Rc3/4, NPT3/4, G3/4
	$A(C_1)$, $B(C_2)$ port		Rc1/4, NPT1/4, G1/4	Rc3/8, NPT3/8, G3/8	Rc1/2, NPT1/2, G1/2	Rc3/4, NPT3/4, G3/4

Performance/characteristics by model

Item	4F4	4F5	4F6	4F7
Response time *1 ms	60	70	200	300

*1: The response time is the value at 0.5 MPa working pressure, with no lubrication, and with the power ON. It depends on the pressure and the lubricant quality.

Weight

Model No.			M4F4	M4F5	M4F6	M4F7
Weight calculation formula kg (n: Station No.)	2-position	Single	1.26xn+0.47	1.58xn+0.77	3.25xn+1.79	4.56xn+1.79
		Double	1.54xn+0.47	1.90xn+0.77	3.59xn+1.79	4.88xn+1.79
	3-position		1.70xn+0.47	2.16xn+0.77	3.89xn+1.79	5.90xn+1.79

Flow characteristics

Model No.		Solenoid position	Port size	C[dm³/(s·bar)]	b	S(mm²)
4F4	2-position	Single	Rc1/4 NPT1/4 G1/4	5.0	0.21	-
		Double				
	3-position	All ports closed		4.7	0.24	
		A/B/R connection		5.3	0.29	
		P/A/B connection		5.3	0.29	
4F5	2-position	Single	Rc3/8 NPT3/8 G3/8	10.0	0.32	-
		Double				
	3-position	All ports closed		9.7	0.28	
		A/B/R connection		9.8	0.25	
		P/A/B connection				
4F6	2-position	Single	Rc1/2 NPT1/2 G1/2	18.0	0.31	-
		Double				
	3-position	All ports closed		15.0	0.23	
		A/B/R connection				
		P/A/B connection				
4F7	2-position	Single	Rc3/4 NPT3/4 G3/4	-	-	160
		Double				
	3-position	All ports closed		-	-	
		A/B/R connection				
		P/A/B connection				

*1: Effective cross-sectional area S and sonic conductance C are converted as S ≈ 5.0 x C.

CE marking specifications

** - Voltage - **ST**

• Standard voltage of 24 VDC or less is CE marking-compatible even if the model No. is not indicated with "ST".

Copper and PTFE free specifications

● Copper- and PTFE-based materials are not used in the flow path.

** - Voltage - **P6**

How to order individual wiring manifold/sub-plate piping

*** Fill in the "Manifold specifications sheet" on pages 1450 and 1451**
Valve functions when using a mix manifold
Indicate the quantity display position of each function.
Refer to the following page.

● Single solenoid valve for manifold * Gasket/mounting screw attached

4F4 1 9 - 00 - M2 L ( ) ——— AC100V

● Manifold

M 4F4 1 0 - 08 - M2 L ( ) - 3 - C - AC100V - S_1 S_2 S_3 S_4 S_5 MP

Ⓐ Model No.
Ⓑ Solenoid position
Ⓒ Port size
Ⓓ Manual override
Ⓔ Electrical connections
Ⓕ Other options
Ⓖ Station No.
Ⓗ Exhaust installation method
Ⓘ Voltage

Code	Description	Ⓐ Model No. 4F4	4F5	4F6	4F7
Ⓑ Solenoid position					
1	2 position single	●	●	●	●
2	2-position double	●	●	●	●
3	3-position all ports closed	●	●	●	●
4	3-position A/B/R connection	●	●	●	●
5	3-position P/A/B connection	●	●	●	●
8	Mix manifold (when there are multiple solenoid positions)	●	●	●	●
Ⓒ Port size					
08	Rc 1/4	●			
10	Rc 3/8		●		
D15	Rc 1/2			●	
E20	Rc 3/4				●
08 N	NPT 1/4	●			
10 N	NPT 3/8		●		
D15N	NPT 1/2			●	
E20N	NPT 3/4				●
08G	G 1/4	●			
10G	G 3/8		●		
D15G	G 1/2			●	
E20G	G 3/4				●
Ⓓ Manual override					
Blank	Locking	●	●	●	●
M2	Non-locking	●	●	●	●
M3	Locking with manual lever	●	●	●	●
Ⓔ Electrical connections					
Blank	DIN terminal box (Pg 11)	●	●	●	●
L	DIN terminal box (Pg11) with lamp (*1)	●	●	●	●
F	DIN terminal box (G1/2)	●	●	●	●
E	Grommet lead wire	●	●	●	●
E1	Conduit lead wire (CTC19)	●	●	●	●
E2	Conduit lead wire (G1/2)	●	●	●	●
B1	Round terminal box (G3/4)	Assemble on conduit lead wire (E1)		●	●	●
B	Round terminal box (G1/2)			●	●	●
BL	Round terminal box(G1/2)/With indicator lamp (*4)(*5)			●	●	●
G	Round terminal box gland(A-15a)with			●	●	●
GL	Round terminal box (*4) (*5) Gland(A-15a)With indicator lamp			●	●	●
Ⓕ Other options					
Blank	No option	●	●	●	●
K	External pilot (*2)	●	●	●	●
S	Surge suppressor (varistor) attached (*6)	●	●	●	●
N	Plug included (for 3-port valve)	●	●	●	●
NC	3-way valve used plug assembly (C1(A).E1(R 1)Assembly)	●	●	●	●
NO	3-way valve used plug assembly (C2(B).E2(R 2)Assembly)	●	●	●	●
Ⓖ Station No.					
2	2 stations	●	●	●	●
to	to				
10	10 stations				
Ⓗ Exhaust installation method					
C	Common exhaust	●	●	●	●
Ⓘ Voltage					
AC100V	100 VAC 50/60 Hz	●	●	●	●
AC200V	200 VAC 50/60 Hz	●	●	●	●
DC12V	12 VDC	●	●	●	●
DC24V	24 VDC	●	●	●	●
AC110V	110 VAC 50/60 Hz	●	●	●	●
AC220V	220 VAC 50/60 Hz	●	●	●	●
*** Other made-to-order products**					
DC48V, DC100V, DC110V		●	●	●	●

⚠ Precautions for model No. selection

*1 : The DC of the DIN terminal box with lamp (L) has a built-in surge suppressor. (Refer to page 1371 for a circuit diagram.)
*2 : Contact CKD when using a vacuum with the external pilot (K).
*3 : With the single solenoid valve unit for manifold, gaskets and set screws are attached as standard.
*4 : 12 VDC models are not available for BL and GL.
*5 : The DC type of BL and GL has a built-in surge suppressor.
*6 : The surge suppressor for attachment is a suppression connector when the grommet lead wire is 24 VDC or less. (Refer to page 1371.)

[Example of model No.]

M4F440-08-M2ES-5-C-100 VAC

Ⓐ Model : M4F4
Ⓑ Solenoid position : 3-position A/B/R connection
Ⓒ Port size : Rc1/4
Ⓓ Manual override : Non-locking
Ⓔ Electrical connections : Grommet lead wire
Ⓕ Other options : surge suppressor included
Ⓖ Station No. : 5 stations
Ⓗ Exhaust installation method : common exhaust
Ⓘ Voltage : 100 VAC

How to order masking plate kit

M4F4 - ( ) - MP-KIT

* Gasket/mounting screw attached

Ⓐ Model No. Ⓑ Port size

Ⓐ Model No.
M4F4
M4F5
M4F6
M4F7

Ⓑ Port size	
Code	Model No.
Blank	M4F4
Blank	M4F5
D15	M4F6
E20	M4F7

How to order mix manifold

M 4F4 (8) 0 - 08 - M2 L ( ) - 7 - C - AC100V - S1 S2 S3 S4 S5 MP **2 2 2 1 0 0**

Mix manifold "8"

* For How to order other items, refer to the previous page.

S1=1, 6 S2=2, 5
S3=3, 4 S4=7

* Create a manifold specifications sheet.

How to fill in form for ordering a mix manifold

(1) List the quantity for each function (solenoid position) at the end of How to order. The functions and codes are as shown below.

\- S1 S2 S3 S4 S5 MP **2 2 2 1 0 0**

List the quantity

Example: 2-position single → S1

Code	Function (solenoid position)
S1	2-position single
S2	2-position double
S3	3-position all ports closed
S4	3-position A/B/R connection
S5	3-position P/A/B connection
MP	Masking plate

(2) List the function (solenoid position) and layout position in the field for remarks.

Switching position code = ○, ○th station (refer to the dimensions (pages 1442 to 1445) for how to count stations.)

Example: S1 = 1 to 6 (1st, 6th stations are 2-position single)

[Example of model No.]

For 7 stations

1	2	3	4	5	6	7	····· Layout position
2-position single	2-position double	3-position all ports closed	3-position all ports closed	2-position double	2-position single	3-position ABR connection	
S1	S2	S3	S3	S2	S1	S4	····· Code

2-position single (S1) : 2 units (1st station, 6th station)
2-position double (S2) : 2 units (2nd station, 5th station)
3-position all ports closed (S3) : 2 units (3rd station, 4th station)
3-position ABR connection (S4) : 1 pc (7th station)

M4F480-08-M2L-7-C-AC100V - S1 S2 S3 S4 S5 MP **2 2 2 1 0 0**

S1=1, 6 S2=2, 5 S3=3, 4 S4=7

* Create a manifold specifications sheet.

Dimensions CAD

M4F4 1 2 3 4 5 0

● Common exhaust: DIN terminal box

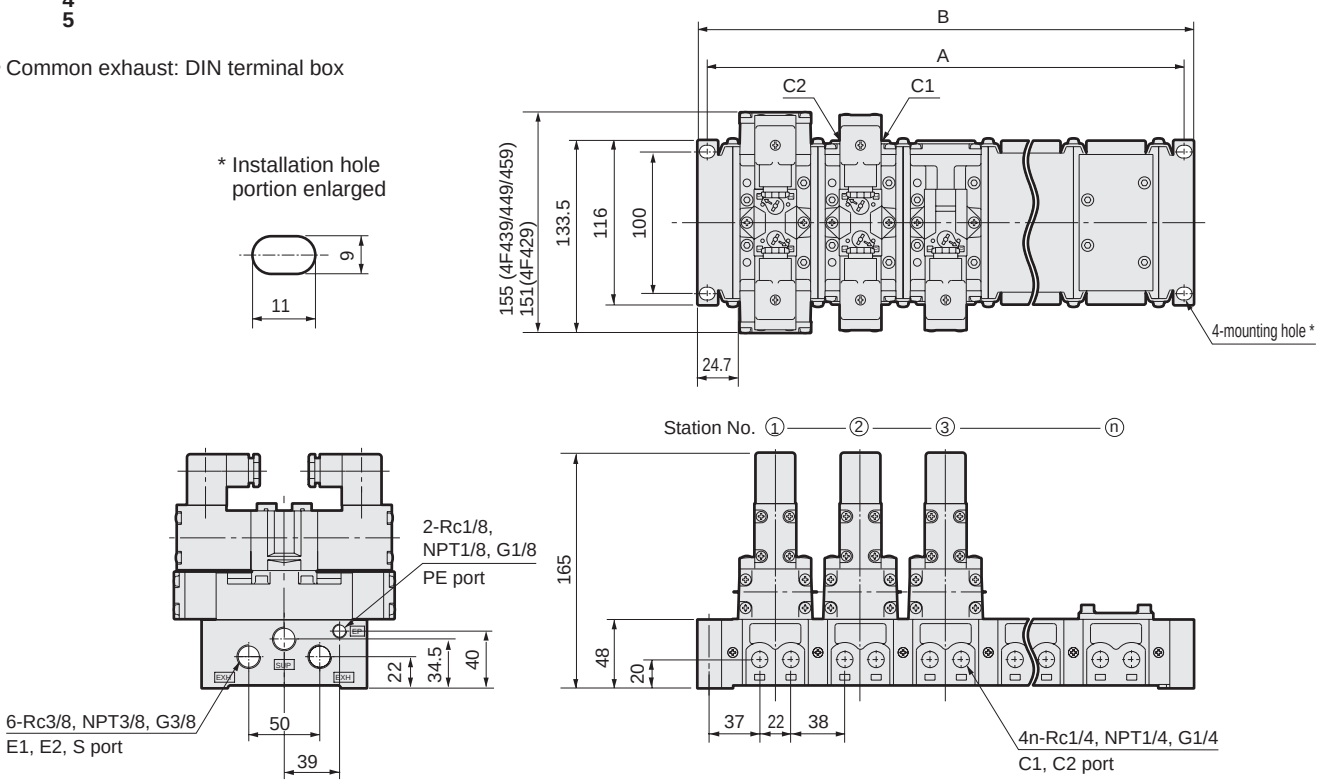

● DIN terminal box with lamp: (L)

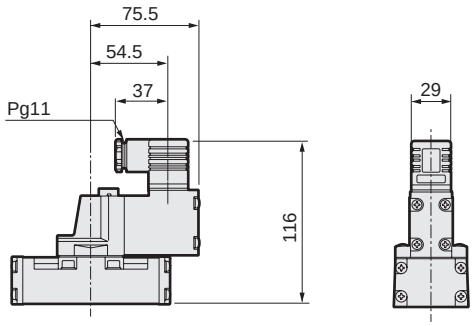

● Conduit lead wire: (E1/E2)

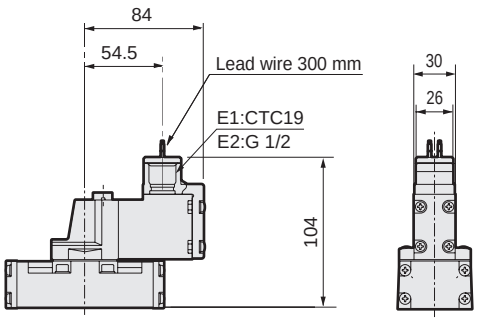

● Grommet lead wire: (E)

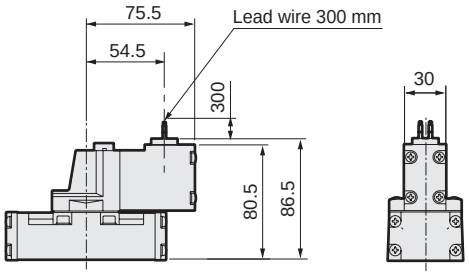

● Round terminal box: (B1/B/BL/GL)

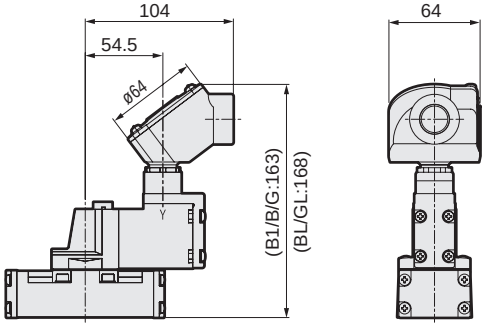

Common exhaust

Station No.	2	3	4	5	6	7	8	9	10
A	156	216	276	336	396	456	516	576	636
B	169.4	229.4	289.4	349.4	409.4	469.4	529.4	589.4	649.4

* Individual supply and individual exhaust are available as a custom order.

* Refer to page 1446 for details about check valves.

Dimensions CAD

M4F5 1 2 3 4 5 0

● Common exhaust: DIN terminal box

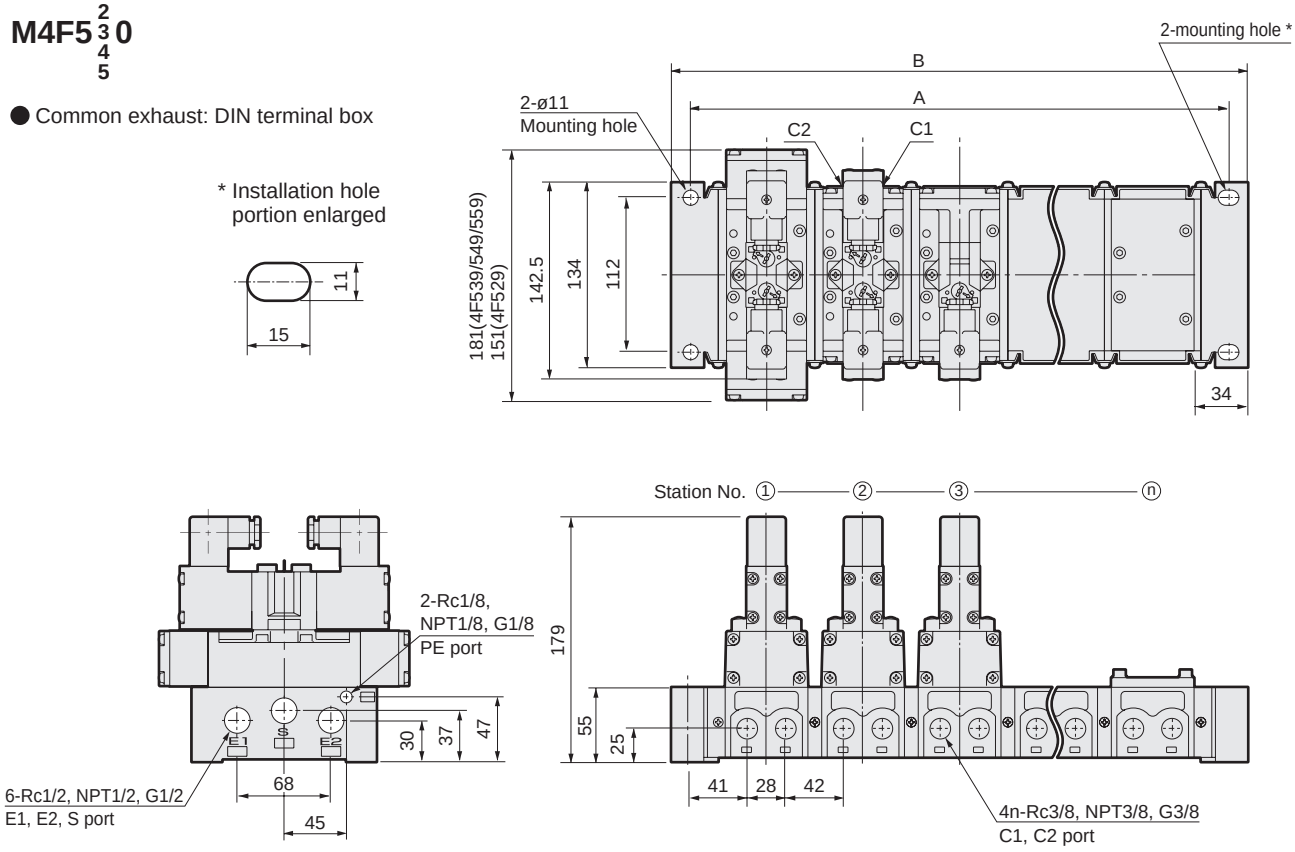

● DIN terminal box with lamp: (L)

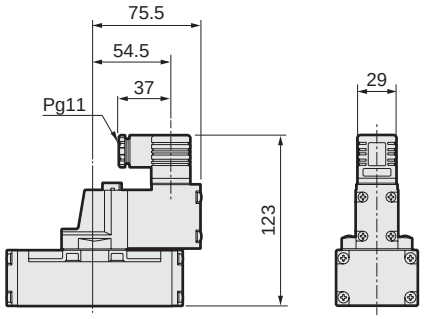

● Conduit lead wire: (E1/E2)

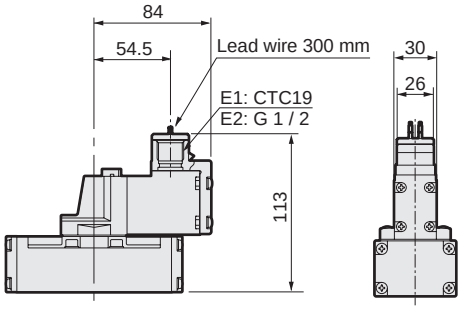

● Grommet lead wire: (E)

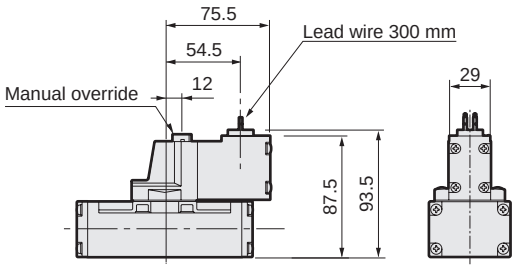

● Round terminal box: (B1/B/BL/G/GL)

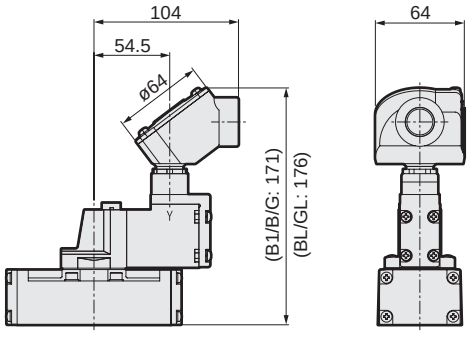

Common exhaust

Station No.	2	3	4	5	6	7	8	9	10
A	180	250	320	390	460	530	600	670	740
B	208	278	348	418	488	558	628	698	768

* Individual supply and individual exhaust are available as a custom order.

* Refer to page 1446 for details about check valves.

Dimensions CAD

M4F6 1 2 3 4 5 0

● Common exhaust: DIN terminal box

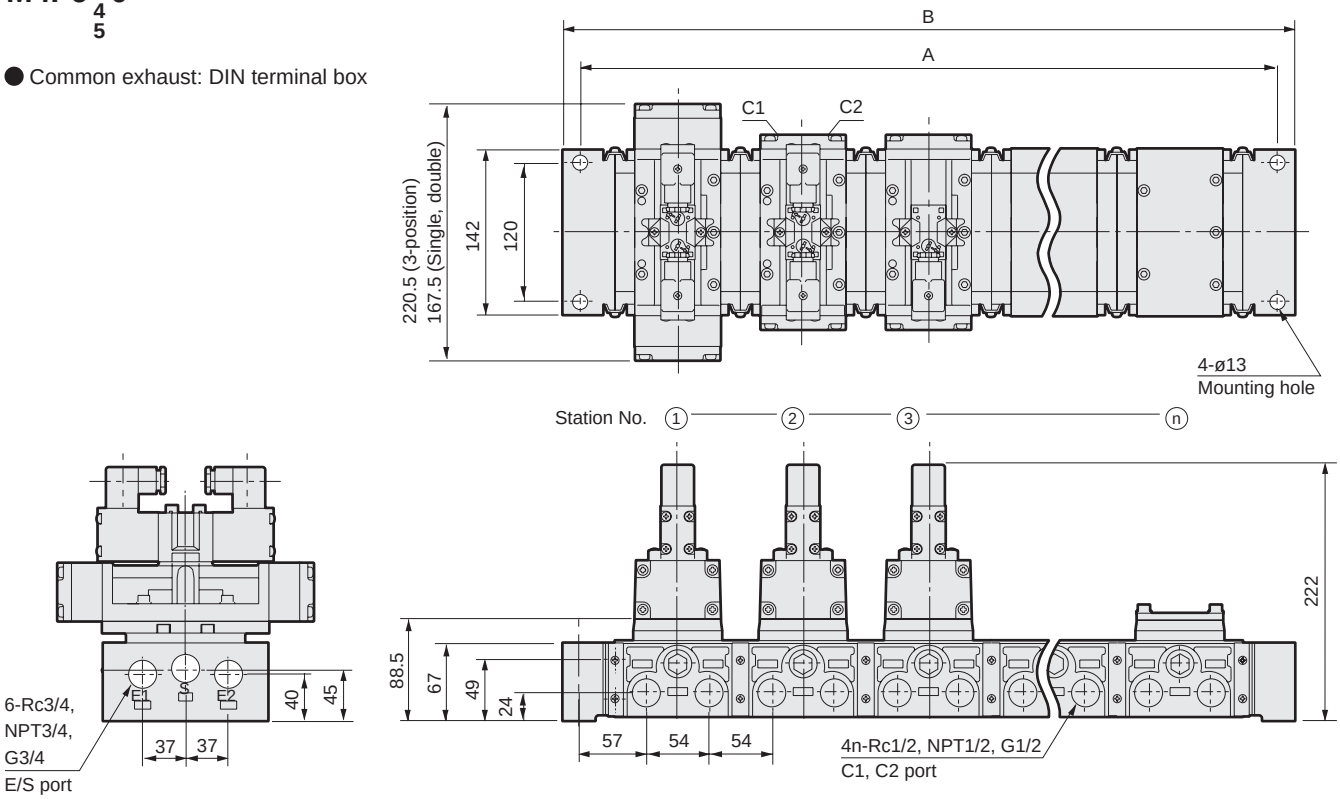

● DIN terminal box with lamp: (L)

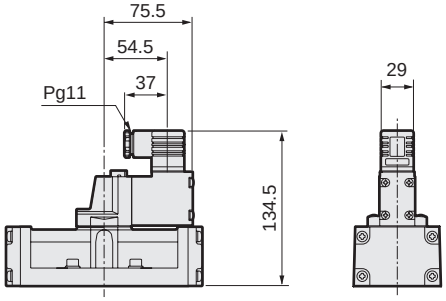

● Conduit lead wire: (E1/E2)

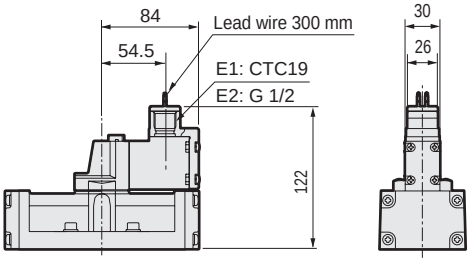

● Grommet lead wire: (E)

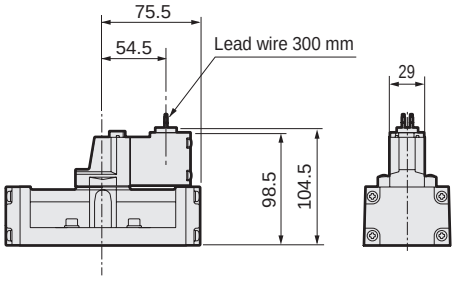

● Round terminal box: (B1/B/BL/G/GL)

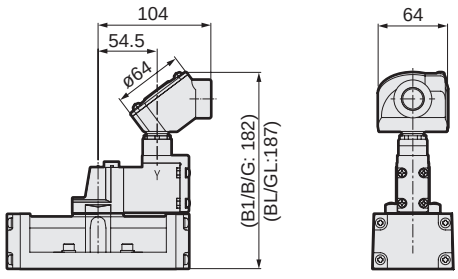

Common exhaust

Station No.	2	3	4	5	6	7	8	9	10
A	276	384	492	600	708	816	924	1032	1140
B	306	414	522	630	738	846	954	1062	1170

* Individual supply and individual exhaust are available as a custom order.

* Refer to page 1446 for details about check valves.

Dimensions CAD

M4F7 1 2 3 4 5 0

● Common exhaust: DIN terminal box

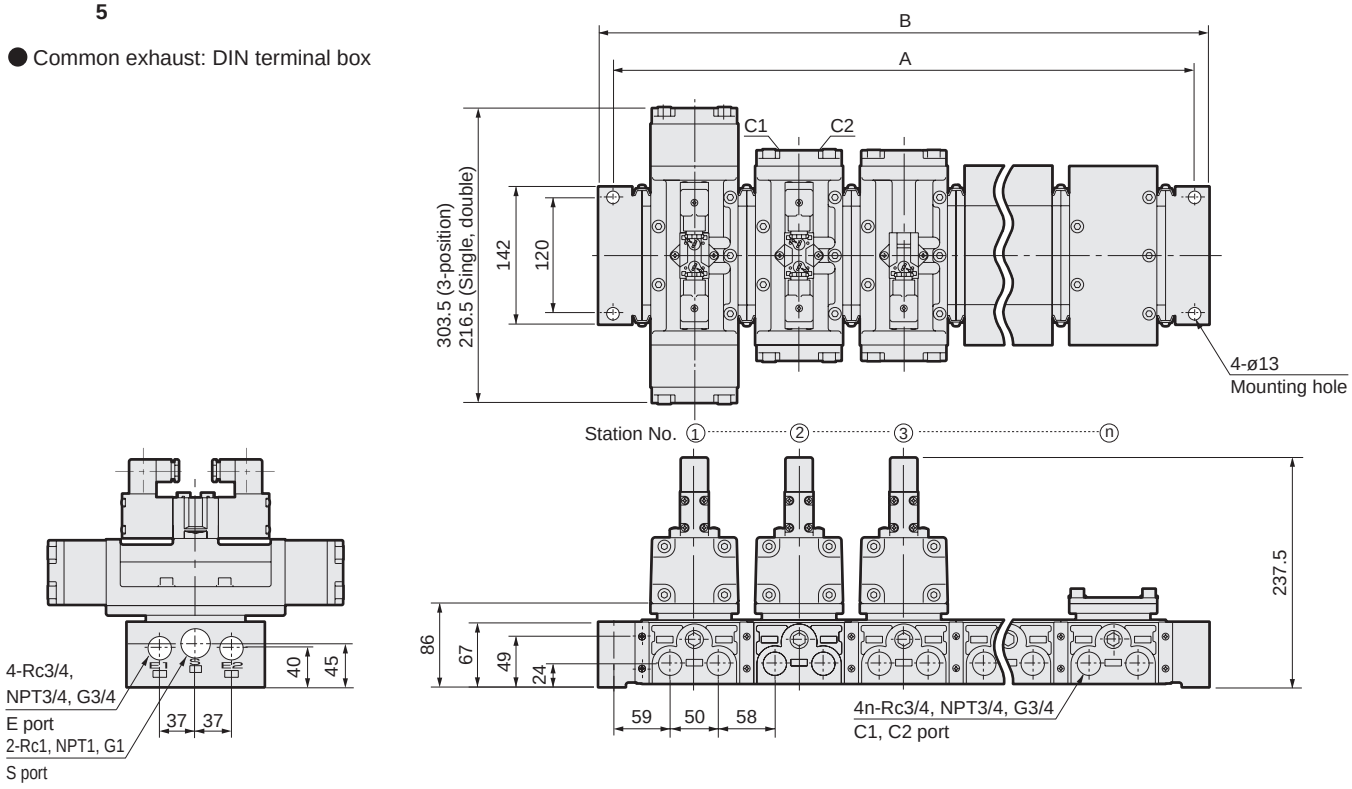

● DIN terminal box with lamp: (L)

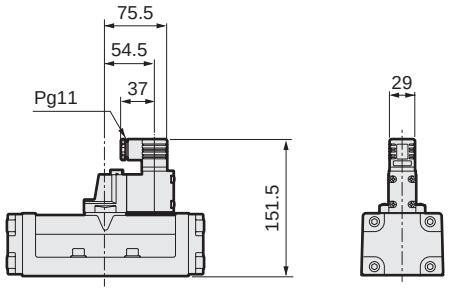

● Conduit lead wire: (E1/E2)

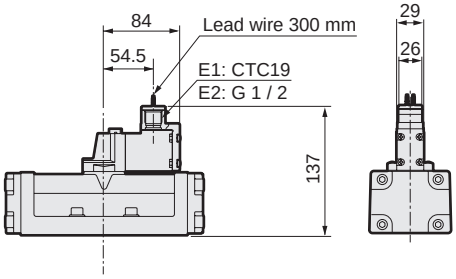

● Grommet lead wire: (E)

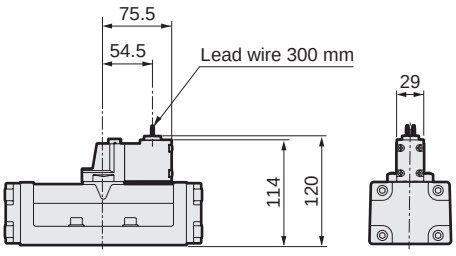

● Round terminal box: (B/B1/BL/G/GL)

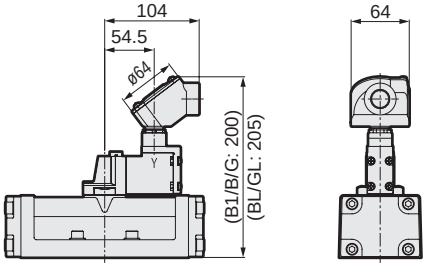

Common exhaust

Station No.	2	3	4	5	6	7	8	9	10
A	276	384	492	600	708	816	924	1032	1140
B	306	414	522	630	738	846	954	1062	1170

* Refer to page 1446 for details about check valves.

3-position check valve (H) dimensions

When the pneumatic source is no longer available when using a 3-position all ports closed solenoid valve, the pneumatic pressure will flow in the reverse direction to the SUP (S) port side. In order to prevent this reverse flow, use a check valve.

● Circuit diagram

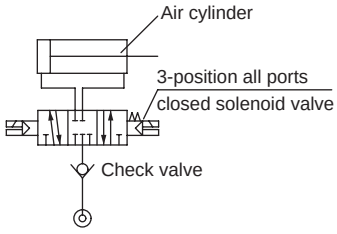

● Dimensions

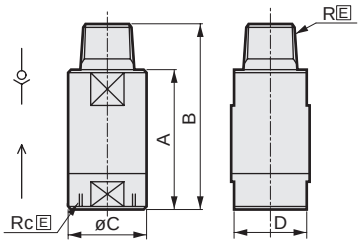

Model No.	A	B	C	D	E	Eff. X-sectional area mm²	Cracking pressure
AC- 8A	49	63	20	17	1/4	20	0.05 MPa
AC-10A	55	70	25	22	3/8	40	
AC-15A	60	80	33	30	1/2	80	
AC-20A	70	92	50	46	3/4	160	
AC-25A	75	100	50	46	1	160	

Round terminal box dimensions (with gland) (Models other than B, BL, G, and GL are available as made to order.)

● Electrical wire through bracket (gland)

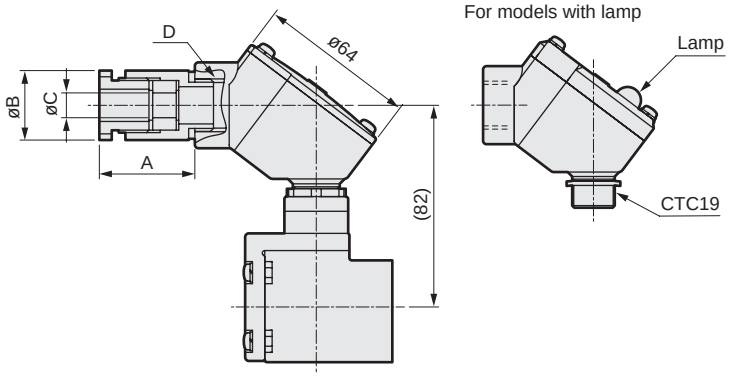

Type	A	B	C	D	Option code
A-15a	39	28	9	G1/2	G
A-15b	39	28	10		G1
A-15c	39	28	11		G2
A-20a	43	34	12	G3/4	G3
A-20b	43	34	13		G4
A-20c	43	34	15		G5

*1: The * dimensions are provided for reference.
*2: Depending on the draw-out cable size, decide on a, b, and c with dimension C as a reference.

Coil option		
B	Round terminal box G1/2	Without indicator lamp
BL		With indicator lamp
B1	Round terminal box G3/4 (Made-to-order product)	Without indicator lamp
B1L		With indicator lamp
G	Round terminal box with gland (Models other than G and GL are available as made to order.) A-15a	Without indicator lamp
GL	A-15a	With indicator lamp
G1	A-15b	Without indicator lamp
G1L	A-15b	With indicator lamp
G2	A-15c	Without indicator lamp
G2L	A-15c	With indicator lamp
G3	A-20a	Without indicator lamp
G3L	A-20a	With indicator lamp
G4	A-20b	Without indicator lamp
G4L	A-20b	With indicator lamp
G5	A-20c	Without indicator lamp
G5L	A-20c	With indicator lamp

Note: The manifolds of 4F2 to 4 are not equipped with a round terminal box, because of interference.

The cabtyre cables recommended by CKD are marked with a circle in the table.

Vinyl cabtyre cable (VCT multiple core JIS C3312)			(Marine cable gland) (JIS F8801) Upper row: model No. (Lower row: Gasket ø)					
Nominal section area	Number of cores	Finish O.D.	15a (ø9)	15b (ø10)	15c (ø11)	20a (ø12)	20b (ø13)	20c (ø15)
0.75 mm²	2	ø8.8	○					
	3	9.2	○					
	4	9.9		○				
1.25	2	9.6		○				
	3	10.5			○			
	4	11.5				○		
2	2	10.5			○			
	3	11			○			
	4	12				○		
3.5	2	12				○	○	
	3	13					○	
	4	14						○

Note: This table shows the relation between marine cable gland and cabtyre cable.

Adaptor (option)

Use an adaptor when combining the actuator of the 4F series with the sub-plate of the FS series. (Contact CKD for details)

Mounting method of 4F4 to 7 single units

● Mounting

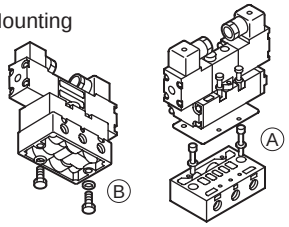

	For B	For A
4F4	M8	M6
4F5	M8	M6
4F6	M10	M8
4F7	M12	M10

DIN terminal (option)

When installing metal pipes or flexible pipes with the DIN terminal box F type (G 1/2), basically use the unit upon removing the gland gasket and washer.

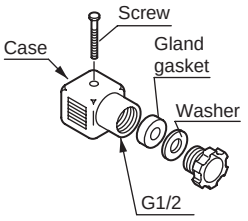

Rp (PS) threads

4F0 to 4F3 are provided with Rp threads to enable assembly with the manifold.
Rp threads are commonly used as a parallel female thread that fits with a tapered screw. (also indicated in JIS standards)

How to order gasket kit

M4F0-GASKET-KIT

M4F1-GASKET-KIT

M4F1-I-GASKET-KIT

M4F2-GASKET-KIT

M4F3-GASKET-KIT

4GA/B
M4GA/B
MN4GA/B
4GA/B (master)
4GB With sensor
4GD/E
M4GD/E
MN4GD/E
4GA4/B4
MN3E MN4E
W4GA/B2
W4GB4
MN3S0 MN4S0
4SA/B0
4KA/B
4KA/B (master)
4F
4F (master)
PV5G GMF
PV5 GMF
PV5S-0
3Q
MV3QR
3MA/B0
3PA/B
P/M/B
NP/NAP NVP
4G*0EJ
4F*0EX
4F*0E
HMV HSV
2QV 3QV
SKH
Silencer
TotAirSys (Total Air)
TotAirSys (Gamma)
Ending

M4F0 to 3 Manifold specifications sheet

Issued / /

Company

Contact

Order No.

● Contact ● Quantity Set ● Delivery date /

Slip No.	Order No.

Exhaust installation method/with bracket (CL, CU, IL, IU)

If instructions are provided for piping port mixtures and exhaust method mixtures, etc., with these manifold specifications, units will be delivered with the corresponding items assembled.

When using these specifications to place an order, contact CKD about the manifold model, etc.

● Manifold model No.

M4F ☐ ☐ 0 1 - ☐ - ☐ ☐ ☐ - ☐ - ☐ - ☐

- 0 1 2 3 — Solenoid position
- B — Solenoid position
- C — Port size (A/B port)
- D — Manual position (For solenoid valves)
- E — Electrical connections (For solenoid valves)
- F — Other options
- G — Station No.
- H — Exhaust installation method
- I — Voltage (For solenoid valves)

Solenoid valve			Installation position										Subtotal	Total
	Model	Bore size	1	2	3	4	5	6	7	8	9	10		
2-position single	4F ☐													
2-position double	4F ☐													
3-position all ports closed	4F ☐													
3-position A/B/R connection	4F ☐													
3-position P/A/B connection	4F ☐													
Masking plate														

Position/number of solenoids and cylinder port size (cylinder ports other than those listed below are not available)

Number of positions/solenoids: 2-position/single	2-position/double	3-position all ports closed	3 position/ A/B/R connection	3-position/ P/A/B connection	Series model No.	Manifold Model No.	Station No.	Cylinder port C
●					M4F0	AM4F01$^{0}_{1}$	2 to 10	M5 Rp1/8
	●					M4F02$^{0}_{1}$		
●					M4F1	M4F11$^{0}_{1}$		Rp1/8 Rp1/4
	●					12$^{0}_{1}$		
		●				13$^{0}_{1}$		
			●			14$^{0}_{1}$		
●					M4F2	M4F21$^{0}_{1}$		Rp1/4
	●					22$^{0}_{1}$		
		●				23$^{0}_{1}$		
			●			24$^{0}_{1}$		
●					M4F3	M4F31$^{0}_{1}$		Rp1/4 Rp3/8
	●					32$^{0}_{1}$		
		●				33$^{0}_{1}$		
			●			34$^{0}_{1}$		
				●		35$^{0}_{1}$		

· Note: Mixtures of series 4F0,1, 2, 3 are not available.

M4F2/3 Manifold specifications sheet

Issued / /

Company

Contact

Order No.

● Contact ● Quantity Set ● Delivery date /

Slip No.	Order No.

Exhaust installation method/without bracket (C, I)

If instructions are provided for piping port mixtures, partition plates, exhaust method mixtures, and individual supply, etc., with these manifold specifications, units will be delivered with the corresponding items assembled.
When using these specifications to place an order, contact CKD about the manifold model, etc.

● Manifold model No.

M4F ☐ ☐ 0 1 - ☐ - ☐ ☐ ☐ - ☐ - ☐ - ☐

- ☐ → 2 3
- B → Solenoid position
- C → Port size (A/B port)
- D → Manual position (For solenoid valves)
- E → Electrical connections (For solenoid valves)
- F → Other options
- G → Station No.
- H → Exhaust method
- I → Voltage (For solenoid valves)

Solenoid valve			Installation position										Subtotal	Total
	Model	Bore size	1	2	3	4	5	6	7	8	9	10		
2-position single	4F ☐													
2-position double	4F ☐													
3-position all port closed	4F ☐													
3-position A/B/R connection	4F ☐													
3-position P/A/B connection	4F ☐													
Masking plate														

Position/number of solenoids and cylinder port size (cylinder ports other than those listed below are not available)

Number of positions/solenoids: 2-position/single	2-position/double	3-position/all ports closed	3-position/ A/B/R connection	3-position/ P/A/B connection	Series model No.	Manifold model No.	Station No.	Cylinder port C
●					M4F2	M4F21$^{0}_{1}$	2 to 10	Rp1/4
	●					22$^{0}_{1}$		
		●				23$^{0}_{1}$		
			●			24$^{0}_{1}$		
●					M4F3	M4F31$^{0}_{1}$		Rp1/4 Rp3/8
	●					32$^{0}_{1}$		
		●				33$^{0}_{1}$		
			●			34$^{0}_{1}$		
				●		35$^{0}_{1}$		

· Note: Mixtures of series 4F2, 3 are not available.

4GA/B
M4GA/B
MN4GA/B
4GA/B (master)
4GB With sensor
4GD/E
M4GD/E
MN4GD/E
4GA4/B4
MN3E MN4E
W4GA/B2
W4GB4
MN3S0 MN4S0
4SA/B0
4KA/B
4KA/B (master)
4F
4F (master)
PV5G GMF
PV5 GMF
PV5S-0
3Q
MV3QR
3MA/B0
3PA/B
P/M/B
NP/NAP NVP
4G*0EJ
4F*0EX
4F*0E
HMV HSV
2QV 3QV
SKH
Silencer
TotAirSys (Total Air)
TotAirSys (Gamma)
Ending

M4F4/5 Manifold specifications sheet

Issued / /

Company

Contact

Order No.

● Contact ● Quantity Set ● Delivery date /

Slip No.	Order No.

If instructions are provided for combinations of 4F4/5 solenoid valves, changes of piping ports, partitioning plates, and individual exhaust, etc., with these manifold specifications, units will be delivered with the corresponding items assembled.
When using these specifications to place an order, contact CKD about the manifold model, etc.

● Manifold model No.

M4F ☐ ☐ **0 1** - ☐ - ☐ ☐ ☐ - ☐ - ☐ - ☐

- ☐ → 4 5
- B: Solenoid position
- C: Port size (A/B port)
- D: Manual position (For solenoid valves)
- E: Electrical connections (For solenoid valves)
- F: Other options
- G: Station No.
- H: Exhaust method
- I: Voltage (For solenoid valves)

Solenoid valve			Installation position										Subtotal	Total
	Model	Bore size	1	2	3	4	5	6	7	8	9	10		
2-position single	4F4													
	4F5													
2-position double	4F4													
	4F5													
3-position all ports closed	4F4													
	4F5													
3-position A/B/R connection	4F4													
	4F5													
3-position P/A/B connection	4F4													
	4F5													
Masking plate														

M4F6/7 Manifold specifications sheet

Issued / /

Company

Contact

Order No.

● Contact ● Quantity Set ● Delivery date /

Slip No.	Order No.

If instructions are provided for changes of piping ports, partition plates, and individual exhaust, etc., with these manifold specifications, units will be delivered with the corresponding items assembled.
When using these specifications to place an order, contact CKD about the manifold model, etc.

● Manifold model No.

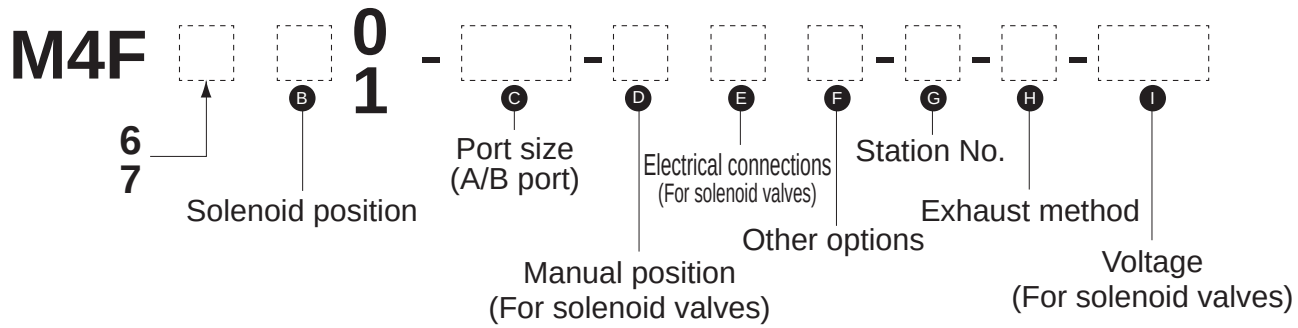

Solenoid valve			Installation position										Subtotal	Total
	Model	Bore size	1	2	3	4	5	6	7	8	9	10		
2-position single	**4F6**													
	4F7													
2-position double	**4F6**													
	4F7													
3-position all ports closed	**4F6**													
	4F7													
3-position A/B/R connection	**4F6**													
	4F7													
3-position P/A/B connection	**4F6**													
	4F7													
Masking plate														

Refer to the figure below for the wiring method of the terminal box and the C-line and D-line connectors.

Compact terminal box (B) wiring method

Wire the compact terminal box (B) by following the steps of ❶ to ❻ with reference to the figure below.

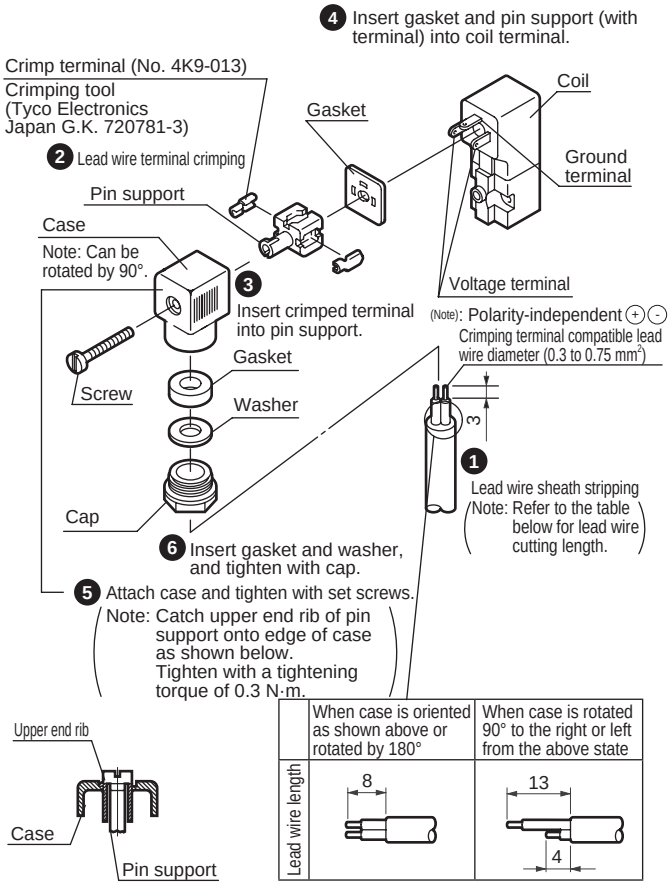

	When case is oriented as shown above or rotated by 180°	When case is rotated 90° to the right or left from the above state
Lead wire length	8	13 / 4

4F2 to 7 Series (DIN terminal box)

- The lead wire opening of the case is available for 4 directions each 90° apart.
- Connect the wiring to the DIN terminal with 1 and 2.
- Tighten the screws with a tightening torque of 0.5 N·m.

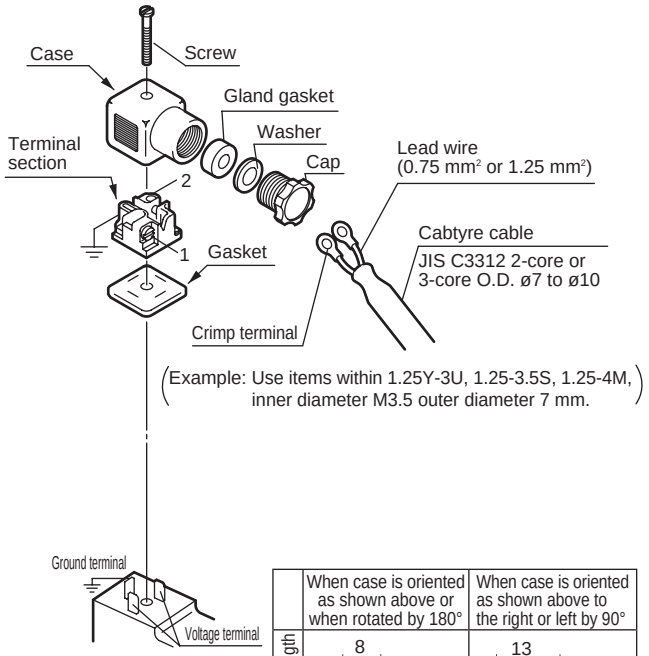

	When case is oriented as shown above or when rotated by 180°	When case is oriented as shown above to the right or left by 90°
Lead wire length	8	13 / 4

C type/D-connector wiring method

Wire with steps ❶ to ❻.

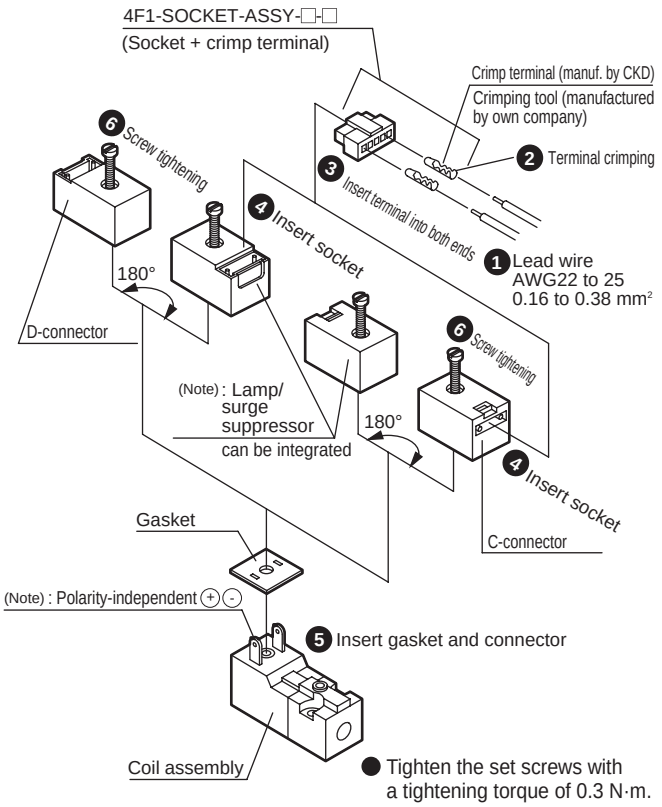

● Tighten the set screws with a tightening torque of 0.3 N·m.

Compact terminal box with lamp wiring method

Wire with steps ❶ to ❺.

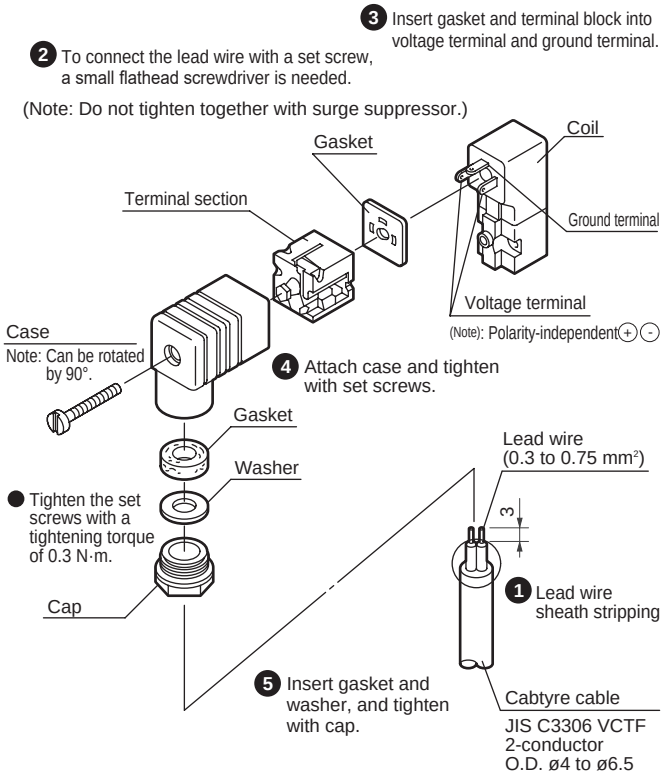

4F

Pneumatic valve/master valve

Pilot operated 5-port valve

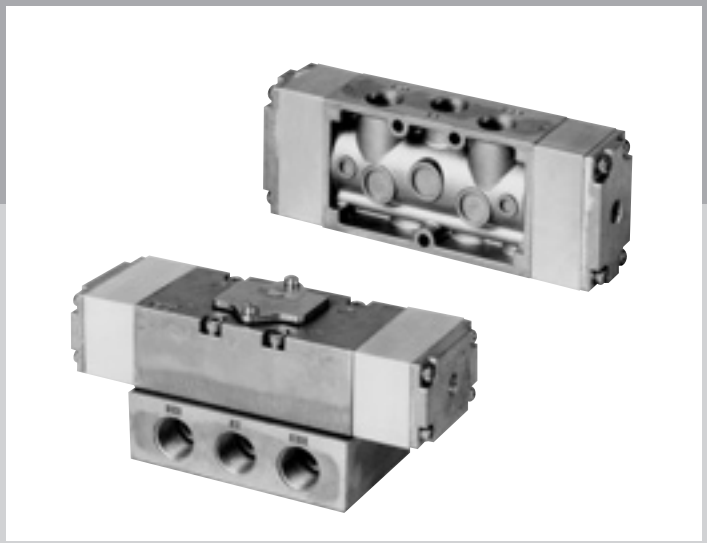

CONTENTS

Discrete valve

- Body piping (M4F0 to 3) 1454
- Sub-plate piping (4F4 to 7) 1454

Manifold

- Body piping (4F0 to 3) 1454
- Sub-plate piping (M4F4 to 7) 1454

⚠ Safety precautions 1464

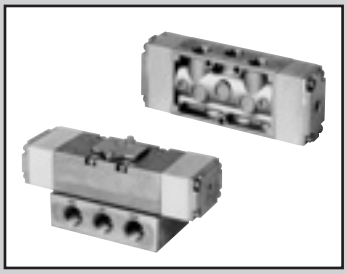

Master valve single unit/manifold
Pilot operated 5-port pneumatic valve

4F Series

● Cylinder bore size: ø10 to ø250

RoHS

● JIS symbol

2-position single

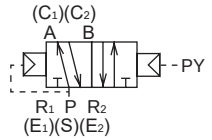

2-position double

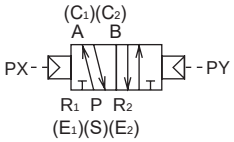

3-position all ports closed

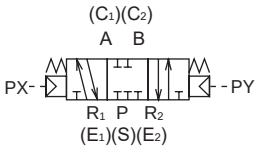

3-position A/B/R connection

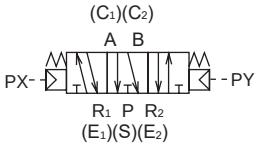

3-position P/A/B connection

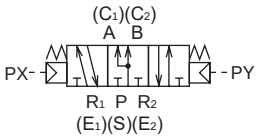

Common specifications

Item	Description
Valve and operation	Pilot operated soft spool valve
Working fluid	Compressed air
Max. working pressure MPa	1.0 (≈150 psi, 10 bar)
Min. working pressure MPa	Refer to main pressure section in the table below
Ambient temperature °C (*1)	-10 (14°F) to 60 (140°F) (no freezing)
Fluid temperature °C	5 (41°F) to 60 (140°F)
Lubrication	Not required (use turbine oil ISO VG32 if lubrication is necessary)
Vibration resistance m/s^2	50 or less
Shock resistance m/s^2	300 or less
Atmosphere	Cannot be used in corrosive gas environment.

*1: The ambient temperature indicates the temperature for storage and upon installation, which will differ from the fluid temperature during operation.

Individual specifications (discrete valve/manifold) 1 MPa ≈ 145.0 psi, 1 MPa = 10 bar

Position No. of solenoids					Model No.		Specifications					
							*1 Port size					
2-position single	2-position double	3-position all ports closed	3-position A/B/R connection	3-position P/A/B connection	Series Model No.		Air supply port S	Cylinder port C	Exhaust port E Pilot exhaust port PE	Pilot port	Main pressure MPa	Pilot signal pressure MPa
●					4F0 Series	A4F011	M5, Rp 1/8	M5, Rp 1/8	M5	Rc 1/8	0.15 to 1.0	P ≥ 0.6 x main pressure + 0.06
	●					4F021					0 to 1.0	P ≥ 0.15
●					4F1 Series	4F111	Rp 1/8 Rp 1/4	Rp 1/8 Rp 1/4	Rp 1/8	Rc 1/8	0.15 to 1.0	P ≥ 0.6 x main pressure + 0.06
	●					4F121					0 to 1.0	P ≥ 0.15
		●				4F131						P ≥ 0.2
			●			4F141						
●					4F2 Series	4F211	Rp 1/4	Rp 1/4	E:Rp 1/4 PE:Rp 1/8	Rc 1/8	0.15 to 1.0	P ≥ 0.6 x main pressure + 0.06
	●					4F221					0 to 1.0	P ≥ 0.15
		●				4F231						P ≥ 0.2
			●			4F241						
●					4F3 Series	4F311	Rp 1/4 Rp 3/8	Rp 1/4 Rp 3/8	E:Rp 1/4 Rp 3/8 PE:Rp 1/8	Rc 1/8	0.15 to 1.0	P ≥ 0.6 x main pressure + 0.06
	●					4F321					0 to 1.0	P ≥ 0.15
		●				4F331						P ≥ 0.2
			●			4F341						
				●		4F351						
●					4F4 Series	4F411	Rc 1/4 Rc 3/8	Rc 1/4 Rc 3/8	E:Rc 1/4 Rc 3/8 PE:Rc 1/8	Rc 1/8	0.15 to 1.0	P ≥ 0.6 x main pressure + 0.06
	●					4F421					0 to 1.0	P ≥ 0.15
		●				4F431						P ≥ 0.2
			●			4F441						
				●		4F451						
●					4F5 Series	4F511	Rc3/8 Rc1/2	Rc3/8 Rc1/2	E:Rc 3/8 Rc 1/2 PE:Rc 1/8	Rc 1/8	0.15 to 1.0	P ≥ 0.6 x main pressure + 0.06
	●					4F521					0 to 1.0	P ≥ 0.15
		●				4F531						P ≥ 0.2
			●			4F541						
				●		4F551						
●					4F6 Series	4F611	Rc1/2 Rc3/4	Rc1/2 Rc3/4	E:Rc 1/2 Rc 3/4 PE:Rc 1/4	Rc 1/8	0.15 to 1.0	P ≥ 0.6 x main pressure + 0.06
	●					4F621					0 to 1.0	P ≥ 0.15
		●				4F631						P ≥ 0.2
			●			4F641						
				●		4F651						
●					4F7 Series	4F711	Rc3/4 Rc1	Rc3/4 Rc1	E:Rc 3/4 Rc1 PE:Rc 1/4	Rc 1/8	0.15 to 1.0	P ≥ 0.6 x main pressure + 0.06
	●					4F721					0 to 1.0	P ≥ 0.15
		●				4F731						P ≥ 0.2
			●			4F741						
				●		4F751						

*1: There are options available for port size other than those in the above table. Refer to the model No. display on page 1456.

Flow characteristics

Series	Model No.	Port size	C[dm³/(s·bar)]	b	S(mm²)
4F0	A4F011	M5	0.61	0.35	-
	4F021				
	A4F011	Rp1/8	0.74	0.27	-
	4F021				
4F1	4F111	Rp1/8	2.0	0.33	-
	4F121				
	4F131	Rp1/4	1.5	0.31	
	4F141		1.6	0.29	
4F2	4F211	Rp1/4	3.0	0.33	-
	4F221				
	4F231		2.5	0.43	
	4F241				
4F3	4F311	Rp1/4	3.9	0.42	-
	4F321				
	4F331		4.0	0.35	
	4F341		4.5	0.42	
	4F351		4.0	0.35	
	4F311	Rp3/8	5.8	0.30	-
	4F321				
	4F331		4.4	0.42	
	4F341		5.1	0.46	
	4F351		4.4	0.42	
4F4	4F411	Rc1/4 Rc3/8	5.0	0.21	-
	4F421				
	4F431		4.7	0.24	
	4F441		5.3	0.29	
	4F451		5.3	0.29	
4F5	4F511	Rc3/8 Rc1/2	10.0	0.32	-
	4F521				
	4F531		9.7	0.28	
	4F541		9.8	0.25	
	4F551				
4F6	4F611	Rc1/2 Rc3/4	18.0	0.31	-
	4F621				
	4F631		15.0	0.23	
	4F641				
	4F651				
4F7	4F711	Rc3/4 Rc1	-	-	160
	4F721				
	4F731				
	4F741				
	4F751				

*1: Effective cross-sectional area “S” and sonic conductance “C” are converted as S ≈ 5.0 x C.

How to order single valve/body piping

4F2 1 1 - 08 - P

Ⓐ Model No. Ⓑ Solenoid position Ⓒ Port size Ⓓ Option

Code	Description	Ⓐ Model No. Body piping A4F0(*1)	4F1	4F2	4F3
Ⓑ Solenoid position					
1	2 position single	●	●	●	●
2	2-position double	●	●	●	●
3	3-position all ports closed		●	●	●
4	3-position A/B/R connection		●	●	●
5	3-position P/A/B connection				●
Ⓒ Port size					
M5	M5	●			
06	Rp 1/8	●	●		
08	Rp 1/4		●	●	●
10	Rp 3/8				●
06N	NPT 1/8		●		
08N	NPT 1/4		●	●	●
10N	NPT 3/8				●
06G	G 1/8		●		
08G	G 1/4		●	●	●
10G	G 3/8				●
Ⓓ Option					
Blank	No	●	●	●	●
P	Installation feet (for 2-position single)	●	●	●	●
P1	Installation feet	●	●	●	●
N	Plug included (for 3-port valve)	●	●	●	●
H	Check valve attached (only for 3-position all ports closed)			●	●
NC	3-way valve used plug assembly (C1(A).E1(R1)Assembly)	●	●	●	●
NO	3-way valve used plug assembly (C2(B).E2(R2)Assembly)	●	●	●	●

[Example of model No.]

4F111-06-P

Ⓐ Model: 4F1
Ⓑ Solenoid position: 2-position single
Ⓒ Port size: Rp1 / 8
Ⓓ Option: with P type installation feet

*1: With the single type, (A) will be A4F011.

How to order single valve/sub-plate piping

4F4 1 1 - 08 - P

Ⓐ Model No. Ⓑ Solenoid position Ⓒ Port size Ⓓ Option

Code	Description	Ⓐ Model No. Sub-plate piping 4F4	4F5	4F6	4F7
Ⓑ Solenoid position					
1	2 position single	●	●	●	●
2	2-position double	●	●	●	●
3	3-position all ports closed	●	●	●	●
4	3-position A/B/R connection	●	●	●	●
5	3-position P/A/B connection	●	●	●	●
Ⓒ Port size					
08	Rc 1/4	●			
10	Rc 3/8	●	●		
15	Rc 1/2		●	●	
20	Rc 3/4			●	●
25	Rc 1				●
08N	NPT 1/4	●			
10N	NPT 3/8	●	●		
15N	NPT 1/2		●	●	
20N	NPT 3/4			●	●
25N	NPT 1				●
08G	G 1/4	●			
10G	G 3/8	●	●		
15G	G 1/2		●	●	
20G	G 3/4			●	●
25G	G 1				●
Ⓓ Option					
Blank	No	●	●	●	●
P	Installation feet	●	●	●	●
N	Plug included (for 3-port valve)	●	●	●	●
H	Check valve attached (for 3-position all ports closed)	●	●	●	●
NC	3-way valve used plug assembly (C1(A).E1(R1)Assembly)	●	●	●	●
NO	3-way valve used plug assembly (C2(B).E2(R2)Assembly)	●	●	●	●

[Model No. example]

4F411-08-P

Ⓐ Model: 4F4
Ⓑ Solenoid position: 2-position single
Ⓒ Port size: Rp1 / 4
Ⓓ Option: with P type installation feet

How to order manifold/body piping

● Master valve for manifold

4F2 1 1 - 08 - ○ ---- Refer to the following precautions.

4F3 1 8 - 08 - ○ —— I

● Manifold

M 4F3 1 1 - 08 - ○ - 3 - CU - S1 S2 S3 S4 S5 MP

4F3: up to S5
Up to 4F1.2:S4
Up to 4F0:S2

For mix manifolds, create a manifold specifications sheet (pages 1448 and 1449).

Ⓐ Model No.

Ⓑ Solenoid position

Ⓒ Port size

Ⓓ Other options

Ⓔ Station No.

Ⓕ Exhaust installation method

Ⓐ Model No.		Body piping			
Code	Description	A4F0(*1)	4F1	4F2	4F3
Ⓑ Solenoid position					
1	2 position single	●	●	●	●
2	2-position double	●	●	●	●
3	3-position all ports closed		●	●	●
4	3-position A/B/R connection		●	●	●
5	3-position P/A/B connection				●
8	Mix manifold	●	●	●	●
Ⓒ Port size					
M5	M5	●			
06	Rp 1/8	●	●		
08	Rp 1/4		●	●	●
10	Rp 3/8				●
06N	NPT 1/8		●		
08N	NPT 1/4		●	●	●
10N	NPT 3/8				●
06G	G 1/8		●		
08G	G 1/4		●	●	●
10G	G 3/8				●
Ⓓ Other options					
Blank	No option	●	●	●	●
NC	3-way valve used plug assembly (C1(A).E1(R1)Assembly)	●	●	●	●
NO	3-way valve used plug assembly (C2(B).E2(R2)Assembly)	●	●	●	●
Ⓔ Station No.					
2	2 stations	●	●	●	●
to	to				
10	10 stations				
Ⓕ Exhaust installation method					
CL	Common exhaust with L-bracket (for 2-position single)	●	●	●	●
CU	Common exhaust with U-bracket	●	●	●	●
IL	Individual exhaust with L-bracket (for 2-position single)	●	●	●	●
IU	Individual exhaust with U-bracket	●	●	●	●
C	Common exhaust			●	●
I	Individual exhaust		●	●	●

⚠ Precautions for model No. selection

Separate use of the single master valves for manifolds as listed below depending on the model.

■ When 4F0 to 4F1

4F1 B 1 - C - D

When using the unit as a repair item, separately also purchase the gasket kit listed below depending on the model.

M4F0-GASKET-KIT
M4F1-GASKET-KIT
M4F1-I-GASKET-KIT

■ When 4F2/4F3

Exhaust installation method CL, CU, IL, IU
* Installed on the manifold.

4F3 B 1 - C - D

When using the unit as a repair item, separately also purchase the gasket kit listed below depending on the model.

M4F2-GASKET-KIT
M4F3-GASKET-KIT

■ When the exhaust installation method is C or I
* Connect the body.

4F3 B 8 - C — D - F

(However, when item Ⓕ is C: blank, when I: write I)

The gasket kit is attached.
*1: With the single type, (A) will be A4F011.

[Example of model No.]

M4F341-08-NO-5-C

Ⓐ Model : M4F3
Ⓑ Solenoid position : 3-position A, B, R connection
Ⓒ Port size : Rp1 / 4
Ⓓ Other options : 3-way valve used plug assembly (C2:B, E2:R2)
Ⓔ Station No. : 5 stations
Ⓕ Exhaust installation method : common exhaust

How to order manifold/sub-plate piping

● Master valve for manifold

4F4 1 8 - 00 - ( )

● Manifold

M 4F4 1 1 - 08 - ( ) - 3 - C - S_1 S_2 S_3 S_4 S_5 MP

For mix manifolds, create a manifold specifications sheet (pages 1450 and 1451).

Ⓐ Model No.

Ⓑ Solenoid position

Ⓒ Port size

Ⓓ Other options

Ⓔ Station No.

Ⓕ Exhaust installation method

Code	Description	Ⓐ Model No. Sub-plate piping 4F4	4F5	4F6	4F7
Ⓑ Solenoid position					
1	2 position single	●	●	●	●
2	2-position double	●	●	●	●
3	3-position all ports closed	●	●	●	●
4	3-position A/B/R connection	●	●	●	●
5	3-position P/A/B connection	●	●	●	●
8	Mix manifold	●	●	●	●
Ⓒ Port size					
08	Rc 1/4	●			
10	Rc 3/8		●		
D15	Rc 1/2			●	
E20	Rc 3/4				●
08N	NPT 1/4	●			
10N	NPT 3/8		●		
D15N	NPT 1/2			●	
E20N	NPT 3/4				●
08G	G 1/4	●			
10G	G 3/8		●		
D15G	G 1/2			●	
E20G	G 3/4				●
Ⓓ Other options					
Blank	No option	●	●	●	●
NC	3-way valve used plug assembly (C1(A).E1(R 1)Assembly)	●	●	●	●
NO	3-way valve used plug assembly (C2(B).E2(R 2)Assembly)	●	●	●	●
Ⓔ Station No.					
2	2 stations	●	●	●	●
to	to				
10	10 stations				
Ⓕ Exhaust installation method					
C	Common exhaust	●	●	●	●

[Example of model No.]

M4F441-08-NC-5-C

Ⓐ Model : M4F4
Ⓑ Solenoid position : 3-position A, B, R connection
Ⓒ Port size : Rp1 / 4
Ⓓ Other options : 3-way valve used plug assembly (C1:A, E1:R1)
Ⓔ Station No. : 5 stations
Ⓕ Exhaust installation method : common exhaust

MEMO

Dimensions

A4F011
● 2-position single

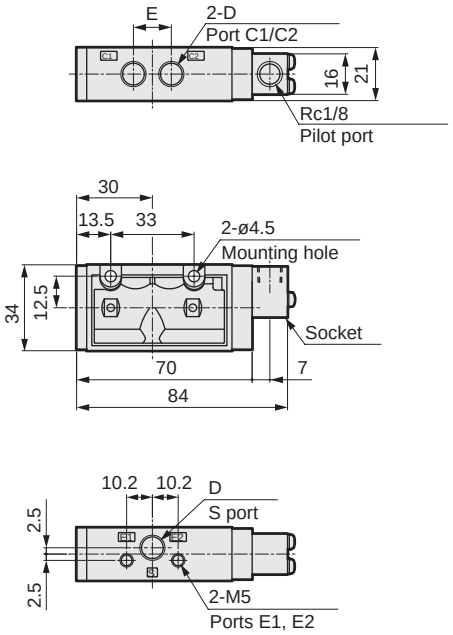

4F021
● 2-position double

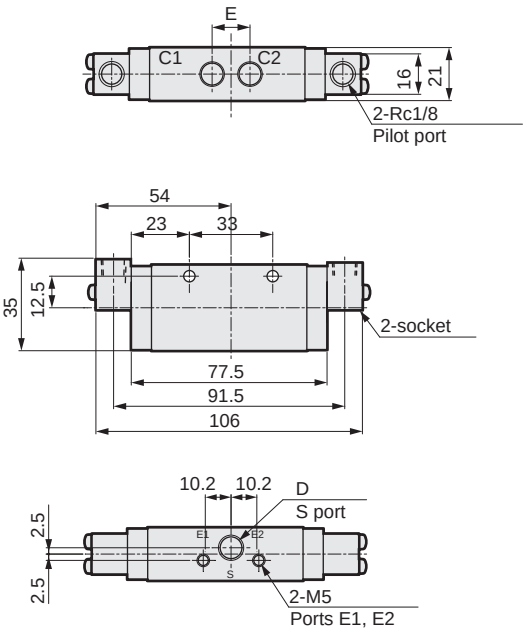

Code / Bore size	D	E
M5	M 5 x 0.8	10.4
06	Rp1/8	15

4F111
● 2-position single

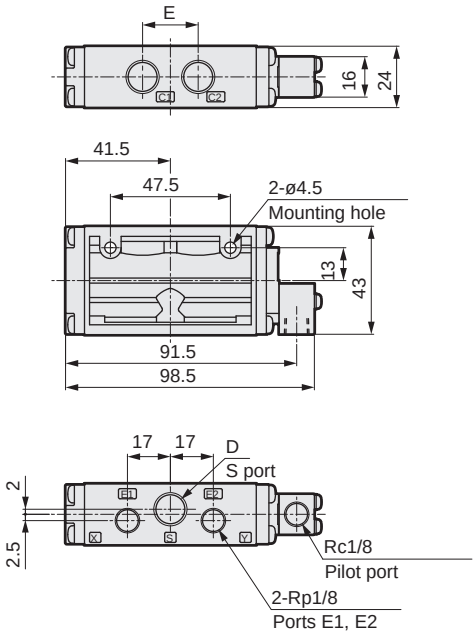

4F121/4F131/4F141
● 2-position double solenoid, 3-position all ports closed, A/B/R connection

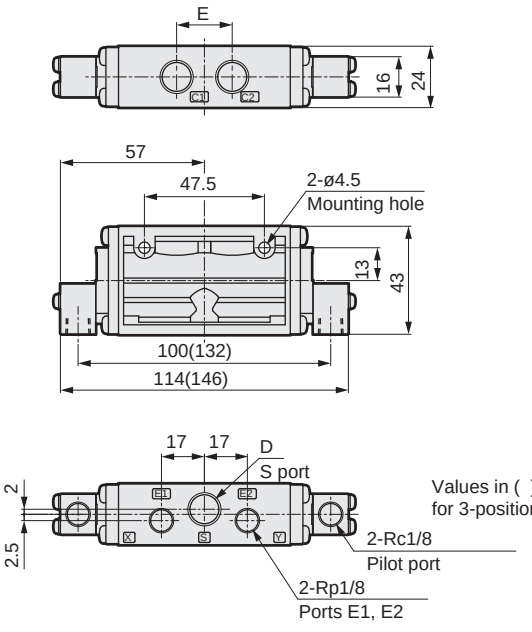

Values in ( ) are dimensions for 3-position valves.

Code / Bore size	D	E
06	Rp1/8	20
08	Rp1/4	22

* Refer to pages 1378 and 1380 for type with mounting plate (P, P1).

Dimensions

4F211/4F221

● 2-position single, double

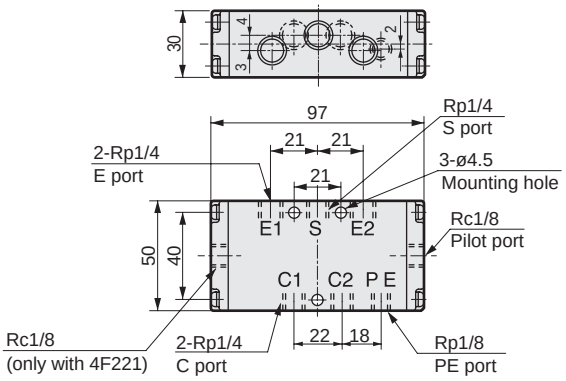

4F231/4F241

● 3-position all ports closed, A/B/R connection

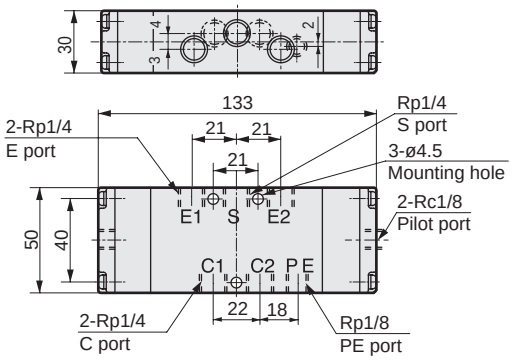

4F311/4F321

● 2-position single, double

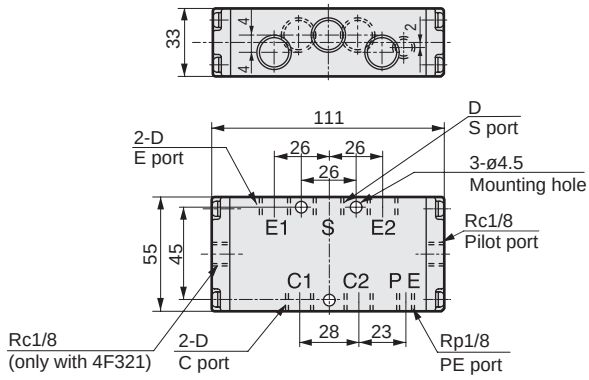

Code / Bore size	D
08	Rp1/4
10	Rp3/8

4F331/4F341/4F351

● 3-position all ports closed, A/B/R connection

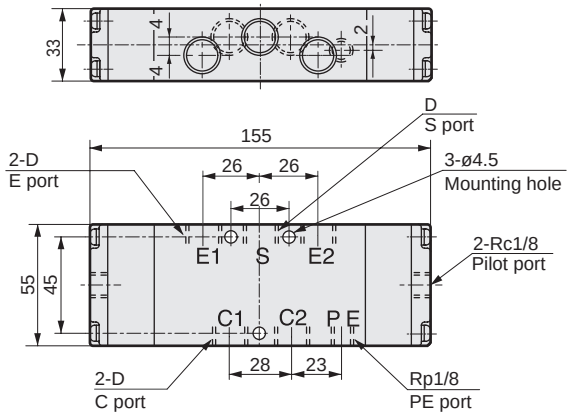

* Refer to pages 1382 and 1384 for type with mounting plate (P).

Dimensions

4F411/4F421

● 2-position single

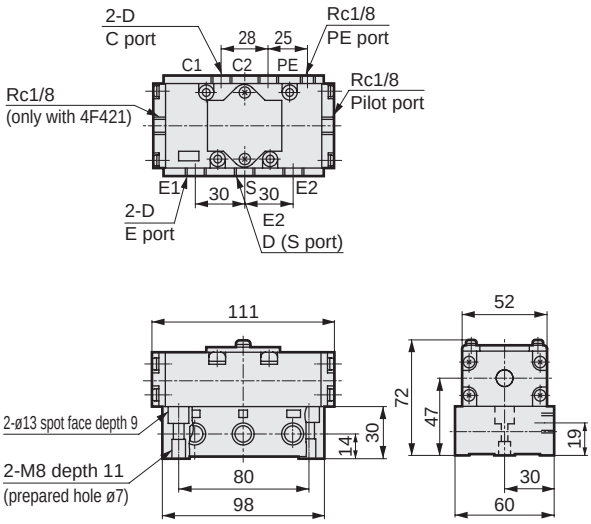

4F431/4F441/4F451

● 3-position all ports closed, A/B/R connection

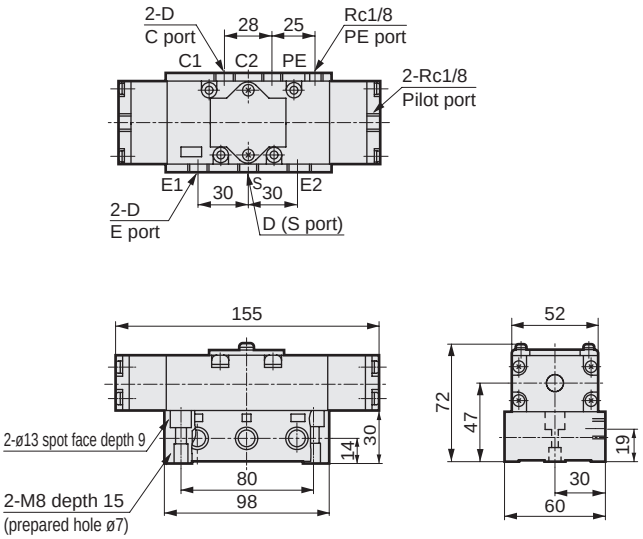

Code / Bore	D
08	Rc1/4
10	Rc3/8

4F511/4F521

● 2-position single, double

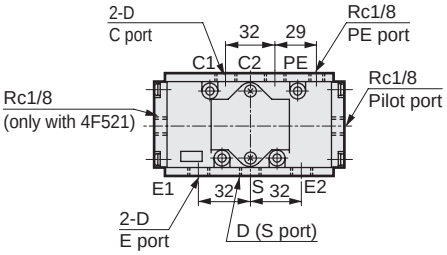

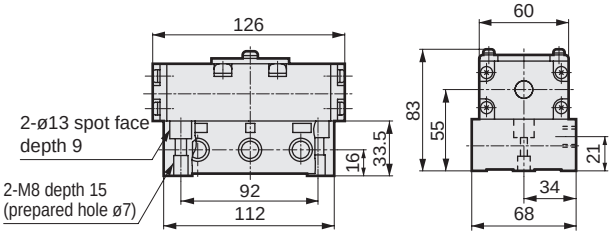

4F531/4F541/4F551

● 3-position all ports closed, A/B/R connection

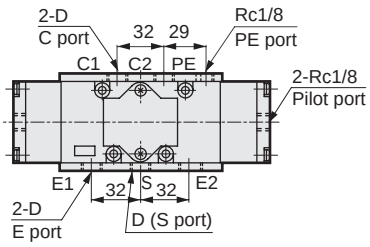

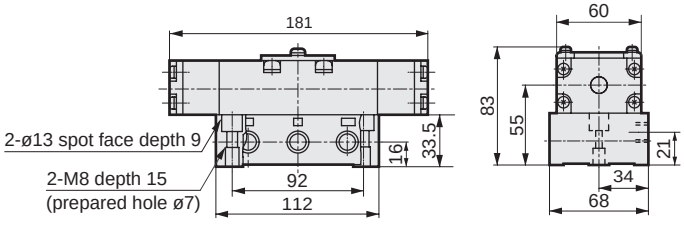

Code / Bore size	D
10	Rc3/8
15	Rc1/2

* Refer to pages 1392 and 1394 for type with mounting plate (P).

Dimensions

4F611/4F621

● 2-position single, double

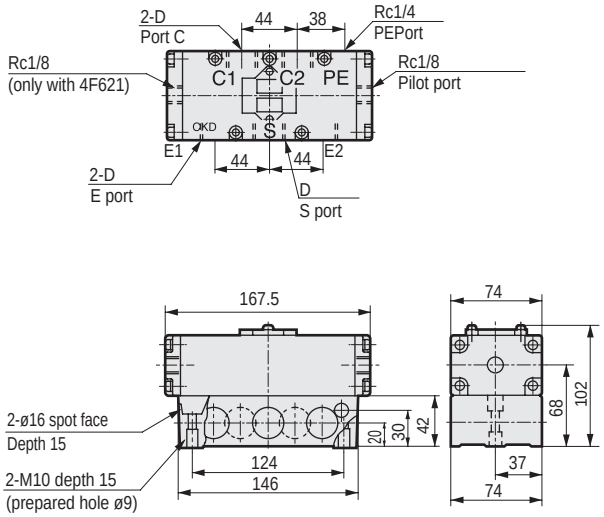

Code / Bore size	D
15	Rc1/2
20	Rc3/4

4F631/4F641/4F651

● 3-position all ports closed, A/B/R connection

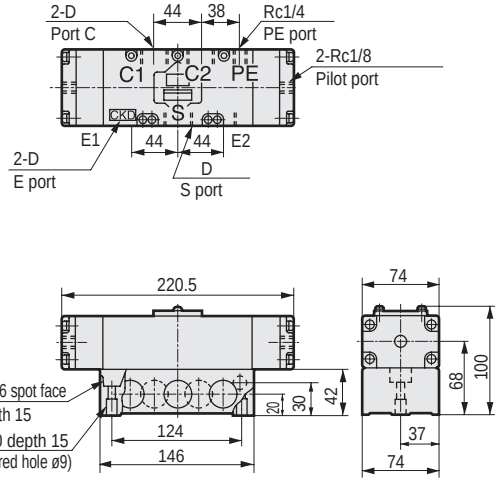

4F711/4F721

● 2-position single, double

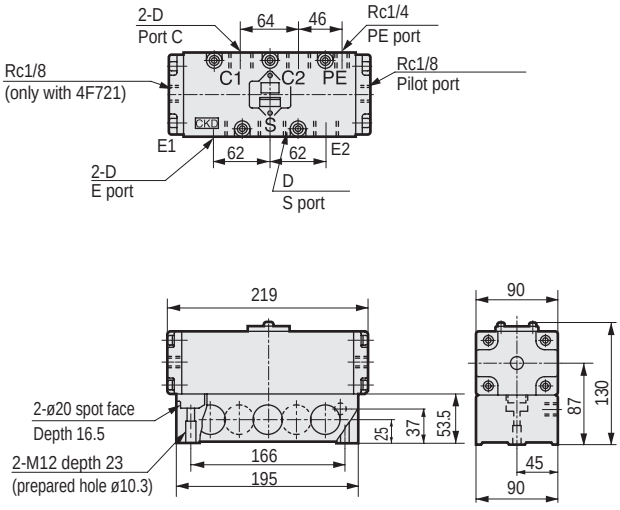

Code / Bore size	D
20	Rc3/4
25	Rc1

4F731/4F741/4F751

● 3-position all ports closed, A/B/R connection

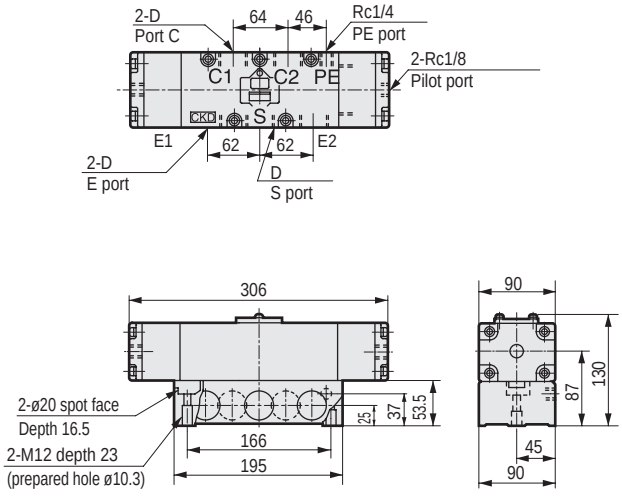

* Refer to pages 1396 and 1398 for type with mounting plate (P).

Safety Precautions

Be sure to read this section before use.
Refer to Intro Page 59 for general precautions for using valves.

Product-specific cautions: Pilot operated 5-port valve 4F Series

Mounting, installation and adjustment

1. Common

⚠ CAUTION

■ The body sliding part uses a lip packing.
Be sure to use port P(S) for air supply.

Use/maintenance

1. Common

⚠ CAUTION

■ Do not block the PE port.
Pilot pressure will not be discharged and will fail to operate.

■ With the DIN terminal box, as using the unit with a high ambient temperature and continuously powered specifications will promote deterioration of the gaskets, be sure to regularly replace the gaskets.

■ The external pilot is designed with low pressure specifications specifically for P (S) port pressurization. Contact CKD for applications with vacuums or pressurization from other ports.

■ Use the manual button for confirmation of operation during test operation. When used for a long period of time in the locked state, the locking mechanism may fail and switch the unit from ON to OFF.

■ Station No.
When operating 6 or more stations of valves at the same time, configure the air supply pressure (S) from both ends of the manifold block and release the exhaust (E) into the atmosphere from both ends as well. Not configuring these from both sides may cause malfunctions due to the exhaust pressure.

■ With the 4F0 to 4F3 series, the connection port is prepared with Rp threading (parallel threading). In order to prevent leakage with the connection of piping, connect the pipes upon securely wrapping sealing tape or applying an adhesive.

■ Precautions upon assembly of round terminal box cap
The cap must be assembled in a certain direction. When the cap is to be assembled after performing wiring work, etc., make sure to assemble the cap with attention to the assembly direction. (In the figure below, align with the direction of the CKD logo mark) When placed in the opposite direction, the cap cannot be assembled.

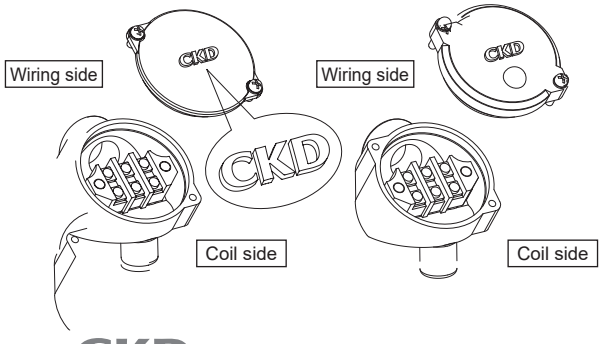

2. Manual override

⚠ CAUTION

■ Manual override
As this is a pilot solenoid valve, the main valve will not be switched even if the manual override is operated unless air is supplied to the S port.

■ Non-locking manual override
With the non-locking manual override, push the manual shaft with a rod. With the 2-position single solenoid and 3-position solenoid, the valve will be in the same state as when energized when the shaft is being pressed and will recover when the shaft is released. With the 2-position double solenoid, pressing the manual shaft of the X (Y) side will switch the unit into the same state as when X (Y) is energized and the main valve will retain this state even after the manual shaft has been released. For return, operate the manual shaft on the Y (X) side.

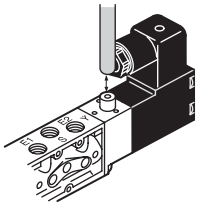

Push with a rod ø7 or less
(With the 4F0 and 1 types, push with a rod ø3 or less.)

■ Locking manual override
If the locking manual override is turned clockwise by approximately 45° with a screwdriver, the valve will be in the same state as when energized and locked. Do not force the rotation, as rotating the device further clockwise after the valve has been locked will cause damage. Be sure to release the lock (0 position) of the locking manual override prior to starting normal operation.

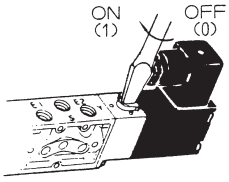

3. Outdoor

⚠ CAUTION

■ When using the unit outdoors, do not configure the exhaust ports (E1, E2, and PE ports) for atmosphere release, and be sure to implement measures to prevent foreign matter, dust, and rainwater from entering the body.
In addition, implement waterproof measures for the electrical wires and piping with the use of cable glands, etc.

■ After delivery of the product, do not change the direction of the conduits of the terminal box. Doing so may cause water to infiltrate the charging sections.

■ This product is provided with performance which enables outdoor use in standard environmental conditions.
This product satisfies certain performance requirements after implementation of an accelerated weathering test (sunshine weathering meter) for 1000 hours and a (salt, dry, moisture) compound cycle test for 960 hours.
However, the risk of defects such as rust occurring in a short amount of time may increase when using the unit in a special environment. Consult with CKD when using this device in a special environment.

Pilot operated 5-port valve ISO valve

Overview

The PV5G/PV5 series ISO valves are pilot operated 5-port valves in compliance with the ISO standards which regulate international valve mounting dimensions.
Suitable for operating cylinders of up to ø160.

Features

Compliant with ISO standards
The mounting pitch, thread size, and flow path dimensions of the valve body are in accordance with ISO standards.

Energy saving
A low wattage design of 1 W (without lamp) and 1.2 W (with lamp) will contribute to conservation of energy.

Space saving
Compact design with a valve width of 38 to 50 mm. Contributes to reduction of the size of devices, etc., being assembled.

Degree of protection of IP65 or equivalent
The dust-proof and jet-proof structure of IP65 or equivalent is suitable for harsh environments.

Resource saving
Use of special soft packing.
Can be used with no lubrication

Compatible with long term use
The soft spool method with proven performance has been employed.
Service life is long.

Compatible with driving a 2-piston cylinder
The exhaust pressurized type has been made available as a series.
Optimal for driving a 2-piston cylinder used in welders, etc.

Abundant options available
Size 1 and size 2 mix manifolds.

	Page
Product introduction	1466
Series variation	1468
Electrical connections list (wire connections/circuit)	1470
DIN terminal box **PV5G/GMF** Series	1471
I/0 connector **PV5/GMF** Series	1499
Master valve **PV5S-0** Series	1527
⚠ Safety precautions	1534

Introducing the new ISO valve that's now more

New ISO valve PV5G / PV5 / GMF Series that's compact, lightweight and energy efficient, with improved operability, service life and environmental performance.



Compact body size

It has become more compact while improving the total performance.

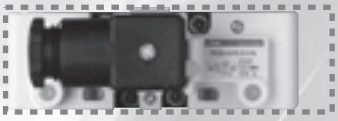

compared to CKD conventional products **10%** LESS

Improvement of operability

Manual buttons and conduction indicator lamp are optimally positioned in consideration of the ease of operation, visibility, etc. Operability has improved in adjustment, maintenance and the like when installing.

Uses 2-color display lamp

Solenoid a: red
Solenoid b: green

▼Enlarged view



Improvement of reliability and safety

Rubber cover for manual override button.
Prevents intake of foreign matter leading to misoperation.
It emphasizes safety, making it ideal for operation using manual tools.

Simple, easy piping

The valve body does not protrude over the base of the manifold, and does not interfere with the rotation of a wrench or similar tool, thus promoting efficient piping work.

Wrench can be rotated at a large angle.

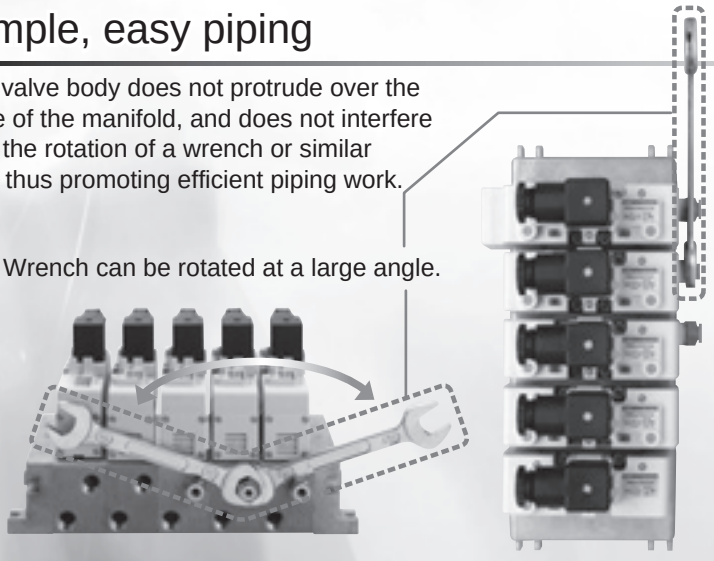

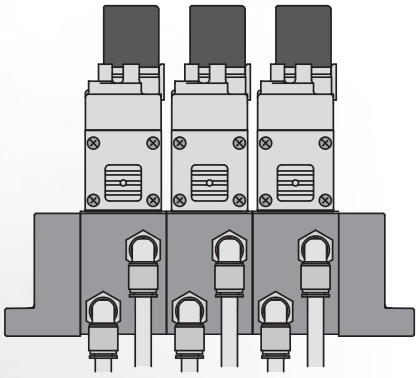

A/B ports are placed offset, making it easier to install fittings.

compact and easier to use.

Low wattage design **1W**

Power consumption is reduced from conventional 1.8 W to 1 W.
Significantly more energy efficient.

Degree of protection of **IP65** or equivalent

The dust-proof and water jet-proof structure of IP65 or equivalent is suitable for harsh environments.

Standard I/O connector

DIN terminal box and I/O connector are available as standard for wire connections.

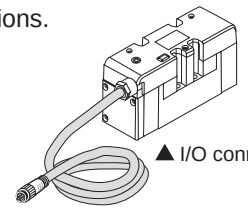

▲ I/O connector

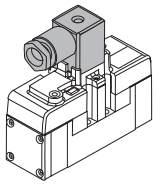

▲ DIN terminal box

Longer service life

Service life is further extended by improvements in structure of sliding section and packing, etc.

Lighter weight

The body is made of aluminum and the rest is resin. Features a lightweight design.

Compliant with ISO standards

Pilot operated pneumatic 5-port valve with mounting pitch, thread size and flow path dimensions that are in accordance with ISO standards.

Improved design

The design has been renewed with white coloring and rounded corners.

■ PV5G/PV5/GMF/PV5S-0 Series

	Series/appearance			Applicable cylinder bore size	Port size		Voltage
ISO size 1	Single valve **PV5G-6 Series** 	DIN terminal box	Manifold **GMF1 Series** 	**MAX. ø100**	P/A/B	Rc1/4,Rc3/8	100 VAC 110 VAC 200 VAC 220 VAC 12 VDC 24 VDC
					R_1/R_2	Rc3/8,Rc1/2	
	Single valve **PV5-6R Series** 	I/O connector			P/A/B	Rc1/4,Rc3/8	24 VDC
					R_1/R_2	Rc3/8,Rc1/2	
	Master valve **PV5S-6-0** 	–	–	**MAX. ø100**	P/A/B	Rc1/4,Rc3/8	–
					R_1/R_2	Rc3/8	
ISO size 2	Single valve **PV5G-8 Series** 	DIN terminal box	Manifold **GMF2 Series** 	**MAX. ø160**	P/A/B	Rc3/8,Rc1/2,Rc3/4	100 VAC 110 VAC 200 VAC 220 VAC 12 VDC 24 VDC
					R_1/R_2	Rc1/2,Rc3/4	
	Single valve **PV5-8R Series** 	I/O connector	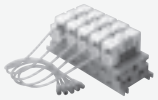		P/A/B	Rc3/8,Rc1/2,Rc3/4	24 VDC
					R_1/R_2	Rc1/2,Rc3/4	
	Master valve **PV5S-8-0** 	–	–	**MAX. ø160**	P/A/B	Rc3/8,Rc1/2,Rc3/4	–
					R_1/R_2	Rc1/2,Rc3/4	

Series/appearance				Position Number of solenoids JIS symbol	Valve performance		Voltage
Size	Connection	Discrete valve	Individual wiring manifold * The figure is an example of a DIN terminal box.		Cylinder bore size	Flow characteristics C [dm³/(s·bar)]	
ISO size 1	DIN terminal box	**PV5G-6**  Single unit ..... page 1472 Manifold ..... page 1484	● Common exhaust method 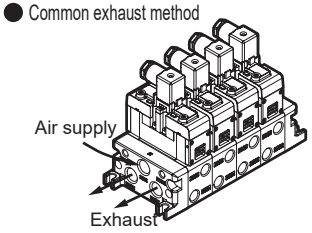 ● Individual exhaust method 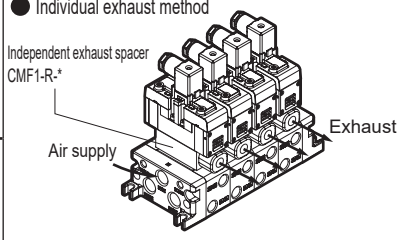 ● Individual supply method 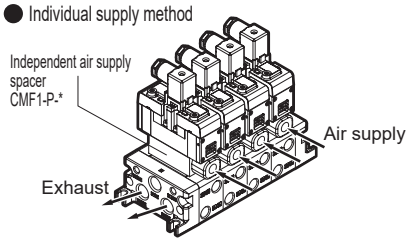 ● Common method 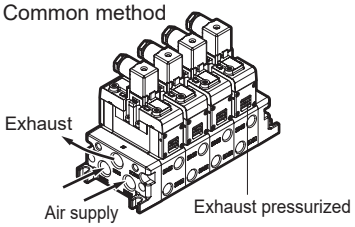	● 2-position single 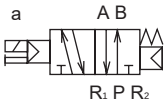 ● 2-position double 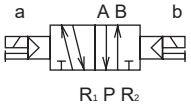 ● 3-position all ports closed 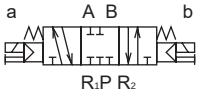 ● 3-position all ports closed (non-leaking) 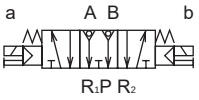	MAX. ø100	P→A/B 3.4 to 6.3 A/B→R1/R2 3.0 to 6.9 *1	100 VAC 200 VAC 12 VDC 24 VDC 110 VAC 220 VAC *2
	I/O connector	**PV5-6R** 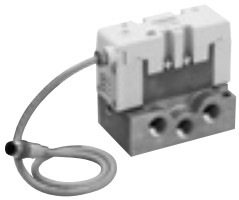 Single unit ..... page 1500 Manifold ..... page 1512					
ISO size 2	DIN terminal box	**PV5G-8**  Single unit ..... page 1478 Manifold ..... page 1488	● Different pressure supply method With this method of supplying both higher and lower pressure to a single manifold, a flow path cutoff plate (GM1-01) is inserted between the manifold blocks with different pressures. ● Individual supply/exhaust method Air supply and exhaust are processed individually by inserting an independent air supply spacer (CMF1-P-*) and an independent exhaust spacer (CMF1-R-*) between the manifold block and the valve body. ● Rear piping method When piping cannot be installed from the side, it is possible to install all or part of the piping of A/B ports from the bottom surface of the manifold.	● 3-position A/B/R connection  ● 3-position P/A/B connection  ● 2-position single (Exhaust pressurized) 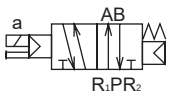 ● 2-position single (Exhaust pressurized) 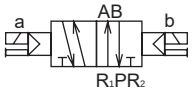	MAX. ø160	P→A/B 6.6 to 11.0 A/B→R1/R2 6.2 to 13.0 *1	100 VAC 200 VAC 12 VAC 24 VDC 110 VDC 220 VAC *2
	I/O connector	**PV5-8R** 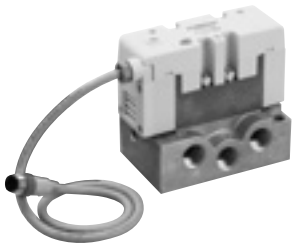 Single unit ..... page 1506 Manifold ..... page 1516					

*1: Effective cross-sectional area "S" and sonic conductance "C" are converted as S ≈ 5.0 x C.
*2: The I/O connector is only available for 24 VDC.

ISO size	Size 1				Size 2			
	Single unit: PV5G-6, PV5-6R Series Manifold: GMF1 Series				Single unit: PV5G-8, PV5-8R Series Manifold: GMF2 Series			
Sub-plate	DIN terminal box Page 1472 I/O connector Page 1500				DIN terminal box Page 1478 I/O connector Page 1506			
 	Model No.	Connection	Port size P/A/B	Port size R_1, R_2	Model No.	Connection	Port size P/A/B	Port size R_1, R_2
	CB1-A02	Side piping	Rc1/4	Rc3/8	CB2-A03	Side piping	Rc3/8	Rc1/2
					CB2-A04		Rc1/2	
	CB1-A03		Rc3/8		CB2-A06		Rc3/4	Rc3/4
Manifold	DIN terminal box Page 1484 I/O connector Page 1512				DIN terminal box Page 1488 I/O connector Page 1516			

Model No.	Item		Specifications	Model No.	Item		Specifications
GMF1	Station No.		1 station to 10 stations	GMF2	Station No.		1 station to 10 stations
	Piping connection	A/B Port	Rc1/4, 3/8		Piping connection	A/B Port	Rc3/8, 1/2
		$P/R_1/R_2$ port	Rc3/8, 1/2			$P/R_1/R_2$ port	Rc1/2, 3/4
	Option	Independent air supply spacer	CMF1-P-*		Option	Independent exhaust spacer	CMF2-P-*
		Independent exhaust spacer	CMF1-R-*			Independent exhaust spacer	CMF2-R-*
		Masking plate	CM1-00			Masking plate	CM2-00
		Spacer regulator	CMF1-SR-P/A/B			Spacer regulator	CMF2-SR-P/A/B
		Air pilot check valve	CMF1-PC			Air pilot check valve	CMF2-PC

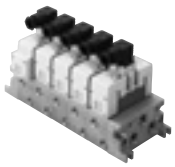
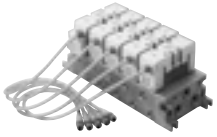

Manifold method	(As an option, a GMFZ which is a combination of GMF1 and GMF2 is also available.)		
1	Common exhaust method	1	Common exhaust method
2	Individual exhaust method	2	Individual exhaust method
3	Individual supply method	3	Individual supply method
4	Different pressure supply method	4	Different pressure supply method
5	Individual supply/exhaust method	5	Individual supply/exhaust method
6	Rear piping method	6	Rear piping method

PV5G/GMF (DIN terminal box)

How to wire

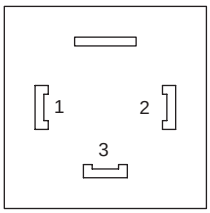

Pin No.	Name
1	a SOL
2	b SOL
3	COM

There is no specification of polarity when using a DC power supply.

Electric connection circuit diagram

Electrical connections (wiring method)				
	Blank	Without energization indicator lamp	N	With surge suppressor and indicator lamp
Single	AC	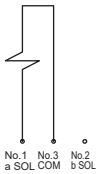	AC	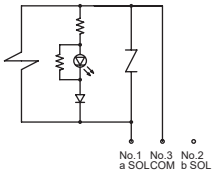
	DC	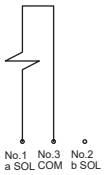	DC	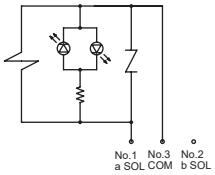
Double	AC	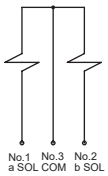	AC	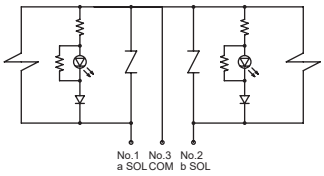
	DC	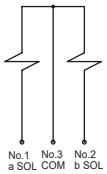	DC	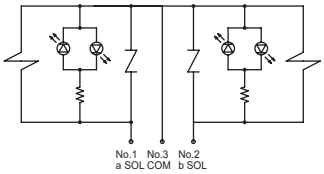

PV5/GMF (I/O connector)

How to wire

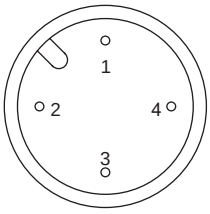

Pin No.	Name
1	COM(NPN)
2	b SOL
3	COM(PNP)
4	a SOL

Pin 2 will not be used when using a single type.

Electric connection circuit diagram

Electrical connections (wiring method)		
Single	DC	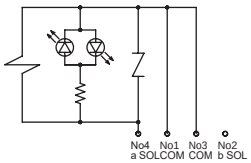
Double	DC	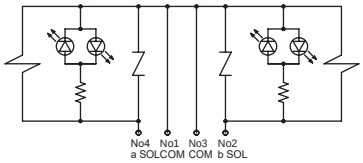

Note: Only available with a rated voltage of 24 VDC and with surge suppressor and indicator lamp.

PV5G/GMF
(DIN terminal box)
Pilot operated 5-port valve
ISO valve

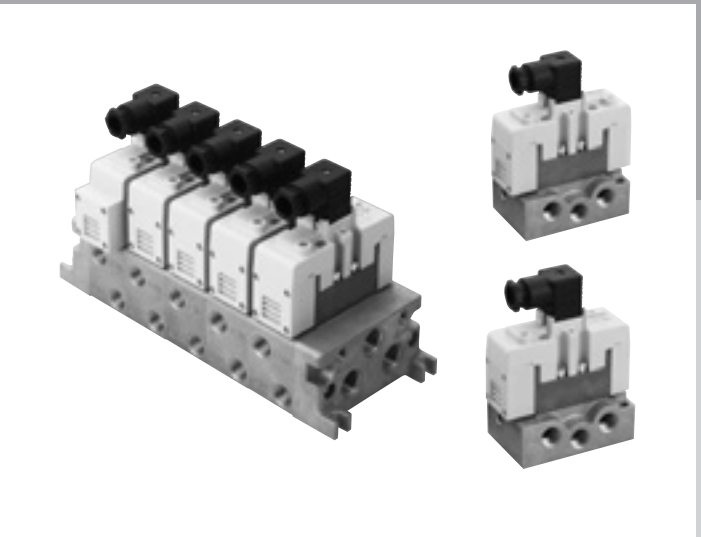

CONTENTS

Discrete valve

- ISO size 1 (PV5G-6) 1472
- ISO size 2 (PV5G-8) 1478

Individual wiring manifold

- ISO size 1 (GMF1) 1484
- ISO size 2 (GMF2) 1488

Mix manifold

- ISO size 1/2 (GMFZ) 1492

Manifold option 1494

Technical data
(1) Manifold 1495

Manifold specifications sheets 1496

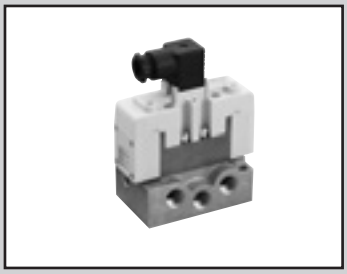

Discrete valve ISO size 1
DIN terminal box
Pilot operated 5-port valve ISO compliant valve

PV5G-6 Series

● Cylinder bore size: max. ø100

CE (applied to DC voltage) RoHS

JIS symbol

● 5-port valve

2-position single (FG-S)

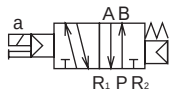

2-position double (FG-D)



3-position all ports closed (FHG)

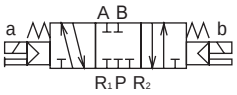

3-position all ports closed Non-leaking (FPG)

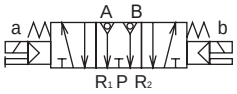

3-position A/B/R connection (FJG)

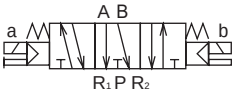

3-position P/A/B connection (FIG)

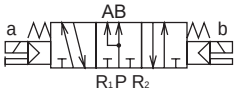

2-position single Exhaust pressurized (YZ-S)

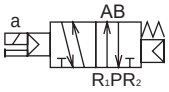

2-position double Exhaust pressurized (YZ-D)



Common specifications

Item	Description
Valve and operation	Pilot operated soft spool valve
Working fluid	Compressed air
Max. working pressure MPa	1.0 (≈150 psi, 10 bar)
Min. working pressure MPa	0.15 (≈22 psi, 1.5 bar) 0.20 (≈29 psi, 2 bar) (3-position) (*1)
Proof pressure MPa	1.50 (≈220 psi, 15 bar)
Ambient temperature °C	-5 (23°F) to 60 (140°F) (no freezing)
Fluid temperature °C	5 (41°F) to 60 (140°F)
Lubrication	Not required
Degree of protection	Dust proof/jet proof (IP65 or equivalent)
Leakage cm^3/min (A, B→R port)	10 (ANR) or less 3-position all ports closed non-leaking type only 0.3 (ANR) or less (*2)
Vibration resistance m/s^2	50 or less
Shock resistance m/s^2	300 or less
Atmosphere	Cannot be used in corrosive gas environment.

*1: With YZ-S only, use with a working pressure of R1 > R2 ≥ 0.15 MPa.
*2: The initial value is listed.

Electrical specifications

Item				Description
Rated voltage	V	AC		100(50/60 Hz) 110(50/60 Hz) 200(50/60 Hz) 220(50/60 Hz)
		DC		12,24
Voltage fluctuation range				±10%
Starting current	A	AC	100 V	0.056/0.044
			110 V	0.051/0.040
			200 V	0.034/0.026
			220 V	0.031/0.024
Holding current	A	AC	100 V	0.028/0.022
			110 V	0.025/0.020
			200 V	0.017/0.013
			220 V	0.015/0.012
		DC	12 V	0.083
			24 V	0.042
Power consumption	W	AC	100 V	1.8/1.4
			110 V	(1.8/1.5)
			200 V	2.1/1.6
			220 V	(2.2/1.7)
Values in ( ) are with lamp		DC	12 V	1(1.2)
			24 V	
Thermal class				B (molded coil)
Wiring method				Electrical plug connector

Performance/characteristics by model

Item			PV5G-6
Port size		(*1)	Rc1/4, Rc3/8
Response time ms (*2)	2-position	Single	30 (ON), 40 (OFF)
		Double	30
	3-position		30 (when ON), 50 (when neutral)

*1: As G and NPT threads can also be used for piping port screws, contact CKD for details.
*2: The response time is the value with a working pressure of 0.5 MPa, no lubrication, and a DC power supply. It depends on the pressure and the lubricant quality.

Weight

Item			PV5G-6
Weight kg (*1)	2-position	Single	0.40
		Double	0.44
	3-position	Other than non-leaking	0.48
		All ports closed non-leaking	1.14

*1: The weight listed is the weight without the sub-plate.

Flow characteristics

Model No.	Port size	Solenoid position	P→A/B		A/B→R1/R2	
			C[dm^3/(s·bar)]	b	C[dm^3/(s·bar)]	b
PV5G-6	Rc1/4	2-position single	6.1	0.28	6.7	0.20
		2-position double	6.1	0.28	6.7	0.20
		3-position all ports closed	5.2	0.32	5.6	0.30
		3-position A/B/R connection	5.1	0.32	6.9	0.16
		3-position P/A/B connection	6.3	0.28	5.9	0.28
		3-position all ports closed non-leaking	3.4	-	3.0	-

*1: Effective cross-sectional area S and sonic conductance C are converted as S ≈ 5.0 x C.

Coolant proof specifications

Can be selected with ”How to order” Item Ⓓ option “A” on page 1474.

CE marking specifications (applies to DC voltage type)

** – **ST**

・Standard voltage of 24 VDC or less is CE marking-compatible even if the model No. is not indicated with "ST".

How to order DIN terminal box

● ISO Size 1

PV5G - 6 - FG-S - 3 - N ( ) - A03

- PV5G: Model No.
- 6: ISO size 1
- FG-S: Ⓐ Solenoid position
- 3: Ⓑ Voltage
- N: Ⓒ Surge suppressor/lamp
- ( ): Ⓓ Option
- A03: Ⓔ With/without sub-plate and port size

Code	Description		Model No. PV5G-6
Ⓐ Solenoid position			
FG-S	P pressurized	2-position single	●
FG-D		2-position double	●
FHG-D		3-position all ports closed	●
FJG-D		3-position ABR connection	●
FIG-D		3-position PAB connection	●
FPG-D		3-position all ports closed non-leaking	●
YZ-S	Exhaust pressurized	2-position single	●
YZ-D		2-position double	●
Ⓑ Voltage			
1	100 VAC		●
2	200 VAC		●
3	24 VDC		●
4	12 VDC		●
5	110 VAC		●
6	220 VAC		●
Ⓒ Surge suppressor/lamp			
Blank	None		●
N	With surge suppressor/lamp (*1)		●
Ⓓ Option			
Blank	None		●
A	Coolant proof		●
Ⓔ With/without sub-plate and port size			
Blank	Without sub-plate		●
A02	Side piping (Rc1/4 (Rc3/8 for R port only))		●
A03	Side piping (Rc3/8)		●

⚠ Precautions for model No. selection

*1: Refer to page 1470 for the circuit diagram with a surge suppressor/lamp.

[Example of model No.]

PV5G-6-FG-S-3-N-A03

Model: PV5G/ISO size 1 (DIN terminal box)

- Ⓐ Solenoid position : P pressurized type 2-position Single solenoid
- Ⓑ Voltage : 24 VDC
- Ⓒ Surge suppressor/indicator lamp : With surge suppressor and indicator lamp
- Ⓓ Option : None
- Ⓔ Sub-plate port size : Side piping (Rc3/8)

ISO size 1 sub-plate specifications and how to order

CB1 - A02

- A02: Ⓐ Piping connection method

Code	Type	P/A/B port	R1/R2 port	Weight (kg)
Ⓐ Piping connection method				
A02	Side piping	Rc1/4	Rc3/8	0.27
A03		Rc3/8		

Internal structure and parts list: DIN terminal box

PV5G-6-FG-S
● 2-position single



PV5G-6-YZ-S
● 2-position single
Exhaust pressurized

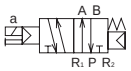

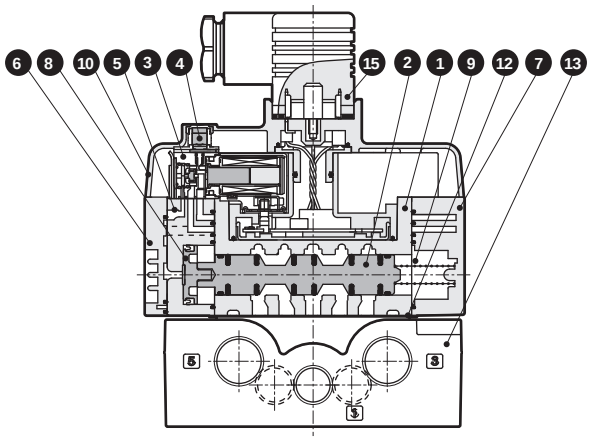

PV5G-6-FG-D
● 2-position double



PV5G-6-YZ-D
● 2-position double
Exhaust pressurized



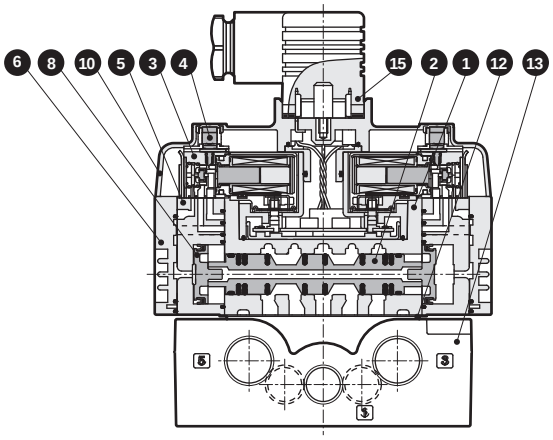

PV5G-6-FHG-D
● 3-position all ports closed



PV5G-6-FJG-D
● 3-position A/B/R connection

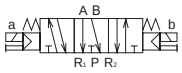

PV5G-6-FIG-D
● 3-position P/A/B connection



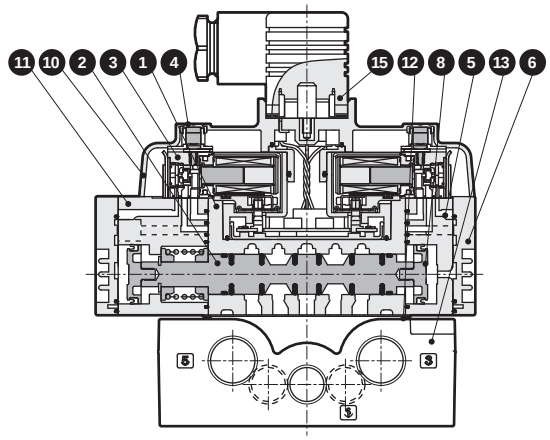

PV5G-6-FPG-D
● 3-position all ports closed
Non-leaking type

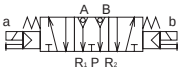

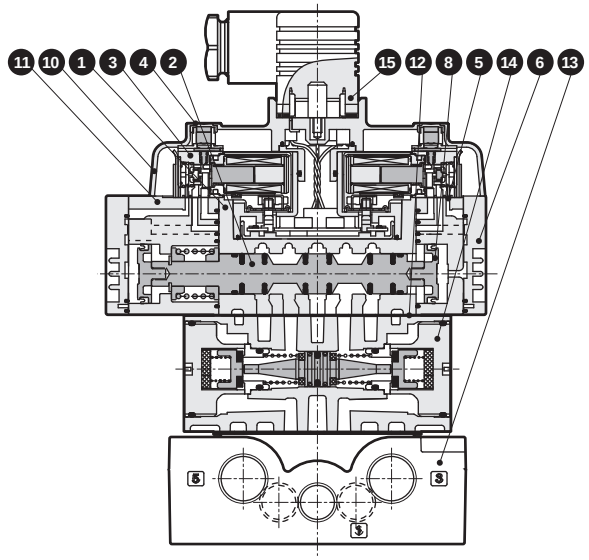

Main parts list

No.	Part name	Material	No.	Part name	Material
1	Body	Aluminum alloy die-casting	9	Spring S	-
2	Spool assembly	-	10	Wiring cover	Resin
3	Pilot valve	-	11	Pilot valve assembly for 3-position	Resin
4	Manual override	-	12	Gasket	-
5	Pilot valve assembly for double	Resin	13	Sub-plate	Aluminum alloy die-casting
6	Cap D	Resin	14	Air pilot check valve	-
7	Cap S	Resin	15	DIN terminal box	-
8	Piston D assembly	-			

Dimensions: DIN terminal box (out sub-plate)

PV5G-6-FG-S-*
PV5G-6-YZ-S-*

● 2-position single

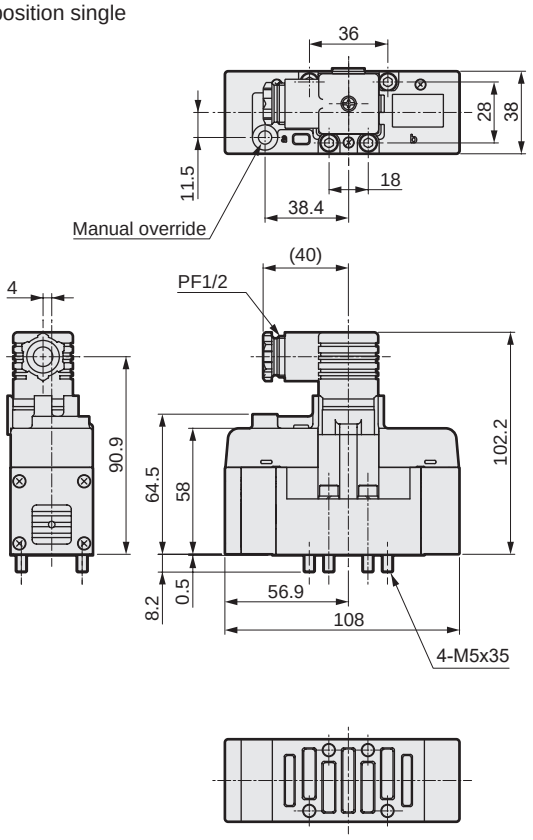

PV5G-6-FG-D-*
PV5G-6-YZ-D-*

● 2-position double

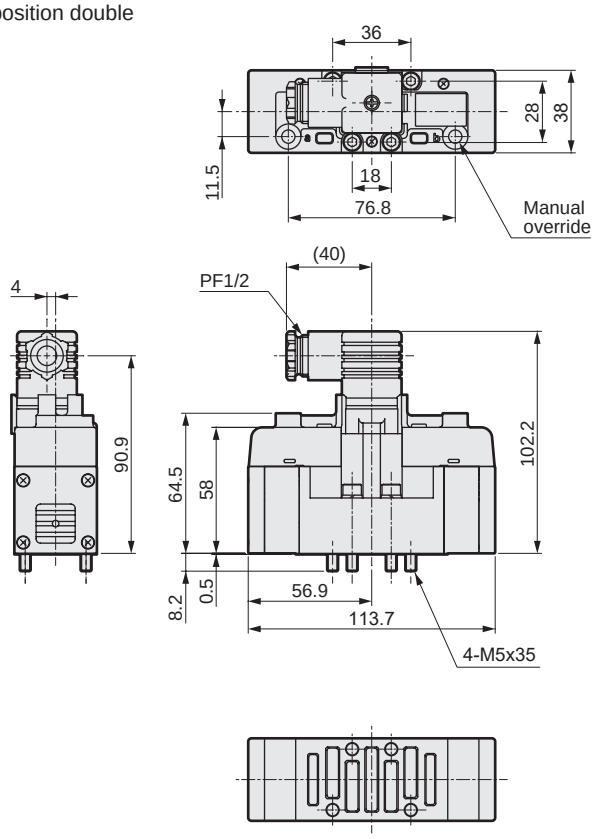

PV5G-6-FHG-D-*
PV5G-6-FJG-D-*
PV5G-6-FIG-D-*

● 3-position

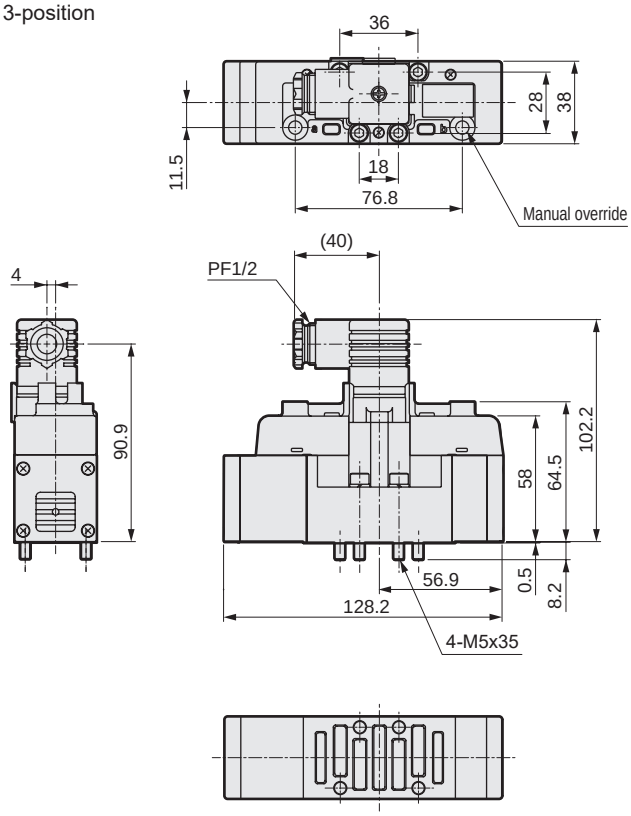

PV5G-6-FPG-D-*

● 3-position/non-leaking

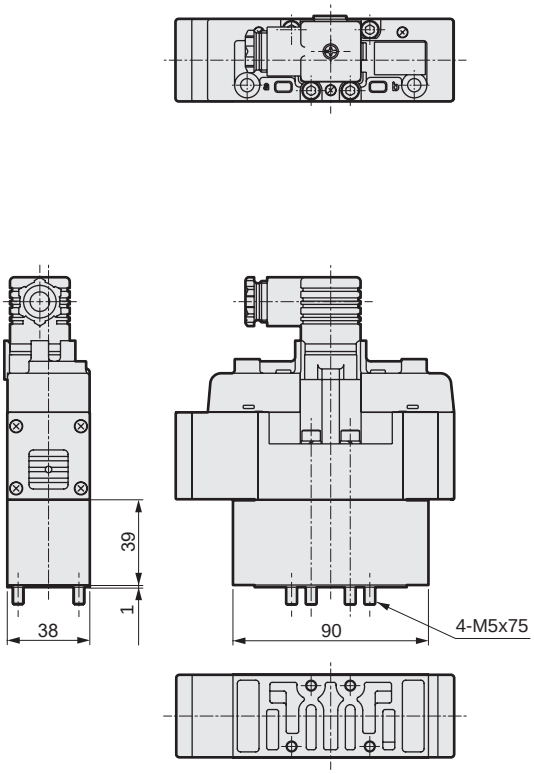

Dimensions: DIN terminal box (with sub-plate)

PV5G-6-FG-S-*-*
PV5G-6-YZ-S-*-*

● 2-position single

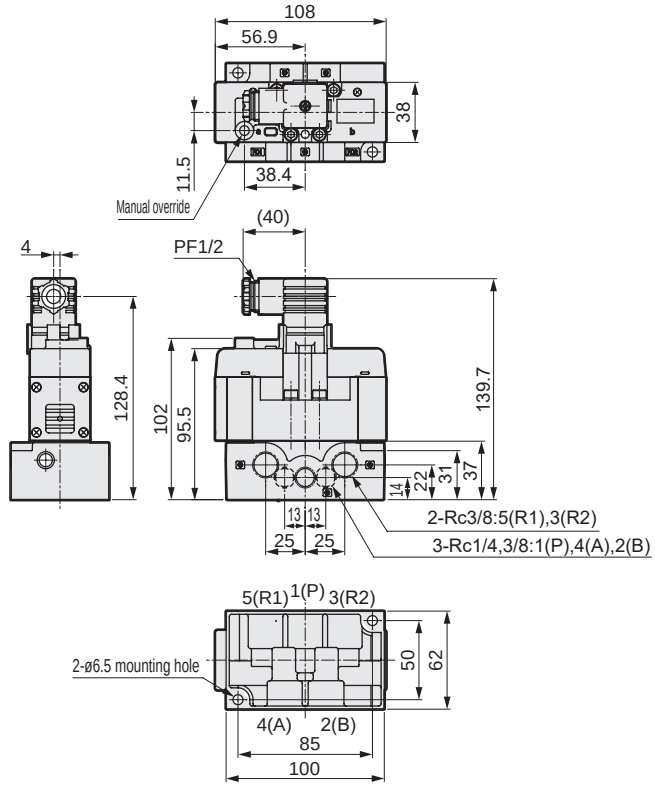

PV5G-6-FG-D-*-*
PV5G-6-YZ-D-*-*

● 2-position double

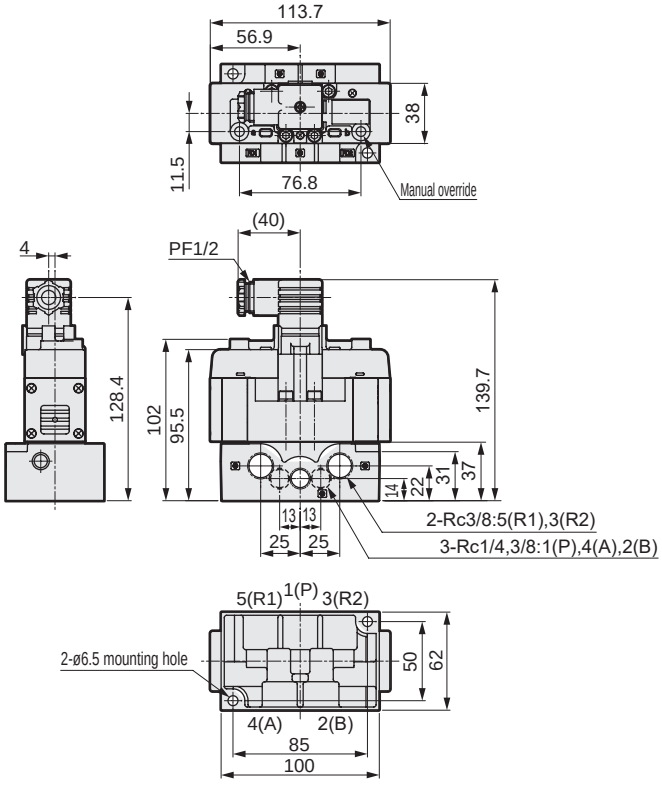

PV5G-6-FHG-D-*-*
PV5G-6-FJG-D-*-*
PV5G-6-FIG-D-*-*

● 3-position

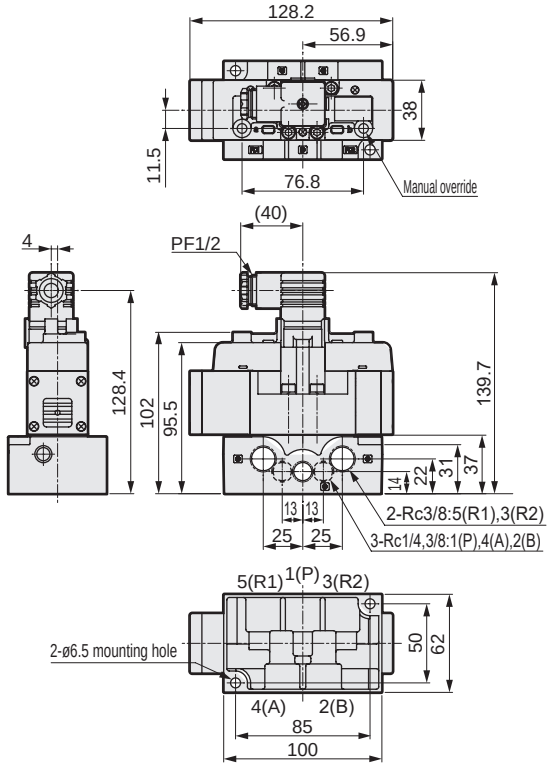

● Sub-plate dimensions

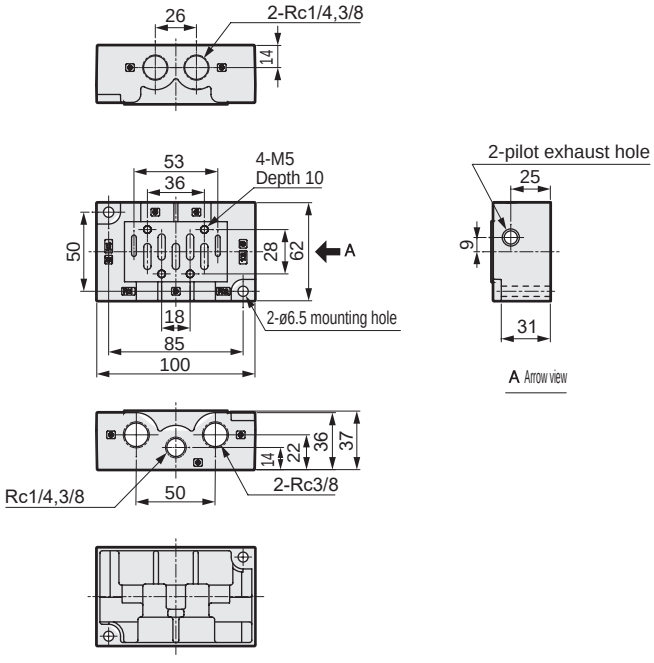

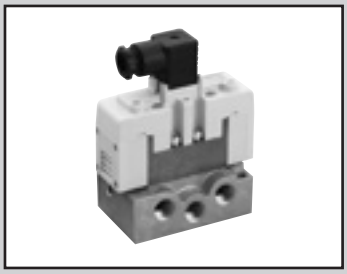

Discrete valve ISO size 2
DIN terminal box
Pilot operated 5-port valve ISO compliant valve

PV5G-8 Series

● Cylinder bore size: max. ø160

CE (applied to DC voltage type) RoHS

JIS symbol

● 5-port valve

2-position single (FG-S)

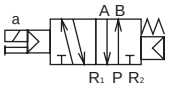

2-position double (FG-D)



3-position all ports closed (FHG)



3-position all ports closed Non-leaking (FPG)

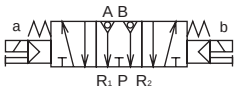

3-position A/B/R connection (FJG)

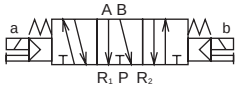

3-position P/A/B connection (FIG)



2-position single Exhaust pressurized (YZ-S)

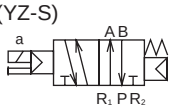

2-position double Exhaust pressurized (YZ-D)

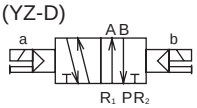

Common specifications

Item	Description
Valve and operation	Pilot operated soft spool valve
Working fluid	Compressed air
Max. working pressure MPa	1.0
Min. working pressure MPa	0.15 0.20 (3-position) (*1)
Proof pressure MPa	1.50
Ambient temperature °C	-5 to 60 (no freezing)
Fluid temperature °C	5 to 60
Lubrication	Not required
Degree of protection	Dust proof/jet proof (IP65 or equivalent)
Leakage cm^3/min (A, B→R port)	10 (ANR) or less 3-position all ports closed non-leaking only 0.3 (ANR) or less (*2)
Vibration resistance m/s^2	50 or less
Shock resistance m/s^2	300 or less
Atmosphere	Cannot be used in corrosive gas environment.

*1: With YZ-S only, use the unit with a working pressure of R1 > R2 ≥ 0.15 MPa.
*2: The initial value is listed.

Electrical specifications

Item				Description
Rated voltage	V	AC		100(50/60 Hz) 110(50/60 Hz) 200(50/60 Hz) 220(50/60 Hz)
		DC		12,24
Voltage fluctuation range				±10%
Starting current	A	AC	100 V	0.056/0.044
			110 V	0.051/0.040
			200 V	0.034/0.026
			220 V	0.031/0.024
Holding current	A	AC	100 V	0.028/0.022
			110 V	0.025/0.020
			200 V	0.017/0.013
			220 V	0.015/0.012
		DC	12 V	0.083
			24 V	0.042
Power consumption	W	AC	100 V	1.8/1.4
			110 V	(1.8/1.5)
			200 V	2.1/1.6
			220 V	(2.2/1.7)
Values in ( ) are with lamp		DC	12 V	1(1.2)
			24 V	
Thermal class				B (molded coil)
Wiring method				Electrical plug connector

Performance/characteristics by model

Item			PV5G-8
Port size		(*1)	Rc3/8, Rc1/2, Rc3/4
Response time ms (*2)	2-position	Single	40 (ON), 60 (OFF)
		Double	40
	3-position		40 (when ON), 60 (when neutral)

*1: As G and NPT threads can also be used for piping port screws, contact CKD for details.
*2: The response time is the value with a working pressure of 0.5 MPa, no lubrication, and a DC power supply. It depends on the pressure and the lubricant quality.

Weight

Item			PV5G-8
Weight kg (*1)	2-position	Single	0.63
		Double	0.67
	3-position	Other than non-leaking	0.70
		All ports closed non-leaking type	1.35

*1: The weight listed is the weight without the sub-plate.

Flow characteristics

Model No.	Port size	Solenoid position	P→A/B		A/B→R1/R2	
			C[dm³/(s·bar)]	b	C[dm³/(s·bar)]	b
PV5G-8	Rc3/8	2-position single	10.7	0.17	13.0	0.19
		2-position double	10.7	0.17	13.0	0.19
		3-position all ports closed	10.0	0.16	11.0	0.25
		3-position A/B/R connection	9.9	0.14	13.0	0.16
		3-position P/A/B connection	11.0	0.12	12.0	0.21
		3-position all ports closed non-leaking	6.6	-	6.2	-

*1: Effective cross-sectional area S and sonic conductance C are converted as S ≈ 5.0 x C.

Coolant proof specifications

Select the option “A” of item Ⓓ in How to order on page 1480.

CE marking specifications

** – ST

• Standard voltage of 24 VDC or less is CE marking-compatible even if the model No. is not indicated with "ST".

How to order DIN terminal box

● ISO size 2

PV5G - 8 - FG-S - 3 - N ○ - A03

- PV5G: Model No.
- 8: ISO size 2
- Ⓐ FG-S: Solenoid position
- Ⓑ 3: Voltage
- Ⓒ N: Surge suppressor/lamp
- Ⓓ ○: Option
- Ⓔ A03: With/without sub-plate and port size

Code	Description		Model No. PV5G-8
Ⓐ Solenoid position			
FG-S	P pressurized	2-position single	●
FG-D		2-position double	●
FHG-D		3-position all ports closed	●
FJG-D		3-position ABR connection	●
FIG-D		3-position PAB connection	●
FPG-D		3-position all ports closed non-leaking	●
YZ-S	Exhaust pressurized	2-position single	●
YZ-D		2-position double	●
Ⓑ Voltage			
1	100 VAC		●
2	200 VAC		●
3	24 VDC		●
4	12 VDC		●
5	110 VAC		●
6	220 VAC		●
Ⓒ Surge suppressor/lamp			
Blank	None		●
N	With surge suppressor/lamp (*1)		●
Ⓓ Option			
Blank	None		●
A	Coolant proof		●
Ⓔ With/without sub-plate and port size			
Blank	Without sub-plate		●
A03	Side piping Rc3/8 (Rc1/2 for R port only)		●
A04	Side piping (Rc1/2)		●
A06	Side piping (Rc3/4)		●

⚠ Precautions for model No. selection

*1: Refer to page 1470 for the circuit diagram with a surge suppressor/lamp.

[Example of model No.]

PV5G-8-FG-S-3-N-A03

Model: PV5G/ISO size 2 (DIN terminal box)

- Ⓐ Solenoid position : P pressurized 2-position Single solenoid
- Ⓑ Voltage : 24 VDC
- Ⓒ Surge suppressor/lamp : With surge suppressor and indicator lamp
- Ⓓ Option : None
- Ⓔ Sub-plate port size : Side piping (Rc3/8) R port Rc1/2

ISO size 2 sub-plate specifications and how to order

CB2 - A03

- CB2: Ⓐ Piping connection method

Code	Type	P/A/B port	R1/R2 port	Weight (kg)
Ⓐ Piping connection method				
A03	Side piping	Rc3/8	Rc1/2	0.49
A04		Rc1/2		
A06		Rc3/4	Rc3/4	1.40

Internal structure and parts list: DIN terminal box

PV5G-8-FG-S
● 2-position single



PV5G-8-FG-D
● 2-position double



PV5G-8-YZ-S
● 2-position single
Exhaust pressurized



PV5G-8-YZ-D
● 2-position double
Exhaust pressurized

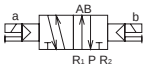

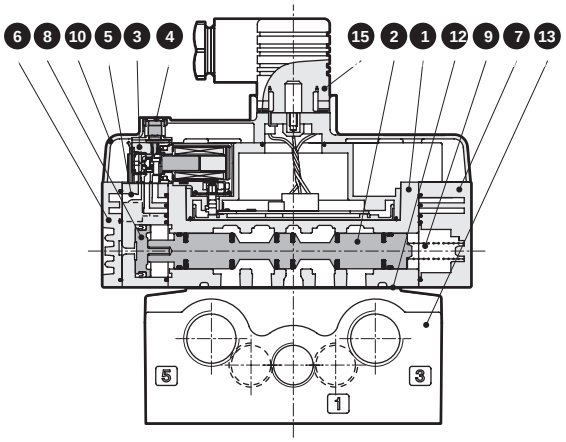

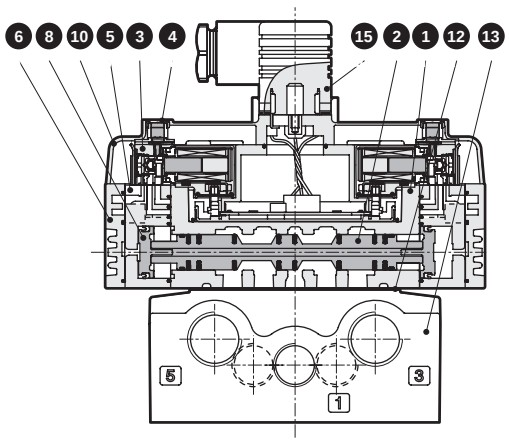

PV5G-8-FHG-D
● 3-position all ports closed

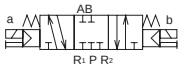

PV5G-8-FPG-D
● 3-position all ports closed
non-leaking

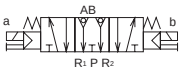

PV5G-8-FJG-D
● 3-position A/B/R connection



PV5G-8-FIG-D
● 3-position P/A/B connection



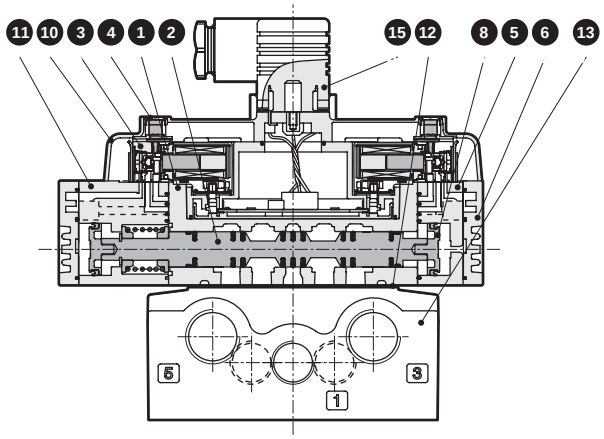

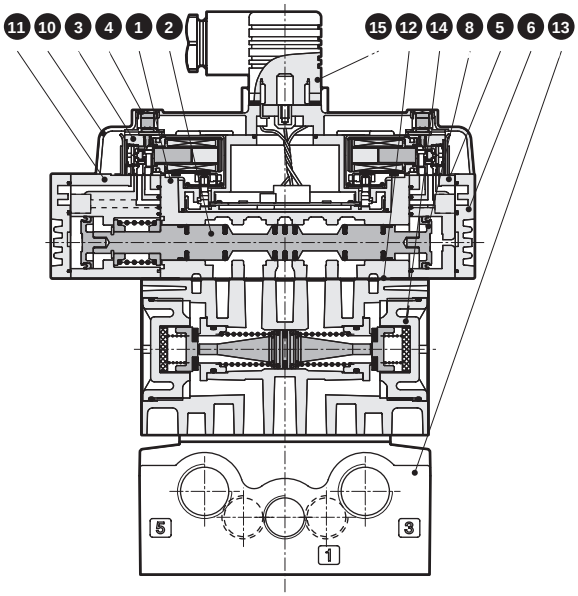

Main parts list

No.	Part name	Material	No.	Part name	Material
1	Body	Aluminum alloy die-casting	9	Spring S	-
2	Spool assembly	-	10	Wiring cover	Resin
3	Pilot valve	-	11	Pilot valve assembly for 3-position	Resin
4	Manual override	-	12	Gasket	-
5	Pilot valve assembly for double	Resin	13	Sub-plate	Aluminum alloy die-casting
6	Cap D	Resin	14	Air pilot check valve	-
7	Cap S	Resin	15	DIN terminal box	-
8	Piston D assembly	-			

Dimensions: DIN terminal box (without sub-plate)

PV5G-8-FG-S-*
PV5G-8-YZ-S-*

● 2-position single

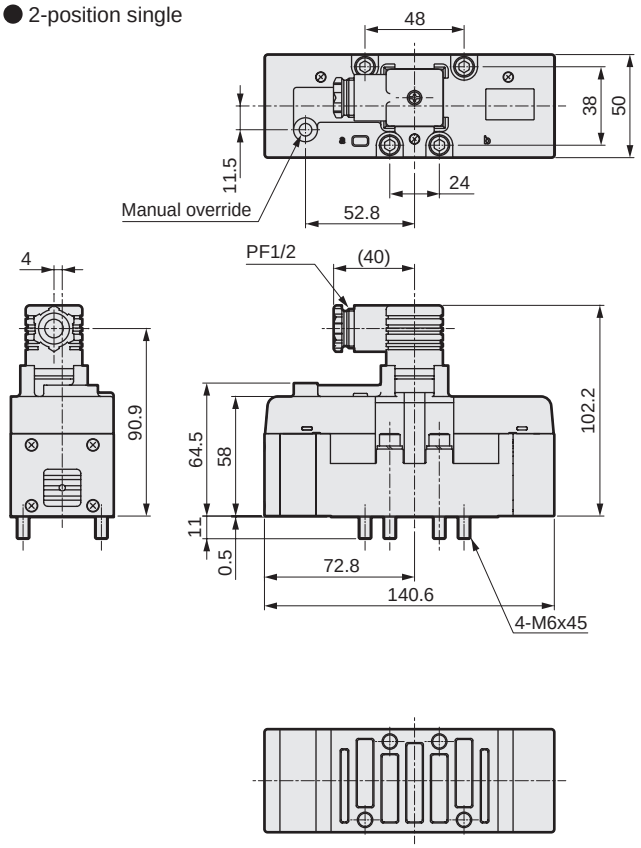

PV5G-8-FG-D-*
PV5G-8-YZ-D-*

● 2-position double

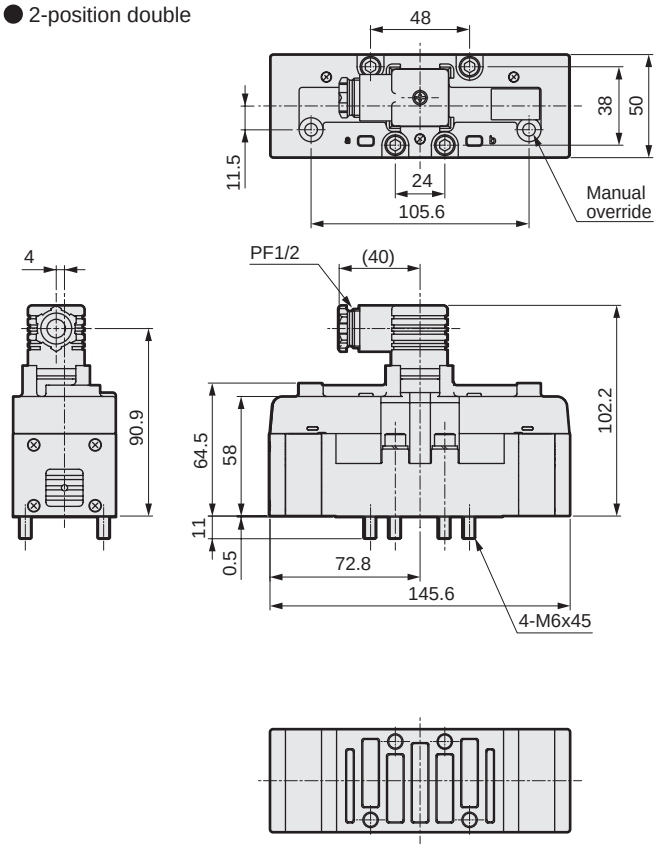

PV5G-8-FHG-D-*
PV5G-8-FJG-D-*
PV5G-8-FIG-D-*

● 3-position

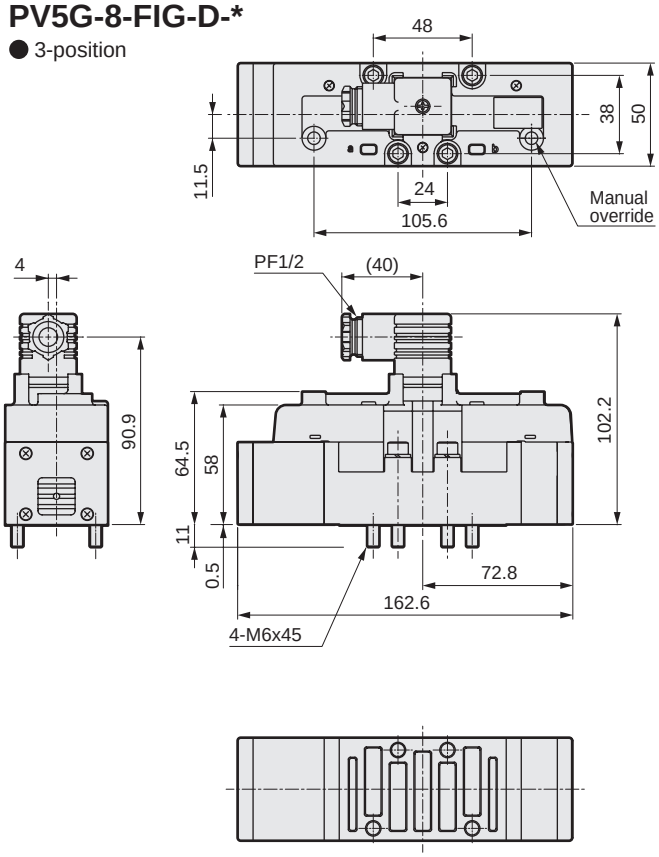

PV5G-8-FPG-D-*

● 3-position/non-leaking

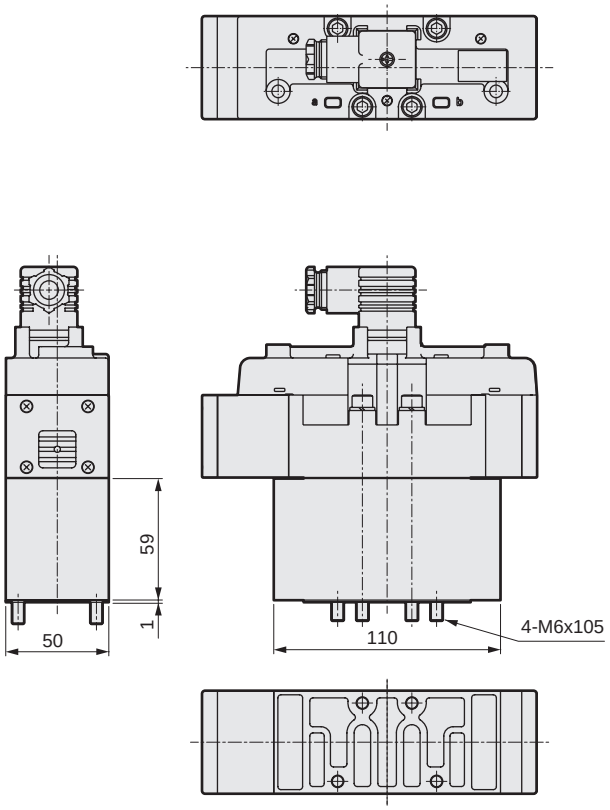

Dimensions: DIN terminal box (with sub-plate)

PV5G-8-FG-S-*-*
PV5G-8-YZ-S-*-*

● 2-position single

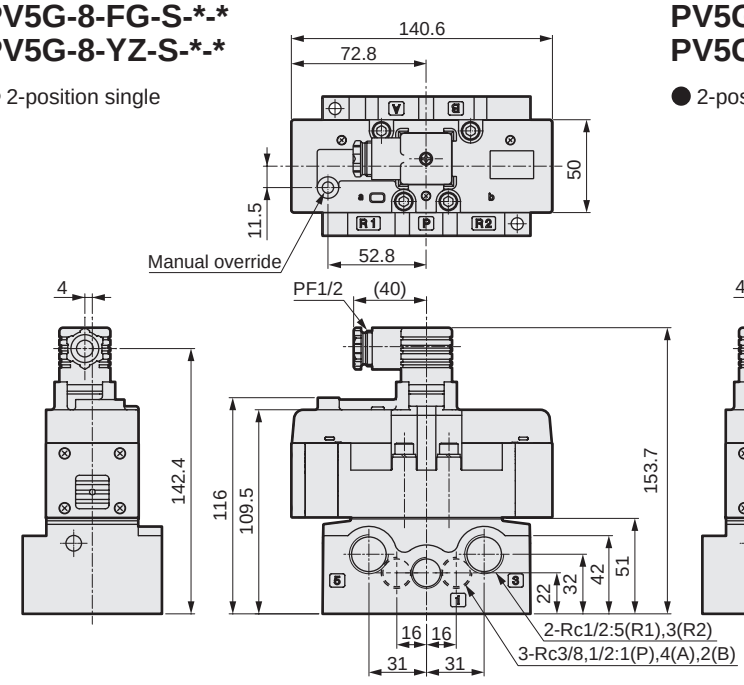

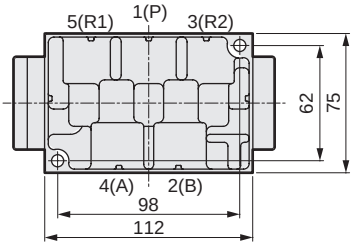

(Note: Refer to the following table for CB2-A06 dimensions.)

PV5G-8-FG-D-*-*
PV5G-8-YZ-D-*-*

● 2-position double

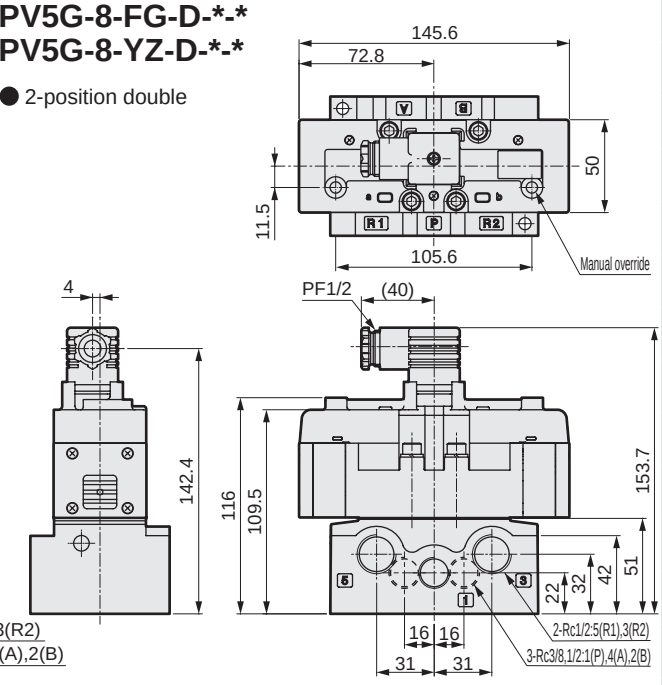

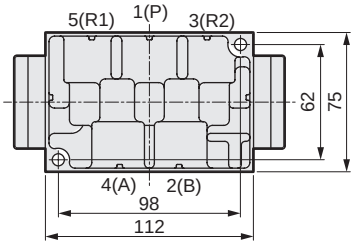

(Note: Refer to the following table for CB2-A06 dimensions.)

PV5G-8-FHG-D-*-*
PV5G-8-FJG-D-*-*
PV5G-8-FIG-D-*-*

● 3-position

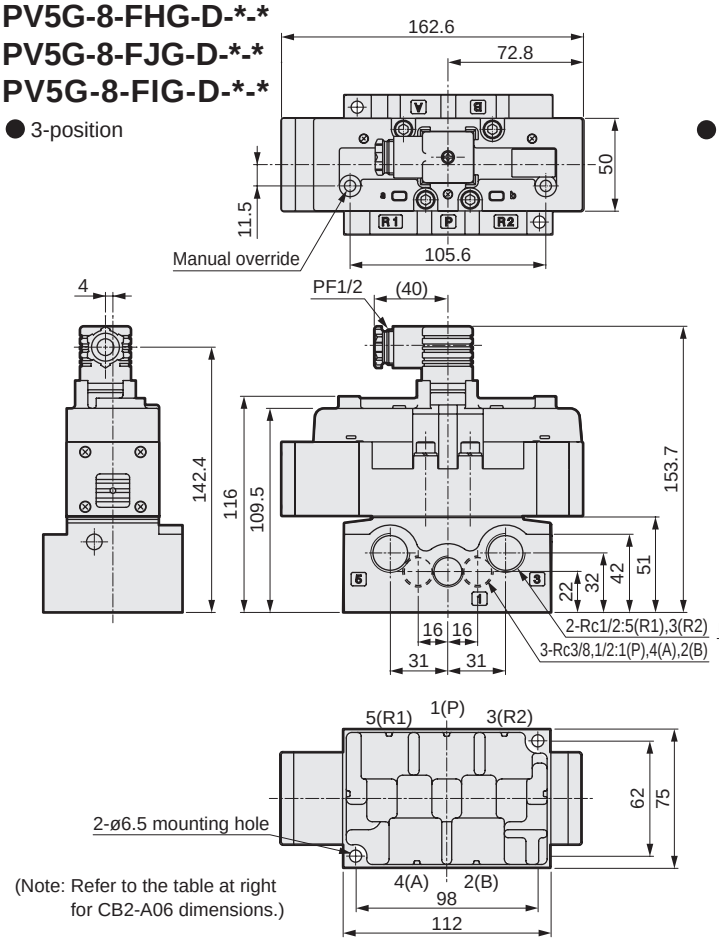

(Note: Refer to the table at right for CB2-A06 dimensions.)

● Sub-plate dimensions (CB2-*)

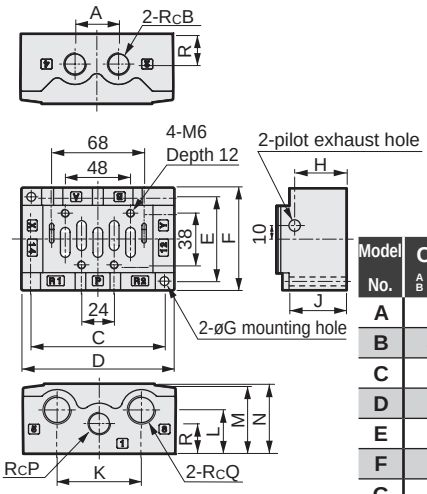

Model No.	CB2- A/B 03	CB2- A/B 04	CB2 A/B 06
A	32		40
B	3/8	1/2	3/4
C	98		128
D	112		142
E	62		72
F	75		86
G	6.5		7.5
H	38		53
J	42		55
K	62		84
L	32		42
M	50		62
N	51		63
P	3/8	1/2	3/4
Q	1/2		3/4
R	22		30

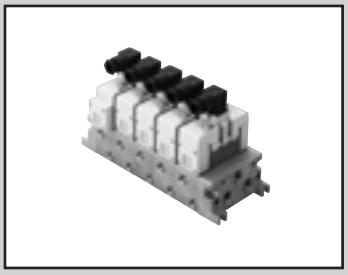

Individual wiring manifold ISO size 1
DIN terminal box
Pilot operated 5-port valve ISO compliant valve

GMF1 Series

● Cylinder bore size: max. ø100

RoHS

Common specifications

Item	Description
Manifold method	Manifold integrated
Manifold	Common supply/common exhaust Common supply/individual exhaust Individual supply/common exhaust Individual supply/individual exhaust Different pressure supply
Station No.	1 to 10 stations
Valve and operation	Pilot operated soft spool valve
Working fluid	Compressed air
Max. working pressure MPa	1.0 (≈150 psi, 10 bar)
Min. working pressure MPa	0.15 (≈22 psi, 1.5 bar) 0.20 (≈29 psi, 2 bar) (3-position) (*1)
Proof pressure MPa	1.50 (≈220 psi, 15 bar)
Ambient temperature °C	-5 (23°F) to 60 (140°F) (no freezing)
Fluid temperature °C	5 (41°F) to 60 (140°F)
Lubrication	Not required
Degree of protection	Dust proof/jet proof (IP65 or equivalent)
Leakage (A, B→R port) cm^3/min	10 (ANR) or less 3-position all ports closed non-leaking only 0.3 (ANR) or less (*2)
Vibration resistance m/s^2	50 or less
Shock resistance m/s^2	300 or less
Atmosphere	Cannot be used in corrosive gas environment.

*1: With YZ-S only, use with a working pressure of R1 > R2 ≥ 0.15 MPa.
*2: The initial value is listed.

Electrical specifications

Item			Description
Rated voltage V	AC		100(50/60 Hz) 110(50/60 Hz) 200(50/60 Hz) 220(50/60 Hz)
	DC		12,24
Voltage fluctuation range			±10%
Starting current A	AC	100 V	0.056/0.044
		110 V	0.051/0.040
		200 V	0.034/0.026
		220 V	0.031/0.024
Holding current A	AC	100 V	0.028/0.022
		110 V	0.025/0.020
		200 V	0.017/0.013
		220 V	0.015/0.012
	DC	12 V	0.083
		24 V	0.042
Power consumption W	AC	100 V	1.8/1.4
		110 V	(1.8/1.5)
		200 V	2.1/1.6
		220 V	(2.2/1.7)
Values in ( ) are with lamp	DC	12 V	1(1.2)
		24 V	
Thermal class			B (molded coil)
Wiring method			Electrical plug connector

Individual specifications

Item		GMF1
Port size	P/R1/R2 port	Rc3/8, Rc1/2
(*1)	A/B port	Rc1/4, Rc3/8

*1: As G and NPT threads can also be used for piping port screws, contact CKD for details.

Performance/Characteristics

Item			GMF1
Response time (*2) ms	2-position	Single	30 (ON), 40 (OFF)
		Double	30
	3-position		30 (when ON), 50 (when neutral)

*2: The response time is the value with a working pressure of 0.5 MPa, no lubrication, and a DC power supply.
It depends on the pressure and the lubricant quality.

Weight

Manifold base	Station No.	1	2	3	4	5	6	7	8	9	10
(kg)		1.04	1.50	1.95	2.40	2.85	3.30	3.75	4.20	4.65	5.10
Silencer box	Model No.	SB									
Added to manifold base assembly (kg)		0.13									
Spacer	Model No.	P		R		SR		PC			
(kg)		0.22		0.22		0.64		0.25			

Flow characteristics

Model No.	Port size	Solenoid position	P→A/B		A/B→R1/R2	
			C[dm^3/(s·bar)]	b	C[dm^3/(s·bar)]	b
GMF1	Rc1/4	2-position single	4.8	0.25	5.2	0.26
		2-position double	4.8	0.25	5.2	0.26
		3-position all ports closed	4.4	0.27	4.7	0.27
		3-position A/B/R connection	4.4	0.25	5.3	0.25
		3-position P/A/B connection	4.8	0.27	4.7	0.27
		3-position all ports closed non-leaking	3.2	-	2.8	-

*1: Effective cross-sectional area S and sonic conductance C are converted as S ≈ 5.0 x C.

How to order DIN terminal box

● ISO Size 1

GMF1 5 - 02 L - HY1 B DU - SB F - ○ ○

Model No.
Ⓐ Station No.
Ⓑ A/B port size (*1)
Ⓒ A/B port position (*2)
Ⓓ P/R port size
Ⓔ P/R port position (*3) (*4)
Ⓕ HY configuration
Ⓖ Silencer box
Ⓗ Option

Quantity of port size 02 of A/B port
Quantity of port size 03 of A/B port

Code	Description	Model No. GMF1
Ⓐ Station No.		
1	1 station	●
to	to	
10	10 stations	
Ⓑ A/B port size		
02	Rc 1/4	●
03	Rc 3/8	●
HX1	Rc 1/4 and Rc 3/8 mixture	●
Ⓒ A/B port position		
Blank	Right	●
L	Left and right sides (select position with manifold specifications)	●
H	Left	●
Z	Rear side	●
T	Free selection (plug attached) (rear side not available)	●
Ⓓ P/R port size		
03	Rc3/8	●
04	Rc1/2	●
HY1	Rc3/8 and Rc1/2 mixture	●
Ⓔ P/R port position		
B	Top and bottom sides	●
D	Bottom side	●
U	Top side	●
E	P on top, R on bottom	●
F	P on bottom, R on top	●
T	Free selection (plug attached)	●
Ⓕ HY configuration		
Blank	When other than HY1 is selected with Ⓓ	●
DU	Rc 3/8 on bottom, Rc 1/2 on top	●
UD	Rc 3/8 on top, Rc 1/2 on bottom	●
Ⓖ Silencer box		
Blank	None	●
SB	Yes (D side installation)	●
Ⓗ Option		
Blank	None	●
F	P/A/B port filter integrated	●

⚠ Precautions for model No. selection

*1: HX is a mixture of bore sizes. Contact CKD for details.
*2: The instructions of Ⓒ indicate the port positions. Those other than the instructions will all be plugs.
*3: The instructions of Ⓔ indicate the port positions. The opposite side of the instructions will be plugs.
*4: When Ⓖ is with silencer box, this will be position selection for the P-port which can be selected from B, D, U, and T.
The R port is assembled with a plug for both the top and bottom.

[Example of model No.]

GMF15-02L-HY1BDU-SBF

Model: Manifold ISO size 1

Ⓐ Station No. : 5 stations
Ⓑ Ⓒ A/B port : Rc1/4 (left and right both sides piping)
Ⓓ Ⓔ Ⓕ P/R port : Rc3/8 and Rc1/2 mixture (Rc3/8 for bottom side piping and Rc1/2 for top side piping)
Ⓖ Silencer box : Yes (D side installation)
Ⓗ Option : P/A/B-port filter integrated

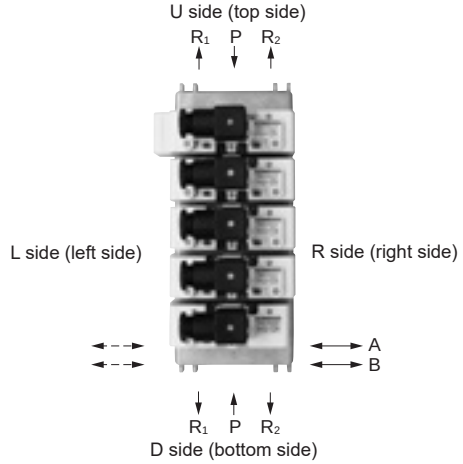

The valve body must be prepared separately. For how to order valves, refer to page 1474. For arrangement of manifolds with valve bodies, **the manifold specifications sheet** on page 1496 **will be necessary** in addition to each model No.

Dimensions: DIN terminal box

GMF1

● Common exhaust

P/R port size	A	B
Rc 3/8	18.4	23.5
Rc 1/2	22.4	22.5

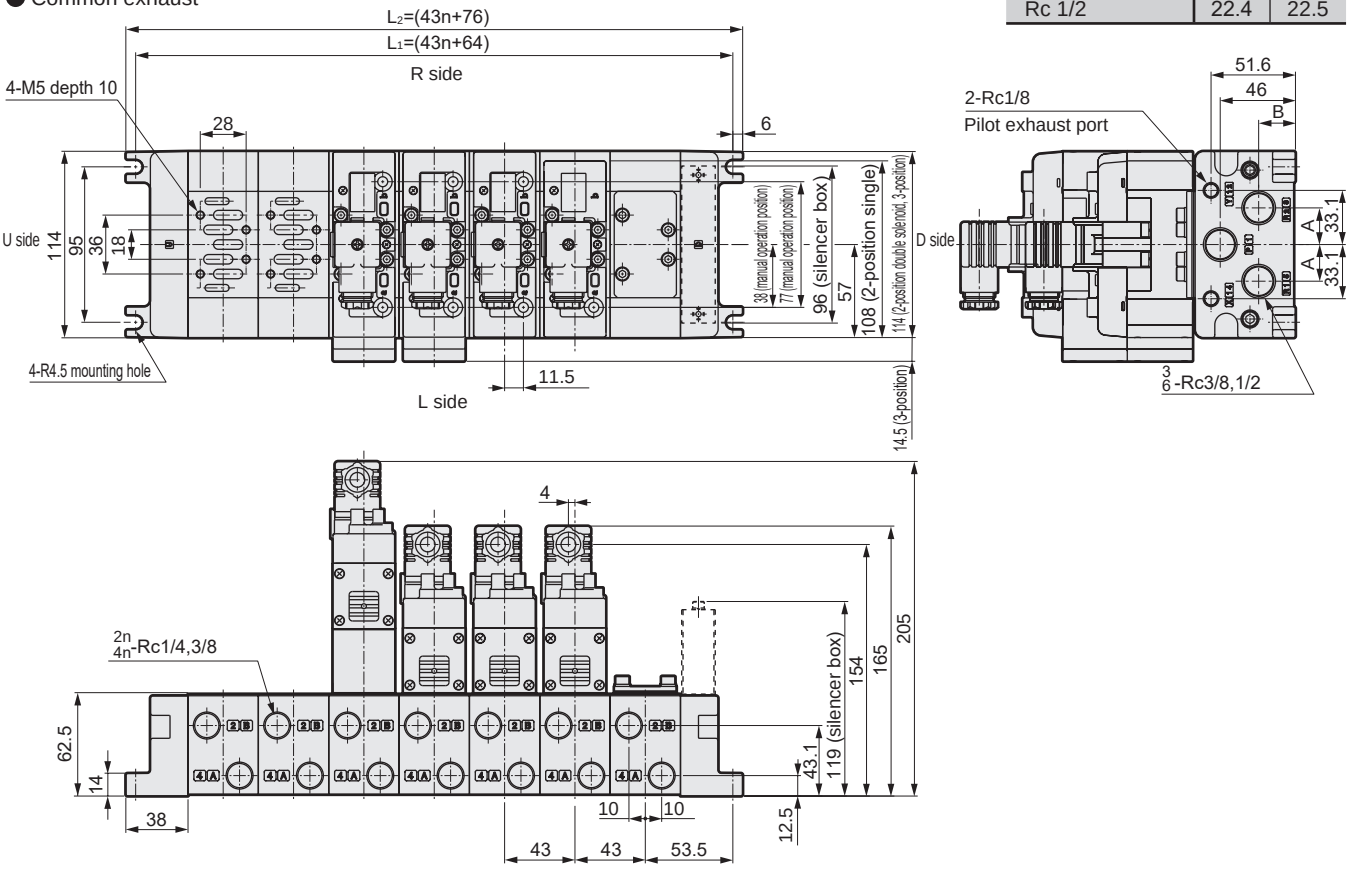

GMF1

● Individual exhaust

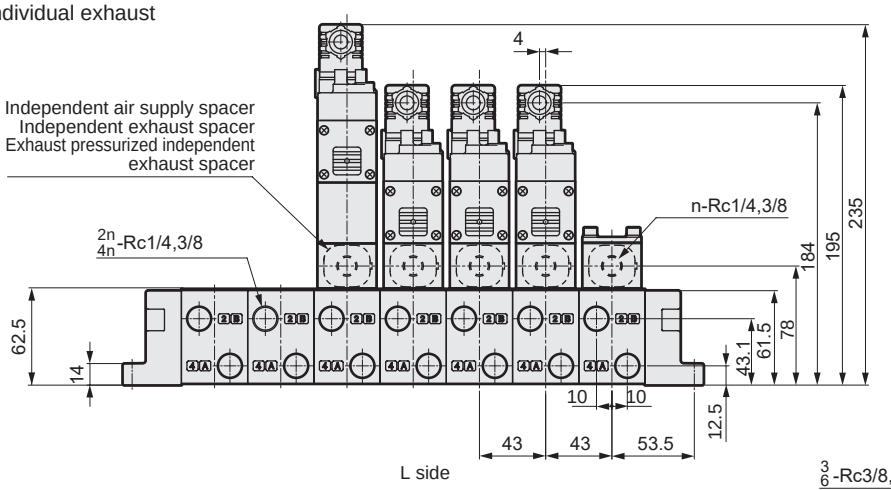

GMF1

● Rear piping

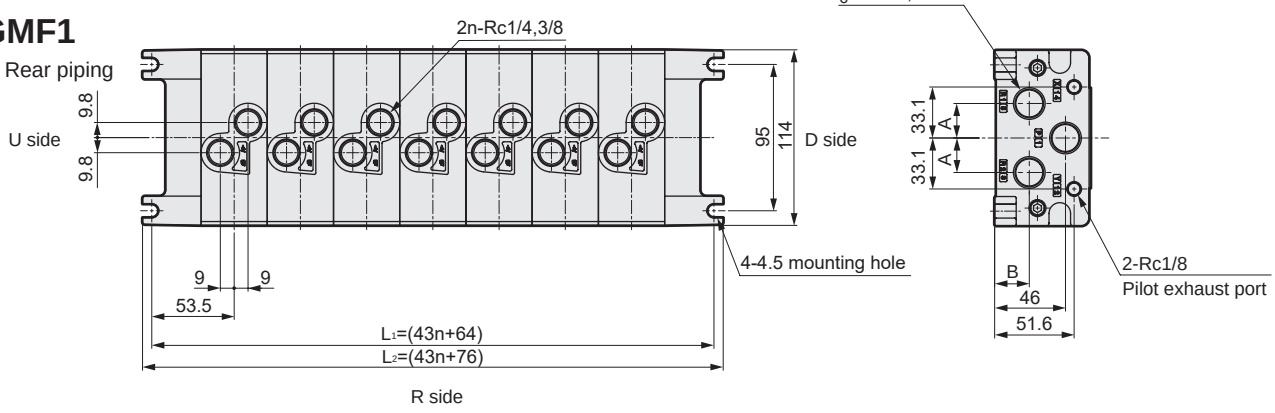

How to order

● Spacer regulator

CMF 1 - SR - A - T05 C

Ⓐ Size	
1	ISO size 1

Ⓑ Press reduction port position	
P	P port
A	A port
B	B port

Ⓒ Pressure gauge	
T05	MPa display (With limit marker)

Ⓓ Check valve	
Blank	None
C	Yes

List without check valve (blank) for SR-P and list with check valve (C) for SR-A and SR-B.

* Note that the direction of the pressure gauge is different with **CMF1-SR-A-T05C**.

CMF1-SR-P-T05
CMF1-SR-B-T05C

● Spacer regulator

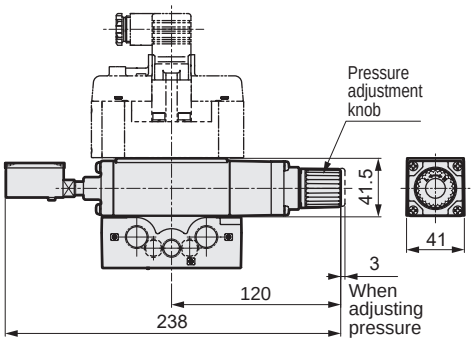

● JIS symbol

CMF1-SR-P-T05

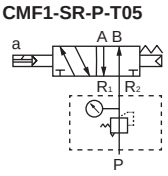

CMF1-SR-B-T05C

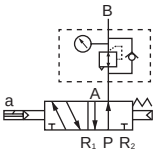

CMF1-SR-A-T05C

● JIS symbol

CMF1-SR-A-T05C

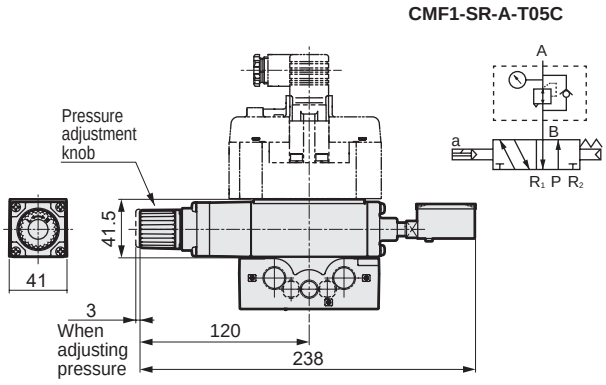

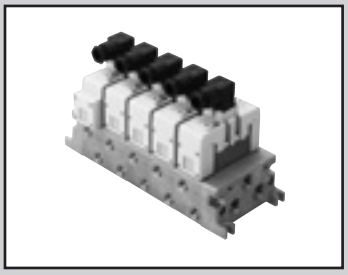

Individual wiring manifold ISO size 2
DIN terminal box
Pilot operated 5-port ISO valve

GMF2 Series

● Cylinder bore size: max. ø160

RoHS

Common specifications

Item	Description
Manifold method	Manifold integrated
Manifold	Common supply/common exhaust Common supply/individual exhaust Individual supply/common exhaust Individual supply/individual exhaust Different pressure supply
Station No.	1 to 10 stations
Valve and operation	Pilot operated soft spool valve
Working fluid	Compressed air
Max. working pressure MPa	1.0 (≈150 psi, 10 bar)
Min. working pressure MPa	0.15 (≈22 psi, 1.5 bar) 0.20 (≈29 psi, 2 bar) (3-position) (*1)
Proof pressure MPa	1.50 (≈220 psi, 15 bar)
Ambient temperature °C	-5 (23°F) to 60 (140°F) (no freezing)
Fluid temperature °C	5 (41°F) to 60 (140°F)
Lubrication	Not required
Degree of protection	Dust proof/jet proof (IP65 or equivalent)
Leakage cm^3/min (A, B→R port)	10 (ANR) or less 3-position all ports closed non-leaking only 0.3 (ANR) or less (*2)
Vibration resistance m/s^2	50 or less
Shock resistance m/s^2	300 or less
Atmosphere	Cannot be used in corrosive gas environment.

*1: With YZ-S only, use with a working pressure of R1 > R2 ≥ 0.15 MPa.
*2: The initial value is listed.

Electrical specifications

Item				Description
Rated voltage	V	AC		100(50/60 Hz) 110(50/60 Hz) 200(50/60 Hz) 220(50/60 Hz)
		DC		12,24
Voltage fluctuation range				±10%
Starting current	A	AC	100 V	0.056/0.044
			110 V	0.051/0.040
			200 V	0.034/0.026
			220 V	0.031/0.024
Holding current	A	AC	100 V	0.028/0.022
			110 V	0.025/0.020
			200 V	0.017/0.013
			220 V	0.015/0.012
		DC	12 V	0.083
			24 V	0.042
Power consumption	W	AC	100 V	1.8/1.4
			110 V	(1.8/1.5)
			200 V	2.1/1.6
			220 V	(2.2/1.7)
Values in ( ) are with lamp		DC	12 V	1(1.2)
			24 V	
Thermal class				B (molded coil)
Wiring method				Electrical plug connector

Individual specifications

Item		GMF2
Port size	P/R1/R2 port	Rc1/2, Rc3/4
(*1)	A/B port	Rc3/8, Rc1/2

*1: As G and NPT threads can also be used for piping port screws, contact CKD for details.

Performance/Characteristics

Item			GMF2
Response time (*2) ms	2-position	Single	40 (ON), 60 (OFF)
		Double	40
	3-position		40 (when ON), 60 (when neutral)

*2: The response time is the value with a working pressure of 0.5 MPa, no lubrication, and a DC power supply.
It depends on the pressure and the lubricant quality.

Weight

Manifold base	Station No.	1	2	3	4	5	6	7	8	9	10
(kg)		2.30	3.17	4.04	4.91	5.79	6.66	7.53	8.40	9.27	10.14
Silencer box	Model No.	SB									
Added to manifold base assembly (kg)		0.17									
Spacer	Model No.	P		R		SR		PC			
(kg)		0.41		0.41		1.18		0.54			

Flow characteristics

Model No.	Port size	Solenoid position	P→A/B		A/B→R1/R2	
			C[dm^3/(s·bar)]	b	C[dm^3/(s·bar)]	b
GMF2	Rc3/8	2-position single	9.7	0.12	11.0	0.14
		2-position double	9.7	0.12	11.0	0.14
		3-position all ports closed	9.2	0.12	10.1	0.15
		3-position A/B/R connection	9.2	0.11	11.6	0.11
		3-position P/A/B connection	9.6	0.11	10.2	0.18
		3-position all ports closed non-leaking	6.2	-	5.9	-

*1: Effective cross-sectional area S and sonic conductance C are converted as S ≈ 5.0 x C.

How to order DIN terminal box

● ISO size 2

GMF2 5 - 03 L - 04 B ( ) - SB F - ( ) ( )

Model No. Ⓐ Station No.

Quantity of port size 03 of A/B port

Ⓑ A/B port size (*1)

Quantity of port size 04 of A/B port

Ⓒ A/B port position (*2)

Ⓓ P/R port size

Ⓔ P/R port position (*3) (*4)

Ⓕ HY configuration

Ⓖ Silencer box

Ⓗ Option

Code	Description	Model No. GMF2
Ⓐ Station No.		
1	1 station	●
to	to	
10	10 stations	
Ⓑ A/B port size		
03	Rc3/8	●
04	Rc1/2	●
HX2	Rc3/8 and Rc 1/2 mixture	●
Ⓒ A/B port size		
Blank	Right	●
L	Left and right sides (select position with manifold specifications)	●
H	Left	●
Z	Rear side	●
T	Free selection (plug attached)	●
Ⓓ P/R port size		
04	Rc1/2	●
06	Rc3/4	●
HY2	Rc1/2 and Rc 3/4 mixture	●
Ⓔ P/R port position		
B	Top and bottom sides	●
D	Bottom side	●
U	Top side	●
E	P on top, R on bottom	●
F	P on bottom, R on top	●
T	Free selection (plug attached)	●
Ⓕ HY configuration		
Blank	When other than HY2 is selected with Ⓓ	●
DU	Rc1/2 on bottom, Rc3/4 on top	●
UD	Rc1/2 on top, Rc3/4 on bottom	●
Ⓖ Silencer box		
Blank	None	●
SB	Yes (D side installation)	●
Ⓗ Option		
Blank	None	●
F	P/A/B port filter integrated	●

The valve body must be prepared separately. For how to order valves, refer to page 1480. For arrangement of manifolds with valve bodies, **the manifold specifications sheet** on page 1497 **will be necessary** in addition to each model No.

⚠ Precautions for model No. selection

*1: HX is a mixture of bore sizes. Contact CKD for details.
*2: The instructions of Ⓒ indicate the port positions.
Those other than the instructions will all be plugs.
*3: The instructions of Ⓔ indicate the port positions.
The opposite side of the instructions will be plugs.
*4: When Ⓖ is with silencer box, this will be position selection for the P-port which can be selected from B, D, U, and T.
The R port is assembled with a plug for both the top and bottom.

[Example of model No.]

GMF25-03L-04B-SBF

Model: Manifold ISO size 2

Ⓐ Station No. : 5 stations
ⒷⒸ A/B port : Rc3/8 (left and right both sides piping)
ⒹⒺ P/R port : Rc1/2 (top and bottom both sides piping)
Ⓖ Silencer box : Yes (D side installation)
Ⓗ Option : P/A/B-port filter integrated

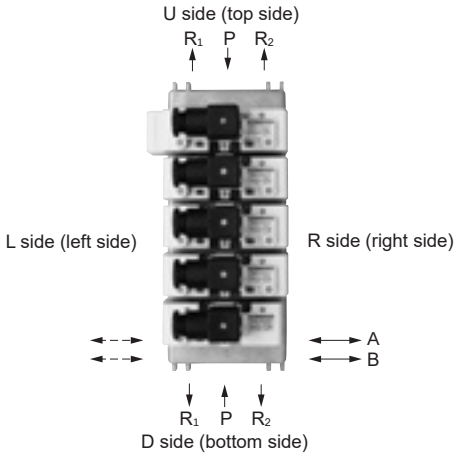

Dimensions: DIN terminal box

GMF2

● Common exhaust

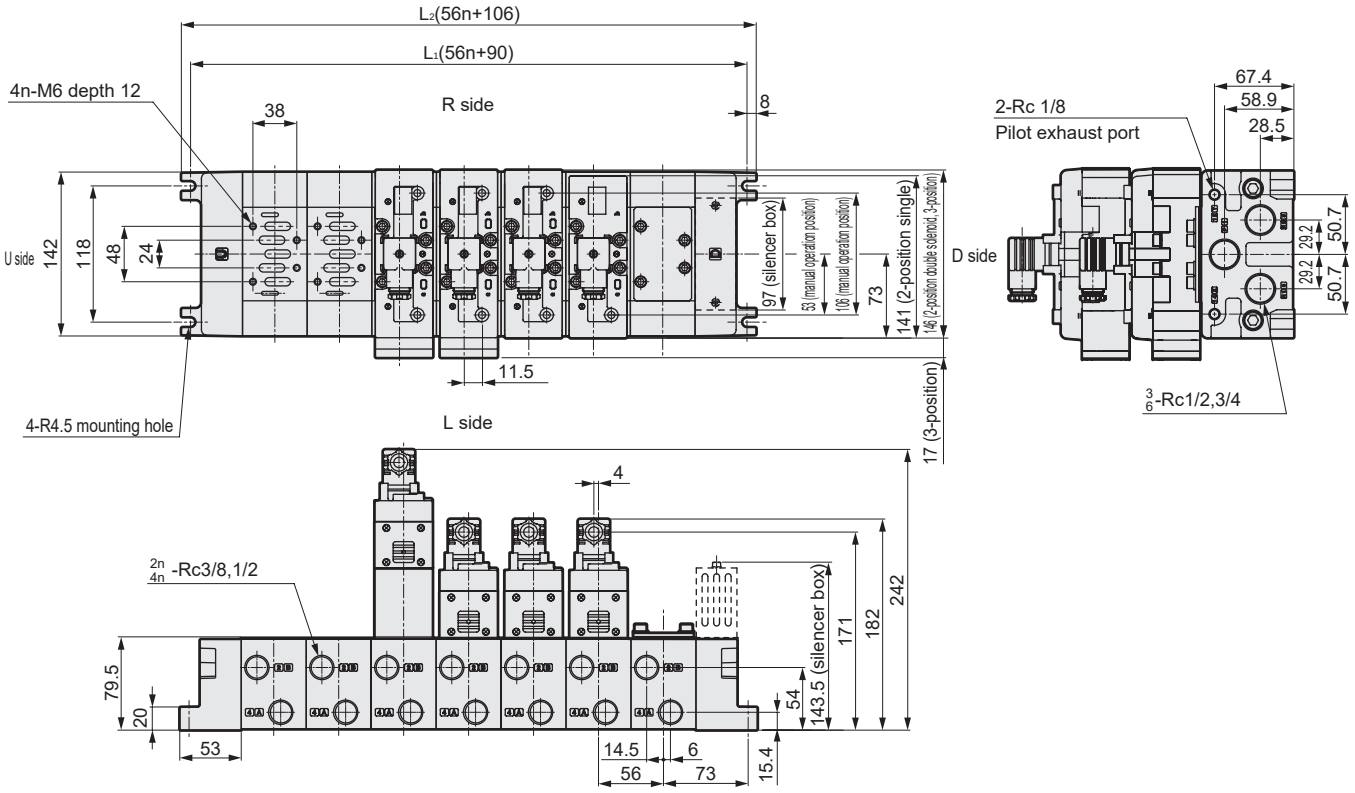

GMF2

● Individual exhaust

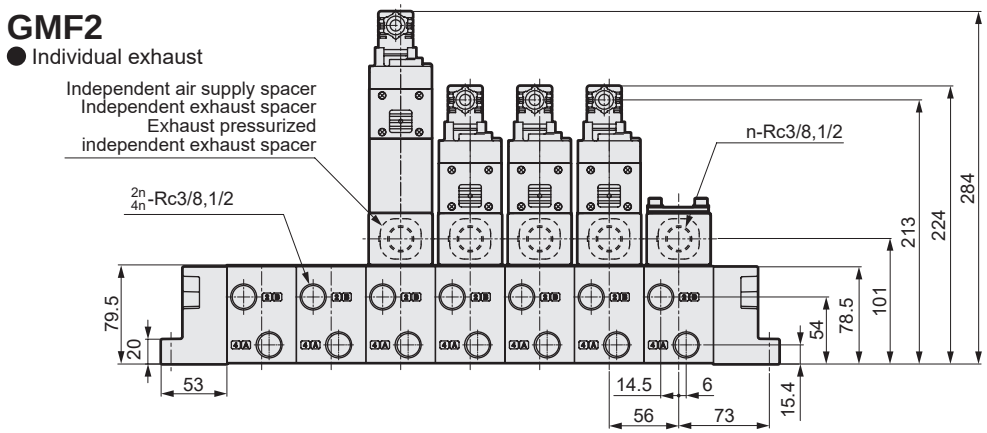

GMF2

● Rear piping

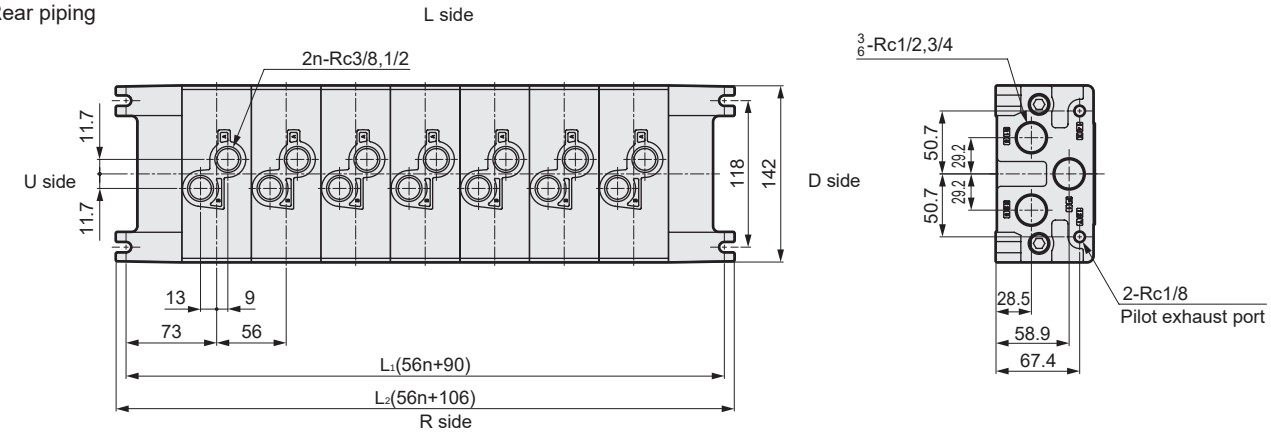

How to order

● Spacer regulator

CMF 2 - SR - A - T05 C

Ⓐ Size	
2	ISO size 2

Ⓑ Press reduction port position	
P	P port
A	A port
B	B port

Ⓒ Pressure gauge	
T05	MPa display (With limit marker)

Ⓓ Check valve	
Blank	None
C	Yes

List without check valve (blank) for SR-P and list with check valve (C) for SR-A and SR-B.

* Note that the direction of the pressure gauge is different with **CMF2-SR-A-T05C**.

CMF2-SR-P-T05
CMF2-SR-B-T05C

● Spacer regulator

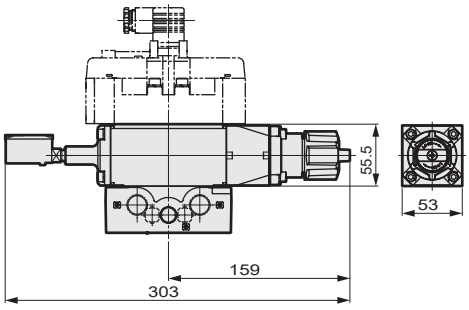

● JIS symbol

CMF2-SR-P-T05

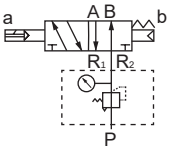

CMF2-SR-B-T05C

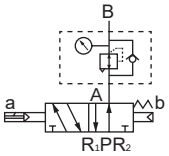

CMF2-SR-A-T05C

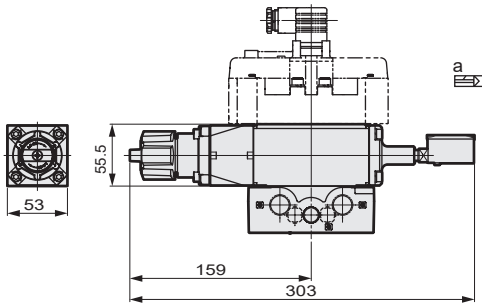

● JIS symbol

CMF2-SR-A-T05C

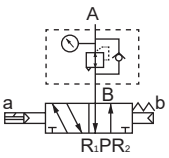

How to order DIN terminal box

GMFZ (5) - (HX3) (L) - (HY3) (B) (DU) (F) - ( ) ( )

- GMFZ: ISO size 1/2 mix manifolds
- (5): Station No.
- (HX3): A/B port size
- (L): A/B port position (*1)
- (HY3): P/R port size
- (B): P/R port position (*2)
- (DU): HY configuration
- (F): Option
- ( ): Quantity of size 1
- ( ): Quantity of size 2

Code	Description	Model No. GMFZ
A Station No.		
2	2 stations	●
to	to	●
10	10 stations	●
B A/B port size		
HX3	Size 1: 02/size 2: 03	●
HX4	Size 1: 02/size 2: 04	●
HX5	Size 1: 03/size 2: 03	●
HX6	Size 1: 03/size 2: 04	●
C A/B port position		
Blank	Right	●
L	Left and right sides (select position with manifold specifications)	●
H	Left	●
Z	Rear side	●
T	Free selection (plug attached)	●
D P/R port size		
HY3	Size 1: 03/size 2: 04	●
HY4	Size 1: 03/size 2: 06	●
HY5	Size 1: 04/size 2: 04	●
HY6	Size 1: 04/size 2: 06	●
E P/R port position		
B	Top and bottom sides	●
D	Bottom side	●
U	Top side	●
E	P on top, R on bottom	●
F	P on bottom, R on top	●
T	Free selection (plug attached)	●
F HY configuration		
DU	Smaller bore size on bottom, larger bore size on top, or 1 on bottom, 2 on top	●
UD	Smaller bore size on top, larger bore size on bottom, or 1 on top, 2 on bottom	●
G Option		
Blank	None	●
F	P/A/B port filter integrated	●

⚠ Precautions for model No. selection

*1: Instructions of C will be port positions. Those other than the instructions will all be plugs.
*2: Instructions of E will be port positions. The opposite side of the instructions will be plugs.

The valve body must be prepared separately. For how to order valves, refer to pages 1474 and 1480. For arrangement of manifolds with valve bodies, **the manifold specifications sheet** on page 1498 **will be necessary** in addition to each model No.

No	Item	Model No.	Fig.	Remarks
1	ISO size 1/2 mixed block	**GMFBZ-00L**	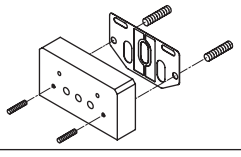	U side size 1 D side size 2 for mixed block with bolts and gasket
		GMFBZ-00R	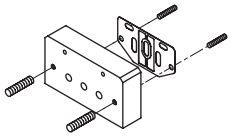	U side size 2 D side size 1 for mixed block with bolts and gasket

Mix manifold outline drawing

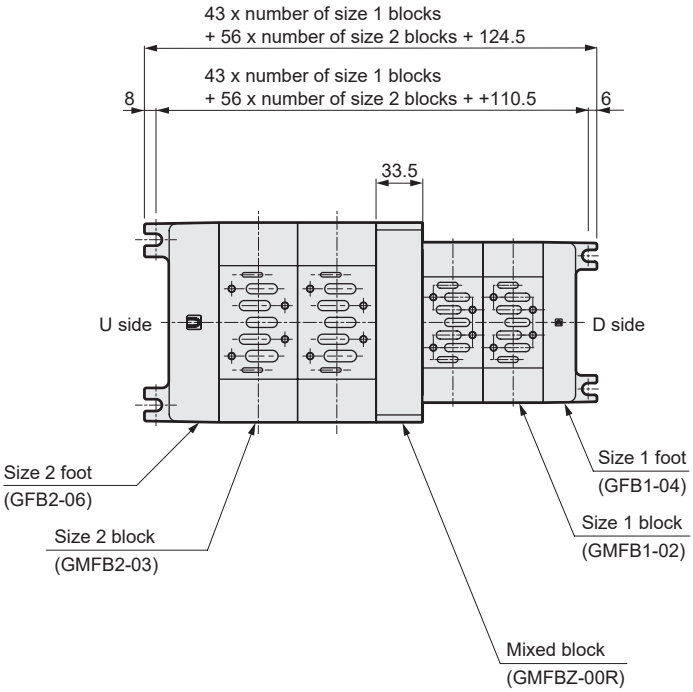

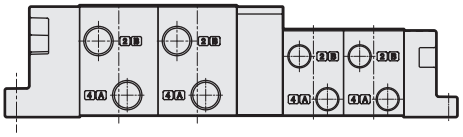

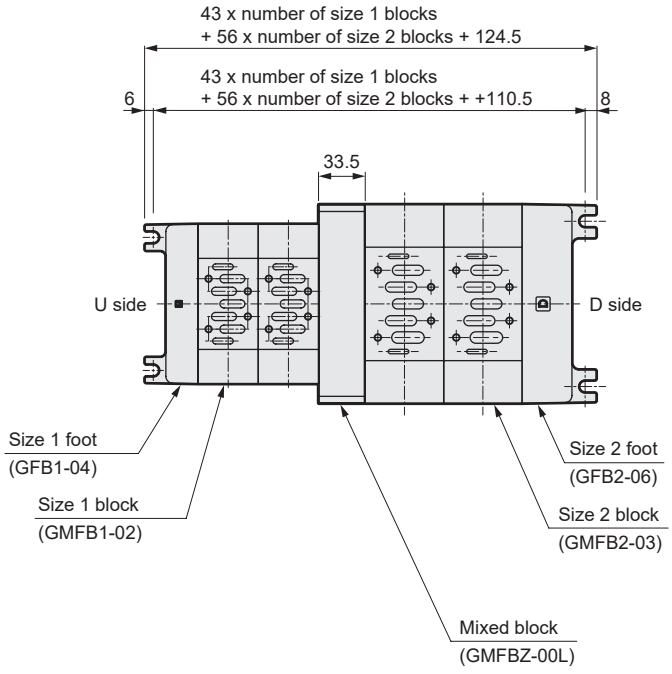

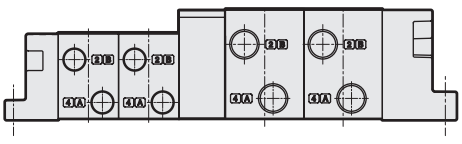

* The dimensions for the size 1/2 feet and the blocks are as listed on pages 1486 and 1490.

Manifold option

Optional descriptions	Model No.		Remarks
	ISO size 1	ISO size 2	
1. Independent air supply spacer 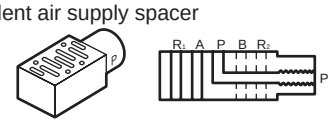	CMF1-P-02 (Rc1/4) 03 (Rc3/8)	CMF2-P-03 (Rc3/8) 04 (Rc1/2)	1. For individual air supply port Clamp/used for differing pressures 2. Individual exhaust for exhaust pressurization
2. Independent exhaust spacer 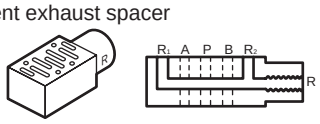	CMF1-R-02 (Rc1/4) 03 (Rc3/8)	CMF2-R-03 (Rc3/8) 04 (Rc1/2)	1-port exhaust with individual exhaust (back pressure countermeasures)
3. Adaptor 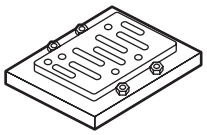	CU1-00 (FS/FD2 Series, Rc1/4, 3/8) CU1-01 (FS/FD3 Series, Rc1/4, 3/8, 1/2)	CU2-00 (FS/FD3 Series, Rc1/4, 3/8, 1/2) CU2-01 (FS/FD4 Series, Rc1/2, 3/4)	PV5G-6 and PV5G-8 are installed on conventional model type F^{S2}_{D3}. (Custom order product)
4. Masking plate 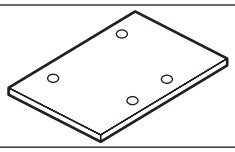	CM1-00	CM2-00	For PV5G-6 For PV5G-8 For discrete masking
5. Flow path cutoff plate 	GM1-01	GM2-01	Manifold (GMF1/GMF2) P/R_1/R_2 port For masking
6. Base gasket 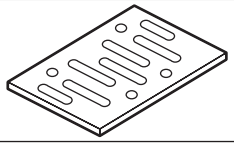	PV5G-6-BASE-GASKET	PV5G-8-BASE-GASKET	For PV5G-6 For PV5G-8 These cannot be used on the bottom surface of the spacers.
	PV5-6-BASE-GASKET	PV5-8-BASE-GASKET	For the bottom surface of spacers
7. Mounting screw 	CMF1-M5X35	CMF2-M6X45	Set of 4
8. Spacer regulator 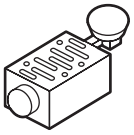	CMF1-SR-P-T05 CMF1-SR-A-T05C CMF1-SR-B-T05C Model No. selection page 1487	CMF2-SR-P-T05 CMF2-SR-A-T05C CMF2-SR-B-T05C Model No. selection page 1491	Use with different pressures
9. Air pilot check valve 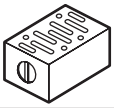	CMF1-PC	CMF2-PC	Retain custom position of cylinder
10. Foot U side 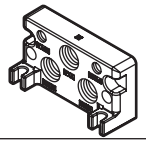	GFB1- 03/04 U	GFB2- 04/06 U	2 hexagon socket head cap screws, plugs, and a gasket on the U side foot are attached.
D side	GFB1- 03/04 D	GFB2- 04/06 D	
11. Manifold; block 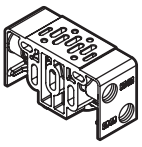	GMFB1- 02/03 T	GMFB2- 03/04 T	For left/right side piping 2 tie rods, plug and gasket are attached.
	GMFB1- 02/03 Z	GMFB2- 03/04 Z	For rear side piping 2 tie rods and gasket are attached.
12. Tie rod 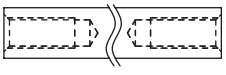	GMF1-TR-V*1 *1: 1 to 10 (station No.)	GMF2-TR-V*1 *1: 1 to 10 (station No.)	Set of 2 Tie rod length from 1 to 10 stations as used at shipping.
13. Tie rod for station expansion 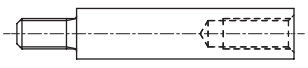	GMF1-TR-VZ	GMF2-TR-VZ	Set of 2 Use when adding onto the tie rods. Length can be added by 1 station.

Manifold

A wide variety of combinable supply, exhaust, and piping methods are available in the lineup.
Select the ideal function for your application.

1 General use

● Common exhaust method

The most common method, in which solenoid valve supply and exhaust is centralized in one location through the use of P (supply) and R (exhaust) ports passing through the connected manifold block interior.

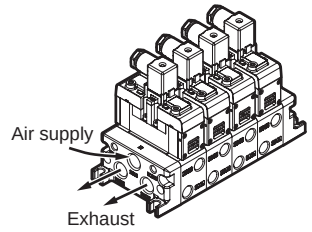

2 Applications for general use

● Individual exhaust method

As the R1/2 (exhaust) ports are independent for each solenoid valve, this prevents the popping out phenomenon of adjacent cylinders caused by back pressure.
Exhaust is processed individually by inserting an independent exhaust spacer (CMF1-R-*) between the manifold block and the valve body.

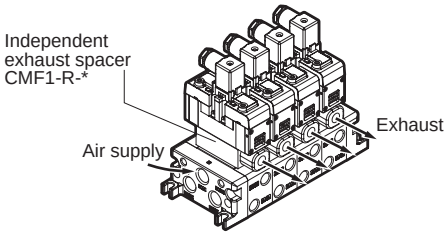

● Individual supply method

As the P (air supply) port is independent for each valve, it is possible to supply a different pressure only to certain valves within the manifold.
Air supply is processed individually by inserting an independent air supply spacer (CMF1-P-*) between the manifold block and the valve body.

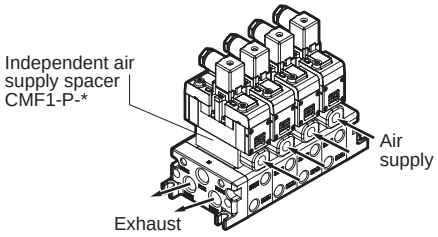

● Individual supply/individual exhaust method

Use this method in order to allow individual configurations for the P (air supply) port and R (exhaust) port of certain valves within the manifold.
Example: When the unit is being used with no lubrication but a certain valve alone must be lubricated
Air supply and exhaust are processed individually by inserting an independent air supply spacer (CMF1-P-*) and an independent exhaust spacer (CMF1-R-*) between the manifold block and the valve body.

● Different pressure supply method

With this method of supplying both higher and lower pressure to a single manifold, a flow path cutoff plate (GM1-01) is inserted between the manifold blocks with different pressures.

3 Special use (exhaust pressurized method)

Optimal for use when there is a need to supply two or more types of different pressures to a single manifold.
Example: When driving a 2-piston cylinder used with a welder

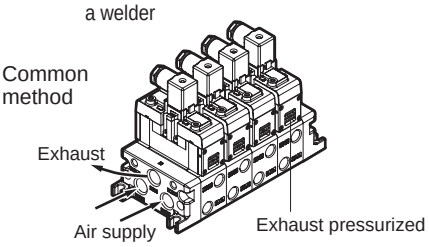

● Example of use of exhaust pressurized type

Common method

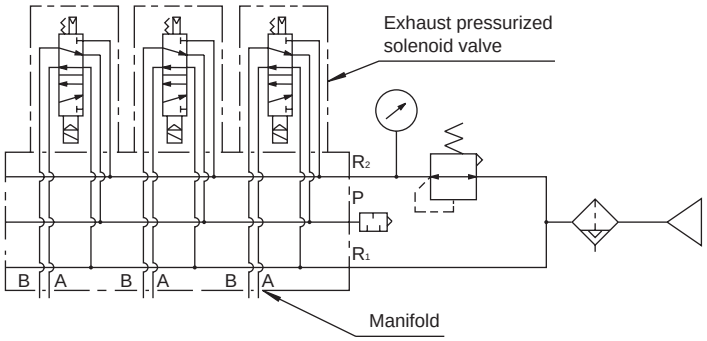

● Terminal box (model No.: PV5G-DIN-TRM-BOX)

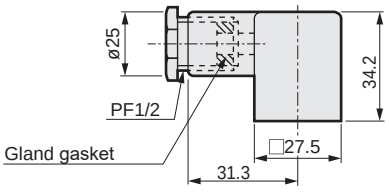

Gland gasket inner diameter	Color	Compatible (cord/cable) O.D.
ø10.5	Black	ø8.5 to ø11.5

How to wire

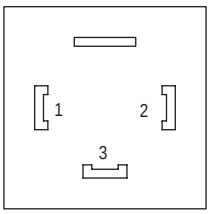

Pin No.	Name
1	a SOL
2	b SOL
3	COM

There is no specification of polarity when using a DC power supply.

4 General/special common descriptions

● Rear piping method

When piping cannot be installed from the side, it is possible to install all or part of the piping of A/B ports from the bottom surface of the manifold.

Manifold specifications sheet

ISO size 1 DIN terminal box

Issued / /

Company

Contact

Order No.

● Contact ● Quantity Set ● Delivery date /

Slip No.	Order No.

● Manifold model No.

GMF 1 □ - □ □ - □ □ □ - □ - □ - □ □

A ISO size · B Station No. · C A/B Port size · D A/B Port position · E P/R Port size · F P/R Port position · G HY configuration · H Silencer box · I Manifold option · J Voltage · K Surge suppressor/lamp · L Valve option

Ⓐ ISO size		Ⓑ Station No.		Ⓒ A/B Port size		Ⓓ A/B Port position		Ⓔ P/R Port size		Ⓕ P/R Port position		Ⓖ HY configuration		Ⓗ Silencer box		Ⓘ Manifold option	
1	PV5G-6	1	1 station	02	Rc1/4	Blank	Right	03	Rc3/8	B	Top/bottom sides	Blank	When other than HY is selected with Ⓔ	Blank	None	Blank	None
		to	to	03	Rc3/8	L	Left/right sides	04	Rc1/2	D	Bottom side			SB	Yes (D installation)	F	P/A/B port filter equipped
		10	10 stations	HX1	Rc1/4, Rc3/8 Mix	H	Left	HY1	Rc1/8, Rc1/2 Mix	U	Top side	DU	Rc3/8 on bottom, Rc1/2 on top				
						Z	Rear side			E	P: top/R: bottom						
						T	Plug attached			F	P: bottom/R: top	UD	Rc3/8 on top, Rc1/2 on bottom				
										T	Plug attached						

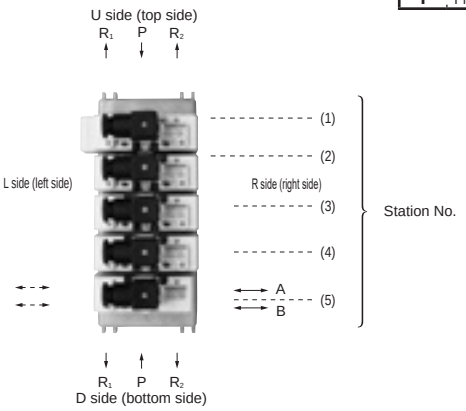

Ⓙ Voltage		Ⓚ Surge suppressor/lamp		Ⓛ Valve option	
1	100 VAC	Blank	None	Blank	None
2	200 VAC	N	With surge suppressor/indicator lamp	A	Coolant proof
3	24 VDC				
4	12 VDC				
5	110 VAC				
6	220 VAC				

Note: Items Ⓙ, Ⓚ, and Ⓛ are when the manifold is assembled and the mounted valve option has been selected.

★ When placing an order, list the solenoid valve model No. (1) to (9) from the figure at left in the following field for the solenoid valve model No.
When selecting options, mark the corresponding field for the option below with a circle.

Station No			1	2	3	4	5	6	7	8	9	10
Solenoid valve model No.	PV5G-6											
When L has been selected with Ⓓ, designate the plug position		R										
		L										
Option	Air supply spacer											
	Exhaust spacer											
	Pilot check valve											
	Spacer regulator	CMF*-SR-P										
		CMF*-SR-A										
		CMF*-SR-B										
	Flow path cutoff plate	Air supply path cutoff plate										
		Exhaust path cutoff plate										
	When Ⓒ is HX, specify the mixed configuration of the bore size.	02										
		03										

Solenoid valve model No.

2-position single		PV5G-6-FG-S	(1)
2-position double		PV5G-6-FG-D	(2)
3-position all ports closed	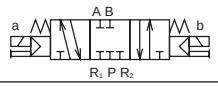	PV5G-6-FHG-D	(3)
3-position A-B-R connection	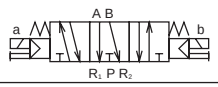	PV5G-6-FJG-D	(4)
3-position P-A-B connection		PV5G-6-FIG-D	(5)
3-position all ports closed non-leaking	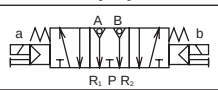	PV5G-6-FPG-D	(6)
2-position single exhaust pressurized	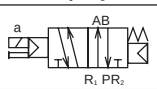	PV5G-6-YZ-S	(7)
2-position double exhaust pressurized	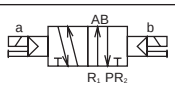	PV5G-6-YZ-D	(8)
Masking plate		CM1-00	(9)

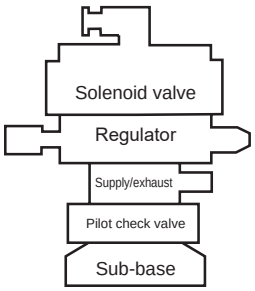

Order of assembly of options (spacers)

Note) The order from the sub-base to the solenoid valve is basically as shown in the figure at left. For spacers not in use, simply stack them as removed.

Manifold specifications sheet

ISO size 2 DIN terminal box

Issued / /

Company

Contact

Order No.

● Contact ● Quantity Set ● Delivery date /

Slip No.	Order No.

● Manifold model No.

GMF 2 □ - □ □ - □ □ □ - □ □ - □ □ □

Ⓐ ISO size | Ⓑ Station No. | Ⓒ A/B Port size | Ⓓ A/B Port position | Ⓔ P/R Port size | Ⓕ P/R Port position | Ⓖ HY configuration | Ⓗ Silencer box | Ⓘ Manifold option | Ⓙ Voltage | Ⓚ Surge suppressor/lamp | Ⓛ Valve option

ISO size / Station No. / A/B Port size / A/B Port position / P/R Port size / P/R Port position / HY configuration / Silencer box / Manifold option / Voltage / Surge suppressor/lamp / Valve option

Ⓐ ISO size

2	PV5G-8

Ⓑ Station No.

1	1 station
to	to
10	10 stations

Ⓒ A/B Port size

03	Rc⅜
04	Rc½
HX2	Rc⅛, Rc¼ Mix

Ⓓ A/B Port position

Blank	Right
L	Left/right sides
H	Left
Z	Rear side
T	Plug attached

Ⓔ P/R Port size

04	Rc½
06	Rc¾
HY2	Rc½, Rc¾ Mix

Ⓕ P/R Port position

B	Top/bottom sides
D	Bottom side
U	Top side
E	P: top/R: bottom
F	P: bottom/R: top
T	Plug attached

Ⓖ HY configuration

Blank	When other than HY is selected with Ⓔ
DU	Rc½ on bottom, Rc¾ on top
UD	Rc½ on top, Rc¾ on bottom

Ⓗ Silencer box

Blank	None
SB	Yes (D installation)

Ⓘ Manifold option

Blank	None
F	P/A/B port filter equipped

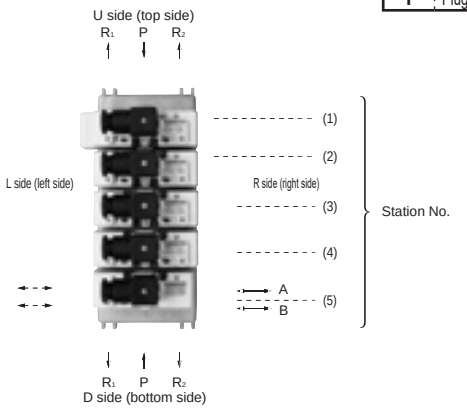

Ⓙ Voltage

1	100 VAC
2	200 VAC
3	24 VDC
4	12 VDC
5	110 VAC
6	220 VAC

Ⓚ Surge suppressor/lamp

Blank	None
N	With surge suppressor/indicator lamp

Ⓛ Valve option

Blank	None
A	Coolant proof

Note: Items Ⓙ, Ⓚ, and Ⓛ are when the manifold is assembled and the mounted valve option has been selected.

★ When placing an order, list the solenoid valve model No. (1) to (9) from the figure at left in the following field for the solenoid valve model No.
When selecting options, mark the corresponding field for the option below with a circle.

Station No			1	2	3	4	5	6	7	8	9	10
Solenoid valve model No.	PV5G-8											
When L has been selected with Ⓓ, designate the plug position		R										
		L										
Option	Air supply spacer											
	Exhaust spacer											
	Pilot check valve											
	Spacer Regulator	CMF*-SR-P										
		CMF*-SR-A										
		CMF*-SR-B										
	Flow path cutoff plate	Air supply path cutoff plate										
		Exhaust path cutoff plate										
	When Ⓒ is HX, specify the mixed configuration of the bore size.	03										
		04										

	Solenoid valve model No.	
2-position single	PV5G-8-FG-S	(1)
2-position double	PV5G-8-FG-D	(2)
3-position all ports closed	PV5G-8-FHG-D	(3)
3-position A-B-R connection	PV5G-8-FJG-D	(4)
3-position P-A-B connection	PV5G-8-FIG-D	(5)
3-position all ports closed non-leaking	PV5G-8-FPG-D	(6)
2-position single exhaust pressurized	PV5G-8-YZ-S	(7)
2-position double exhaust pressurized	PV5G-8-YZ-D	(8)
Masking plate	CM2-00	(9)

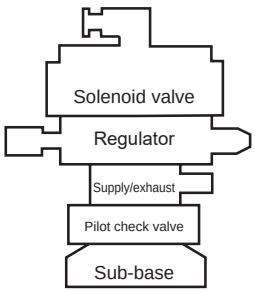

Order of assembly of options (spacers)

Note) The order from the sub-base to the solenoid valve is basically as shown in the figure at left. For spacers not in use, simply stack them as removed.

Manifold specifications sheet

ISO size 1/2 mixture DIN terminal box

Issued / /

Company

Contact

Order No.

● Contact ● Quantity Set ● Delivery date /

Slip No.	Order No.

● Manifold model No.

GMF Z □ - □ □ - □ □ □ □ - □ - □ □

Ⓐ ISO size · Ⓑ Station No. · Ⓒ A/B Port size · Ⓓ A/B Port position · Ⓔ P/R Port size · Ⓕ P/R Port position · Ⓖ HY configuration · Ⓗ Manifold option · Ⓘ Voltage · Ⓙ Surge suppressor/lamp · Ⓚ Valve option

Ⓐ ISO size	Ⓑ Station No.	Ⓒ A/B Port size	Ⓓ A/B Port position	Ⓔ P/R Port size	Ⓕ P/R Port position	Ⓖ HY configuration	Ⓗ Manifold option	Ⓘ Voltage
Z Mixture of size 1 and 2	1 1 station	HX3 1:02/2:03	Blank Right	HY3 1:03/2:04	B Top/bottom sides	DU Size 1 on bottom and size 2 on top	Blank None	1 100 VAC
	to to	HX4 1:02/2:04	L Left/right sides	HY4 1:03/2:06	D Bottom side		F P/A/B port filter equipped	2 200 VAC
	10 10 stations	HX5 1:03/2:03	H Left	HY5 1:04/2:04	U Top side	UD Size 1 on top and size 2 on bottom		3 24 VDC
		HX6 1:03/2:04	Z Rear side	HY6 1:04/2:06	E P: top/R: bottom			4 12 VDC
			T Plug attached		F P: bottom/R: top			5 110 VAC
					T Plug attached			6 220 VAC

Ⓙ Surge suppressor/lamp		Ⓚ Valve option	
Blank	None	Blank	None
N	With surge suppressor/indicator lamp	A	Coolant proof

Note: Items Ⓘ, Ⓙ, and Ⓚ are when the manifold is assembled and the mounted valve option has been selected.

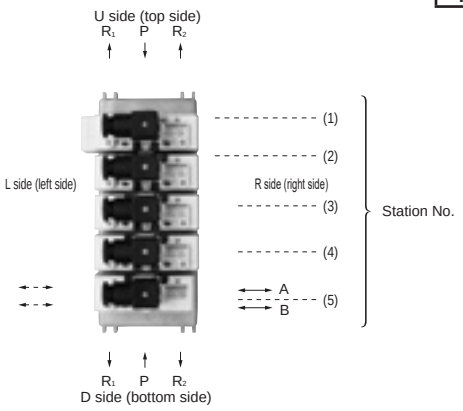

★ When placing an order, list the solenoid valve model No. (1) to (9) from the figure at left in the following field for the solenoid valve model No.
When selecting options, mark the corresponding field for the option below with a circle.

Station No			1	2	3	4	5	6	7	8	9	10
Solenoid valve model No.	PV5G-6											
	PV5G-8											
When L has been selected with Ⓓ, designate the plug position		R										
		L										
Option	Air supply spacer											
	Exhaust spacer											
	Pilot check valve											
	Spacer Regulator	CMF*-SR-P										
		CMF*-SR-A										
		CMF*-SR-B										
	Flow path Cutoff plate	Air supply path cutoff plate										
		Exhaust path cutoff plate										
	When Ⓒ is HX, specify the mixed configuration of the bore size.	02										
		03										
		04										

		Solenoid valve model No.	
2-position single	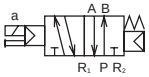	PV5G-*-FG-S	(1)
2-position double		PV5G-*-FG-D	(2)
3-position all ports closed		PV5G-*-FHG-D	(3)
3-position A-B-R connection		PV5G-*-FJG-D	(4)
3-position P-A-B connection		PV5G-*-FIG-D	(5)
3-position all ports closed non-leaking	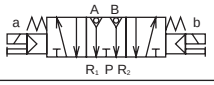	PV5G-*-FPG-D	(6)
2-position single exhaust pressurized	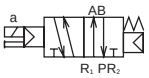	PV5G-*-YZ-S	(7)
2-position double exhaust pressurized	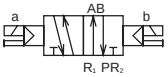	PV5G-*-YZ-D	(8)
Masking plate		CM*-00	(9)

Note) The * marking for solenoid valve is either “6” or “8”. With the masking plate and options, this will be either “1” or “2”.

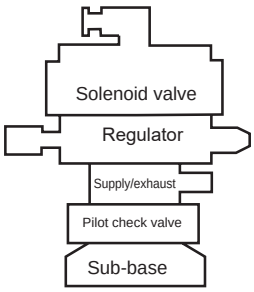

Order of assembly of options (spacers)

Note) The order from the sub-base to the solenoid valve is basically as shown in the figure at left. For spacers not in use, simply stack them as removed.

PV5/GMF
(I/O connector)

Pilot operated 5-port valve

ISO valve

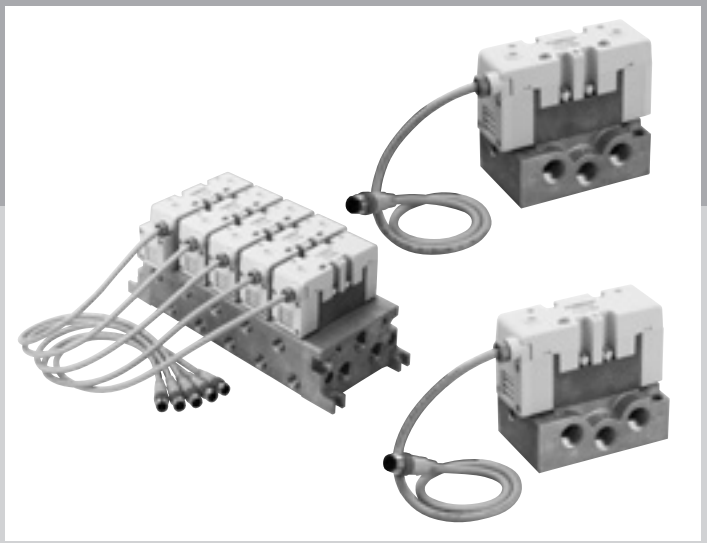

CONTENTS

Discrete valve

- ISO size 1 (PV5-6R) 1500
- ISO size 2 (PV5-8R) 1506

Individual wiring manifold

- ISO size 1 (GMF1) 1512
- ISO size 2 (GMF2) 1516

Mix manifold

- ISO size 1/2 (GMFZ) 1520

Manifold option 1522

Technical data
(1) Manifold 1523

Manifold specifications sheets 1524

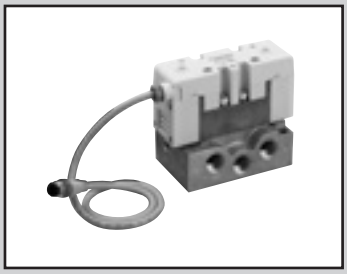

Discrete valve ISO size 1
I/O connector
Pilot operated 5-port ISO valve

PV5-6R Series

● Cylinder bore size: max. ø100

JIS symbol

● 5-port valve

2-position single (FG-S)

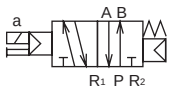

2-position double (FG-D)



3-position all ports closed (FHG)

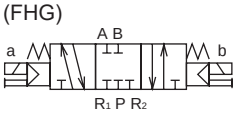

3-position all ports closed Non-leaking (FPG)

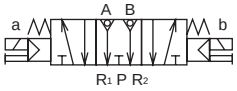

3-position A/B/R connection (FJG)

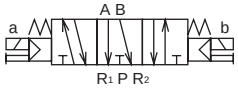

3-position P/A/B connection (FIG)

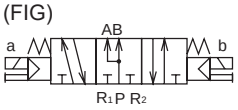

Common specifications

Item	Description
Valve and operation	Pilot operated soft spool valve
Working fluid	Compressed air
Max. working pressure MPa	1.0 (≈150 psi, 10 bar)
Min. working pressure MPa	0.15 (≈22 psi, 1.5 bar) 0.20 (≈29 psi, 2 bar) (3-position)
Proof pressure MPa	1.50 (≈220 psi, 15 bar)
Ambient temperature °C	-5 (23°F) to 60 (140°F) (no freezing)
Fluid temperature °C	5 (41°F) to 60 (140°F)
Lubrication	Not required
Degree of protection	Dust proof/jet proof (IP65 or equivalent)
Leakage cm^3/min	10 (ANR) or less
(A, B→R port)	3-position all ports closed non-leaking only 0.3 (ANR) or less (*1)
Vibration resistance m/s^2	50 or less
Shock resistance m/s^2	300 or less
Atmosphere	Cannot be used in corrosive gas environment.

*1: The initial value is listed.

Electrical specifications

Item		Description
Rated voltage V	DC	24
Voltage fluctuation range		±10%
Power consumption W(Current value A)		1.2 (0.050) * Value for models with lamp.
Thermal class		B (molded coil)
Wiring method		I/O connector

Performance/characteristics by model

Item			PV5-6R
Port size		(*1)	Rc1/4, Rc3/8
Response time ms (*2)	2-position	Single	30 (ON), 40 (OFF)
		Double	30
	3-position		30 (when ON), 50 (when neutral)

*1: As G and NPT threads can also be used for piping port screws, contact CKD for details.
*2: The response time is the value at 0.5 MPa working pressure, with no lubrication. It depends on the pressure and the lubricant quality.

Weight

Item			PV5-6R
Weight kg (*1)	2-position	Single	0.40
		Double	0.44
	3-position	Other than non-leaking	0.46
		All ports closed non-leaking	1.12

*1: The weight listed is the weight without the sub-plate.

Flow characteristics

Model No.	Port size	Solenoid position	P→A/B		A/B→R1/R2	
			C [dm^3/(s·bar)]	b	C [dm^3/(s·bar)]	b
PV5-6R	Rc1/4	2-position single	6.1	0.28	6.7	0.20
		2-position double	6.1	0.28	6.7	0.20
		3-position all ports closed	5.2	0.32	5.6	0.30
		3-position A/B/R connection	5.1	0.32	6.9	0.16
		3-position P/A/B connection	6.3	0.28	5.9	0.28
		3-position all ports closed non-leaking	3.4	-	3.0	-

*1: Effective cross-sectional area S and sonic conductance C are converted as S ≈ 5.0 x C.

How to order I/O connector

● ISO Size 1

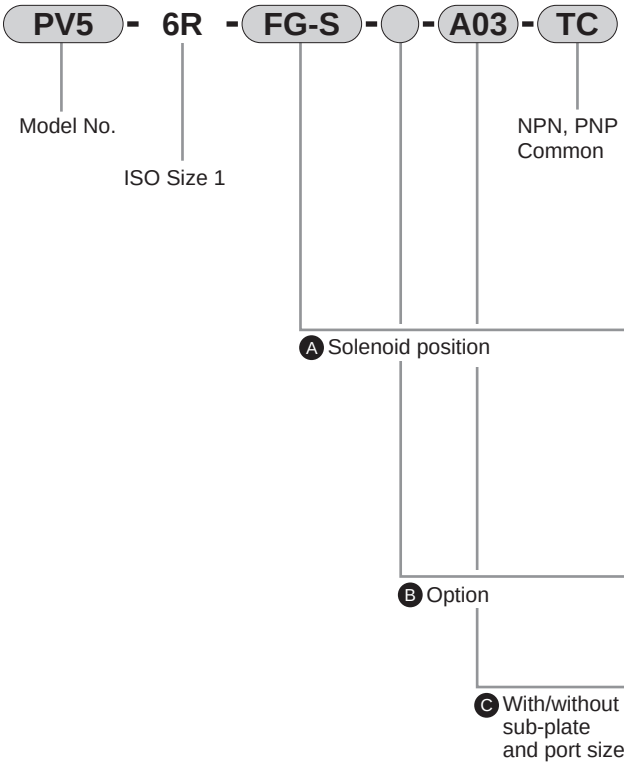

Code	Description		Model No. PV5-6R
Ⓐ Solenoid position			
FG-S	P pressurized type	2 position single	●
FG-D		2-position double	●
FHG-D		3-position all ports closed	●
FJG-D		3-position ABR connection	●
FIG-D		3-position PAB connection	●
FPG-D		3-position all ports closed non-leaking	●
Ⓑ Option			
Blank	No		●
A	Coolant proof		●
Ⓒ With/without sub-plate and port size			
Blank	Without sub-plate		●
A02	Side piping (Rc1/4 (Rc3/8 for port R only))		●
A03	Side piping Rc3/8		●

[Example of model No.]

PV5-6R-FG-S-A03-TC

Model: PV5/ISO size 1 (I/O connector)
Ⓐ Solenoid position : P pressurized 2-position single solenoid
Ⓒ Sub-plate port size : side piping Rc3/8

● Remarks

Item	Description
(1) Wiring method	I/O connector (M12) NPN, PNP common type
(2) Rated voltage	24 VDC
(3) Surge suppressor/lamp	Standard with surge suppressor and indicator lamp

*1: Refer to page 1470 for the circuit diagram with a surge suppressor/lamp.

ISO size 1 sub-plate specifications and how to order

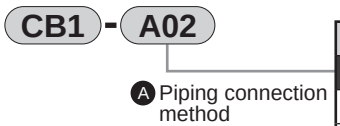

Code	Type	P/A/B port	R1/R2 port	Weight (kg)
Ⓐ Piping connection method				
A02	Side piping	Rc1/4	Rc 3/8	0.27
A03		Rc3/8		

CE marking specifications

** - TC - ST

・Standard voltage of 24 VDC or less is CE marking-compatible even if the model No. is not indicated with "ST".

Coolant proof specifications

Select option “A” of Item Ⓑ in How to order.

Internal structure and parts list: I/O connector

PV5-6R-FG-S
● 2-position single



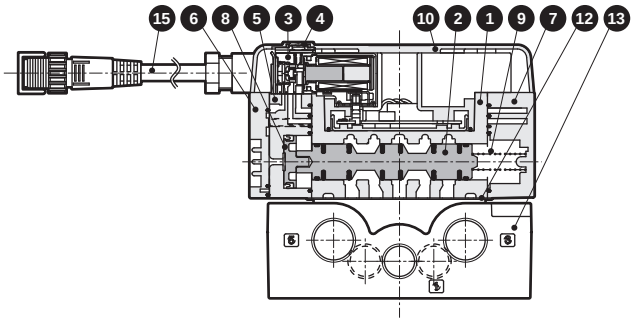

PV5-6R-FG-D
● 2-position double



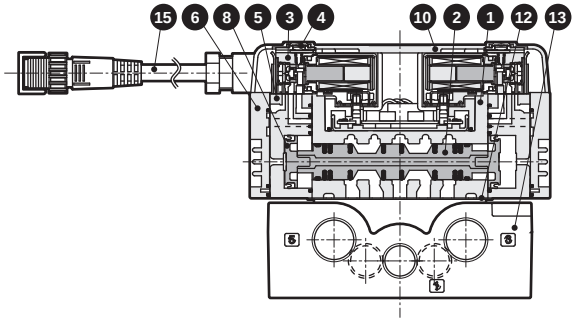

PV5-6R-FHG-D
● 3-position all ports closed



PV5-6R-FJG-D
● 3-position A/B/R connection

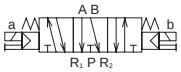

PV5-6R-FIG-D
● 3-position P/A/B connection



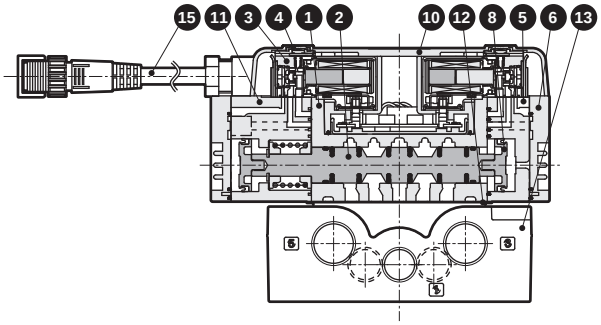

PV5-6R-FPG-D
● 3-position all ports closed non-leaking

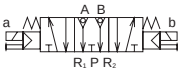

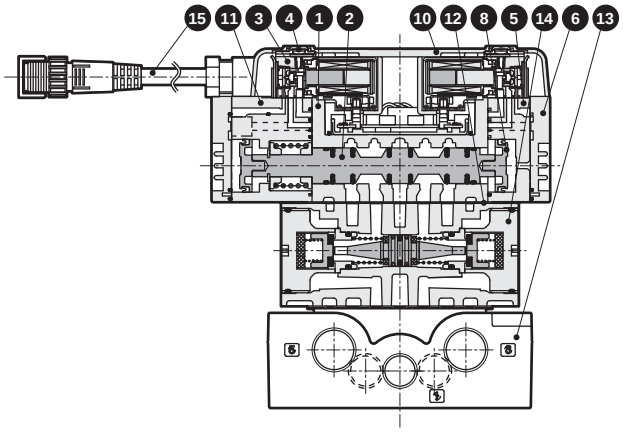

Main parts list

No.	Part name	Material	No.	Part name	Material
1	Body	Aluminum alloy die-casting	9	Spring S	-
2	Spool assembly	-	10	Wiring cover	Resin
3	Pilot valve	-	11	Pilot valve assembly for 3-position	Resin
4	Manual override	-	12	Gasket	-
5	Pilot valve assembly for double	Resin	13	Sub-plate	Aluminum alloy die-casting
6	Cap D	Resin	14	Air pilot check valve	-
7	Cap S	Resin	15	I/O cable assembly	-
8	Piston D assembly	-			

MEMO

Dimensions: I/O connector (without sub-plate)

PV5-6R-FG-S

● 2-position single

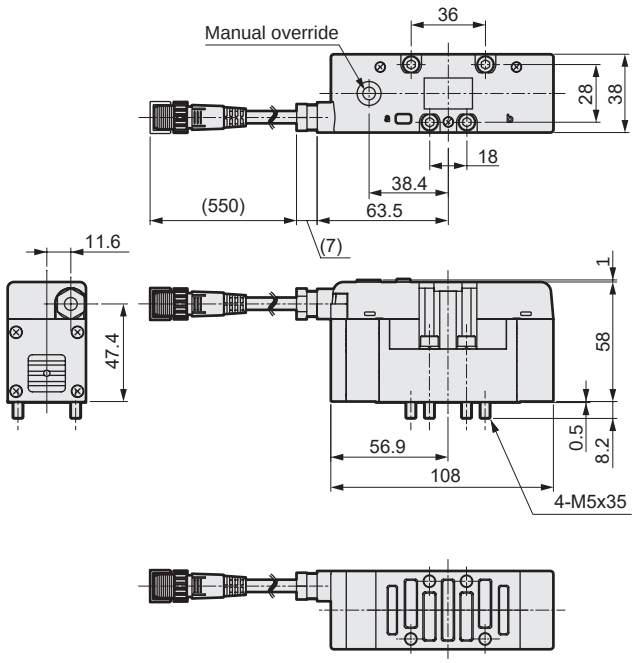

PV5-6R-FG-D

● 2-position double

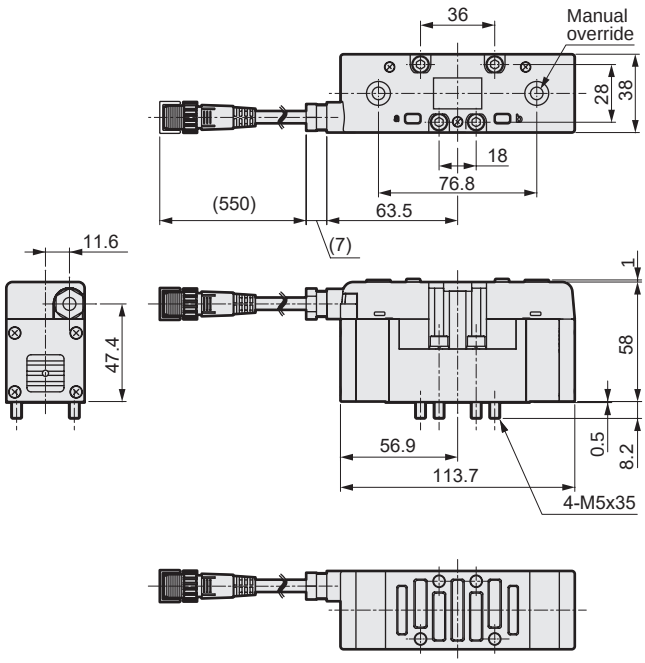

PV5-6R-FHG-D
PV5-6R-FJG-D
PV5-6R-FIG-D

● 3-position

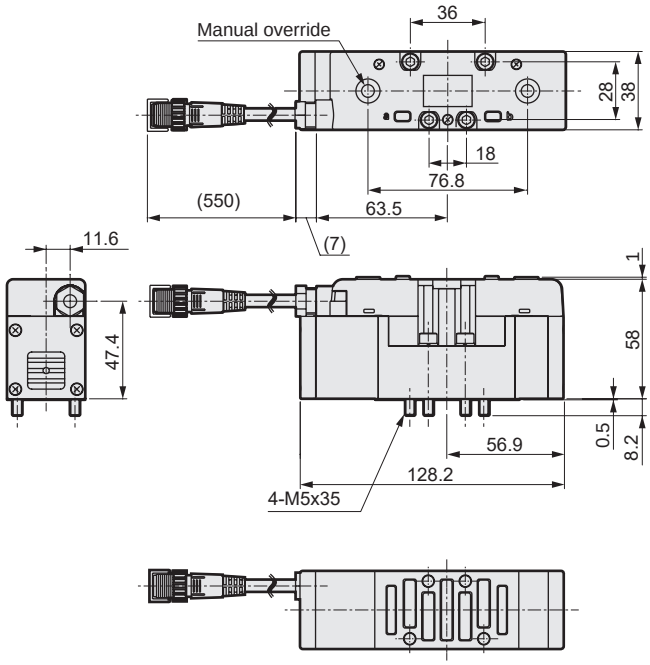

PV5-6R-FPG-D

● 3-position/non-leaking

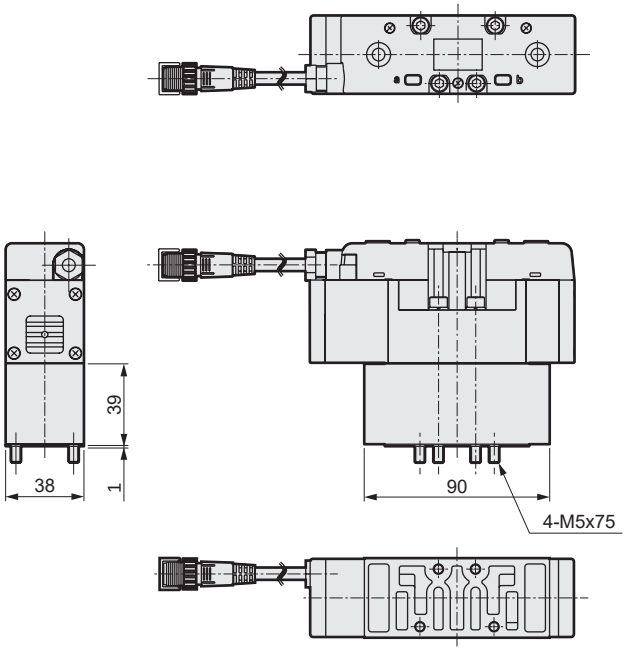

Dimensions: I/O connector (with sub-plate)

PV5-6R-FG-S-*

● 2-position single

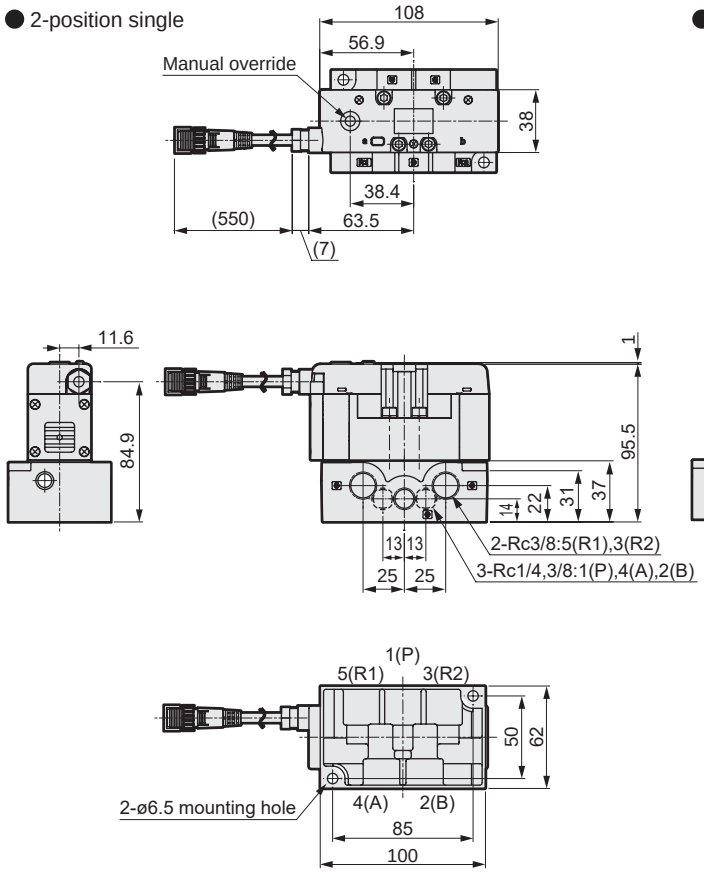

PV5-6R-FG-D-*

● 2-position double

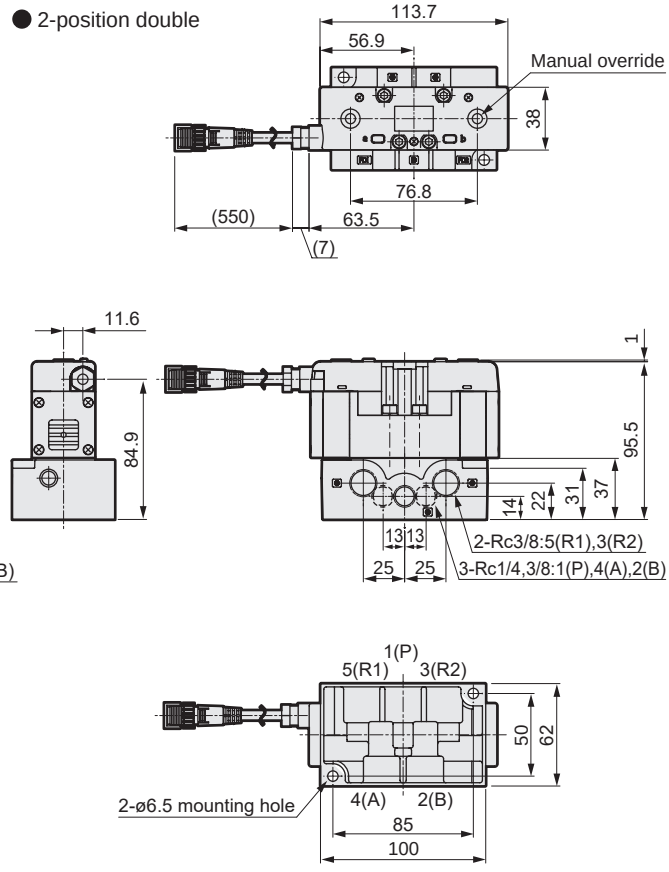

PV5-6R-FHG-D-*
PV5-6R-FJG-D-*
PV5-6R-FIG-D-*

● 3-position

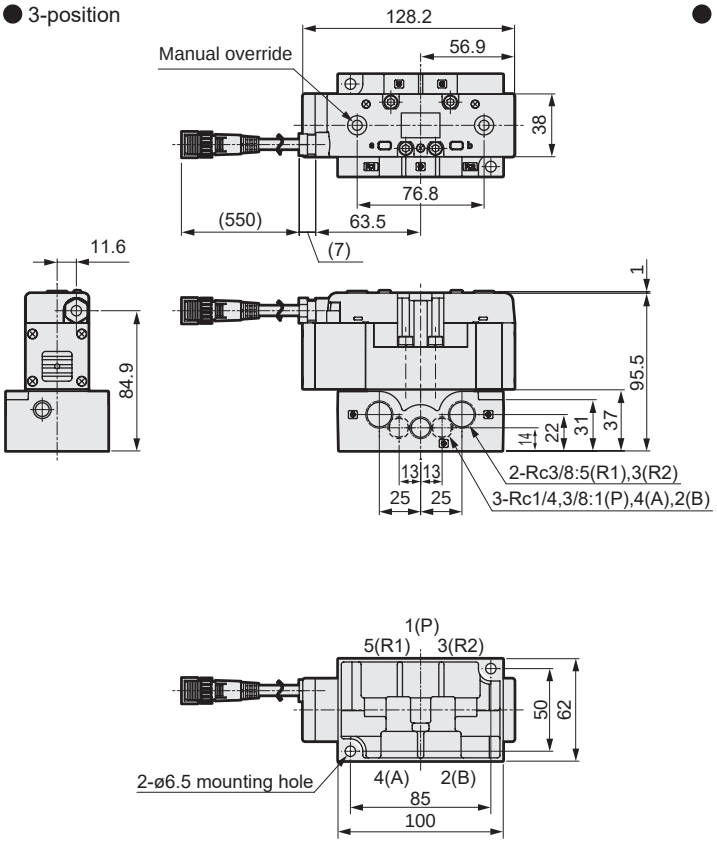

● Sub-plate dimensions

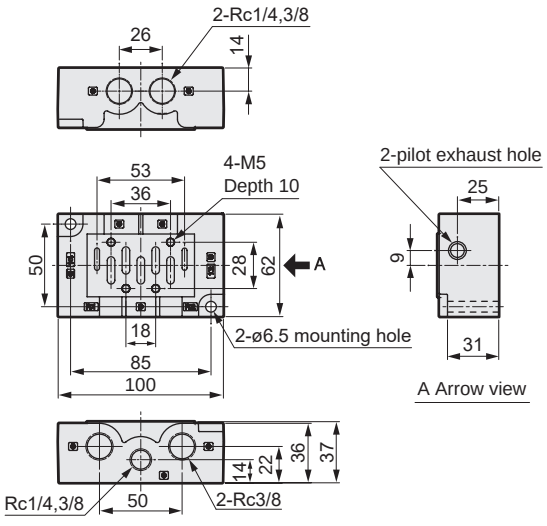

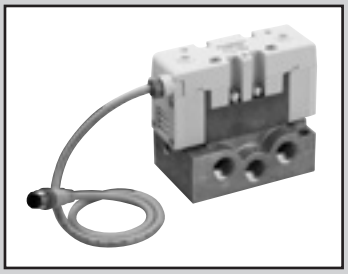

Discrete valve ISO size 2
I/O connector
Pilot operated 5-port ISO valve

PV5-8R Series

● Cylinder bore size: max. ø160

CE RoHS

JIS symbol

● 5-port valve

2-position single (FG-S)

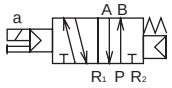

2-position double (FG-D)

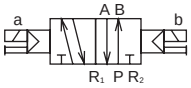

3-position all ports closed (FHG)

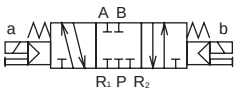

3-position all ports closed Non-leaking (FPG)

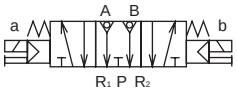

3-position A/B/R connection (FJG)

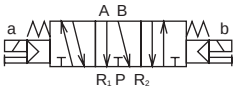

3-position P/A/B connection (FIG)

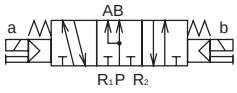

Common specifications

Item	Description
Valve and operation	Pilot operated soft spool valve
Working fluid	Compressed air
Max. working pressure MPa	1.0 (≈150 psi, 10 bar)
Min. working pressure MPa	0.15 (≈22 psi, 1.5 bar) 0.20 (≈29 psi, 2 bar) (3-position)
Proof pressure MPa	1.50 (≈220 psi, 15 bar)
Ambient temperature °C	-5 (23°F) to 60 (140°F) (no freezing)
Fluid temperature °C	5 (41°F) to 60 (140°F)
Lubrication	Not required
Degree of protection	Dust proof/jet proof (IP65 or equivalent)
Leakage cm^3/min	10 (ANR) or less
(A, B→R port)	3-position all ports closed non-leaking only 0.3 (ANR) or less (*1)
Vibration resistance m/s^2	50 or less
Shock resistance m/s^2	300 or less
Atmosphere	Cannot be used in corrosive gas environment.

*1: The initial value is listed.

Electrical specifications

Item	Description
Rated voltage V DC	24
Voltage fluctuation range	±10%
Power consumption W (Current value A)	1.2 (0.050) * Value for models with lamp.
Thermal class	B (molded coil)
Wiring method	I/O connector

Performance/characteristics by model

Item			PV5-8R
Port size (*1)			Rc3/8, Rc1/2, Rc3/4
Response time ms (*2)	2-position	Single	40 (ON), 60 (OFF)
		Double	40
	3-position		40 (when ON), 60 (when neutral)

*1: As G and NPT threads can also be used for piping port screws, contact CKD for details.
*2: The response time is the value at 0.5 MPa working pressure, with no lubrication. It depends on the pressure and the lubricant quality.

Weight

Item			PV5-8R
Weight kg (*1)	2-position	Single	0.62
		Double	0.66
	3-position	Other than non-leaking	0.69
		All ports closed non-leaking	1.34

*1: The weight listed is the weight without the sub-plate.

Flow characteristics

Model No.	Port size	Solenoid position	P→A/B		A/B→R1/R2	
			C [$dm^3/(s \cdot bar)$]	b	C [$dm^3/(s \cdot bar)$]	b
PV5-8R	Rc3/8	2-position single	10.7	0.17	13.0	0.19
		2-position double	10.7	0.17	13.0	0.19
		3-position all ports closed	10.0	0.16	11.0	0.25
		3-position A/B/R connection	9.9	0.14	13.0	0.16
		3-position P/A/B connection	11.0	0.12	12.0	0.21
		3-position all ports closed non-leaking	6.6	-	6.2	-

*1: Effective cross-sectional area S and sonic conductance C are converted as S ≈ 5.0 x C.

How to order I/O connector

● ISO size 2

PV5 - 8R - FG-S - ( ) - A03 - TC

- PV5: Model No.
- 8R: ISO size 2
- FG-S: Ⓐ Solenoid position
- ( ): Ⓑ Option
- A03: Ⓒ With/without sub-plate and port size
- TC: NPN, PNP common

Code	Description		Model No. PV5-8R
Ⓐ Solenoid position			
FG-S	P pressurized	2-position single	●
FG-D		2-position double	●
FHG-D		3-position all ports closed	●
FJG-D		3-position ABR connection	●
FIG-D		3-position PAB connection	●
FPG-D		3-position all ports closed non-leaking	●
Ⓑ Option			
Blank	None		●
A	Coolant proof		●
Ⓒ With/without sub-plate and port size			
Blank	Without sub-plate		●
A03	Side piping Rc3/8 (Rc1/2 for R port only)		●
A04	Side piping (Rc1/2)		●
A06	Side piping (Rc3/4)		●

[Example of model No.]

PV5-8R-FG-S-A03-TC

Model: PV5/ISO size 2 (I/O connector)
Ⓐ Solenoid position : P pressurized 2-position single solenoid
Ⓒ Sub-plate port size : side piping Rc3/8, R port Rc1/2

● Remarks

Item	Description
(1) Wiring method	I/O connector (M12) NPN, PNP common
(2) Voltage	24 VDC
(3) Surge suppressor/lamp	Standard with surge suppressor and indicator lamp

*1: Refer to page 1470 for the circuit diagram with a surge suppressor/lamp.

ISO size 2 sub-plate specifications and how to order

CB2 - A03

- A03: Ⓐ Piping connection method

Code	Type	P/A/B port	R1/R2 port	Weight (kg)
Ⓐ Piping connection method				
A03	Side piping	Rc3/8	Rc1/2	0.49
A04		Rc1/2		
A06		Rc3/4	Rc3/4	1.40

CE marking specifications

** - TC - ST

- Standard voltage of 24 VDC or less is CE marking-compatible even if the model No. is not indicated with "ST".

Coolant proof specifications

Select option “A” of Item Ⓑ in How to order.

Internal structure and parts list: I/O connector

PV5-8R-FG-S
● 2-position single



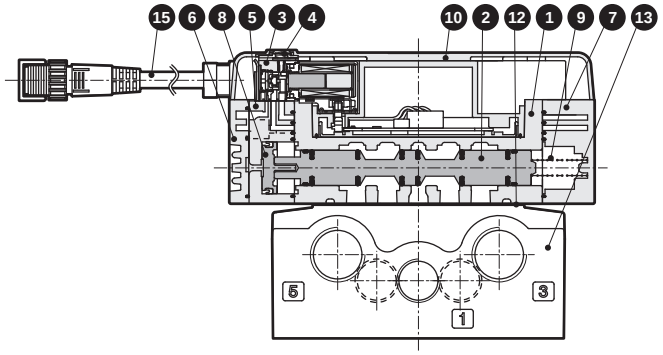

PV5-8R-FG-D
● 2-position double



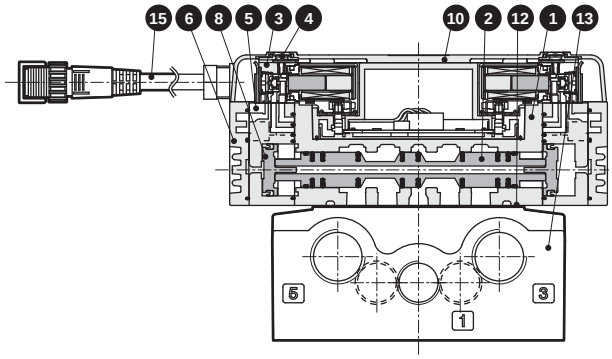

PV5-8R-FHG-D
● 3-position all ports closed



PV5-8R-FJG-D
● 3-position A/B/R connection



PV5-8R-FIG-D
● 3-position P/A/B connection



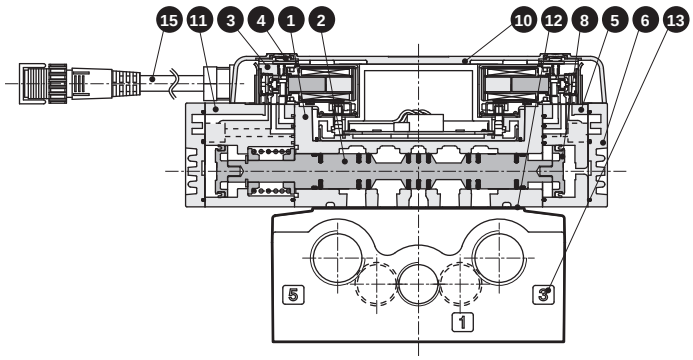

PV5-8R-FPG-D
● 3-position all ports closed
Non-leaking

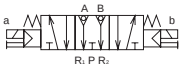

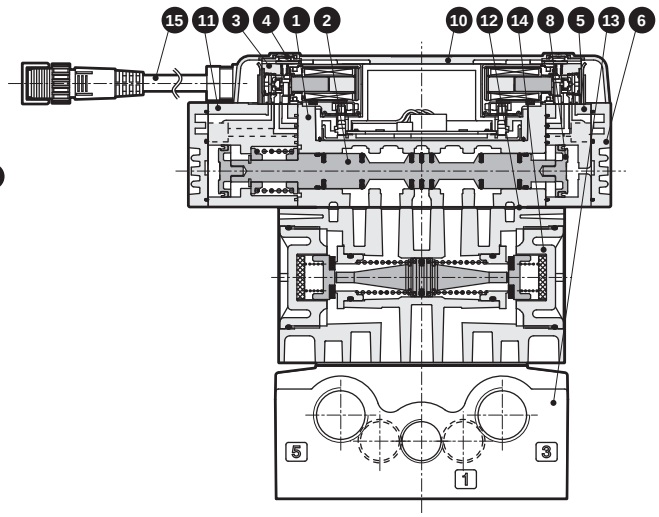

Main parts list

No.	Part name	Material	No.	Part name	Material
1	Body	Aluminum alloy die-casting	9	Spring S	-
2	Spool assembly	-	10	Wiring cover	Resin
3	Pilot valve	-	11	Pilot valve assembly for 3-position	Resin
4	Manual override	-	12	Gasket	-
5	Pilot valve assembly for double	Resin	13	Sub-plate	Aluminum alloy die-casting
6	Cap D	Resin	14	Air pilot check valve	-
7	Cap S	Resin	15	I/O cable assembly	-
8	Piston D assembly	-			

MEMO

Dimensions: I/O connector (without sub-plate)

PV5-8R-FG-S

● 2-position single

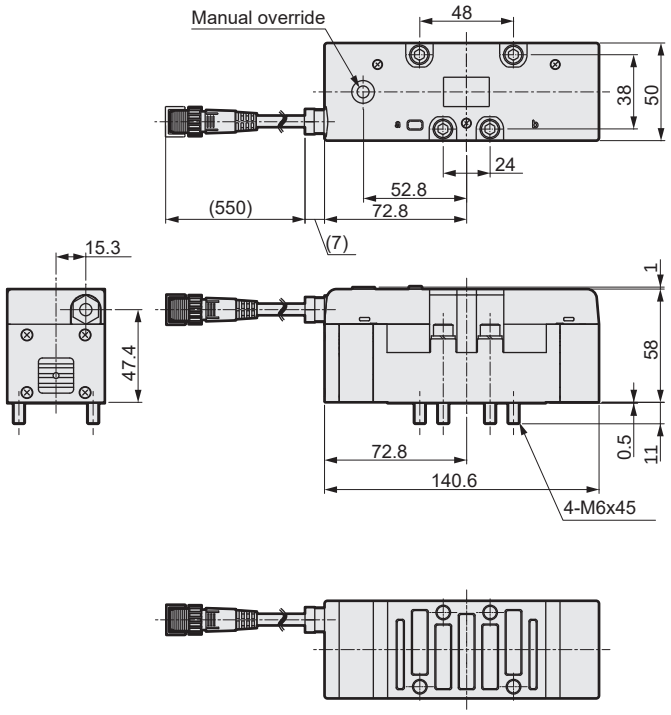

PV5-8R-FG-D

● 2-position double

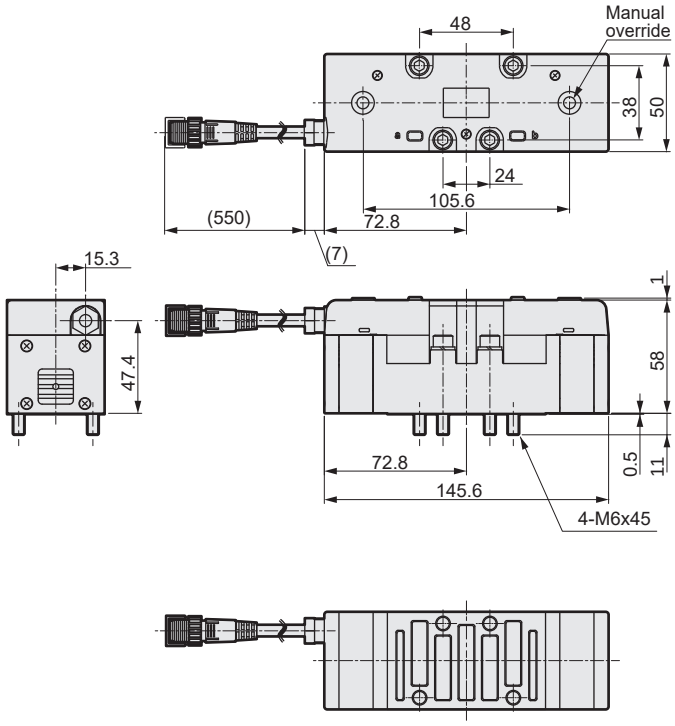

PV5-8R-FHG-D
PV5-8R-FJG-D
PV5-8R-FIG-D

● 3-position

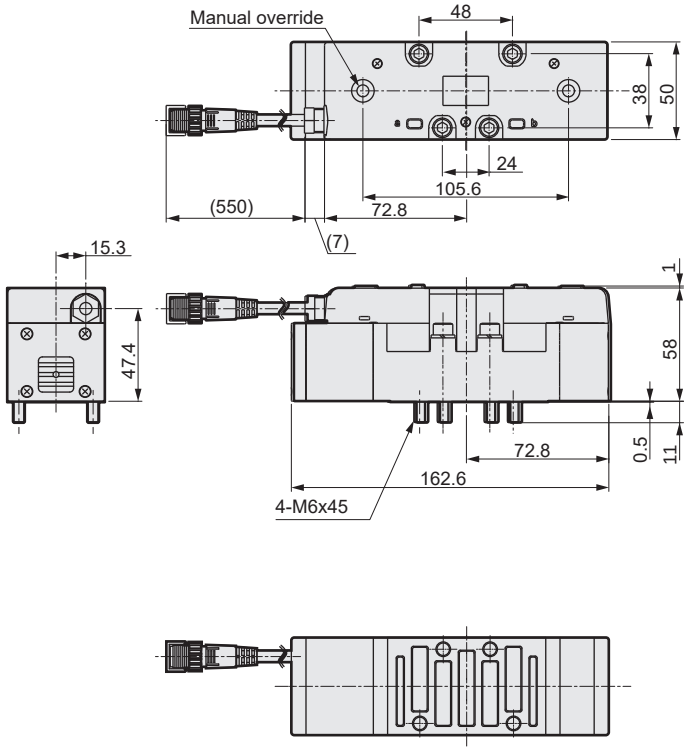

PV5-8R-FPG-D

● 3-position/non-leaking

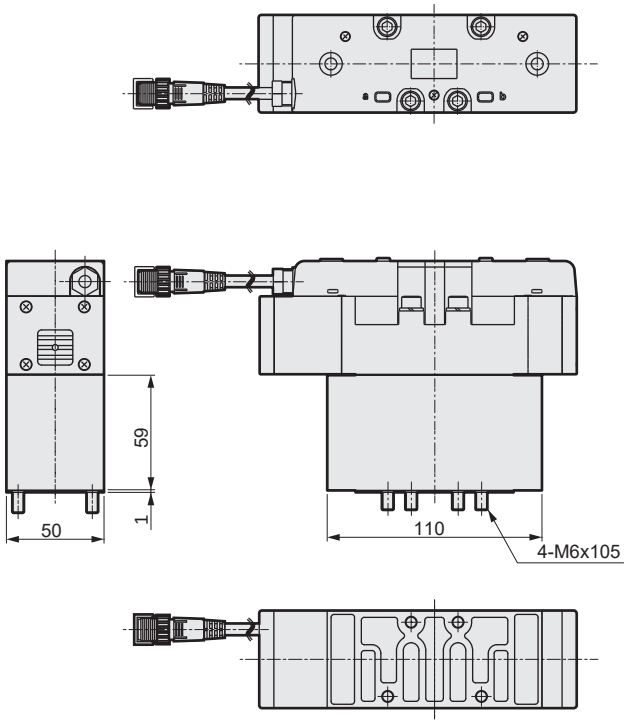

Dimensions: I/O connector (with sub-plate)

PV5-8R-FG-S-*

● 2-position single

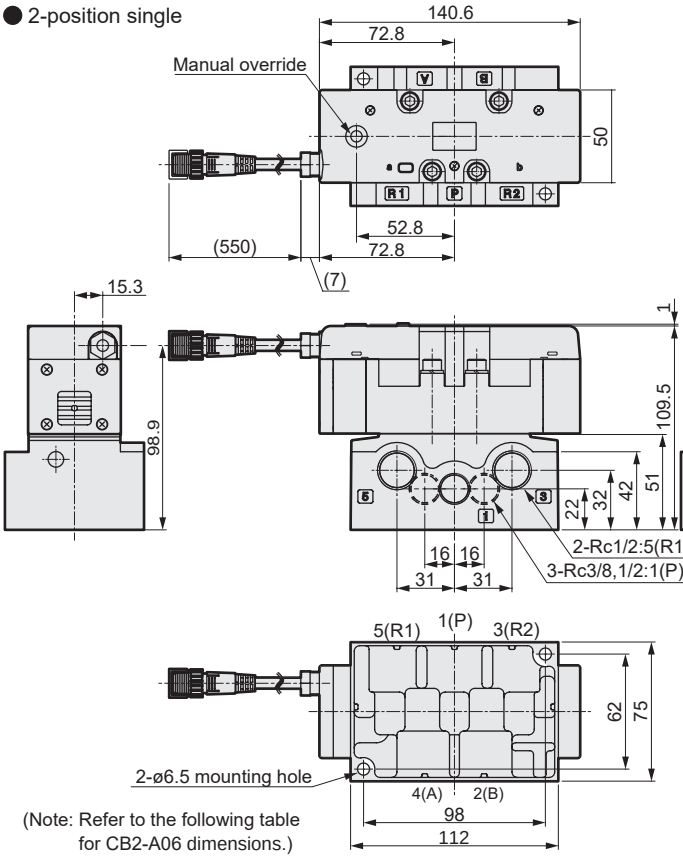

(Note: Refer to the following table for CB2-A06 dimensions.)

PV5-8R-FG-D-*

● 2-position double

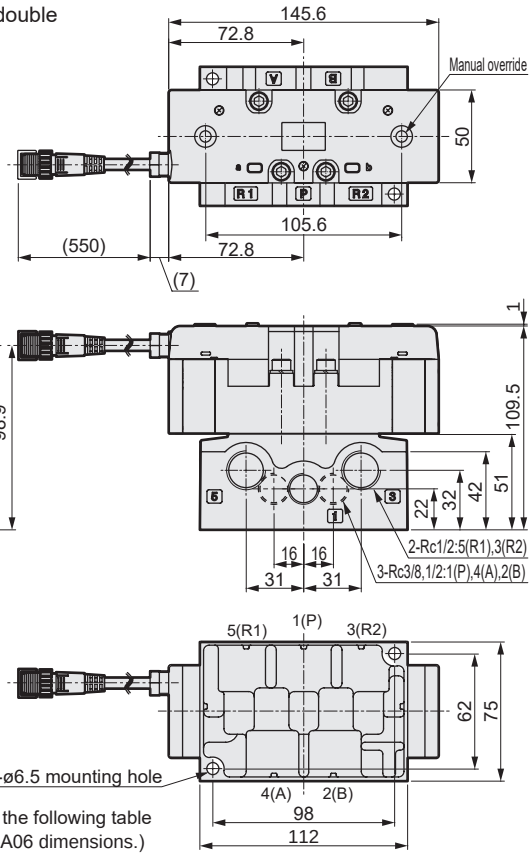

(Note: Refer to the following table for CB2-A06 dimensions.)

PV5-8R-FHG-D-*
PV5-8R-FJG-D-*
PV5-8R-FIG-D-*

● 3-position

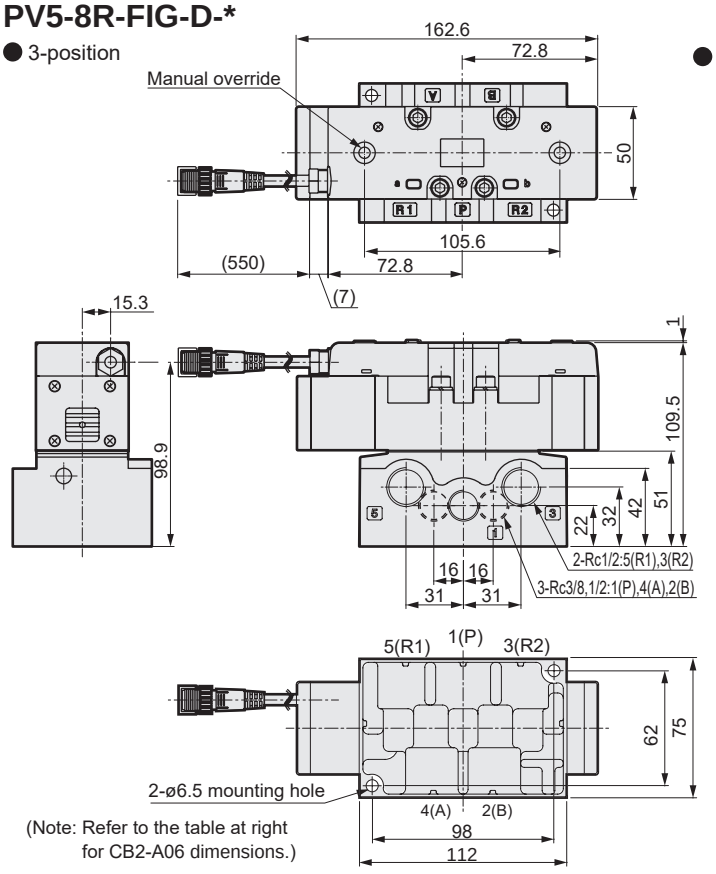

(Note: Refer to the table at right for CB2-A06 dimensions.)

● Sub-plate dimensions (CB2-*)

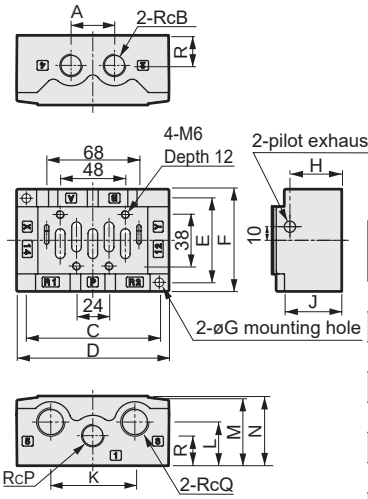

Model No.	CB2-A/B 03		CB2-A/B 04		CB2-A/B 06
A	32				40
B	3/8		1/2		3/4
C	98				128
D	112				142
E	62				72
F	75				86
G	6.5				7.5
H	38				53
J	42				55
K	62				84
L	32				42
M	50				62
N	51				63
P	3/8		1/2		3/4
Q	1/2				3/4
R	22				30

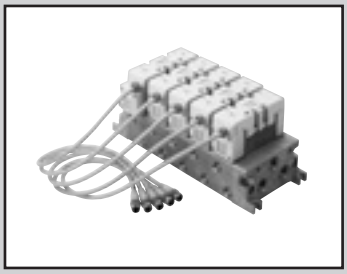

Individual wiring manifold ISO size 1
I/O connector
Pilot operated 5-port ISO valve

GMF1 Series

● Cylinder bore size: max. ø100

RoHS

Common specifications

Item	Description
Manifold method	Manifold integrated
Manifold	Common supply/common exhaust Common supply/individual exhaust Individual supply/common exhaust Individual supply/individual exhaust Different pressure supply
Station No.	1 to 10 stations
Valve and operation	Pilot operated soft spool valve
Working fluid	Compressed air
Max. working pressure MPa	1.0 (≈150 psi, 10 bar)
Min. working pressure MPa	0.15 (≈22 psi, 1.5 bar) 0.20 (≈29 psi, 2 bar) (3-position)
Proof pressure MPa	1.50 (≈220 psi, 15 bar)
Ambient temperature °C	-5 (23°F) to 60 (140°F) (no freezing)
Fluid temperature °C	5 (41°F) to 60 (140°F)
Lubrication	Not required
Degree of protection	Dust proof/jet proof (IP65 or equivalent)
Leakage cm^3/min (A, B→R port)	10 (ANR) or less 3-position all ports closed non-leaking only 0.3 (ANR) or less (*1)
Vibration resistance m/s^2	50 or less
Shock resistance m/s^2	300 or less
Atmosphere	Cannot be used in corrosive gas environment.

*1: The initial value is listed.

Electrical specifications

Item		Description
Rated voltage V	DC	24
Voltage fluctuation range		±10%
Power consumption W (Current value A)		1.2 (0.050) * Value for models with a lamp.
Thermal class		B (molded coil)
Wiring method		I/O connector

Individual specifications

Item		GMF1
Port size	P/R1/R2 port	Rc3/8, Rc1/2
(*1)	A/B port	Rc1/4, Rc3/8

*1: As G and NPT threads can also be used for piping port screws, contact CKD for details.

Performance/Characteristics

Item			GMF1
Response time (*2) ms	2-position	Single	30 (ON), 40 (OFF)
		Double	30
	3-position		30 (when ON), 50 (when neutral)

*2: The response time is the value at 0.5 MPa working pressure, with no lubrication. It depends on the pressure and the lubricant quality.

Weight

Manifold base	Station No.	1	2	3	4	5	6	7	8	9	10
(kg)		1.04	1.50	1.95	2.40	2.85	3.30	3.75	4.20	4.65	5.10
Silencer box	Model No.	SB									
Added to manifold base assembly (kg)		0.13									
Spacer	Model No.	P		R		SR		PC			
(kg)		0.22		0.22		0.64		0.25			

Flow characteristics

Model No.	Port size	Solenoid position	P→A/B		A/B→R1/R2	
			C [$dm^3/(s \cdot bar)$]	b	C [$dm^3/(s \cdot bar)$]	b
GMF1	Rc1/4	2-position single	4.8	0.25	5.2	0.26
		2-position double	4.8	0.25	5.2	0.26
		3-position all ports closed	4.4	0.27	4.7	0.27
		3-position A/B/R connection	4.4	0.25	5.3	0.25
		3-position P/A/B connection	4.8	0.27	4.7	0.27
		3-position all ports closed non-leaking	3.2	-	2.8	-

*1: Effective cross-sectional area S and sonic conductance C are converted as S ≈ 5.0 x C.

How to order I/O connector

● ISO Size 1

GMF 1 5 - 02 L - HY1 B DU - SB F - ○○

Model No. Ⓐ Station No. Quantity of port size 02 of A/B port Ⓑ A/B port size (*1) Quantity of port size 03 of A/B port Ⓒ A/B port position (*2) Ⓓ P/R port size Ⓔ P/R port position (*3) (*4) Ⓕ HY configuration Ⓖ Silencer box Ⓗ Option

Code	Description	Model No. GMF1
Ⓐ Station No.		
1	1 station	●
to	to	
10	10 stations	
Ⓑ A/B port size		
02	Rc1/4	●
03	Rc3/8	●
HX1	Rc1/4 and Rc3/8 mixture	●
Ⓒ A/B port position		
Blank	Right	●
L	Left and right sides (select position with manifold specifications)	●
H	Left	●
Z	Rear side	●
T	Free selection (plug attached) (rear side not available)	●
Ⓓ P/R port size		
03	Rc3/8	●
04	Rc1/2	●
HY1	Rc3/8 and Rc1/2 mixture	●
Ⓔ P/R port position		
B	Top and bottom sides	●
D	Bottom side	●
U	Top side	●
E	P on top, R on bottom	●
F	P on bottom, R on top	●
T	Free selection (plug attached)	●
Ⓕ HY configuration		
Blank	When other than HY1 is selected with Ⓓ	●
DU	Rc3/8 on bottom, Rc1/2 on top	●
UD	Rc3/8 on top, Rc1/2 on bottom	●
Ⓖ Silencer box		
Blank	None	●
SB	Yes (D side installation)	●
Ⓗ Option		
Blank	None	●
F	P/A/B port filter integrated	●

⚠ Precautions for model No. selection

*1: HX is a mixture of bore sizes. Contact CKD for details.
*2: The instructions of Ⓒ indicate the port positions.
Those other than the instructions will all be plugs.
*3: The instructions of Ⓔ indicate the port positions.
The opposite side of the instructions will be plugs.
*4: When Ⓖ is with silencer box,this will be position selection for the P-port which can be selected from B, D, U, and T.
The R port is assembled with a plug for both the top and bottom.

[Example of model No.]

GMF15-02L-HY1BDU-SBF

Model: Manifold ISO size 1

Ⓐ Station No. : 5 stations
ⒷⒸ A/B port : Rc1/4 (left and right both sides piping)
ⒹⒺⒻ P/R port : Rc3/8 and Rc1/2 mixture (Rc3/8 for bottom side piping and Rc1/2 for top side piping)
Ⓖ Silencer box : Yes (D side installation)
Ⓗ Option : P/A/B-port filter integrated

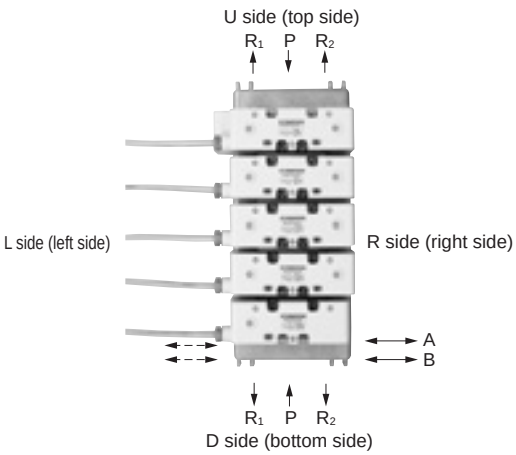

The valve body must be prepared separately. For how to order valves, refer to page 1501. For arrangement of manifolds with valve bodies, **the manifold specifications sheet** on page 1524 **will be necessary** in addition to each model No.

Dimensions: I/O connector

GMF1

● Common exhaust

P/R port size	A	B
Rc3/8	18.4	23.5
Rc1/2	22.4	22.5

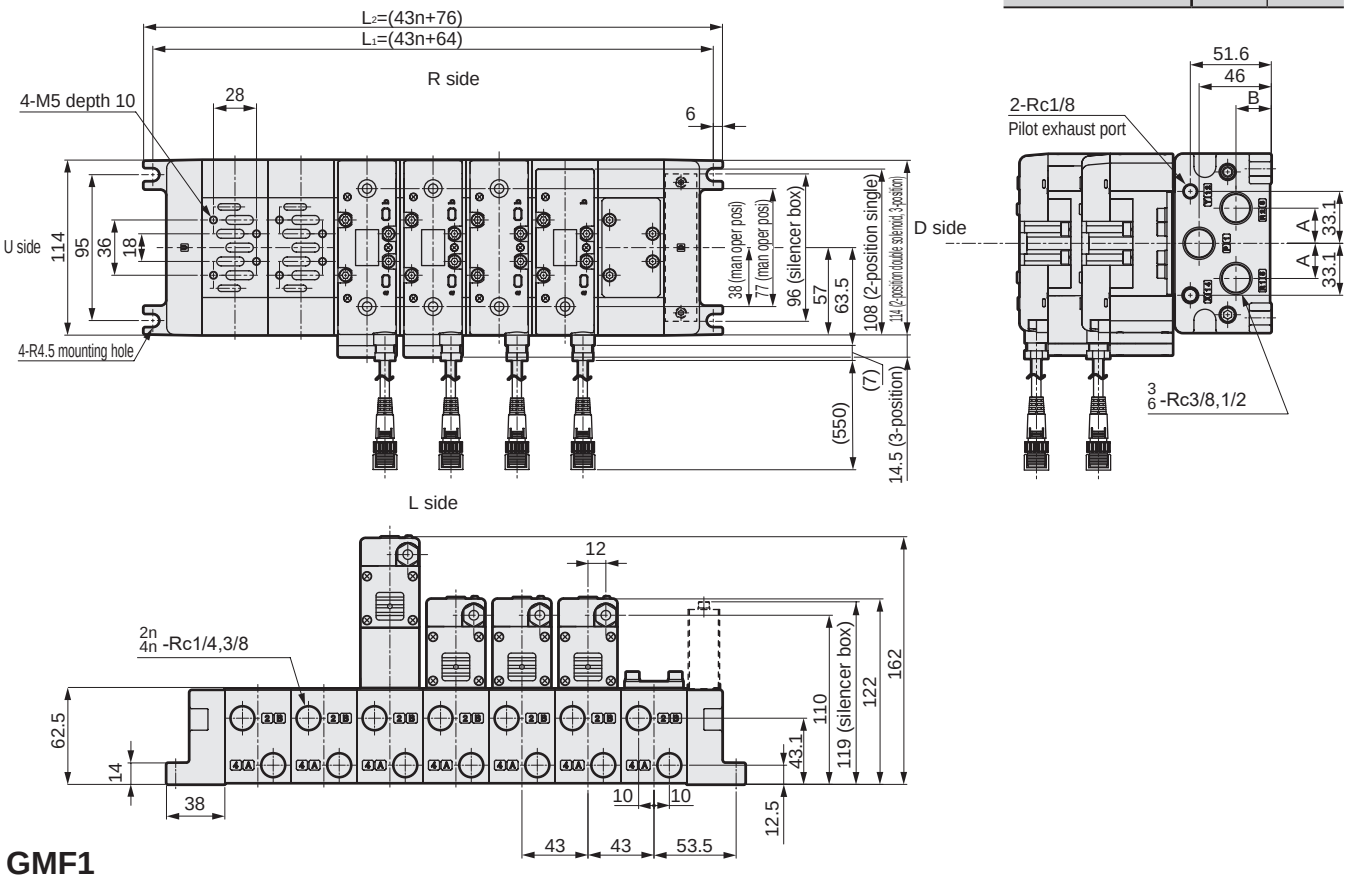

GMF1

● Individual exhaust

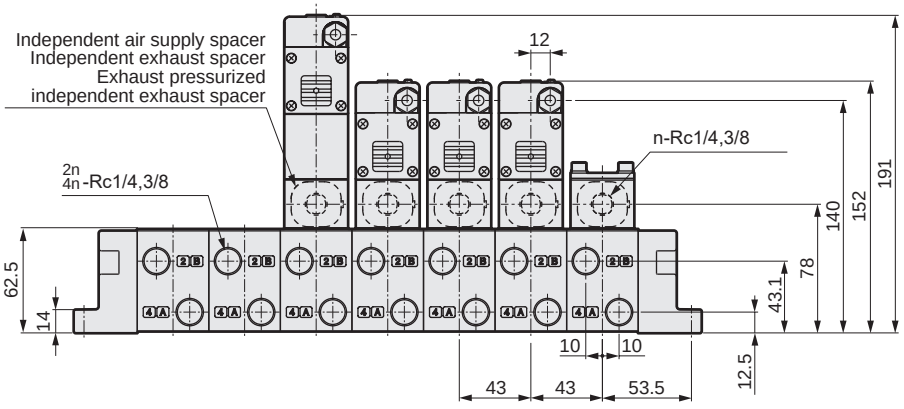

GMF1

● Rear piping

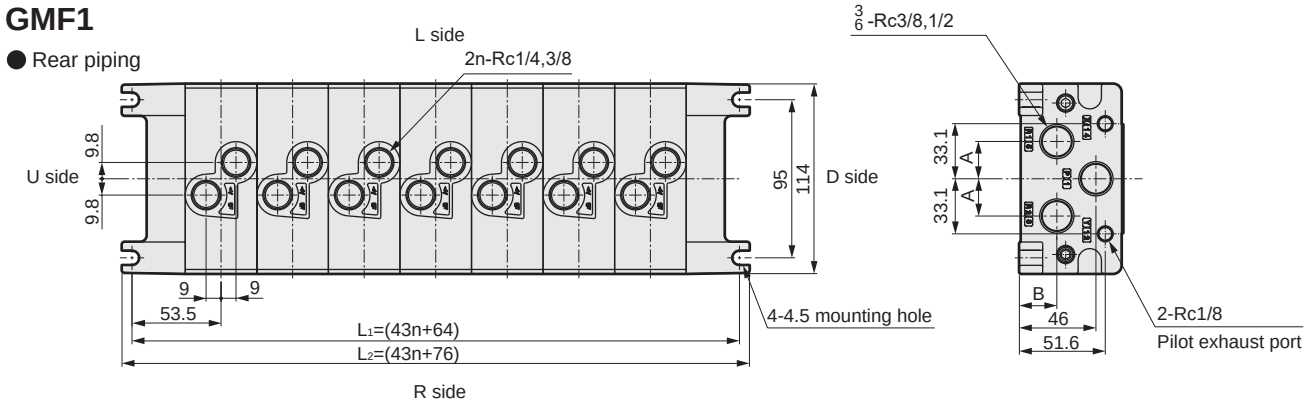

How to order

● Spacer regulator

CMF 1 -SR- A - T05 C

Ⓐ Size	
1	ISO size 1

Ⓑ Press reduction port position	
P	P port
A	A port
B	B port

Ⓒ Pressure gauge	
T05	MPa display (With limit marker)

Ⓓ Check valve	
Blank	None
C	Yes

List without check valve (blank) for SR-P and list with check valve (C) for SR-A and SR-B.

* Note that the direction of the pressure gauge is different with **CMF1-SR-A-T05C**.

CMF1-SR-P-T05
CMF1-SR-B-T05C

● Spacer regulator

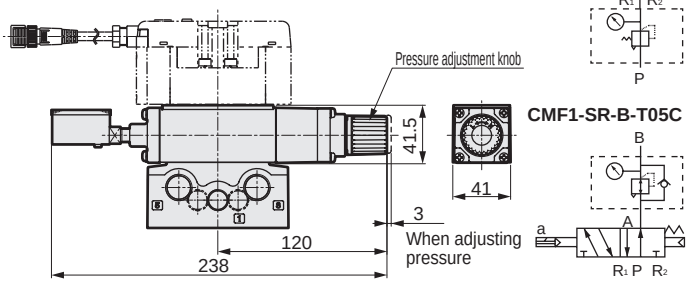

● JIS symbol

CMF1-SR-A-T05C

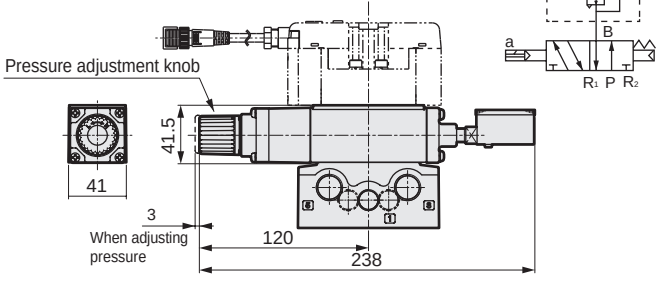

● JIS symbol

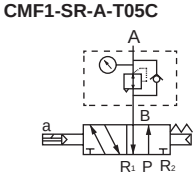

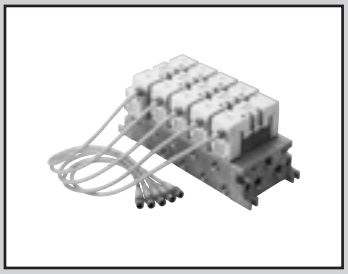

Individual wiring manifold ISO size 2
I/O connector
Pilot operated 5-port ISO valve

GMF2 Series

● Cylinder bore size: max. ø160

RoHS

Common specifications

Item	Description
Manifold method	Manifold integrated
Manifold	Common supply/common exhaust Common supply/individual exhaust Individual supply/common exhaust Individual supply/individual exhaust Different pressure supply
Station No.	1 to 10 stations
Valve and operation	Pilot operated soft spool valve
Working fluid	Compressed air
Max. working pressure MPa	1.0 (≈150 psi, 10 bar)
Min. working pressure MPa	0.15 (≈22 psi, 1.5 bar) 0.20 (≈29 psi, 2 bar) (3-position)
Proof pressure MPa	1.50 (≈220 psi, 15 bar)
Ambient temperature °C	-5 (23°F) to 60 (140°F) (no freezing)
Fluid temperature °C	5 (41°F) to 60 (140°F)
Lubrication	Not required
Degree of protection	Dust proof/jet proof (IP65 or equivalent)
Leakage cm^3/min (A, B→R port)	10 (ANR) or less 3-position all ports closed non-leaking only 0.3 (ANR) or less (*1)
Vibration resistance m/s^2	50 or less
Shock resistance m/s^2	300 or less
Atmosphere	Cannot be used in corrosive gas environment.

*1: The initial value is listed.

Electrical specifications

Item		Description
Rated voltage V	DC	24
Voltage fluctuation range		±10%
Power consumption W (Current value A)		1.2 (0.050) * Value for models with lamp.
Thermal class		B (molded coil)
Wiring method		I/O connector

Individual specifications

Item		GMF1
Port size	P/R1/R2 port	Rc1/2, Rc3/4
(*1)	A/B port	Rc3/8, Rc1/2

*1: As G and NPT threads can also be used for piping port screws, contact CKD for details.

Performance/Characteristics

Item			GMF1
Response time (*2) ms	2-position	Single	40 (ON), 60 (OFF)
		Double	40
	3-position		40 (when ON), 60 (when neutral)

*2: The response time is the value at 0.5 MPa working pressure, with no lubrication. It depends on the pressure and the lubricant quality.

Weight

Manifold base	Station No.	1	2	3	4	5	6	7	8	9	10
(kg)		2.30	3.17	4.04	4.91	5.79	6.66	7.53	8.40	9.27	10.14
Silencer box	Model No.	SB									
Added to manifold base assembly (kg)		0.17									
Spacer	Model No.	P		R		SR		PC			
(kg)		0.41		0.41		1.18		0.54			

Flow characteristics

Model No.	Port size	Solenoid position	P→A/B		A/B→R1/R2	
			C [$dm^3/(s \cdot bar)$]	b	C [$dm^3/(s \cdot bar)$]	b
GMF2	Rc3/8	2-position single	9.7	0.12	11.0	0.14
		2-position double	9.7	0.12	11.0	0.14
		3-position all ports closed	9.2	0.12	10.1	0.15
		3-position A/B/R connection	9.2	0.11	11.6	0.11
		3-position P/A/B connection	9.6	0.11	10.2	0.18
		3-position all ports closed non-leaking	6.2	-	5.9	-

*1: Effective cross-sectional area S and sonic conductance C are converted as S ≈ 5.0 x C.

How to order I/O connector

● ISO size 2

GMF 2 5 - 03 L - 04 B ☐ - SB F - ☐ ☐

Model No.

Ⓐ Station No.

Quantity of port size 03 of A/B port

Ⓑ A/B port size (*1)

Quantity of port size 04 of A/B port

Ⓒ A/B port position (*2)

Ⓓ P/R port size

Ⓔ P/R port position (*3) (*4)

Ⓕ HY configuration

Ⓖ Silencer box

Ⓗ Option

Code	Description	Model No. GMF2
Ⓐ Station No.		
1	1 station	●
to	to	
10	10 stations	
Ⓑ A/B port size		
03	Rc3/8	●
04	Rc1/2	●
HX2	Rc3/8 and Rc1/2 mixture	●
Ⓒ A/B port position		
Blank	Right	●
L	Left and right sides (select position with manifold specifications)	●
H	Left	●
Z	Rear side	●
T	Free selection (plug attached) (rear side not available)	●
Ⓓ P/R port size		
04	Rc1/2	●
06	Rc3/4	●
HY2	Rc1/2 and Rc3/4 mixture	●
Ⓔ P/R port position		
B	Top and bottom sides	●
D	Bottom side	●
U	Top side	●
E	P on top, R on bottom	●
F	P on bottom, R on top	●
T	Free selection (plug attached)	●
Ⓕ HY configuration		
Blank	When other than HY2 is selected with Ⓓ	●
DU	Rc1/2 on bottom, Rc3/4 on top	●
UD	Rc1/2 on top, Rc3/4 on bottom	●
Ⓖ Silencer box		
Blank	None	●
SB	Yes (D side installation)	●
Ⓗ Option		
Blank	None	●
F	P/A/B port filter integrated	●

The valve body must be prepared separately. For how to order valves, refer to page 1507. For arrangement of manifolds with valve bodies, **the manifold specifications sheet** on page 1525 **will be necessary** in addition to each model No.

⚠ Precautions for model No. selection

*1: HX is a mixture of bore sizes. Contact CKD for details.
*2: The instructions of Ⓒ indicate the port positions. Those other than the instructions will all be plugs.
*3: The instructions of Ⓔ indicate the port positions. The opposite side of the instructions will be plugs.
*4: When Ⓖ is with silencer box, this will be position selection for the P-port which can be selected from B, D, U, and T. The R port is assembled with a plug for both the top and bottom.

[Example of model No.]

GMF25-03L-04B-SBF

Model: Manifold ISO size 2

Ⓐ Station No. : 5 stations
Ⓑ Ⓒ A/B port : Rc3/8 (left and right both sides piping)
Ⓓ Ⓔ P/R port : Rc1/2 (top and bottom both sides piping)
Ⓖ Silencer box : Yes (D side installation)
Ⓗ Option : P/A/B-port filter integrated

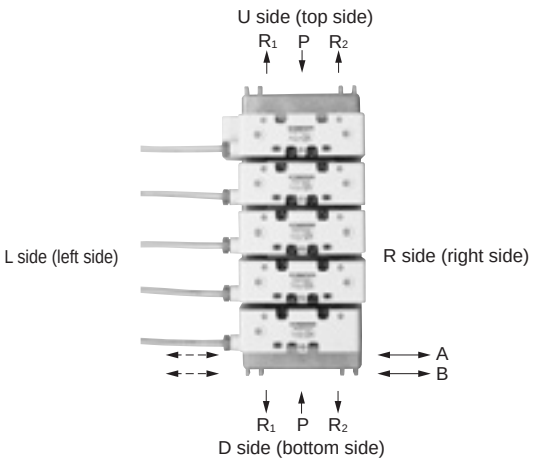

Dimensions: I/O connector

GMF2

● Common exhaust

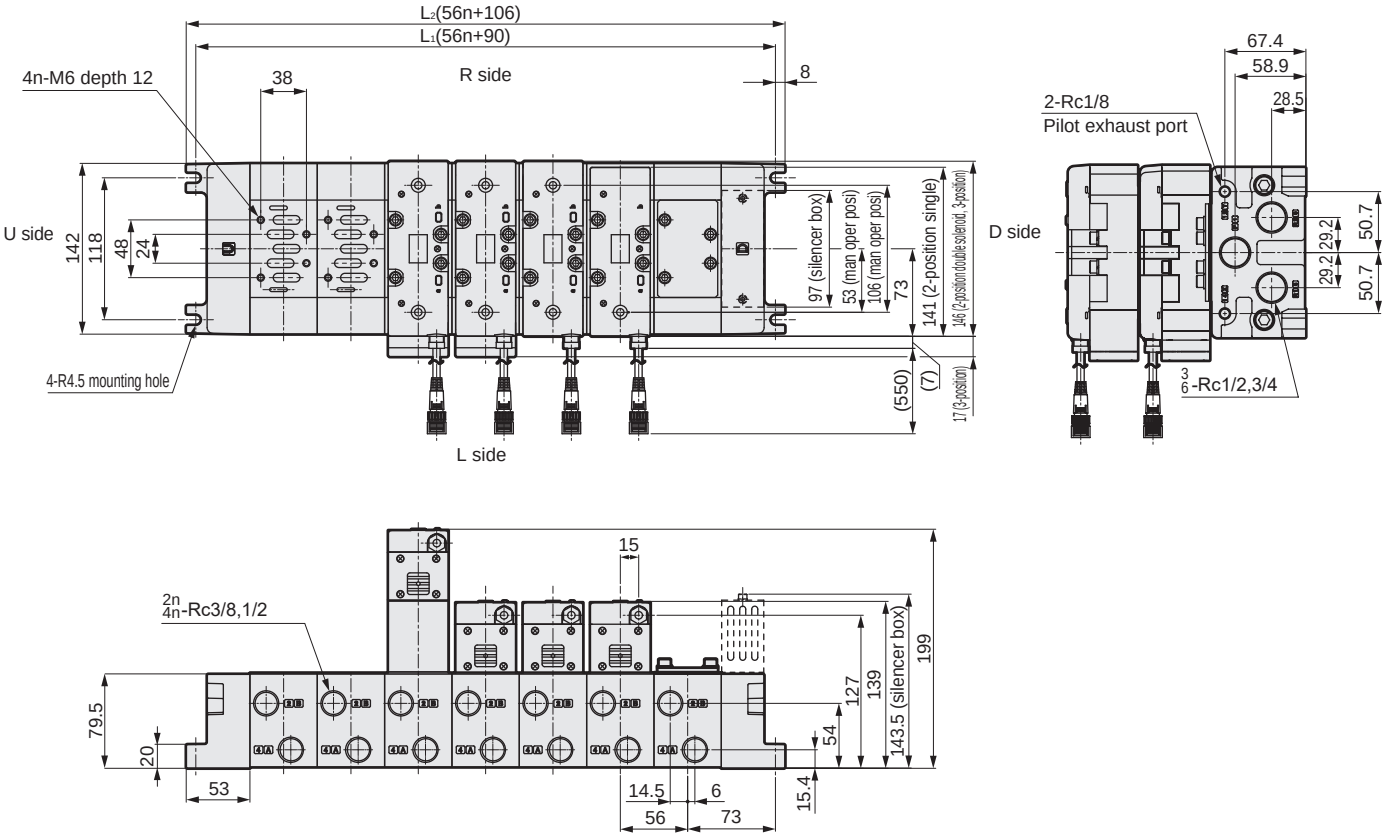

GMF2

● Individual exhaust

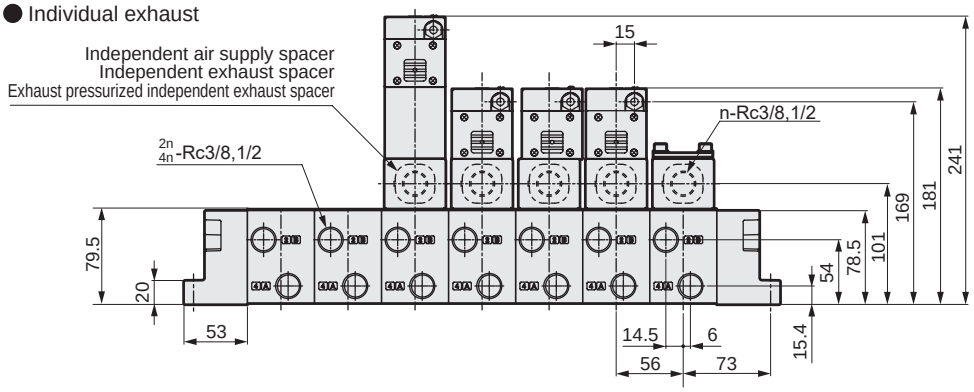

GMF2

● Rear piping

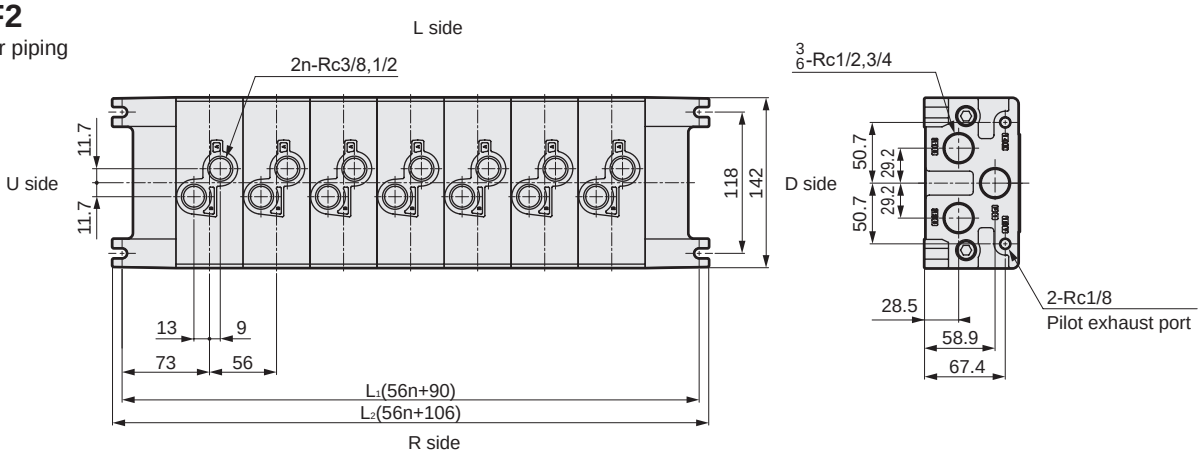

How to order

● Spacer regulator

CMF 2 - SR - A - T05 C

Ⓐ Size	
2	ISO size 2

Ⓑ Press reduction port position	
P	P port
A	A port
B	B port

Ⓒ Pressure gauge	
T05	MPa display (With limit marker)

Ⓓ Check valve	
Blank	None
C	Yes

SR-P is a check valve No (blank), list with check valve (C) for SR-A and SR-B.

* Note that the direction of the pressure gauge is different with **CMF2-SR-A-T05C**.

CMF2-SR-P-T05
CMF2-SR-B-T05C

● Spacer regulator

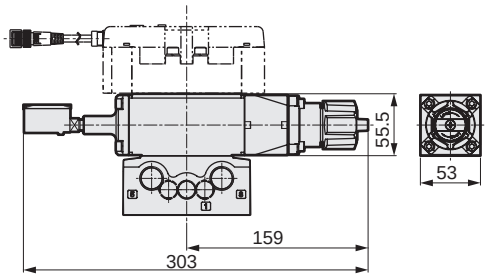

● JIS symbol

CMF2-SR-P-T05

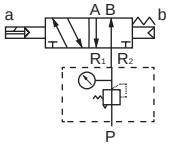

CMF2-SR-B-T05C

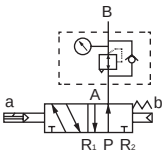

CMF2-SR-A-T05C

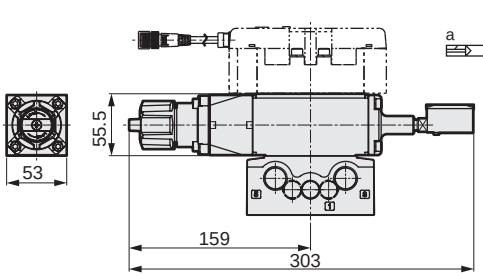

● JIS symbol

CMF2-SR-A-T05C

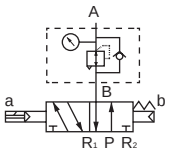

How to order I/O connector

GMFZ 5 - HX3 L - HY3 B DU F - ○○

- GMFZ: ISO size 1/2 mix manifolds
- 5: Ⓐ Station No.
- HX3: Ⓑ A/B port size
- L: Ⓒ A/B port position (*1)
- HY3: Ⓓ P/R port size
- B: Ⓔ P/R port position (*2)
- DU: Ⓕ HY configuration
- ○○: Ⓖ Option (Quantity of size 1, Quantity of size 2)

Code	Description	Model No. GMFZ
Ⓐ Station No.		
2	2 stations	●
to	to	●
10	10 stations	●
Ⓑ A/B port size		
HX3	Size 1: 02/size 2: 03	●
HX4	Size 1: 02/size 2: 04	●
HX5	Size 1: 03/size 2: 03	●
HX6	Size 1: 03/size 2: 04	●
Ⓒ A/B port position		
Blank	Right	●
L	Left and right sides (select position with manifold specifications)	●
H	Left	●
Z	Rear side	●
T	Free selection (plug attached) (rear side not available)	●
Ⓓ P/R port size		
HY3	Size 1: 03/size 2: 04	●
HY4	Size 1: 03/size 2: 06	●
HY5	Size 1: 04/size 2: 04	●
HY6	Size 1: 04/size 2: 06	●
Ⓔ P/R port position		
B	Top and bottom sides	●
D	Bottom side	●
U	Top side	●
E	P on top, R on bottom	●
F	P on bottom, R on top	●
T	Free selection (plug attached)	●
Ⓕ HY configuration		
DU	Smaller bore size on bottom, larger bore size on top or 1 on bottom, 2 on top	●
UD	Smaller bore size on top, larger bore size on bottom or 1 on top, 2 on bottom	●
Ⓖ Option		
Blank	None	●
F	P/A/B port filter integrated	●

Precautions for model No. selection

*1: Instructions of Ⓒ will be port positions. Those other than the instructions will all be plugs.

*2: Instructions of Ⓔ will be port positions. The opposite side of the instructions will be plugs.

The valve body must be prepared separately. For how to order valves, refer to pages 1501 and 1507. For arrangement of manifolds with valve bodies, **the manifold specifications sheet** on page 1526 **will be necessary** in addition to each model No.

No	Item	Model No.	Fig.	Remarks
1	ISO sizes 1/2 mix block	**GMFBZ-00L**	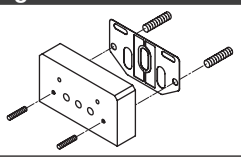	U side size 1 D side size 2 For mixed block With bolts and gasket
		GMFBZ-00R	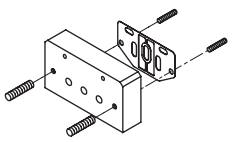	U side size 2 D side size 1 For mixed block With bolts and gasket

Mix manifold outline drawing

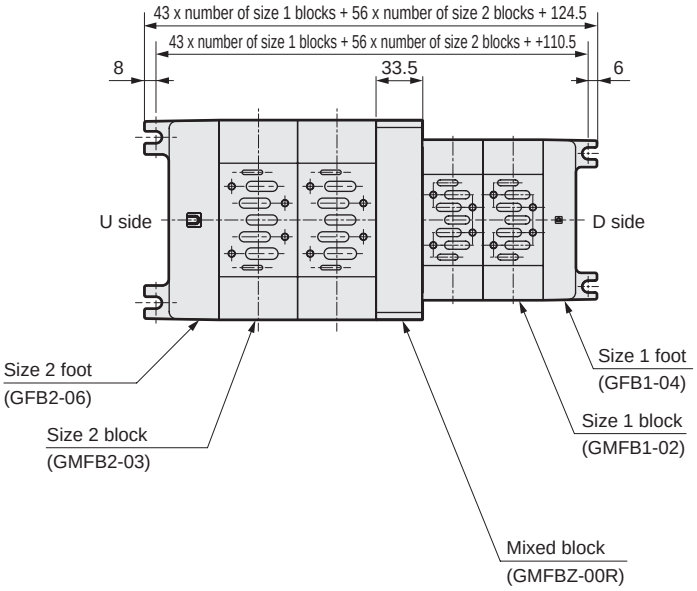

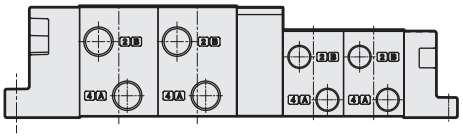

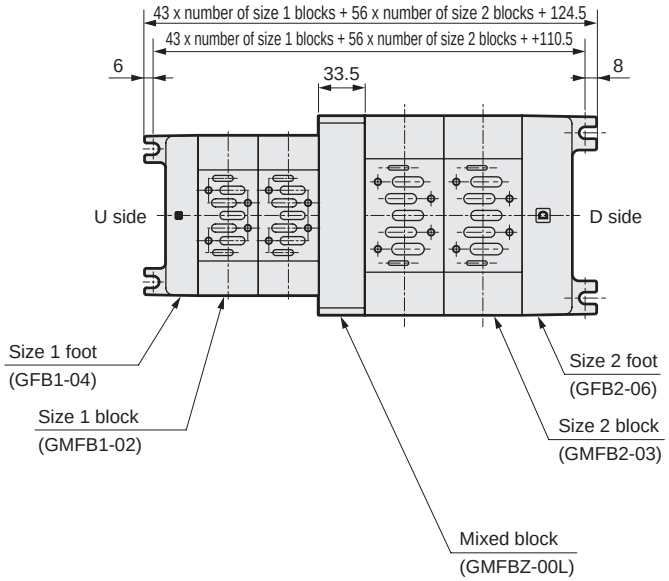

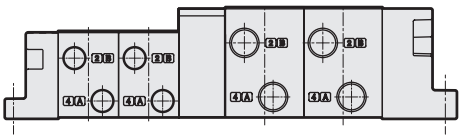

* The dimensions for the size 1/2 feet and the types of blocks are as listed on pages 1514 and 1518.

Manifold option

Optional descriptions	Model No.		Remarks
	ISO size 1	ISO size 2	
1. Independent air supply spacer 	CMF1-P-02 (Rc1/4) 03 (Rc3/8)	CMF2-P-03 (Rc3/8) 04 (Rc1/2)	1. For individual air supply port Clamp/used for differing pressures 2. For exhaust pressurization Individual exhaust
2. Independent exhaust spacer 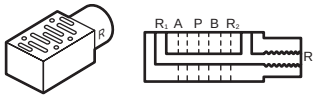	CMF1-R-02 (Rc1/4) 03 (Rc3/8)	CMF2-R-03 (Rc3/8) 04 (Rc1/2)	1-port exhaust with individual exhaust (back pressure countermeasures)
3. Adaptor 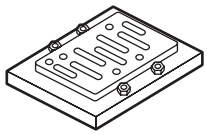	CU1-00 (FS/FD2 Series, Rc1/4, 3/8) CU1-01 (FS/FD3 Series, Rc1/4, 3/8, 1/2)	CU2-00 (FS/FD3 Series, Rc1/4, 3/8, 1/2) CU2-01 (FS/FD4 Series, Rc1/2, 3/4)	PV5-6R, PV5-8R are installed on conventional model type F $^{S2}_{D3}$ (Custom order product).
4. Masking plate 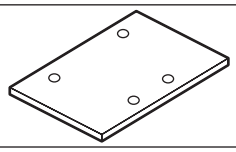	CM1-00	CM2-00	For PV5-6R For PV5-8R For discrete masking
5. Flow path cutoff plate 	GM1-01	GM2-01	Manifold (GMF1/GMF2) P/R_1/R_2 port For masking
6. Base gasket 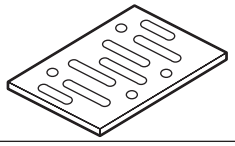	PV5G-6-BASE-GASKET	PV5G-8-BASE-GASKET	For PV5-6R For PV5-8R These cannot be used on the bottom surface of the spacers.
	PV5-6-BASE-GASKET	PV5-8-BASE-GASKET	For the bottom surface of spacers
7. Mounting screw 	CMF1-M5X35	CMF2-M6X45	Set of 4
8. Spacer regulator 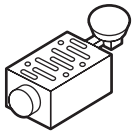	CMF1-SR-P-T05 CMF1-SR-A-T05C CMF1-SR-B-T05C Model No. selection page 1515	CMF2-SR-P-T05 CMF2-SR-A-T05C CMF2-SR-B-T05C Model No. selection page 1519	Use with different pressures
9. Air pilot check valve 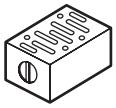	CMF1-PC	CMF2-PC	Retain custom position of cylinder
10. Foot U side 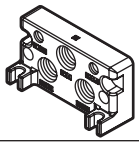	GFB1- $^{03}_{04}$ U	GFB2- $^{04}_{06}$ U	2 hexagon socket head cap screws, plugs, and a gasket on the U side foot are attached.
D side	GFB1- $^{03}_{04}$ D	GFB2- $^{04}_{06}$ D	
11. Manifold; block 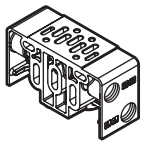	GMFB1- $^{02}_{03}$ T	GMFB2- $^{03}_{04}$ T	For left/right side piping 2 tie rods, plug and gasket are attached.
	GMFB1- $^{02}_{03}$ Z	GMFB2- $^{03}_{04}$ Z	For rear side piping 2 tie rods and gasket are attached.
12. Tie rod 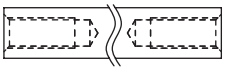	GMF1-TR-V*1 *1: 1 to 10 (station No.)	GMF2-TR-V*1 *1: 1 to 10 (station No.)	Set of 2 Tie rod length from 1 to 10 stations as used at shipping.
13. Tie rod for station expansion 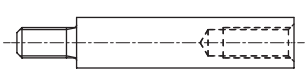	GMF1-TR-VZ	GMF2-TR-VZ	Set of 2 Use when adding onto the tie rods. Length can be added by 1 station.

Manifold

A wide variety of combinable supply, exhaust, and piping methods are available in the lineup.
Select the ideal function for your application.

1 General use

● Common exhaust method

The most common method, in which solenoid valve supply and exhaust is centralized in one location through the use of P (supply) and R (exhaust) ports passing through the connected manifold block interior.

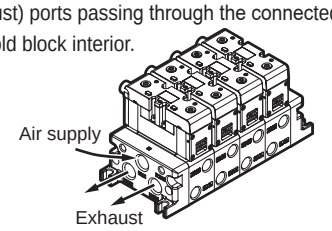

2 Applications for general use

● Individual exhaust method

As the R1/2 (exhaust) ports are independent for each solenoid valve, this prevents the popping out phenomenon of adjacent cylinders caused by back pressure.
Exhaust is processed individually by inserting an independent exhaust spacer (CMF1-R-*) between the manifold block and the valve body.

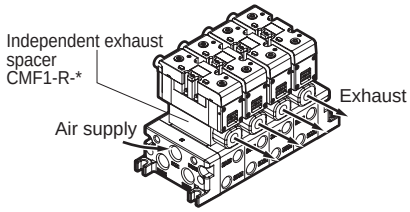

● Individual supply method

As the P (air supply) port is independent for each valve, it is possible to supply a different pressure only to certain valves within the manifold.
Air supply is processed individually by inserting an independent air supply spacer (CMF1-P-*) between the manifold block and the valve body.

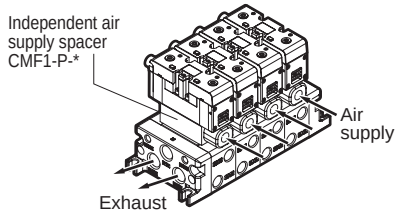

● Individual supply/individual exhaust method

Use this method in order to allow individual configurations for the P (air supply) port and R (exhaust) port of certain valves within the manifold.
Example: When the unit is being used with no lubrication but a certain valve alone must be lubricated

Air supply and exhaust are processed individually by inserting an independent air supply spacer (CMF1-P-*) and an independent exhaust spacer (CMF1-R-*) between the manifold block and the valve body.

● Different pressure supply method

With this method of supplying both higher and lower pressure to a single manifold, a flow path cutoff plate (GM1-01) is inserted between the manifold blocks with different pressures.

3 General/special common descriptions

● Rear piping method

When piping cannot be installed from the side, it is possible to install all or part of the piping of A/B ports from the bottom surface of the manifold.

Manifold specifications sheet

ISO size 1 I/O connector

Issued / /

Company

Contact

Order No.

● Contact ● Quantity Set ● Delivery date /

Slip No.	Order No.

● Manifold model No.

GMF 1 □ - □ □ - □ □ □ - □ - □ -TC

Ⓐ ISO size | Ⓑ Station No. | Ⓒ A/B Port size | Ⓓ A/B Port position | Ⓔ P/R Port size | Ⓕ P/R Port position | Ⓖ HY configuration | Ⓗ Silencer box | Ⓘ Manifold option | Ⓙ Valve option

Ⓐ ISO size		Ⓑ Station No.		Ⓒ A/B Port size		Ⓓ A/B Port position		Ⓔ P/R Port size		Ⓕ P/R Port position		Ⓖ HY configuration		Ⓗ Silencer box		Ⓘ Manifold option		Ⓙ Valve option	
1	PV5-6R	1	1 station	02	Rc1/4	Blank	Right	03	Rc3/8	B	Top/bottom sides	Blank	When other than HY is selected with Ⓔ	Blank	None	Blank	None	Blank	None
		to	to	03	Rc3/8	L	Left/right sides	04	Rc1/2	D	Bottom side			SB	Yes (D installation)	F	P/A/B port filter equipped	A	Coolant proof
		10	10 stations	HX1	Rc1/4 / Rc3/8 mixture	H	Left	HY1	Rc3/8 / Rc1/2 mixture	U	Top side	DU	Rc3/8 on bottom, Rc1/2 on top						
						Z	Rear side			E	P: top/R: bottom								
						T	Plug attached			F	P: bottom/R: top	UD	Rc3/8 on top, Rc1/2 on bottom						
										T	Plug attached								

Note: Item ❶ is when the manifold is assembled and the mounted valve option has been selected.

⚠ Only available with rated voltage of 24 VDC and with surge suppressor and lamp.

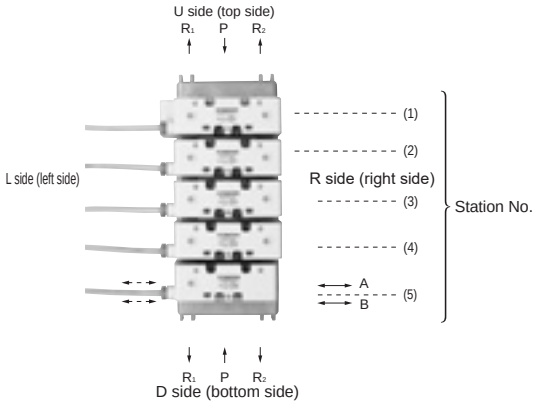

★ When placing an order, list the solenoid valve model No. (1) to (6), (9) from the figure at left in the following field for the solenoid valve model No.
When selecting options, mark the corresponding field for the option below with a circle.

Station No			1	2	3	4	5	6	7	8	9	10
Solenoid valve model No.	PV5-6R											
When L has been selected with Ⓓ, designate the plug position		R										
		L										
Option	Air supply spacer											
	Exhaust spacer											
	Pilot check valve											
	Spacer regulator	CMF*-SR-P										
		CMF*-SR-A										
		CMF*-SR-B										
	Flow path cutoff plate	Air supply path cutoff plate										
		Exhaust path cutoff plate										
	When Ⓒ is HX, specify the mixed configuration of the bore size.	02										
		03										

Solenoid valve model No.			
2-position single	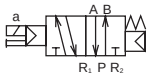	PV5-6R-FG-S-TC	(1)
2-position double		PV5-6R-FG-D-TC	(2)
3-position all ports closed	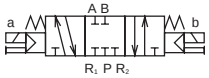	PV5-6R-FHG-D-TC	(3)
3-position A-B-R connection	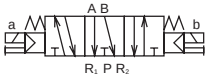	PV5-6R-FJG-D-TC	(4)
3-position P-A-B connection	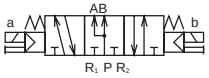	PV5-6R-FIG-D-TC	(5)
3-position all ports closed non-leaking	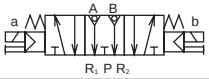	PV5-6R-FPG-D-TC	(6)
Masking plate		CM1-00	(9)

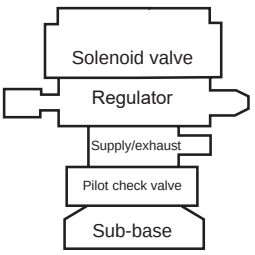

Order of assembly of options (spacers)

Note) The order from the sub-base to the solenoid valve is basically as shown in the figure at left. For spacers not in use, simply remove them and stack the rest as shown in the figure.

Manifold specifications sheet

ISO size 2 I/O connector

Issued / /

Company

Contact

Order No.

● Contact ● Quantity Set ● Delivery date /

Slip No.	Order No.

● Manifold model No.

GMF 2 □ - □ □ - □ □ □ - □ - □ -TC

Ⓐ ISO size | Ⓑ Station No. | Ⓒ A/B Port size | Ⓓ A/B Port position | Ⓔ P/R Port size | Ⓕ P/R Port position | Ⓖ HY configuration | Ⓗ Silencer box | Ⓘ Manifold option | Ⓙ Valve option

Ⓐ ISO size		Ⓑ Station No.		Ⓒ A/B Port size		Ⓓ A/B Port position		Ⓔ P/R Port size		Ⓕ P/R Port position		Ⓖ HY configuration		Ⓗ Silencer box		Ⓘ Manifold option		Ⓙ Valve option	
2	PV5-8R	1	1 station	03	$Rc^{3}/_{8}$	Blank	Right	04	$Rc^{1}/_{2}$	B	Top/bottom sides	Blank	When other than HY is selected with Ⓔ	Blank	None	Blank	None	Blank	None
		to	to	04	$Rc^{1}/_{2}$	L	Left/right sides	06	$Rc^{3}/_{4}$	D	Bottom side			SB	Yes (D installation)	F	P/A/B port filter equipped	A	Coolant proof
		10	10 stations	HX2	$Rc^{3}/_{8}$ / $Rc^{1}/_{2}$ mixture	H	Left	HY2	$Rc^{1}/_{2}$ / $Rc^{3}/_{4}$ mixture	U	Top side	DU	$Rc^{1}/_{2}$ on bottom, $Rc^{3}/_{4}$ on top						
						Z	Rear side			E	P: top/R: bottom								
						T	Plug attached			F	P: bottom/R: top	UD	$Rc^{1}/_{2}$ on top, $Rc^{3}/_{4}$ on bottom						
										T	Plug attached								

Note: Item ❾ is when the manifold is assembled and the mounted valve option has been selected.

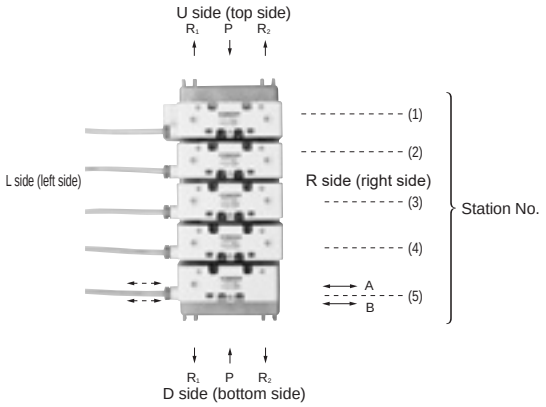

⚠ Only available with rated voltage of 24 VDC and with surge suppressor and lamp.

★ When placing an order, list the solenoid valve model No. (1) to (6), (9) from the figure at left in the following field for the solenoid valve model No. When selecting options, mark the corresponding field for the option below with a circle.

Station No			1	2	3	4	5	6	7	8	9	10
Solenoid valve model No.	PV5-8R											
When L has been selected with Ⓓ, designate the plug position		R										
		L										
Option	Air supply spacer											
	Exhaust spacer											
	Pilot check valve											
	Spacer regulator	CMF*-SR-P										
		CMF*-SR-A										
		CMF*-SR-B										
	Flow path cutoff plate	Air supply path cutoff plate										
		Exhaust path cutoff plate										
	When Ⓒ is HX, specify the mixed configuration of the bore size.	03										
		04										

Solenoid valve model No.

2-position single		PV5-8R-FG-S-TC	(1)
2-position double		PV5-8R-FG-D-TC	(2)
3-position all ports closed	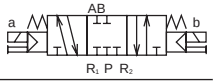	PV5-8R-FHG-D-TC	(3)
3-position A-B-R connection		PV5-8R-FJG-D-TC	(4)
3-position P-A-B connection	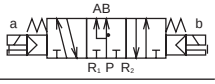	PV5-8R-FIG-D-TC	(5)
3-position all ports closed non-leaking	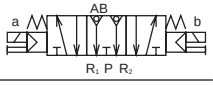	PV5-8R-FPG-D-TC	(6)
Masking plate		CM2-00	(9)

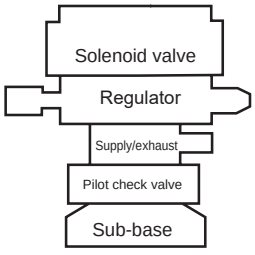

Order of assembly of options (spacers)

Note) The order from the sub-base to the solenoid valve is basically as shown in the figure at left. For spacers not in use, simply remove them and stack the rest as shown in the figure.

Manifold specifications sheet

ISO size 1/2 mixture I/O connector

Issued / /

Company

Contact

Order No.

● Contact ● Quantity Set ● Delivery date /

Slip No.	Order No.

● Manifold model No.

GMF Z □ - □ □ - □ □ □ □ - □ -TC

Ⓐ ISO size · Ⓑ Station No. · Ⓒ A/B Port size · Ⓓ A/B Port position · Ⓔ P/R Port size · Ⓕ P/R Port position · Ⓖ HY configuration · Ⓗ Manifold option · Ⓘ Valve option

Ⓐ ISO size	Ⓑ Station No.	Ⓒ A/B Port size	Ⓓ A/B Port position	Ⓔ P/R Port size	Ⓕ P/R Port position	Ⓖ HY configuration	Ⓗ Manifold option	Ⓘ Valve option
Z Mixture of size 1 and 2	1 1 station	HX3 1:02/2:03	Blank Right	HY3 1:03/2:04	B Top/bottom sides	DU Size 1 on bottom and size 2 on top	Blank None	Blank None
	to to	HX4 1:02/2:04	L Left/right sides	HY4 1:03/2:06	D Bottom side		F P/A/B port filter equipped	A Coolant proof
	10 10 stations	HX5 1:03/2:03	H Left	HY5 1:04/2:04	U Top side	UD Size 1 on top and size 2 on bottom		
		HX6 1:03/2:04	Z Rear side	HY6 1:04/2:06	E P: top/R: bottom			
			T Plug attached		F P: bottom/R: top			
					T Plug attached			

Note: Item Ⓘ is when the manifold is assembled and the mounted valve option has been selected.

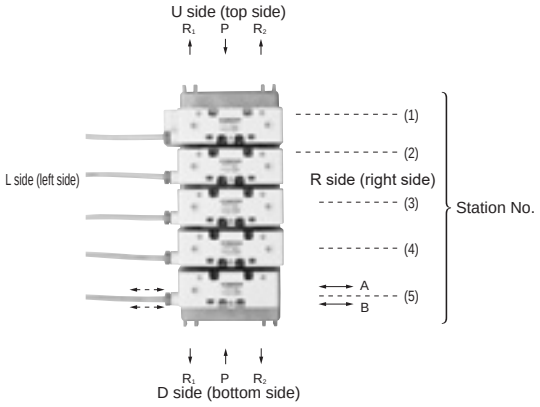

⚠ Only available with rated voltage of 24 VDC and with surge suppressor and lamp.

★ When placing an order, list the solenoid valve model No. (1) to (6), (9) from the figure at left in the following field for the solenoid valve model No. When selecting options, mark the corresponding field for the option below with a circle.

Station No			1	2	3	4	5	6	7	8	9	10
Solenoid valve model No.	PV5-6R											
	PV5-8R											
When L has been selected with Ⓓ, designate the plug position		R										
		L										
Option	Air supply spacer											
	Exhaust spacer											
	Pilot check valve											
	Spacer regulator	CMF*-SR-P										
		CMF*-SR-A										
		CMF*-SR-B										
	Flow path cutoff plate	Air supply path cutoff plate										
		Exhaust path cutoff plate										
	When Ⓒ is HX, specify the mixed configuration of the bore size.	02										
		03										
		04										

	Solenoid valve model No.	
2-position single	PV5-*R-FG-S-TC	(1)
2-position double	PV5-*R-FG-D-TC	(2)
3-position all ports closed	PV5-*R-FHG-D-TC	(3)
3-position A-B-R connection	PV5-*R-FJG-D-TC	(4)
3-position P-A-B connection	PV5-*R-FIG-D-TC	(5)
3-position all ports closed non-leaking	PV5-*R-FPG-D-TC	(6)
Masking plate	CM*-00	(9)

Note) The * marking for solenoid valve is either “6” or “8”. With the masking plate and options, this will be either “1” or “2”.

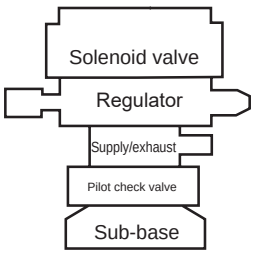

Order of assembly of options (spacers)

Note) The order from the sub-base to the solenoid valve is basically as shown in the figure at left. For spacers not in use, simply remove them and stack the rest as shown in the figure.

PV5S-0

ISO compliant master valve

Pilot operated 5-port valve

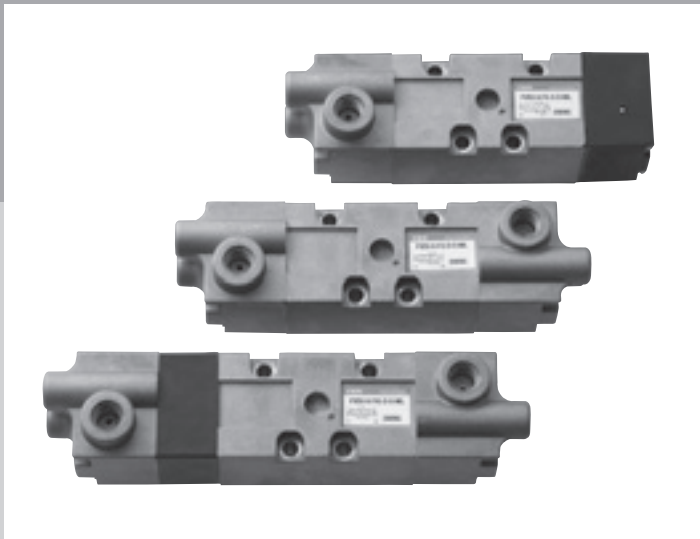

No need to install an indicator
Easy to check the operation of the valve

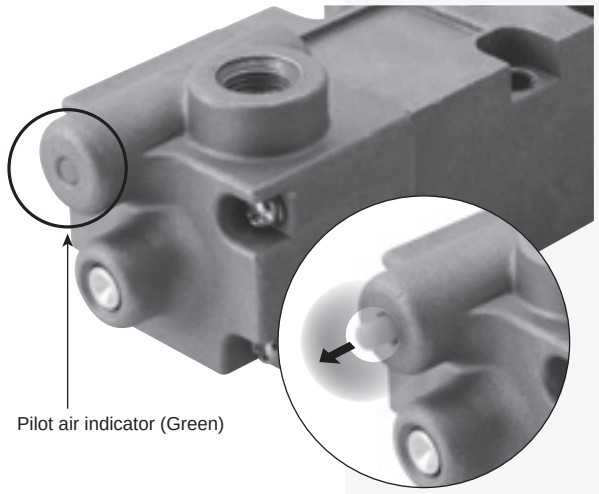

* Indicator protrudes when pilot air is supplied.

Easily visible

The operating status can be clearly seen from both top and side.

Reduced installation steps

As it is equipped with an air indicator, there is no need to install one.

Direct operation without air

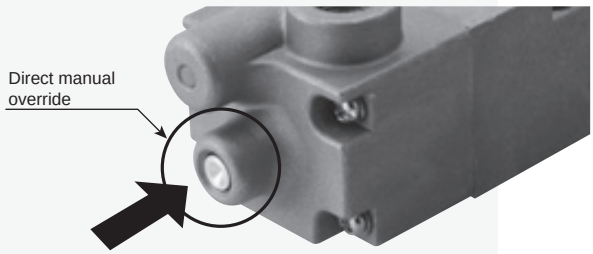

Switching is possible by pressing the spool even with no pilot air supplied.

Reduces occupied space

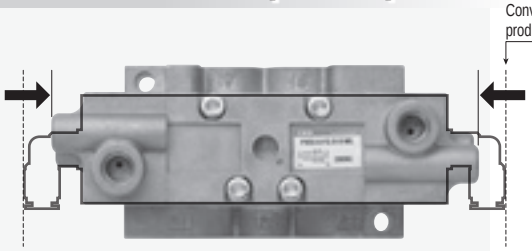

Occupied space reduced by 16% compared with conventional model (PV5-6 Double)

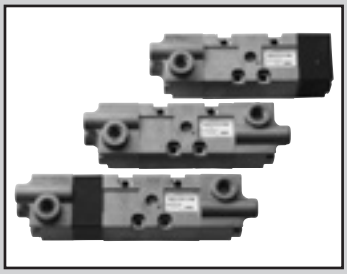

ISO compliant master valve

PV5S-0 Series

● Cylinder bore size: max. ø100 (PV5S-6-0)
max. ø160 (PV5S-8-0)

RoHS

JIS symbol

● 5-port valve

2-position single (FG-S)

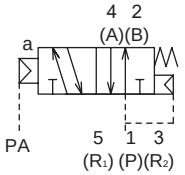

2-position double (FG-D)

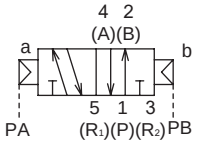

3-position all ports closed (FHG)

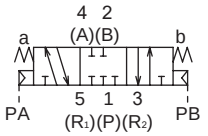

3-position A/B/R connection (FJG)

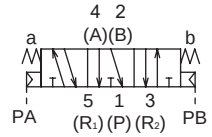

3-position P/A/B connection (FIG)

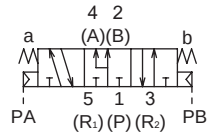

Specifications

Item	Description
Valve and operation	Pilot operated soft spool valve
Working fluid	Compressed air
Max. working pressure MPa	1.0 (≈150 psi, 10 bar)
Min. working pressure MPa	Refer to main pressure section in the table below
Proof pressure MPa	1.50 (≈220 psi, 15 bar)
Ambient temperature °C	-5 (23°F) to 60 (140°F) (no freezing)
Fluid temperature °C	5 (41°F) to 60 (140°F)
Lubrication	Not required
Vibration resistance m/s^2	50 or less
Shock resistance m/s^2	300 or less
Atmosphere	Cannot be used in corrosive gas environment.

Individual specifications

1 MPa ≈ 145.0 psi, 1 MPa = 10 bar

Model No.	Solenoid position	Pilot port PA/PB	Main pressure [MPa]	Pilot pressure [MPa]
PV5S-6	2-position single	Rc1/8	0.15 to 1.0	(0.6 x main pressure + 0.06) to 1.0
	2-position double		0 (≈0 psi, 0 bar) to 1.0 (≈150 psi, 10 bar)	0.15 to 1.0
	3-position all ports closed			0.25 to 1.0
	3-position A/B/R connection			
	3-position P/A/B connection			
PV5S-8	2-position single	Rc1/8	0.15 to 1.0	(0.6 x main pressure + 0.06) to 1.0
	2-position double		0 (≈0 psi, 0 bar) to 1.0 (≈150 psi, 10 bar)	0.15 to 1.0
	3-position all ports closed			0.25 to 1.0
	3-position A/B/R connection			
	3-position P/A/B connection			

Weight

Model No.	Solenoid position	Weight [kg]
PV5S-6	2-position single	0.31
	2-position double	0.36
	3-position	0.39
PV5S-8	2-position single	0.48
	2-position double	0.52
	3-position	0.56

*1: The weight listed is the weight without the sub-plate and option code ML.

Flow characteristics

C[dm^3/(s·bar)]

Model No.	Solenoid position	P ⇒ A/B	A/B ⇒ R
PV5S-6	2-position single	4 or more	4 or more
	2-position double		
	3-position all ports closed		
	3-position A/B/R connection		
	3-position P/A/B connection		
PV5S-8	2-position single	9 or more	9 or more
	2-position double		
	3-position all ports closed		
	3-position A/B/R connection		
	3-position P/A/B connection		

*2: Effective cross-sectional area S and sonic conductance C are converted as S ≈ 5.0 x C.

How to order

PV5S - 6 - FG-S - 0 - ML - A02

- PV5S: Model No.
- 6: ISO size 1: 6, ISO size 2: 8
- FG-S: Ⓐ Solenoid position
- 0: Master valve
- ML: Ⓑ Option
- A02: Ⓒ Sub-plate

Code	Description	Model No. PV5S-6	Model No. PV5S-8
Ⓐ Solenoid position			
FG-S	2-position single	●	●
FG-D	2-position double	●	●
FHG-D	3-position all ports closed	●	●
FJG-D	3-position ABR connection	●	●
FIG-D	3-position PAB connection	●	●
Ⓑ Option			
M	With direct manual override	●	●
ML	With direct manual override, with pilot air indicator	●	●
Ⓒ Sub-plate			
Blank	Without sub-plate	●	●
A02	Side piping Rc1/4 (Rc3/8 for R port only)	●	
A03	Side piping Rc3/8 (with PV5S-8, Rc1/2 for R port only)	●	●
A04	Side piping (Rc1/2)		●
A06	Side piping (Rc3/4)		●

ISO size 1 sub-plate specifications and how to order

CB1 - A02

- A02: Ⓐ Piping connection method

Code	Type	P/A/B port	R1/R2 port	Weight (kg)
Ⓐ Piping connection method				
A02	Side piping	Rc1/4	Rc 3/8	0.27
A03		Rc3/8		

ISO size 2 sub-plate specifications and how to order

CB2 - A03

- A03: Ⓐ Piping connection method

Code	Type	P/A/B port	R1/R2 port	Weight (kg)
Ⓐ Piping connection method				
A03	Side piping	Rc3/8	Rc1/2	0.49
A04		Rc1/2		
A06		Rc3/4	Rc3/4	1.40

These master valves (PV5S-0 series) are not available for shipment with manifold.
When using with a manifold, separately purchase the GMF series.
Refer to pages 1484 to 1495 for details on the GMF series.

Dimensions: ISO size 1 (without sub-plate)

PV5S-6-FG-S-0-*

● 2-position single

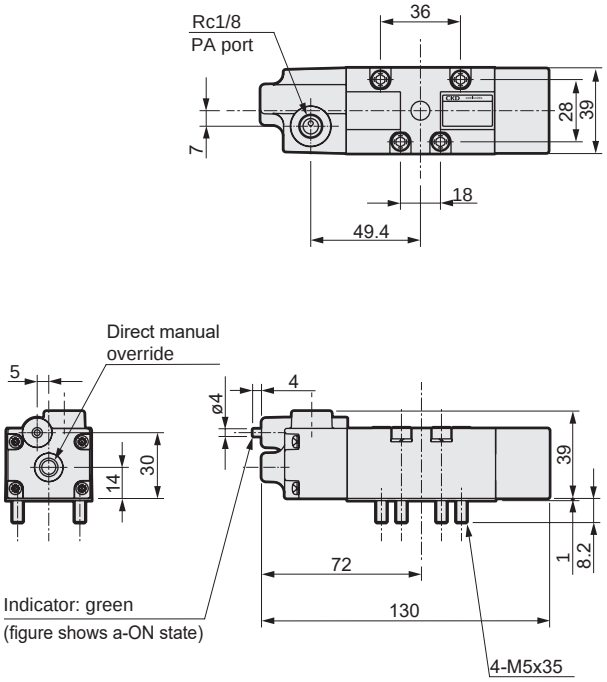

PV5S-6-FG-D-0-*

● 2-position double

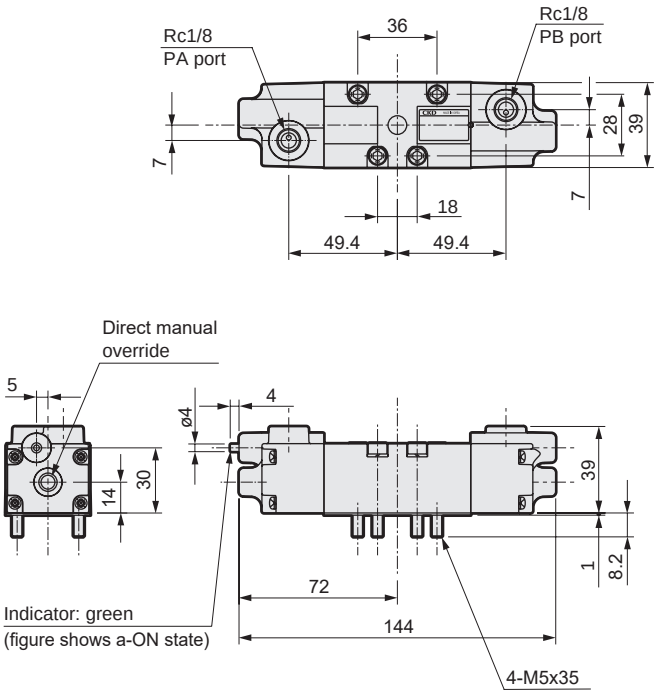

PV5S-6-FHG-D-0-*
PV5S-6-FJG-D-0-*
PV5S-6-FIG-D-0-*

● 3-position

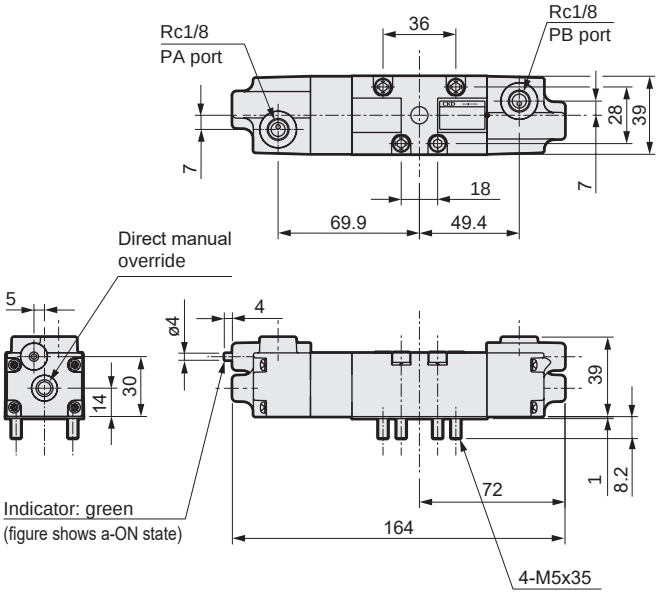

Dimensions: ISO size 1 (with sub-plate)

PV5S-6-FG-S-0-*-A0*

● 2-position single

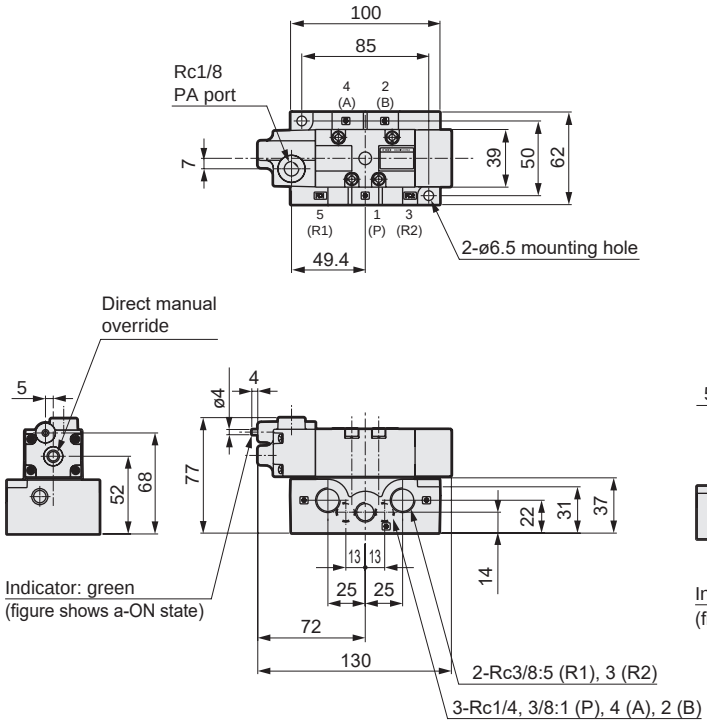

PV5S-6-FG-D-0-*-A0*

● 2-position double

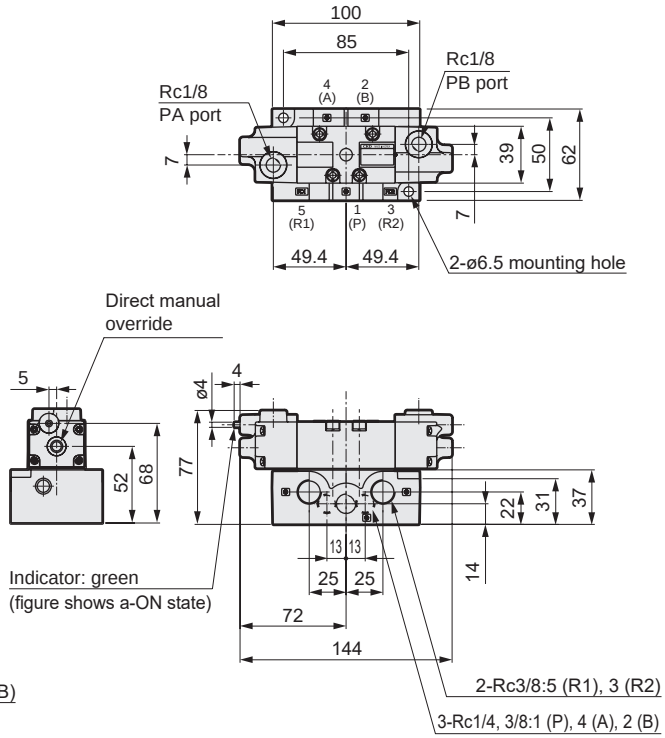

PV5S-6-FHG-D-0-*-A0*
PV5S-6-FJG-D-0-*-A0*
PV5S-6-FIG-D-0-*-A0*

● 3-position

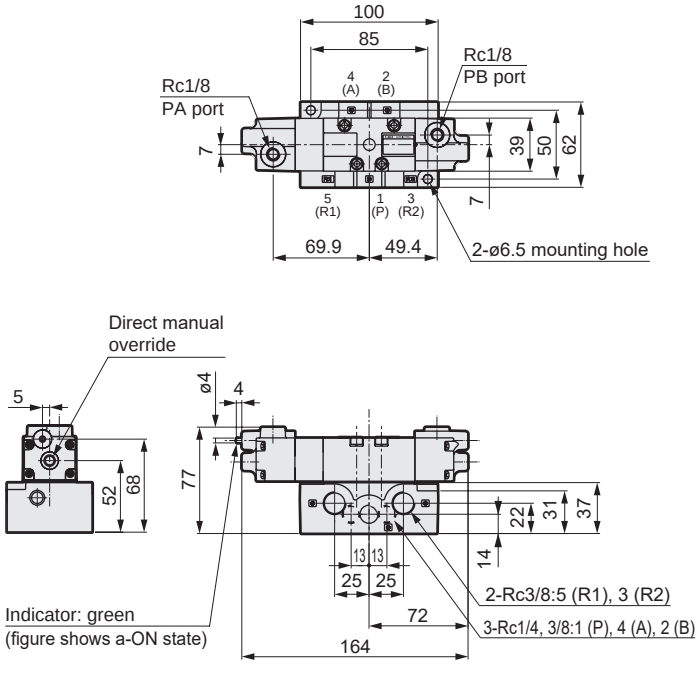

● Sub-plate dimensions

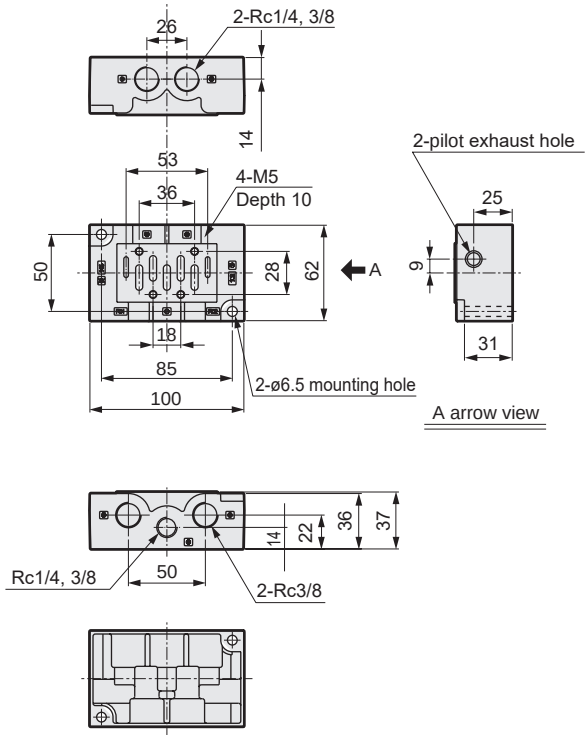

Dimensions: ISO size 2 (without sub-plate)

PV5S-8-FG-S-0-*

● 2-position single

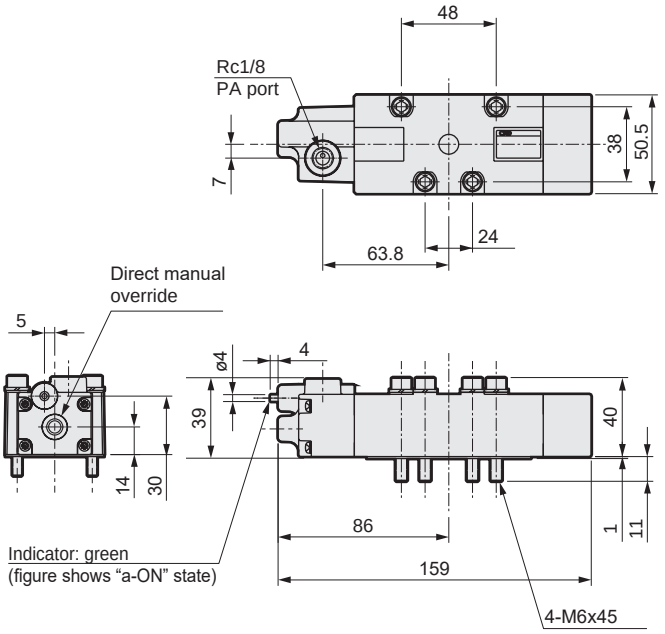

PV5S-8-FG-D-0-*

● 2-position double

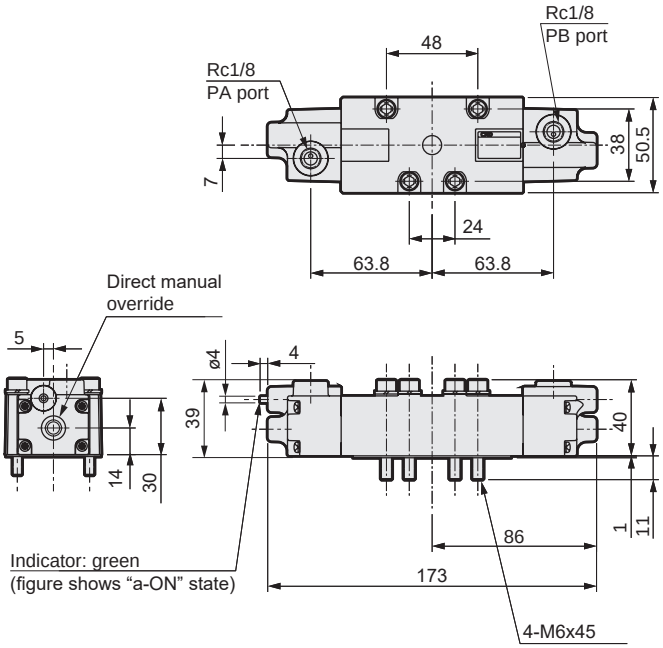

PV5S-8-FHG-D-0-*
PV5S-8-FJG-D-0-*
PV5S-8-FIG-D-0-*

● 3-position

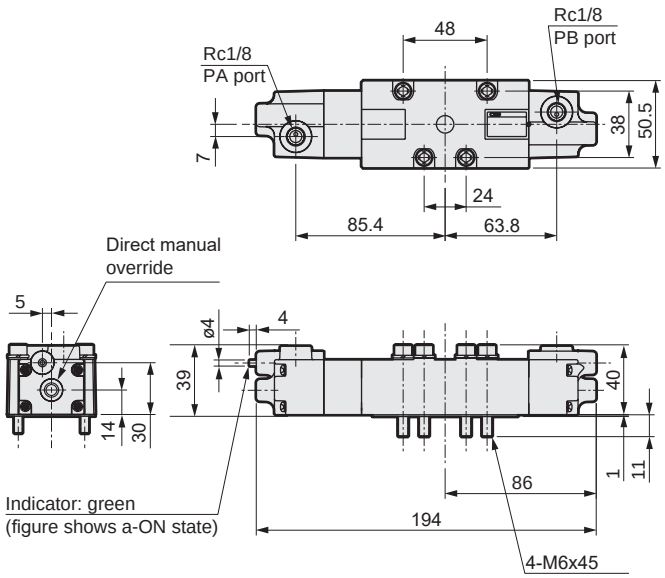

Dimensions: ISO size 2 (with sub-plate)

PV5S-8-FG-S-0-*-A0*

● 2-position single

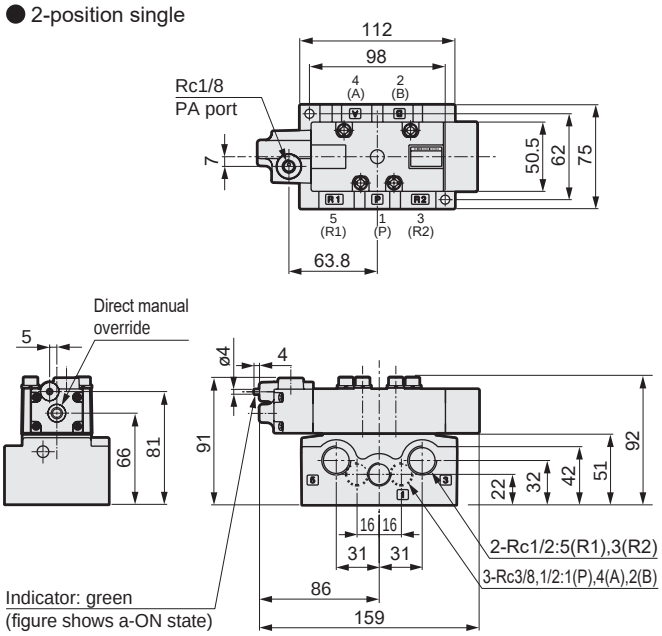

PV5S-8-FG-D-0-*-A0*

● 2-position double

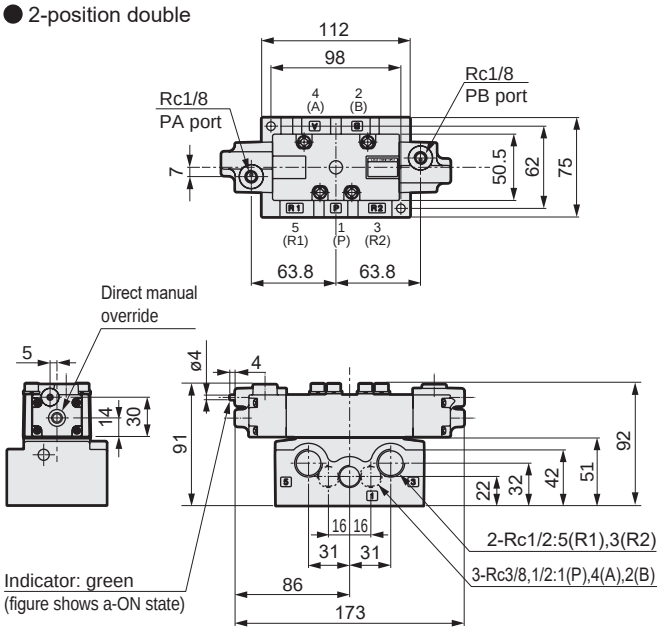

PV5S-8-FHG-D-0-*-A0*
PV5S-8-FJG-D-0-*-A0*
PV5S-8-FIG-D-0-*-A0*

● 3-position

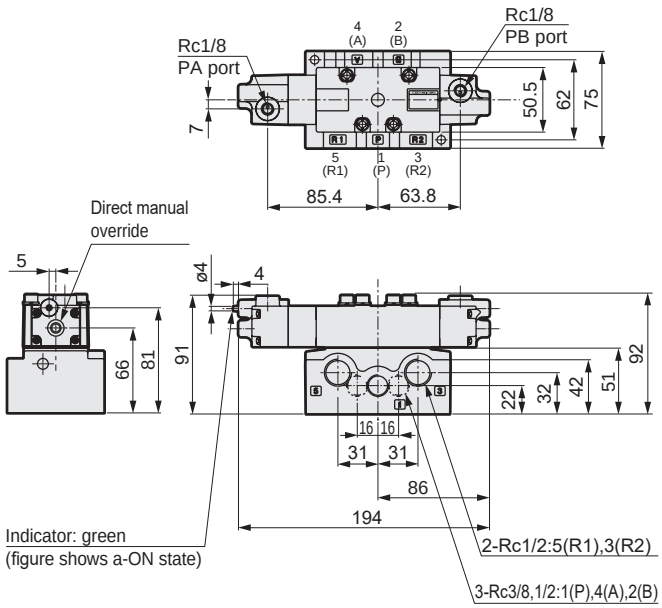

● Sub-plate dimensions

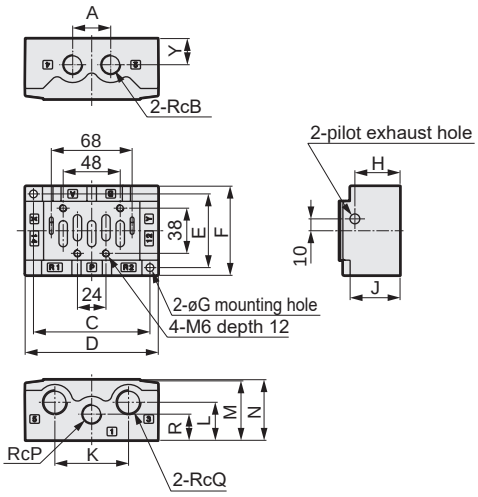

Model No.	CB2-A03	CB2-A04	CB2-A06
A	32		40
B	3/8	1/2	3/4
C	98		128
D	112		142
E	62		72
F	75		86
G	6.5		7.5
H	38		53
J	42		55
K	62		84
L	32		42
M	50		62
N	51		63
P	3/8	1/2	3/4
Q	1/2		3/4
R	22		30

Safety Precautions

Be sure to read this section before use.
Refer to Intro Page 59 for general precautions for using valves.

Product-specific cautions: Pilot operated 5-port valve PV5G/PV5/GMF/PV5S-0 Series

Design/selection

1. Safety design

⚠WARNING

■ Use the product in the range of conditions specified for the product.
The product in this catalog is designed for use only in a compressed air system. Use with pressure or temperature exceeding the specifications range may result in damage or operation faults. (Refer to specifications)
Contact CKD when using fluids other than compressed air.

■ When using a 3-position all ports closed valve with a custom stroke, the properties of compressed air make it impossible to brake at an accurate position. In addition, as valves and cylinders, etc., are designed to allow air leakage, pressure retention applications may cause the stop position to change or cause a pressure drop.

■ Take measures to prevent physical harm or property damage in the event of failure of this product.

⚠CAUTION

■ Check for leakage current to avoid malfunction caused by leakage current from other fluid control components.
When using a programmable controller, leakage current may affect the solenoid valve and cause malfunction.
Note that the values that are affected by leakage current depend on the solenoid valve.

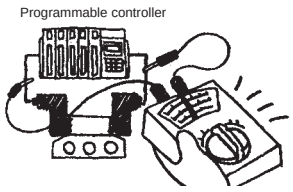

Using 100 VAC	3.0 mA or less
Using 12 VDC	1.5 mA or less
Using 24 VDC	1.8 mA or less

2. Common

⚠WARNING

■ Do not narrow the exhaust port of the manifold valves.
Other cylinders may be subject to unintended operation due to back pressure generated from the exhaust of the switching valve. In this case, individually install a manifold two-sided exhaust or a single exhaust spacer equipped with the valve causing the situation.

⚠CAUTION

■ Make sure that the instantaneous energizing/ manual override of the double solenoid 2 position valve is 0.1 seconds or more.
However, as the cylinder may malfunction due to secondary side load conditions, it is recommended that energizing/manual override is performed until the cylinder reaches the stroke end position.

■ Use dry compressed air that does not cause moisture inside the piping.

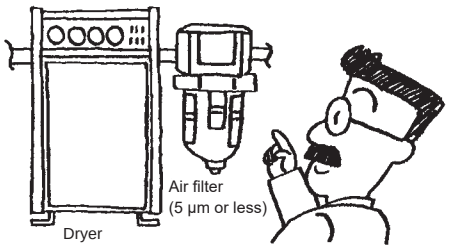

- Moisture will occur if the temperature drops in the pneumatic piping or pneumatic components.
- Operation faults could occur if moisture enters the air flow path of pneumatic components and temporarily blocks passage.
- Moisture could cause rust, making the pneumatic components fail.
- The drain will flush the lubricant oil and cause a lubrication defect.

Design/selection

3. Surge suppressor

⚠CAUTION

■ The surge suppressor attached with the solenoid valve is intended to protect the output contacts for the solenoid valve drive. There is no significant protection for the other peripheral devices, and devices could be damaged or could malfunction due to a surge. As well, surges generated by other devices may be absorbed and cause damage such as burning. Note the following points.

● The surge suppressor functions to limit a voltage surge in the solenoid valve, which can reach several hundred volts, to a low voltage level that the output contact can withstand. Depending on the output circuit used, this may be insufficient and could result in damage or malfunction. Check whether the surge suppressor can be used within the surge voltage limit of the solenoid valve in use, the output device's withstand pressure and circuit structure, and by the degree of return delay time. When necessary, provide other surge countermeasures. The solenoid valve with surge suppressor can suppress the inverse voltage surge that may occur when the solenoid valve is OFF to the level in the table below.

Specification voltage	Inverse voltage when OFF
12 VDC	Approx. 27 V
24 VDC	Approx. 47 V

● If the output unit is an NPN, a surge voltage equaling the voltage shown in the table above plus the power supply voltage may be applied to the output transistor. Make sure to implement a contact protection circuit to avoid the risk.

[Output transistor protection circuit: Installation example 1]

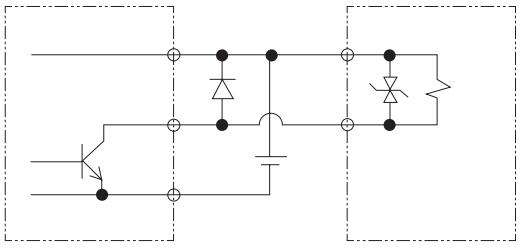

[Output transistor protection circuit: Installation example 2]

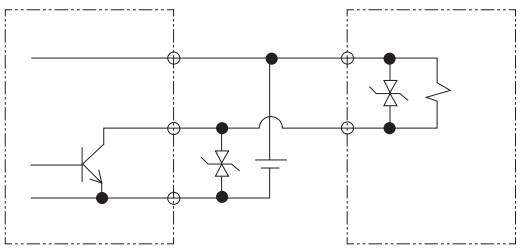

● "When solenoid valves are connected in parallel with other components or solenoid valves, inverse voltage is applied to these components and/or solenoid valves when the solenoid valve is turned OFF. Even in the case of a solenoid valve with 24 VDC surge suppressor, a surge voltage may reach negative tens of volts for some models. This inverse voltage may cause damage or malfunction to other components connected in parallel. Avoid parallel connection of devices susceptible to inverse polarity voltages, e.g., LED indicators. When driving several solenoid valves in parallel, the surge from other solenoid valves may enter the surge suppressor of one solenoid valve, and it may burn depending on the current value. When driving several solenoid valves with surge suppressors in parallel, surge current could concentrate at the surge suppressor with the lowest limit voltage and cause similar burning. Due to the variations in surge suppressor limit voltage that exist even among solenoid valves of the same model No., in the worst case the surge suppressor may burn out. Avoid driving multiple solenoid valves in parallel.

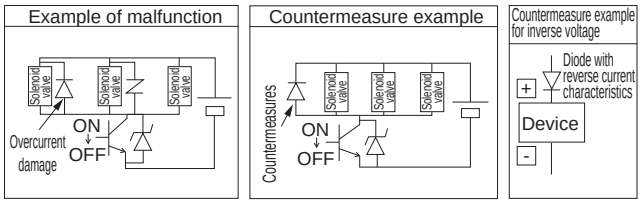

● The surge suppressor incorporated in the solenoid valve will often be short-circuited if it is damaged by overvoltage or overcurrent from other solenoid valves. Where there is a failed surge suppressor, if a large current flows when the output is ON, in the worst case scenario, the output circuit or solenoid valve could be damaged or ignited. Do not continue energizing in a state of failure. Additionally, to prevent large currents from continuing to flow, connect an overcurrent protection circuit to the power supply and drive circuit, or use a power supply with overcurrent protection.

Mounting, installation and adjustment

1. Common

⚠CAUTION

- When using a pilot check valve (PV5G-*-FPG-D, CMF*-PC), as the cylinder is retained by this pilot check valve, be aware that when the pressure to be supplied next is too low, the unit may not operate due to the pressure balance between the primary side and the secondary side of the poppet valve.

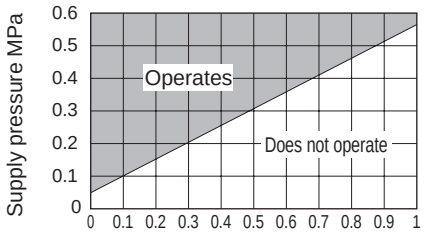

- When back pressure is applied to the exhaust ports R1/R2 while using a pilot check valve, as the cylinder may drop or the midway stopping accuracy may decrease, use as a combination with an independent exhaust spacer (CMF*-R) to prevent the back pressure from being applied as much as possible.
- When transporting the solenoid valves, do not hold by the cables. There is a risk of disconnection.
- Be sure to shut off the power supply externally before installation and wiring. Failure to do so may result in electric shock or damage.
- Check the rated voltage and terminal layout for correct wiring. If the connected power supply is not the rated voltage or wiring is wrong, fire or damage may occur.
- Use the specified torque to tighten the waterproof connector and terminal screw. If tightening is done haphazardly, fire or malfunction may occur.
- Do not use submerged in water.
- Use appropriate torque to tighten the pipes when connecting them.
  The purpose is to prevent air leakage and damage to bolts.
  First tighten the bolts by hand to ensure that the threads are not damaged, then use a tool.



[Reference value]

Port thread	Tightening torque N·m
Rc1/8	3 to 5
Rc1/4	6 to 8
Rc3/8	13 to 15
Rc1/2	16 to 18
Rc3/4	19 to 40

2. DIN terminal box

⚠CAUTION

- Use a JIS C3312 (600 V vinyl insulated vinyl cable) 2, 3, or 4-conductor (O.D.: ø8.5 to 11.5) cable with a conductor sectional area of 0.75 mm^2 or 1.25 mm^2.
- In order to prevent defective contact and detachment, use a crimping terminal at the tip of the cable. (Example: Use items within 1.25Y-3U, 1.25-3.5S, 1.25-4M, inner diameter M3.5 outer diameter 7 mm.
- Incorrect connections of terminals may cause the unit to malfunction. Refer to page 1470 for the correct connections.

3. Port filter

⚠CAUTION

- The port filter prevents the entry of foreign matter, and prevents problems from occurring in the valve. As this does not improve the quality of the compressed air, read Warnings and Precautions on Intro Page 61, then mount, install, and adjust the filter accordingly. Do not detach or press down the port filter forcibly. The filter could deform, causing problems. If contaminants and foreign matter are found on the filter surface, blow them lightly, or remove them by tweezers, etc.

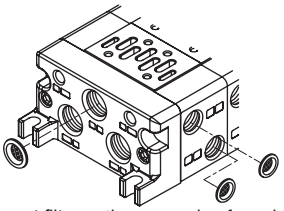

P, A, B port filter option example of combination

Use/maintenance

1. Disassembly/assembly

⚠WARNING

- Read the relevant product's instruction manual thoroughly and fully familiarize yourself with the work before disassembling or assembling the solenoid valve.
  - Personnel must be fully familiar with solenoid valve structure and operational principles and safety requirements.
  - Pneumatic Pressure Skill Test Class 2 or higher level is required.

2. Pneumatic source

⚠CAUTION

- The no-lubrication function cannot be maintained once lubrication has been applied to a no-lubrication valve. Once lubrication has been applied, it will be necessary to continue lubricating the valve.
  - Decide on lubrication or no-lubrication for the pneumatic components and ensure that implementation of the corresponding method is properly managed.
  - With the lubrication method, lubricants other than ISO VG32 (no additives) turbine oil cannot be used.

MEMO

3Q Series

Direct acting 3-port valve

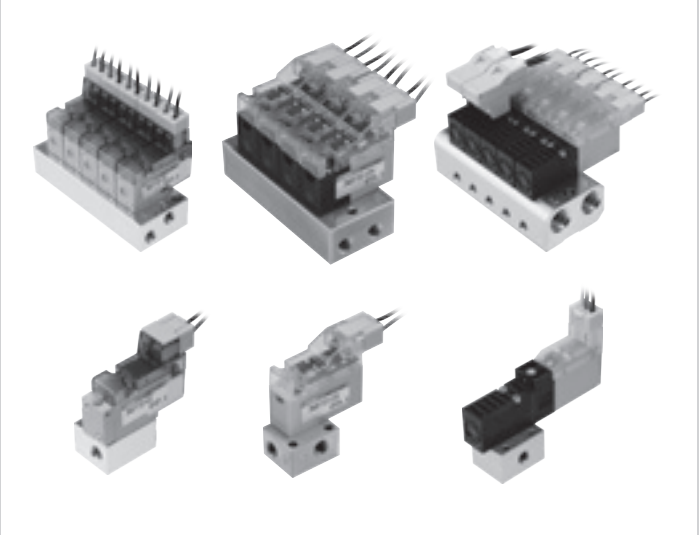

CONTENTS

Product introduction	1540
Series variation	1544
Electrical connection circuit diagram	1545
3QE Series	
● Single valve/sub-plate piping (3QE)	1546
● Individual wiring manifold (M3QE)	1546
3QB Series	
● Single valve/sub-plate piping (3QB1)	1552
● Individual wiring manifold (M3QB1)	1552
3QRA/3QRB Series	
● Discrete valve	
· Body piping (3QRA)	1558
· Sub-plate piping (3QRB)	1558
● Individual wiring manifolds	
· Body piping (M3QRA)	1558
· Sub-plate piping (M3QRB)	1558
Technical data	
(1) Connector wiring method	1565
Manifold specifications sheet	1569
⚠ Safety precautions	1566

Direct acting 3-port valve 3Q Series: compact, low exoergic, with large flow rate.

3QE/Z Series

Long service life 200 million operations | Low exoergic 5 °C or less | Low wattage 0.1 W | Continuous energizing OK | RoHS Compatible

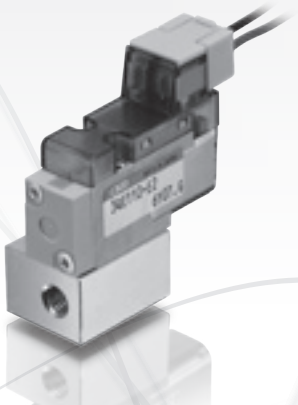

Grommet lead



E-connector single manual unit



E-connector manifold

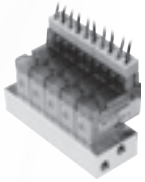

	3QE
Sonic conductance	Flow path 1 → 2: 0.04 dm³/(s·bar), flow path 2 → 3: 0.06 dm³/(s·bar)
Response time	6 ms/3 ms (ON/OFF) Note
Power consumption	0.35 W (0.1 W option)
Supported voltage	3 VDC, 5 VDC, 12 VDC, 24 VDC, 100 VAC

Note) According to JIS B 8419:2010 Dynamic performance testing.

3QB Series

Lightweight 12.5g | Long service life 100 million operations | High-speed response 5 ms or less | Low vacuum option | RoHS Compatible

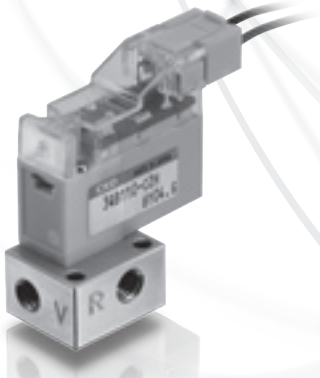

Positive pressure dedicated



Low vacuum dedicated



Positive pressure dedicated manifold

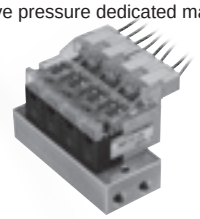

	H (low vacuum/positive pressure)	HP (positive pressure)	HV (low vacuum)
Sonic conductance	0.11 dm³/(s·bar)	0.11 dm³/(s·bar)	0.18 dm³/(s·bar)
Response time	5 ms or less Note		
Power consumption	Start: 2.2 W, hold: 0.6 W		
Supported voltage	12 VDC, 24 VDC		

Note) According to JIS B 8419:2010 Dynamic performance testing.

3QRA/B Series

Large flow rate C = 0.4 | Long service life 100 million operations | Hi-speed (ON/OFF) 4 ± 1 ms/ 1.5 ± 1 ms | Proprietary universal piping | Low vacuum Standard | RoHS Compatible

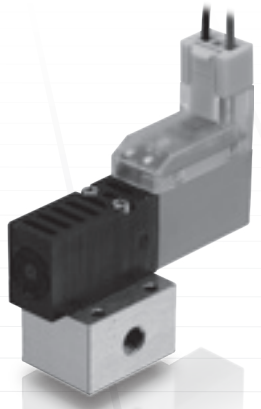

Body piping



Sub-plate piping self-hold



Sub-plate piping manifold with sensor

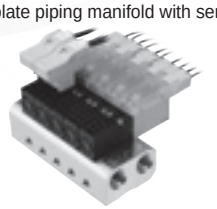

	3QRA	3QRB
Sonic conductance	0.30 to 0.38 dm³/(s·bar)	0.30 to 0.40 dm³/(s·bar)
Response time	4 ms/1.5 ms (ON/OFF) Note	
Power consumption	Standard: 2 W, large flow rate: 2.4 W	
Supported voltage	12 VDC, 24 VDC	

Note) According to JIS B 8419:2010 Dynamic performance testing.

3Q Series Applications

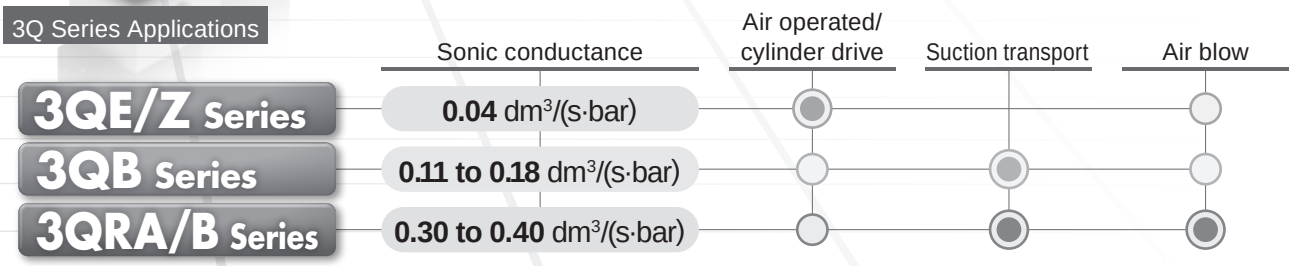

3QE/Z Series

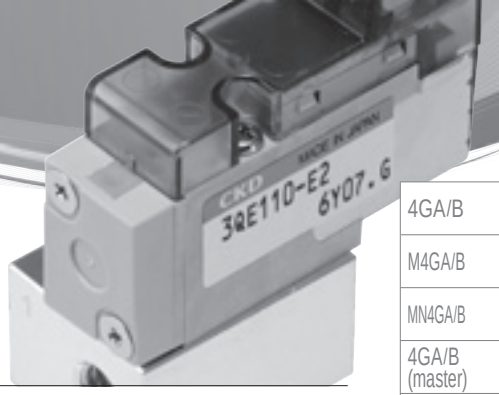

Easy to use

Upward/lateral common wiring connector used

The specification can be changed simply by changing the insertion direction.
No polarity.
Choose any option without fear of operation faults.

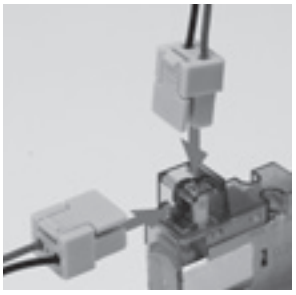

High maintainability

A manual override can be selected in accordance with equipment maintenance.

Non-locking



Locking (patent pending)



Environmental

Low power realized

Low power, low exoergic realized.

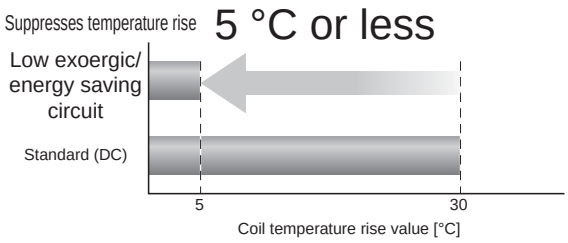

Energy saving waveform

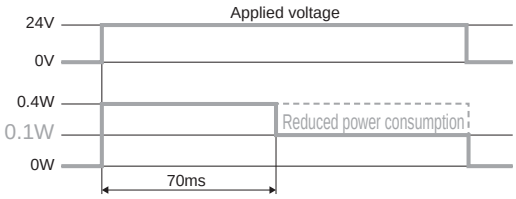

Reliable

Long service life realized

Durability: DC: **200** million cycles, AC: **100** million cycles

* In accordance with in-house test conditions.

Prevents malfunction

[Uses PWM control circuit]
It prevents malfunction due to impact and vibration.
[Improved responsivity after shutdown]
The adoption of low-adhesion rubber enables stable response time even after being out of use for long periods.
[Port P filter as standard]
It prevents snagging due to foreign matter, enabling stable operation.

Enables continuous energization (option)

Uses a new coil actuator. The low exoergic/energy type is capable of continuous energization.

Applications

For controlling air operated valves

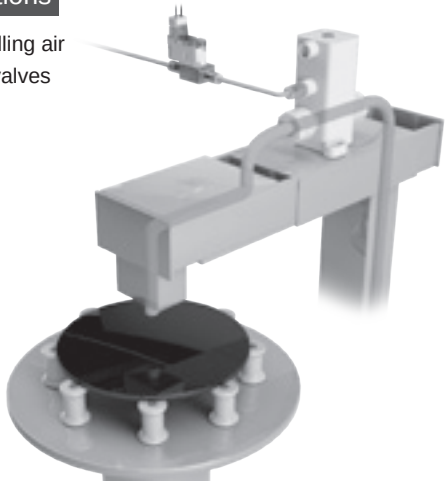

For controlling compact actuators such as single acting cylinders and air grinders

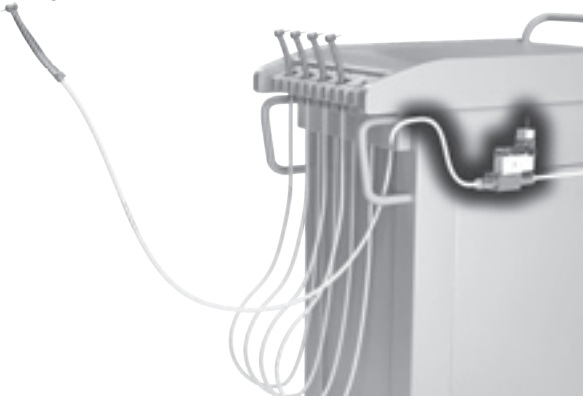

3QB Series

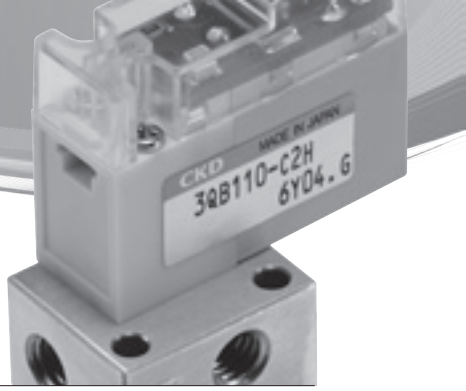

High performance

Compact and lightweight

Valve width: **10** mm

Weight: **12.5** g

High response

Low-adhesion rubber is used. Stable response can be achieved.

5 ms or less

According to JIS B 8419:2010 Dynamic performance testing.

Large flow rate

The spring load and coil vacuum force have been optimized to maximize the flow rate.

HV **0.18** $dm^3/(s \cdot bar)$

HP **0.11** $dm^3/(s \cdot bar)$

Low vacuum/positive pressure switching

Low vacuum and positive pressure can be freely combined. The product can be used as a single unit as well as customized according to your needs. (Made to order product)

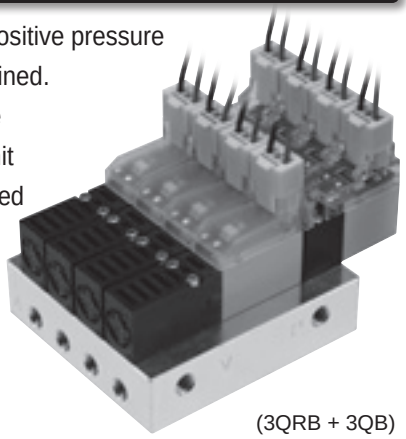

(3QRB + 3QB)

Long service life

Durability: **100 million cycles**

* In accordance with in-house test conditions.

Specifications

Select the ideal model according to the application.

Applications	Pressure specification	Max. working pressure MPa	Min. working pressure MPa	C $dm^3/(s \cdot bar)$
For low vacuum/ positive pressure	H	0.30	-0.1	0.11
For positive pressure	HP	0.65	0.1	0.11
For low vacuum	HV	0	-0.1	0.18

Applications

Mounting electronic parts

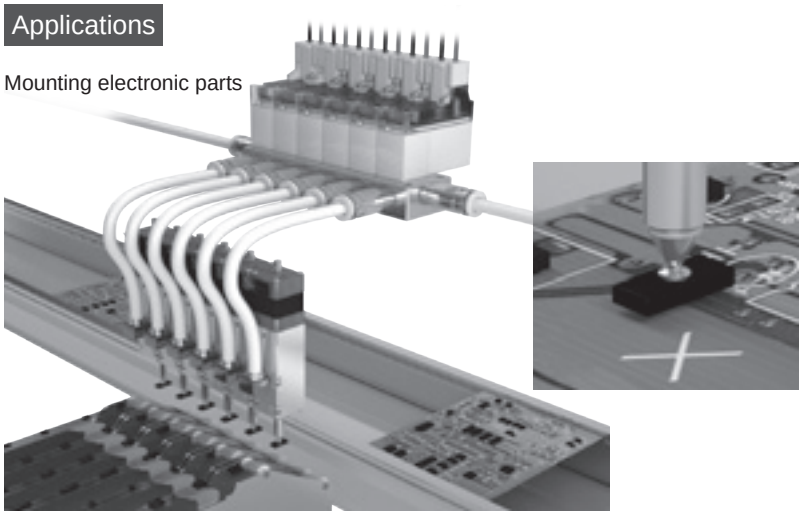

Low vacuum/positive pressure switching applications

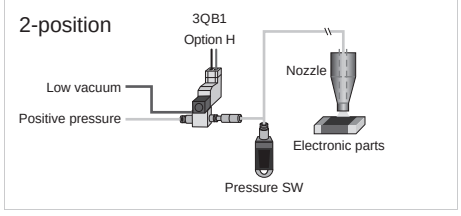

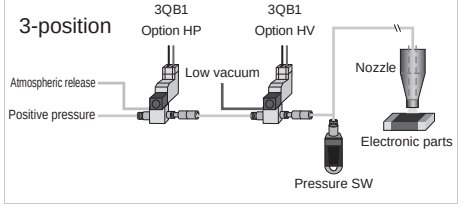

3QRA/B Series

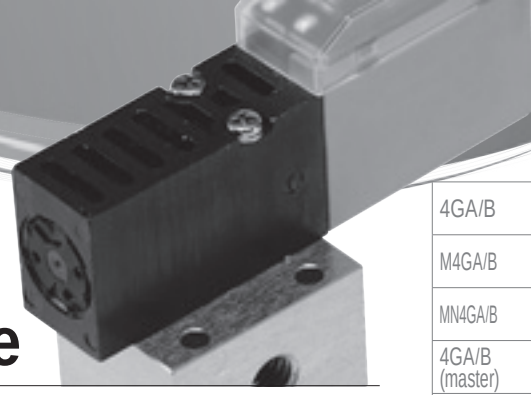

Proprietary universal structure

Universal structure

Pressurization is possible from any port.
Proprietary balance poppet structure that achieves a large flow rate.

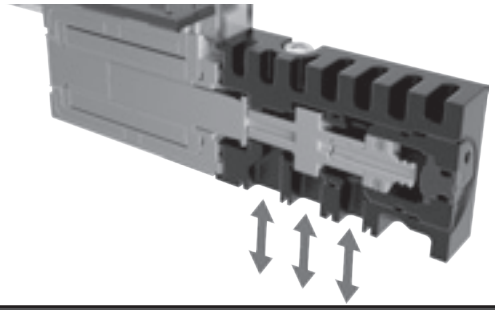

Large flow rate

Large flow rate **0.4** dm³/(s·bar)

Standard **0.3** dm³/(s·bar)

High response

4 ±1 ms/

1.5 ±1 ms (ON/OFF)

According to JIS B 8419:2010 Dynamic performance testing.

Long service life

Durability: **100 million cycles**

* In accordance with in-house test conditions.

Self-hold (option)

Capable of status retention in case of power failure (at vacuum). Does not require continuous energization, which reduces electric power consumption and heat generation.

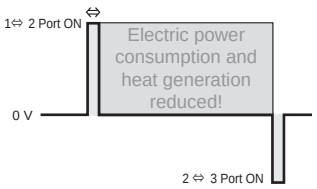

High-speed tact

Ensures high-speed tact of vacuum burst without positive pressure. Increased vacuum flow rate means suction time can also be reduced.

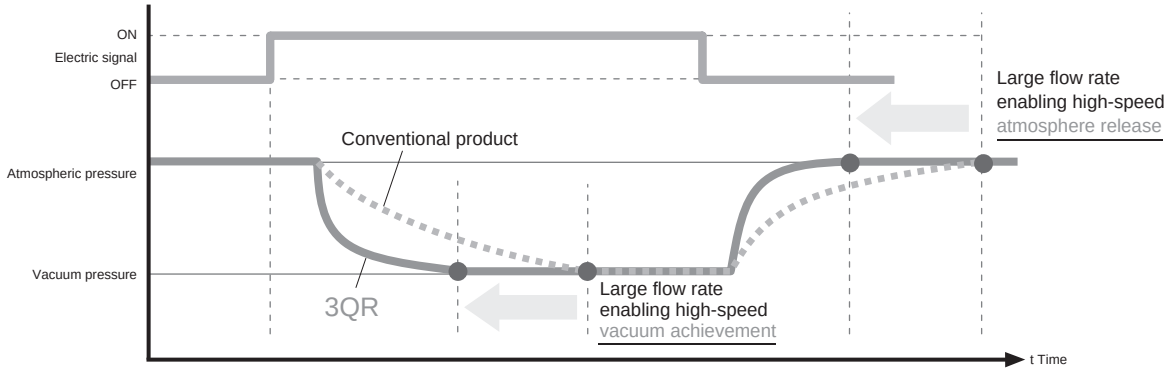

Applications

Suction/transport of electronic parts

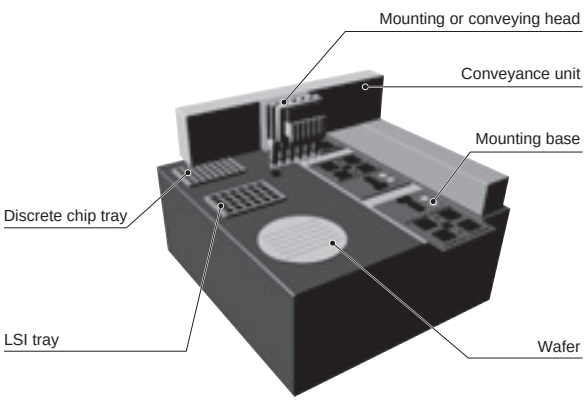

ON/OFF control of air blow

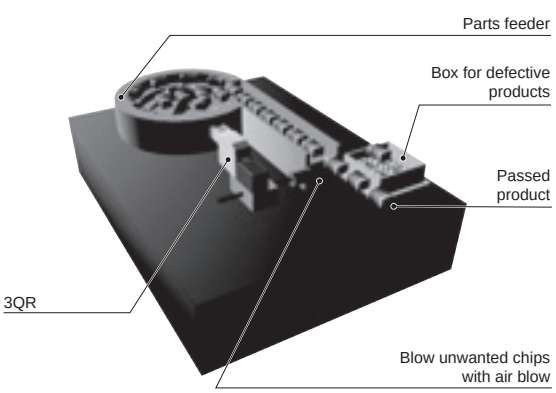

Series variation

Electrical connections/Series external appearance			No. of ports	Position Number of solenoid valves JIS symbol	Valve performance: Flow characteristics C [dm³/(s·bar)] *1	Valve performance: Applicable cylinder diameter	Voltage [V]	Switching position: 2-position single (self-reset)	Switching position: 2-position single (self-hold)	Switching position: Mix manifold	Port size: M5	Electrical connections: Grommet lead wire	Electrical connections: C-connector	Electrical connections: D-connector	Electrical connections: E-connector	Electrical connections: EJ-connector	Page
3QE Series	Single unit	3QE1 	3-port	● 2-position Single (NC) Without manual override 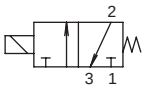 With manual override 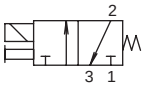	0.04 to 0.06	ø6 to ø20	100 VAC 24 DC 12 DC 3 DC 5 DC	●			●	●				●	●	1546
	Individual wiring manifold Side piping	M3QE1 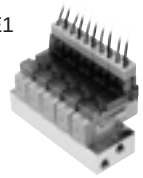	3-port		0.04 to 0.06	ø6 to ø20	100 VAC 24 DC 12 DC 3 DC 5 DC	●		●	●	●			●	●	1546
	Individual wiring manifold Rear piping	M3QZ1 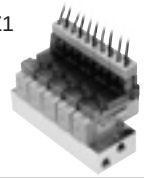	3-port		0.04 to 0.06	ø6 to ø20	100 VAC 24 DC 12 DC 3 DC 5 DC	●		●	●	●			●	●	1546
3QB Series	Single unit	3QB1 	3-port	● 2-position Single (NC) 3QB1-H (P) 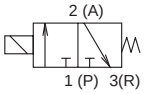	0.11 Up to 0.18	ø6 to ø20	24 DC 12 DC	●			●		●	●			1552
	Individual wiring manifold	M3QB1 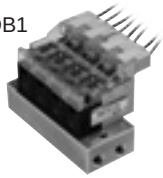	3-port	3QB1-HV 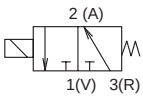	0.11 Up to 0.18	ø6 to ø20	24 DC 12 DC	●		●	●		●	●			1552
3QRA/3QRB Series	Single unit	3QRA1 	3-port	● 2-position Universal (Self-reset) 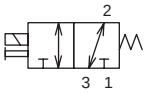 Port No.item1.2.3is PortG1:P,NC PortG2:A,COM PortG3:R,NO . (self-hold) 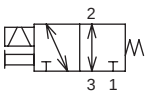 Port No.item1.2.3is PortG1:P,NC PortG2:A,COM PortG3:R,NO .	0.30 to 0.38	ø6 to ø25	24 DC 12 DC	●	●		●	●	●	●			1558
		3QRB1 	3-port		0.30 to 0.40	ø6 to ø25	24 DC 12 DC	●	●		●	●	●	●			1558
	Individual wiring manifold	M3QRA1 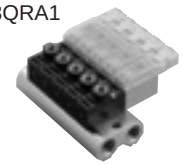	3-port		0.30 to 0.38	ø6 to ø25	24 DC 12 DC	●	●	●	●	●	●	●			1558
		M3QRB1 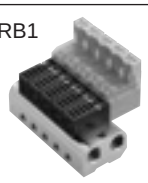	3-port		0.30 to 0.40	ø6 to ø25	24 DC 12 DC	●	●	●	●	●	●	●			1558

*1: Effective cross-sectional area S and sonic conductance C are converted as S ≈ 5.0xC.
*2: For 3QRA and 3QRB Series, large flow rate (H) cannot be selected for flow rate size.

Electrical connection circuit diagram

● 3QE Series

Electrical connections		Without lead wire	With lead wire	With indicator lamp	With surge suppressor	Without socket	Circuit diagram
Blank	Grommet lead wire		●				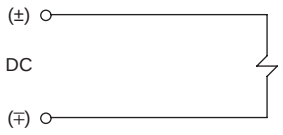
E0	E-connector		●				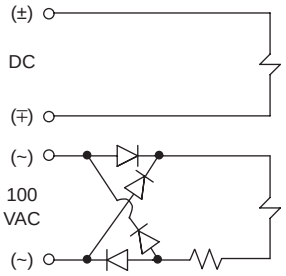
E0*J	EJ-connector		●				
E0N	E-connector					●	
E1	E-connector	●					
E2	E-connector		●	●	●		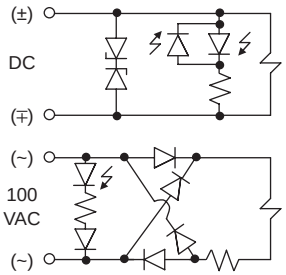
E2*J	EJ-connector		●	●	●		
E2N	E-connector			●	●	●	
E3	E-connector	●		●	●		
Option S E2	E-connector		●	●	●		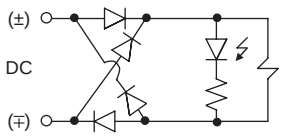
Option S E2*J	EJ-connector		●	●	●		
Option S E2N	E-connector			●	●	●	
Option E E2	E-connector		●	●	●		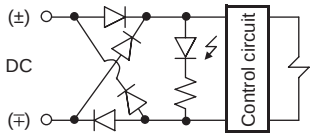
Option E E2*J	EJ-connector		●	●	●		
Option E E2N	E-connector			●	●	●	

● 3QB Series

Wiring circuit	Connection
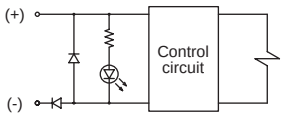	C-connector (C2*/C3) D-connector (D2*/D3) Polarized

● 3QRA/3QRB Series

Voltage	Solenoid position	Option	Wiring circuit	Connection
DC	2-position Single (Self-reset)	-		Grommet lead wire (blank) No polarity
		With surge suppressor and indicator lamp	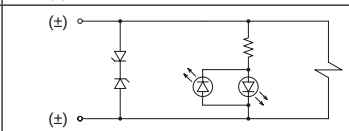	C-connector (C2*/C3) D-connector (D2*/D3) No polarity
		Large flow rate with surge suppressor and indicator lamp	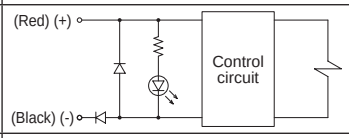	C-connector (C2*/C3) D-connector (D2*/D3) Polarized
	2-position Single (self-hold)	With surge suppressor and indicator lamp	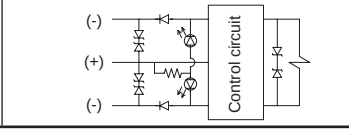	C-connector (C2*/C3) D-connector (D2*/D3) Polarized

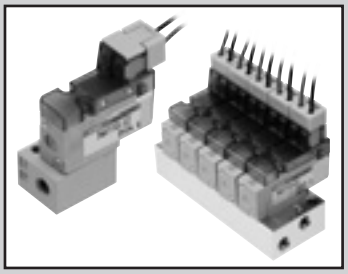

Direct acting 3-port valve
Discrete valve/sub-plate piping

3QE Series

Individual wiring manifold/sub-plate piping

M3QE Series

● Cylinder bore size: ø6 to ø20

JIS symbol

● 2-position
Single (NC)

Without manual override

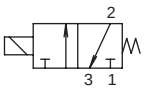

With manual override

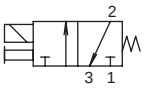

Common specifications

Item	Description
Valve and operation	Direct acting poppet valve
Working fluid	Compressed air
Max. working pressure MPa	0.7
Min. working pressure MPa	0
Proof pressure MPa	1.05
Ambient temperature °C	-5 to 55 (no freezing)
Fluid temperature °C	5 to 55
Manual override	None/Non-locking manual/ Locking manual override
Lubrication *1	Not required
Degree of protection *2	Dust-proof
Vibration resistance m/s^2	50 or less
Impact resistance m/s^2	300 or less
Atmosphere	In a corrosive gas atmosphere Not available
Port size	M5

*1. Use turbine oil Class 1 ISO VG32 for lubrication.
*2. Avoid water drops or oil, etc., during use.

Electrical specifications

Item		Description	
		Standard	Low exoergic/low energy
Rated voltage (V)		DC3, 5, 12, 24V 100 VAC	12, 24 VDC
Voltage fluctuation range		±10%	
Holding current A *3	3 VDC	0.120 (0.136)	-
	5 VDC	0.072 (0.082)	-
	12 VDC	0.030 (0.034)	(0.010)
	24 VDC	0.015 (0.017)	(0.005)
	100 VAC	0.009 (0.010)	-
Power consumption W *3	3 VDC	0.35 (0.40)	-
	5 VDC	0.35 (0.40)	-
	12 VDC	0.35 (0.40)	0.10
	24 VDC	0.35 (0.40)	0.10
Apparent power VA Values in ( ) are with lamp	100 VAC	0.93 (0.98)	-
Thermal class		B	
Surge suppressor		Option	
Indicator		LED	

*3. Values in ( ) apply when lamp is included.In addition, the type with low exoergic/energy circuit is only available with lamp.

Performance/characteristics

Item	3QE
Flow characteristic C $[dm^3/(s \cdot bar)]$	1 → 2: 0.04, 2 → 3: 0.06
Response time *4 ms	ON:6 OFF:3
Weight *5 g	16

*4: According to JIS B 8419:2010 Dynamic performance testing.
(Initial values at supply pressure 0.5 MPa, 20°C, no lubrication, rated voltage, continuous operation)
*5: The weight listed is the weight without the base.

Ozone-proof specifications

Conforms to low-concentration ozone specifications as standard.

CE marking specifications

** - Voltage - **ST**

- Standard voltage of 24 VDC or less is CE marking-compatible even if the model No. is not indicated with "ST".

How to order

● Discrete valve

3QE1 1 0 - M5 - M E2 A —— 3

● Discrete valve for mounting base

3QE1 1 9 - 00 - E2 E —— 3

● Manifold model No.
Side piping manifold

M3QE1 1 0 - M5 - M1 - 10 - 3

Rear piping manifold

M3QZ1 1 0 - M5 - M1 - 10 - 3

Ⓐ Model No. | Operation | Ⓑ Solenoid position | Ⓒ Port size | Ⓓ Manual override | Ⓔ Electrical connections | Ⓗ Voltage

Ⓐ Model No.	3QE1	M3QZ1 M3QE1

Ⓑ Solenoid position			
1	2-position single normally closed	●	●
8	Mix manifold		●

Ⓒ Port size			
M5	M5	●	●

Ⓓ Manual override			
Blank	Without manual override	●	●
M	Non-locking manual override	●	●
M1	Locking manual override	●	●

Ⓔ Electrical connections			
Blank	Grommet lead wire (300 mm) *1	●	●
E0	E-connector lead wire (300 mm)	●	●
E00	E-connector lead wire (500 mm)	●	●
E01	E-connector lead wire (1000 mm)	●	●
E02	E-connector lead wire (2000 mm)	●	●
E03	E-connector lead wire (3000 mm)	●	●
E0N	E-connector without lead wire (without socket)	●	●
E1	E-connector without lead wire (with socket/terminal)	●	●
E2	E-connector, lead wire (300 mm) with lamp/surge suppressor	●	●
E20	E-connector, lead wire (500 mm) with lamp/surge suppressor	●	●
E21	E-connector, lead wire (1000 mm) with lamp/surge suppressor	●	●
E22	E-connector, lead wire (2000 mm) with lamp/surge suppressor	●	●
E23	E-connector, lead wire (3000 mm) with lamp/surge suppressor	●	●
E2N	E-connector without lead wire (without socket) with lamp/surge suppressor	●	●
E3	E-connector without lead wire (with socket/terminal) with lamp/surge suppressor	●	●
E01J	EJ-connector, lead wire (1,000 mm)	●	●
E02J	EJ-connector, lead wire (2,000 mm)	●	●
E03J	EJ-connector, lead wire (3,000 mm)	●	●
E21J	EJ-connector, lead wire (1,000 mm) with lamp/surge suppressor	●	●
E22J	EJ-connector, lead wire (2,000 mm) with lamp/surge suppressor	●	●
E23J	EJ-connector, lead wire (3,000 mm) with lamp/surge suppressor	●	●

Ⓕ Option			
A	Ozone/coolant proof	●	●
S	Surgeless *2	●	●
E	Low exoergic/energy circuit *2, *3	●	●
F	Port A filter integrated *4		●

Ⓖ Station No.			
2 to 20	2 stations to 20 stations		●

Ⓗ Voltage			
1	100 VAC (rectifier integrated)	●	●
3	24 VDC	●	●
4	12 VDC	●	●
7	3 VDC	●	●
8	5 VDC	●	●

Precautions for model No. selection

*1 : The grommet lead wire specifications support DC voltage only.
2 : E2 type and E2*J type connectors support 12/24 VDC only. In addition, surgeless "S" and low exoergic/energy circuit "E" cannot be selected together.
*3 : Surgeless specifications.
*4 : A filter is built into port P as standard.

[Example of model No.]

M3QE110-M5-M1E0A-10-3

Ⓐ Model No. : Side layout manifold
Ⓑ Solenoid position : 2-position normally closed
Ⓒ Port size : M5
Ⓓ Manual override : Locking manual override
Ⓔ Electrical connections : E-connector lead wire 300 mm
Ⓕ Option : Fluorine specification
Ⓖ Station No. : 10 stations
Ⓗ Voltage : 24 VDC

How to order masking plate kit

3QE1 - MP - KIT

* Gasket/mounting screw included

Manual override

Blank	Without manual override	M	Non-locking manual override	M1	Locking manual override

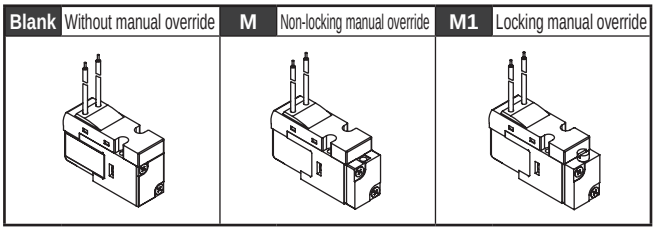

Electrical connections

Blank	Grommet lead wire	E*	E-connector	EJ*	EJ-connector	E1	E-connector With socket/terminal	E0N	E-connector Without socket

· Lead wire length
300 mm

· Lead wire length
300 mm
500 mm
1000 mm
2000 mm
3000 mm

· Lead wire length
1000 mm
2000 mm
3000 mm

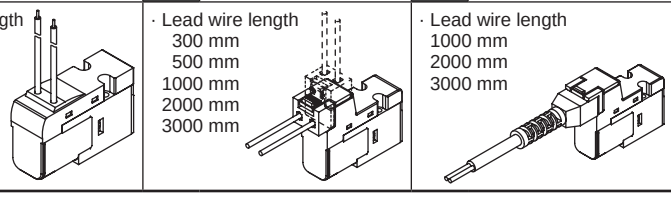

Dimensions (3QE)

3QE110-M5

· 2-position single: grommet lead wire

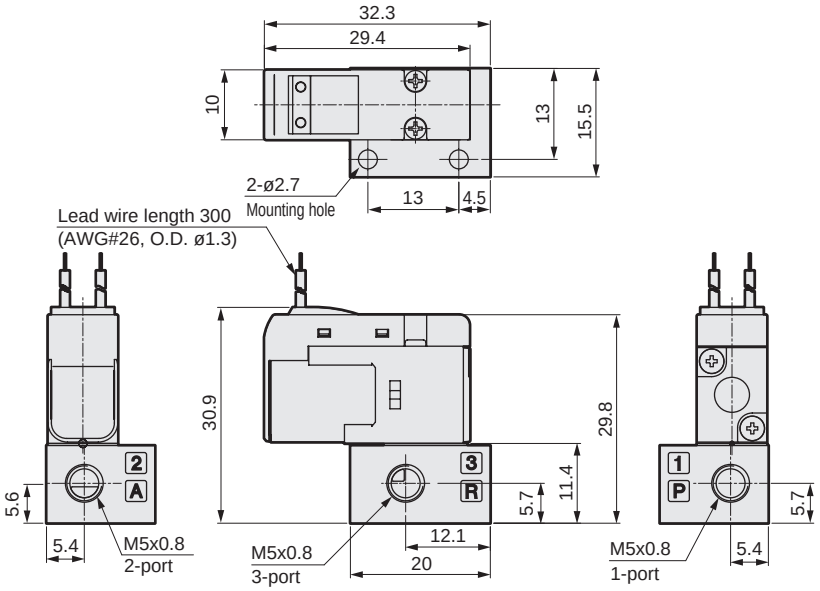

· E-connector (E)

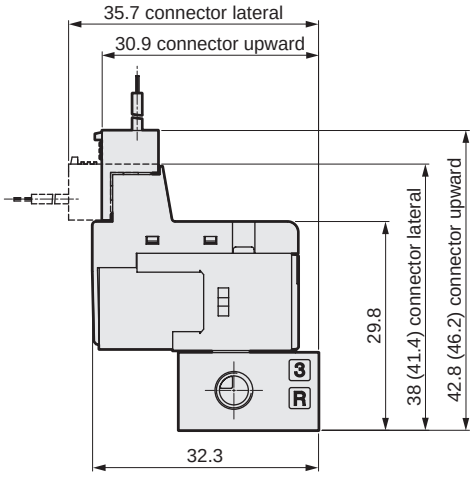

· Non-locking manual override (M)

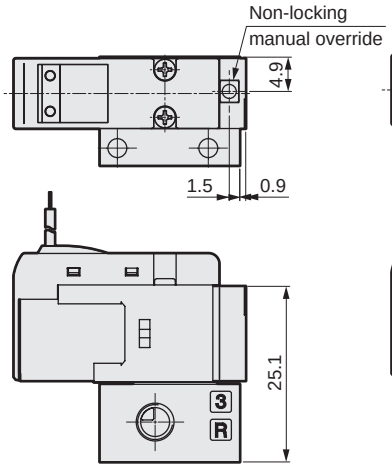

· Locking manual override (M1)

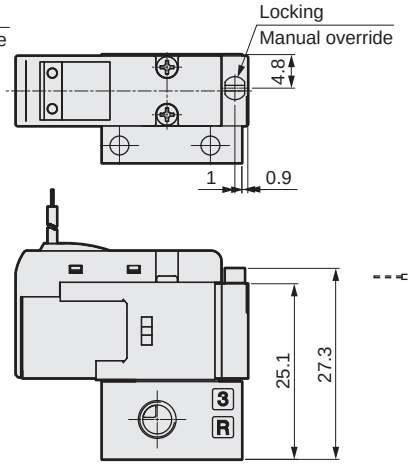

· EJ-connector (E*J)

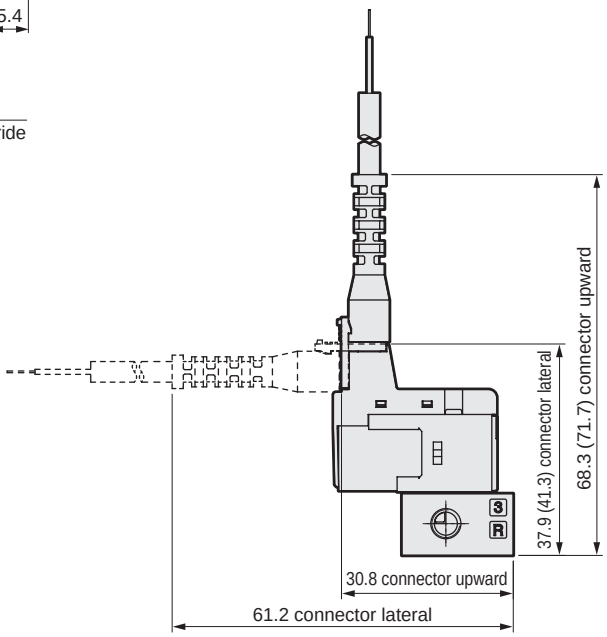

3QE119-00

· 2-position single: grommet lead wire

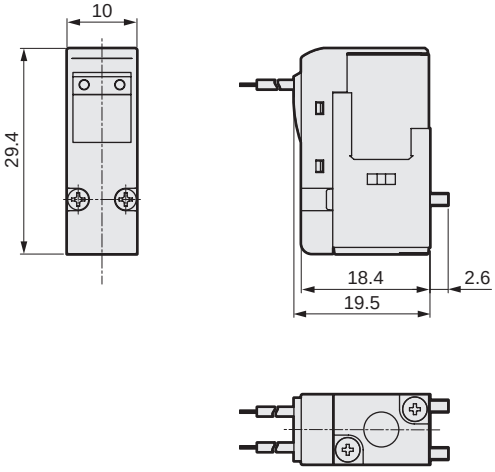

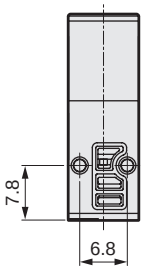

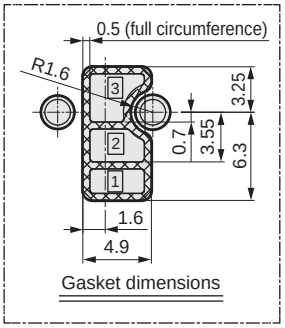

Gasket dimensions

· Non-locking manual override (M)

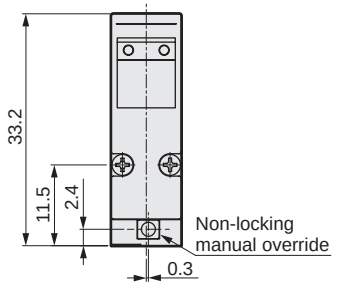

· Locking manual override (M1)

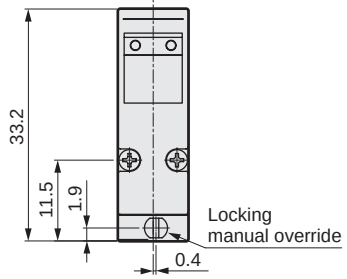

Dimensions (M3QE/M3QZ)

M3QE110-M5

· 2-position single: grommet lead wire

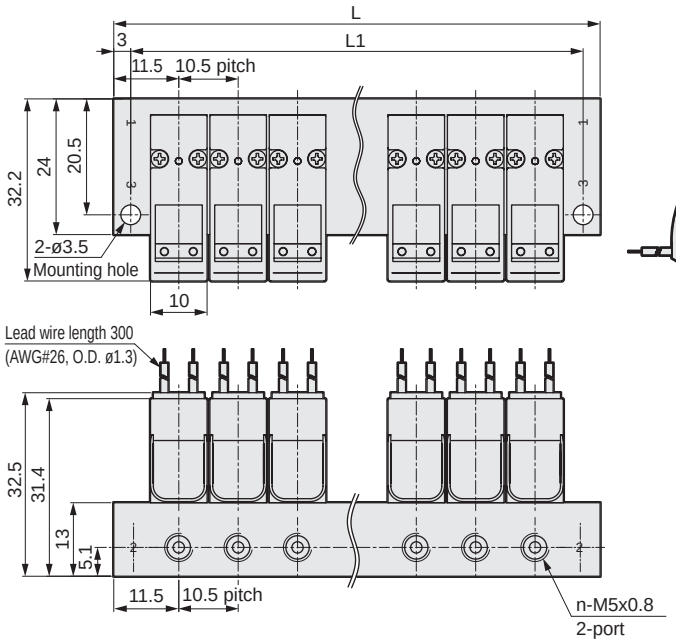

· E-connector (E)

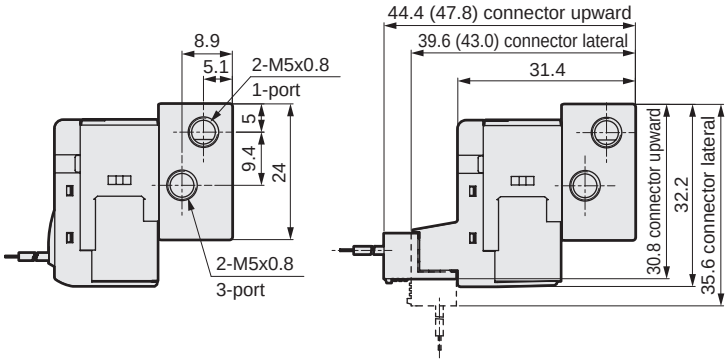

· EJ-connector (E*J)

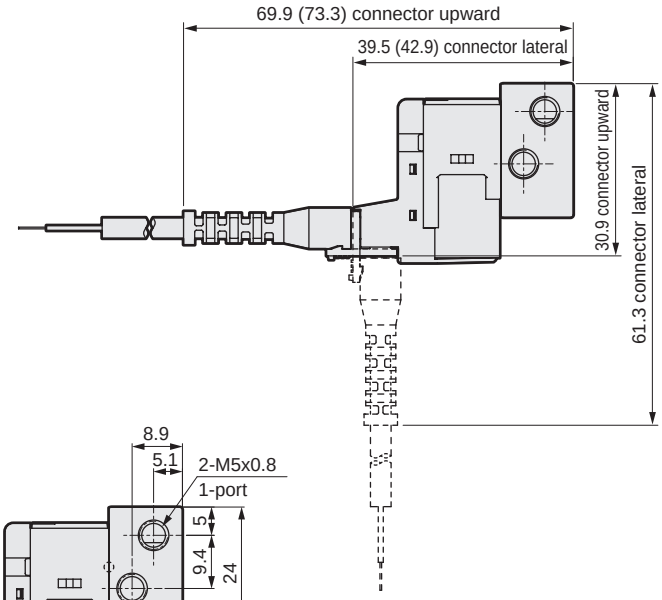

M3QZ110-M5

· 2-position single: grommet lead wire

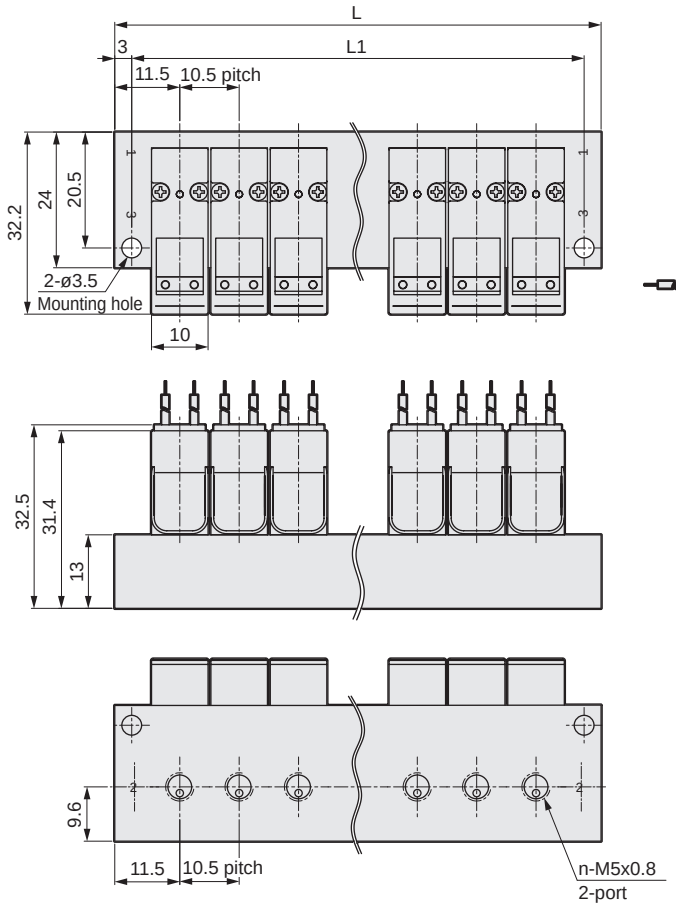

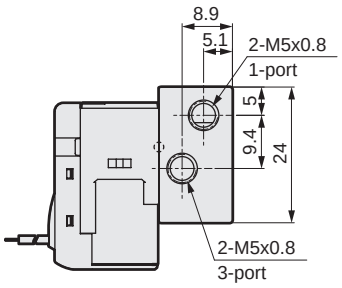

· E-connector (E)

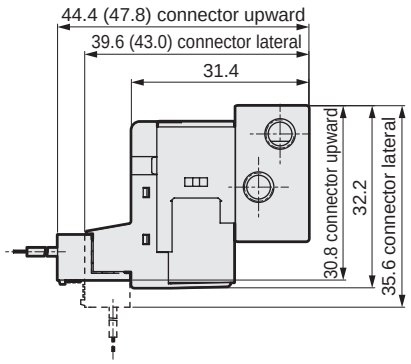

Station No.	2	3	4	5	6	7	8	9	10	11	12	13	14	15	16	17	18	19	20
L	33.5	44.0	54.5	65.0	75.5	86.0	96.5	107.0	117.5	128.0	138.5	149.0	159.5	170.0	180.5	191.0	201.5	212.0	222.5
L1	27.5	38.0	48.5	59.0	69.5	80.0	90.5	101.0	111.5	122.0	132.5	143.0	153.5	164.0	174.5	185.0	195.5	206.0	216.5

Dimensions (M3QE)

M3QE110-M5

· Non-locking manual override (M)

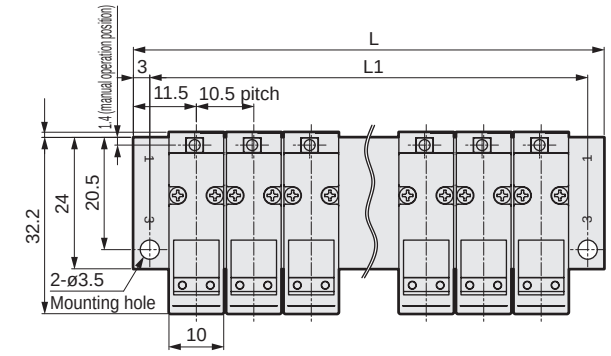

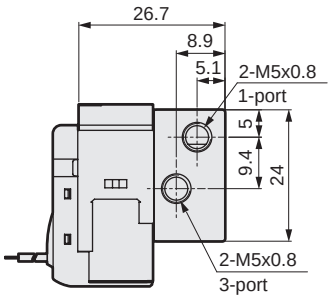

· E-connector (E)

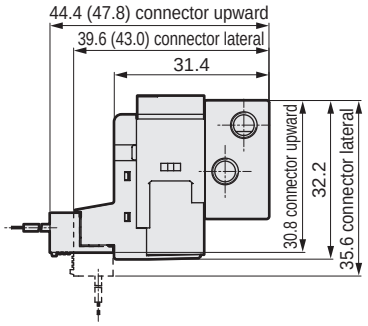

· EJ-connector (E*J)

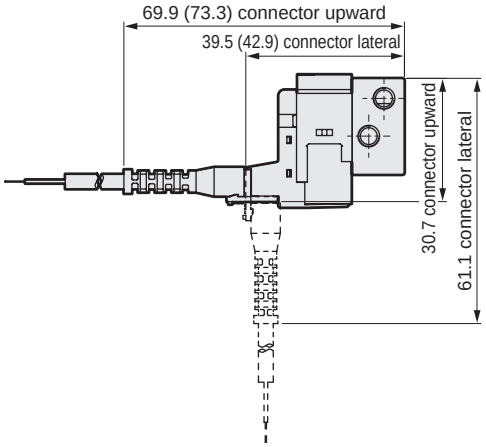

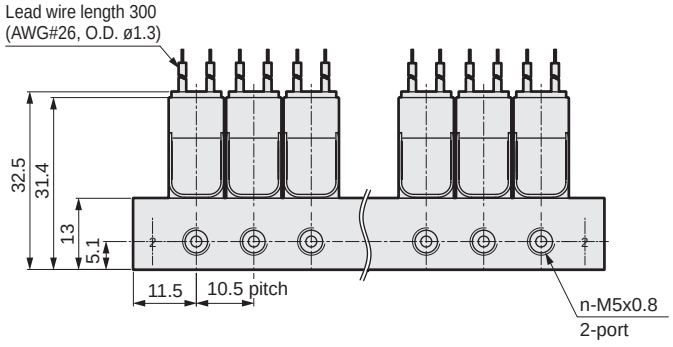

M3QE110-M5

· Locking manual override (M1)

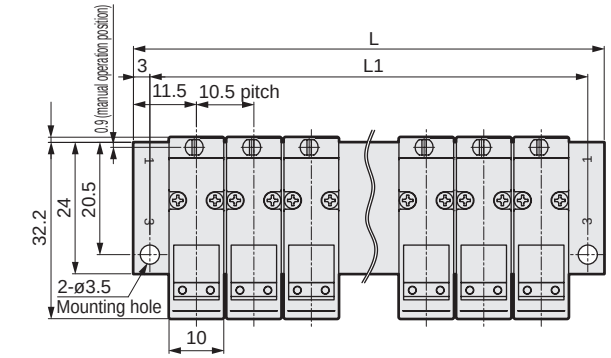

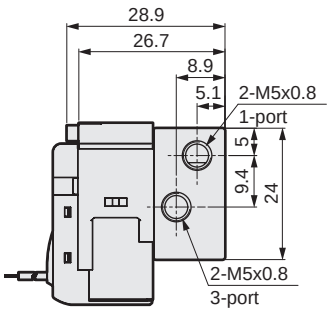

· E-connector (E)

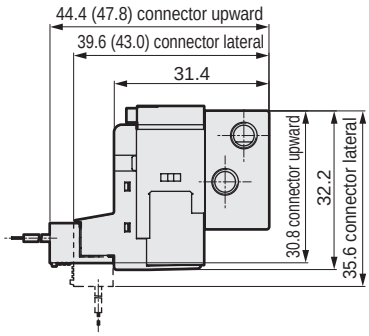

· EJ-connector (E*J)

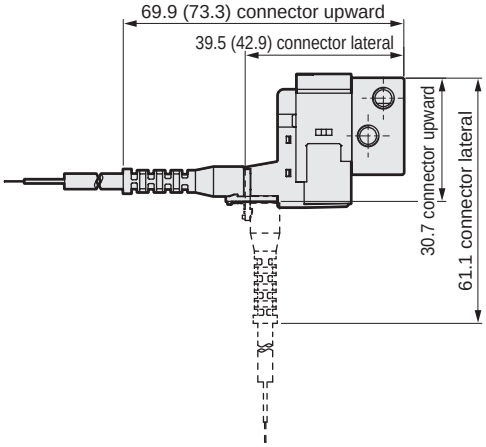

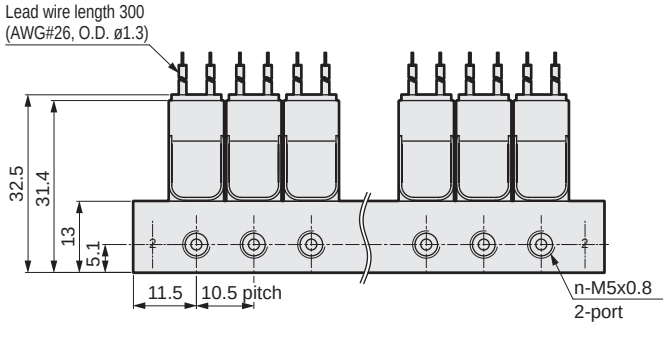

Station No.	2	3	4	5	6	7	8	9	10	11	12	13	14	15	16	17	18	19	20
L	33.5	44.0	54.5	65.0	75.5	86.0	96.5	107.0	117.5	128.0	138.5	149.0	159.5	170.0	180.5	191.0	201.5	212.0	222.5
L1	27.5	38.0	48.5	59.0	69.5	80.0	90.5	101.0	111.5	122.0	132.5	143.0	153.5	164.0	174.5	185.0	195.5	206.0	216.5

Internal structure and parts list

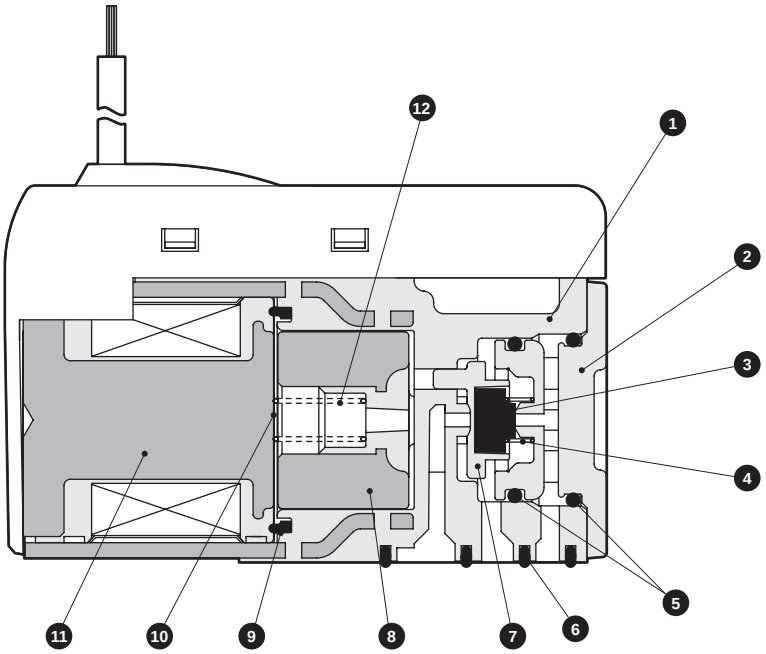

No.	Part name	Material
1	Body	Resin
2	Body (plug)	Resin
3	Valve seat	Nitrile rubber
4	Valve spring	Stainless steel
5	O-ring	Hydrogenated nitrile rubber
6	Body gasket	Hydrogenated nitrile rubber
7	Valve guide	Resin
8	Plunger	Stainless steel
9	Coil gasket	Silicone rubber
10	Buffer sheet	Resin
11	Coil assembly	-
12	Plunger spring	Stainless steel

How to use E and EJ models

How to use E-connector

■The E-connector has top and side connectors to which sockets can be connected. The socket assembly is connected from the upward direction at shipment. Select the connection direction based on the installation environment.

■How to mount and remove socket

- When mounting the socket, hold the lever and socket with fingers and insert straight into the square window on the connector body. Align the lever finger with the groove on the connector body and lock it. When mounting from the top, position the socket so that the lever faces the front. When mounting from the side, position the socket so that the lever is in an upward direction.
- When pulling out the socket, press down the lever to release its finger from the groove, then pull straight out.

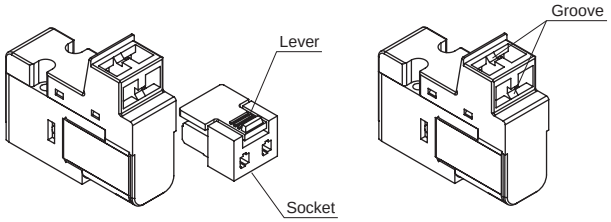

■How to connect lead wire

- Strip the end of the lead wire by about 3 mm. Align the ends of the core wires, insert them into the contact terminal, and crimp with a crimping tool. When crimping, check that both the sheath and core wires are held, and that 0 to 0.5 mm of the core wire ends is visible.
- After crimping, position the contact terminal as shown below, and insert into the square window on the socket. The terminal locks when it is inserted to the end. After inserting, pull the terminal lightly to check that it is locked.

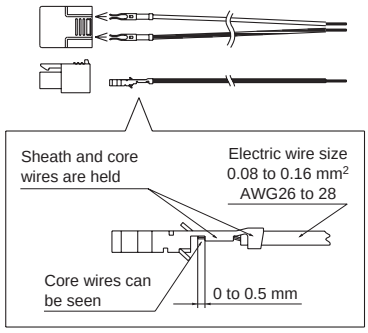

How to use E□J-connector

■Use the lead wire with limited bending as shown in the figure below.

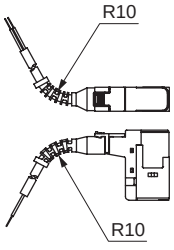

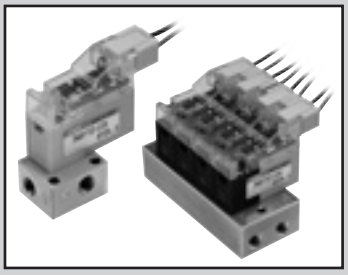

Direct acting 3-port valve

Discrete valve/sub-plate piping

3QB Series

Individual wiring manifold/sub-plate piping

M3QB Series

● Cylinder bore size: ø6 to ø20

JIS symbol

● 2-position
Single (NC)

3QB1-H(P)

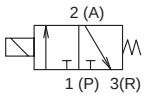

3QB1-HV

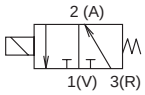

Common specifications

Item	Description
Valve and operation	Direct acting poppet valve
Working fluid	Compressed air, low vacuum
Max. working pressure MPa	Refer to Individual specifications listed below
Min. working pressure MPa	Refer to Individual specifications listed below
Proof pressure MPa	1.05
Ambient temperature °C	0 to 50
Fluid temperature °C	5 to 50
Lubrication	Not available
Degree of protection	Dust-proof
Vibration resistance m/s^2	50 or less
Shock resistance m/s^2	300 or less
Atmosphere	Cannot be used in corrosive gas environments

Electrical specifications

Item		Standard specifications
Rated voltage V	DC	12, 24
Voltage fluctuation range		±10%
Starting current A	24 VDC	0.092
	12 VDC	0.183
Holding current A	24 VDC	0.025
	12 VDC	0.050
Power consumption W		0.6 *1
Thermal class		B

*1: 2.2W for 20ms after start.

Individual specifications

Item	3QB110-H	3QB110-HP	3QB110-HV
Max. working pressure MPa	0.3 *3	0.65	0
Min. working pressure MPa	-0.1 *3	0.1	-0.1

Performance/characteristics

Item	3QB110-H	3QB110-HP	3QB110-HV
Response time *2 ms	5 or less		
Flow characteristics C [$dm^3/(s \cdot bar)$]	1 → 2: 0.11, 2 → 3: 0.11		2 → 1: 0.18, 3 → 2: 0.11
Weight g	12.5		

*2: According to JIS B 8419:2010 Dynamic performance testing.
(Initial values at 20°C, no lubrication, rated voltage, continuous operation)
*3: The weight listed is the weight without the base.

Ozone-proof specifications

Conforms to low-concentration ozone specifications as standard.

CE marking specifications

** - Voltage - **ST**

- Standard voltage of 24 VDC or less is CE marking-compatible even if the model No. is not indicated with "ST".

Specifications for rechargeable battery

Conforms to CKD P4 Series equivalent specifications as standard.

UL standards specifications

** - Voltage - **UL** (Made to order)

How to order

· Sub-plate piping

3QB1 1 0 - M5 - C2 H ◯ —— 3

· Single solenoid valve

3QB1 1 9 - 00 - D2 H P —— 3

· Manifold

M3QB1 1 0 - M5 - C2 H V - 10 - 3

Ⓐ Model No. | Solenoid valve operation classification | Ⓑ Solenoid position | Ⓒ Port size | Ⓓ Connection | Ⓔ Pressure specification | Ⓕ Station No. | Ⓖ Voltage

Code	Description	Ⓐ Model No. 3QB1	Ⓐ Model No. M3QB1
Ⓑ Solenoid position			
1	2-position single normally closed	●	●
8	Mix manifold *1		●
Ⓒ Port size			
M5	M5	●	●
Ⓓ Electrical connections			
C-connector (lead wire lateral direction)			
C2	Lead wire (300 mm) with surge suppressor/lamp	●	●
C20	Lead wire (500 mm) with surge suppressor/lamp	●	●
C21	Lead wire (1000 mm) with surge suppressor/lamp	●	●
C22	Lead wire (2000 mm) with surge suppressor/lamp	●	●
C2N	Without lead wire (without socket)	●	●
C3	Without lead wire (with socket/terminal)	●	●
D-connector (lead wire upward direction)			
D2	Lead wire (300 mm) with surge suppressor/lamp	●	●
D20	Lead wire (500 mm) with surge suppressor/lamp	●	●
D21	Lead wire (1000 mm) with surge suppressor/lamp	●	●
D22	Lead wire (2000 mm) with surge suppressor/lamp	●	●
D2N	Without lead wire (without socket)	●	●
D3	Without lead wire (with socket/terminal)	●	●
Ⓔ Pressure specification			
Blank	Positive/negative pressure specification (-0.1 to 0.3 MPa) *2	●	●
P	Positive pressure specification (0.1 to 0.65 MPa)	●	●
V	Negative pressure specification (-0.1 to 0 MPa)	●	●
Ⓕ Station No.			
2 to 20	2 stations to 20 stations		●
Ⓖ Voltage			
3	24 VDC	●	●
4	12 VDC	●	●

Precautions for model No. selection

*1 : Combination with a masking plate.
The pressure specification options Blank, P and V cannot be combined.
*2 : Vacuum the negative pressure from port 3 (R).
This will be the NO specification.

[Example of model No.]

M3QB110-M5-C2H-7-3

Ⓐ Model : M3QB1
Ⓑ Solenoid position : 2-position single
Ⓒ Port size : M5
Ⓓ Electrical connections : Lead wire (300 mm)
Ⓔ Pressure specification : Blank
Ⓕ Station No. : 7 stations
Ⓖ Voltage : 24 VDC

How to order masking plate kit

3QB1 - MP - KIT

3QB1 - MP - KIT - V *3

*3: Pressure specification (V dedicated)
* Gasket/mounting screw included

Electrical connections

● 3QB

C2	C-connector with lead wire with surge suppressor and indicator lamp	D2	D-connector with lead wire with surge suppressor and indicator lamp
· Lead wire length C2 : 300 mm C20 : 500 mm C21 : 1000 mm C22 : 2000 mm	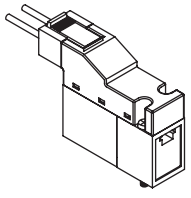	· Lead wire length D2 : 300 mm D20 : 500 mm D21 : 1000 mm D22 : 2000 mm	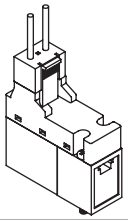

Dimensions (3QB110)

3QB110-M5 Options Blank, P

· 2-position single: C-connector (C2/C3)

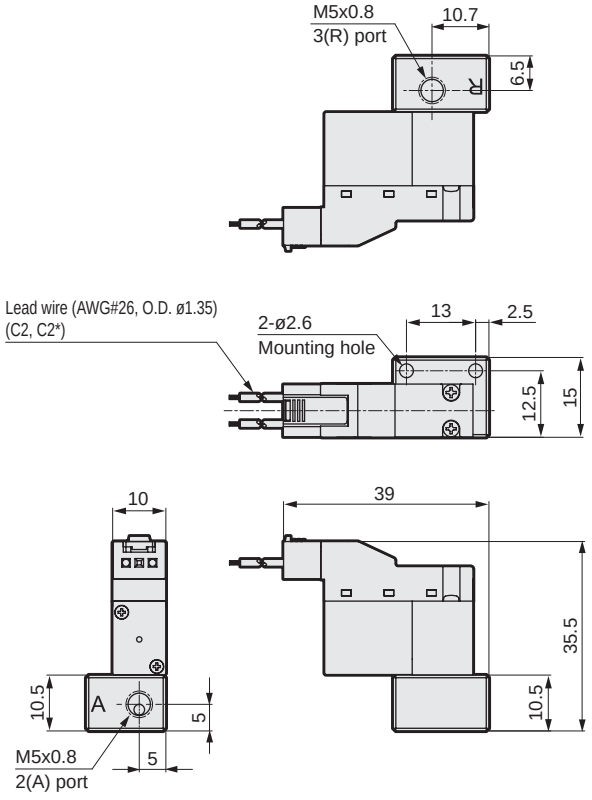

· D-connector (D2/D3)

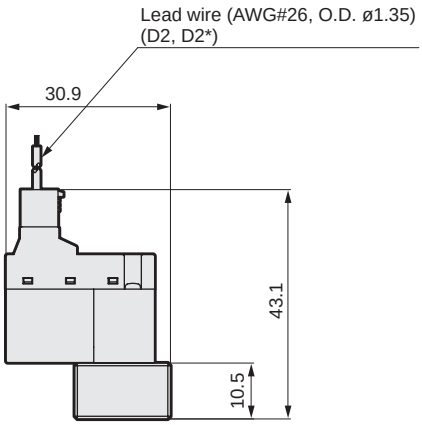

3QB110-M5 Option V

· 2-position single: C-connector (C2/C3)

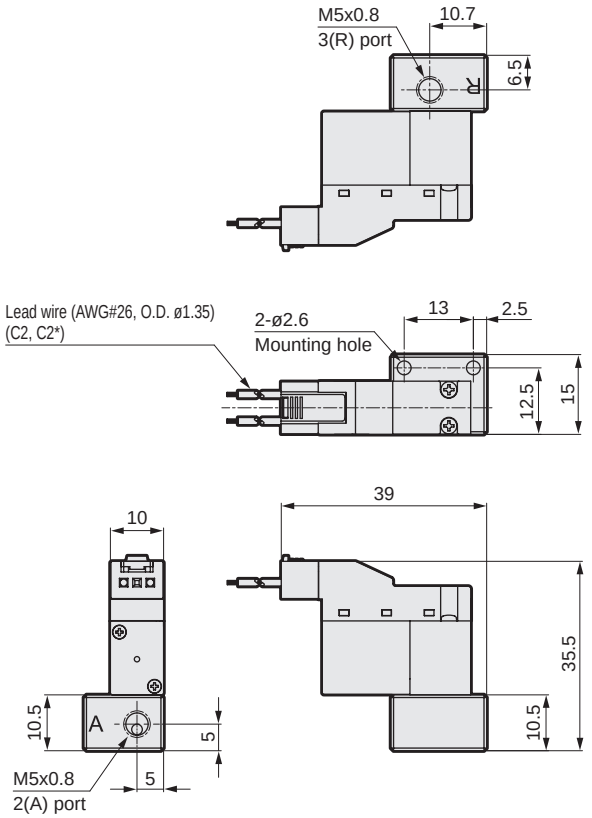

· D-connector (D2/D3)

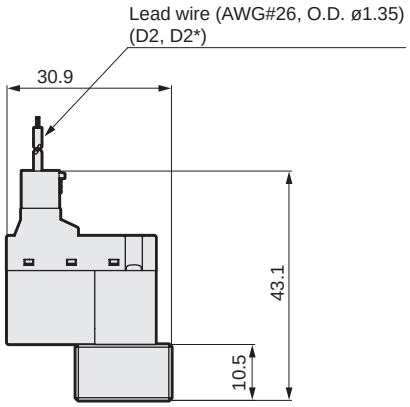

Dimensions (3QB119)

3QB119-00 Options Blank, P

· 2-position single: C-connector (C2/C3)

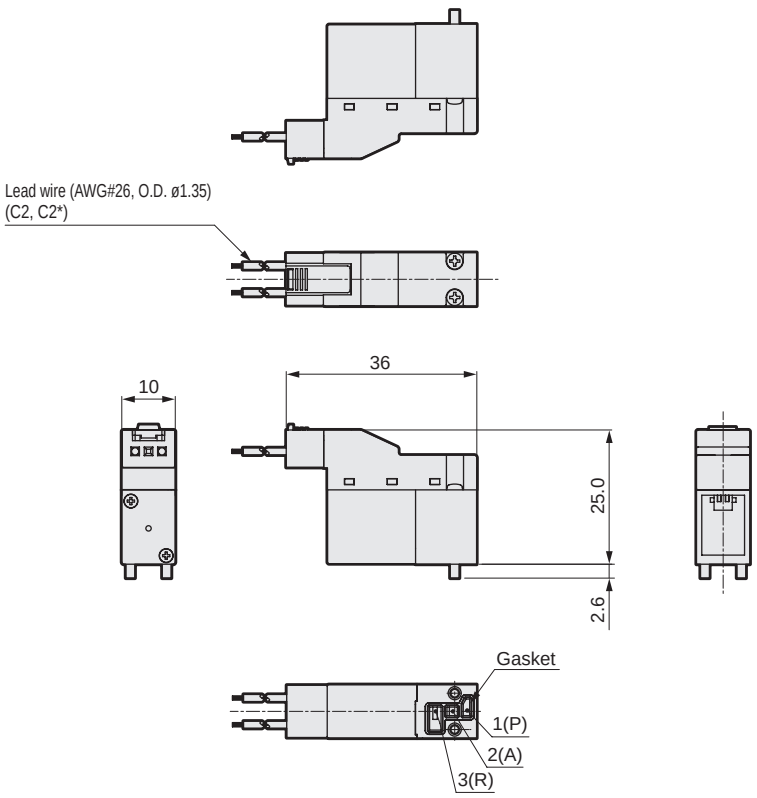

· D-connector (D2/D3)

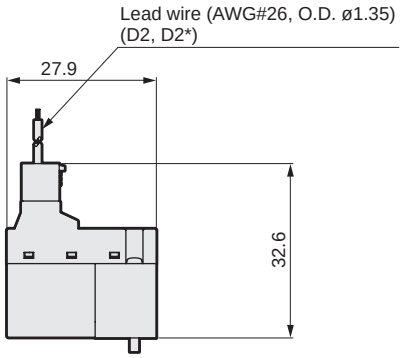

Single solenoid valve back surface

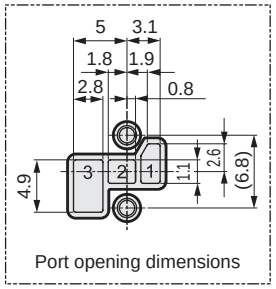

3QB119-00 Option V

· 2-position single: C-connector (C2/C3)

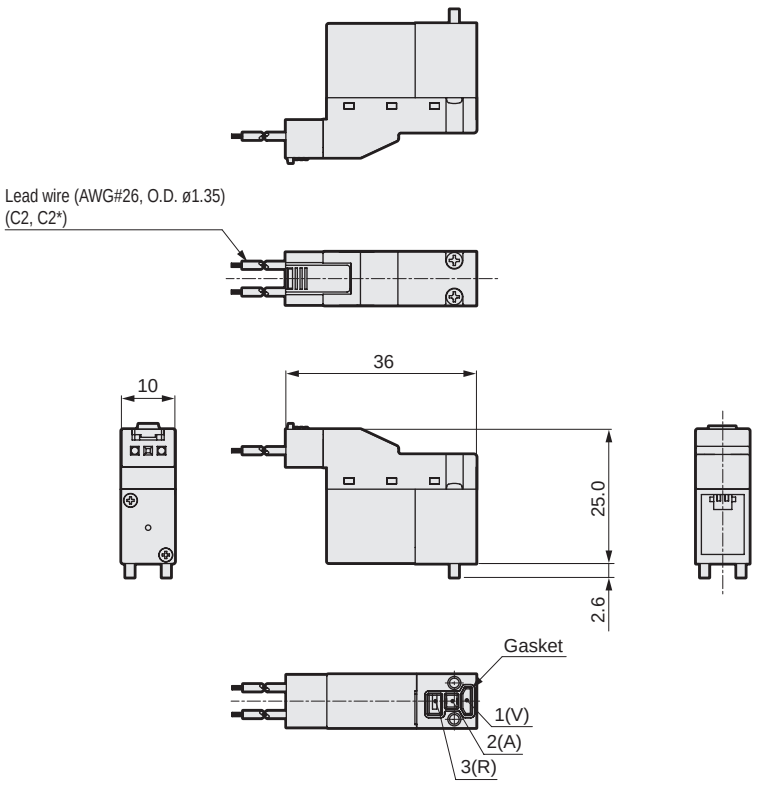

· D-connector (D2/D3)

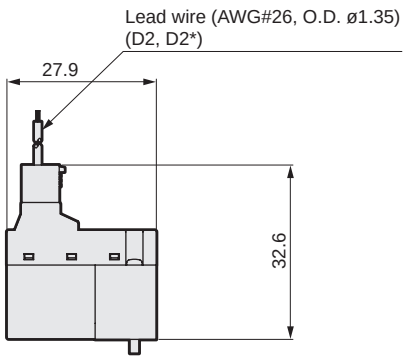

Single solenoid valve back surface

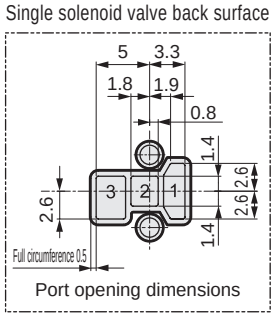

Dimensions (M3QB110)

M3QB110-M5 Options Blank, P

· 2-position single: C-connector (C2/C3)

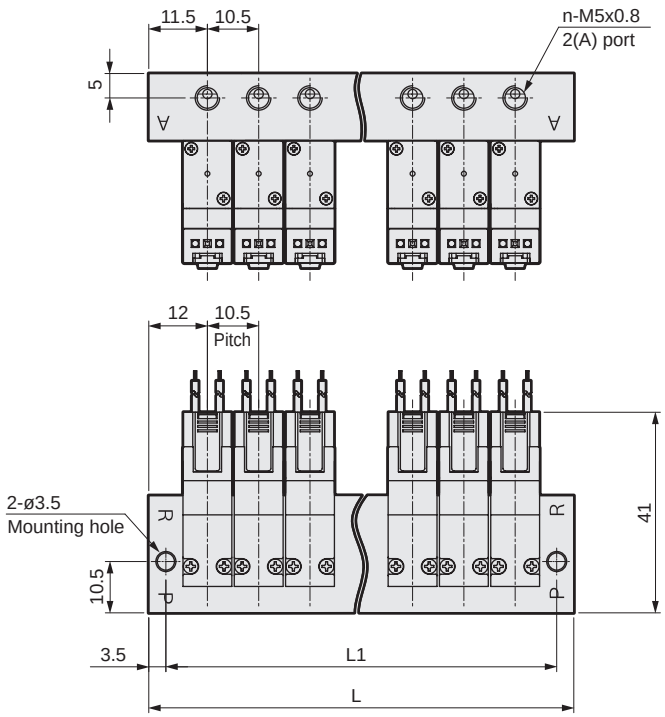

· D-connector (D2/D3)

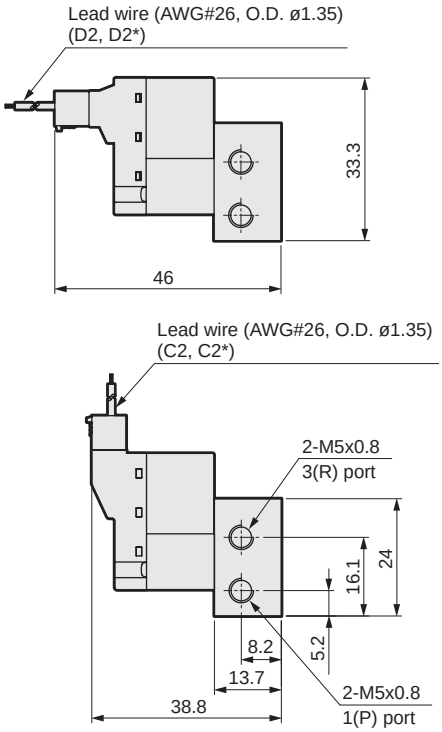

Station No.	2	3	4	5	6	7	8	9	10	11	12	13	14	15	16	17	18	19	20
L	34.5	45	55.5	66	76.5	87	97.5	108	118.5	129	139.5	150	160.5	171	181.5	192	202.5	213	223.5
L1	27.5	38	48.5	59	69.5	80	90.5	101	111.5	122	132.5	143	153.5	164	174.5	185	195.5	206	216.5

M3QB110-M5 Option V

· 2-position single: C-connector (C2/C3)

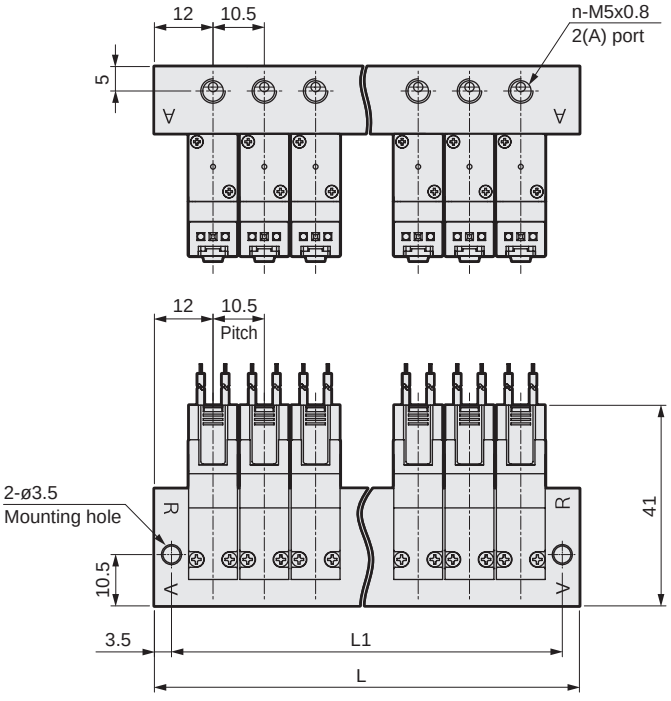

· D-connector (D2/D3)

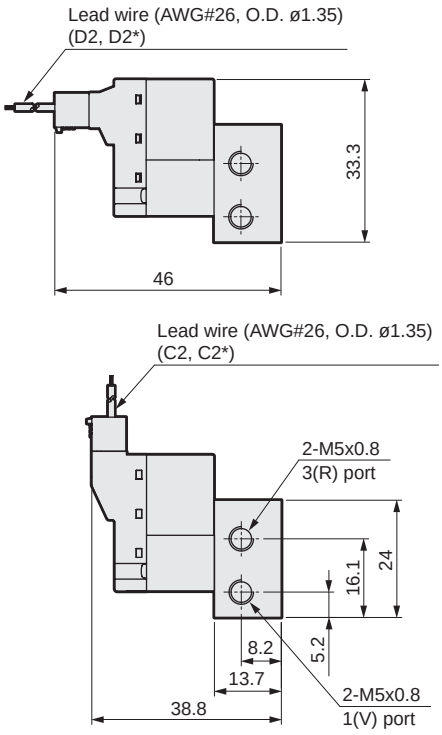

Station No.	2	3	4	5	6	7	8	9	10	11	12	13	14	15	16	17	18	19	20
L	34.5	45	55.5	66	76.5	87	97.5	108	118.5	129	139.5	150	160.5	171	181.5	192	202.5	213	223.5
L1	27.5	38	48.5	59	69.5	80	90.5	101	111.5	122	132.5	143	153.5	164	174.5	185	195.5	206	216.5

Internal structure and parts list

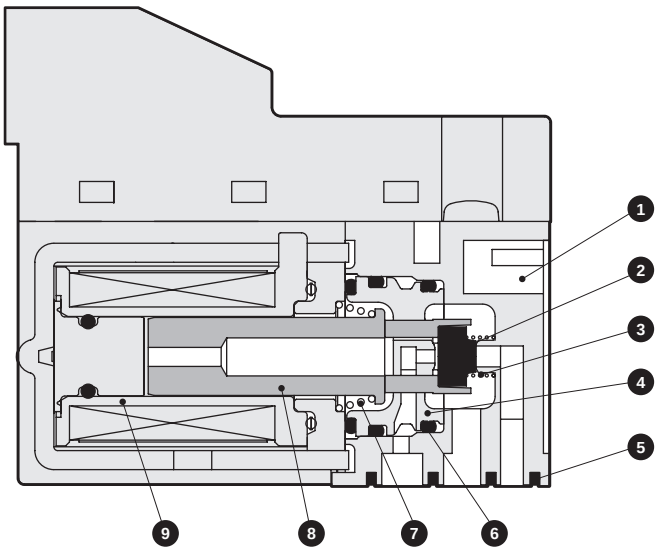

No.	Part name	Material
1	Body	Resin
2	Valve seat	Nitrile rubber
3	Valve spring	Stainless steel
4	Plug	Resin
5	Body gasket	Fluoro rubber
6	O-ring	Fluoro rubber
7	Plunger spring	Stainless steel
8	Plunger	Stainless steel
9	Coil assembly	-

C-/D-connector wiring method

Wire (1) to (4) referring to the figure below.

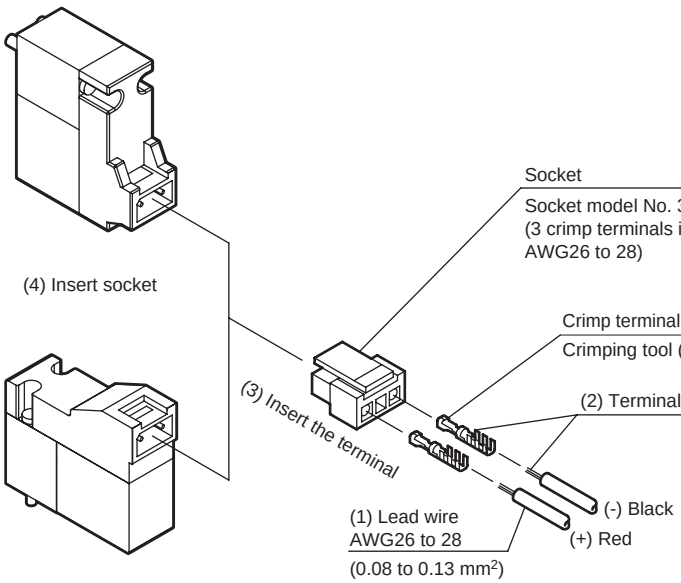

[Procedure]

(1) Peel the sheath at the end of the lead wire by 2 to 3 mm.
(2) Crimp the lead wire with a dedicated tool.
(3) Insert the terminal into holes at both ends of the socket.
(Note) Check the orientation for insertion.
(4) Insert the socket into the solenoid valve connector section.

* For the details of crimp terminals and crimping tools, contact CKD.

Note: Be careful with the polarity of ⊕ ⊖ with the lamp and surge suppressor equipped models.
An incorrect polarity will not result in a short-circuit, but the valve will not operate.

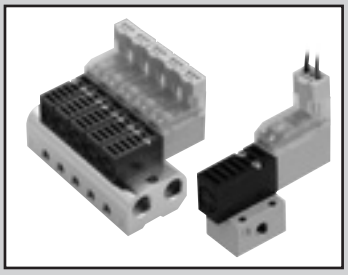

Direct acting 3-port valve

Discrete valve body piping/sub-plate piping

3QRA/3QRB Series

Individual wiring manifold body piping/sub-plate piping

M3QRA/M3QRB Series

● Cylinder bore size: ø6 to ø25

JIS symbol

● 2-position universal (Self-reset)

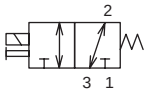

Port No.item1.2.3is
PortG1:P,NC
PortG2:A,COM
PortG3:R,NO

(self-hold)

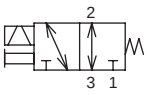

Port No.item1.2.3is
PortG1:P,NC
PortG2:A,COM
PortG3:R,NO

Common specifications

Item	Description
Valve and operation	Direct acting poppet valve
Working fluid	Compressed air, low vacuum
Max. working pressure MPa	0.70
Min. working pressure MPa	Low vacuum: -100 kPa
Proof pressure MPa	1.05 (low vacuum: -101 kPa)
Max. working pressure differentialMPa	0.70
Ambient temperature °C	-5 to 50 (no freezing)
Fluid temperature °C	5 to 50
Lubrication	Unavailable - *1
Degree of protection	Dust-proof
Vibration resistance m/s^2	50 or less
Shock resistance m/s^2	300 or less
Atmosphere	Cannot be used in corrosive gas environment.

*1: Lubrication will degrade the performance.

Electrical specifications

Item		Standard specifications	Large flow rate specifications H
Rated voltage V	DC	24, 12	
Energizing rate		Intermittent *2	Continuous *3
Voltage fluctuation range		±10%	
Starting current A	24 VDC	-	0.13
	12 VDC	-	0.27
Holding current A	24 VDC	0.08	0.10
	12 VDC	0.17	0.20
Power consumption W		2.0	2.4 *4
Thermal class		B	

*2: Limit continuous energizing to within 5 minutes and energization ratio to 50% or less. Min. time of excitation for self-holding is 50 ms.

*3: Refer to the precautions for continuous energization on page 1568.

*4: 3.2W for 20ms after start.

Individual specifications

Item		3QRA11	3QRB11	3QRA12	3QRB12	M3QRA11	M3QRB11	M3QRA12	M3QRB12
Port size	Port 1	M5				Rc1/8			
	Port 2					M5			
	Port 3					Rc1/8			

Performance/characteristics

Item	3QRA11	3QRB11	3QRA12	3QRB12	M3QRA11	M3QRB11	M3QRA12	M3QRB12
Response time *5 ON/OFF ms	4±1/1.5±1		5 or less		4±1/1.5±1		5 or less	
Weight g	24	27	28	31	19 (single solenoid valve)		23 (single solenoid valve)	

*5:JIS B 8419:2010 Dynamic performance test depends.
(Initial values at supply pressure 0.5MPa, 20°C, no lubrication, rated voltage, continuous operation)

Flow characteristics

Model No.	Option	Port 1→2		Port 2→1		Port 2→3		Port 3→2	
		C [$dm^3/(s \cdot bar)$]	S (ref val) [mm^2]	C [$dm^3/(s \cdot bar)$]	S (ref val) [mm^2]	C [$dm^3/(s \cdot bar)$]	S (ref val) [mm^2]	C [$dm^3/(s \cdot bar)$]	S (ref val) [mm^2]
3QRA1	Blank	0.30	1.5	0.32	1.6	0.32	1.6	0.30	1.5
	H	0.36	1.8	0.38	1.9	0.38	1.9	0.36	1.8
3QRB1	Blank	0.30	1.5	0.34	1.7	0.36	1.8	0.34	1.7
	H	0.36	1.8	0.40	2.0	0.40	2.0	0.40	2.0
M3QRA1	Blank	0.30	1.5	0.32	1.6	0.32	1.6	0.30	1.5
	H	0.36	1.8	0.38	1.9	0.38	1.9	0.36	1.8
M3QRB1	Blank	0.30	1.5	0.34	1.7	0.36	1.8	0.34	1.7
	H	0.36	1.8	0.40	2.0	0.40	2.0	0.40	2.0

Ozone-proof specifications

Conforms to low-concentration ozone specifications as standard.

Specifications for rechargeable battery

Conforms to CKD P4 Series equivalent specifications as standard.

CE marking specifications

Available as standard.

・Standard voltage of 24 VDC or less is CE marking-compatible even if the model No. is not indicated with "ST".

How to order

· Single solenoid valve

3QRB1 1 0 - M5 - D2 ◯ —— 3

· Single solenoid valve

3QRA1 1 9 - M5 - D2 ◯ —— 3

3QRB1 1 9 - 00 - D2 ◯ —— 3

· Manifold

M3QRA1 1 0 - M5 - C2 ◯ - 8 - 3

Ⓐ Model No.
Ⓑ Solenoid position
Solenoid valve operation classification
Ⓒ Port size
Ⓓ Electrical connections
Ⓔ Flow rate
Ⓕ Station No.
Ⓖ Voltage

Code	Description	Ⓐ Model No. Single unit Body piping 3QRA1	Single unit Sub-plate piping 3QRB1	Manifold Body piping M3QRA1	Manifold Sub-plate piping M3QRB1
Ⓑ Solenoid position					
1	2-position single (self-reset)	●	●	●	●
2	2-position single (self-hold) *2	●	●	●	●
8	Mix manifold *3			●	●
Ⓒ Port size					
M5	M5	●	●	●	●
Ⓓ Electrical connections					
Grommet lead wire					
Blank	Grommet lead wire (300 mm) *1	●	●	●	●
C-connector (lead wire lateral direction)					
C2	Lead wire (300 mm) with surge suppressor/lamp	●	●	●	●
C20	Lead wire (500 mm) with surge suppressor/lamp	●	●	●	●
C21	Lead wire (1000 mm) with surge suppressor/lamp	●	●	●	●
C22	Lead wire (2000 mm) with surge suppressor/lamp	●	●	●	●
C3	Without lead wire, with surge suppressor/lamp	●	●	●	●
D-connector (lead wire upward direction)					
D2	Lead wire (300 mm) with surge suppressor/lamp	●	●	●	●
D20	Lead wire (500 mm) with surge suppressor/lamp	●	●	●	●
D21	Lead wire (1000 mm) with surge suppressor/lamp	●	●	●	●
D22	Lead wire (2000 mm) with surge suppressor/lamp	●	●	●	●
D3	Without lead wire, with surge suppressor/lamp	●	●	●	●
Ⓔ Flow rate					
Blank	Standard 2 W	●	●	●	●
H	Large flow rate 3.2 W→2.4 W	●	●	●	●
Ⓕ Station No.					
2 to 20	2 stations to 20 stations			●	●
Ⓖ Voltage					
3	24 VDC	●	●	●	●
4	12 VDC	●	●	●	●

Precautions for model No. selection

*1 : For connection with the grommet lead wire (300 mm), "2", 2-position single solenoid (self-hold) for Ⓑ Solenoid position, and "H", large flow rate for Ⓔ Flow rate are not selectable.
*2 : For "2", 2-position single solenoid (self-hold) for Ⓑ Solenoid position, "H" for Ⓔ Flow rate and "4" for Ⓖ Voltage are not selectable.
*3 : Combination with a masking plate.
Combination of A and B types is not available.
Solenoid positions "1" and "2" cannot be mixed.

[Example of model No.]

M3QRA110-M5-C2-7-3

Ⓐ Model: M3QRA1 (body piping)
Ⓑ Solenoid position : 2-position single
Ⓒ Port size : M5
Ⓓ Electrical connections : Lead wire 300 mm with surge suppressor and indicator lamp
Ⓔ Flow rate : Standard 2 W
Ⓕ Station No. : 7 stations
Ⓖ Voltage : 24 VDC

How to order masking plate kit

3QR1 - MP - KIT

* Gasket/mounting screw included

Electrical connections

● 3QRA11/3QRB11

Blank Grommet lead wire

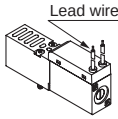

C2 C-connector/with lead wire, with surge suppressor/lamp

· Lead wire length
C2 : 300 mm
C20: 500 mm
C21: 1000 mm
C22: 2000 mm

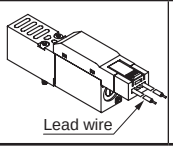

C3 C-connector/without lead wire, with surge suppressor/lamp

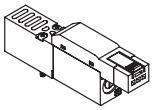

D2 D-connector/with lead wire, with surge suppressor/lamp

· Lead wire length
D2 : 300 mm
D20: 500 mm
D21: 1000 mm
D22: 2000 mm

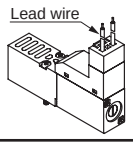

D3 D-connector/without lead wire, with surge suppressor/lamp

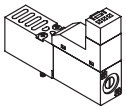

● 3QRA12/3QRB12

C2 C-connector/with lead wire, with surge suppressor/lamp

· Lead wire length
C2 : 300 mm
C20: 500 mm
C21: 1000 mm
C22: 2000 mm

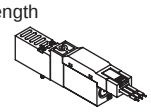

C3 C-connector/without lead wire, with surge suppressor/lamp

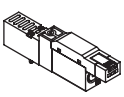

D2 D-connector/with lead wire, with surge suppressor/lamp

· Lead wire length
D2 : 300 mm
D20: 500 mm
D21: 1000 mm
D22: 2000 mm

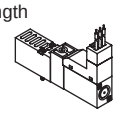

D3 D-connector/without lead wire, with surge suppressor/lamp

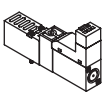

Dimensions (3QRA11/3QRB11)

3QRA110-M5

• 2-position single: grommet lead wire

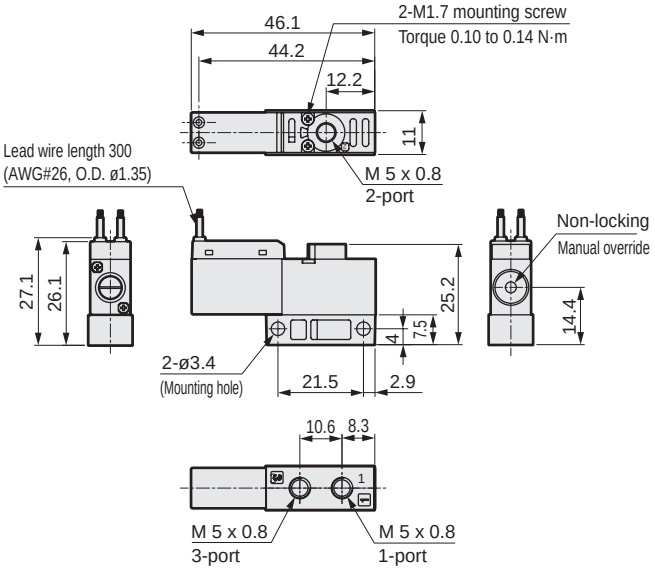

• C-connector (C2/C3)

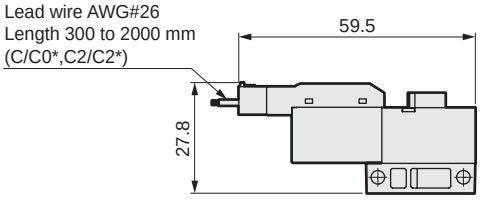

• D-connector (D2/D3)

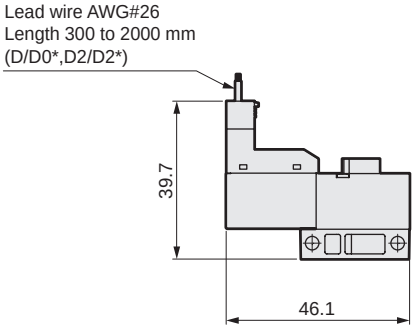

3QRB110-M5

• 2-position single: grommet lead wire

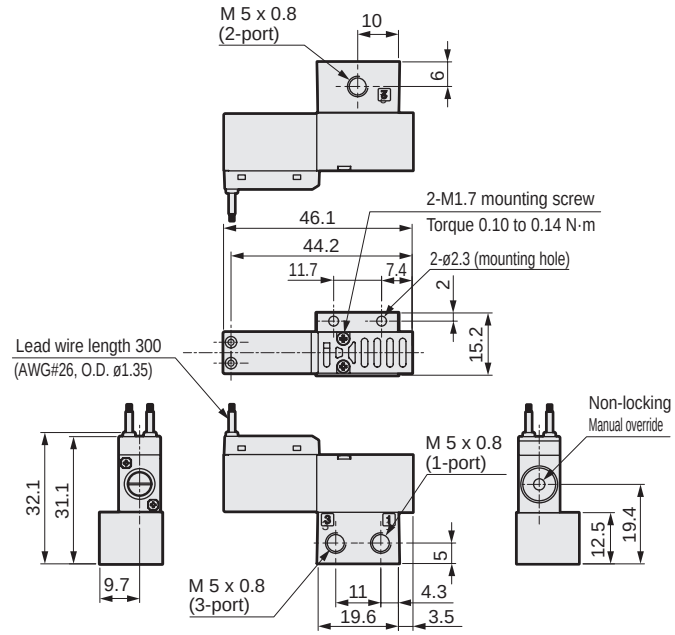

• C-connector (C2/C3)

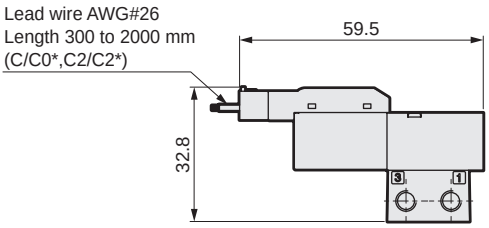

• D-connector (D2/D3)

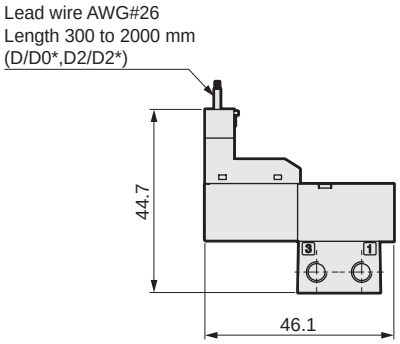

3QRA/B119-00 (single solenoid valve)

• 2-position single: grommet lead wire

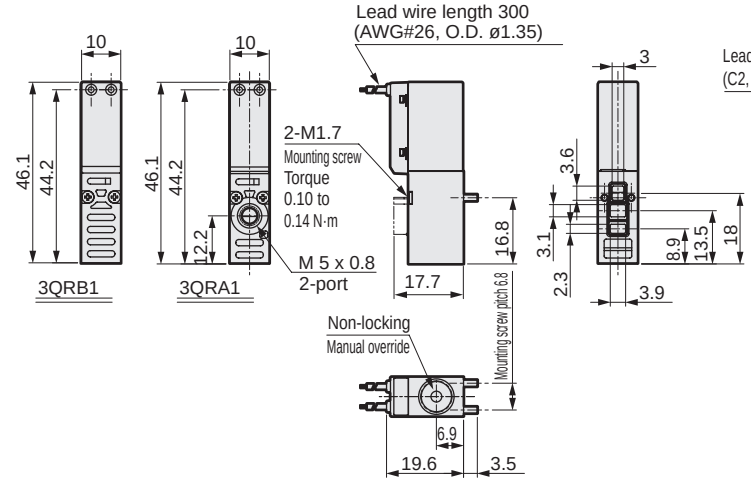

• C-connector (C2/C3)

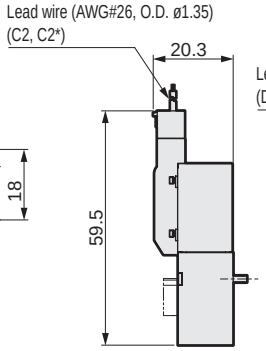

• D-connector (D2/D3)

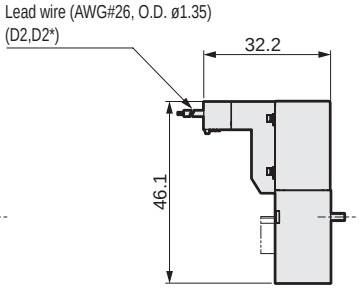

Dimensions (M3QRA11/M3QRB11)

M3QRA110-M5

· 2-position single: grommet lead wire

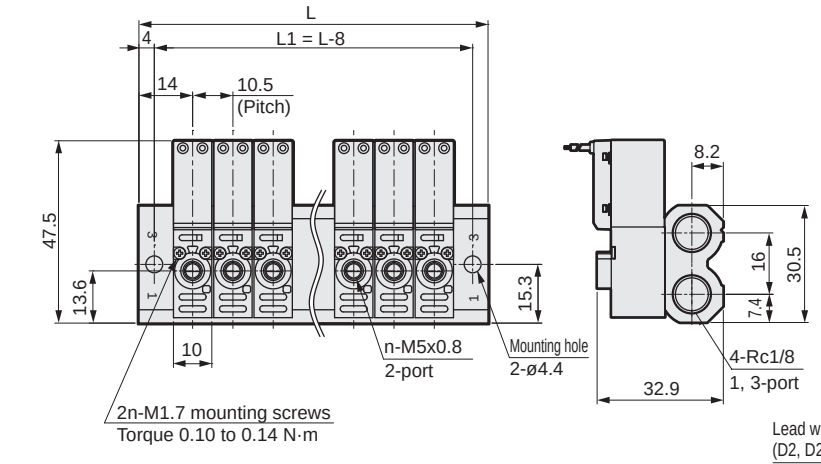

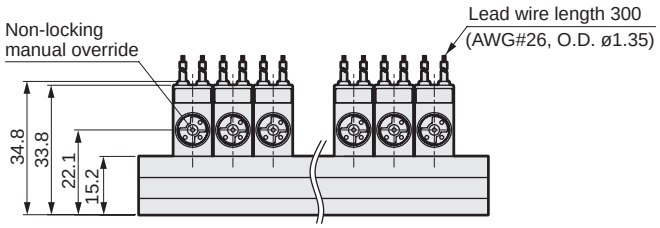

· C-connector (C2/C3)

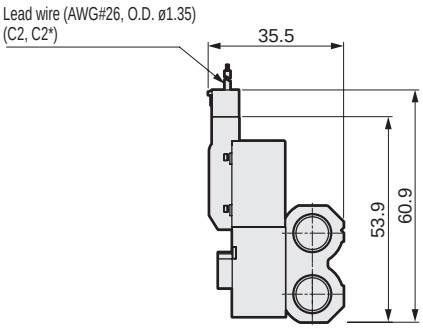

· D-connector (D2/D3)

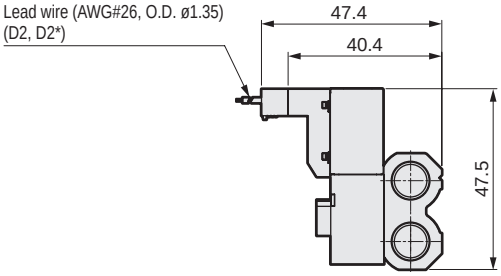

M3QRB110-M5

· 2-position single: grommet lead wire

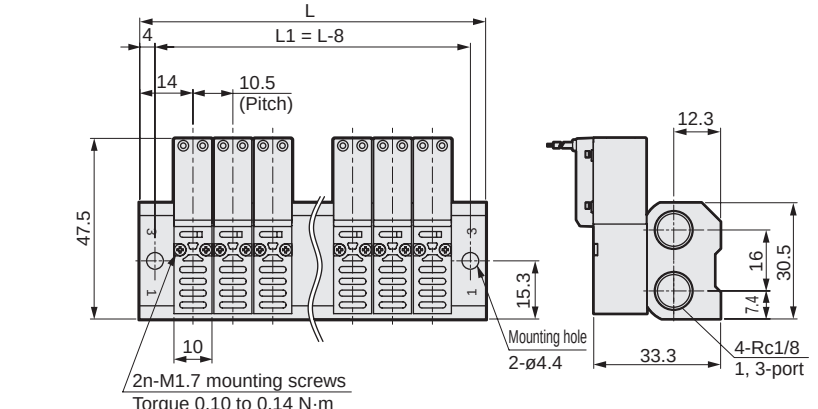

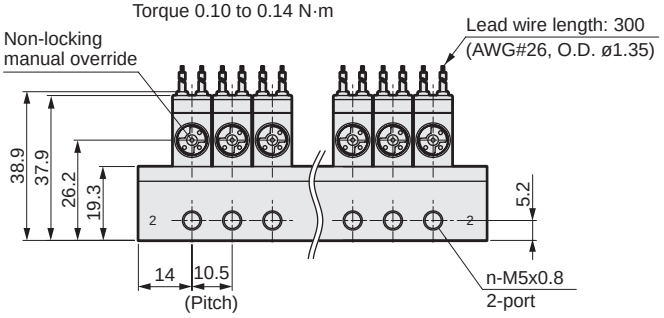

· C-connector (C2/C3)

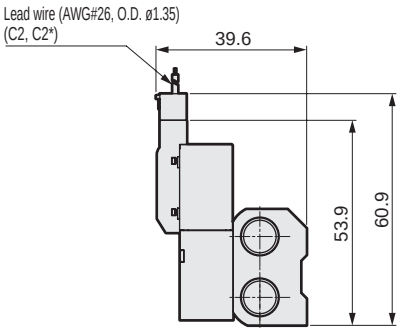

· D-connector (D2/D3)

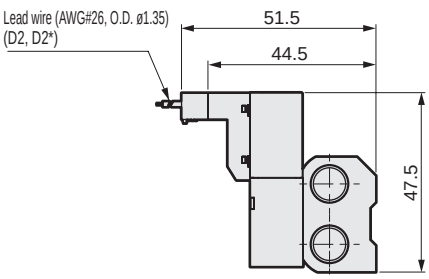

Station No.	2	3	4	5	6	7	8	9	10	11	12	13	14	15	16	17	18	19	20
L	38.5	49.0	59.5	70.0	80.5	91.0	101.5	112.0	122.5	133.0	143.5	154.0	164.5	175.0	185.5	196.0	206.5	217.0	227.5
L1	30.5	41.0	51.5	62.0	72.5	83.0	93.5	104.0	114.5	125.0	135.5	146.0	156.5	167.0	177.5	188.0	198.5	209.0	219.5

Dimensions (3QRA12/3QRB12)

3QRA120-M5

· 2-position single: C-connector (C2/C3)

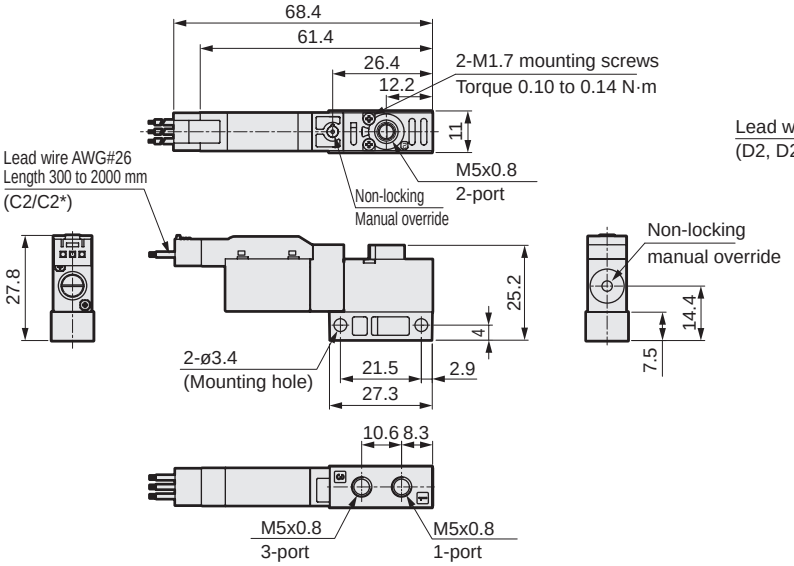

· D-connector (D2/D3)

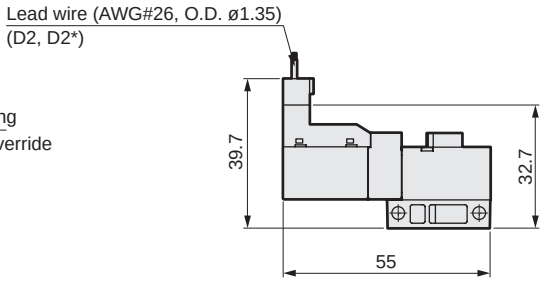

3QRB120-M5

· 2-position single: C-connector (C2/C3)

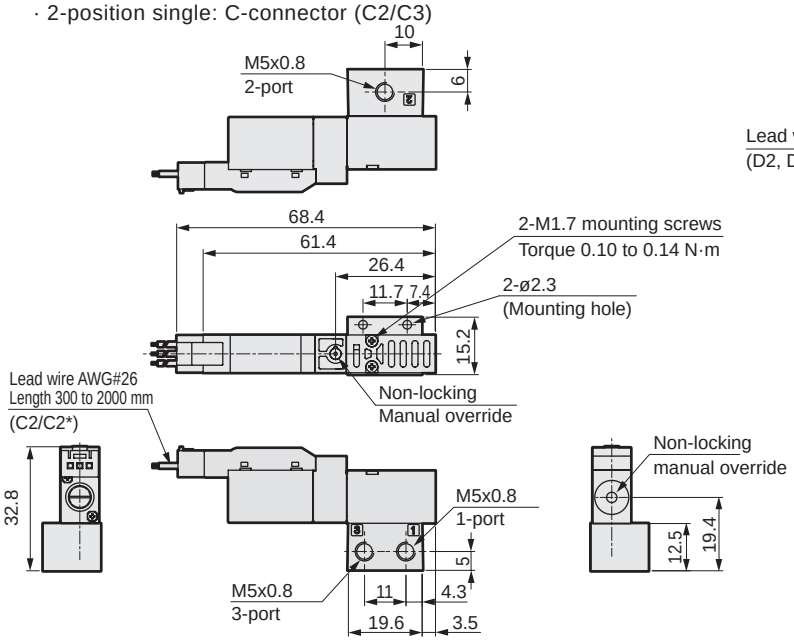

· D-connector (D2/D3)

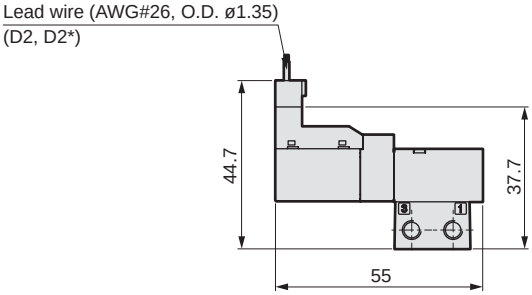

3QRA/3QRB129-00 (single solenoid valve)

· 2-position single: C-connector (C2/C3)

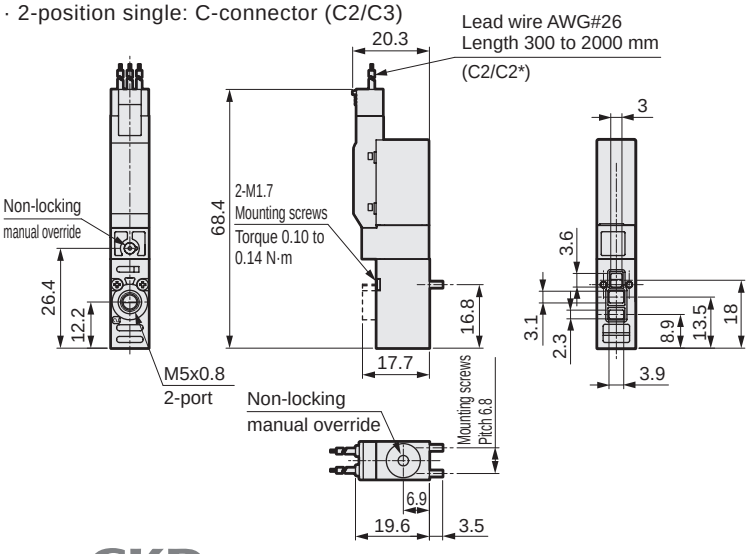

· D-connector (D2/D3)

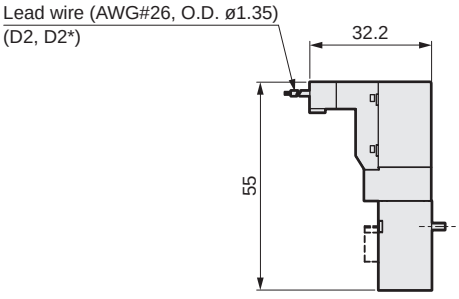

Dimensions (M3QRA12/M3QRB12)

M3QRA120-M5

· 2-position single: C-connector (C2/C3)

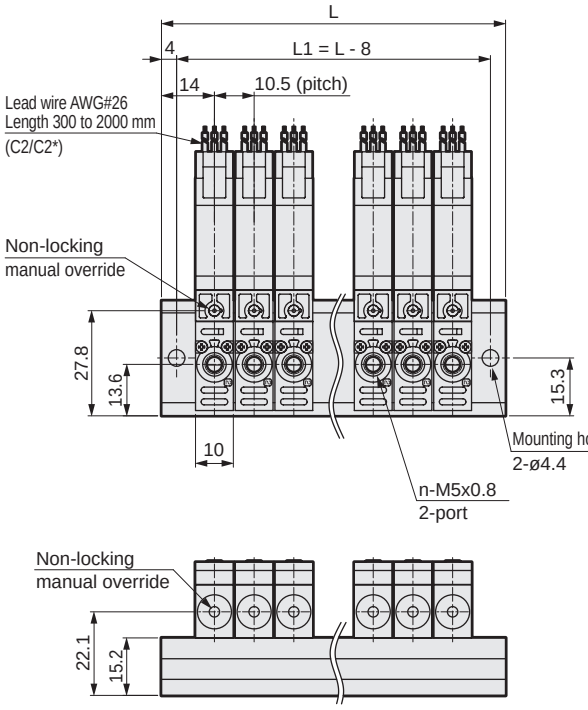

· D-connector (D2/D3)

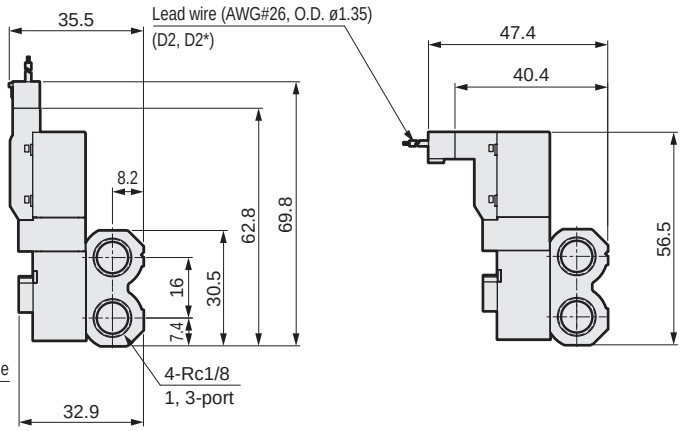

M3QRB120-M5

· 2-position single: C-connector (C2/C3)

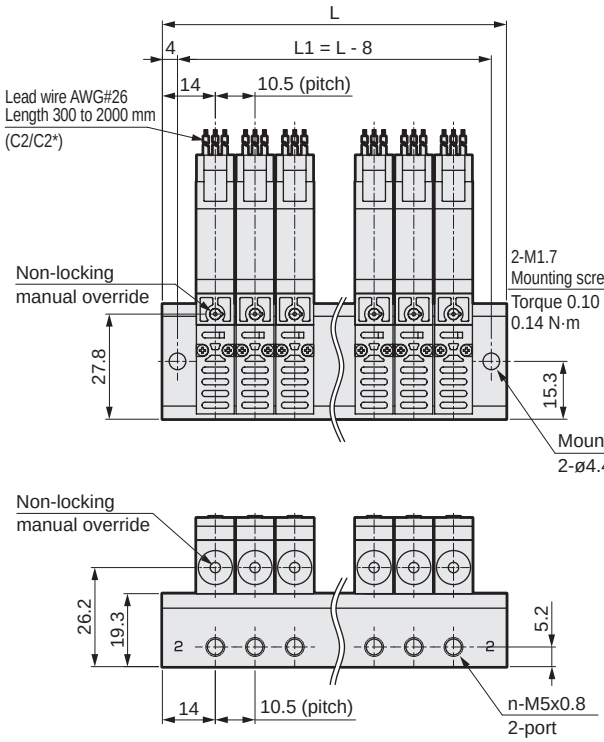

· D-connector (D2/D3)

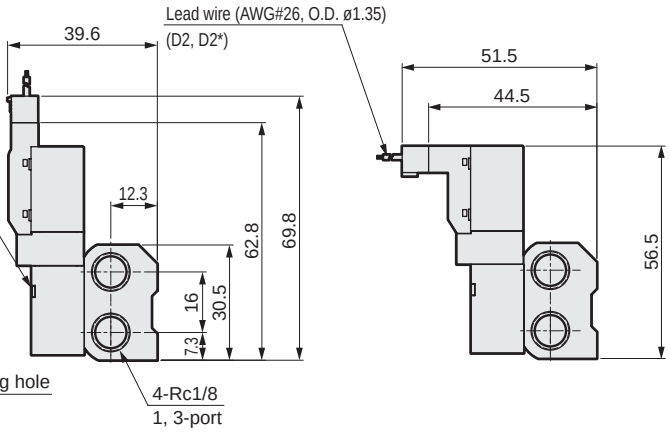

Station No.	2	3	4	5	6	7	8	9	10	11	12	13	14	15	16	17	18	19	20
L	38.5	49.0	59.5	70.0	80.5	91.0	101.5	112.0	122.5	133.0	143.5	154.0	164.5	175.0	185.5	196.0	206.5	217.0	227.5
L1	30.5	41.0	51.5	62.0	72.5	83.0	93.5	104.0	114.5	125.0	135.5	146.0	156.5	167.0	177.5	188.0	198.5	209.0	219.5

Internal structure and parts list

● 2-position single (self-reset)

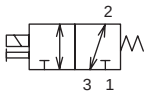

Port No.No. 1.2.3 is
Port G1:P,NC
Port G2:A,COM
Port G3:R,NO.

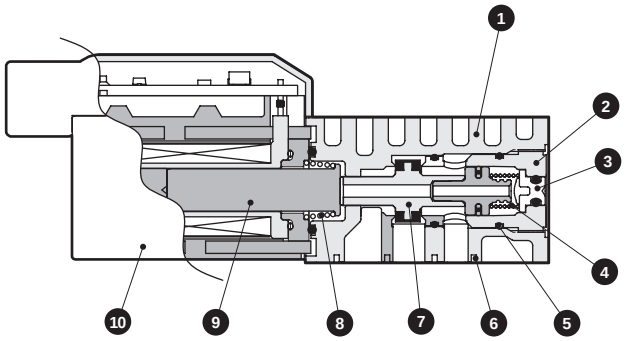

Main parts list

No.	Part name	Material
1	Body	Resin
2	Body (plug)	Resin
3	Manual button	Resin
4	Valve spring	Stainless steel
5	O-ring	Fluoro rubber
6	Body gasket	Fluoro rubber
7	Valve body	Aluminum, Hydrogenated nitrile rubber
8	Plunger spring	Stainless steel
9	Plunger	Stainless steel
10	Coil assembly	-

● 2-position single (self-hold)

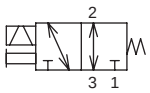

Port numbers 1, 2, and 3 are
Port 1: P, NC
Port 2: A, COM
Port 3: R, NO.

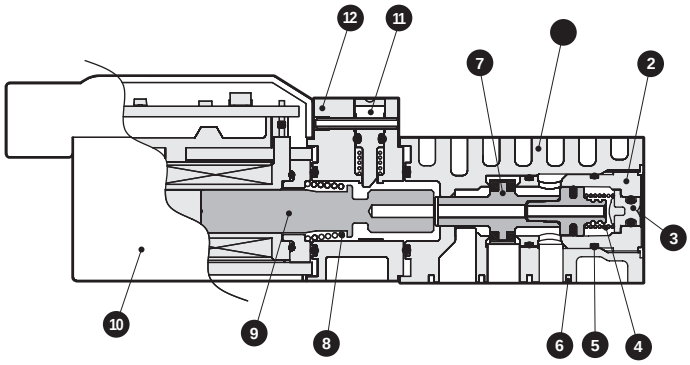

Main parts list

No.	Part name	Material
1	Body	Resin
2	Body (plug)	Resin
3	Manual button A	Resin
4	Valve spring	Stainless steel
5	O-ring	Fluoro rubber
6	Body gasket	Fluoro rubber
7	Valve body	Aluminum, Hydrogenated nitrile rubber
8	Plunger spring	Stainless steel
9	Plunger	Stainless steel
10	Coil assembly	-
11	Manual button B	Resin
12	Manual block	Resin

Operational principle

● 2-position single (self-reset)

The 3QR Series structure is a pressure balanced type poppet valve, which is not affected by the working pressure and achieves a low wattage, large flow rate performance. It can be pressurized from any of ports 1, 2, or 3. The stem assembly valve seat and packing have the same diameter, so each port pressure differential is canceled by the stem assembly's through hole and pressure is balanced at both ON and OFF.

● When not energized

The stem assembly is pushed toward port 1 side by the plunger spring force transmitted by the plunger.

Port 1 is closed due to the stem assembly valve seat and packing. Ports 2 and 3 are opened.

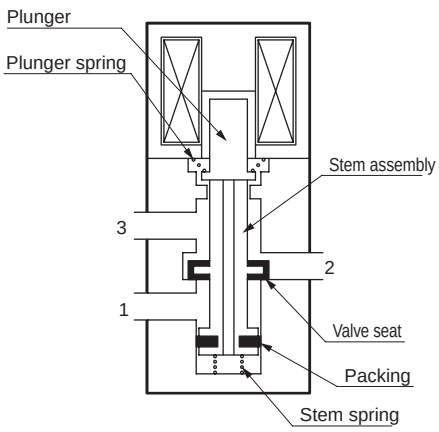

● When energized

When the coil is energized, the plunger is suctioned to the coil side, the stem assembly is actuated by the stem spring, and ports 1 and 2 open. Port 3 is closed.

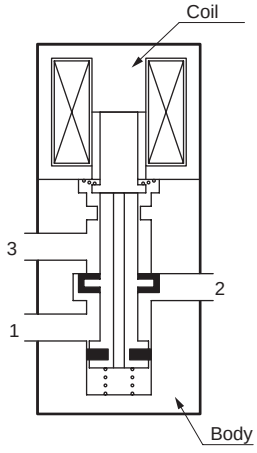

● 2-position single (self-hold)

[Input signal and solenoid valve status]

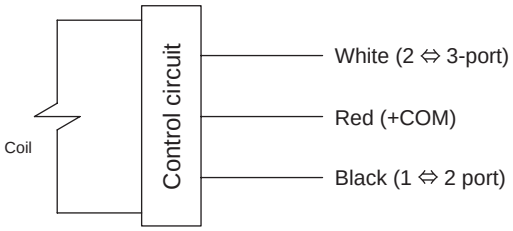

[Energization and solenoid valve status]

(1) Energized to red and black (Green indicator lamp on)

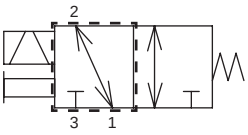

(2) Energized to red and white (Red indicator lamp on)

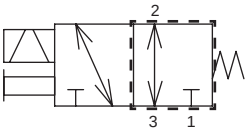

[Operational principle]

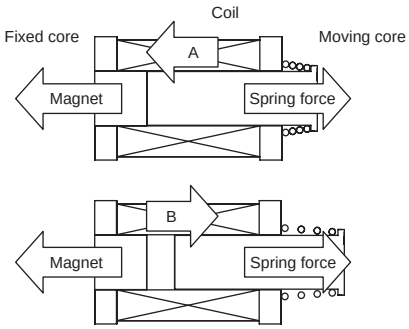

[Energized to red and black]

The coil force is in the A direction, causing the magnet force + coil force A to exceed the spring force: thus, the fixed core and moving core will adhere.
(Even if power is shut OFF, it will remain adhered.)

[Energized to red and white]

The coil force is in the B direction, causing the coil force B + spring force to exceed the magnet force: thus, the fixed core and moving core will separate.
(Even if power is shut OFF, it will remain separated.)

C-/D-connector wiring method

● 2-position single (self-reset)

Wire (1) to (4) referring to the figure below.

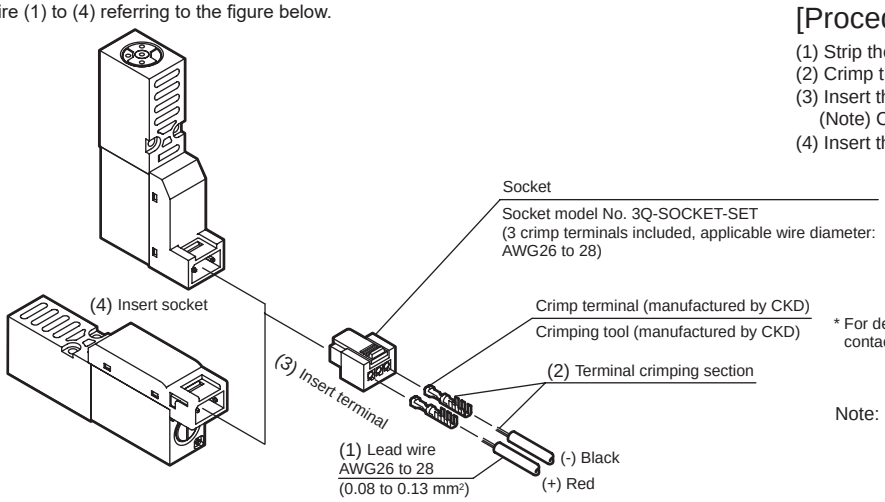

[Procedure]

(1) Strip the sheath at the end of the lead wire by 2 to 3 mm.
(2) Crimp the lead wire with a dedicated tool.
(3) Insert the terminal into holes at both ends of the socket.
(Note) Check the orientation for insertion.
(4) Insert the socket into the solenoid valve connector section.

* For details of crimp terminals and crimping tools, contact CKD separately.

Note: Pay attention to the polarity of ⊕ ⊖ for the optional H (Large flow rate) specification.
Incorrect polarity will not result in a short-circuit, but the valve will not operate.

● 2-position single (self-hold)

Wire (1) to (4) referring to the figure below.

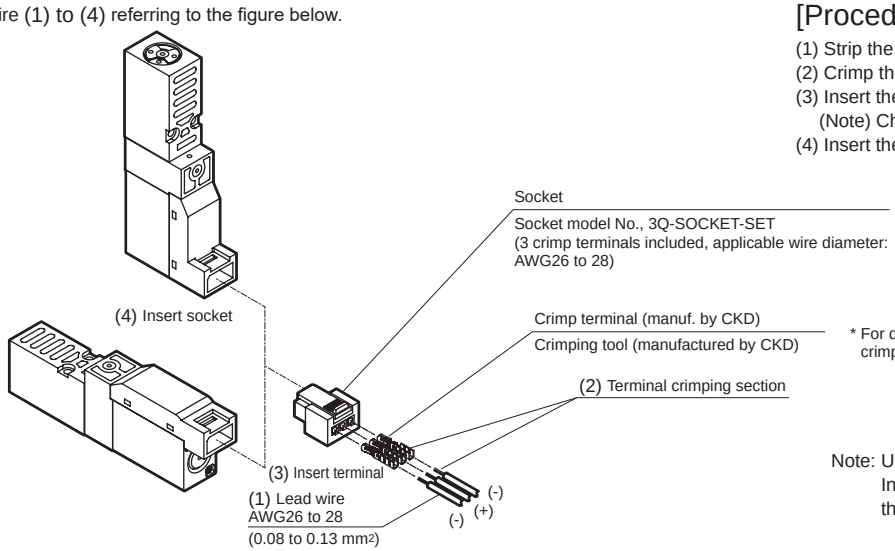

[Procedure]

(1) Strip the sheath at the end of the lead wire by 2 to 3 mm.
(2) Crimp the lead wire with a dedicated tool.
(3) Insert the terminal into holes at both ends of the socket.
(Note) Check the orientation for insertion.
(4) Insert the socket into the solenoid valve connector section.

* For details of crimp terminals and crimping tools, contact CKD.

Note: Use caution with polarity of ⊕ ⊖.
Incorrect polarity will not result in a short-circuit, but the valve will not operate.

Safety Precautions

Be sure to read this section before use.
For general valve precautions, refer to Intro Page 59.

Product-specific cautions: Direct acting 3-port valve 3QE / 3QB / 3QRA/B Series

Design/selection

1. Common

⚠WARNING

■ Do not use this as a solenoid valve for emergency cutoff. If left pressurized for long periods, the starting response could be delayed.

■ The solenoid valve air leakage is greater than zero, so long-term pressure retention is not possible. For applications requiring pressure retention, design sufficient margins for container volume and holding time.

■ A mesh filter is built in the 2(A) port as standard to prevent foreign matter from being suctioned into the pipe, but it cannot remove fine dust particles. When using this in vacuum conditions, install a vacuum filter between the pad nozzle and the valve. (3QR Series)

■ Note the items below when mounting solenoid valves on non-CKD bases.

· Solenoid valve mounting pitch is 10.5 mm and over.
· Base material is aluminum.

As applications other than the above require consideration for heat dissipation, consult with CKD.

2. Surge suppressor

⚠CAUTION

■ The surge suppressor included with the solenoid valve aims to protect the output contact for driving the solenoid valve. There is no significant protection for the other peripheral devices, and devices could be damaged or could malfunction due to a surge. As well, surges generated by other devices may be absorbed and cause damage such as burning. Note the following points.

● The surge suppressor functions to limit voltage surge in the solenoid valve, which can reach several hundred volts, to a low voltage level that the output contact can withstand. Depending on the output circuit used, this may be insufficient and could result in damage or malfunction. Check whether the surge suppressor can be used within the surge voltage limit of the solenoid valve in use, the output device's withstand pressure and circuit structure, and by the degree of return delay time. When necessary, provide other surge countermeasures. The 3Q Series solenoid valve with surge suppressor can also suppress the inverse voltage surge generated when the product is turned OFF to the level shown in the table below.

Model	Specification voltage	Inverse voltage when OFF
3QE, 3QR	3 VDC	Approx. 6.2 V
	5 VDC	Approx. 13 V
	12 VDC	Approx. 27 V
	24 VDC	Approx. 47 V
	When options "S", "E" or "H" are selected	Approx. 1 V
3QB	12, 24 VDC	Approx. 1 V

● If the output unit is an NPN type, a surge voltage equaling the voltage shown in the table above plus the power supply voltage may be applied to the output transistor. Make sure to install a contact protection circuit or select option "S".

[Output transistor protection circuit: Installation example 1]

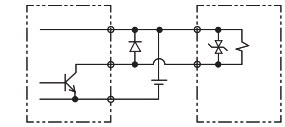

[Output transistor protection circuit: Installation example 2]

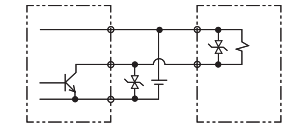

(3) If another device or solenoid valve is connected in parallel to the solenoid valves, the inverse voltage surge generated when the valve is turned OFF would apply to those devices. Even in the case of a solenoid valve with 24 VDC surge suppressor, the surge voltage may reach negative tens of volts for some models. This inverse voltage may cause damage or malfunction to other components connected in parallel. Avoid parallel connection of devices susceptible to inverse polarity voltages, e.g. LED indicator lamps.
When driving several solenoid valves in parallel, the surge from other solenoid valves may enter the surge suppressor of one solenoid valve, and it may burn depending on the current value.
When driving several solenoid valves with surge suppressors in parallel, surge current could concentrate at the surge suppressor with the lowest limit voltage and cause similar burning. Due to the variations in surge suppressor limit voltage that exist even among solenoid valves of the same model No., in the worst case the surge suppressor may burn out. Avoid driving several solenoid valves in parallel.

(4) The surge suppressor incorporated in the solenoid valve is likely to be short-circuited if it is damaged by overvoltage or overcurrent from other solenoid valves. Where there is a failed surge suppressor, if a large current flows when the output is ON, in the worst case scenario, the output circuit or solenoid valve could be damaged or ignited. Do not continue energizing in a state of failure. Additionally, to prevent large currents from continuing to flow, connect an overcurrent protection circuit to the power supply and drive circuit, or use a power supply with overcurrent protection.

3. Surgeless (3QE Series only)

· The surgeless type reduces the solenoid valve surge voltage to approx. 1 V with the built-in diode. In addition, there is no polarity.

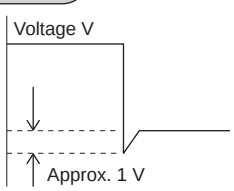

4. Low exoergic/energy circuit (3QE Series only)

· The low exoergic/energy saving type includes a PWM circuit in the solenoid valve, which is designed to reduce the current value when the coil is held with suction. Power consumption is reduced to 1/4 compared to standard products. In addition, there is no polarity.

[Specifications for low exoergic/energy type]

Item		Current A	Power consumption W
When starting	12 VDC	0.033	0.4
	24 VDC	0.017	0.4
When holding	12 VDC	0.01	0.1
	24 VDC	0.005	0.1

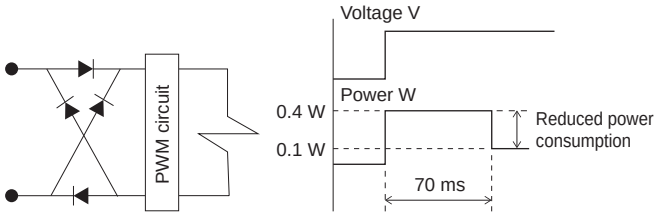

⚠CAUTION

■ Do not use this valve in an environment where vibration and impact exceed the specified range. This may result in valve malfunction.

■ The energized state cannot be maintained if power is cut off instantaneously for 30 ms or less on the power source driving the solenoid valve. If any disturbance has caused up to 30 ms instantaneous power cut-off of the solenoid valve after being continuously energized, cut the power OFF for 50 ms or more before switching the solenoid valve ON again.

■ Do not use this product by gradually raising the voltage. The valve will not operate.

5. AC voltage specifications (3QE Series only)

⚠CAUTION

■ The models with AC voltage specifications have a built-in full-wave rectifier circuit.
Depending on the type of SSR used to turn ON/OFF the solenoid valve, recovery failure of the valve may result.
Use caution when selecting SSRs. (Consulting the manufacturer of the relay or PLC is recommended.)

6. Large flow rate (3QRA/B Series only)

⚠CAUTION

· Never use in environments where the vibration or impact applied exceeds the specifications.This may result in valve malfunction.
The large flow rate includes a current control circuit, which is designed to reduce the current value when the coil is held with suction. Only plus common polarity is used.

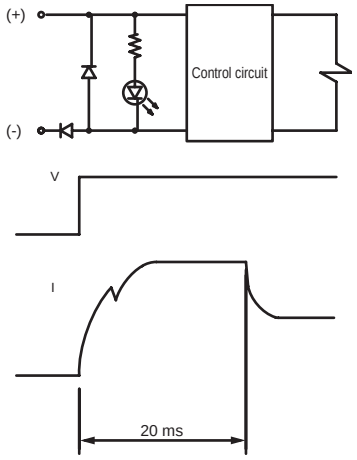

7. Vacuum specifications

⚠CAUTION

Select 3QB or 3QR Series when using the unit with vacuum. 3QE Series cannot be used under vacuum conditions, including vacuum burst applications.

Use/maintenance

1. Common

⚠CAUTION

■ The coil may become hot due to ambient temperature or energizing time. Be sufficiently careful when touching the valve.

■ Use appropriate torque to tighten the pipes when connecting them.

· The purpose is to prevent air leakage and damage to screws. First tighten the bolts by hand to ensure that the threads are not damaged, then use a tool.

Port thread	Tightening torque N·m
M5	1.0 to 1.5
Rc1/8	3 to 5

■ Tighten the solenoid valve with an appropriate torque when mounting.

· Excessive tightening may lead to damage.
· Use a #0 screwdriver.

Model No.	Tightening torque N·m
3QRA/B	0.12 ±0.02
3QE/3QB	0.15 ±0.02

2. Continuous energizing

⚠CAUTION

■ When using in a continuously energized state for long periods, use the low exoergic/energy type. (3QE Series)

■ When using the AC voltage type in a continuously energized state, the temperature of the coil's outer surface will be high. It may cause burns. Do not touch it when it is energized. (3QE Series)

■ Long energized time causes performance deterioration of the solenoid valve.
Note the following points for the standard flow rate in particular. (3QRA/B Series)

· The energized time should be no longer than the de-energized time for intermittent energizing.
· One energizing cycle should be 5 minutes or less.
· Set so that the temperature around the solenoid valve does not exceed the max. working temperature.

■ If a valve other than the low exoergic/energy type is used in a continuously energized state for long periods, the valve performance may deteriorate more quickly.
Furthermore, use caution under the following working conditions likewise.

● When the energized time exceeds non-energized time in intermittent operation
● When one energizing session exceeds 30 minutes in intermittent operation

Give sufficient consideration to heat dissipation when installing the product.

3. Manual override

⚠CAUTION

■ 3QE Series

· How to operate manual override of non-locking
Push the manual button vertically with a thin-tipped tool.
· Locking manual override
Rotate the manual button in the direction of the arrow using a flathead screwdriver.
After completing manual operation, rotate the manual button to return it to its original position.

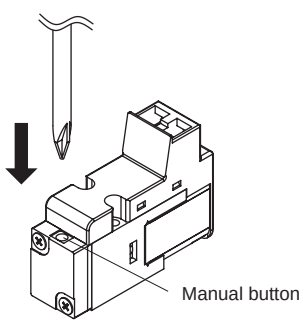

Non-locking manual override　　Locking manual override

Precautions
Do not operate with excessive force. The solenoid valve could be damaged.
Forgetting to reset the locking manual override may lead to malfunction. Be sure to release the manual override after completing operation.

■ 3QRA/3QRB Series
[2-position single (self-reset)]
Pressing the manual override can switch the main valve to the solenoid position when energized.
Press the manual override from the front, using a thin-tipped tool such as a precision screwdriver.
Pushing diagonally at this point may result in incomplete position switching and cause internal leakage.
To obtain normal operation, detach the tool and press it again from the front.

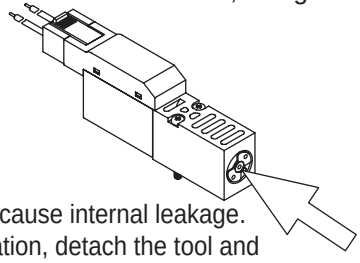

[2-position single (self-hold)]
The flow path can be switched by pressing (1) and (2) on the manual override. ((1): 1→2, (2): 2→3)
Press the manual override from the front, using a thin-tipped tool such as a precision screwdriver.

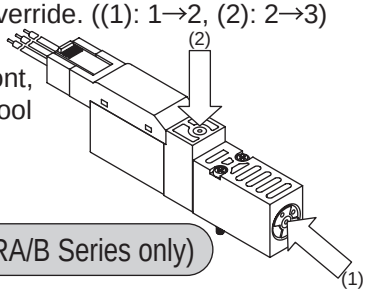

4. Self-hold type (3QRA/B Series only)

⚠CAUTION

● Precautions when energizing

· Limit continuous energizing to within 30 seconds.
· Limit energization ratio to 50% or less.
· Min. time of excitation should be 50 ms or longer.
· Do not energize black and white lead wires simultaneously. Solenoid valves will not operate if they are simultaneously energized. The state before energizing will be maintained (display lamps on both sides light). Note that the valve will be activated from that state if both sides are not turned OFF simultaneously.

● Malfunction may occur if a magnet comes close to the solenoid valve.
Install at least 10 cm away from magnets.

● The holding position may change during installation and transport due to impact exceeding the specifications.
Before use, verify the position manually or electrically.

How to fill out M3QE/Z1 manifold specifications sheet

● Manifold model No.

M3QE/Ⓩ1 [8] 0 - M5 - [ ] [E2] [A] - [8] - [3]

Piping | *1 | Port size | Manual override | Electrical connections | Option | Station No. | Voltage

*1: Mixing of the points specified above is not possible. Specify by model No.

Part name	Model No.	Layout position																				Quantity
		1	2	3	4	5	6	7	8	9	10	11	12	13	14	15	16	17	18	19	20	
Valve	3QE119-□	OK	OK	OK		OK	OK	OK														6
Masking plate	3QE1-MP				OK				OK													2

Preparing manifold specifications sheet

● Complete from the left end, with the piping port facing forward.

● Select and fill out the appropriate form from the manifold specifications sheet for each model.

M3QE/Z1 Manifold specifications sheet

Date issued / /

Company

Contact

Order No.

● Contact ● Quantity set(s) ● Delivery date

Slip No.	Order No.

● Manifold model No.

M3Q [E/Z] 1 [ ] 0 - M5 - [ ] [ ] [ ] - [ ] - [ ]

*1 | Port size | Manual override | Electrical connections | Option | Station No. | Voltage

*1: Mixing of the points specified above is not possible. Specify by model No.

Part name	Model No.	Layout position																				Quantity
		1	2	3	4	5	6	7	8	9	10	11	12	13	14	15	16	17	18	19	20	
Valve	3QE119-□																					
Masking plate	3QE1-MP																					

How to fill out M3QB1 manifold specifications sheet

● Manifold model No.

M3QB 1 [8] 0 - M5 - [C2] H [P] - [8] - [3]

*1 | Port size | Connection | Option | Station No. | Voltage

*1: Mixing of the points specified above is not possible. Specify by model No.

Part name	Model No.	Layout position																				Quantity
		1	2	3	4	5	6	7	8	9	10	11	12	13	14	15	16	17	18	19	20	
Valve	3QB119- □	OK	OK	OK		OK	OK	OK														6
Masking plate	3QB1-MP- □				OK				OK													2

Preparing manifold specifications sheet

● Complete from the left end, with the piping port facing forward.
● Select and fill out the appropriate form from the manifold specifications sheet for each model.

M3QB1 Manifold specifications sheet

Date issued / /
Company
Contact
Order No.

● Contact ● Quantity set(s) ● Delivery date

Slip No.	Order No.

● Manifold model No.

M3QB 1 [ ] 0 - M5 - [ ] H [ ] - [ ] - [ ]

*1 | Port size | Connection | Option | Station No. | Voltage

*1: Mixing of the points specified above is not possible. Specify by model No.

Part name	Model No.	Layout position																				Quantity
		1	2	3	4	5	6	7	8	9	10	11	12	13	14	15	16	17	18	19	20	
Valve	3QB119- □																					
Masking plate	3QB1-MP- □																					

How to fill out M3QRA/B1 manifold specifications sheet

● Manifold model No.

M3QRA/Ⓑ1 [8] 0 - M5 - [C2] [H] - [8] - [3]

Piping | *1 | Port size | Electrical connections | Option | Station No. | Voltage

*1: Mixing of the points specified above is not possible. Specify by model No.

Part name	Model No.	Layout position																				Quantity
		1	2	3	4	5	6	7	8	9	10	11	12	13	14	15	16	17	18	19	20	
Valve	3QRA119-□																					
	3QRB119-□	OK	OK	OK		OK	OK	OK														6
	3QRA129-□																					
	3QRB129-□																					
Masking plate	3QR1-MP				OK				OK													2

Preparing manifold specifications sheet

● Complete from the left end, with the piping port facing forward.

● Select and fill out the appropriate form from the manifold specifications sheet for each model.

M3QRA/B1 Manifold specifications sheet

Date issued / /

Company

Contact

Order No.

● Contact ● Quantity set(s) ● Delivery date

Slip No.	Order No.

● Manifold model No.

M3QR [A/B] 1 [ ] 0 - M5 - [ ] [ ] - [ ] - [ ]

*1 | Port size | Electrical connections | Option | Station No. | Voltage

*1: Mixing of the points specified above is not possible. Specify by model No.

Part name	Model No.	Layout position																				Quantity
		1	2	3	4	5	6	7	8	9	10	11	12	13	14	15	16	17	18	19	20	
Valve	3QRA119-□																					
	3QRB119-□																					
	3QRA129-□																					
	3QRB129-□																					
Masking plate	3QR1-MP																					

MV3QR

3QR negative pressure switching unit

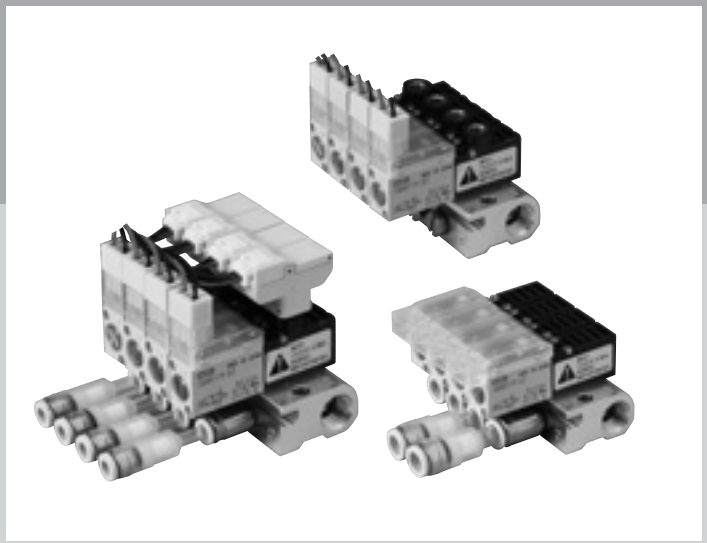

CONTENTS

Product introduction	1574
● Body piping (MV3QRA)	1576
● Sub-plate piping (MV3QRB)	1576
Technical data	
(1) Connector connection	1586
Manifold specifications sheet	1589
⚠ Safety precautions	1587

Vacuum suction unit with emphasis on functions

Fast and stable suction transport without positive pressure source

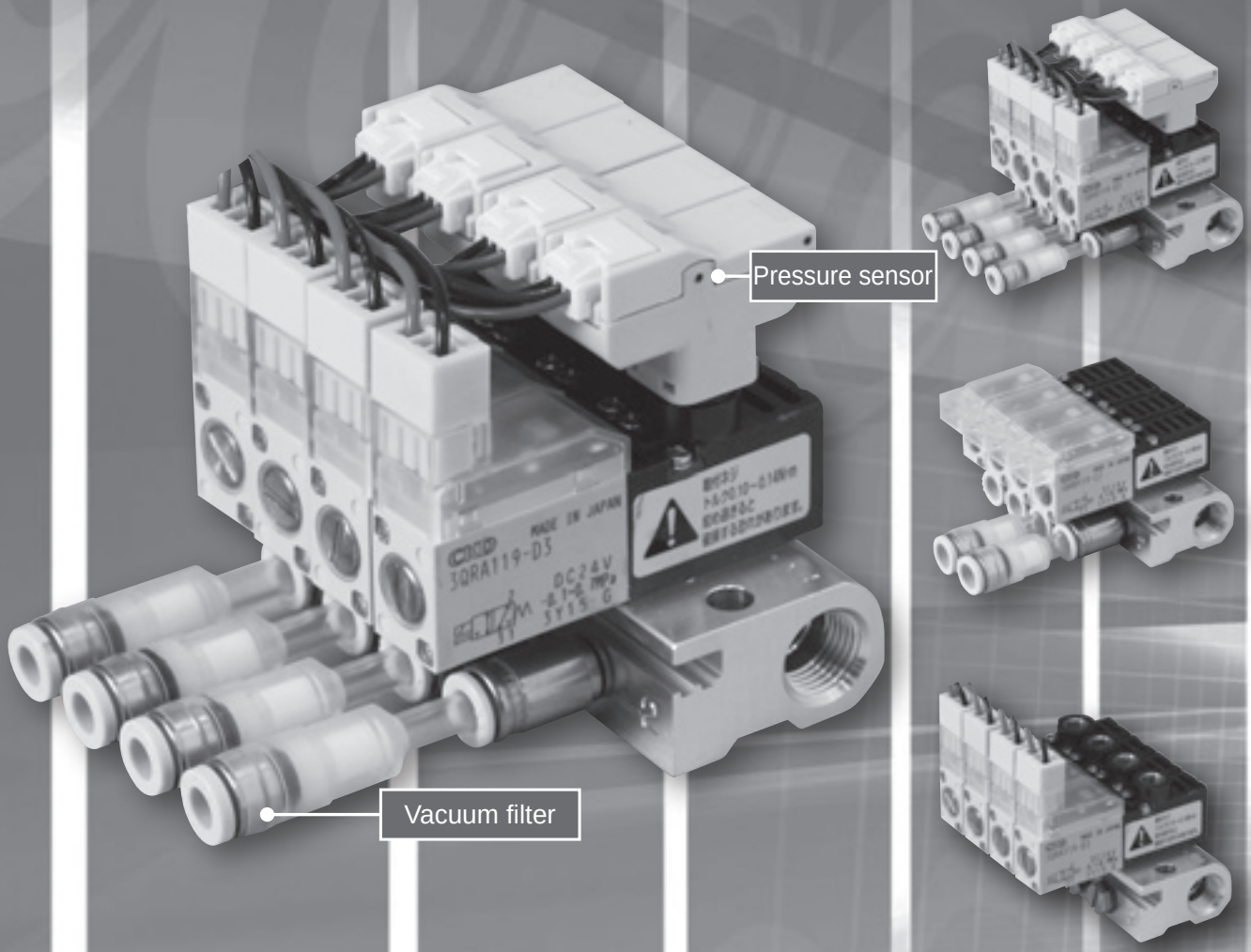

MV3QRA1 MV3QRB1 Series

3QR negative pressure switching unit

Ideal for suction transport of small articles!

Vacuum release without positive pressure
to prevent small chips from being blown away.

Electrical response and pressure waveform

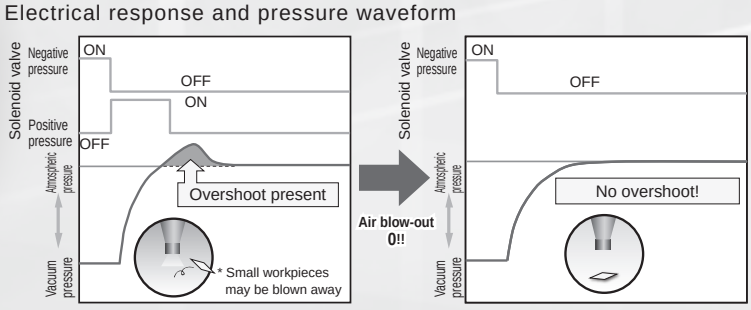

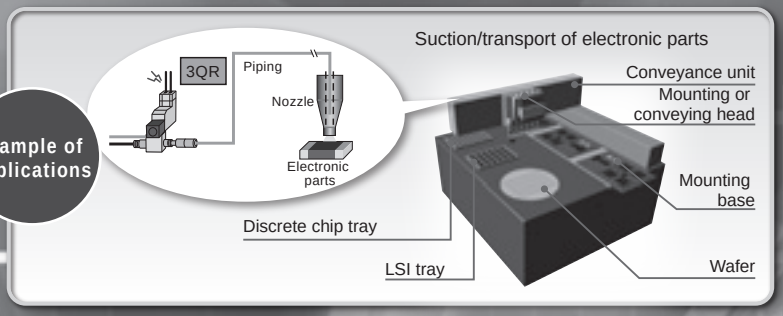

1 Vacuum burst valve not required

- Vacuum release without positive pressure to prevent small chips from being blown away. No further countermeasure required
- No need for burdensome adjustment of burst pressure, flow rate and timing
- Slimmer with no vacuum burst valve

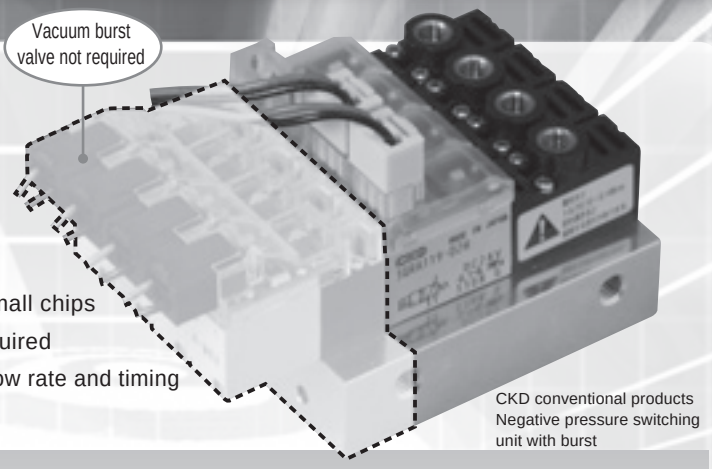

Speeds up the vacuum release in returning to positive pressure and shortens suction time with the use of solenoid valve with large flow rate

Response time Diagram

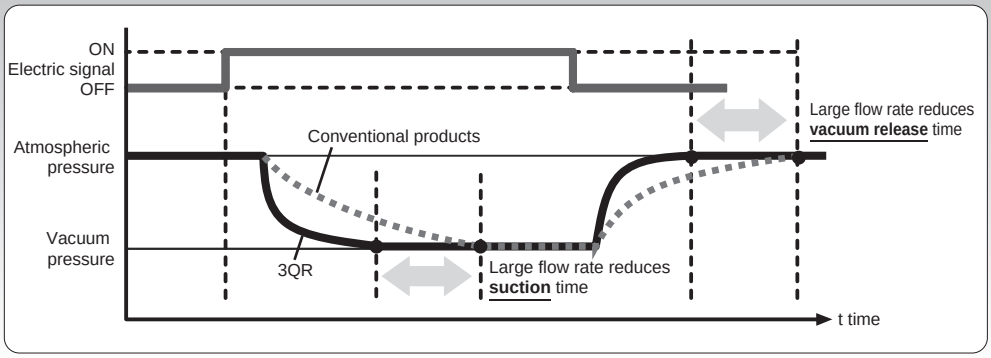

2 Footprint minimized

- The footprint has been reduced by 44% and weight by 53% as compared with CKD's conventional unit with burst. Ideal for downsizing manufacturing equipment
- Allows installation in tight space, increasing the flexibility in design
- Lighter weight makes it easier to be installed on a movable portion of equipment

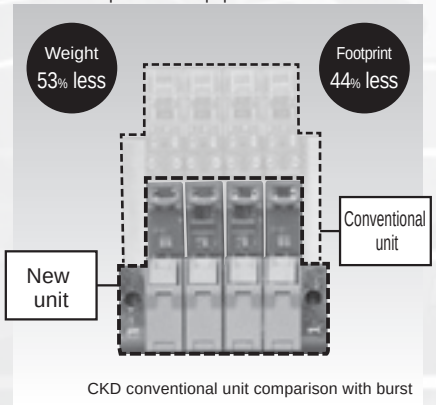

CKD conventional unit comparison with burst

3 Pressure sensor can be equipped

- Downsizing made possible by integrating the vacuum pressure sensor.
- Capable of detecting negative pressure without taking up space
- The pressure sensor is tightened by clips, improving maintainability

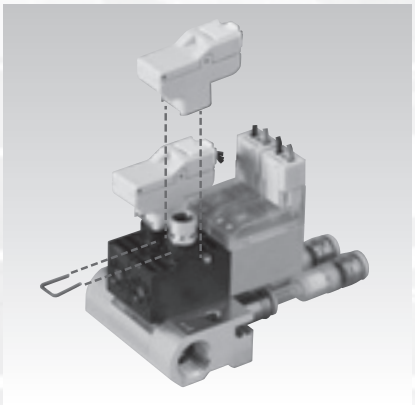

4 Vacuum filter can be equipped

- No need to install filters in the middle of the piping
- The vacuum filter can be replaced in one step, improving maintainability

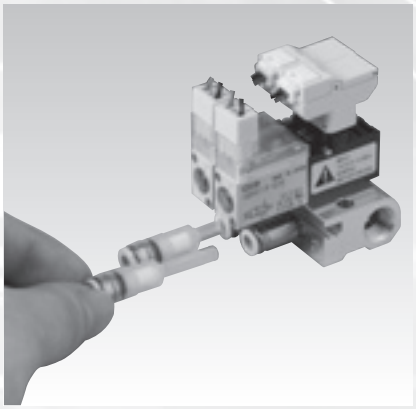

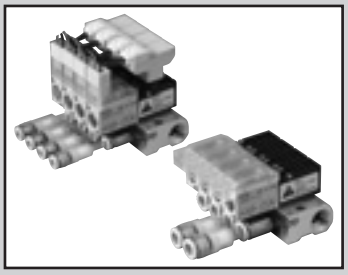

3QR negative pressure switching unit

MV3QRA/MV3QRB Series

● Self-reset, self-hold

RoHS CAD

JIS symbol

● 2-position universal

(Self-reset)

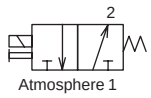

(Self-hold)

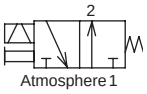

Unit common specifications

1 MPa = 10 bar

Item	3QR negative pressure switching unit	
	With sensor MV3QR	Without sensor MV3QR*-V1
Manifold station No.	2 to 10 stations	
Working fluid	Low vacuum	
Max. working pressure MPa	0 (≈0 psi, 0 bar)	
Min. working pressure kPa	Low vacuum: -100 (≈-15 psi, -1 bar)	
Proof pressure MPa	1.05 (≈150 psi) (low vacuum: -101 kPa (≈-15 psi))	0.5 (≈73 psi) (low vacuum: -101 kPa (≈-15 psi))
Ambient temperature °C	-5 (23°F) to 50 (122°F) (no freezing)	0 (32°F) to 50 (122°F) (no freezing)
Fluid temperature °C	5 (41°F) to 50 (122°F)	
Vibration/shock resistance m/s²	50 or less/300 or less	
Atmosphere	Cannot be used in corrosive gas environments	

Solenoid valve specifications

1 MPa = 10 bar

Item	Description
Valve and operation	Direct acting poppet valve
Proof pressure MPa	1.05 (≈150 psi) (low vacuum: -101 kPa (≈-15 psi))
Min. working pressure kPa	-100 (≈-15 psi, -1 bar)
Lubrication	Unavailable *1
Degree of protection	Dust-proof

*1: Lubrication will degrade the performance.

Electrical specifications

Item		Standard specs	Large flow rate specs H
Rated voltage V	DC	24/12	
Energizing rate		Intermittent (*1)	Continuous
Voltage fluctuation range		±10%	
Starting curren A	24 VDC	-	0.13
	12 VDC	-	0.27
Holding current A	24 VDC	0.08	0.10
	12 VDC	0.17	0.20
Power consumption W		2.0	2.4 *2
Thermal class		B	

*1: Limit energizing within 5 minutes and energization ratio to 50% or less. Min. time of excitation for self-holding is 50 ms.

*2: 3.2 W for 20 ms after start.

Response time

Model No.		Response time (*2) [ms]	
		ON	OFF
MV3QRA11 MV3QRB11	Self-reset	4±1	1.5±1
MV3QRA12 MV3QRB12	Self-hold	5 or less	5 or less

*2: Response time is the value for continuous operation under the condition of 0.5 MPa supply pressure at 20°C.

Flow characteristics

Model No.	Option	Port 2→1		Atmosphere→2	
		C[dm³/(s·bar)]	S (reference value) [mm²]	C[dm³/(s·bar)]	S (reference value) [mm²]
MV3QRA1	Blank	0.32	1.6	0.30	1.5
	H	0.38	1.9	0.36	1.8
MV3QRB1 MV3QRA1*-V1	Blank	0.34	1.7	0.34	1.7
	H	0.40	2.0	0.40	2.0

Connection circuit diagram

Voltage	Solenoid position	Option	Wiring circuit	Connection
DC	2-position single (Self-reset)	-		Grommet lead wire (blank) No polarity
		With surge suppressor and indicator lamp	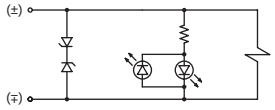	C-connector (C2*/C3) D-connector (D2*/D3) No polarity
		Large flow rate with surge suppressor and indicator lamp	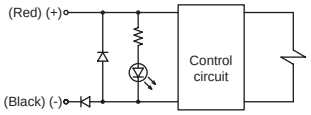	C-connector (C2*/C3) D-connector (D2*/D3) Polarized
	2-position single (Self-hold)	With surge suppressor and indicator lamp	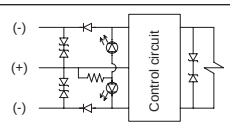	C-connector (C2*/C3) D-connector (D2*/D3) Polarized

Pressure sensor specification

Item		Analog sensor V1
Service voltage		10.8 to 30 VDC
Current consumption		20 mA or less (24 VDC, no load)
Pressure detection method		Diffused semiconductor pressure switch
Ambient temperature		0 to 50°C
Working pressure		-100kPa (≈-15 psi, -1 bar) to 0kPa (≈0 psi, 0 bar)
Proof pressure		500kPa (≈73 psi, 5 bar)
Degree of protection		Dust-proof
Analog output	Output voltage	1 to 5 V
	Zero point voltage	1±0.1 V
	Linearity	±0.5% F.S. max
	Temp characteristics	±2% F.S. max
	Output current	1 mA max (load resistance 5 kΩ and over)
Connection		Connector
Wire length		1000 mm

Wiring method for pressure sensor

● Lead wire color and content

Line color	Description
Brown	Power supply (10.8 to 30 VDC)
Black	Analog output (1 to 5 V)
Blue	GND(0 V)

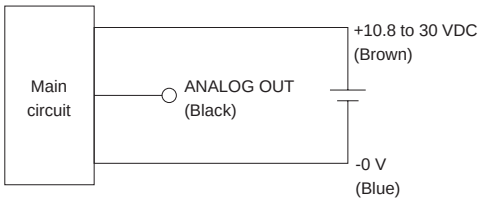

Analog output voltage - pressure characteristics

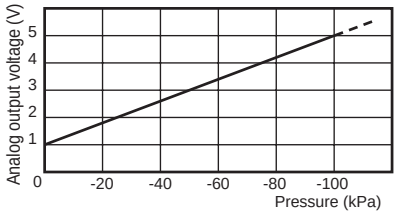

Weight

Discrete valve

Description	Weight (g)
Self-reset (single solenoid valve)	19
Self-hold (single solenoid valve)	23

Sensor

Description	Weight (g)
Sensor for MV3QR	4.5

Push-in fitting

Model No.	Description	Weight (g)
GWS4-M5-S	ø4 push-in fitting	3
GWS6-M5-S	ø6 push-in fitting	4

Manifold base

	2 stations	3 stations	4 stations	5 stations	6 stations	7 stations	8 stations	9 stations	10 stations
Weight g	26	34	42	50	58	66	74	82	90

Vacuum filter (attachment)

Model No.	Description	Weight (g)
VSFJ-44	ø4 vacuum filter	1.5
VSFJ-66	ø6 vacuum filter	2.5

■ Weight calculation of negative pressure switching unit

(Discrete valve unit weight + sensor weight + push-in fitting weight + vacuum filter weight) x Station No. + manifold base

Example) When attaching self-reset, quadruple manifold with pressure sensor, ø4 fitting screw or ø4 vacuum filter afterwards

(19+4.5+3+1.5)x4+50=162 g

How to order

● Manifold model No.

MV3QRA1 1 0 - M5 - C2 H - 10 - 3 - V1

● Discrete valve for integrated base

3QRA1 1 9 - M5 — C2 H —— 3

3QRB1 1 9 - 00 — C2 H —— 3

Ⓐ Model No.
Ⓑ Solenoid position
Ⓒ Port size
Ⓓ Solenoid valve electric wire system
Ⓔ Flow rate size
Ⓕ Station No.
Ⓖ Solenoid valve voltage
Ⓗ Pressure sensor

Code	Description	Ⓐ Model No. Manifold for negative pressure: Body piping MV3QRA1	Sub-plate piping MV3QRB1
Ⓑ Solenoid position			
1	2-position single (self-reset)	●	●
2	2-position single (self-hold) *1	●	●
8	Mix manifold *2	●	●
Ⓒ Port size			
M5	M5	●	●
GS4	ø4 push-in fitting	●	●
GS6	ø6 push-in fitting	●	●
GS4F	ø4 push-in fitting (vacuum filter attached)	●	●
GS6F	ø6 push-in fitting (vacuum filter attached)	●	●
Ⓓ Solenoid valve electric wire system			
Blank	Grommet lead wire (300 mm) *3	●	●
C2	C-connector (300 mm) with surge suppressor/indicator lamp	●	●
C20	C-connector (500 mm) with surge suppressor/indicator lamp	●	●
C21	C-connector (1000 mm) with surge suppressor/indicator lamp	●	●
C22	C-connector (2000 mm) with surge suppressor/indicator lamp	●	●
C3	C-connector (no lead) with surge suppressor/indicator lamp	●	●
D2	D-connector (300 mm) with surge suppressor/indicator lamp	●	●
D20	D-connector (500 mm) with surge suppressor/indicator lamp	●	●
D21	D-connector (1000 mm) with surge suppressor/indicator lamp	●	●
D22	D-connector (2000 mm) with surge suppressor/indicator lamp	●	●
D3	D-connector (no lead) with surge suppressor/indicator lamp	●	●
Ⓔ Flow rate size			
Blank	Standard	●	●
H	Large flow rate	●	●
Ⓕ Station No.			
2 to 10	2 stations to 10 stations	●	●
Ⓖ Solenoid valve voltage			
3	24 VDC	●	●
4	12 VDC	●	●
Ⓗ Pressure sensor			
Blank	None	●	●
V1	Analog negative pressure sensor equipped	●	

Precautions for model No. selection

*1: For "2", 2-position single solenoid (self-hold) for Ⓑ Solenoid position, "H" for Ⓔ Flow rate and "4" for Ⓖ Voltage are not selectable.
*2: Combination with a masking plate.
Combination of A and B types is not available.
Solenoid positions "1" and "2" cannot be mixed.
*3: For connection with the grommet lead wire (300 mm), "2", 2-position single solenoid (self-hold) for Ⓑ Solenoid position, and "H", large flow rate for Ⓔ Flow rate are not selectable.

[Example of model No.]

MV3QRA110-GS4-C2-7-3-V1

Ⓐ Model : MV3QRA1 (Body piping)
Ⓑ Solenoid position : 2-position single
Ⓒ Port size : ø4 push-in fitting
Ⓓ Solenoid valve electric wire system : Lead wire 300 mm
With surge suppressor and indicator lamp
Ⓔ Flow rate size : Standard 2 W
Ⓕ Station No. : 7 stations
Ⓖ Solenoid valve voltage : 24 VDC
Ⓗ Pressure sensor : Analog negative pressure sensor equipped

How to order masking plate kit

3QR1 - MP - KIT

* Gasket/mounting screw attached

Solenoid valve connection method

● 3QRA11/3QRB11

Blank	C2	C3	D2	D3
Grommet lead wire	C-connector with lead wire With surge suppressor/display lamp	C-connector, without lead wire, with surge suppressor/indicator lamp	D-connector with lead wire With surge suppressor/display lamp	D-connector, without lead wire, with surge suppressor/indicator lamp
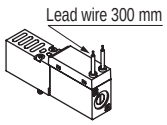	· Lead wire length C2 : 300 mm C20: 500 mm C21: 1000 mm C22: 2000 mm 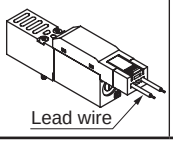	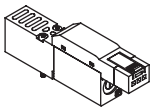	· Lead wire length D2 : 300 mm D20: 500 mm D21: 1000 mm D22: 2000 mm 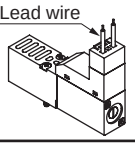	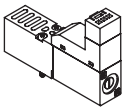

● 3QRA12/3QRB12

C2	C3	D2	D3
C-connector with lead wire With surge suppressor/display lamp	C-connector, without lead wire, with surge suppressor/indicator lamp	D-connector with lead wire With surge suppressor/display lamp	D-connector, without lead wire, with surge suppressor/indicator lamp
· Lead wire length C2 : 300 mm C20: 500 mm C21: 1000 mm C22: 2000 mm 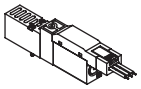	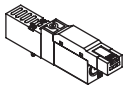	· Lead wire length D2 : 300 mm D20: 500 mm D21: 1000 mm D22: 2000 mm 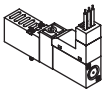	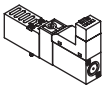

Ozone-proof specifications

Conforms to low-concentration ozone specifications as standard.

Specifications for rechargeable battery

Conforms to CKD P4 Series equivalent specifications as standard.

Dimensions (MV3QRA110-M5)

· 2-position single (self-reset): grommet lead wire

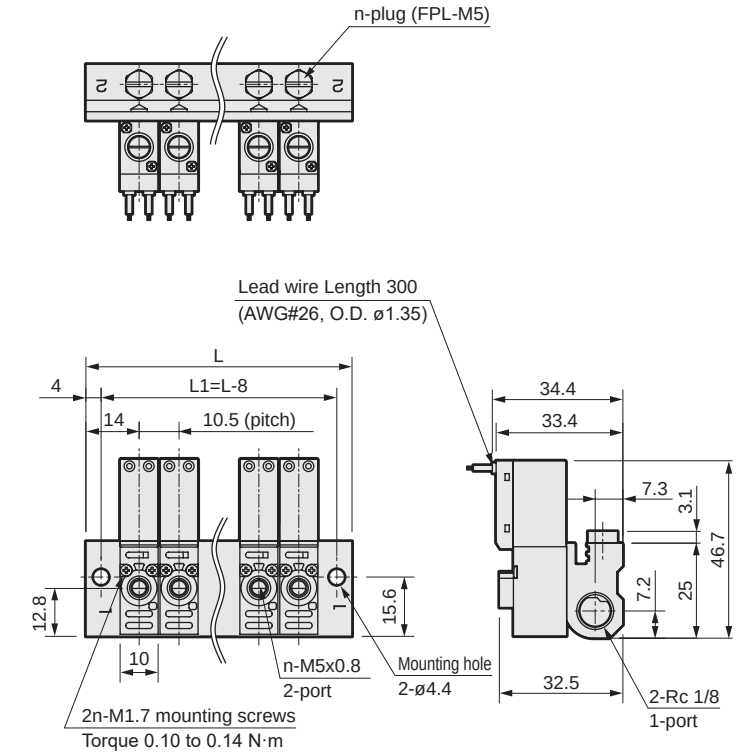

· C-connector (C2/C2*/C3)

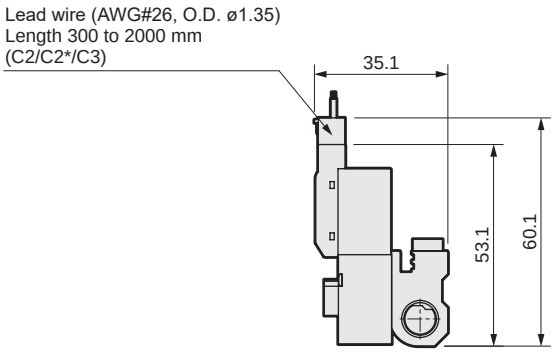

· D-connector (D2/D2*/D3)

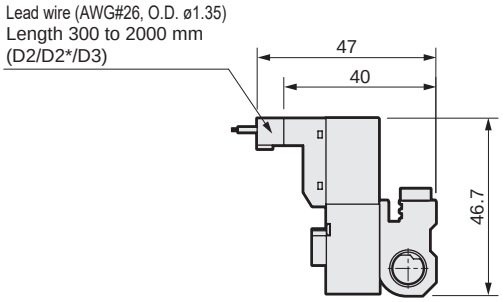

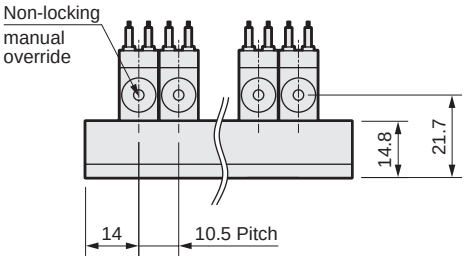

· ø4 push-in fitting (GS4/GS4F)

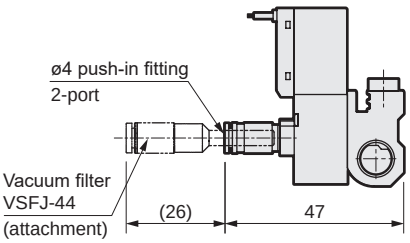

· ø6 push-in fitting (GS6/GS6F)

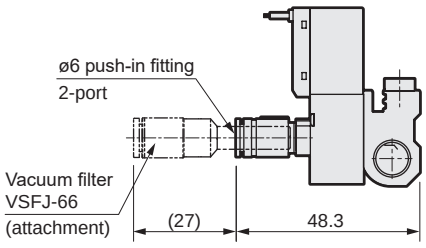

Station No.	2	3	4	5	6	7	8	9	10
L	38.5	49.0	59.5	70.0	80.5	91.0	101.5	112.0	122.5
L1	30.5	41.0	51.5	62.0	72.5	83.0	93.5	104.0	114.5

Dimensions (MV3QRA120-M5)

· 2-position single (self-hold): C-connector (C2/C2*/C3)

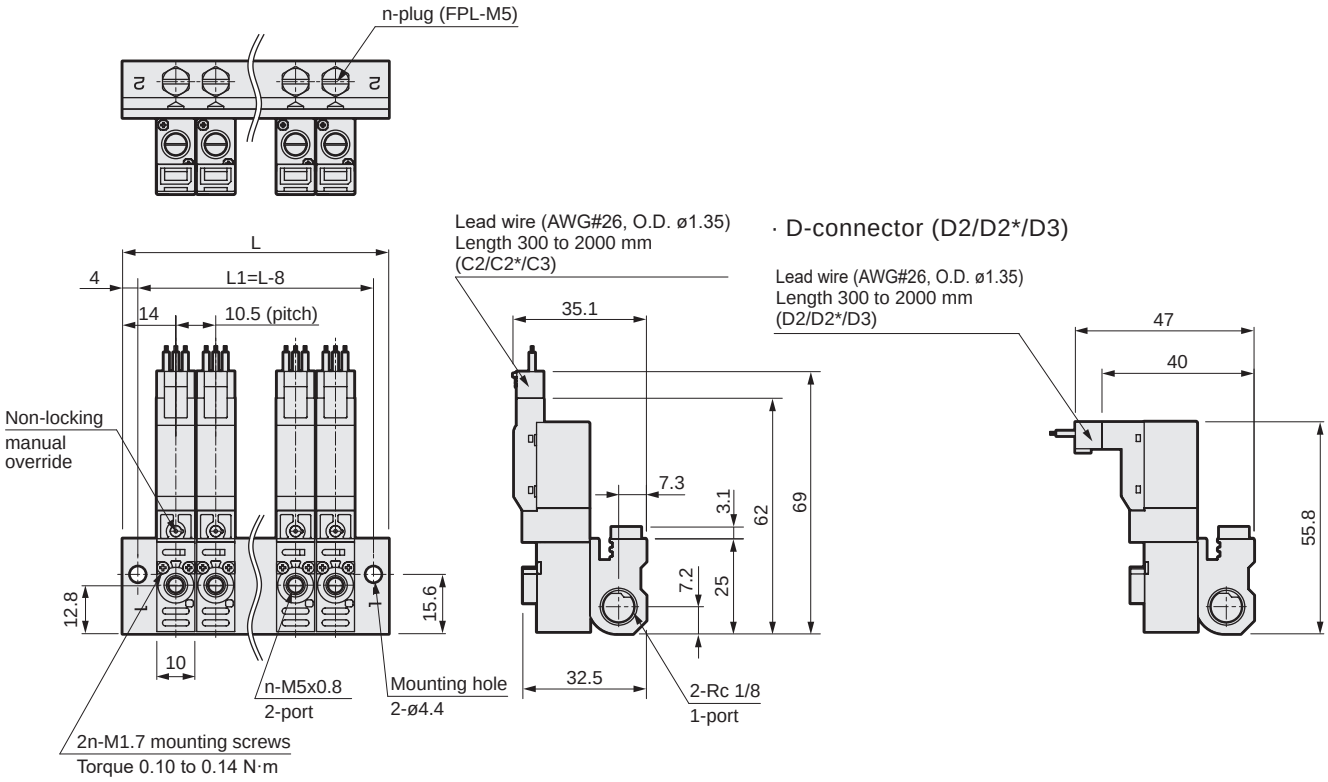

· D-connector (D2/D2*/D3)

· ø4 push-in fitting (GS4/GS4F)

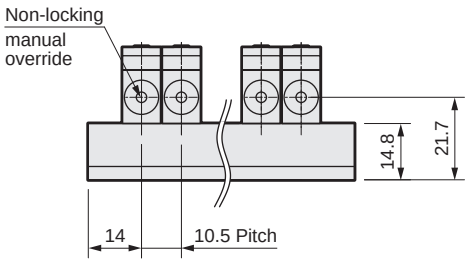

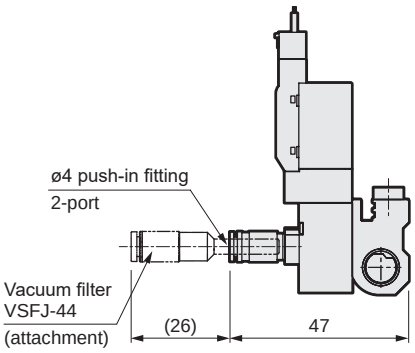

· ø6 push-in fitting (GS6/GS6F)

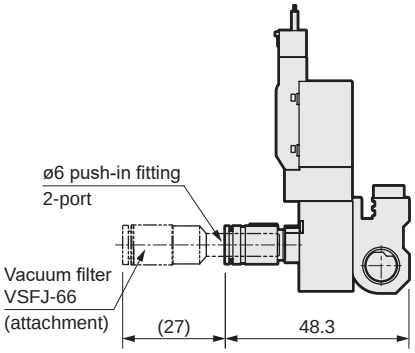

Station No.	2	3	4	5	6	7	8	9	10
L	38.5	49.0	59.5	70.0	80.5	91.0	101.5	112.0	122.5
L1	30.5	41.0	51.5	62.0	72.5	83.0	93.5	104.0	114.5

Dimensions (MV3QRB110-M5)

·2-position single (self-reset): grommet lead wire

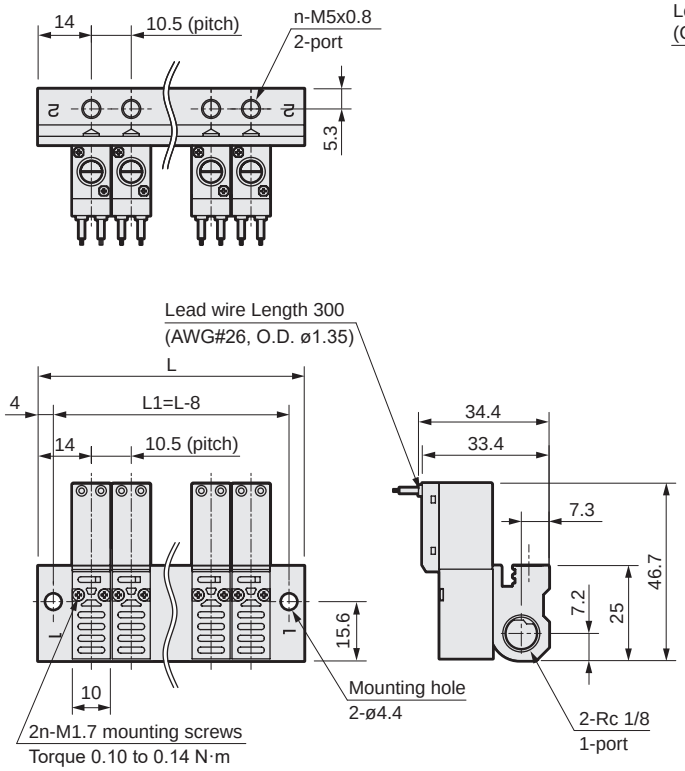

·C-connector (C2/C2*/C3)

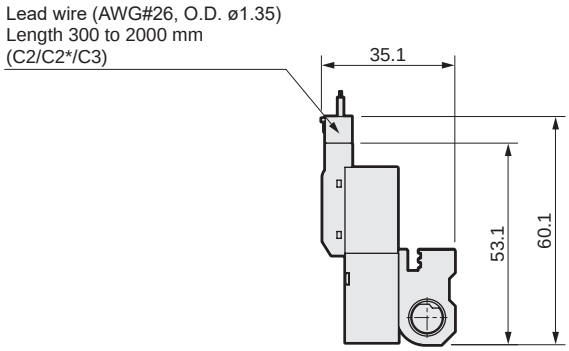

· D-connector (D2/D2*/D3)

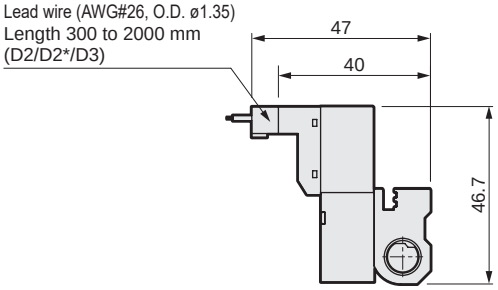

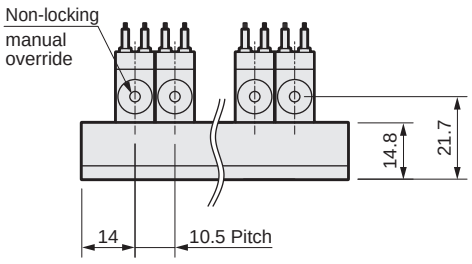

· ø4 push-in fitting (GS4/GS4F)

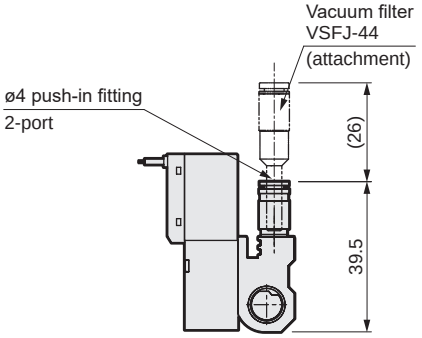

· ø6 push-in fitting (GS6/GS6F)

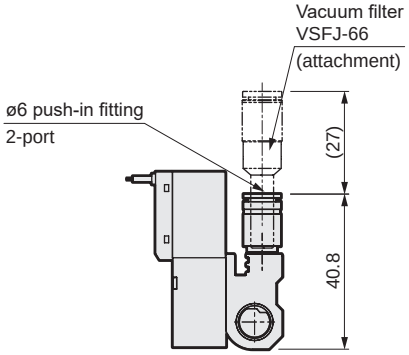

Station No.	2	3	4	5	6	7	8	9	10
L	38.5	49.0	59.5	70.0	80.5	91.0	101.5	112.0	122.5
L1	30.5	41.0	51.5	62.0	72.5	83.0	93.5	104.0	114.5

Dimensions (MV3QRB120-M5)

· 2-position single (self-hold): C-connector (C2/C2*/C3)

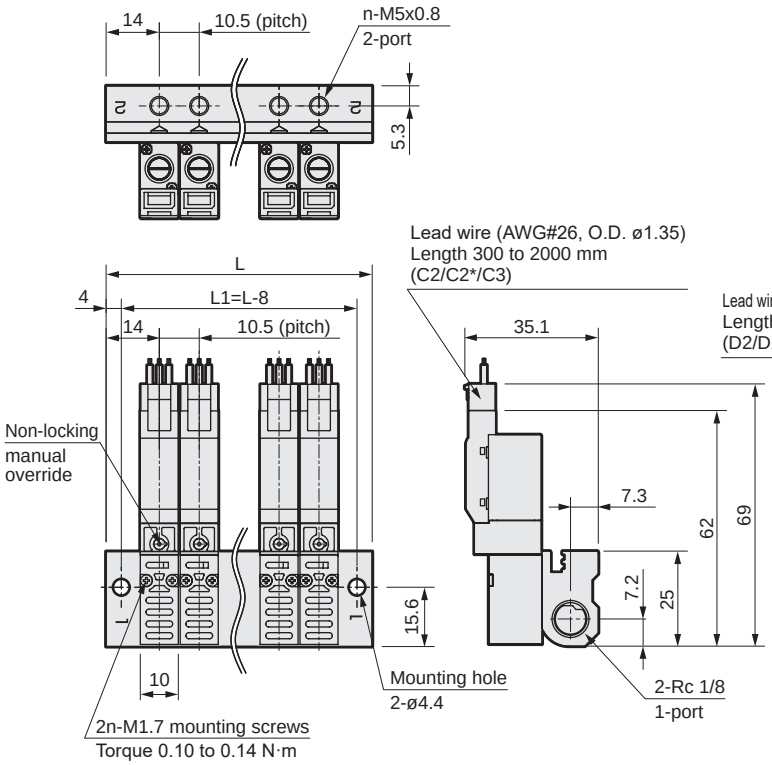

· D-connector (D2/D2*/D3)

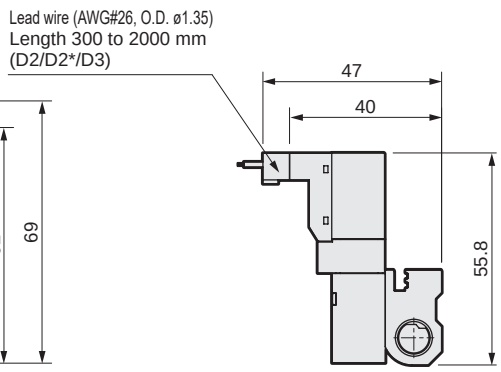

· ø4 push-in fitting (GS4/GS4F)

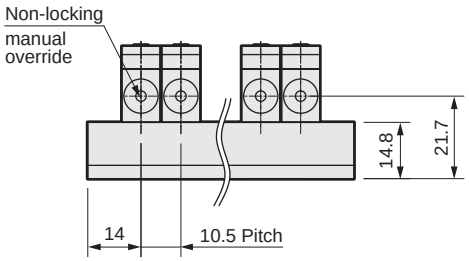

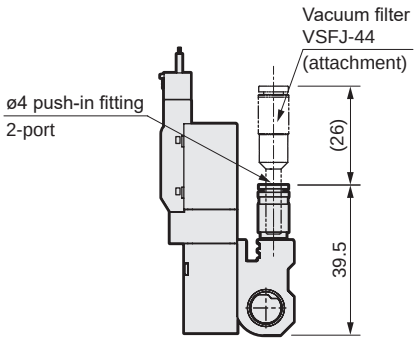

· ø6 push-in fitting (GS6/GS6F)

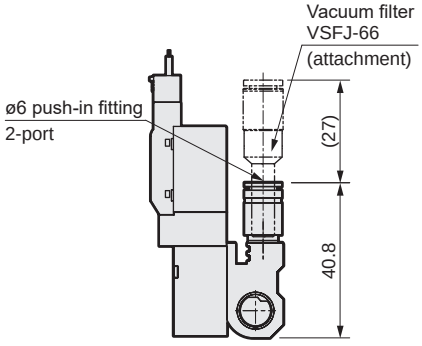

Station No.	2	3	4	5	6	7	8	9	10
L	38.5	49.0	59.5	70.0	80.5	91.0	101.5	112.0	122.5
L1	30.5	41.0	51.5	62.0	72.5	83.0	93.5	104.0	114.5

Dimensions (MV3QRA110-M5-V1) sensor equipped

· 2-position single (self-reset): grommet lead wire

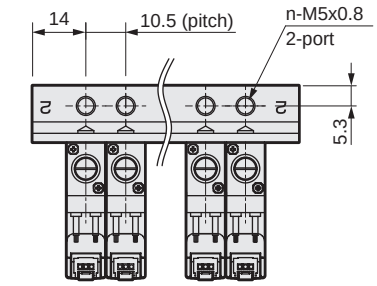

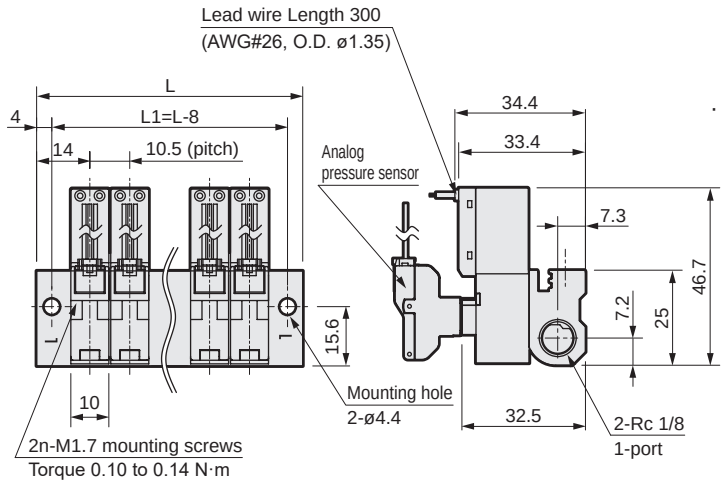

· C-connector (C2/C2*/C3)

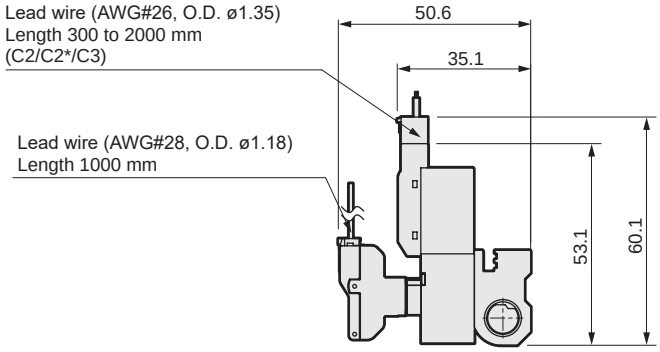

· D-connector (D2/D2*/D3)

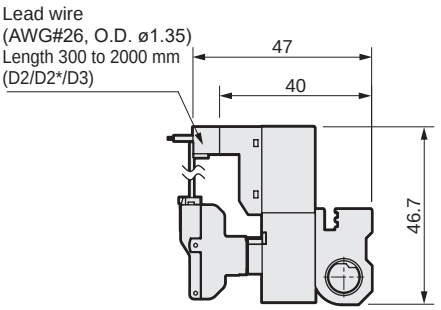

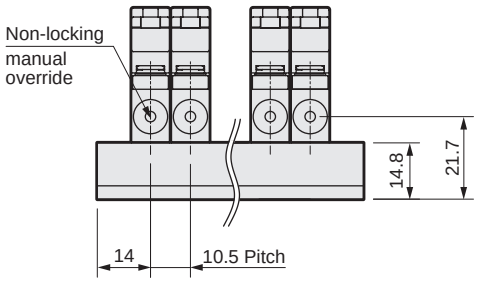

· ø4 push-in fitting (GS4/GS4F)

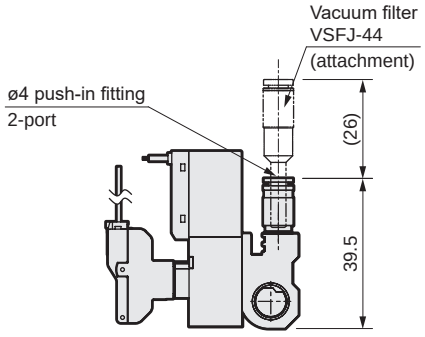

· ø6 push-in fitting (GS6/GS6F)

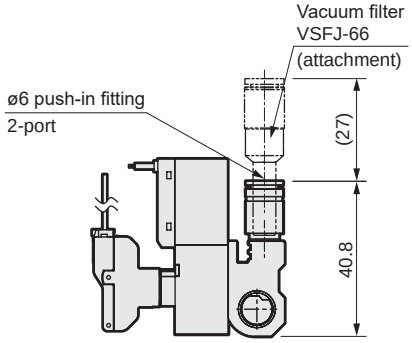

Station No.	2	3	4	5	6	7	8	9	10
L	38.5	49.0	59.5	70.0	80.5	91.0	101.5	112.0	122.5
L1	30.5	41.0	51.5	62.0	72.5	83.0	93.5	104.0	114.5

Dimensions (MV3QRB120-M5-V1) sensor equipped

· 2-position single (self-hold): C-connector (C2/C2*/C3)

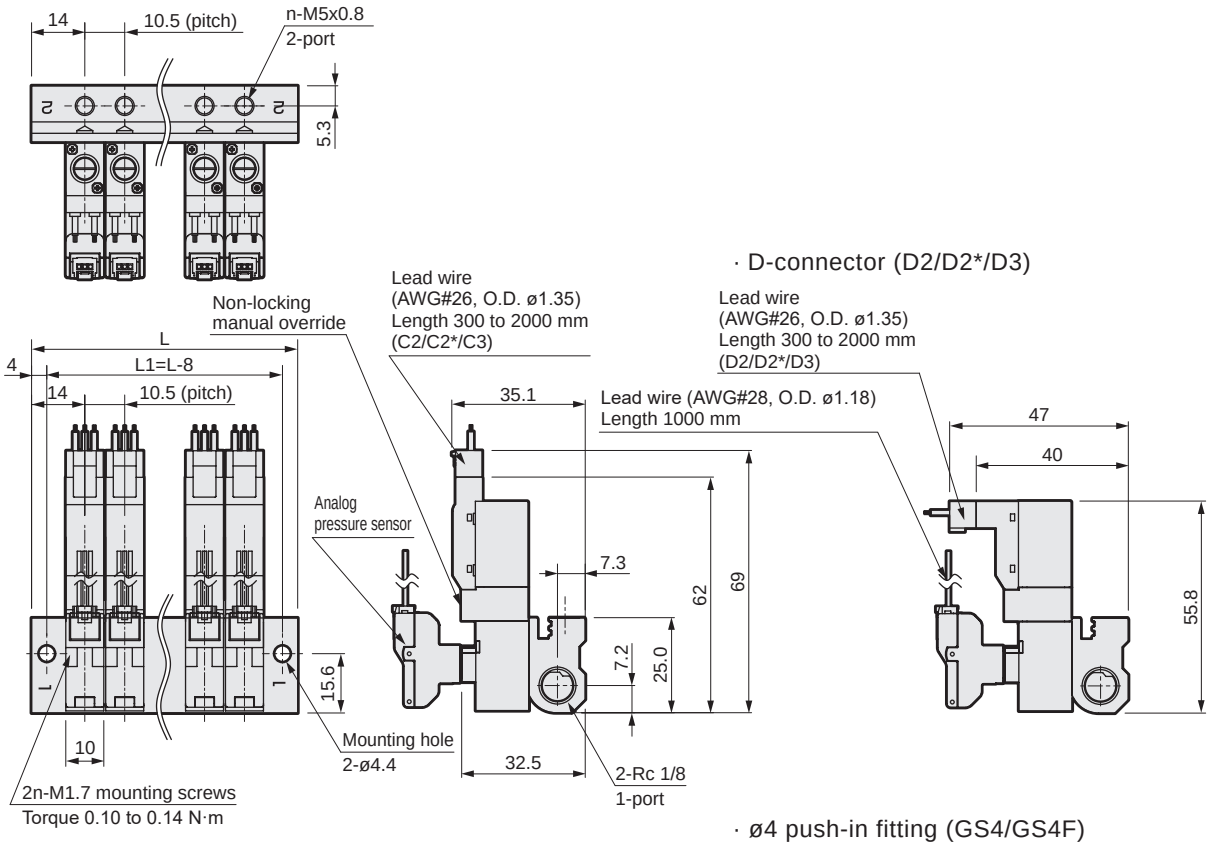

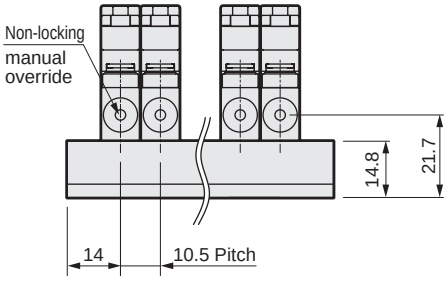

· ø4 push-in fitting (GS4/GS4F)

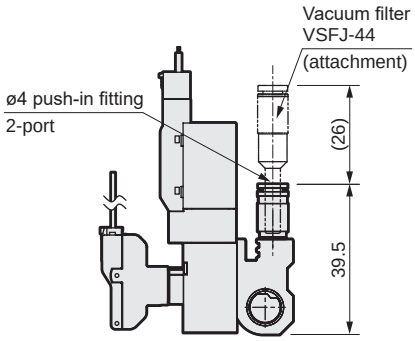

· ø6 push-in fitting (GS6/GS6F)

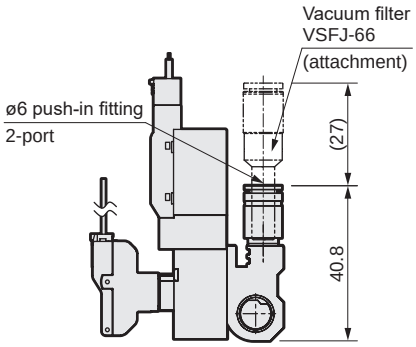

Station No.	2	3	4	5	6	7	8	9	10
L	38.5	49.0	59.5	70.0	80.5	91.0	101.5	112.0	122.5
L1	30.5	41.0	51.5	62.0	72.5	83.0	93.5	104.0	114.5

Internal structure and parts list

● Sensor equipped solenoid valve manifold

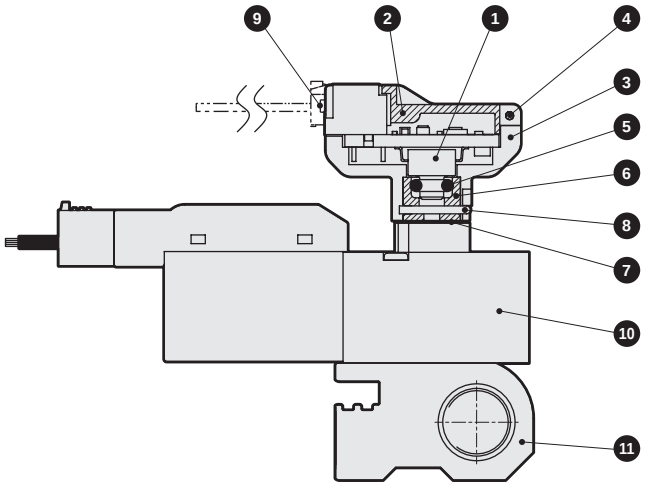

No.	Part name	Material
1	Pressure sensor	(Diffusion semiconductor strain gauge)
2	Cover	Resin
3	Body	Resin
4	Roll pin	Stainless steel
5	O-ring	Fluoro rubber
6	Sensor adaptor	Aluminum alloy
7	Gasket	Nitrile rubber/steel
8	Fixing pin	Stainless steel
9	Connector socket assembly	-
10	Solenoid valve	*1
11	Manifold base	Aluminum alloy

*1 Refer to direct acting 3-port valve 3QRA1/3QRB1 Series (page 1539) for internal structure and operating principle of the equipped solenoid valve.

Solenoid valve C type/D-connector connection

● 2-position single (self-reset)

Referring to the figure below, wire the connectors with (1) to (4).

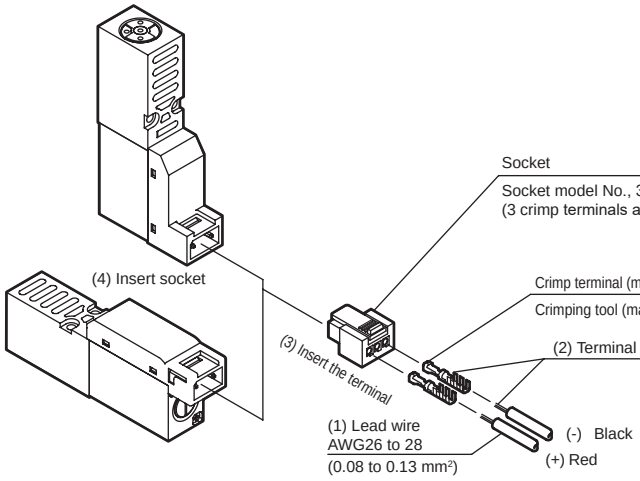

* For details of crimp terminals and crimping tools, Contact CKD separately.

[Procedure]

(1) Peel the sheath at the end of the lead wire by 2 to 3 mm.
(2) Crimp the lead wire with a dedicated tool.
(3) Insert the terminal into holes at both ends of the socket.
(Note) Check the orientation for insertion.
(4) Insert the socket into the solenoid valve connector section.

Note: Pay attention to the polarity of ⊕ ⊖ for the optional H (Large flow rate) specification. An incorrect polarity will not result in a short-circuit, but the valve will not operate.

● 2-position single (self-hold)

Referring to the figure below, wire the connectors with (1) to (4).

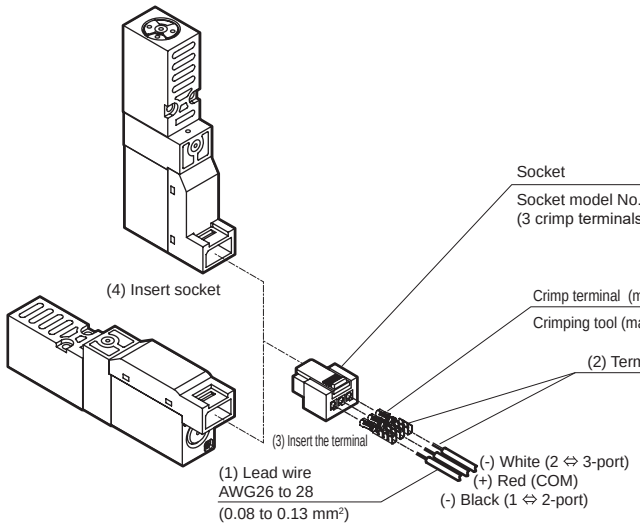

* For details of crimp terminals and crimping tools, contact CKD.

[Procedure]

(1) Peel the sheath at the end of the lead wire by 2 to 3 mm.
(2) Crimp the lead wire with a dedicated tool.
(3) Insert the terminal into holes at both ends of the socket.
(Note) Check the orientation for insertion.
(4) Insert the socket into the solenoid valve connector section.

Note: Use caution with polarity of ⊕ ⊖.
An incorrect polarity will not result in a short-circuit, but the valve will not operate.

Pneumatic components

Safety Precautions

Be sure to read this section before use.
Also refer to the precautions in "Direct acting 3-port valve 3Q Series" of Intro Page 59 for general precautions for using valves

Product-specific cautions: 3QR vacuum switch unit MV3QR Series

Design/selection

WARNING

- This product is designed for vacuum. Use only vacuum. Also, use with pressure or temperature exceeding the specifications range may result in damage or operational faults.
- If the adsorbed object (workpiece) is at the risk of falling off, be sure to provide a preventive measure for safety.
- The solenoid valve allows slight leakage. Using it in vacuum for long periods may cause problems.
- Do not use the product in areas containing corrosive, flammable or explosive gases, chemicals, sea water and water vapor. Never suction these up.
- It is equipped with mesh filters at air ports of the vacuum port and manifold, which prevent the intake of foreign matter, and prevent problems from occurring in the valve (mesh diameter: ø0.3 mm).
  Do not detach or press down the mesh filter forcibly. The filter could deform which could result in a pressure loss, causing problems. If contaminants and foreign matters are found on the filter surface, blow them lightly, or remove them by tweezers, etc.

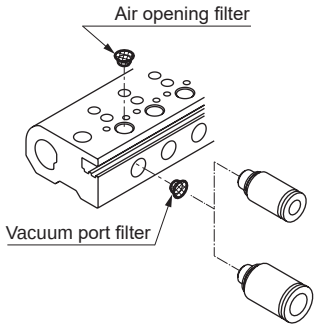

- If the foreign matter trapping capacity of vacuum suction is insufficient for your application, you can either use the optional insert vacuum filter or install vacuum filters in between the pad/nozzle and valve.
  When using vacuum filters, be sure to perform routine inspections and cleaning, as well as regular maintenance and replacement. Clogging could decrease performance.

CAUTION

- The suction tact may be delayed due to insufficient intake flow rate as the number of solenoid valves simultaneously operated increases. Make sure that the design has sufficient margin by following the table below.

■ [Recommended] manifold maximum simultaneous operation max. station number

Vacuum supply conditions		Solenoid valve specifications	
Bore size *		Standard specs	Large flow rate specs
ø4	One side supply	3 stations	2 stations
	Dual-sided supply	7 stations	5 stations
ø6	One side supply	6 stations	7 stations
	Dual-sided supply	10 stations	10 stations

* Be sure that the tube length is less than 1 m

Mounting, installation and adjustment

CAUTION

- Do not use a spiral hose.
  Especially when used at the vacuum side, malfunction due to the piping resistance will occur as below.
  (1) Delay of vacuum achievement time
  (2) Loss of vacuum at the suction end due to lowering of flow rate
  (3) Unstable operation of the vacuum switch
- Be sure that the vacuum side piping is as short as and with the largest I.D. possible. Piping that is too long or thin may cause the response time to be delayed when releasing, and make it difficult to ensure the required suction flow rate.
- For cautions regarding push-in fittings, also read “Safety precautions for fittings/tubes” in “Pneumatic/ Vacuum/Auxiliary Components (No. CB-024-SA)”.

Use/maintenance

WARNING

- Do not apply high tensile force or bending force to the lead wire. Failure to observe this could lead to disconnection.

CAUTION

- The coil may become hot due to ambient temperature or energizing time. Be sufficiently careful when touching the valve.
- Long energizing time causes performance deterioration of the solenoid valve. Note the following points for the standard flow rate in particular.
  · The energizing time should be the same as or below the de-energizing time for intermittent energizing.
  · One energizing cycle should be 5 minutes or less.
  · Set so that the peripheral temperature of the solenoid valve does not exceed max. working temperature.
- Use appropriate torque to tighten the pipes when connecting them.
  · The purpose is to prevent air leakage and damage to bolts. First tighten the bolts by hand to ensure that the threads are not damaged, then use a tool.

Port thread	Tightening torque N·m
M5	1.0 to 1.5
Rc1/8	3 to 5

- Tighten the solenoid valve with an appropriate torque when installing it.
  · Excessive tightening may damage the valve.
  Tightening torque: 0.10 to 0.14 N·m
  · Use a #0 screwdriver.

Product-specific cautions: Pressure sensor

Design/selection

⚠ WARNING

■ Use this product in accordance with specifications.
· Use for applications, or at load currents, voltages, temperatures, impacts or sites excluded from the specifications could result in damage or malfunctions.

■ This product is used for air and low vacuum.

■ The customer is responsible for checking safety and taking appropriate countermeasures for using fluids other than applicable fluids. Do not use this product for corrosive or flammable gases or for oxygen.

■ Power supply voltage
Use a stable DC power supply. When using a unit power supply such as switching power supply, ground the F.G. (frame ground). Also, do not use this product at levels exceeding the power supply voltage. The product could rupture or burn if voltage exceeding the working range is applied or if an AC power supply (100 VAC) is applied.

■ Load short circuit
Do not short-circuit the load. Failure to observe this could result in rupture or burning.

■ Incorrect wiring
Avoid incorrect wiring such as mistaken power source polarities, etc. Failure to observe this could result in rupture or burning.

■ Connecting load
The output impedance of the analog output section is 1 kΩ . If the impedance of the connecting load is small, output error increases. Check error with the impedance of the connecting load before using.

⚠ CAUTION

■ When applying positive pressure for vacuum burst to the product to check vacuum suction, check that it does not exceed the specified proof pressure.

Mounting, installation and adjustment

⚠ WARNING

■ There is a risk of electric shock by touching the electrical wiring connections (bare, live parts). Always turn the power OFF before carrying out wiring. Never touch the live parts with wet hands.

⚠ CAUTION

■ Do not apply high tensile force (10N or more) or bending force to the lead wire of the sensor head. Failure to observe this could result in a wire break or damage.

■ Wiring
· Turn power OFF before wiring this product. Discharge static electricity from personnel and tools before and during work. Connect and wire bending-resistant material, such as robot wire material, for the movable sections.

■ To connect to an output terminal or power supply terminal (relay, valve, etc.), install a surge voltage absorption circuit. Avoid applications that exceed the rated current. Do not short-circuit the output terminal with other terminals. It could damage the sensor.

■ Installation
Install this product and wiring as far away as possible from sources of noise such as power distribution wires. Wiring or application that applies noise may cause damage.
Provide separate countermeasures for surge applied to the power cable.

■ When installing the product, hold the body section so that impact is not applied to the body and excessive stress is not applied to the lead wire.

■ Do not disassemble or dismantle the product. Disassembling it may cause the parts to be ejected when heated.

■ The degree of protection is equivalent to IP40. Avoid dripping water or oil, etc., during use.

■ Do not rotate or oscillate the pressure sensor assembly.

How to replace pressure sensor

[Removal]
1. Pull out the fixing pins using a tool with a narrow tip.
2. Pull out the pressure sensor assembly.
3. Remove the O-ring. (Note that the O-ring may be fixed on the rear side of the pressure sensor)

[Mounting]
1. Insert a new O-ring to the sensor adapter.
2. Confirm that there is no debris, etc., on the O-ring, and then re-assemble it to the original position.
3. Pull on the pressure sensor assembly to confirm that it is properly installed.

■ Pay careful attention when pulling out the fixing pins. Hitting against other parts of the body or applying impact on the sensor may cause damage.

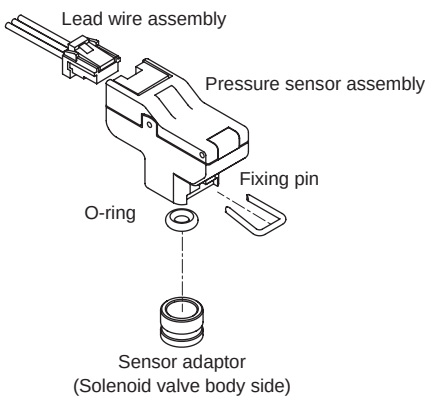

How to fill out MV3QRA/B1 manifold specifications sheet

● Manifold model No.

MV3QR(A)/B1 [8] 0 - [M5] - [C2] [H] - [8] - [3] - [V1]

Piping *1 Port size Connection Option Station No. Voltage Sensor

*1: Mixing of the points specified above is not possible. Specify by model No.

Part name	Model No.	Layout position										Quantity
		1	2	3	4	5	6	7	8	9	10	
Valve	3QRA119- □											
	3QRB119- □											
	3QRA129- □											
	3QRB129- □											
Valve (sensor equipped)	3QRA119- □ + sensor	○	○	○		○	○	○				6
	3QRA129- □ + sensor											
Masking plate	3QR1-MP				○				○			2

Preparing manifold specifications sheet

● Complete from the left end, with the piping port facing rear.

● Select and fill out the appropriate form from the manifold specifications sheet for each model.

MV3QRA/B1 Manifold specifications sheet

Issued / /

Company

Contact

Order No.

● Contact ● Quantity set(s) ● Delivery date /

Slip No.	Order No.

● Manifold model No.

MV3QR [A/B] 1 [ ] 0 - [M5] - [ ] [ ] - [ ] - [ ] - [ ]

*1 Port size Connection Option Station No. Voltage Sensor

*1: Mixing of the points specified above is not possible. Specify by model No.

Part name	Model No.	Layout position										Quantity
		1	2	3	4	5	6	7	8	9	10	
Valve	3QRA119- □											
	3QRB119- □											
	3QRA129- □											
	3QRB129- □											
Valve (sensor equipped)	3QRA119- □ + sensor											
	3QRA129- □ + sensor											
Masking plate	3QR1-MP											

3MA0/3MB0

Direct acting 3-port valve

PICOSOL (Small pneumatic valve)

Overview

The 3MA0/3MB0 series, 3-port valves are super compact direct acting poppet valves with a width of 10 mm which supports miniaturization of devices.
Single units and manifolds are available as a number of variations. Suitable for operating cylinders of ø6 to ø16.

Features

Space saving

Compact design with a valve width of 10 mm. Contributes to reduction of the size of devices, etc., being assembled.

Low wattage

Due to the low wattage design (25 mA with 24 VDC), it is possible to connect the unit directly with various electronic control circuits.

Selectable electrical connections

Series available for lead wire, C-connectors, and D-connectors.
Combinations with lamp and surge suppressor are also available.

Optimal for the fields of semiconductors and precision instruments

Compact, highly reliable, and low wattage design.
Appropriate for semiconductor manufacturing lines and precision fields.

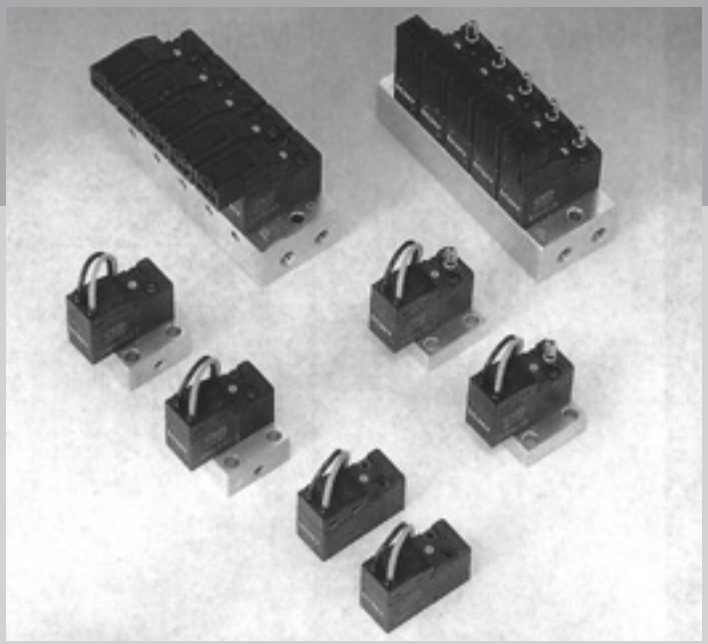

CONTENTS

Series variation	1592
Electrical connections list (wire connections/circuit)	1593
Discrete valve	
● Body piping (3MA0)	1594
● Sub-plate piping (3MB0)	1594
Individual wiring manifold	
● Body piping (M3MA0)	1596
● Sub-plate piping (M3MB0)	1596
Technical data	
(1) Flow characteristics/connector wiring method	1604
⚠ Safety precautions	1605

Series name/piping method			No. of ports	Position Number of solenoids JIS symbol	Valve performance: Effective cross-sectional area (mm^2)	Valve performance: Applicable cylinder bore size	Voltage (V)	Switching position: 2-position single normally closed	Switching position: Mix manifold	A Port size: Barbed fitting: ø4 Barbed fitting	A Port size: Barbed fitting: ø6 Barbed fitting	A Port size: Female thread: M3	A Port size: Female thread: M5	A Port size: ø4 push-in fitting	Electrical connections: Grommet lead wire	Electrical connections: C-connector	Electrical connections: D-connector	Page
Single unit	Direct	**3MA0** 3-port valve 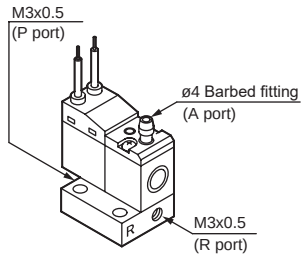	3-port	● 2-position Single (NC) 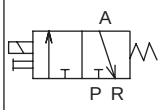	P→A 0.1 A→R 0.15	ø6 to ø16	24 DC 12 DC Option 6 DC 5 DC	●		●					●	●	●	1594
	Sub-plate	**3MB0** 3-port valve ● Single solenoid valve (3MB019-00) Manual override Non-locking 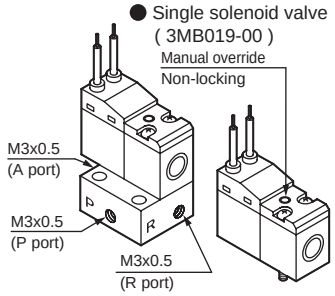						●				●			●	●	●	1594
Individual wiring manifold	Direct	**M3MA0** 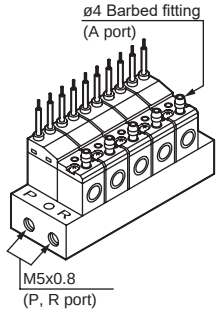						●	●	●					●	●	●	1596
	Sub-plate	**M3MB0** 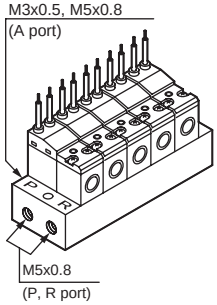						●	●	●	●	●	●	●	●	●	●	1596

Electrical connections

Discrete valve/individual wiring manifold

Manual override

Blank Grommet lead wire

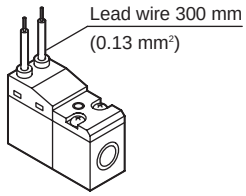

D1 D-connector without lead wire

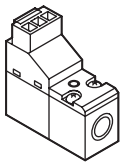

Non-locking

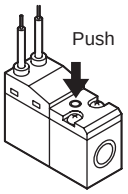

C C-connector lead wire

● Lead wire length
C : 300 mm
C00 : 500 mm
C01 : 1000 mm
C02 : 2000 mm

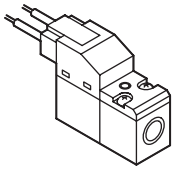

D2 D-connector lead wire with surge suppressor and indicator lamp

● Lead wire length
D2 : 300 mm
D20 : 500 mm
D21 : 1000 mm
D22 : 2000 mm

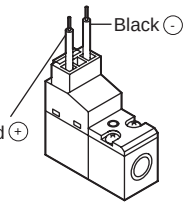

C1 C-connector without lead wire

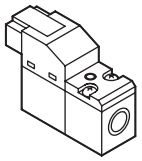

D3 D-connector without lead wire with surge suppressor and indicator lamp

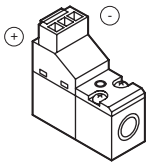

C2 C-connector lead wire with surge suppressor and indicator lamp

● Lead wire length
C2 : 300 mm
C20 : 500 mm
C21 : 1000 mm
C22 : 2000 mm

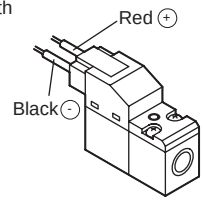

* Note that it has polarity.

Internal circuit diagram with surge suppressor/lamp

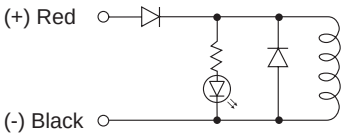

* Diode is used as a surge suppressor.

C3 C-connector without lead wire with surge suppressor and indicator lamp

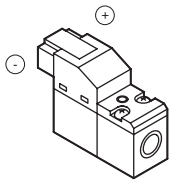

D D-connector lead wire

● Lead wire length
D : 300 mm
D00 : 500 mm
D01 : 1000 mm
D02 : 2000 mm

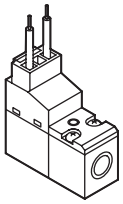



Discrete valve; body piping/sub-plate piping
Direct acting 3-port small pneumatic valve

3MA0/3MB0 Series

● Cylinder bore size: ø6 to ø16

CE Refer to the Ending for details.

RoHS CAD

JIS symbol

● 3-port valve NC

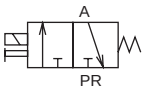

Common specifications

Item	Description
Valve and operation	Direct acting poppet valve
Working fluid	Compressed air
Max. working pressure MPa	0.70 (≈100 psi, 7 bar)
Min. working pressure MPa	0.00 (≈0 psi, 0 bar)
Proof pressure MPa	1.05 (≈150 psi, 10.5 bar)
Ambient temperature °C	5 (41°F) to 50 (122°F)
Fluid temperature °C	5 (41°F) to 50 (122°F)
Lubrication	Not required
Degree of protection	Dust-proof
Vibration resistance m/s^2	50 or less
Shock resistance m/s^2	300 or less
Atmosphere	Cannot be used in corrosive gas environment.

Electrical specifications

Item	Description	
Rated voltage V	24 DC	12 DC
Voltage fluctuation range	±10%	
Rated current A *1	0.025 (0.029)	0.050 (0.058)
Power consumption W *2	0.6 (0.7)	0.6 (0.7)
Thermal class	B	
Temperature rise °C	50 (122°F)	

*1 : The values in ( ) are with a surge suppressor and indicator lamp.
*2 : The power consumption for 6/5 VDC will be 0.9 (1.0) W.

Individual specifications

Item		3MA0	3MB0
Port size	P/R port	M3 *1	M3 *1
	A port	ø4 Barbed fitting	

*1 : Use barbed fitting FTS4-M3 with port size M3.

Performance/characteristics by model

Item		3MA0	3MB0
Effective cross-sectional area *1 mm^2		P→A:0.1, A→R:0.15	
Response time *2 ms		10 or less	

*1 : The effective cross-sectional area is the value for the single unit solenoid valve unit.
*2 : The response time is the value at 0.5 MPa supply pressure, with no lubrication, and with the power ON. It depends on the pressure and the lubricant quality.

Weight

Item	3MA0	3MB0
Weight g	18	

Ozone-proof specifications

** - Voltage - **P11** *4

*4 : The power consumption will be 0.9 (1.0) W.

CE marking specifications

** - Voltage - **ST**

・Standard 24 VDC below voltage is CE marking-compliant even if “ST” is not indicated in the model No.

How to order discrete valve

● Body piping

3MA0 1 0 -T4-C2-3

● Sub-plate piping

3MB0 1 0 -M3-C2-3

● Single unit solenoid valve unit (without sub-plate)

3MB0 1 9 -00-C2-3

Ⓐ Model No.

Solenoid position: 2-position single solenoid, normally closed

Solenoid valve operation classification

Ⓑ Port size

Ⓒ Electrical connections *2

* Refer to page 1593 for the circuit diagram with surge suppressor/lamp.

Ⓓ Voltage

Code	Description		Ⓐ Model No. Body piping 3MA0	Ⓐ Model No. Sub-plate piping 3MB0
Ⓑ Port size				
Port name	A port	P/R port		
T4	ø4 Barbed fitting	M 3x0.5	● *1	
M3	M 3x0.5			●
Ⓒ Electrical connections				
Blank	Grommet lead wire (300 mm)		●	●
C-connector (lead wire lateral direction)				
C	Lead wire (300 mm)		●	●
C00	Lead wire (500 mm)		●	●
C01	Lead wire (1000 mm)		●	●
C02	Lead wire (2000 mm)		●	●
C1	Without lead wire		●	●
C2	Lead wire (300 mm), surge suppressor/indicator lamp		●	●
C20	Lead wire (500 mm), surge suppressor/indicator lamp		●	●
C21	Lead wire (1000 mm), surge suppressor/indicator lamp		●	●
C22	Lead wire (2000 mm), surge suppressor/indicator lamp		●	●
C3	No lead wire, with surge suppressor/indicator lamp		●	●
D-connector (lead wire upward direction)				
D	Lead wire (300 mm)		●	●
D00	Lead wire (500 mm)		●	●
D01	Lead wire (1000 mm)		●	●
D02	Lead wire (2000 mm)		●	●
D1	Without lead wire		●	●
D2	Lead wire (300 mm), surge suppressor/indicator lamp		●	●
D20	Lead wire (500 mm), surge suppressor/indicator lamp		●	●
D21	Lead wire (1000 mm), surge suppressor/indicator lamp		●	●
D22	Lead wire (2000 mm), surge suppressor/indicator lamp		●	●
D3	No lead wire, with surge suppressor/indicator lamp		●	●
Ⓓ Voltage				
3	Standard	24 VDC	●	●
4		12 VDC	●	●
DC6V	Option	6 VDC	●	●
DC5V		5 VDC	●	●

Precautions for model No. selection

*1 : Use the tubes of the following model No. for the A port piping of 3MA0. FH-3224, F-1504, U-9532, U-9504

*2 : The lead wire used is AWG26 size. (7/0.16, outer diameter ø1.35, 0.13 mm^2)

[Example of model No.]

3MA010-T4-C-3

Ⓐ Model: 3MA0 (body piping)
Solenoid position : 2-position single solenoid, normally closed

Ⓑ Port size : ø4 barbed fitting (A port), M3 (P/R port)

Ⓒ Electrical connections : With C-connector/lead wire (300 mm)

Ⓓ Voltage : 24 VDC



Individual wiring manifold; body piping/sub-plate piping
3-port direct acting small pneumatic valve

M3MA0/M3MB0 Series

● Cylinder bore size: ø6 to ø16

CE Refer to the Ending for details. RoHS CAD

JIS symbol

● 3-port valve NC

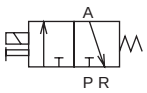

Common specifications

Item	Description
Manifold method	Manifold integrated
Manifold	Common supply/common exhaust
Station No.	2 to 20 stations
Valve and operation	Direct acting poppet valve
Working fluid	Compressed air
Max. working pressure MPa	0.70 (≈100 psi, 7 bar)
Min. working pressure MPa	0.00 (≈0 psi, 0 bar)
Proof pressure MPa	1.05 (≈150 psi, 10.5 bar)
Ambient temperature °C	5 (41°F) to 50 (122°F)
Fluid temperature °C	5 (41°F) to 50 (122°F)
Lubrication	Not required
Degree of protection	Dust-proof
Vibration resistance m/s²	50 or less
Shock resistance m/s²	300 or less
Atmosphere	Cannot be used in corrosive gas environment.

Electrical specifications

Item	Description	
Rated voltage V	24 DC	12 DC
Rated voltage fluctuation range	±10%	
Rated current A *1	0.025 (0.029)	0.050 (0.058)
Power consumption W *2	0.6 (0.7)	0.6 (0.7)
Thermal class	B	
Temperature rise °C	50 (122°F)	

*1: The values in ( ) are with a surge suppressor and indicator lamp.
*2: The power consumption for 6/5 VDC will be 0.9 (1.0) W.

Individual specifications

Item		3MA0	3MB0
Port size	P port	M5	
	A port	ø4 Barbed fitting	M3, M5, ø4 Push-in fitting ø4, ø6 Barbed fitting
	R port	M5	

Performance/characteristics by model

Item		3MA0	3MB0
Effective cross-sectional area *1 mm²		P→A:0.1, A→R:0.15	
Response time *2 ms		10 or less	

*1: The effective cross-sectional area is the value for the single unit solenoid valve unit.
*2: The response time is the value at 0.5 MPa supply pressure, with no lubrication, and with the power ON. It depends on the pressure and the lubricant quality.

Weight

Item		3MA0	3MB0
Weight (single only) g		10+26 x station No.	

[Mix manifold]

● How to list combination descriptions
When selecting a combination manifold (write 8 from Ⓑ), list the code (refer to table on right) for required functions and the arrangement No. (numbering up to specified station No. with left side as 1) in the field for remarks below the normal model No. display as shown in the example.

Code	Function
S1	2-position single
MP	Masking plate

1	2	3	4	5	6	7
2-position single (S1)	2-position single (S1)	2-position single (S1)	2-position single (S1)	2-position single (S1)	Masking plate (MP)	Masking plate (MP)

Example

The model No. when using a combination manifold of 7 stations with an array such as that in the arrangement shown at left with port A of M3MB0 and 24 VDC is

M3MB080-M3-7-3- 5 2
S1 MP
(**S1** = **1** to **5**, **MP** = **6**/**7**)

Enter the quantity to be used and display 0 even when none are going to be used.

● With a mix manifold, when using 10 or more actuators of the same model No., specify using the codes in the table below.

Actuator quantity	10	11	12	13	14	15	16	17	18	19
Code	A	B	C	D	E	F	G	H	I	J

How to order individual wiring manifold

● Single solenoid valve for manifold(Body piping)

3MA0 1 9 - T4 - C2 —— 3

● Individual wiring manifold (body piping)

M 3MA0 1 0 - T4 - C2 - 2 - 3 - 1 1

● Single solenoid valve for manifold (sub-plate piping)

3MB0 1 9 - 00 - C2 —— 3

● Individual wiring manifold (sub-plate piping)

M 3MB0 1 0 - M3 - C2 - 2 - 3 - 1 1

Indicate the valve function based quantity display position for when using a mix manifold. Refer to page 1596.

Ⓐ Model No. | Solenoid valve operation classification | Ⓑ Solenoid position | Ⓒ Port size | Ⓓ Electrical connections *4 | Ⓔ Station No. | Ⓕ Voltage

● For how to order masking plates, refer to page 1604.

Code	Description	Ⓐ Model No. Body piping 3MA0	Ⓐ Model No. Sub-plate piping 3MB0
Ⓑ Solenoid position			
1	2-position single normally closed	●	●
8	Mix manifold (for multiple solenoid positions)	●	●
Ⓒ Port size			
Port name	Port A / Port P/R		
T4	ø4 barbed fitting / M5	● *1	● *2
T6	ø6 barbed fitting / M5		● *2
M3	M3 / M5		●
M5	M5 / M5		●
GS4	ø4 push-in fitting / M5		● *3
Ⓓ Electrical connections			
Blank	Grommet lead wire(300 mm)	●	●
C-connector (lead wire lateral direction)			
C	Lead wire(300 mm)	●	●
C00	Lead wire(500 mm)	●	●
C01	Lead wire(1000 mm)	●	●
C02	Lead wire(2000 mm)	●	●
C1	Without lead wire	●	●
C2	Lead wire (300 mm), surge suppressor/indicator lamp	●	●
C20	Lead wire (500 mm), surge suppressor/indicator lamp	●	●
C21	Lead wire (1000 mm), surge suppressor/indicator lamp	●	●
C22	Lead wire (2000 mm), surge suppressor/indicator lamp	●	●
C3	No lead wire, with surge suppressor/indicator lamp	●	●
D-connector (lead wire upward direction)			
D	Lead wire(300 mm)	●	●
D00	Lead wire(500 mm)	●	●
D01	Lead wire(1000 mm)	●	●
D02	Lead wire(2000 mm)	●	●
D1	Without lead wire	●	●
D2	Lead wire (300 mm), surge suppressor/indicator lamp	●	●
D20	Lead wire (500 mm), surge suppressor/indicator lamp	●	●
D21	Lead wire (1000 mm), surge suppressor/indicator lamp	●	●
D22	Lead wire (2000 mm), surge suppressor/indicator lamp	●	●
D3	No lead wire, with surge suppressor/indicator lamp	●	●
Ⓔ Station No.			
2	2 stations	●	●
to	to		
20	20 stations		
Ⓕ Voltage			
3	Standard / 24 VDC	●	●
4	Standard / 12 VDC	●	●
DC6V	Option / 6 VDC	●	●
DC5V	Option / 5 VDC	●	●

*4
* Refer to page 1593 for the circuit diagram with surge suppressor/lamp.

Precautions for model No. selection

*1 : Use the tubes of the following model No. for the A port piping of 3MA0.
FH-3224, F-1504, U-9532, U-9504
*2 : For T4 and T6, screw in barbed fitting FTS4-M5 and FTS6-M5.
*3 : For GS4, screw push-in fitting GWS4-M5-S into the A port.
*4 : The lead wire used is AWG26 size. (7/0.16, ø1.35, 0.13 mm²)

[Example of model No.]

M3MA010-T4-C-7-3

Ⓐ Model: M3MA0 (body piping)
Ⓑ Solenoid position : 2-position single Normally closed
Ⓒ Port size : ø4 Barbed fitting (A port), M5 (P/R port)
Ⓓ Electrical connections : With C-connector/lead wire (300 mm)
Ⓔ Station No. : 7 stations
Ⓕ Voltage : 24 VDC

Ozone-proof specifications

** - Voltage - **P11** (Note)

Note: The power consumption will be 0.9 (1.0) W.

CE marking specifications

** - Voltage - **ST**

• Standard voltage of 24 VDC or less is CE marking-compatible even if the model No. is not indicated with "ST".

Internal structure and parts list

3MA0/3MB0

●3-port NC

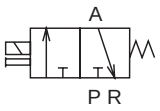

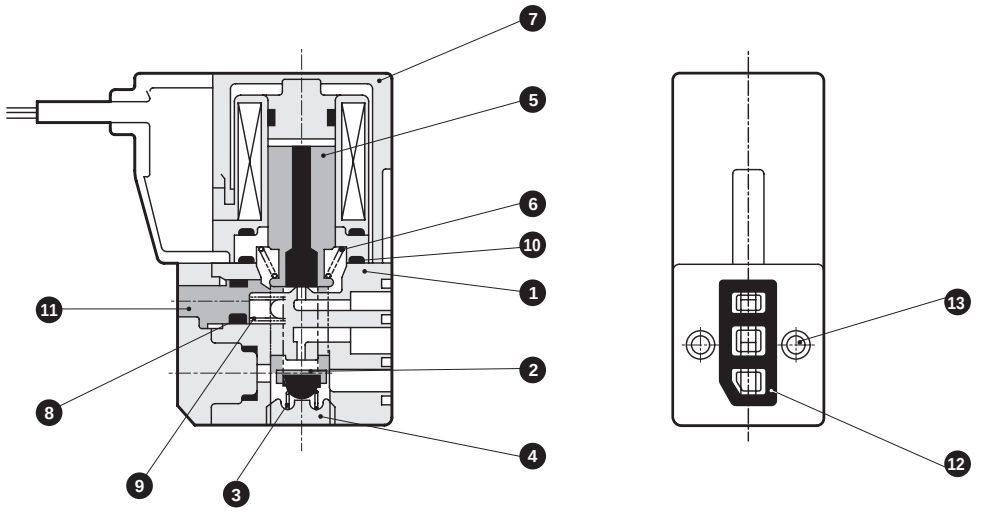

Main parts list

No.	Part name	Material	No.	Part name	Material
1	Body	Resin	8	O-ring	Fluoro rubber
2	Valve seat	Nitrile rubber	9	Manual spring	Stainless steel
3	Valve spring	Stainless steel	10	O-ring	Fluoro rubber
4	Bottom	Resin	11	Manual shaft	Resin
5	Plunger	Stainless steel, nitrile rubber	12	Body gasket	Fluoro rubber
6	Plunger spring	Stainless steel	13	Set screw	Steel
7	Coil assembly	-			

Operational principle

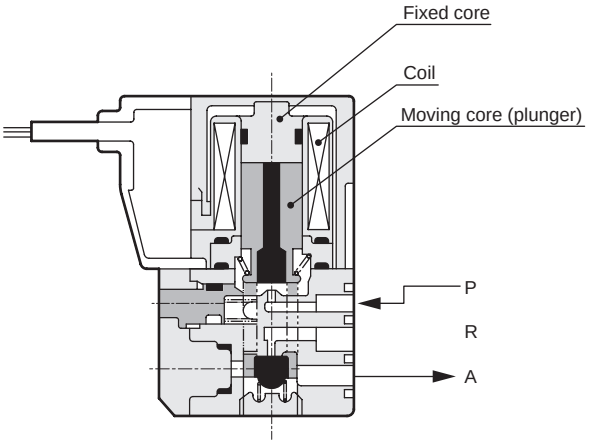

● When energized
When energizing the coil, the plunger is adsorbed onto the fixed core and the compressed air will flow from P to A.

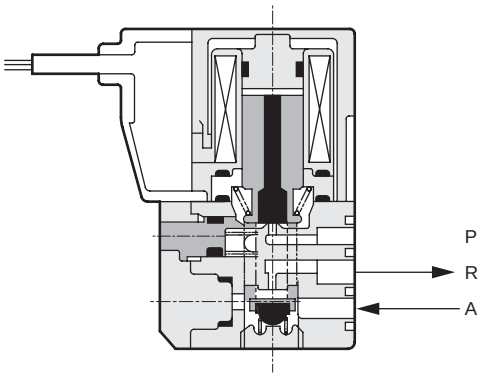

● When not energized
When the coil is placed in a non-energized state, the plunger will move away from the fixed core and the compressed air will flow from A to R.

Dimensions

3MA010-T4

● 3-port NC: grommet lead wire

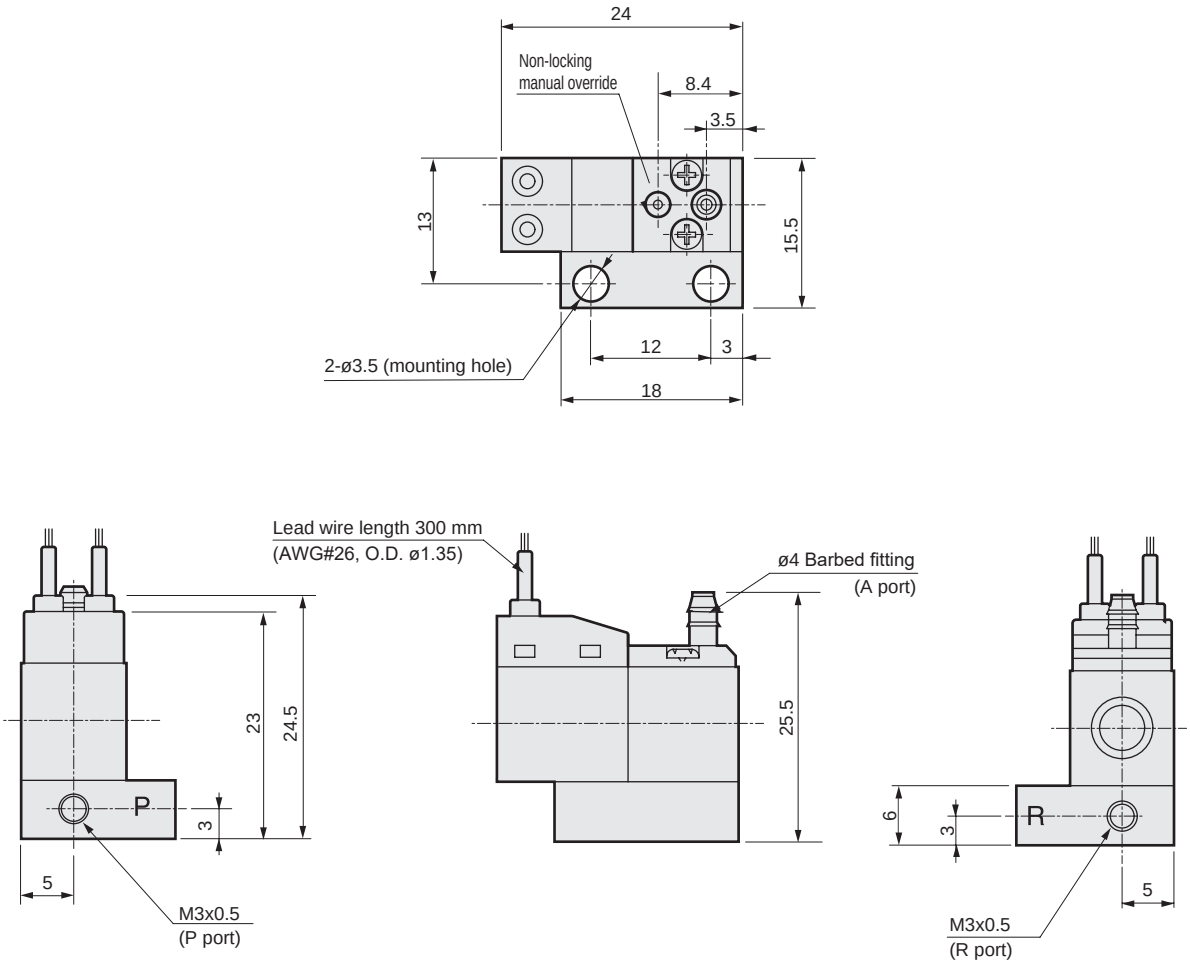

● C-connector: (C/C0*/C1/C2/C2*/C3)

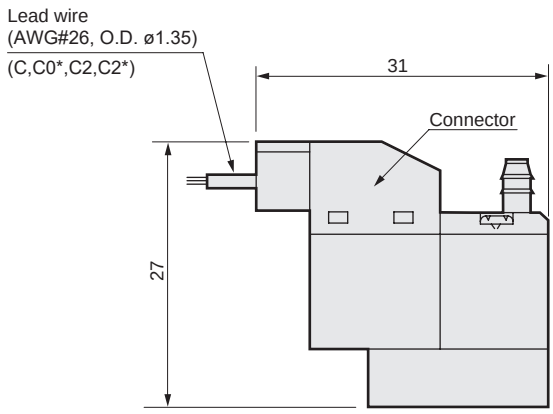

● D-connector: (D/D0*/D1/D2/D2*/D3)

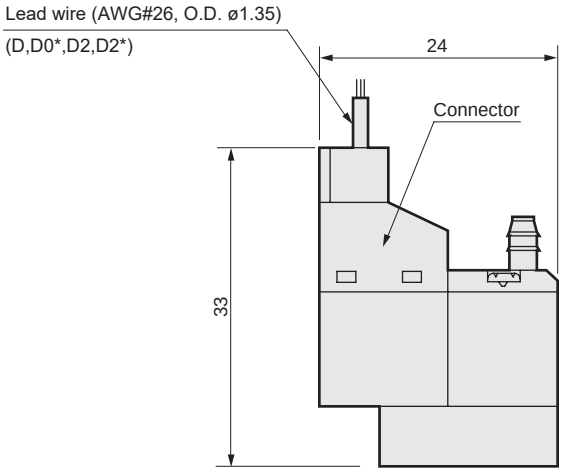

Dimensions CAD

3MB010-M3

● 3-port NC: grommet lead wire

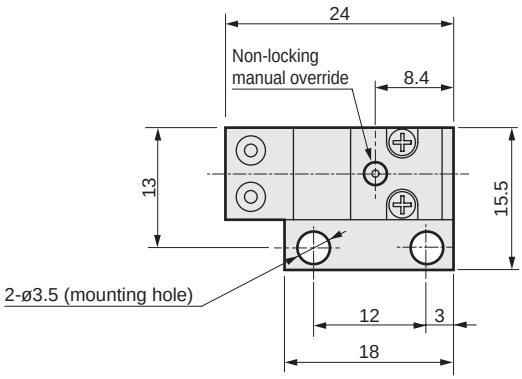

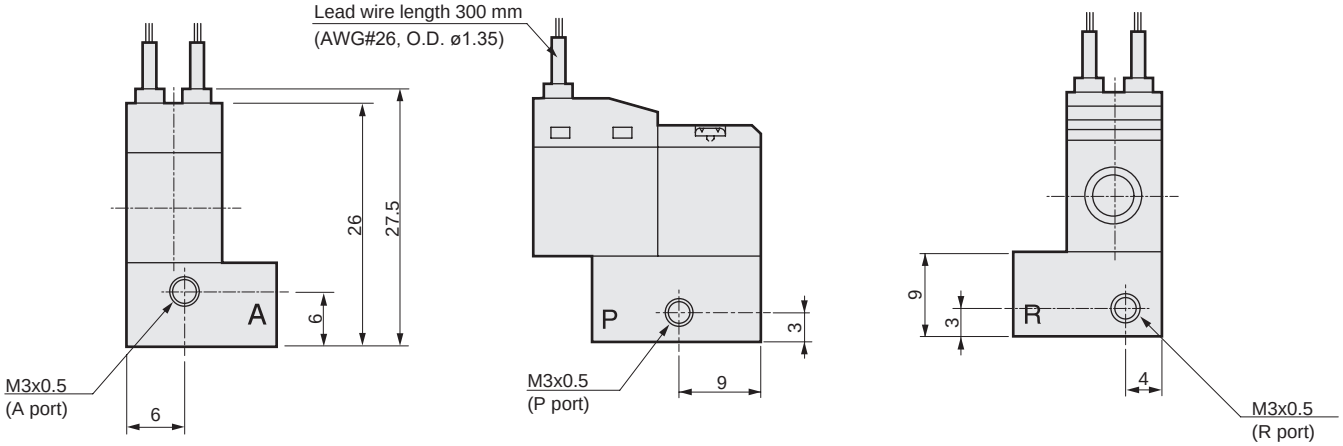

● C-connector: (C/C0*/C1/C2/C2*/C3)

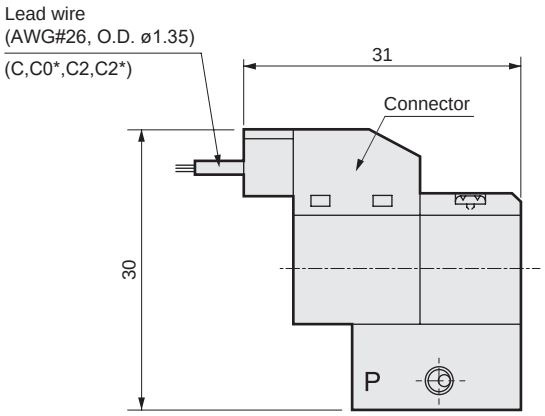

● D-connector: (D/D0*/D1/D2/D2*/D3)

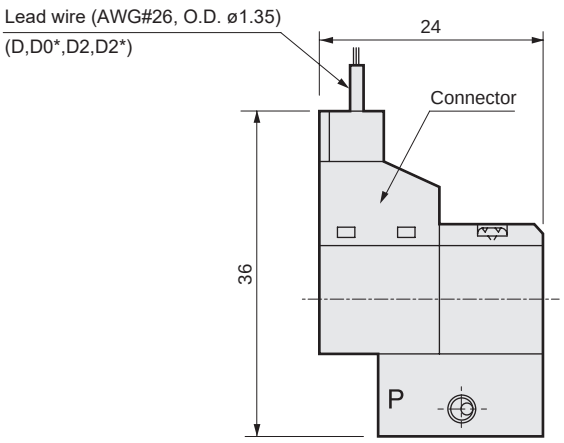

Dimensions

3MB019-00

● Single solenoid valve for manifold: grommet lead wire

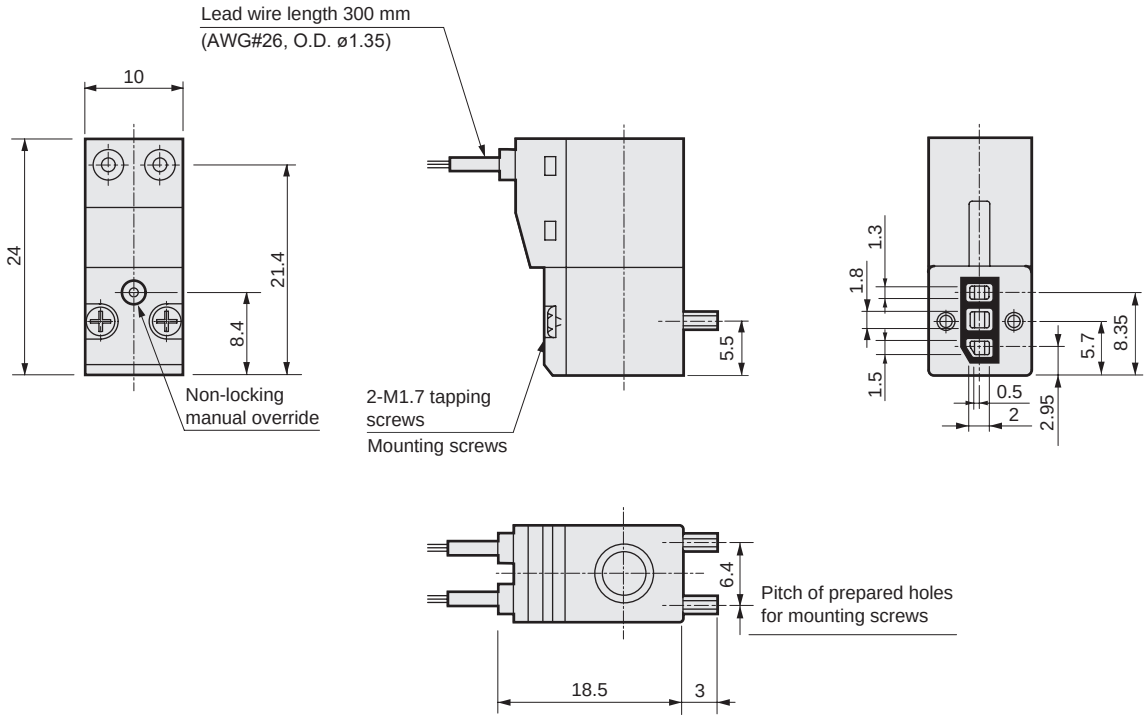

● C-connector: (C/C0*/C1/C2/C2*/C3)

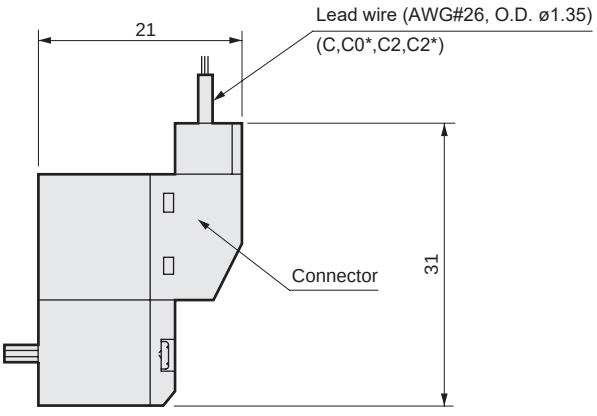

● D-connector: (D/D0*/D1/D2/D2*/D3)

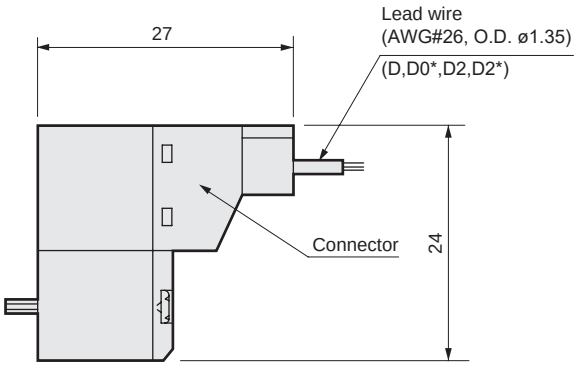

Dimensions CAD

M3MA010-T4

● Body piping A type: grommet lead wire

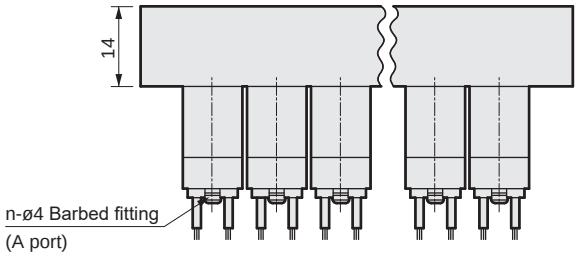

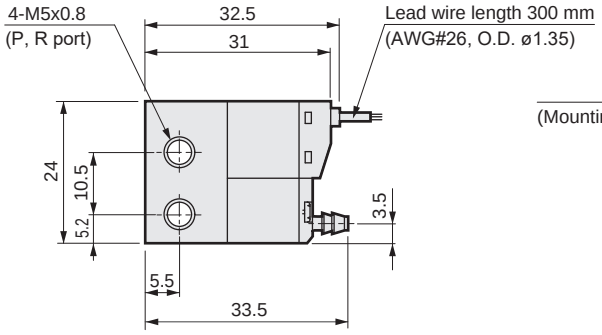

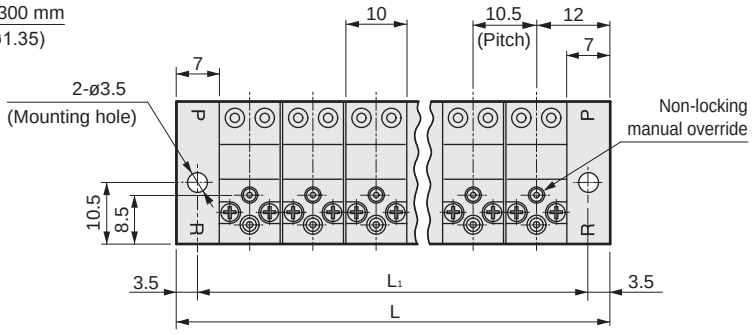

Stn No.	2	3	4	5	6	7	8	9	10	11	12	13	14	15	16	17	18	19	20
L_1	27.5	38	48.5	59	69.5	80	90.5	101	111.5	122	132.5	143	153.5	164	174.5	185	195.5	206	216.5
L	34.5	45	55.5	66	76.5	87	97.5	108	118.5	129	139.5	150	160.5	171	181.5	192	202.5	213	223.5

● C-connector: (C/C0*/C1/C2/C2*/C3)

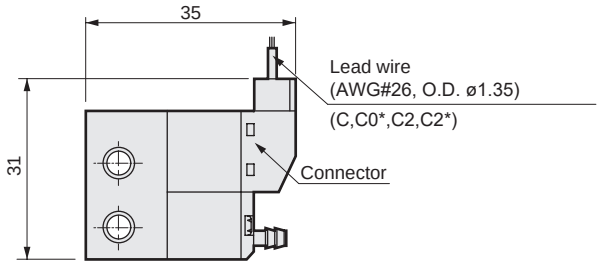

● D-connector: (D/D0*/D1/D2/D2*/D3)

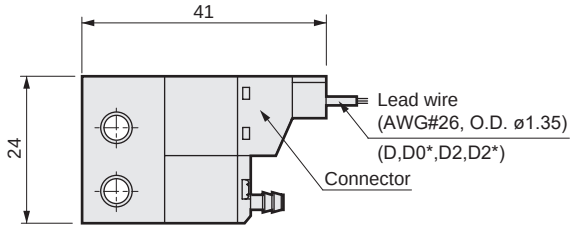

Dimensions CAD

M3MB010-M3/M5

● Sub-plate piping B type: grommet lead wire

A port: M5

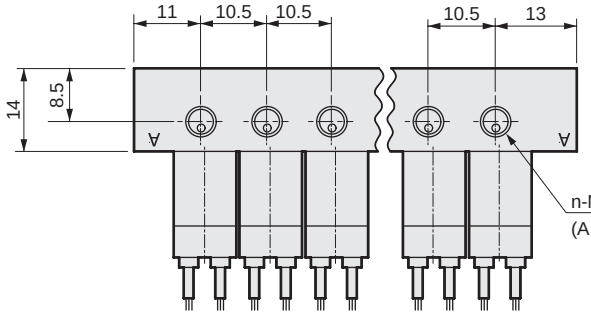

A port: M3

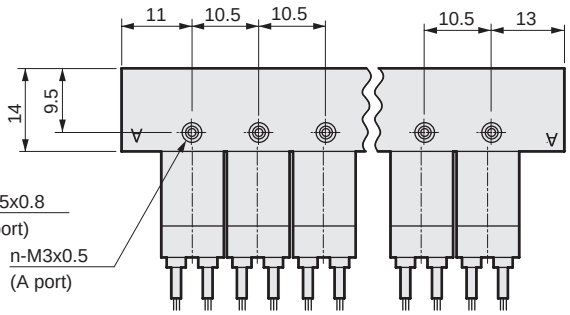

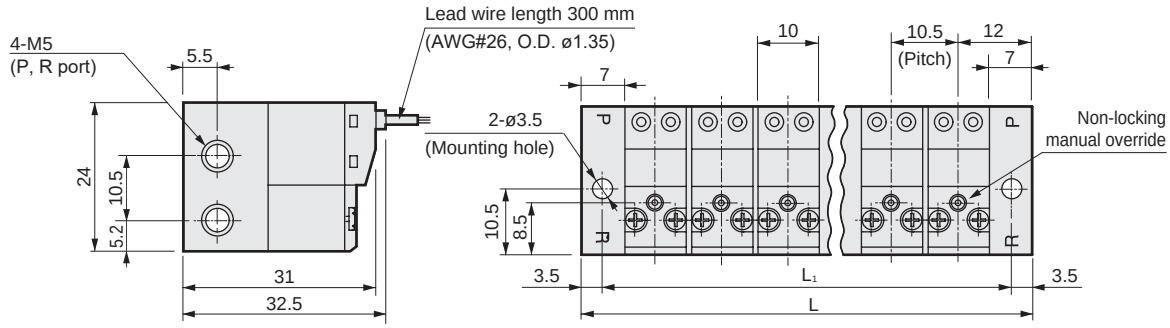

Stn No.	2	3	4	5	6	7	8	9	10	11	12	13	14	15	16	17	18	19	20
L_1	27.5	38	48.5	59	69.5	80	90.5	101	111.5	122	132.5	143	153.5	164	174.5	185	195.5	206	216.5
L	34.5	45	55.5	66	76.5	87	97.5	108	118.5	129	139.5	150	160.5	171	181.5	192	202.5	213	223.5

● C-connector: (C/C0*/C1/C2/C2*/C3)

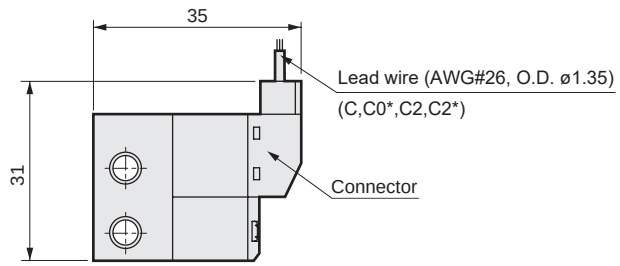

● D-connector: (D/D0*/D1/D2/D2*/D3)

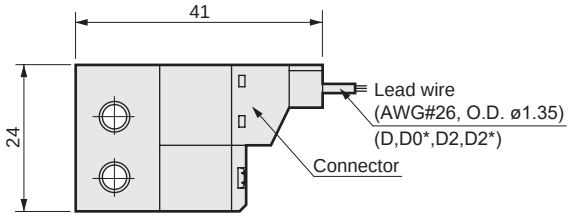

Flow characteristics

3MA0/3MB0

Note) The flow rate will vary depending on the sub-plate, fitting, and tube. Use the values as a reference only.

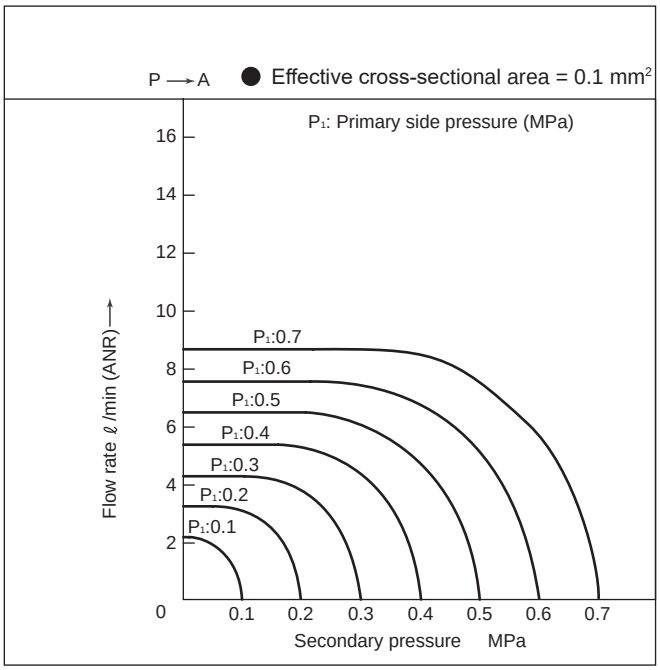

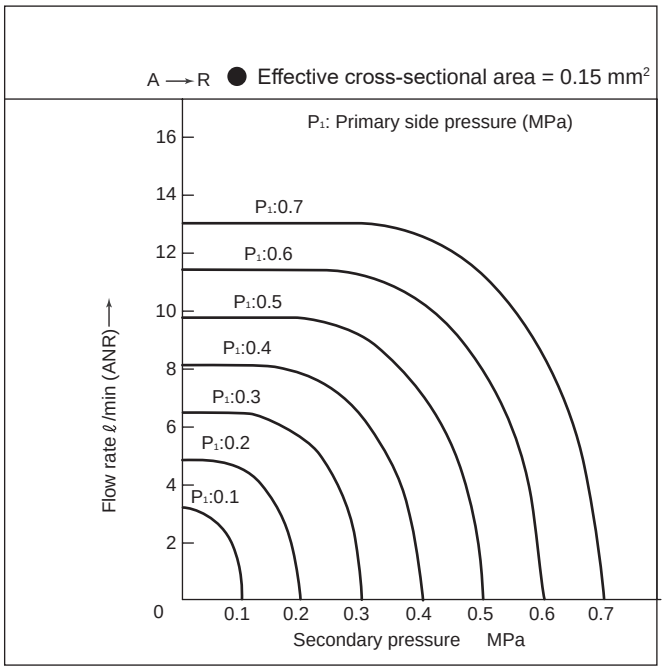

C type / D-connector wiring method

Referring to the figure below, wire the connectors with (1) to (4).

[Procedure]

(1) Peel the sheath at the end of the lead wire by 2 to 3 mm.
(2) Crimp the lead wire with a dedicated tool.
(3) Insert the terminal into holes at both ends of the socket.
(Note) Check the orientation for insertion.
(4) Insert the socket into the solenoid valve connector section.

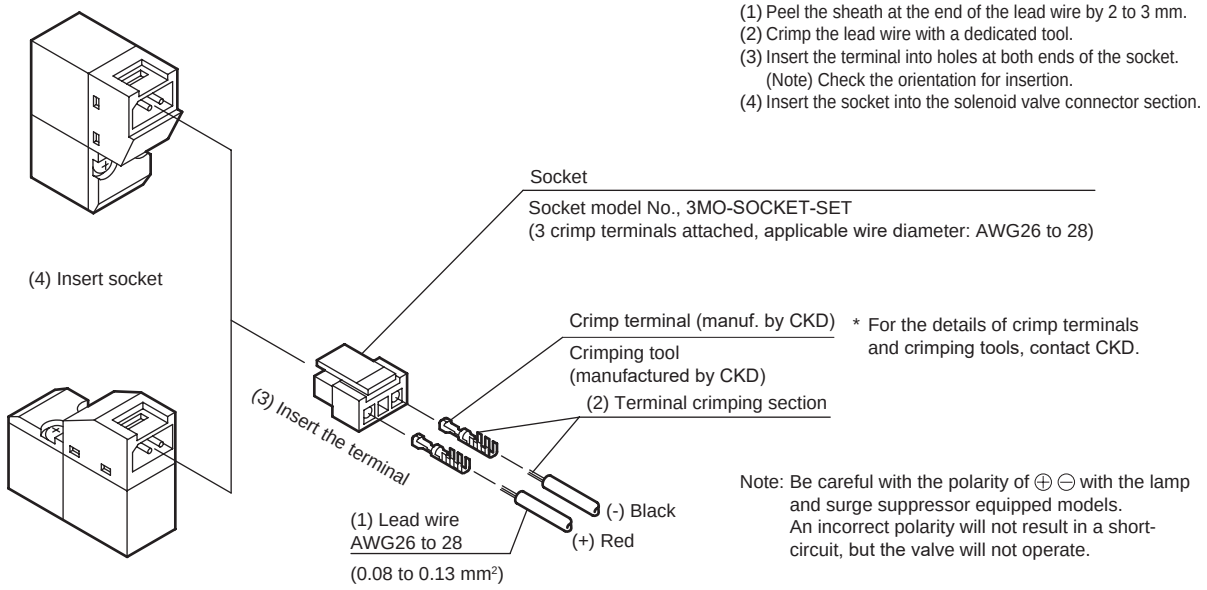

Note: Be careful with the polarity of ⊕ ⊖ with the lamp and surge suppressor equipped models. An incorrect polarity will not result in a short-circuit, but the valve will not operate.

How to order masking plate (gasket/mounting screws attached)

● Body piping

M3MA010 - MP - KIT

● Sub-plate piping

M3MB010 - MP - KIT

Pneumatic components

Safety Precautions

Be sure to read this section before use.
Refer to Intro Page 59 for general precautions for using valves.

Product-specific cautions: Direct acting 3-port valve 3MA0/3MB0 Series

Design/selection

1. Surge suppressor

■ The surge suppressor attached with the solenoid valve is intended to protect the output contacts for the solenoid valve drive. There is no significant protection for the other peripheral devices, and devices could be damaged or could malfunction due to a surge. As well, surges generated by other devices may be absorbed and cause damage such as burning. Note the following points.

⚠CAUTION

● If another device or solenoid valve is connected in parallel to the solenoid valve, the inverse voltage surge generated when the valve is OFF would apply to those devices. Even in the case of a solenoid valve with 24 VDC surge suppressor, a surge voltage may reach negative tens of volts for some models. This inverse voltage may cause damage or malfunction to other components connected in parallel. Avoid parallel connection of devices susceptible to inverse polarity voltages, e.g., LED indicators.
When driving several solenoid valves in parallel, the surge from other solenoid valves may enter the surge suppressor of one solenoid valve, and it may burn depending on the current value.
When driving several solenoid valves with surge suppressors in parallel, surge current could concentrate at the surge suppressor with the lowest limit voltage and cause similar burning. Due to the variations in surge suppressor limit voltage that exist even among solenoid valves of the same model No., in the worst case the surge suppressor may burn out. Avoid driving several solenoid valves in parallel.

● The surge suppressor incorporated in the solenoid valve will often be short-circuited if it is damaged by overvoltage or overcurrent from other solenoid valves. Where there is a failed surge suppressor, if a large current flows when the output is ON, in the worst case scenario, the output circuit or solenoid valve could be damaged or ignited. Do not continue energizing in a state of failure.
Additionally, to prevent large currents from continuing to flow, connect an overcurrent protection circuit to the power supply and drive circuit, or use a power supply with overcurrent protection.

Use/maintenance

1. Common

⚠CAUTION

■ Continuous energizing for long periods may accelerate degradation of the solenoid valve. Furthermore, use caution under the following working conditions, as with continuous energization:
- When energized time exceeds non-energized time in intermittent energizing
- When one energizing session exceeds 30 minutes in intermittent energizing

Consider heat dissipation when installing the product.
Contact CKD when energizing this device continuously.

3PA/3PB

Pneumatic valve

Direct acting 3-port valve

Overview

The 3P$^{A}_{B}$ series valves are direct acting universal pressurized 3-port valves usable with a working pressure of 0.7 MPa to low vacuum. Contributes to the construction of systems for low pressure/vacuum.
Suitable for operating cylinders of ø16 to ø40

Features

Space saving
Compact design with a valve width of 15 to 22 mm.
Contributes to reduction of the size of devices, etc., being assembled.

Large flow rate
The pressure balance poppet valve structure enables a large flow rate with a compact body.

Weight of equipment reduced
Aluminum and resin used in core areas.
Contributes to reduction of the weight of devices being assembled.

Easy maintenance
The direction of piping, wiring, and manual override is the same.
Maintenance is easy.

Energy saving
A 1.8 W low energy consumption design that realizes direct connections with electronic control and enables direct drive of the PLC.

Selectable electrical connections
Series are available for lead wire, terminal box, C-connectors, and D-connectors.
Combinations with lamp and surge suppressor are also available.

Resource saving
Can be used with no lubrication.

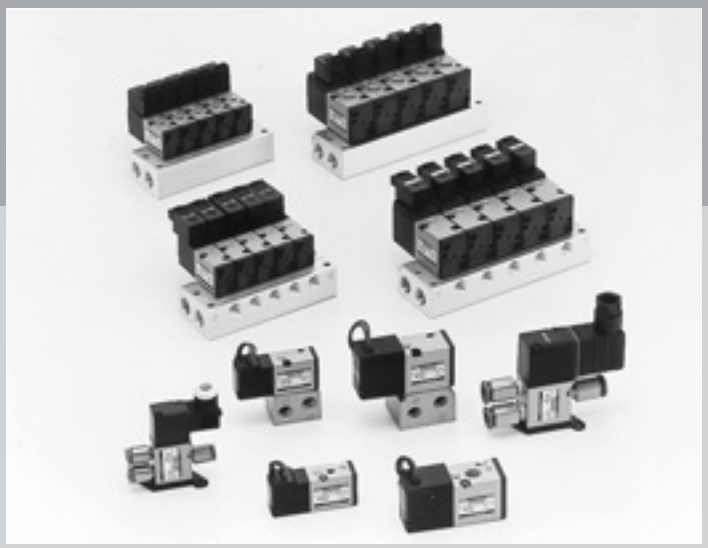

CONTENTS

Series variation	1608
Electrical connections list (wire connections/circuit)	1609
Discrete valve	
● Body piping (3PA1/2)	1612
● Sub-plate piping (3PB1/2)	1612
Individual wiring manifold	
● Body piping (M3PA1/2)	1620
● Sub-plate piping (M3PB1/2)	1620
Technical data	
(1) Terminal box wiring/connector connection method	1630
⚠ Safety precautions	1632

Piping method/series appearance			Model No.		Position Number of solenoid valves JIS symbol	Valve performance: Flow characteristics C [$dm^3/(s \cdot bar)$] *1	Valve performance: Applicable cylinder bore size	Voltage (V)	Switching position: 2-position single	Switching position: Mix manifold
Single unit	Body piping	3PA1 3PA2 	3-port	3PA1	● Universal 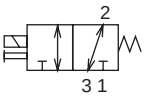 * Port numbers 1, 2, and 3 are Port 1: P, NC Port 2: A, COM Port 3: R, NO	0.34 to 0.38	ø16 to ø40	100 AC 200 AC 24 DC Option 110 AC 220 AC 12 DC	●	
				3PA2		0.98 to 1.1			●	
	Sub-plate piping	3PB1 3PB2 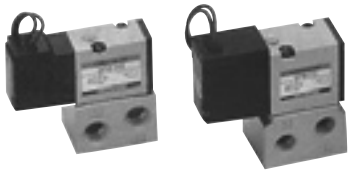		3PB1		0.33 to 0.42			●	
				3PB2		0.90 to 1.0			●	
Individual wiring manifold	Body piping	M3PA* 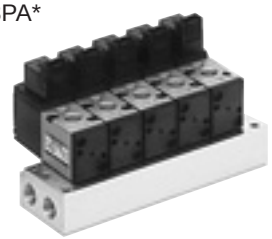	3-port	M3PA1		0.37 to 0.47	ø16 to ø40	100 AC 200 AC 24 DC Option 110 AC 220 AC 12 DC	●	●
				M3PA2		0.93 to 1.1			●	●
	Sub-plate piping	M3PB* 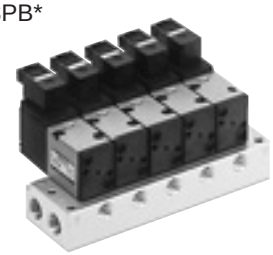		M3PB1		0.31 to 0.36			●	●
				M3PB2		0.86 to 0.94			●	●

*1: Effective cross-sectional area S and sonic conductance C are converted as S ≈ 5.0 x C.

A port size							Electrical connections				Page
Female thread			Push-in fitting								
M5	Rc1/8	Rc1/4	ø4	ø6	ø8		Grommet lead wire	Compact terminal box	C-connector	D-connector	
●			●	●			●	●	●	●	1612
	●			●	●		●	●	●	●	
	●						●	●	●	●	1612
	●	●					●	●	●	●	
●			●	●			●	●	●	●	1620
	●			●	●		●	●	●	●	
	●		●	●			●	●	●	●	1620
	●			●	●		●	●	●	●	

Electrical connections

Blank Grommet lead wire

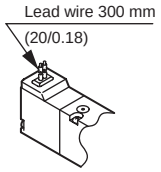

B Compact terminal box

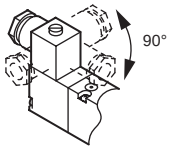

L Compact terminal box lamp

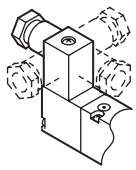

LS Compact terminal box, with surge suppressor/ lamp

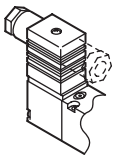

C C-connector lead wire

● Lead wire length

C : 300 mm
C00 : 500 mm
C01 : 1000 mm
C02 : 2000 mm
C03 : 3000 mm

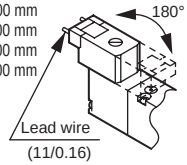

C1 C-connector without lead wire

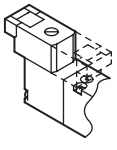

C2 C-connector with lead wire with surge suppressor/lamp

● Lead wire length

C2 : 300 mm
C20 : 500 mm
C21 : 1000 mm
C22 : 2000 mm
C23 : 3000 mm

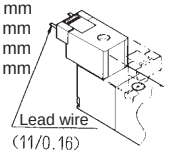

C3 C-connector without lead wire with surge suppressor and indicator lamp

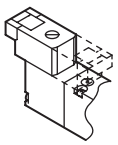

D D-connector lead wire

● Lead wire length

D : 300 mm
D00 : 500 mm
D01 : 1000 mm
D02 : 2000 mm
D03 : 3000 mm

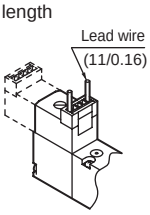

D1 D-connector without lead wire

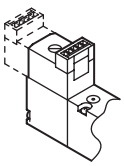

D2 D-connector lead wire with surge suppressor and indicator lamp

● Lead wire length

D2 : 300 mm
D20 : 500 mm
D21 : 1000 mm
D22 2000 mm
D23 : 3000 mm

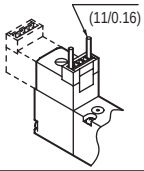

D3 D-connector without lead wire with surge suppressor and indicator lamp

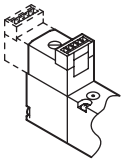

Manual override

Blank Non-locking

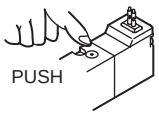

This will operate while the switch is being pressed.

M1 Locking

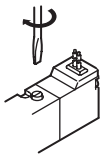

The unit will operate at approximately 90° in the ON direction.
Note that normally this should be returned to OFF.

Others/options

S Surge suppressor attached

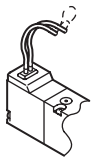

DC (grommet lead wire)

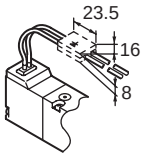

Suppression connector

P With mounting plate

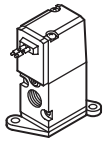

* Refer to the following page for electric connection circuit diagrams.

Electric connection circuit diagram

Voltage type	Option	Wiring circuit	Wiring method
AC	-	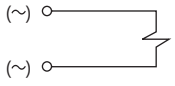	Grommet lead wire Terminal box (B) C-connector (C/C0*/C1) D-connector (D/D0*/D1)
	With indicator lamp	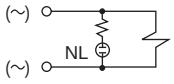	Terminal box (L)
	With surge suppressor and indicator lamp	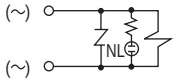	Terminal box (LS) C-connector (C2/C2*/C3) D-connector (D2/D2*/D3)
	Surge suppressor attached (Option)	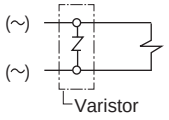	Surge suppressor attached (S)
DC	-	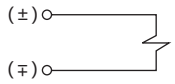	Grommet lead wire Terminal box (B) C-connector (C/C0*/C1) D-connector (D/D0*/D1)
	With indicator lamp	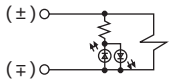	Terminal box (L) However, 3PA1/3PB1 are equipped with a surge suppressor and lamp.
	Surge suppressor/ with indicator lamp	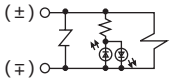	Terminal box (LS) C-connector (C2/C2*/C3) D-connector (D2/D2*/D3)
	Surge suppressor attached (Option)	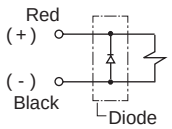 Diode has polarity.	Grommet lead wire (The option code "S" will be attached with surge suppressor.)
		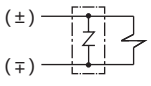 Varistor * Varistor has no polarity.	Surge suppressor attached (S)

MEMO



Discrete valve; body piping/sub-plate piping
Direct acting 3-port pneumatic valve

3PA/3PB Series

● Cylinder bore size: ø16 to ø40

CE Refer to the Ending for details.

RoHS CAD

JIS symbol

● 2-port/universal

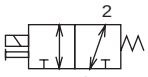

Port numbers 1, 2, and 3 are
Port 1: P, NC
Port 2: A, COM
Port 3: R, NO

Common specifications

1 MPa = 10 bar

Item	Description
Valve and operation	Direct acting poppet valve
Working fluid	Compressed air, low vacuum
Max. working pressure MPa	0.70 (≈100 psi, 7 bar)
Min. working pressure KPa	-100 (≈-15 psi, -1 bar)
Proof pressure MPa	1.05 (≈150 psi) (low vacuum: -101 KPa (≈-15 psi))
Max. working pressure differential MPa	0.70 (≈100 psi, 7 bar)
Ambient temperature °C	-5 (23°F) to 50 (122°F) (no freezing)
Fluid temperature °C	5 (41°F) to 50 (122°F)
Lubrication	Not required
Degree of protection	Dust-proof
Vibration resistance m/s^2	50 or less
Shock resistance m/s^2	300 or less
Atmosphere	Cannot be used in corrosive gas environment.

Electrical specifications

Item			3PA1 3PB1	3PA2 3PB2
Rated voltage V	AC		100, 200 (50/60 Hz)	
	DC		24	
Voltage fluctuation range			±10%	
Starting current A	AC	100 V	0.032 / 0.027	0.068 /0.054
	AC	200 V	0.016 / 0.014	0.034 / 0.027
	DC	24 V	-	-
Holding current A	AC	100 V	0.028 / 0.022	0.041 / 0.032
	AC	200 V	0.014 / 0.011	0.021 / 0.016
	DC	24 V	0.075	0.075
Power consumption W (With indicator lamp)	AC	100 V	1.8 / 1.4 (2.0 / 1.6)	2.2 / 1.8 (2.4 / 2.0)
	AC	200 V	1.8 / 1.4 (2.0 / 1.6)	2.2 / 1.8 (2.4 / 2.0)
	DC	24 V	1.8 (2.0)	1.8 (2.0)
Thermal class			B (molded coil)	
Temperature rise °C			30 (86°F)	

Reference: 100 VAC 50/60 Hz can be used with a rated voltage of 110 VAC 60 Hz and 200 VAC 50/60 Hz can be used with 220 VAC 60 Hz.

Individual specifications

Item	3PA1	3PA2	3PB1	3PB2
Port size *1	M5 (ø4, ø6 Push-in fitting)	Rc1/8 (ø6, ø8 Push-in fitting)	Rc1/8	Rc1/8, 1/4

*1: ( ) shows options. As G and NPT threads can also be used for piping port screws, contact CKD for details.

Performance/characteristics by model

Item	3PA1	3PA2	3PB1	3PB2
Response time *2 ms	20 or less	20 or less	20 or less	20 or less

*2: The response time is the value at 0.5 MPa supply pressure, with no lubrication, and with the power ON. It depends on the pressure and the lubricant quality.

Weight

Item	3PA1	3PA2	3PB1	3PB2
Weight g	54	127	84	175

Flow characteristics

Model No.	Port 1→2		Port 2→1		Port 2→3		Port 3→2	
	C[dm^3/(s·bar)]	b	C[dm^3/(s·bar)]	b	C[dm^3/(s·bar)]	b	C[dm^3/(s·bar)]	b
3PA1	0.34	0.29	0.35	0.42	0.38	0.43	0.35	0.32
3PA2	0.98	0.17	1.0	0.34	1.1	0.28	1.0	0.20
3PB1	0.37	0.05	0.33	0.21	0.41	0.28	0.42	0.08
3PB2	0.90	0.19	0.97	0.39	1.0	0.26	0.94	0.27

*1: Effective cross-sectional area S and sonic conductance C are converted as S ≈ 5.0 x C.

How to order single valve

● Body piping

3PA1 1 0 - M5 - M1 LS ◯ - 3

● Sub-plate piping

3PB2 1 0 - 08 - M1 LS ◯ - 3

● Solenoid valve for manifold (sub-plate piping)

3PB1 1 9 - 00 - M1 B ◯ - 3 * Gasket/ mounting screw attached

Ⓐ Model No.
Solenoid position
2 position single

Ⓑ Port size

Ⓒ Manual override

Ⓓ Electrical connections

* For the circuit diagram with surge suppressor/lamp refer to page 1610.
*4

Ⓔ Other options

Ⓕ Voltage

[Table 1] Compact terminal box L/LS compatibility table

Code	Description			3PA1	3PA2	3PB1	3PB2	Surge suppressor
L	Without lead wire	With indicator lamp	AC	●	●	●	●	
			DC		●		●	
		With surge suppressor/ indicator lamp	AC					
			DC	●		●		Integrated
LS	Without lead wire	With surge suppressor/ indicator lamp	AC	●	●	●	●	Integrated
			DC		●		●	Integrated

⚠ Precautions for model No. selection

*1 : For GS4, screw push-in fitting GWS4-M5-S into the 1, 2, and 3 ports.
*2 : For GS6, screw push-in fitting GWS6-M5-S (3PA1)/GWJS6-6 (3PA2) into the 1, 2, and 3 ports.
*3 : For GS8, screw push-in fitting GWS8-6 into the 1, 2, and 3 ports.
*4 : The lead wire used is AWG 20 to 24 size.
*5 : The surge suppressor for attachment is a suppression connector when the grommet lead wire is 24 VDC or less. (Refer to page 1609.)
*6 : The surge suppressor can only be selected when the grommet lead wire or compact terminal box "B" has been selected for the electrical connections.

[Example of model No.]

3PA210-06-M1BP-3

Ⓐ Model: 3PA2 (body piping)
Solenoid position : 2-position single
Ⓑ Port size : Rc1/8
Ⓒ Manual override : Locking manual override
Ⓓ Electrical connections: Terminal box
Ⓔ Other options : With mounting plate
Ⓕ Voltage : 24 VDC

Ozone-proof specifications (Ending Page 5)

Conforms to low-concentration ozone specifications as standard.

CE marking specifications

** - Voltage - **ST**

・Standard voltage of 24 VDC or less is CE marking-compatible even if the model No. is not indicated with "ST".

	Code		Description	Ⓐ Model No. Body piping 3PA1	Body piping 3PA2	Sub-plate piping 3PB1	Sub-plate piping 3PB2
Ⓑ Port size	M5		M 5	●			
	06		Rc 1/8		●	●	●
	08		Rc 1/4				●
	GS4		ø4 push-in fitting *1	●			
	GS6		ø6 push-in fitting *2	●	●		
	GS8		ø8 push-in fitting *3		●		
Ⓒ	Blank		Manual override of non-locking	●	●	●	●
	M1		Locking manual override	●	●	●	●
Ⓓ Electrical connections	Grommet lead wire						
	Blank		Grommet lead wire (300 mm)	●	●	●	●
	Compact terminal box						
	B		Without lead wire	●	●	●	●
	L		Without lead wire	Refer to [Table 1] at left for details.			
	LS		No lead wire, with surge suppressor/lamp				
	C-connector (lead wire lateral direction)						
	C		Lead wire (300 mm)	●	●	●	●
	C00		Lead wire (500 mm)	●	●	●	●
	C01		Lead wire (1000 mm)	●	●	●	●
	C02		Lead wire (2000 mm)	●	●	●	●
	C03		Lead wire (3000 mm)	●	●	●	●
	C1		Without lead wire	●	●	●	●
	C2		Lead wire (300 mm), surge suppressor/indicator lamp	●	●	●	●
	C20		Lead wire (500 mm), surge suppressor/indicator lamp	●	●	●	●
	C21		Lead wire (1000 mm), surge suppressor/indicator lamp	●	●	●	●
	C22		Lead wire (2000 mm), surge suppressor/indicator lamp	●	●	●	●
	C23		Lead wire (3000 mm), surge suppressor/indicator lamp	●	●	●	●
	C3		Lead/no lead wire, surge suppressor/indicator lamp	●	●	●	●
	D-connector (lead wire upward direction)						
	D		Lead wire (300 mm)	●	●	●	●
	D00		Lead wire (500 mm)	●	●	●	●
	D01		Lead wire (1000 mm)	●	●	●	●
	D02		Lead wire (2000 mm)	●	●	●	●
	D03		Lead wire (3000 mm)	●	●	●	●
	D1		Without lead wire	●	●	●	●
	D2		Lead wire (300 mm), surge suppressor/indicator lamp	●	●	●	●
	D20		Lead wire (500 mm), surge suppressor/indicator lamp	●	●	●	●
	D21		Lead wire (1000 mm), surge suppressor/indicator lamp	●	●	●	●
	D22		Lead wire (2000 mm), surge suppressor/indicator lamp	●	●	●	●
	D23		Lead wire (3000 mm), surge suppressor/indicator lamp	●	●	●	●
	D3		No lead wire, with surge suppressor/indicator lamp	●	●	●	●
Ⓔ	Blank		Without mounting plate	●	●		
	P		With mounting plate	●	●		
	S		Surge suppressor included *5*6	●	●	●	●
Ⓕ Voltage	1	Standard	AC100V 50 / 60Hz	●	●	●	●
	2		AC200V 50 / 60Hz	●	●	●	●
	3		24 VDC	●	●	●	●
	110 VAC	Option	AC110V 50 / 60Hz	●	●	●	●
	220 VAC		AC220V 50 / 60Hz	●	●	●	●
	4		12 VDC	●	●	●	●
*** Other custom order products**							
AC24V				●	●	●	●
AC115V				●	●	●	●
AC120V				●	●	●	●

Internal structure and parts list

3PA110

● 2-position single

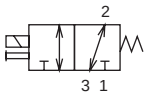

* Port numbers 1, 2, and 3 are
Port 1: P, NC
Port 2: A, COM
Port 3: R, NO

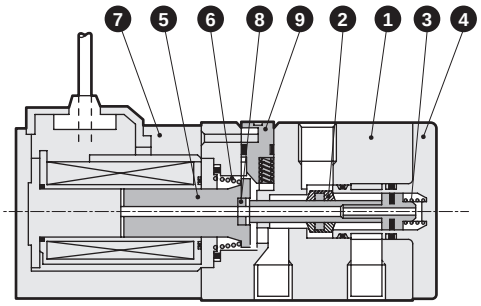

3PA210

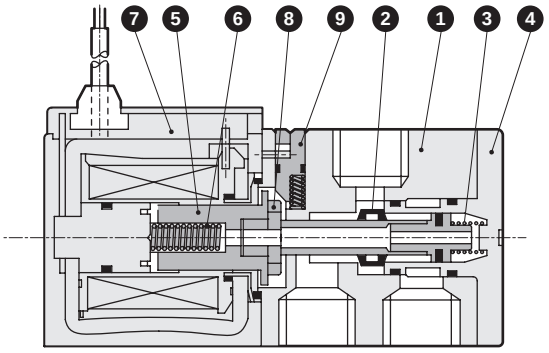

Main parts list

No.	Part name	Material
1	Body	Aluminum alloy die-casting
2	Valving element (stem assembly)	-
3	Valve spring	Stainless steel
4	Cap	Resin
5	Plunger	Stainless steel
6	Plunger spring	Stainless steel
7	Coil assembly	-
8	Knock	Resin
9	Manual button	Resin

Repair parts list

No./part name / Model No.	5 6 7 8 Coil assembly *
3PA110	3P1 - electrical connections - COIL - voltage └ Blank for grommet lead wire
3PA210	3P2 - electrical connections - COIL - voltage └ Blank for grommet lead wire

* 1: The plunger assembly is attached with the coil assembly. As there are limitations with the combinations of coils and plungers, do not replace these.
* 2: The compact terminal box and connector of the coil assembly will come assembled and attached with the options indicated with How to order.
* 3: When combining a coil assembly into a valve, contact CKD for precautions regarding the work.

Operational principle

3P Series structure is a pressure balanced type poppet valve, which is not affected by the working pressure and achieves a low wattage large flow rate performance. Port can be pressurized from any of ports 1, 2, or 3. The stem assembly valve seat and packing have the same diameter, so each port pressure differential is canceled by the stem assembly's through hole and pressure is balanced at both ON and OFF.

● When not energized

The stem assembly is pushed toward port 1 side by the plunger spring force transmitted by the plunger.

Port 1 is closed due to the stem assembly valve seat and packing. Ports 2 and 3 are opened.

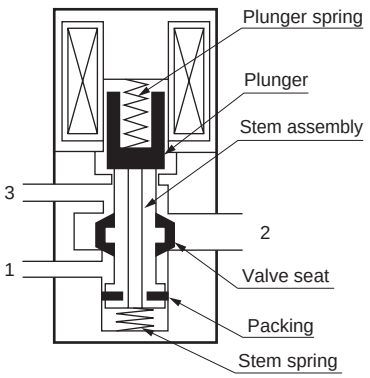

Internal structure and parts list

3PB110

● 2-position single

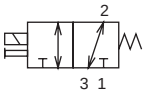

* Port numbers 1, 2 and 3 are
Port 1: P, NC
Port 2: A, COM
Port 3: R, NO

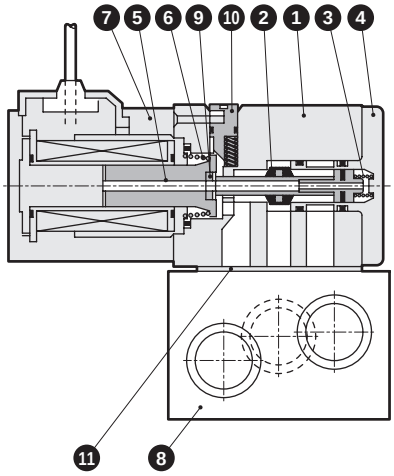

3PB210

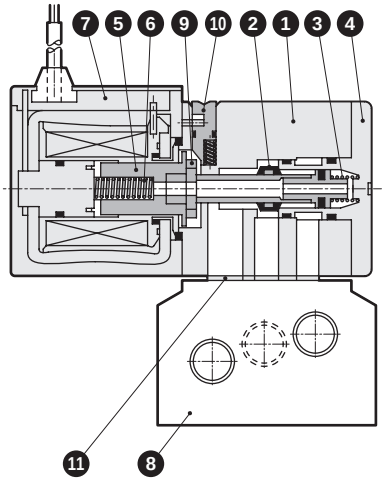

Main parts list

No.	Part name	Material
1	Body	Aluminum alloy die-casting
2	Valving element (stem assembly)	-
3	Valve spring	Stainless steel
4	Cap	Resin
5	Plunger	Stainless steel
6	Plunger spring	Stainless steel
7	Coil assembly	-
8	Sub-plate	Aluminum alloy die-casting
9	Knock	Resin
10	Manual button	Resin
11	Gasket	Nitrile rubber

Repair parts list

No./part name / Model No.	5 6 7 9 Coil assembly *
3PB110	3P1 - electrical connections - COIL - voltage └ Blank for grommet lead wire
3PB210	3P2 - electrical connections - COIL - voltage └ Blank for grommet lead wire

* 1: The plunger assembly is attached with the coil assembly. As there are limitations with the combinations of coils and plungers, do not replace these.
* 2: The compact terminal box and connector of the coil assembly will come assembled and attached with the options indicated with How to order.
* 3: When combining a coil assembly into a valve, contact CKD for precautions regarding the work.

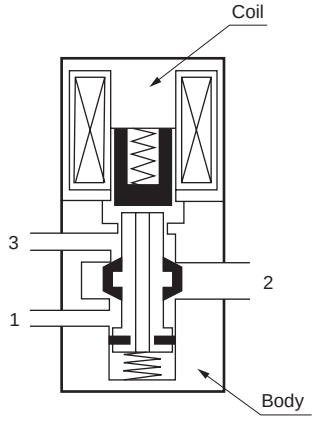

● When energized

When the coil is energized, the plunger is suctioned to the coil side, the stem assembly is actuated by the stem spring, and ports 1 and 2 open. Port 3 is closed.

Dimensions CAD

3PA110-M5

● 2-position single: grommet lead wire

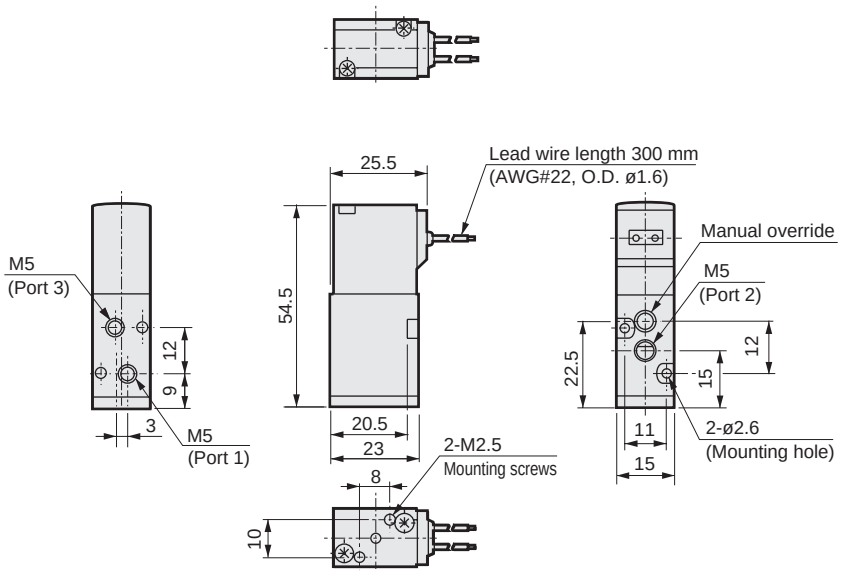

● With mounting plate: (P)

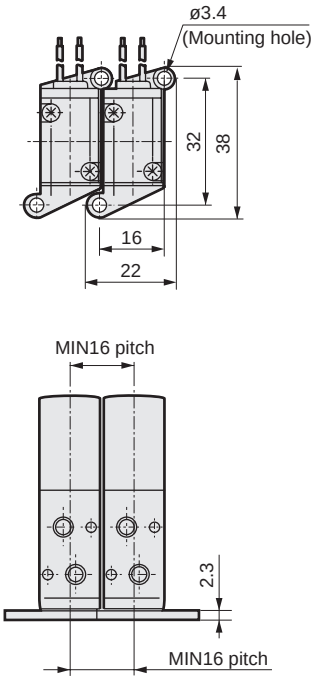

3PA210-06

● 2-position single: grommet lead wire

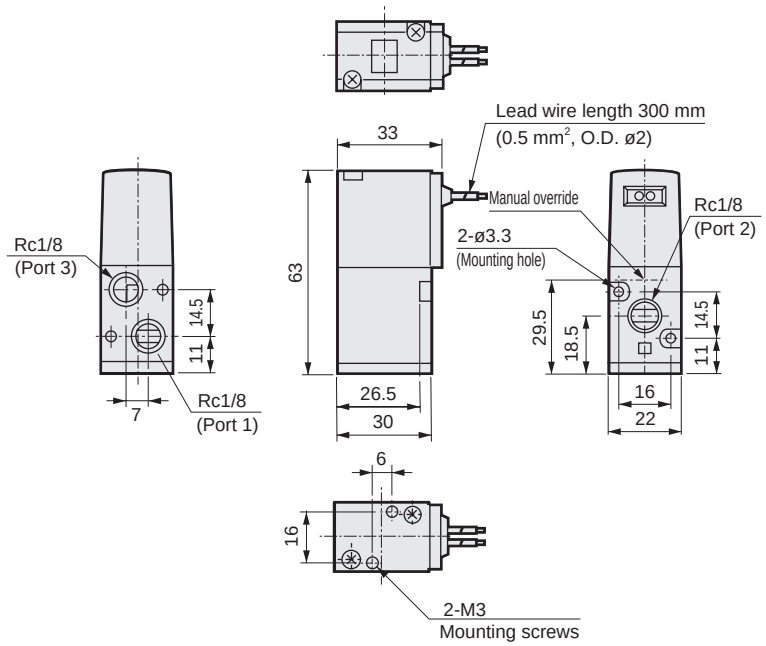

● With mounting plate: (P)

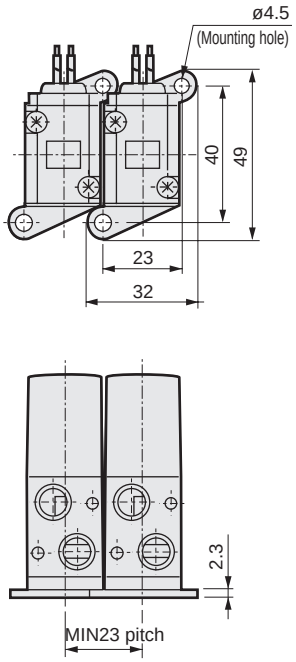

Dimensions

For 3PA1

● ø4, ø6 push-in fitting: (GS4/GS6)

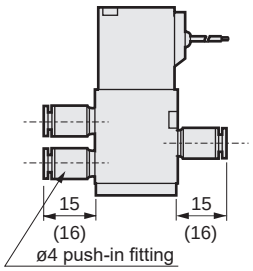

● Terminal box: (B)

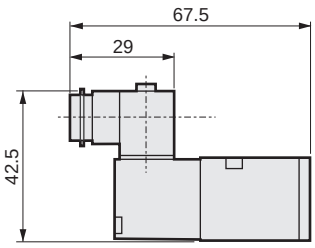

● Terminal box with lamp: (L/LS)

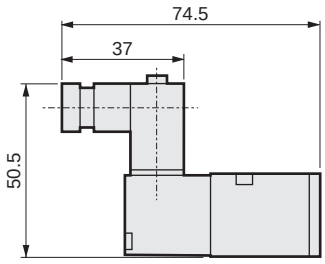

● C-connector: (C/C0*/C1/C2*/C3)

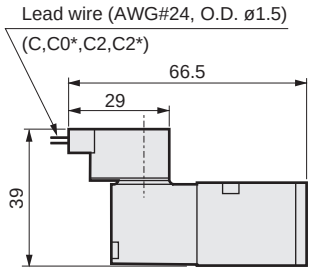

● D-connector: (D/D0*/D1/D2*/D3)

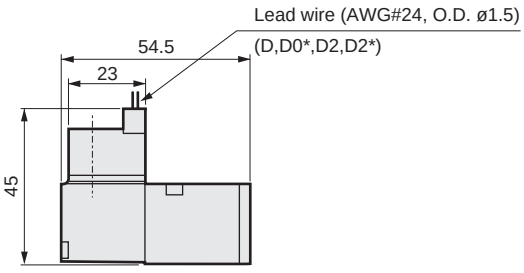

● Locking manual override: (M1)

For 3PA2

● ø6, ø8 push-in fitting: (GS6/GS8)

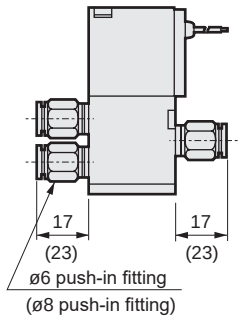

● Terminal box: (B/L/LS)

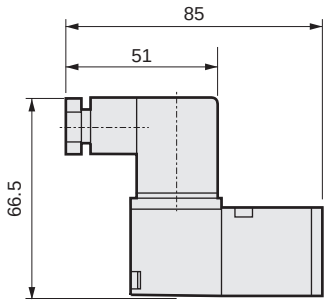

● C-connector: (C/C0*/C1/C2*/C3)

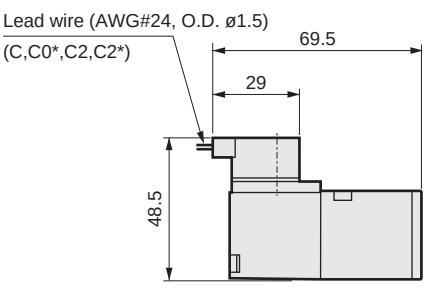

● D-connector: (D/D0*/D1/D2*/D3)

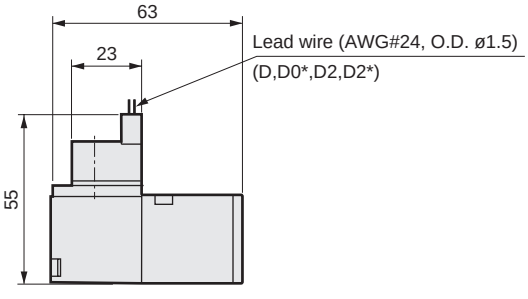

● Locking manual override: (M1)

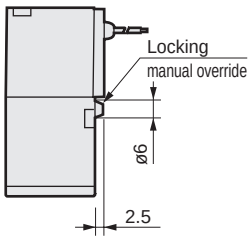

Dimensions CAD

3PB110-06

● 2-position single: grommet lead wire

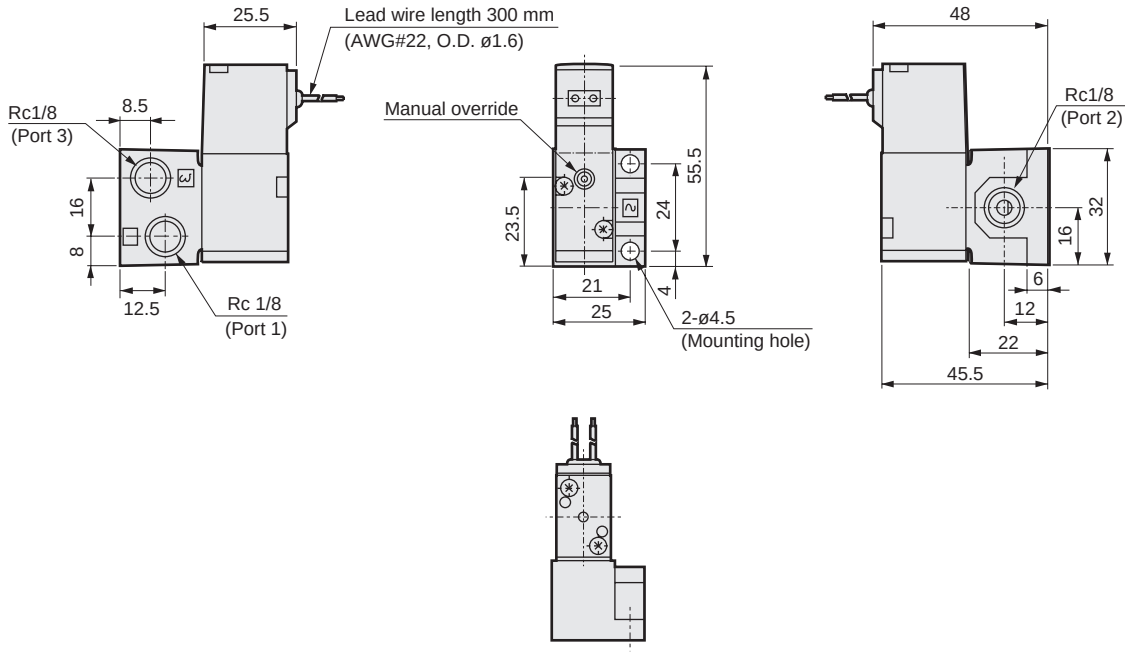

3PB210-06
08

● 2-position single: grommet lead wire

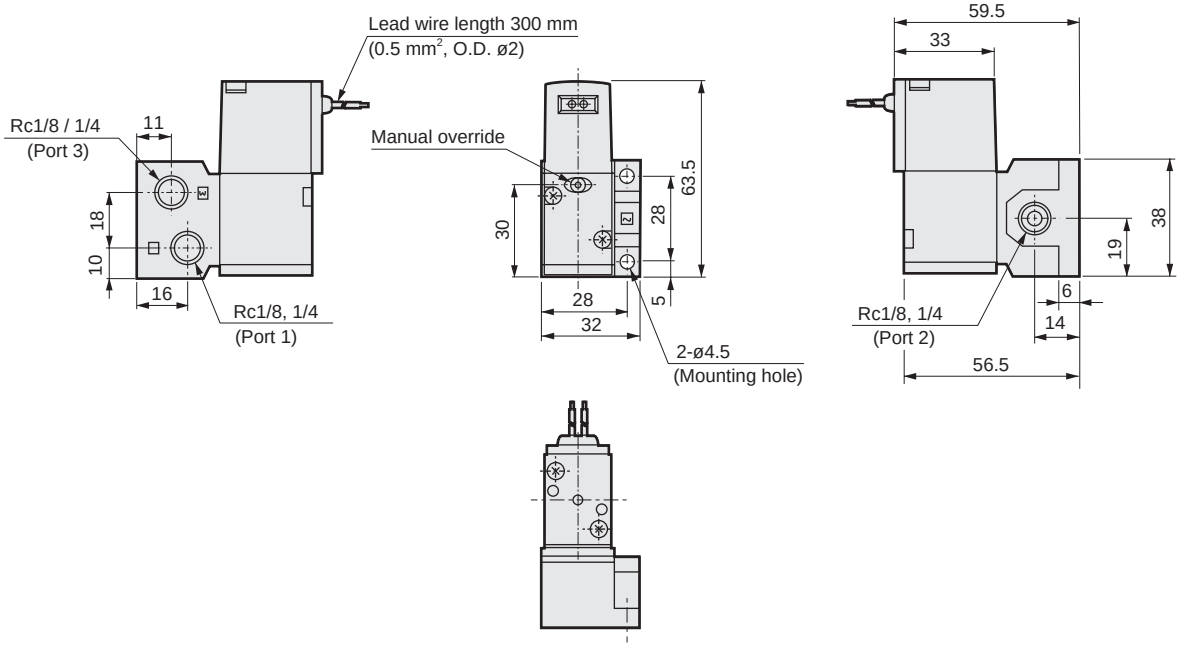

Dimensions

For 3PB1

● Terminal box: (B)

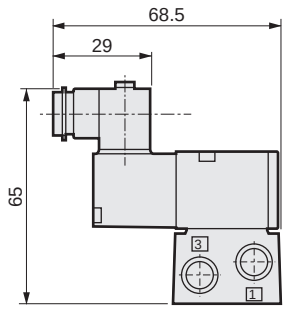

● Terminal box with lamp: (L/LS)

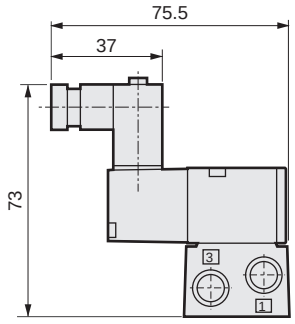

● C-connector: (C/C0*/C1/C2*/C3)

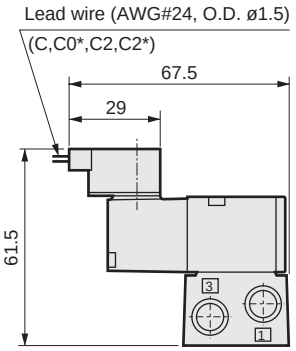

● D-connector: (D/D0*/D1/D2*/D3)

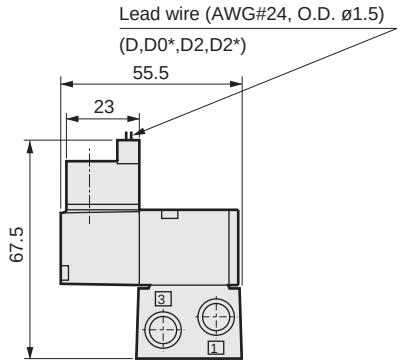

● Locking manual override: (M1)

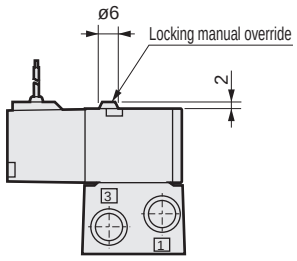

For 3PB2

● Terminal box: (B/L/LS)

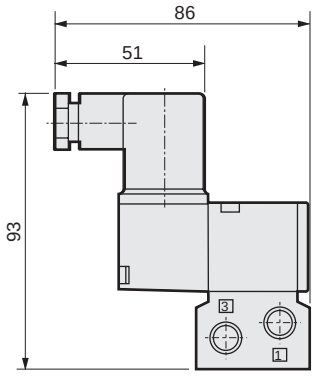

● C-connector: (C/C0*/C1/C2*/C3)

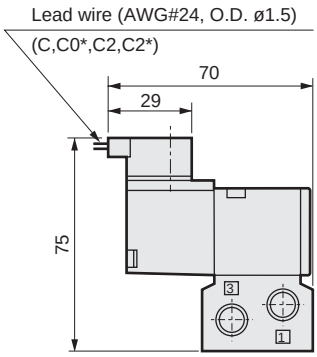

● D-connector: (D/D0*/D1/D2*/D3)

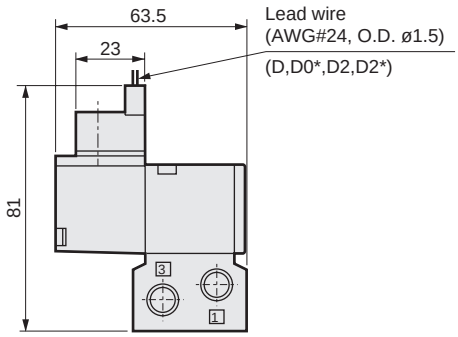

● Locking manual override: (M1)

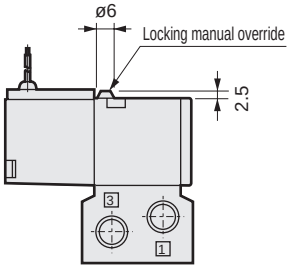

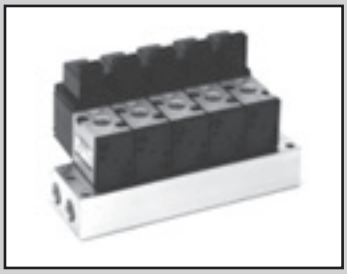

Individual wiring manifold body piping / sub-plate piping
Direct acting 3-port pneumatic valve

M3PA, M3PB Series

● Cylinder bore size: ø16 to ø40

Refer to the Ending for details.

RoHS CAD

JIS symbol

● 2-port/universal

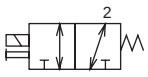

Port numbers 1, 2, and 3 are
Port 1: P, NC
Port 2: A, COM
Port 3: R, NO
.

Common specifications

1 MPa = 10 bar

Item	Description
Manifold method	Sub-plate integrated
Station No.	2 to 20 stations
Valve and operation	Direct acting poppet valve
Working fluid	Compressed air, low vacuum
Max. working pressure MPa	0.70
Min. working pressure KPa	-100
Proof pressure MPa	1.05 (low vacuum: -101 kPa)
Max. working Press Diff. (MPa)	0.70
Ambient temperature °C	-5 to 50 (no freezing)
Fluid temperature °C	5 to 50
Lubrication	Not required
Degree of protection	Dust-proof
Vibration resistance m/s^2	50 or less
Shock resistance m/s^2	300 or less
Atmosphere	Cannot be used in corrosive gas environment.

Electrical specifications

Item			3PA1 3PB1	3PA2 3PB2
Rated voltage V	AC		100, 200 (50 / 60 Hz)	
	DC		24	
Voltage fluctuation range			±10%	
Starting current A	AC	100 V	0.032 / 0.027	0.068 / 0.054
	AC	200 V	0.016 / 0.014	0.034 / 0.027
	DC	24 V	-	-
Holding current A	AC	100 V	0.028 / 0.022	0.041 / 0.032
	AC	200 V	0.014 / 0.011	0.021 / 0.016
	DC	24 V	0.075	0.075
Power consumption W (With indicator lamp)	AC	100 V	1.8 / 1.4 (2.0 / 1.6)	2.2 / 1.8 (2.4 / 2.0)
	AC	200 V	1.8 / 1.4 (2.0 / 1.6)	2.2 / 1.8 (2.4 / 2.0)
	DC	24 V	1.8 (2.0)	1.8 (2.0)
Thermal class			B (molded coil)	
Temperature rise °C			30	

Reference: 100 VAC 50/60 Hz can be used with a rated voltage of 110 VAC 60 Hz and 200 VAC 50/60 Hz can be used with 220 VAC 60 Hz.

Individual specifications

Item		M3PA1	M3PA2	M3PB1	M3PB2
Manifold		Port 2 : Individual Port 1/3: Common	Port 2 : Individual Port 1/3: Common	Port 2 : Individual Port 1/3: Common Port 2/3: Individual Port 1 : Common Port 1/2: Individual Port 3 : Common	Port 2 : Individual Port 1/3: Common Port 2/3: Individual Port 1 : Common Port 1/2: Individual Port 3 : Common
Port size *1	Port 1	Rc1/4	Rc1/4	Common: Rc1/4 Individual: Rc1/8	Common: Rc1/4 Individual: Rc1/8
	Port 2	M 5 (ø4, ø6 push-in fitting)	Rc1/8 (ø6, ø8 push-in fitting)	Rc1/8 (ø4, ø6 push-in fitting)	Rc1/8 (ø6, ø8 push-in fitting)
	Port 3	Rc 1/4	Rc 1/4	Common: Rc1/4 Individual: Rc1/8	Common: Rc1/4 Individual: Rc1/8

*1: As G and NPT threads can also be used for piping port screws, contact CKD for details.

Performance/characteristics by model

Item	M3PA1	M3PA2	M3PB1	M3PB2
Response time *2 ms	20 or less	20 or less	20 or less	20 or less

*2: The response time is the value at 0.5 MPa supply pressure, with no lubrication, and with the power ON. It depends on the pressure and the lubricant quality.

Weight

Item	M3PA1	M3PA2	M3PB1	M3PB2
Weight (n: station No.) g	104xn+48	184xn+46	102xn+48	182xn+45

Flow characteristics

Model No.	Port 1→2		Port 2→1		Port 2→3		Port 3→2	
	C[dm³/(s·bar)]	b	C[dm³/(s·bar)]	b	C[dm³/(s·bar)]	b	C[dm³/(s·bar)]	b
M3PA1	0.38	0.17	0.37	0.46	0.47	0.45	0.40	0.18
M3PA2	0.93	0.25	1.0	0.35	1.1	0.32	0.97	0.31
M3PB1	0.36	0.22	0.32	0.43	0.33	0.48	0.31	0.24
M3PB2	0.86	0.25	0.93	0.38	0.94	0.22	0.88	0.27

*1: Effective cross-sectional area S and sonic conductance C are converted as S ≈ 5.0 x C.

Ozone-proof specifications

(Ending Page 5)

Conforms to low-concentration ozone specifications as standard.

CE marking specifications

** - Voltage - **ST**

• Standard voltage of 24 VDC or less is CE marking-compatible even if the model No. is not indicated with "ST".

How to order individual wiring manifold

● Solenoid valve for manifold (body piping)

3PA1 1 9 - M5 - M1 B ( ) —— 3 * Gasket/mounting screw attached

● Solenoid valve for manifold (sub-plate piping)

3PB1 1 9 - 00 - M1 B ( ) —— 3 * Gasket/mounting screw attached

● Manifold

M 3PB1 1 0 - 06 - M1 B ( ) - 7 - 3 - 5 2

S1 MP

Indicate the valve function based quantity display position for when using a mix manifold. Refer to the following page.

Ⓐ Model No.

Ⓑ Solenoid position

Ⓒ Port size

* : The values of port size port 1/3 are,
(1) 1/3 = Rc1/4 common
(2) 1 = Rc1/4 common, 3 = Rc1/8 individual
(3) 1 = Rc1/8 individual, 3 = Rc1/4 common

Ⓔ Electrical connections
* For the circuit diagram with surge suppressor/lamp, refer to page 1610.
*4

● For how to order masking plates, refer to the next page.

Ⓓ Manual override

Ⓕ Other options

Ⓖ Station No.

Ⓗ Voltage

Ⓐ Model No.	Body piping		Sub-plate piping	
	3PA1	3PA2	3PB1	3PB2

	Code	Description				
Ⓑ	1	2-position single	●	●	●	●
	8	Mix manifold (for multiple solenoid positions)	●	●	●	●
Ⓒ Port size		Port 2 individual	Port 1/3			
	M5	M 5	(1)			
	06	Rc1/8		(1)	(1)	(1)
	GS4	ø4 push-in fitting *1	(1)		(1)	
	GS6	ø6 push-in fitting *2	(1)	(1)	(1)	(1)
	GS8	ø8 push-in fitting *3		(1)		(1)
	06Y	Rc1/8 (rear piping)			(1)	(1)
	06A	Rc1/8			(2)	(2)
	06B	Rc1/8			(3)	(3)
Ⓓ	Blank	Non-locking manual override	●	●	●	●
	M1	Locking manual override	●	●	●	●
Ⓔ Electrical connections		Grommet lead wire				
	Blank	Grommet lead wire (300 mm)	●	●	●	●
		Compact terminal box				
	B	Without lead wire	●	●	●	●
	L	Without lead wire	Refer to [Table 1] at left for details.			
	LS	No lead wire, with surge suppressor/lamp				
		C-connector (lead wire lateral direction)				
	C	Lead wire (300 mm)	●	●	●	●
	C00	Lead wire (500 mm)	●	●	●	●
	C01	Lead wire (1000 mm)	●	●	●	●
	C02	Lead wire (2000 mm)	●	●	●	●
	C03	Lead wire (3000 mm)	●	●	●	●
	C1	Without lead wire	●	●	●	●
	C2	Lead wire (300 mm), surge suppressor/indicator lamp	●	●	●	●
	C20	Lead wire (500 mm), surge suppressor/indicator lamp	●	●	●	●
	C21	Lead wire (1000 mm), surge suppressor/indicator lamp	●	●	●	●
	C22	Lead wire (2000 mm), surge suppressor/indicator lamp	●	●	●	●
	C23	Lead wire (3000 mm), surge suppressor/indicator lamp	●	●	●	●
	C3	No lead wire, with surge suppressor/indicator lamp	●	●	●	●
		D-connector (lead wire upward direction)				
	D	Lead wire (300 mm)	●	●	●	●
	D00	Lead wire (500 mm)	●	●	●	●
	D01	Lead wire (1000 mm)	●	●	●	●
	D02	Lead wire (2000 mm)	●	●	●	●
	D03	Lead wire (3000 mm)	●	●	●	●
	D1	Without lead wire	●	●	●	●
	D2	Lead wire (300 mm), surge suppressor/indicator lamp	●	●	●	●
	D20	Lead wire (500 mm), surge suppressor/indicator lamp	●	●	●	●
	D21	Lead wire (1000 mm), surge suppressor/indicator lamp	●	●	●	●
	D22	Lead wire (2000 mm), surge suppressor/indicator lamp	●	●	●	●
	D23	Lead wire (3000 mm), surge suppressor/indicator lamp	●	●	●	●
	D3	No lead wire, with surge suppressor/indicator lamp	●	●	●	●
Ⓕ	Blank	No option	●	●	●	●
	S	Surge suppressor attached *5, *6	●	●	●	●
Ⓖ Stn No.	2	2 stations	●	●	●	●
	to	to				
	20	20 stations				
Ⓗ Voltage	1	Standard 100 VAC(50/60 Hz)	●	●	●	●
	2	Standard 200 VAC(50/60 Hz)	●	●	●	●
	3	Standard DC 24 V	●	●	●	●
	AC110V	Option 110 VAC 50/60 Hz	●	●	●	●
	AC220V	Option 220 VAC 50/60 Hz	●	●	●	●
	4	Option DC 12 V	●	●	●	●
* Other custom order products						
AC24V			●	●	●	●
AC115V			●	●	●	●
AC120V			●	●	●	●

[Table 1] Compact terminal box L/LS compatibility table

Code	Description			3PA1	3PA2	3PB1	3PB2	Surge suppressor
L	Without lead wire	With indicator lamp	AC	●	●	●	●	
			DC		●		●	
		Surge suppressor, indicator lamp	AC					
			DC	●		●		Integrated
LS	Without lead wire	Surge suppressor, indicator lamp	AC	●	●	●	●	Integrated
			DC		●		●	Integrated

⚠ Precautions for model No. selection

*1 : For GS4, screw push-in fitting GWS4-M5-S (3PA1)/GWJS4-6 (3PB1) into the 2 port.
*2 : For GS6, screw push-in fitting GWS6-M5-S (3PA1)/GWJS6-6(3PA2)/GWJS6-6(3PB1) into the 2 port.
*3 : For GS8, screw push-in fitting GWS8-6(3PA2, 3PB2) into Port 2.
*4 : The lead wire size used is AWG20 to 24.
*5 : The surge suppressor for attachment is a suppression connector for 24 VDC or less. (Refer to page 1609.)
*6 : The surge suppressor can only be selected when the grommet lead wire or compact terminal box "B" has been selected for the electrical connections.

[Example of model No.]

M3PA210-06-S-7-1

Ⓐ Model: M3PA2 (body piping)
Ⓑ Solenoid position : 2-position single
Ⓒ Port size : Port 2 Rc1/8
Ⓓ Manual override : Non-locking manual override
Ⓔ Electrical connections: Grommet lead wire
Ⓕ Other options : Surge suppressor attached
Ⓖ Station No. : 7 stations
Ⓗ Voltage : 100 VAC

How to order masking plate kit

3PA1 - MP-KIT * Gasket/mounting screw attached

Ⓐ Model No.

Ⓐ Model No.
3PA1
3PB1
3PA2
3PB2

How to order mix manifold

M 3PB1 8 0 - 06 - M1 B ◯ - 7 - 3 - S1 MP **5 2**

Mix manifold “8”

S1 = 1 to 5, MP = 6 to 7

How to fill in form for ordering a mix manifold

(1) List the quantity for each function (solenoid position) at the end of How to order. The functions and codes are as shown below.

Example: 2-position single → S1

- S1 MP **5 2**

List the quantity

Code	Function (solenoid position)
S1	2-position single
MP	Masking plate

(2) List the function (solenoid position) and layout position in the field for remarks.

Solenoid position code = ◯, ◯th station (where the left side is the 1st station when the piping port is facing forward.)

Example: S1 = 1 to 5 (1st to 5th stations are 2-position single)

[Example of model No.]

For 7 stations

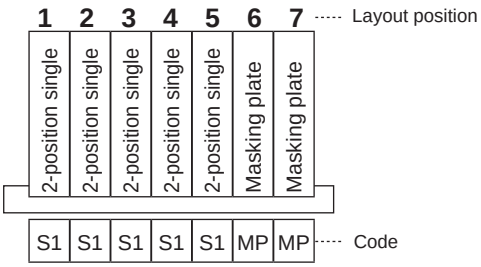

2-position single (S1) : 5 pcs (1st to 5th stations)
Masking plate : 2 pcs (6th, 7th stations)

M3PB180-06-M1-B-7-3 - S1 MP **5 2**

S1=1 to 5 MP=6 to 7

Dimensions CAD

M3PA180-M5

● Port 2 - individual piping, port 1/3 - common piping: grommet lead wire

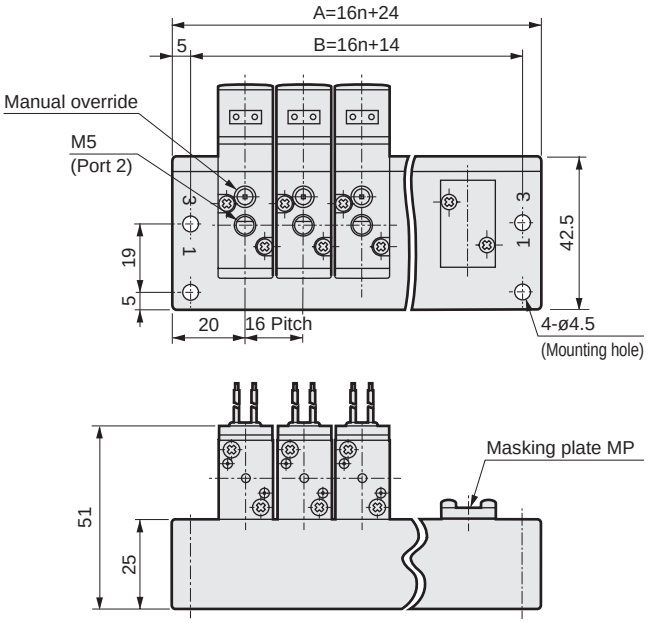

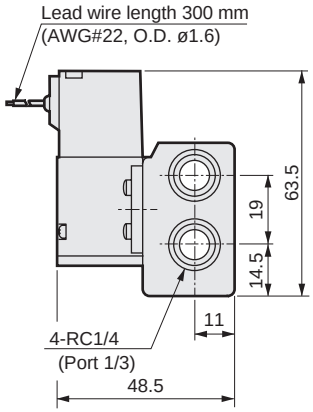

JIS symbol

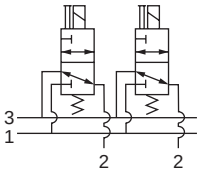

■ Model No. of single unit solenoid valve unit for manifold
3PA119-M5-option-voltage

Station No.	2	3	4	5	6	7	8	9	10	11	12	13	14	15	16	17	18	19	20
A	56	72	88	104	120	136	152	168	184	200	216	232	248	264	280	296	312	328	344
B	46	62	78	94	110	126	142	158	174	190	206	222	238	254	270	286	302	318	334

M3PA280-06

● Port 2 - individual piping, port 1/3 - common piping: grommet lead wire

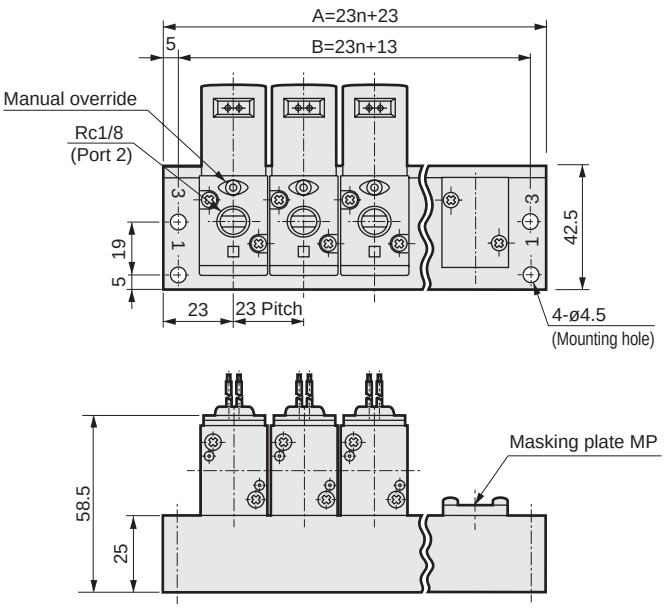

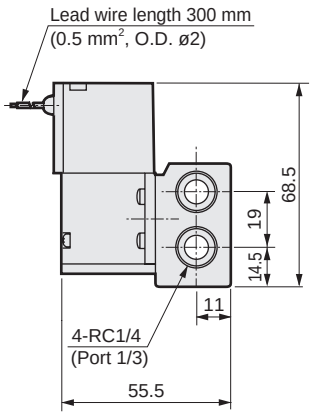

JIS symbol

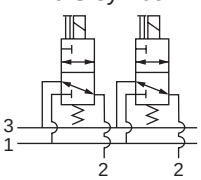

■ Model No. of single unit solenoid valve unit for manifold
3PA219-06-option-voltage

Station No.	2	3	4	5	6	7	8	9	10	11	12	13	14	15	16	17	18	19	20
A	69	92	115	138	161	184	207	230	253	276	299	322	345	368	391	414	437	460	483
B	59	82	105	128	151	174	197	220	243	266	289	312	335	358	381	404	427	450	473

Dimensions

For M3PA1

● ø4, ø6 push-in fitting: (GS4/GS6)

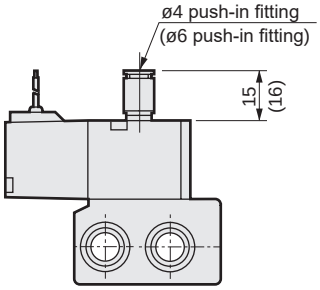

● Terminal box: (B)

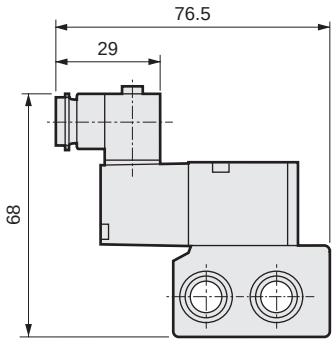

● Terminal box with lamp: (L/LS)

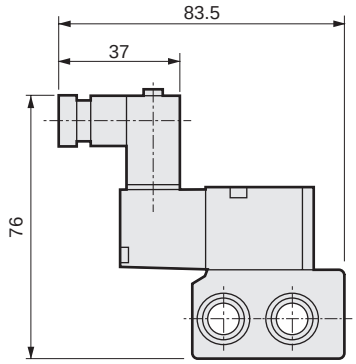

● C-connector: (C/C0*/C1/C2*/C3)

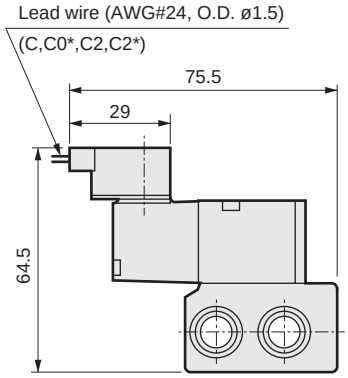

● D-connector: (D/D0*/D1/D2*/D3)

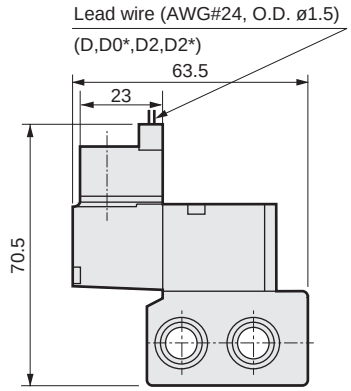

● Locking manual override: (M1)

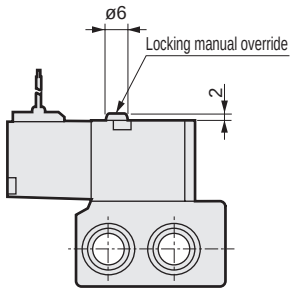

For M3PA2

● ø6, ø8 push-in fitting: (GS6/GS8)

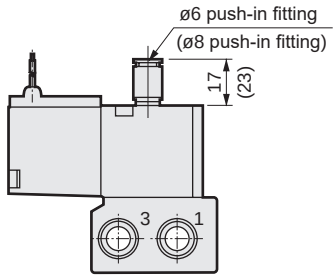

● Terminal box: (B/L/LS)

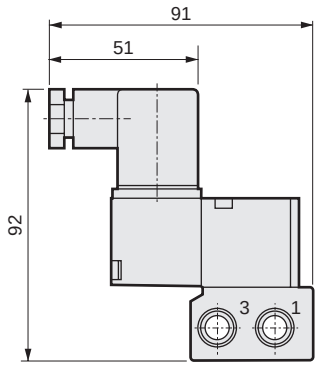

● C-connector: (C/C0*/C1/C2*/C3)

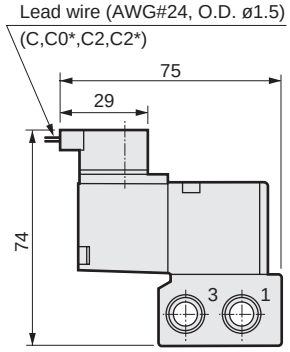

● D-connector: (D/D0*/D1/D2*/D3)

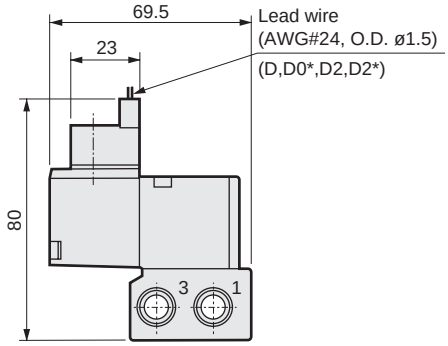

● Locking manual override: (M1)

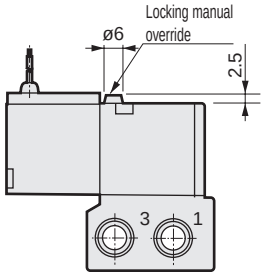

Dimensions CAD

M3PB180-06

● Port 2 - individual piping, port 1/3 - common piping: grommet lead wire

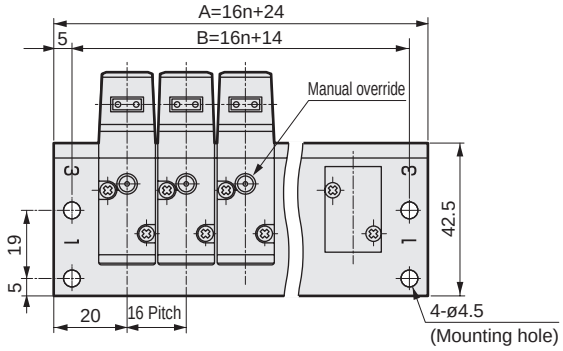

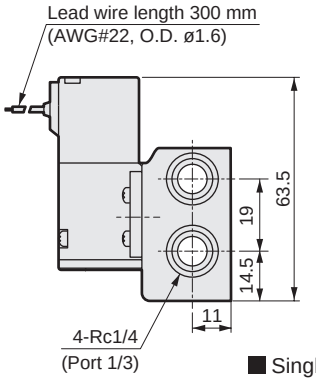

JIS symbol

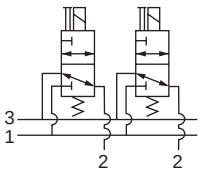

■ Single solenoid valve model No. for manifold
3PB119-00-option - voltage

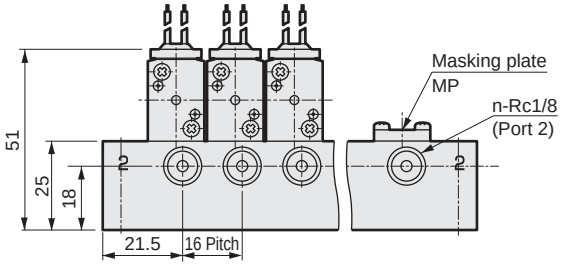

M3PB180-06Y

● Port 2 - rear piping, port 1/3 - common piping

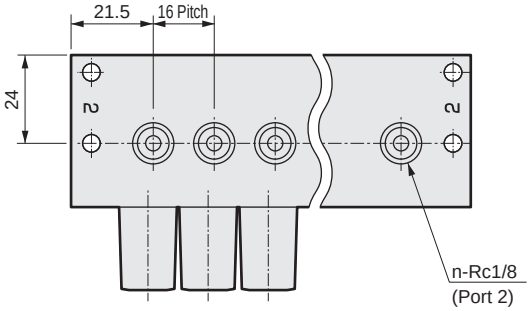

M3PB180-06A

● Port 2/3 - individual piping, port 1 - common piping: grommet lead wire

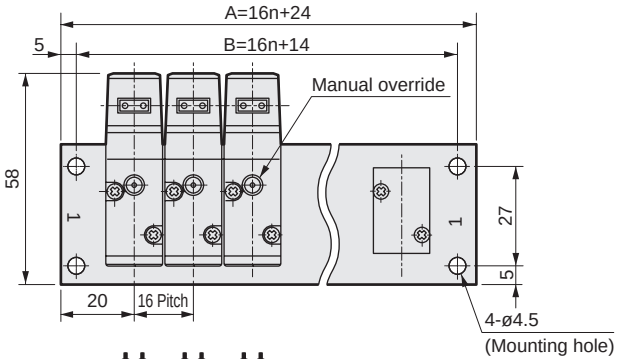

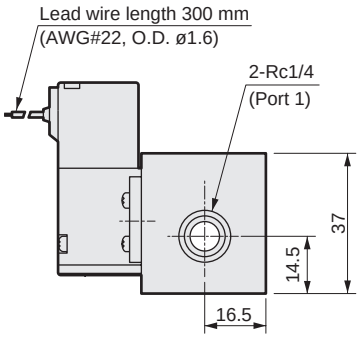

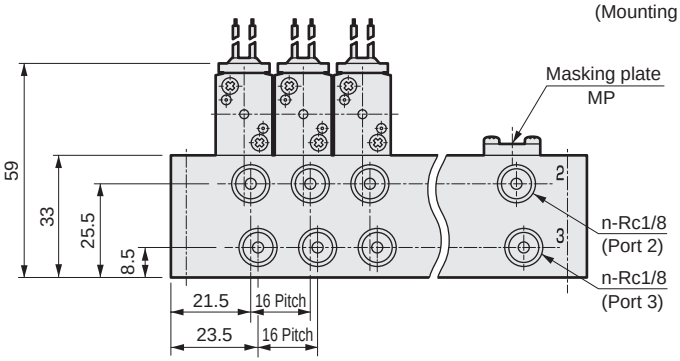

JIS symbol

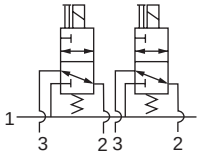

■ Single solenoid valve model No. for manifold
3PB119-00- option - voltage

Station No.	2	3	4	5	6	7	8	9	10	11	12	13	14	15	16	17	18	19	20
A	56	72	88	104	120	136	152	168	184	200	216	232	248	264	280	296	312	328	344
B	46	62	78	94	110	126	142	158	174	190	206	222	238	254	270	286	302	318	334

Dimensions

For M3PB1

● ø4, ø6 push-in fitting: (GS4/GS6)

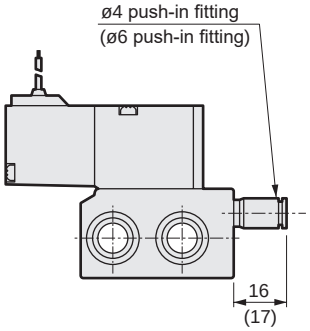

● Terminal box: (B)

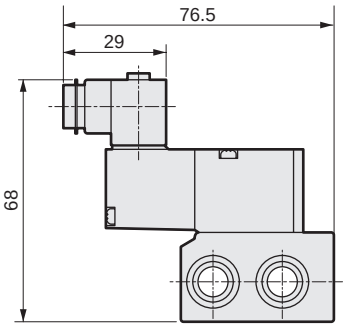

● Terminal box with lamp: (L/LS)

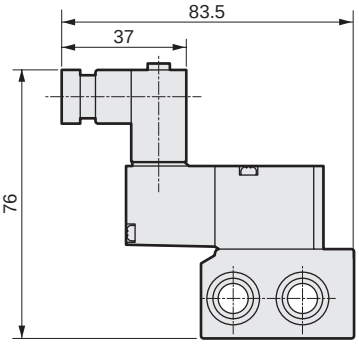

● C-connector: (C/C0*/C1/C2*/C3)

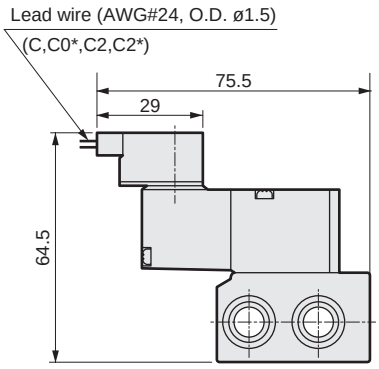

● D-connector: (D/D0*/D1/D2*/D3)

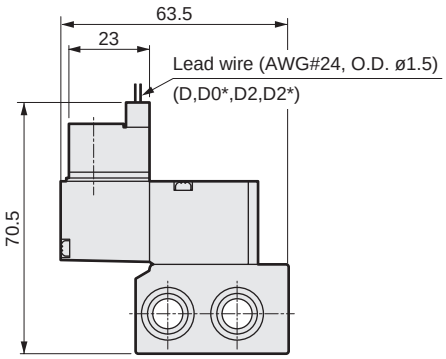

● Locking manual override: (M1)

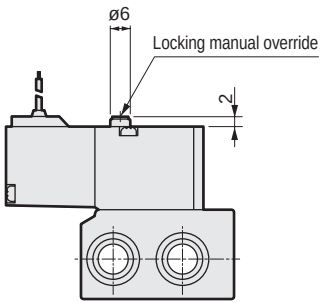

M3PB180-06B

CAD

● Port 1/2 - individual piping, port 3 - common piping: grommet lead wire

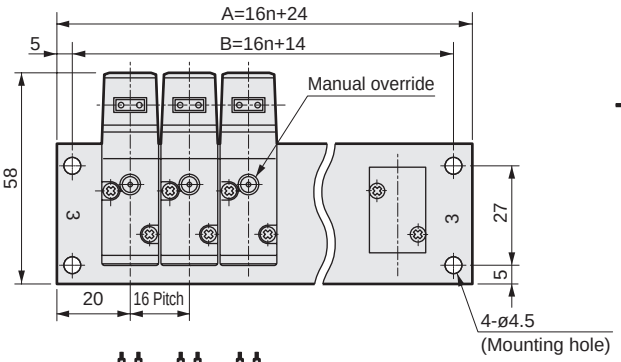

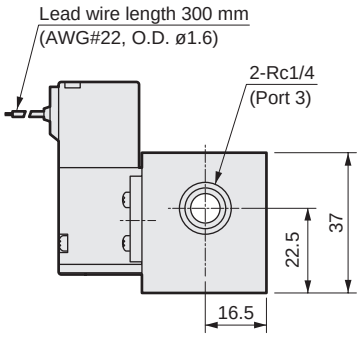

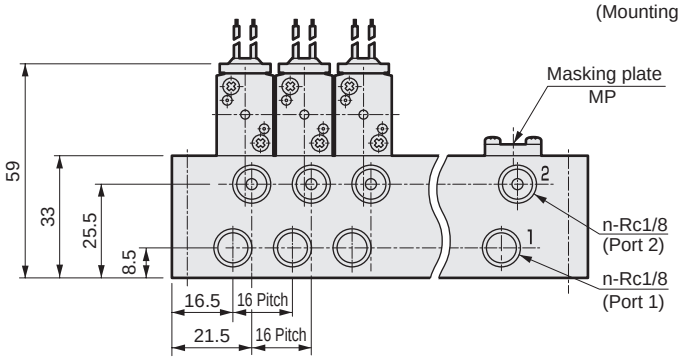

JIS symbol

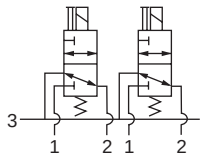

■ Model No. of single unit solenoid valve unit for manifold
3PB119-00-option-voltage

Station No.	2	3	4	5	6	7	8	9	10	11	12	13	14	15	16	17	18	19	20
A	56	72	88	104	120	136	152	168	184	200	216	232	248	264	280	296	312	328	344
B	46	62	78	94	110	126	142	158	174	190	206	222	238	254	270	286	302	318	334

Dimensions CAD

M3PB280-06

● Port 2 - individual piping, port 1/3 - common piping: grommet lead wire

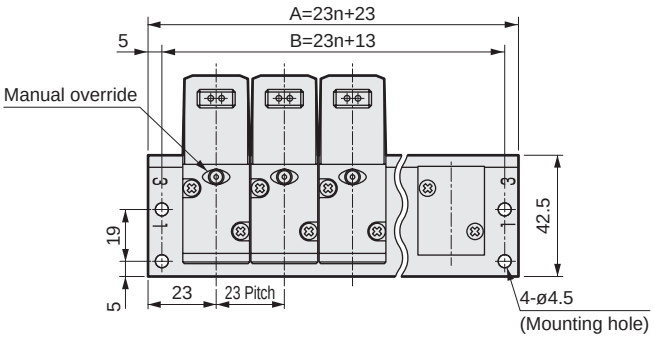

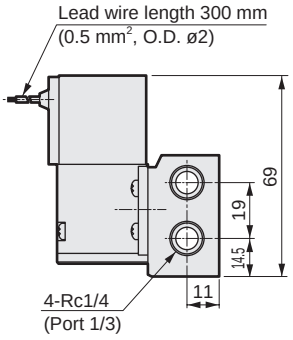

JIS symbol

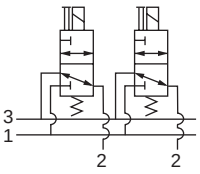

■ Single solenoid valve model No. for manifold
3PB219-00- option - voltage

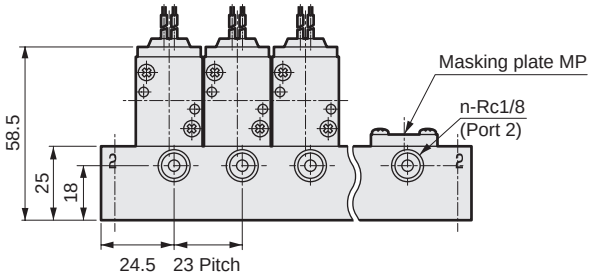

M3PB280-06Y

● Port 2 - rear piping, port 1/3 - common piping

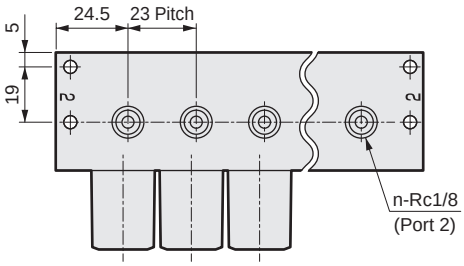

M3PB280-06A

● Port 2/3 - individual piping, port 1 - common piping: grommet lead wire

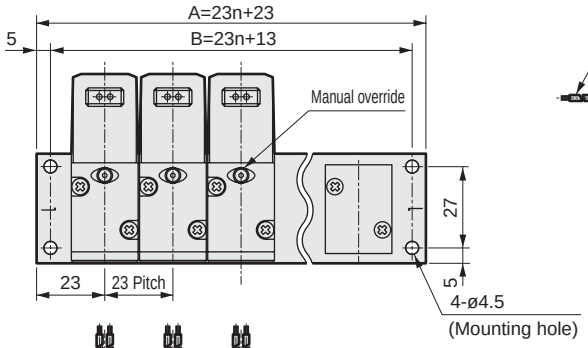

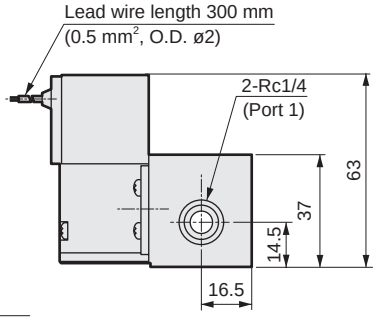

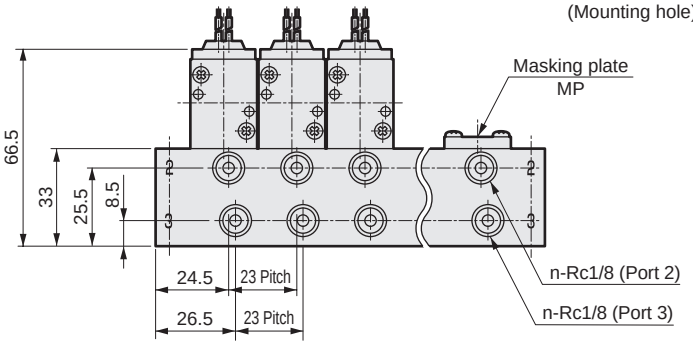

JIS symbol

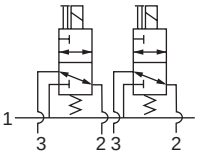

■ Single solenoid valve model No. for manifold
3PB219-00- option - voltage

Station No.	2	3	4	5	6	7	8	9	10	11	12	13	14	15	16	17	18	19	20
A	69	92	115	138	161	184	207	230	253	276	299	322	345	368	391	414	437	460	483
B	59	82	105	128	151	174	197	220	243	266	289	312	335	358	381	404	427	450	473

Dimensions

For M3PB2

● ø6, ø8 push-in fitting: (GS6/GS8)

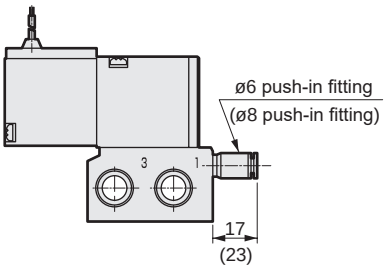

● Terminal box: (B/L/LS)

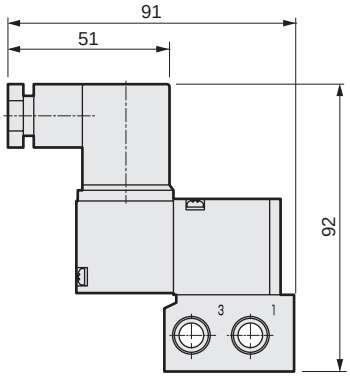

● C-connector: (C/C0*/C1/C2*/C3)

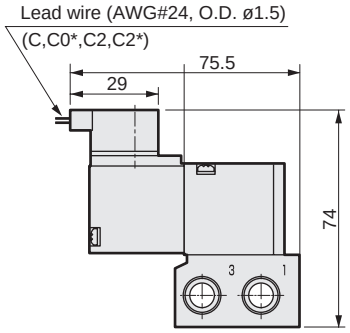

● D-connector: (D/D0*/D1/D2*/D3)

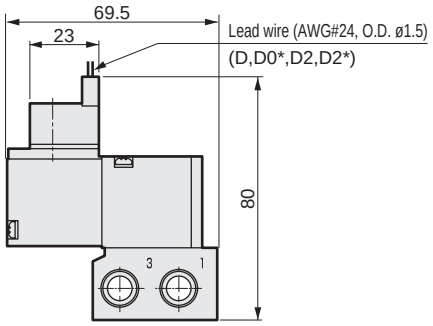

● Locking manual override: (M1)

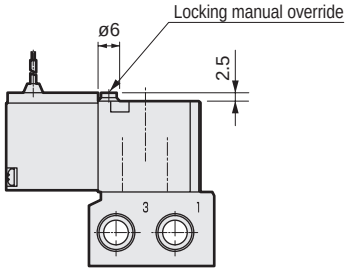

M3PB280-06B

CAD

● Port 1/2 - individual piping, port 3 - common piping: grommet lead wire

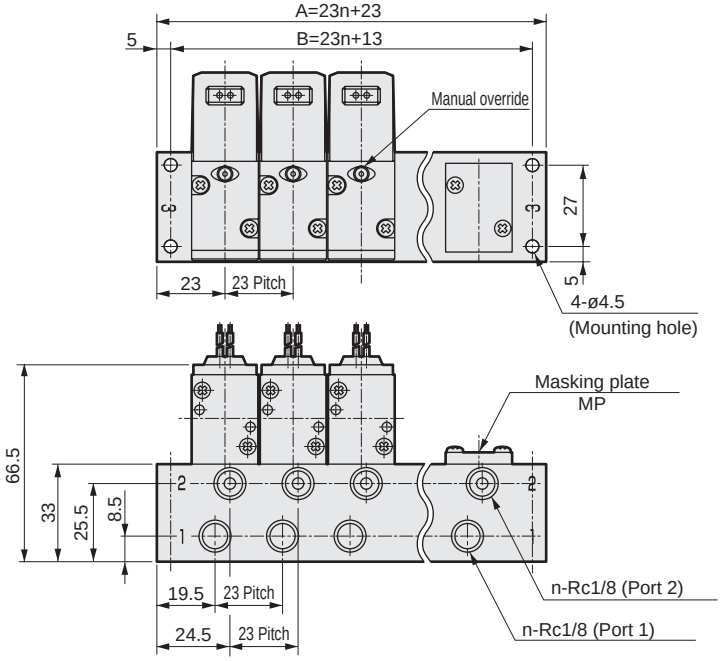

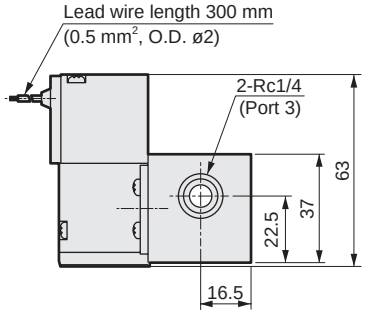

JIS symbol

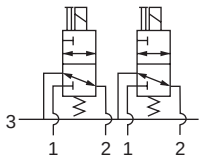

■ Single solenoid valve model No. for manifold
3PB219-00- option - voltage

Station No.	2	3	4	5	6	7	8	9	10	11	12	13	14	15	16	17	18	19	20
A	69	92	115	138	161	184	207	230	253	276	299	322	345	368	391	414	437	460	483
B	59	82	105	128	151	174	197	220	243	266	289	312	335	358	381	404	427	450	473

Terminal box wiring/connector connection method

Refer to the figure below when wiring the compact terminal box or the C and D connectors.

Compact terminal box wiring method (3P*1B)

Wire with steps ❶ to ❻.

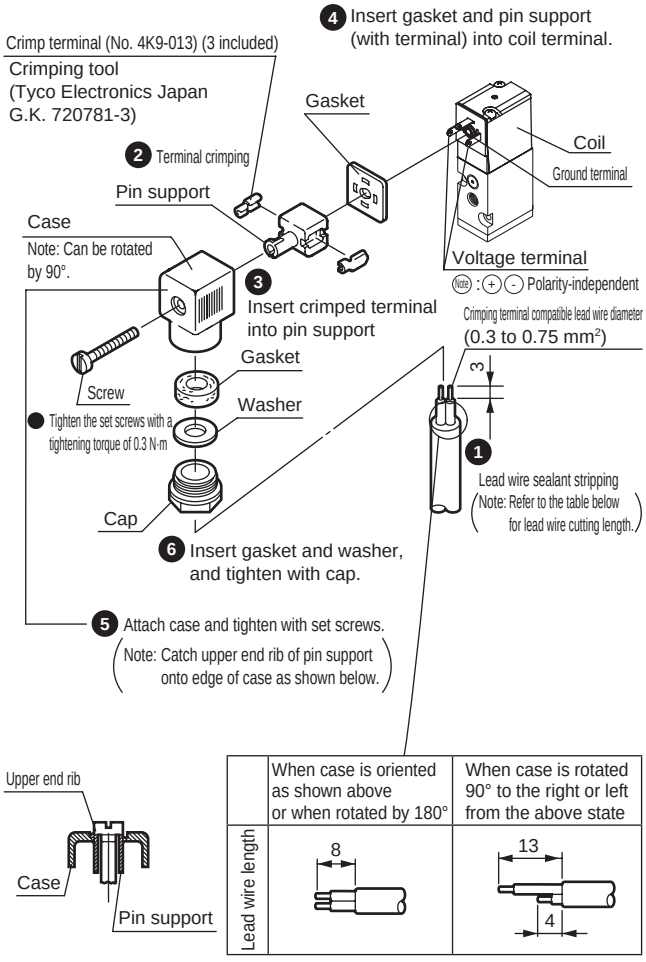

	When case is oriented as shown above or when rotated by 180°	When case is rotated 90° to the right or left from the above state
Lead wire length	8	13 / 4

Terminal box wiring method (3P*2B, L, LS)

Wire the terminal box with steps 1) to 3) referring to the figure below.

1) On the cabtyre cable ❼, pass through the cap ❹, washer ❺ and gasket ❻ in order, and insert this into the case ❷.
2) When using a crimping terminal, prepare the cabtyre cable ❼ at an appropriate length as illustrated and crimp the crimping terminal ❽ on the end thereof.
3) From the terminal block ❸, remove the screws ❿, position the crimp terminal ❽ (loosen and crimp when using a Y type terminal), and fasten the screws ❿ again.
   (Note) Fasten the screw with a tightening torque of 0.5 Nm ± 15%.

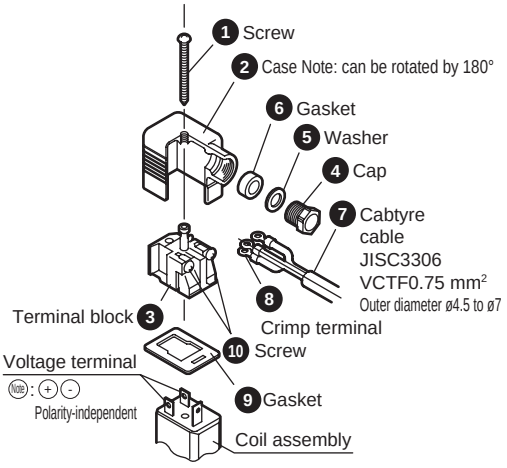

Remarks:
- It is possible to wire the terminals with bare wires. In this case, fasten the screw ❿, place the lead wire in the bracket, and fasten the screw again.
- The orientation of the cord can be changed by pulling out the terminal block from the case, rotating it by 180°, and returning the block to the case.
- The crimp terminals ❽ listed in the table below can be used.
  Furthermore, insulate the bare terminals of the terminals in the table below.
  In addition, use sheathed terminals for those equivalent to the table below.

Nichifu Terminal Industries Co., Ltd.		Fuji Terminal Industry Co., Ltd.		J.S.T. Mfg Co., Ltd.	
O terminal	Y terminal	O terminal	Y terminal	O terminal	Y terminal
0.3-3 1.25-3 1.25-3S	0.3-3 1.25Y-3 1.25Y-3.5	1.25-3	1.25-YAS3 1.25-YAS3.5	0.5-3 1.25-3	0.25-B3A 1.25-C3A

When using a product from a different manufacturer, be sure to use an equivalent item.

How to wire C type/D-connectors (3P*1/3P*2)

Wire with steps ❶ to ❻.

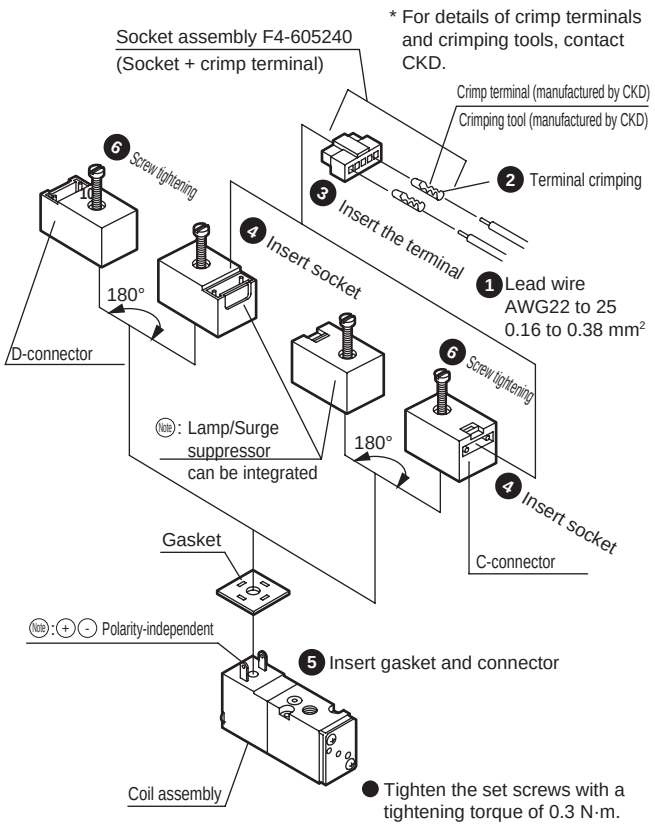

The power consumption of the 24 VDC model with lamp will be 2.0 W instead of 1.8 W.

How to wire compact terminal box with lamp (3P*1L, LS types)

Wire with steps ❶ to ❺.

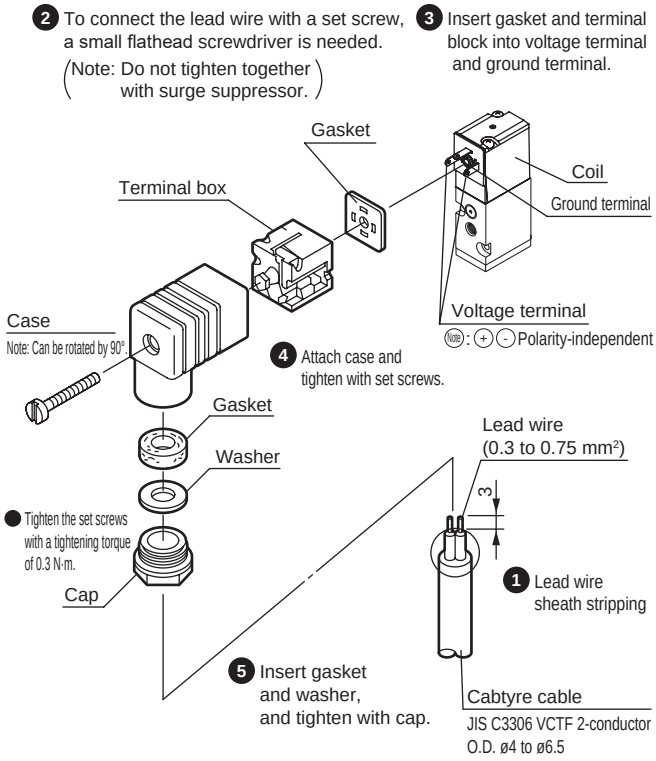

Pneumatic components

Safety Precautions

Be sure to read this section before use.
Refer to Intro Page 59 for general precautions for using valves.

Product-specific cautions: Direct acting 3-port pneumatic valve 3PA/3PB series

Design/selection

1. Common

⚠CAUTION

■ The applications will differ from solenoid valves for vacuum retention. When pads are being used, install a filter between the pad and the valve to prevent foreign matter from entering the unit.

■ Do not use this as a solenoid valve for emergency cutoff. If left pressurized for a long time, the starting response could be delayed.

■ When using the unit with vacuum, be sure to select the direct current (DC) specifications.
In addition, install a vacuum filter on the intake port.

2. Surge suppressor

■ The surge suppressor attached with the solenoid valve is intended to protect the output contacts for the solenoid valve drive. There is no significant protection for the other peripheral devices, and devices could be damaged or could malfunction due to a surge. As well, surges generated by other devices may be absorbed and cause damage such as burning. Note the following points.

(1) The surge suppressor functions to limit solenoid valve surge voltage, which can reach several hundred volts, to a low voltage level that the output contact can withstand. Depending on the output circuit used, this may be insufficient and could result in damage or malfunction. Check whether the surge suppressor can be used within the surge voltage limit of the solenoid valve in use, the output device's withstand pressure and circuit structure, and by the degree of return delay time. When necessary, provide other surge countermeasures. The inverse voltage surge generated when OFF can be suppressed to the following levels.

Specification voltage	Inverse voltage when OFF
12 VDC	Approx. 27 V
24 VDC	Approx. 47 V

(2) If the output unit is an NPN, a surge voltage equaling the voltage shown in the table at left plus the power supply voltage may be applied to the output transistor.

[Output transistor protection circuit: Installation example 1]

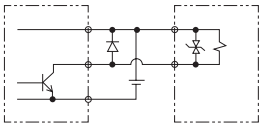

[Output transistor protection circuit: Installation example 2]

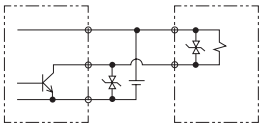

(3) If another device or solenoid valve is connected in parallel to the solenoid valve, the inverse voltage surge generated when the valve is OFF would apply to those devices. Even in the case of a solenoid valve with 24 VDC surge suppressor, a surge voltage may reach negative tens of volts for some models. This inverse voltage may cause damage or malfunction to other components connected in parallel. Avoid parallel connection of devices susceptible to inverse polarity voltages, e.g., LED indicators.
When driving several solenoid valves in parallel, the surge from other solenoid valves may enter the surge suppressor of one solenoid valve, and it may burn depending on the current value. When driving several solenoid valves with surge suppressors in parallel, surge current could concentrate at the surge suppressor with the lowest limit voltage and cause similar burning. Due to the variations in surge suppressor limit voltage that exist even among solenoid valves of the same model No., in the worst case the surge suppressor may burn out. Avoid driving several solenoid valves in parallel.

(4) The surge suppressor incorporated in the solenoid valve will often be short-circuited if it is damaged by overvoltage or overcurrent from other solenoid valves. Where there is a failed surge suppressor, if a large current flows when the output is ON, in the worst case scenario, the output circuit or solenoid valve could be damaged or ignited. Do not continue energizing in a state of failure. Additionally, to prevent large currents from continuing to flow, connect an overcurrent protection circuit to the power supply and drive circuit, or use a power supply with overcurrent protection.

Use/maintenance

⚠CAUTION

■ Continuous energizing for long periods may accelerate degradation of the solenoid valve. Furthermore, use with caution under the working conditions listed on the right, as with continuous energization.

· When energized time exceeds non-energized time in intermittent energizing
· When one energizing session exceeds 30 minutes in intermittent energizing

Consider heat dissipation when installing the product.
Contact CKD when energizing this device continuously.

P/M/B

Miniature pneumatic valve

Pilot operated 2, 3, 5-port valve

Overview

The miniature pneumatic 2, 3 and 5-port valves are compact solenoid valves with a width of 15 mm available as a series covering a wide range for working pressures of 1.0 MPa to low vacuum and with a variety of options. Suitable for operating cylinders of up to ø16.

Features

Selectable electrical connections

Series are available for lead wire, terminal box, C-connectors, and D-connectors. Combinations with a lamp and surge suppressor are also available.

Eliminates incorrect wiring

As connectors for DC models do not have ± polarity, there is no concern for incorrect wiring.

It is possible to aggregate multiple functions

DIN rail mount employed. Capable of integrating a variety of functions such as 4-way valve mixtures, different pressures, and mixed systems.

Capable of freely increasing or reducing the number of stations

Block manifold system employed. It is possible to freely increase or reduce the number of stations in accordance with the intended system.

Easy installation work

Block manifold system employed. The attachment/detachment of blocks and piping of tubes can be done with a single push. Maintenance is very easy.

Directly connected to an electronic control

With a working voltage of 12/24 VDC and low wattage design (75 mA with the 24 VDC model). It is possible to connect the unit directly with various electronic control circuits.

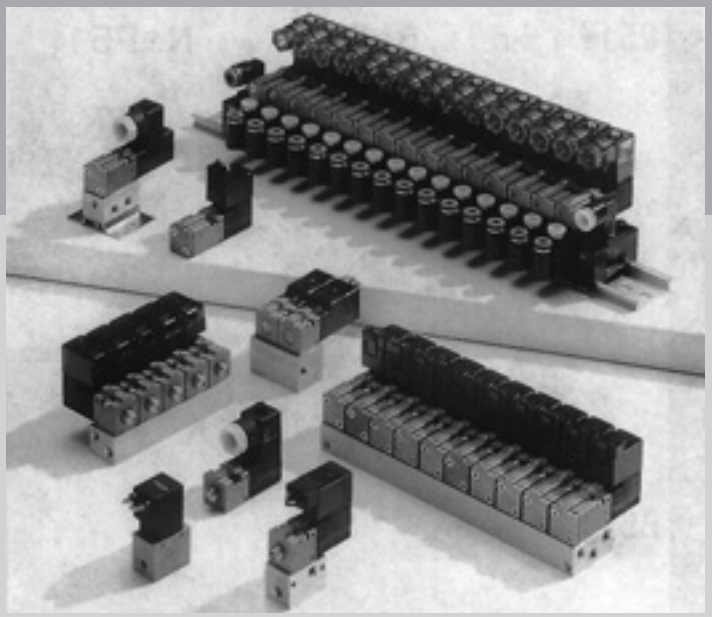

CONTENTS

Series variation	1634
Electrical connections list (wire connections/circuit)	1636
Discrete valve 2, 3, 5-port valve P/M/B	
● Pilot (P51*)	1638
● Direct mounting (M51*)	1638
● Sub-base (B51*)	1638
● Double 5-port valve (W2P513*)	1638
Individual wiring manifold	
● 2, 3, 5-port valve (B*P51*)	1654
Block manifold	
● 2, 3, 5-port valve (N*P51*)	1660
Block components	1666
Technical data	
(1) How to disassemble/assemble block manifold	1668
Manifold specifications sheets	1670
⚠ Safety precautions	1671

Series external appearance			Model No.	Position Number of solenoids JIS symbol	Valve performance: Flow characteristics C [dm³/(s·bar)] *1	Valve performance: Applicable cylinder bore size	Voltage (V)	
Single unit	2, 3-port valve	P51$\frac{2}{3}$* (Pilot) M51$\frac{2}{3}$* (Direct mounting) B51$\frac{2}{3}$3* (Sub-base) 	P51$\frac{2}{3}$*	2-port valve ● 2-position single NC 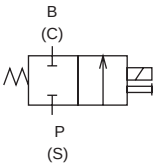	0.10 to 0.15	ø6 to ø16	100 AC 200 AC 12 DC 24 DC Option 110 AC 220 AC	
			M51$\frac{2}{3}$*					
			B51$\frac{2}{3}$*					
	Double 5-port valve	W2P513* 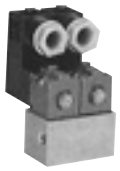	W2P513*					
	5-port valve	P5142 (Pilot) B5142 (Sub-base) 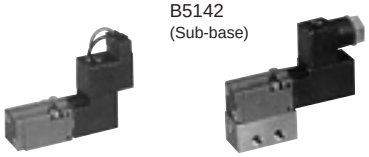	P5142	3-port valve ● 2-position single NC 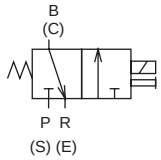	0.09			
			B5142					
Manifold Metal base	2, 3-port valve	B*P51 $\frac{2}{3}$ 	B*P51$\frac{2}{3}$	Double 5-port valve ● 4-position double 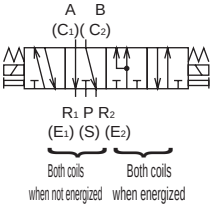	0.11 to 0.15	ø6 to ø16	100 AC 200 AC 12 DC 24 DC Option 110 AC 220 AC	
	5-port valve	B*P514 	B*P514		0.09			
Block	2, 3-port valve	N*P51 $\frac{2}{3}$ 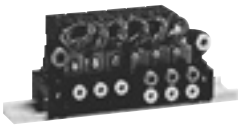	N*P51$\frac{2}{3}$	5-port valve ● 2-position single 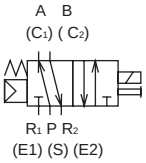	0.11 to 0.15			
	5-port valve	N*P514 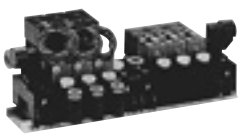	N*P514		0.09			

*1: Effective cross-sectional area S and sonic conductance C are converted as S ≈ 5.0 x C.

	Switching position			A port size			Electrical connections				Page
				Female thread							
	2-position single NC	4-position double	2-position single	M5	Rc1/8	ø4 push-in fitting	Grommet lead wire	Compact terminal box	C-connector	D-connector	
	●						●	●	●	●	1638
	●			●			●	●	●	●	
	●			●	●		●	●	●	●	
		●		●			●	●	●	●	1638
			●				●	●	●	●	1638
			●	●	●		●	●	●	●	
	●			●	●		●	●	●	●	1654
			●	●	●		●	●	●	●	1654
	●					●	●	●	●	●	1660
			●			●	●	●	●	●	1660

Note: Refer to the following page for details on electrical connections/other options.

Electrical connections

E Grommet lead wire

● Lead wire length
300 mm

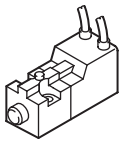

D D-connector with lead wire

● Lead wire length
D : 300 mm
D00 : 500 mm
D01 : 1000 mm
D02 : 2000 mm
D03 : 3000 mm

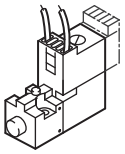

B Compact terminal box

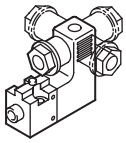

D1 D-connector without lead wire

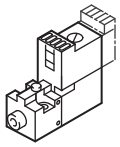

C C-connector with lead wire

● Lead wire length
C : 300 mm
C00: 500 mm
C01: 1000 mm
C02: 2000 mm
C03: 3000 mm

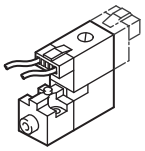

D2 D-connector/with lead wire with surge suppressor/lamp

● Lead wire length
D2 : 300 mm
D20: 500 mm
D21: 1000 mm
D22: 2000 mm
D23: 3000 mm

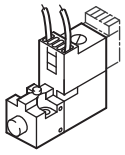

C1 C-connector without lead wire

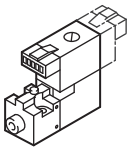

D3 D-connector without lead wire with surge suppressor/lamp

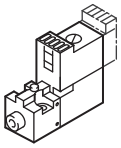

C2 C-connector with lead wire with surge suppressor/lamp

● Lead wire length
C2 : 300 mm
C00: 500 mm
C01: 1000 mm
C02: 2000 mm
C03: 3000 mm

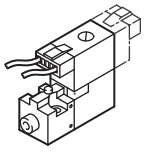

L Compact terminal box with lamp
Compact terminal box with lamp and lead wire

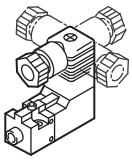

LS Compact terminal box with lamp/ surge suppressor

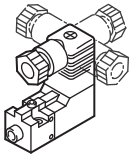

C3 C-connector without lead wire with surge suppressor/lamp

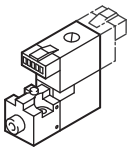

Manual override

M0 M4 Lateral non-locking

M0

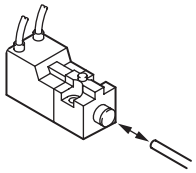

Press with a rod of ø3 or less

M4 (With dust cover)

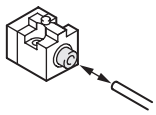

M1 Lateral locking

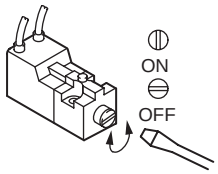

Rotate 90° with
a flathead (-) screwdriver

M6 Upward non-locking

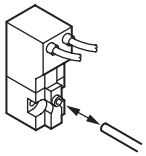

Press with a rod of ø2 or less

N Without manual override

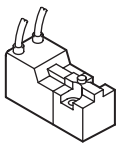

Other options

S Surge suppressor attached

AC

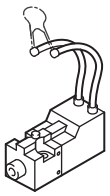

DC

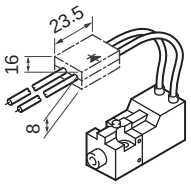

Suppression connector

Electric connection circuit diagram

Voltage type	Circuit	Wiring circuit	Wiring method
AC	-	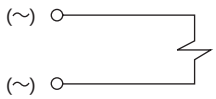	Grommet lead wire Terminal box (B) C-connector (C/C0*/C1) D-connector (D/D0*/D1)
	With indicator lamp	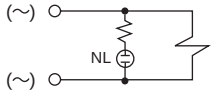	Terminal box (L)
	With surge suppressor and indicator lamp	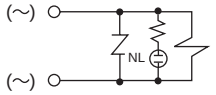	Terminal box (LS) C-connector (C2/C2*/C3) D-connector (D2/D2*/D3)
	Surge suppressor attached	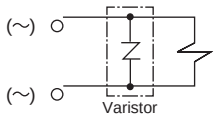	Surge suppressor attached (S)
DC	-	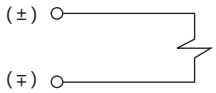	Grommet lead wire Terminal box (B) C-connector (C/C0*/C1) D-connector (D/D0*/D1)
	With surge suppressor and indicator lamp	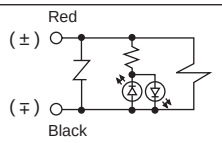	Terminal box (L) C-connector (C2/C2*/C3) D-connector (D2/D2*/D3)
	Surge suppressor attached	When using a suppression type (with 24 VDC or less) 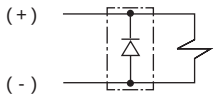 * Diode has polarity.	Surge suppressor attached (S)
		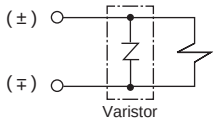	Surge suppressor attached (S)

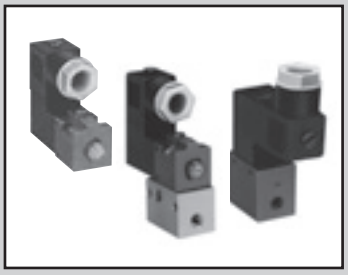

Single unit
Pilot operated 2, 3, 5-port miniature pneumatic valve

P/M/B Series

● Cylinder bore size: ø6 to ø16

CE Refer to the Ending for details. RoHS CAD

JIS symbol

● 2-port valve

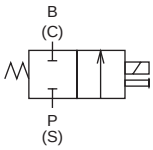

● 3-port valve

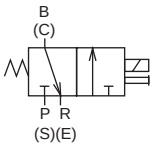

● 5-port valve

4-position double

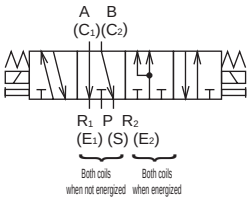

2-position single

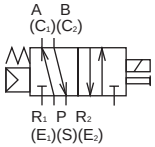

Common specifications

Item	Description
Valve and operation	Pilot operated poppet valve
Working fluid	Compressed air (low vacuum)
Max. working pressure MPa	Refer to Individual specifications listed below
Min. working pressure MPa	Refer to Individual specifications listed below
Proof pressure MPa	Refer to Individual specifications listed below
Ambient temperature °C	-10 (14°F) to 50 (122°F) (no freezing)
Fluid temperature °C	5 (41°F) to 50 (122°F)
Lubrication	Not required
Degree of protection	Dust-proof
Vibration resistance m/s²	50 or less
Shock resistance m/s²	300 or less
Atmosphere	Cannot be used in corrosive gas environment.

Electrical specifications

Item			Description
Rated voltage V	AC		100, 200 (50/60 Hz)
	DC		12, 24
Voltage fluctuation range			±10%
Starting current A	AC	100 V	0.056 / 0.044
		200 V	0.034 / 0.026
	DC	12 V	0.150
		24 V	0.075
Holding current A	AC	100 V	0.028 / 0.022
		200 V	0.017 / 0.013
	DC	12 V	0.150
		24 V	0.075
Power consumption W ( ):With indicator lamp	AC	100 V	1.8 / 1.4 (2.0/1.6)
		200 V	2.1 / 1.6 (2.3/1.8)
	DC	12 V	1.8(2.0)
		24 V	1.8(2.0)
Thermal class			B (molded coil)
Temperature rise °C			45 (113°F)

Reference: 100 VAC 50/60 Hz can be used with a rated voltage of 110 VAC 60 Hz and 200 VAC 50/60 Hz can be used with 220 VAC 60 Hz.

Performance/characteristics by model (2-port valve)

Item	2-port valve					
	P5122	M5122	B5122	P5126	M5126	B5126
Max. working pressure MPa	1.0 (≈150 psi, 10 bar)			0.6 (≈87 psi, 6 bar) *2		
Min. working pressure MPa	0.1 (≈15 psi, 1 bar)			0.1 (≈15 psi, 1 bar) *2		
Proof pressure MPa	1.5 (≈220 psi, 15 bar)			1.5 (≈220 psi, 15 bar)		
Port size	-	M5		-	M5	
Response time *1 ms	30 or less			30 or less		

Performance/characteristics by model (3, 5-port valve)

1 MPa ≈ 145.0 psi, 1 MPa = 10 bar

Item	3-port valve						5-port valve			
	P5132	M5132	B5132	P5136	M5136	B5136	W2P5132	W2P5136	P5142	B5142
Max. working pressure MPa	1.0 (≈150 psi, 10 bar)			0.6 (≈87 psi, 6 bar)			1.0	0.6	0.70 (≈100 psi, 7 bar)	
Min. working pressure MPa	0.1 (≈15 psi, 1 bar)			0.1 (≈15 psi, 1 bar) (*2)			0.1 (≈15 psi, 1 bar)		0.15 (≈22 psi, 1.5 bar)	
Proof pressure MPa	1.5 (≈220 psi, 15 bar)			1.5 (≈220 psi, 15 bar)			1.5 (≈220 psi, 15 bar)		1.05 (≈150 psi, 10.5 bar)	
Port size	-	M5		-	M5		M5		-	M5
Response time *1 ms	30 or less						60 or less			

*1: The response time is the value at 0.5 MPa supply pressure, with no lubrication, and with the power ON. It depends on the pressure and the lubricant quality.

*2: When specifying the pressure classification V (for low pressure, for low vacuum pressure), the units can be used with low pressure (0 to 0.29 MPa) or low vacuum (3.3 to 101.00 kPa (abs) {25 to 760 Torr}).

Weight (2-port valve)

Item	2-port valve					
	P5122	M5122	B5122	P5126	M5126	B5126
Weight g	47		93	47		93

Weight (3, 5-port valve)

Item	3-port valve						5-port valve			
	P5132	M5132	B5132	P5136	M5136	B5136	W2P5132	W2P5136	P5142	B5142
Weight g	47		93	47		93	186		68	118

Flow characteristics

Model No.	Solenoid position	Port size	C[dm³/(s·bar)]	b
P5122	2-port	-	0.10	0.13
M5122		M5		
B5122				
P5126		-	0.15	0.14
M5126		M5		
B5126				

Model No.	Solenoid position	Port size	P→B		B→R	
			C[dm³/(s·bar)]	b	C[dm³/(s·bar)]	b
P5132	3-port	-	0.10	0.13	0.15	0.17
M5132		M5				
B5132						
P5136		-	0.15	0.14	0.15	0.20
M5136		M5				
B5136						

Model No.	Solenoid position	Port size	P→A/B		A/B→R1/R2	
			C[dm³/(s·bar)]	b	C[dm³/(s·bar)]	b
W2P5132	5-port	M5	0.12	0.13	0.15	0.20
W2P5136			0.15	0.07	0.15	0.24
P5142		-	0.09	0.21	0.11	0.24
B5142		M5				

*1: Effective cross-sectional area S and sonic conductance C are converted as S ≈ 5.0 x C.

How to order

● 2, 3-port valve

B 513 2 - M6 B R - M5 - U - DC24V

● Double 5-port valve

W2P513 2 - M6 B - M5 - DC24V

● 5-port valve

B 514 2 - M6 B - M5 - U - DC24V

Number of ports

Ⓐ Model No.

Ⓑ Orifice

Ⓒ Manual override

Ⓓ Electrical connections

Note Refer to page 1637 for the circuit diagram with a surge suppressor/lamp.

Ⓔ Pressure classification

Ⓕ Coil direction

Ⓖ Port size

Ⓗ Other options

Ⓘ Bracket

Ⓙ Voltage

Code	Description	Ⓐ Model No. Pilot 2 P512	Pilot 3 P513	Pilot 5 P514	Direct mounting 2 M512	Direct mounting 3 M513	Sub-base *1 2 B512	Sub-base *1 3 B513	Sub-base *1 5 B514	Double 5-port valve 5 W2P513
Ⓑ Orifice										
2	ø1.2	●	●	●	●	●	●	●	●	●
6	ø1.6	●	●		●	●	●	●		●
Ⓒ Manual override										
M0	Lateral non-locking (std) *2	●	●				●	●		●
M1	Lateral lock (option) *2	●	●				●	●		●
M4	Dust cover, non-locking (comes standard)	●	●				●	●		●
M6	Upward non-locking (standard)	●	●	●	●	●	●	●	●	●
N	No manual override (option)	●	●	●	●	●	●	●	●	●
Ⓓ Electrical connections										
	Refer to the next page for electrical connections.									
Ⓔ Pressure classification										
Blank	Standard	●	●	●	●	●	●	●	●	●
V	For low pressure and low vacuum *4	●	●		●	●	●	●		
Ⓕ Coil direction										
Blank	Standard direction	●	●	●	●	●	●	●		
R	180° rotation direction	●	●		●	●				
Ⓖ Port size										
Blank	No piping	●	●	●						
M5	M5 (standard)				●	●	●	●	●	●
06	Rc1/8 (optional)						●	●	●	
Ⓗ Other options										
Blank	None	●	●	●	●	●	●	●	●	●
S	Surge suppressor attached *5, *7	●	●	●	●	●	●	●	●	●
X	Continuous energization (custom order) *6			●					●	
Ⓘ Bracket										
U	U bracket attached						●	●	●	
L	L bracket attached				●	●				
Ⓙ Voltage										
AC100V	Standard: 100 VAC 50/60 Hz	●	●	●	●	●	●	●	●	●
AC200V	Standard: 200 VAC 50/60 Hz	●	●	●	●	●	●	●	●	●
DC24V	Standard: 24 VDC	●	●	●	●	●	●	●	●	●
DC12V	Standard: 12 VDC	●	●	●	●	●	●	●	●	●
AC110V	Option: 110 VAC 50/60 Hz	●	●	●	●	●	●	●	●	●
AC220V	Option: 220 VAC 50/60 Hz	●	●	●	●	●	●	●	●	●
*** Other custom order products**										
AC24V		●	●	●	●	●	●	●	●	●
AC48V		●	●	●	●	●	●	●	●	●
DC6V		●	●	●	●	●	●	●	●	●
DC48V		●	●	●	●	●	●	●	●	●

⚠ Precautions for model No. selection

*1 : The single unit sub-base (B) is the pilot (P).

*2 : M0 and M1 are not available as the M (direct mounting) or for low vacuum pressure (V).

*4 : When pressure classification V (for low pressure/for low vacuum) has been specified, the orifice will be "6". Draw in the vacuum as vacuum from port P (S) or R (E). When using at low pressure, supply from the P(S).

*5 : The unit is a suppression connector for 24 VDC or less.

6 : Other option code X is applicable to the 514 type.

*7 : The surge suppressor can only be selected when the grommet lead wire or compact terminal box "B" has been selected for the electrical connections.

[Example of model No.]

B5142-M6B-M5-U-AC100V

Ⓐ Model No. : Sub-base 5-port valve B514
Ⓑ Orifice : ø1.2
Ⓒ Manual override : Upward non-locking
Ⓓ Electrical connections : Compact terminal box
Ⓔ Pressure classification : Standard
Ⓕ Coil direction : Standard direction
Ⓖ Port size : M5
Ⓗ Other options : None
Ⓘ Bracket : U bracket attached
Ⓙ Voltage : 100 VAC

CE marking specifications

** - Voltage - **ST**

• Standard voltage of 24 VDC or less is CE marking-compatible even if the model No. is not indicated with "ST".

Copper and PTFE free specifications

● Copper- and PTFE-based materials are not used in the flow path.

** - Voltage - **P6**

(Electrical connection list)

Code		Description	Ⓐ Model No. Pilot 2 P512	Pilot 3 P513	Pilot 5 P514	Direct mounting 2 M512	Direct mounting 3 M513	*1 Sub-base 2 B512	Sub-base 3 B513	Sub-base 5 B514	Double 5-port valve 5 W2P513
Ⓓ **Electrical connections**											
E	Standard	Grommet lead wire (300 mm)	●	●	●	●	●	●	●	●	●
B	Standard	Compact terminal box	●	●	●	●	●	●	●	●	●
C-connector (lead wire lateral direction)											
C	Std.	Lead wire length (300 mm)	●	●	●	●	●	●	●	●	●
C00	Option	Lead wire length (500 mm)	●	●	●	●	●	●	●	●	●
C01	Option	Lead wire length (1000 mm)	●	●	●	●	●	●	●	●	●
C02	Option	Lead wire length (2000 mm)	●	●	●	●	●	●	●	●	●
C03	Option	Lead wire length (3000 mm)	●	●	●	●	●	●	●	●	●
C1	Option	Without lead wire	●	●	●	●	●	●	●	●	●
C2	Option	Lead wire (300 mm), surge suppressor/indicator lamp	●	●	●	●	●	●	●	●	●
C20	Option	Lead wire (500 mm), surge suppressor/indicator lamp	●	●	●	●	●	●	●	●	●
C21	Option	Lead wire (1000 mm), surge suppressor/indicator lamp	●	●	●	●	●	●	●	●	●
C22	Option	Lead wire (2000 mm), surge suppressor/indicator lamp	●	●	●	●	●	●	●	●	●
C23	Option	Lead wire (3000 mm), surge suppressor/indicator lamp	●	●	●	●	●	●	●	●	●
C3	Option	No lead wire, with surge suppressor/indicator lamp	●	●	●	●	●	●	●	●	●
D-connector (lead wire upward direction)											
D	Option	Lead wire length (300 mm)	●	●	●	●	●	●	●	●	●
D00	Option	Lead wire length (500 mm)	●	●	●	●	●	●	●	●	●
D01	Option	Lead wire length (1000 mm)	●	●	●	●	●	●	●	●	●
D02	Option	Lead wire length (2000 mm)	●	●	●	●	●	●	●	●	●
D03	Option	Lead wire length (3000 mm)	●	●	●	●	●	●	●	●	●
D1	Option	Without lead wire	●	●	●	●	●	●	●	●	●
D2	Option	Lead wire (300 mm), surge suppressor/indicator lamp	●	●	●	●	●	●	●	●	●
D20	Option	Lead wire (500 mm), surge suppressor/indicator lamp	●	●	●	●	●	●	●	●	●
D21	Option	Lead wire (1000 mm), surge suppressor/indicator lamp	●	●	●	●	●	●	●	●	●
D22	Option	Lead wire (2000 mm), surge suppressor/indicator lamp	●	●	●	●	●	●	●	●	●
D23	Option	Lead wire (3000 mm), surge suppressor/indicator lamp	●	●	●	●	●	●	●	●	●
D3	Option	No lead wire, with surge suppressor/indicator lamp	●	●	●	●	●	●	●	●	●
Compact terminal box											
L	Option	Without lead wire With indicator lamp	●	●	●	●	●	●	●	●	●
LS	Option	Without lead wire With surge suppressor and indicator lamp	●	●	●	●	●	●	●	●	●

*3: With DC voltage, L is equipped with a surge suppressor.

Internal structure and parts list

P/B 512

● Manual override lateral direction (M0) 2-port valve

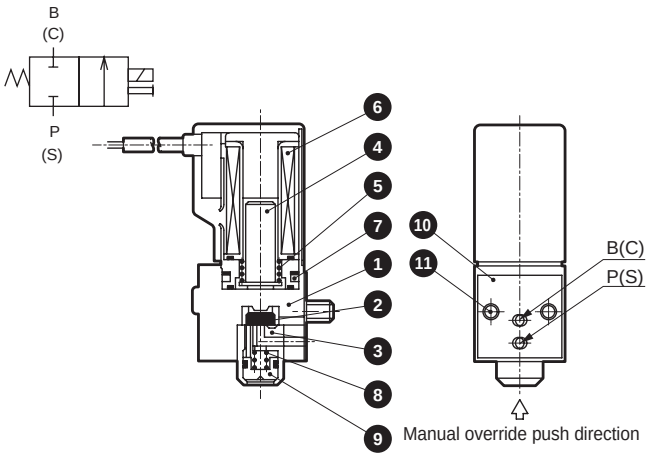

P/B 513

● Manual override lateral direction (M0) 3-port valve

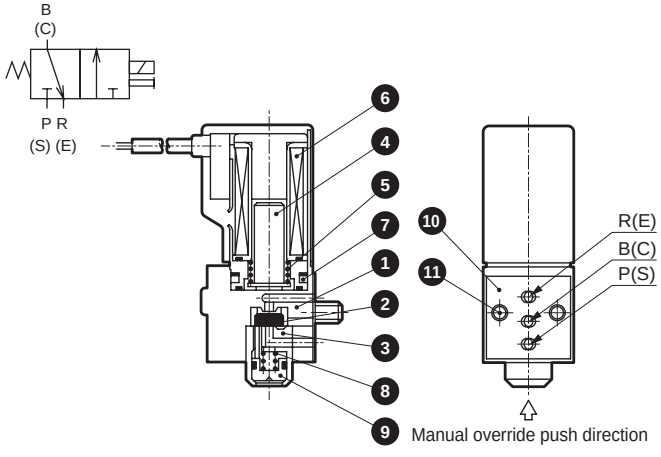

P/M/B 512

● Manual override upward direction (M6) 2-port valve

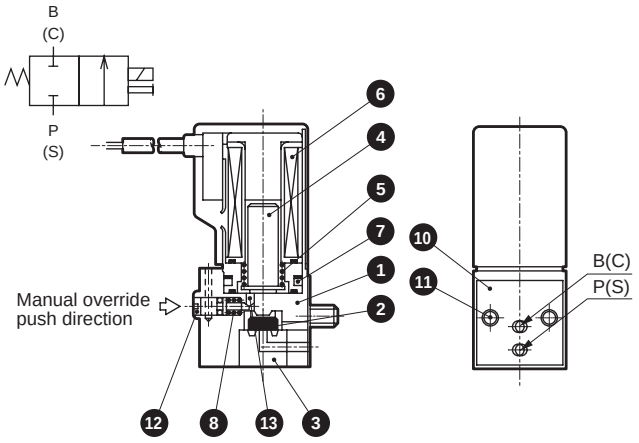

P/M/B 513

● Manual override upward direction (M6) 3-port valve

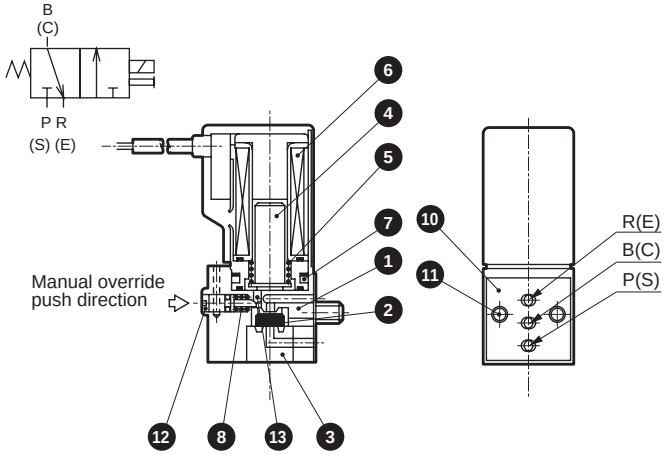

Main parts list

No.	Part name	Material	No.	Part name	Material
1	Body	Zinc die-casting	10	Body gasket	Cork
2	Valve disc	Nitrile rubber	11	Cross-recessed pan head machine screw with spring washer	Steel
3	Bottom seat	Copper alloy	12	Manual shaft	Resin
4	Plunger	Stainless steel	13	Manual pin	Resin
5	Plunger spring	Stainless steel			
6	Coil assembly	-			
7	Wave pin	Piano wire			
8	Manual spring	Stainless steel			
9	Push button	Copper alloy			

Operational principle

● When not energized

When energization of the coil is suspended, the plunger will move away from the fixed core. The valve disc will close due to the spring and the weight of the plunger.

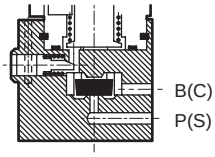

(2-port valve)

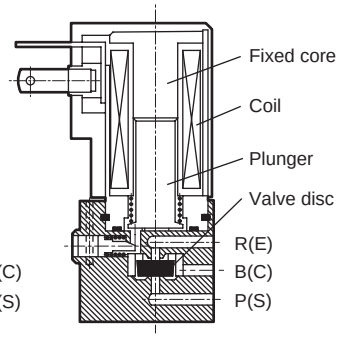

(3-port valve)

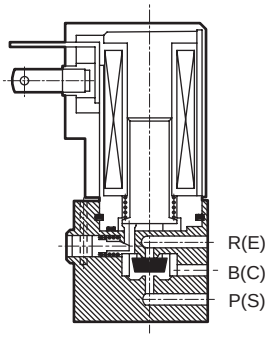

(3-port valve)

● When energized

When energizing the coil, the plunger is adsorbed onto the fixed core and the valve disc will be pushed up to open due to the pressure applied from P (S).

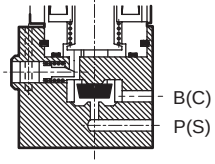

(2-port valve)

Internal structure and parts list

P/B 5142

● Manual override upward direction (M6) 5-port valve
2-position single

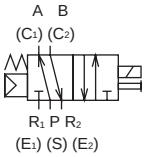

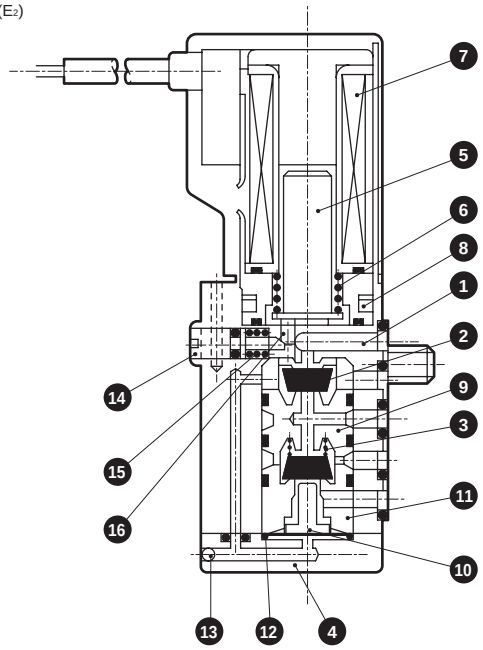

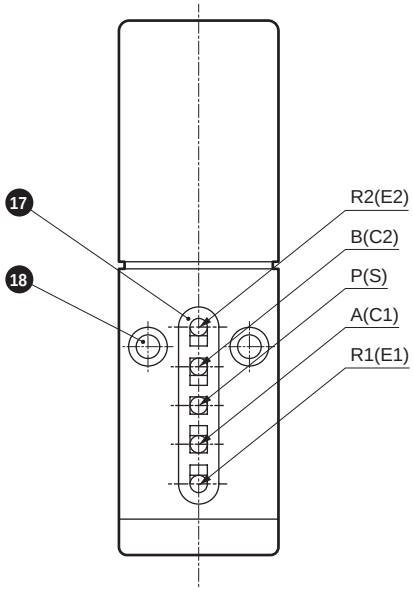

Main parts list

No.	Part name	Material	No.	Part name	Material
1	Body	Zinc die-casting	10	Piston	Copper alloy
2	Valve disc	Nitrile rubber	11	Bottom seat B	Copper alloy
3	Spring	Stainless steel	12	Diaphragm	Nitrile rubber
4	Cap	Zinc die-casting	13	Steel ball	Steel
5	Plunger	Stainless steel	14	Manual shaft	Resin
6	Plunger spring	Stainless steel	15	Manual spring	Stainless steel
7	Coil assembly	-	16	Manual pin	Resin
8	Wave pin	Piano wire	17	Body gasket	Nitrile rubber
9	Bottom seat A	Copper alloy	18	Cross-recessed pan head machine screw with spring washer	Steel

Operational principle

● When not energized
When energization of the coil is suspended, the plunger will lower and the pressure on the B (C2) side will be exhausted to the R2 (E2) side. At the same time, the valve seat (2) will lower due to the spring force and the pressure on the P (S) side will be guided to the A (C1) side.

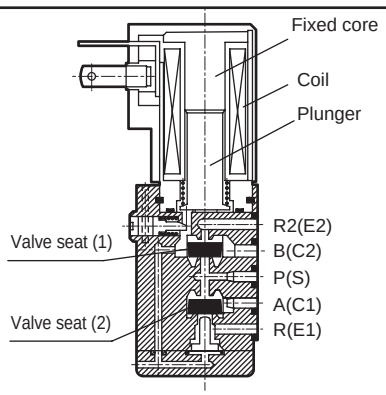

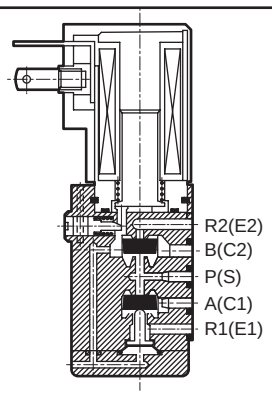

● When energized
When the coil is energized, the plunger will rise and the pressure on the P (S) side will be guided to the B (C2) side. At the same time, the valve seat (2) will rise due to this pressure and the pressure on the A (C1) side will be exhausted to the R1 (E1) side.

Dimensions CAD

P512 2/6

● 2-port: grommet lead wire

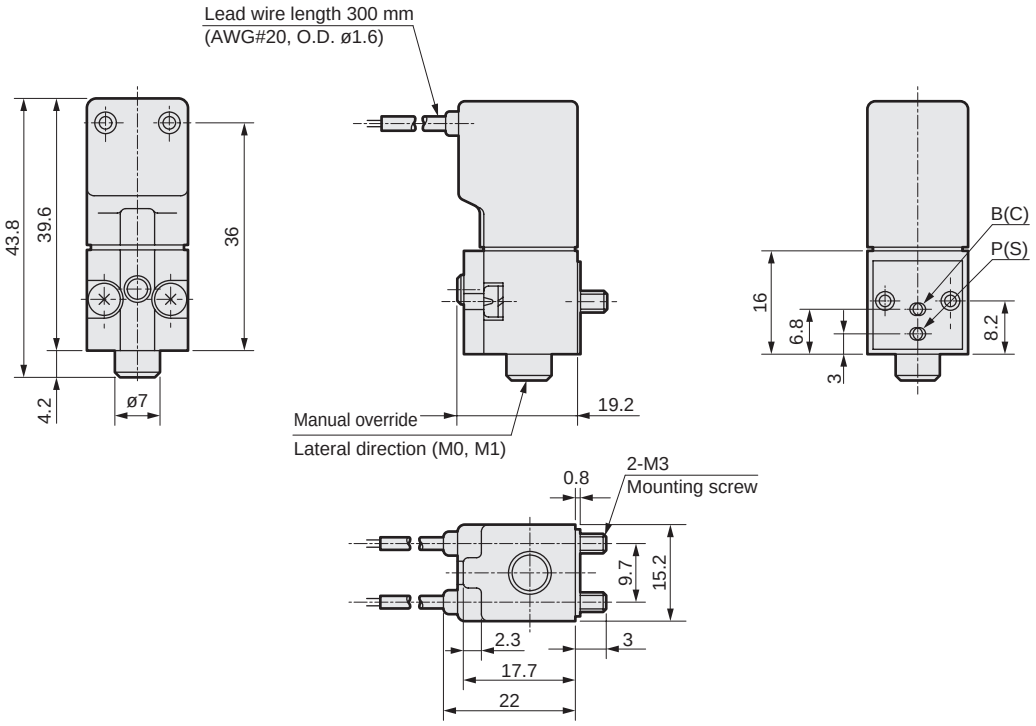

P513 2/6

● 3-port: grommet lead wire

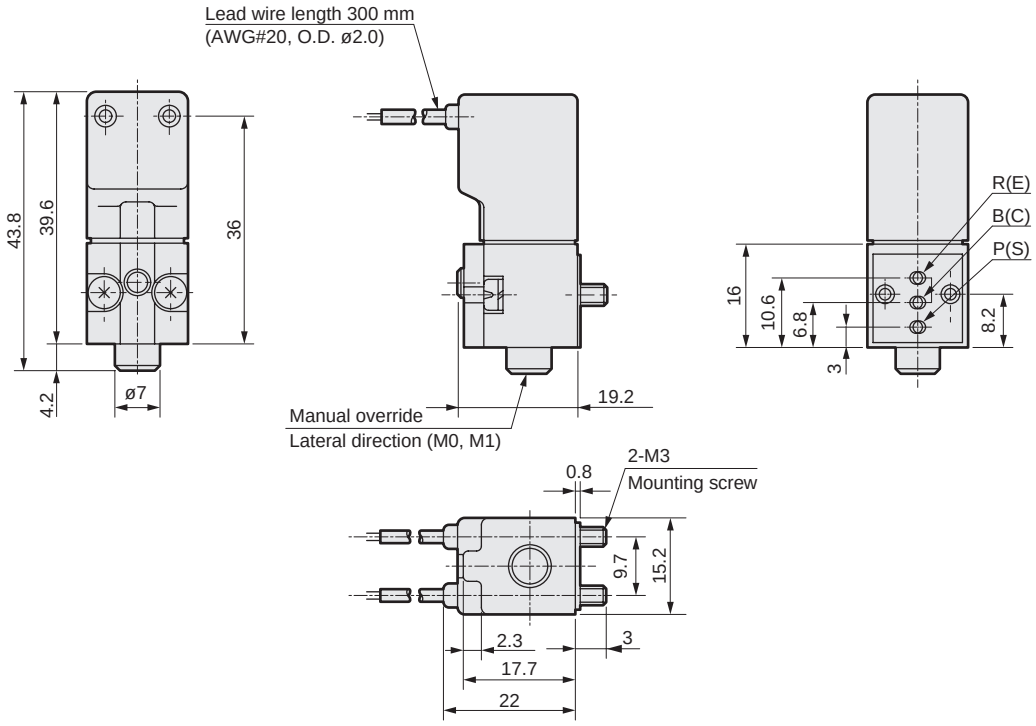

Dimensions CAD

● Non-locking manual override upward direction: (M6)

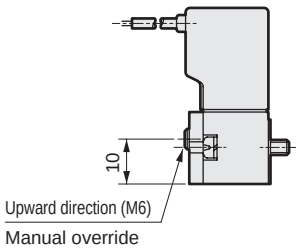

● Compact terminal box: (B)

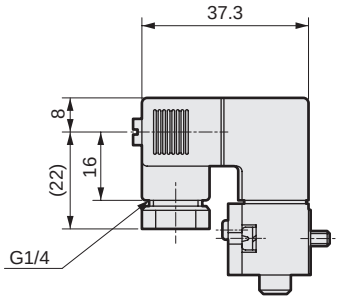

● C-connector:
(C/C0*/C1/C2/C2*/C3)

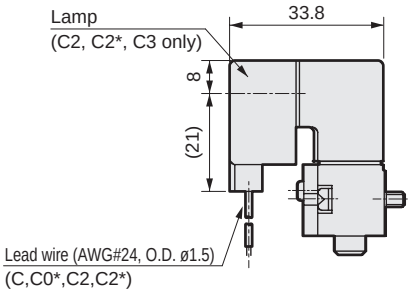

● D-connector:
(D/D0*/D1/D2/D2*/D3)

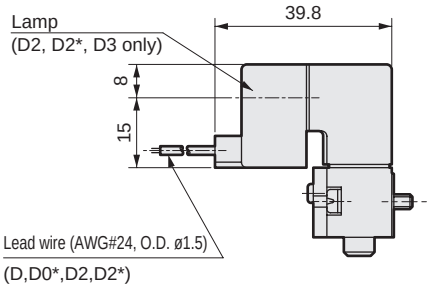

● Compact terminal box with lamp: (L)
With surge suppressor and indicator lamp: (LS)

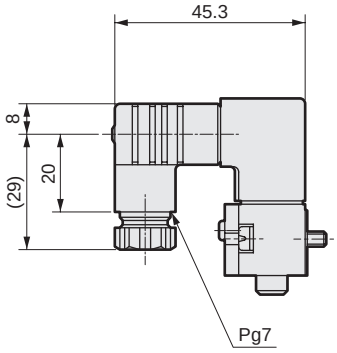

● Coil direction 180° rotation: (R)

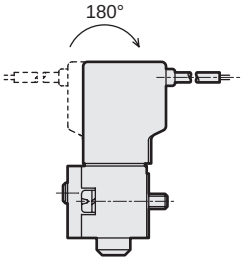

Dimensions CAD

M512 2/6

● 2-port: grommet lead wire

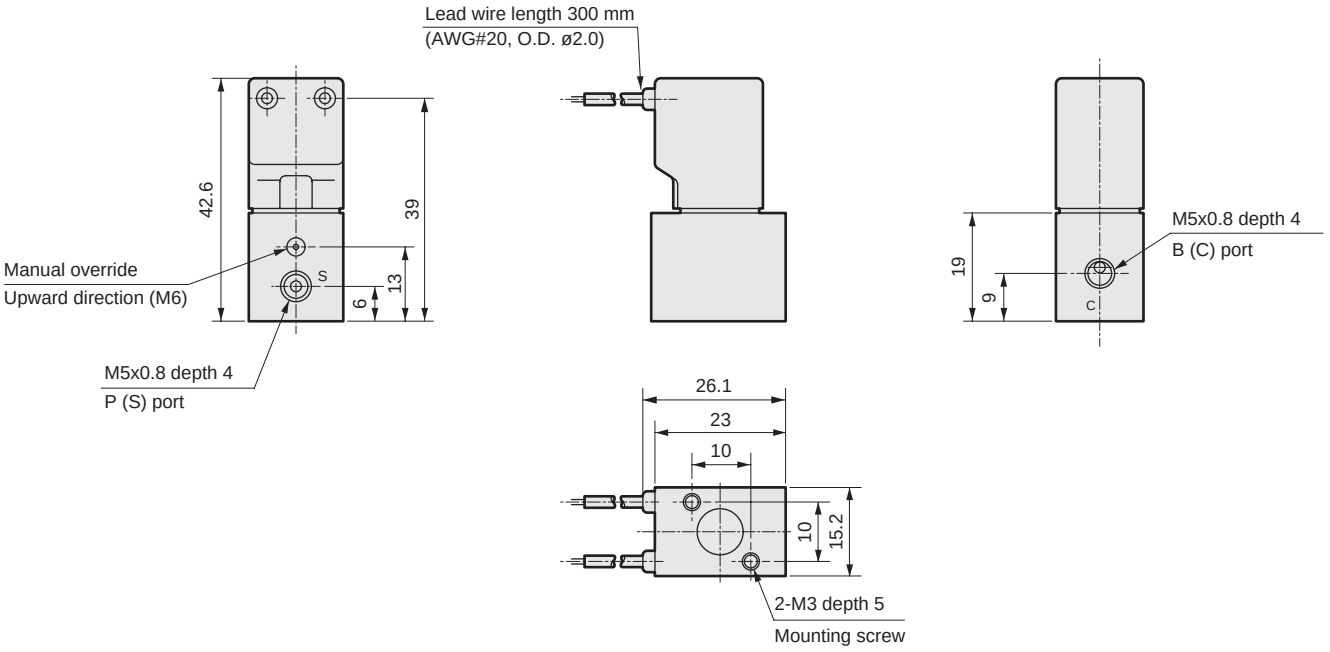

M513 2/6

● 3-port valve: grommet lead wire

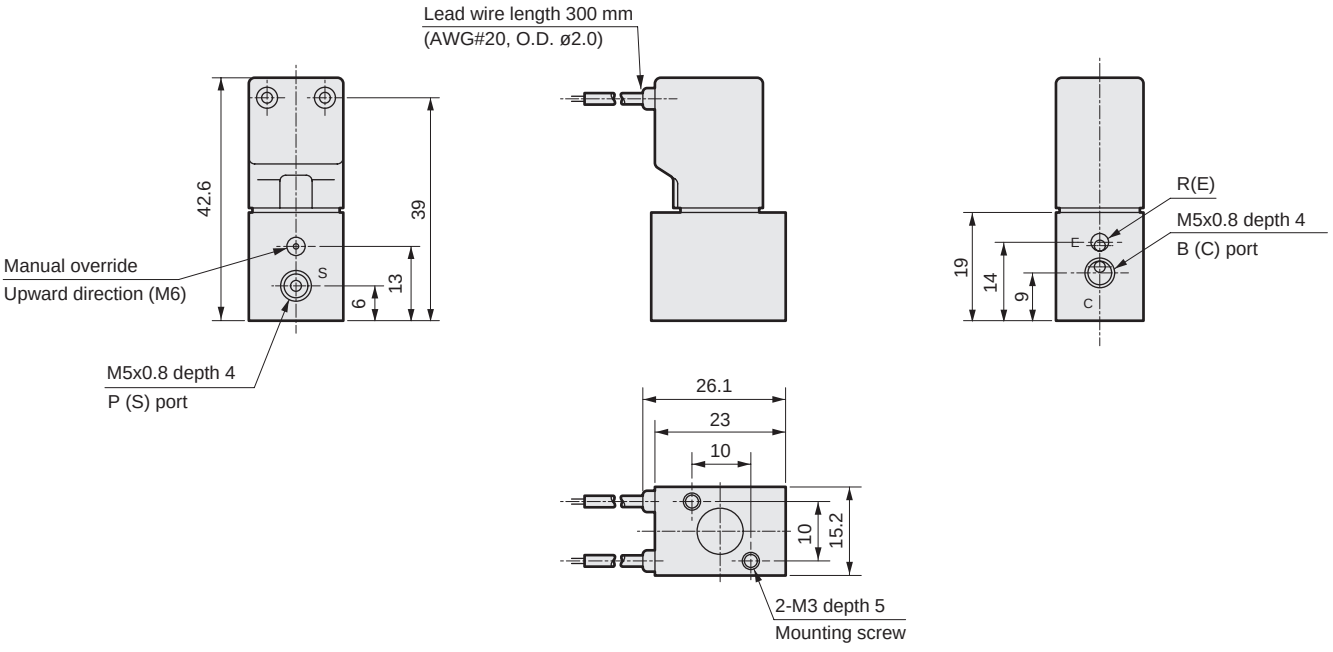

Dimensions CAD

● Compact terminal box: (B)

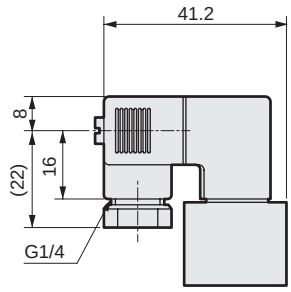

● C-connector:
(C/C0*/C1/C2/C2*/C3)

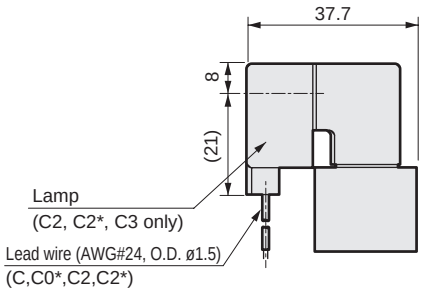

● D-connector:
(D/D0*/D1/D2/D2*/D3)

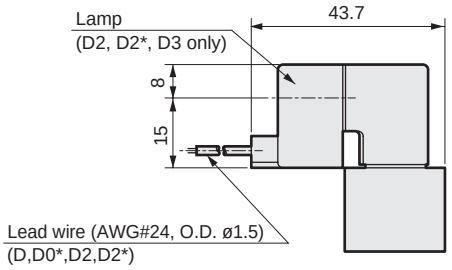

● Compact terminal box with lamp: (L)
With lamp and surge suppressor: (LS)

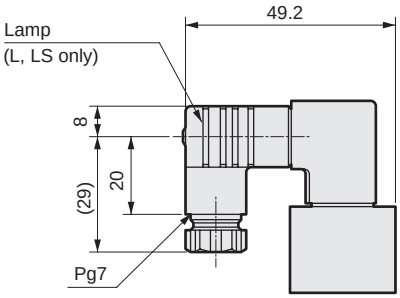

● L-bracket: (L) Material: Stainless steel
(Trivalent) chrome plating

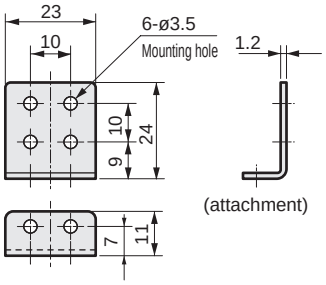

Dimensions CAD

B512 2/6

● 2-port: grommet lead wire

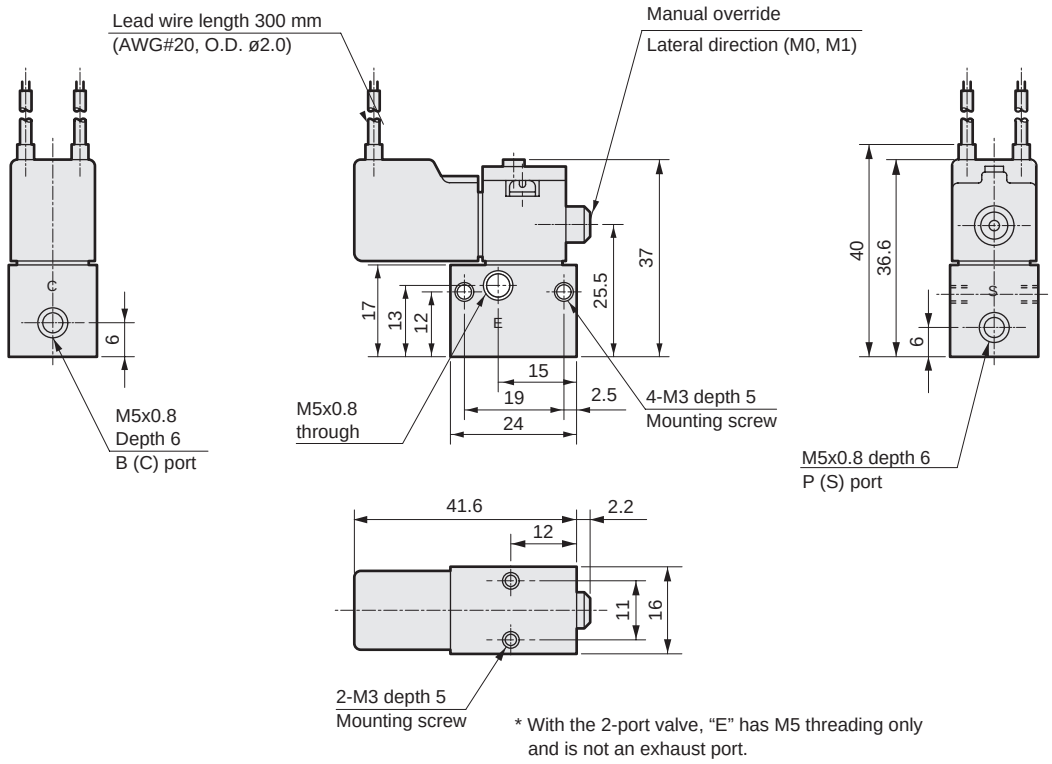

* With the 2-port valve, "E" has M5 threading only and is not an exhaust port.

B513 2/6

● 3-port valve: grommet lead wire

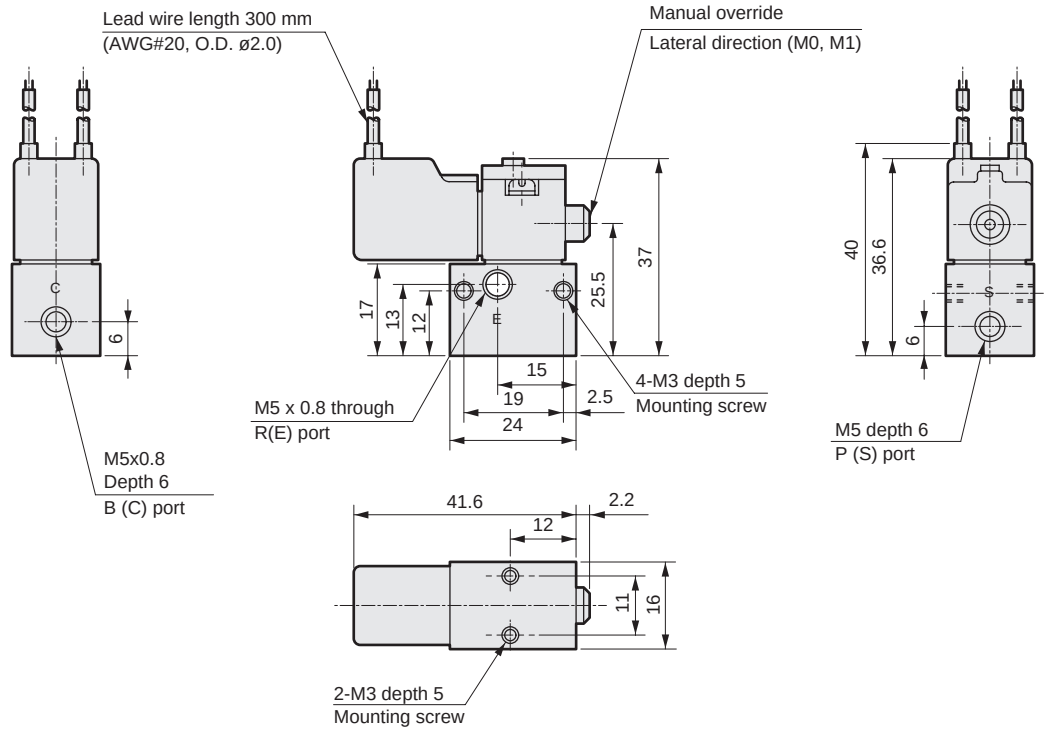

Dimensions CAD

● Non-locking manual override upward direction: (M6)

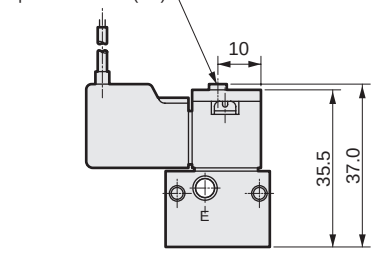

● Compact terminal box: (B)

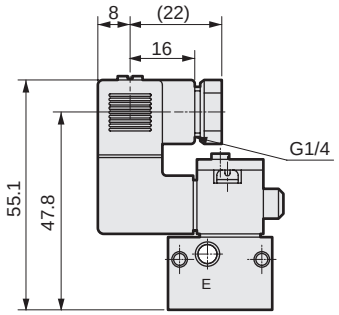

● C-connector:
(C/C0*/C1/C2/C2*/C3)

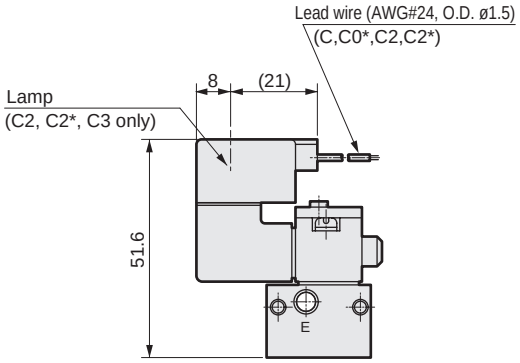

● D-connector:
(D/D0*/D1/D2/D2*/D3)

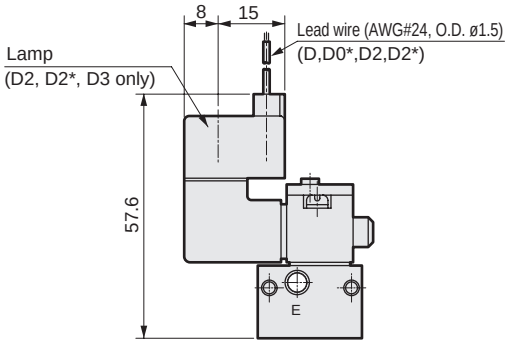

● Compact terminal box with lamp: (L)
With surge suppressor and indicator lamp: (LS)

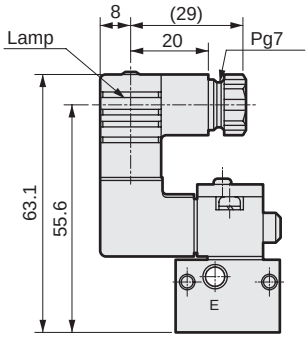

● Port size Rc 1/8: (06)

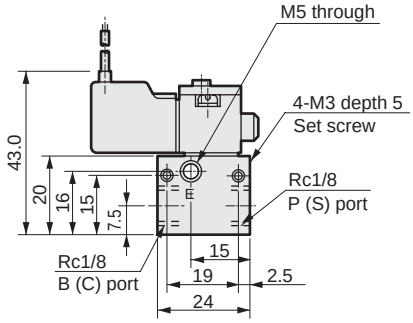

● U type bracket: (U) Material: Stainless steel (Trivalent) chrome plating

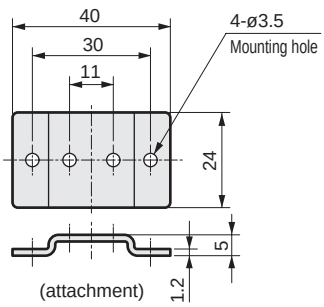

Dimensions CAD

W2P513

● Grommet lead wire

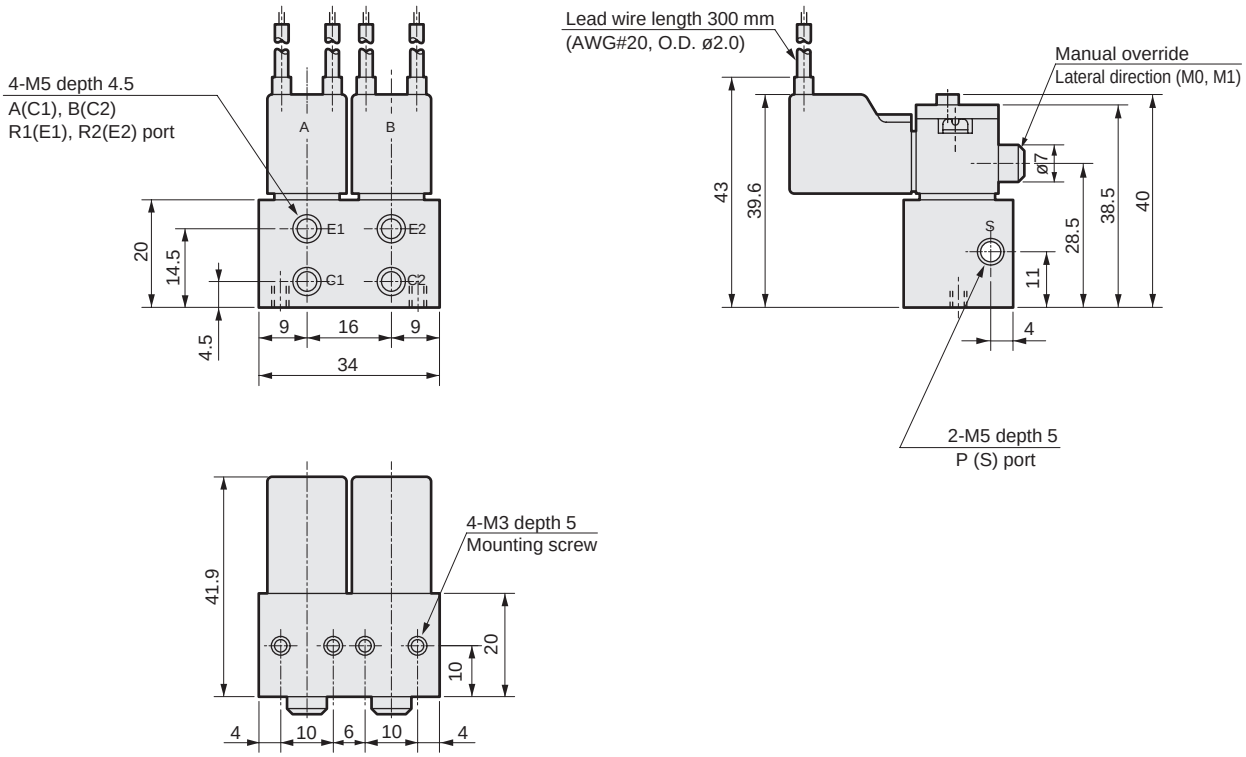

Dimensions CAD

● Non-locking manual override upward direction: (M6)

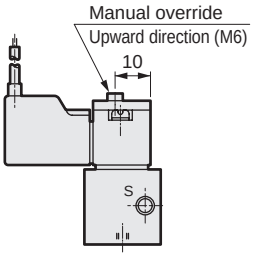

● Compact terminal box: (B)

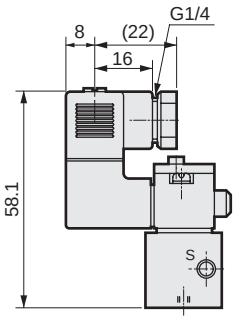

● C-connector:
(C/C0*/C1/C2/C2*/C3)

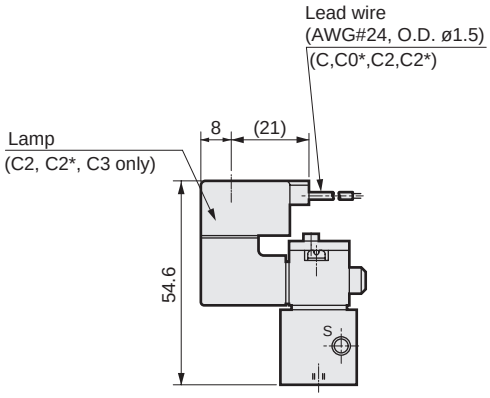

● D-connector:
(D/D0*/D1/D2/D2*/D3)

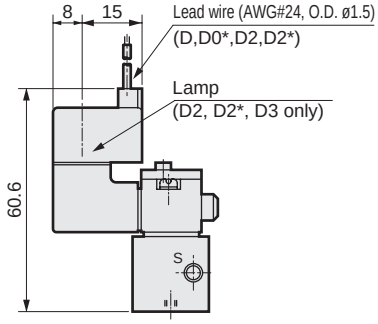

● Compact terminal box with lamp: (L)
With surge suppressor and indicator lamp: (LS)

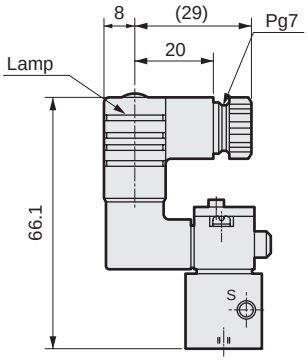

Dimensions CAD

P5142

● Pilot: grommet lead wire

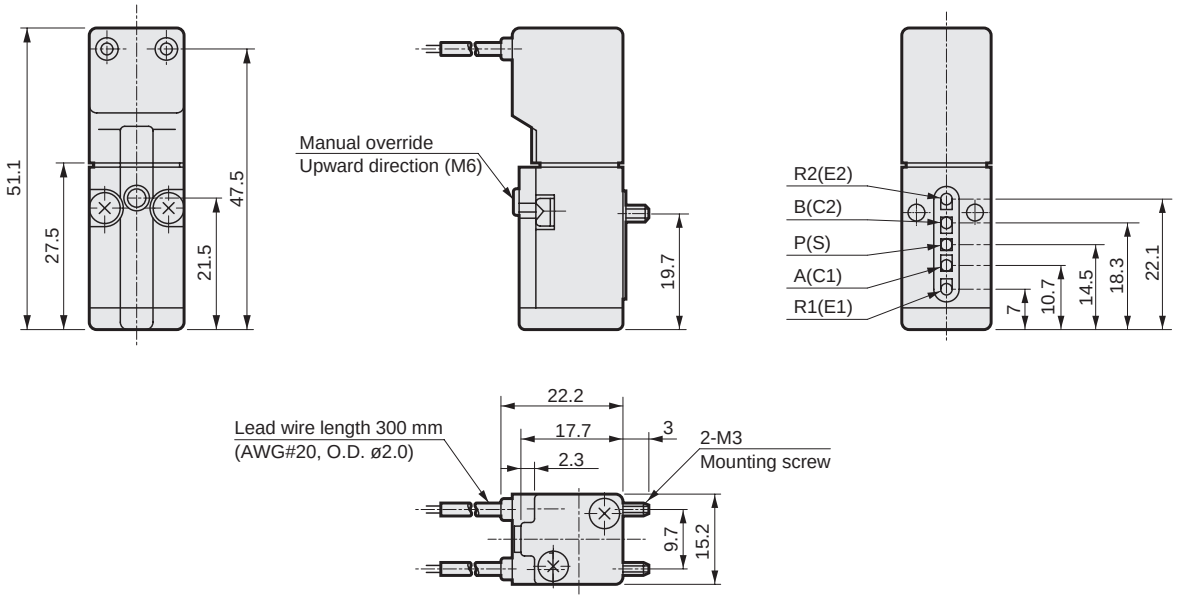

● Compact terminal box: (B)

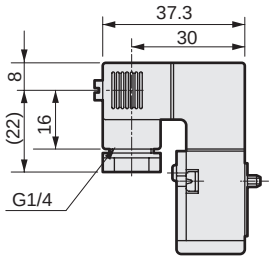

● C-connector:
(C/C0*/C1/C2/C2*/C3)

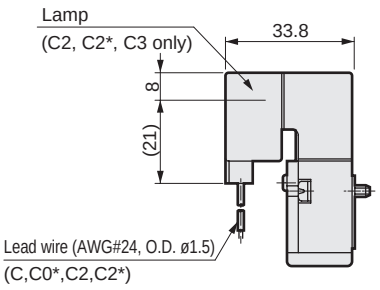

● D-connector:
(D/D0*/D1/D2/D2*/D3)

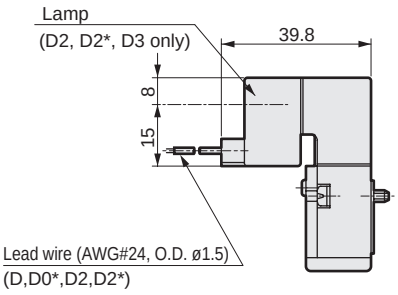

● Compact terminal box with lamp: (L)
With surge suppressor and indicator lamp: (LS)

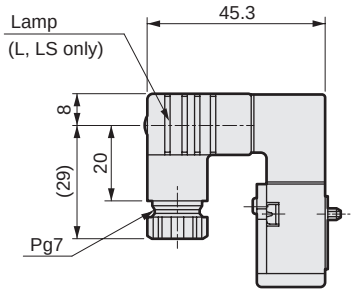

Dimensions CAD

B5142

● Sub-base: grommet lead wire

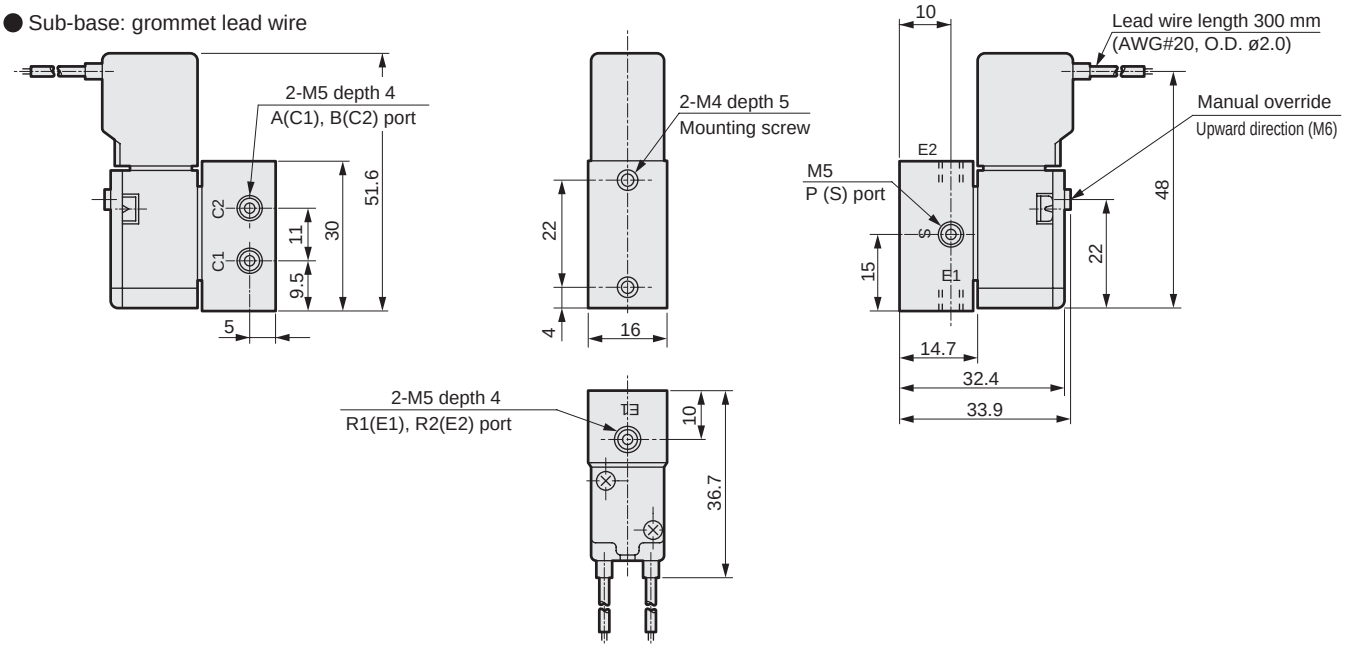

● Compact terminal box: (B)

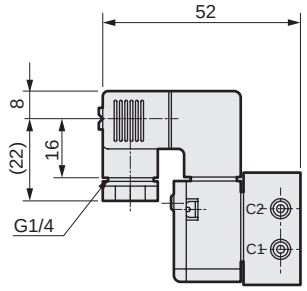

● C-connector:
(C/C0*/C1/C2/C2*/C3)

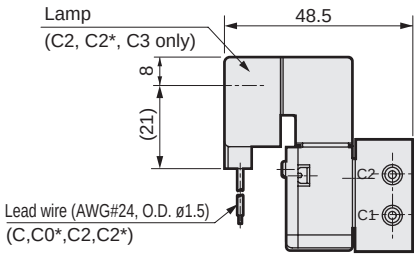

● D-connector:
(D/D0*/D1/D2/D2*/D3)

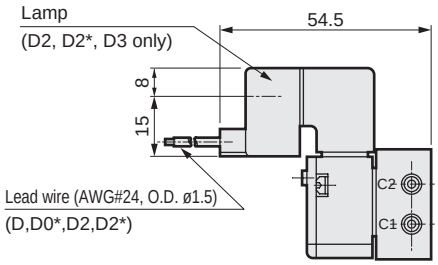

● Compact terminal box with lamp: (L)
With surge suppressor and indicator lamp: (LS)

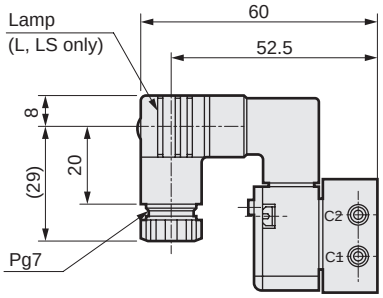

● Port size Rc1/8: (06)

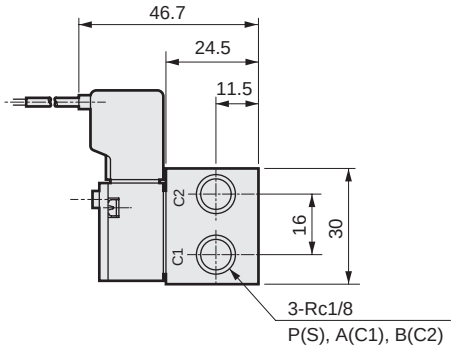

* The width of the sub-plate is 19.

● U type bracket: (U) Material: Stainless steel (Trivalent) chrome plating

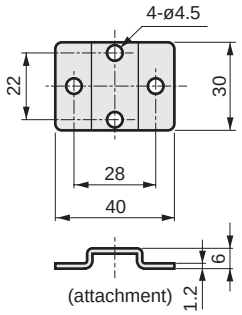



Individual wiring manifold
Pilot operated 2, 3, 5-port miniature pneumatic valve

B*P51* Series

● Cylinder bore size: ø6 to ø16

Refer to the Ending for details.

JIS symbol

● 2-port valve

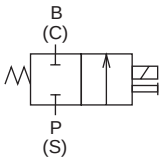

● 3-port valve

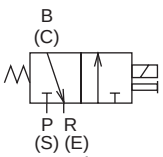

● 5-port valve
2-position single

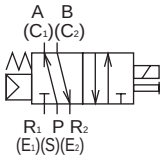

Common specifications

Item	Description
Manifold method	Manifold integrated
Manifold	Common supply, common exhaust
Station No.	2 to 10 stations
Valve and operation	Pilot operated poppet valve
Working fluid	Compressed air/low vacuum
Max. working pressure MPa	Refer to Individual specifications listed below
Min. working pressure MPa	Refer to Individual specifications listed below
Proof pressure MPa	Refer to Individual specifications listed below
Ambient temperature °C	-10 to 50 (no freezing)
Fluid temperature °C	5 to 50
Lubrication	Not required
Degree of protection	Dust-proof
Vibration resistance m/s^2	50 or less
Shock resistance m/s^2	300 or less
Atmosphere	Cannot be used in corrosive gas environment.

Electrical specifications

Item			Description
Rated voltage V	AC		100, 200(50 / 60Hz)
	DC		12, 24
Voltage fluctuation range			±10%
Starting current A	AC	100 V	0.056 / 0.044
		200 V	0.034 / 0.026
	DC	12 V	0.150
		24 V	0.075
Holding current A	AC	100 V	0.028 / 0.022
		200 V	0.017 / 0.013
	DC	12 V	0.150
		24 V	0.075
Power consumption W ( ):With indicator lamp	AC	100 V	1.8/1.4 (2.0/1.6)
		200 V	2.1/1.6 (2.0/1.8)
	DC	12 V	1.8(2.0)
		24 V	1.8(2.0)
Thermal class			B (molded coil)
Temperature rise °C			45

Reference: 100 VAC 50/60 Hz can be used with a rated voltage of 110 VAC 60 Hz and 200 VAC 50/60 Hz can be used with 220 VAC 60 Hz.

Individual specifications

Item	2-port valve		3-port valve		5-port valve
	P5122	P5126	P5132	P5136	P5142
Max. working pressure MPa	1.0	0.6	1.0	0.6	0.7
Min. working pressure MPa	0.1	0.1 (*2)	0.1	0.1 *2	0.15
Proof pressure MPa	1.5	1.5	1.5	1.5	1.05
Orifice mm	ø1.2	ø1.6	ø1.2	ø1.6	ø1.2
Response time (*1) ms	30 or less		30 or less		60 or less
Weight (n: station No.) g	57xn+1				83×n+5

*1: The response time is the value at 0.5 MPa supply pressure, with no lubrication, and with the power ON. It depends on the pressure and the lubricant quality.
*2: When specifying the pressure classification V (for low pressure, for low vacuum pressure), the units can be used with low pressure (0 to 0.29 MPa) or low vacuum (3.3 to 101.0 O kPa (abs) {25 to 760 Torr}).

[Mix manifold]

● How to list combination content

When selecting a combination manifold (write 8 from Ⓒ), list the code (refer to table on right) for required functions and the arrangement No. (numbering up to specified station No. with left side as 1) in the field for remarks below the normal model No. display as shown in the example.

Note: 2, 3-port valve and 5-port valve mix manifold is not available.

Code	Function
M2	2-port valve
M3	3-port valve
M4	5-port valve
MP	Masking plate

1	2	3	4	5
2-port valve	3-port valve	3-port valve	3-port valve	Masking Plate
(M2)	(M3)	(M3)	(M3)	(MP)

Example

The model No. when using a combination manifold of 5 stations with an arrangement such as that in the arrangement shown at left with an orifice of ø1.2 and a voltage of 200 VAC is **B5P5182-M6E-M5-AC200V**

	M2	M3	M4	MP
-	1	3	0	1

(M2= 1, M3=2 to 4, MP=5)
Enter the quantity to be used after the model No. Even when none are to be used, enter 0.

Flow characteristics

Model No.	Solenoid position	C[dm³/(s·bar)]	b
P5122	2-port	0.11	0.15
P5126		0.15	0.18

Model No.	Solenoid position	P→B		B→R	
		C[dm³/(s·bar)]	b	C[dm³/(s·bar)]	b
P5132	3-port	0.11	0.15	0.15	0.34
P5136		0.15	0.18	0.15	0.29

Model No.	Solenoid position	P→A/B		A/B→R1/R2	
		C[dm³/(s·bar)]	b	C[dm³/(s·bar)]	b
P5142	5-port	0.09	0.23	0.13	0.18

*1: Effective cross-sectional area S and sonic conductance C are converted as S ≈ 5.0 x C.

CE marking specifications

** - Voltage - **ST**

• Standard voltage of 24 VDC or less is CE marking-compatible even if the model No. is not indicated with "ST".

Copper and PTFE free specifications

● Copper- and PTFE-based materials are not used in the flow path.

** - Voltage - **P6**

How to order manifold

B 7 P51 8 2 - M6 B ◯ - M5 - ◯ ◯ - DC24V - 1 5 0 1

Indicate the valve function based quantity display position for when using a mix manifold. Refer to page 1654.

Ⓐ Model No.

Ⓑ Station No.

Ⓒ Solenoid valve *1

Ⓓ Orifice *2

Ⓔ Manual override

Ⓕ Electrical connections

Note: Refer to page 1637 for the circuit diagram with a surge suppressor/lamp.

Ⓖ Pressure classification

Ⓗ Port size

Ⓘ Other options

Ⓙ Bracket

Ⓚ Voltage

Code	Description	Ⓐ Model No. B*P 512	B*P 513	B*P 514
Ⓑ Station No.				
2	2 stations	●	●	●
to	to			
10	10 stations			
Ⓒ Solenoid valve				
2	2-port valve	●		
3	3-port valve		●	
4	5-port valve			●
8	Mix manifold *2 (when there are multiple solenoid positions)	●	●	
Ⓓ Orifice				
2	ø1.2	●	●	●
6	ø1.6	●	●	
Ⓔ Manual override				
M0	Lateral non-locking(Standard) *4	●	●	
M1	Lateral locking(Option) *4	●	●	
M4	Dust cover equipped non-locking	●	●	
M6	Upward non-locking(Standard)	●	●	●
N	Without manual override(Option)	●	●	●
Ⓕ Electrical connections				
	Refer to the next page for electrical connections.			
Ⓖ Pressure classification				
Blank	Standard	●	●	●
V	For low pressure/low vacuum *6	●	●	
Ⓗ Port size				
M5	M5 (Standard)	●	●	●
06	Rc1/8 (optional)	●	●	●
Ⓘ Other options				
Blank	No	●	●	●
S	Surge suppressor included *7,8	●	●	●
X	Continuous energization (made to order)			●
Ⓙ Bracket				
Blank	No	●	●	●
L	L-bracket included	●	●	●
Ⓚ Voltage				
AC100V	Standard: 100 VAC 50/60 Hz	●	●	●
AC200V	Standard: 200 VAC 50/60 Hz	●	●	●
DC24V	Standard: 24 VDC	●	●	●
DC12V	Standard: 12 VDC	●	●	●
AC110V	Option: 110 VAC 50/60 Hz	●	●	●
AC220V	Option: 220 VAC 50/60 Hz	●	●	●
*** Other made-to-order products**				
AC24V		●	●	●
AC48V		●	●	●
DC6V		●	●	●
DC48V		●	●	●

⚠ Precautions for model No. selection

*1: Contact CKD when using the units with a common air supply and individual exhaust. Orifice mixtures are available as made to order.

*2: Mix manifold of 2, 3-port valve and 5-port valve is not available.

*3: Use orifice 2 when only using 5-port valves. Use the orifice selected with the 3-port valve when using a mixture of 2 and 3-port valves.

*4: M0 (lateral direction non-locking) and M1 (lateral direction locking) are not available with pressure classification V (for low pressure, for low vacuum pressure).

*6: When pressure classification V (for low pressure/for low vacuum pressure) has been specified, the orifice will be "6". Draw in the vacuum from port P (S). When using at low pressure, supply from port P(S).

*7: The unit is a suppression connector for 24 VDC or less.

*8: The surge suppressor can only be selected when the grommet lead wire or compact terminal box "B" has been selected for the electrical connections.

[Example of model No.]

B5P5142-M6E-M5-AC200V

5-port valve manifold
Common air supply/common exhaust

- Ⓑ Station No. : 5 stations
- Ⓒ Solenoid valve : 5-port valve
- Ⓓ Orifice : ø1.2
- Ⓔ Manual override : Upward non-locking
- Ⓕ Electrical connections : Grommet lead wire
- Ⓗ Port size : M5
- Ⓘ Other options : None
- Ⓙ Bracket : None
- Ⓚ Voltage : 200 VAC

(Electrical connection list)

Code		Description	Ⓐ Model No. B*P 512	B*P 513	B*P 514
Ⓕ Electrical connections					
E	Standard	Grommet lead wire(300 mm)	●	●	●
B	Standard	Compact terminal box	●	●	●
C-connector (lead wire lateral direction)					
C	Std.	Lead wire length(300 mm)	●	●	●
C00	Option	Lead wire length(500 mm)	●	●	●
C01	Option	Lead wire length(1000 mm)	●	●	●
C02	Option	Lead wire length(2000 mm)	●	●	●
C03	Option	Lead wire length(3000 mm)	●	●	●
C1	Option	Without lead wire	●	●	●
C2	Option	Lead wire length(300 mm) with surge suppressor and indicator lamp	●	●	●
C20	Option	Lead wire length(500 mm) with surge suppressor and indicator lamp	●	●	●
C21	Option	Lead wire length(1000 mm) with surge suppressor and indicator lamp	●	●	●
C22	Option	Lead wire length(2000 mm) with surge suppressor and indicator lamp	●	●	●
C23	Option	Lead wire length(3000 mm) with surge suppressor and indicator lamp	●	●	●
C3	Option	Without lead wire with surge suppressor and indicator lamp	●	●	●
D-connector (lead wire upward direction)					
D	Option	Lead wire length(300 mm)	●	●	●
D00	Option	Lead wire length(500 mm)	●	●	●
D01	Option	Lead wire length(1000 mm)	●	●	●
D02	Option	Lead wire length(2000 mm)	●	●	●
D03	Option	Lead wire length(3000 mm)	●	●	●
D1	Option	Without lead wire	●	●	●
D2	Option	Lead wire length(300 mm) with surge suppressor and indicator lamp	●	●	●
D20	Option	Lead wire length(500 mm) with surge suppressor and indicator lamp	●	●	●
D21	Option	Lead wire length(1000 mm) with surge suppressor and indicator lamp	●	●	●
D22	Option	Lead wire length(2000 mm) with surge suppressor and indicator lamp	●	●	●
D23	Option	Lead wire length(3000 mm) with surge suppressor and indicator lamp	●	●	●
D3	Option	Without lead wire with surge suppressor and indicator lamp	●	●	●
Compact terminal box					
L	Option	Without lead wire With indicator lamp	●	●	●
LS	Option	Without lead wire with surge suppressor and indicator lamp	●	●	●

*5: With DC voltage, L is equipped with a surge suppressor

Dimensions CAD

B*P51$^{2}_{3}$

● Grommet lead wire

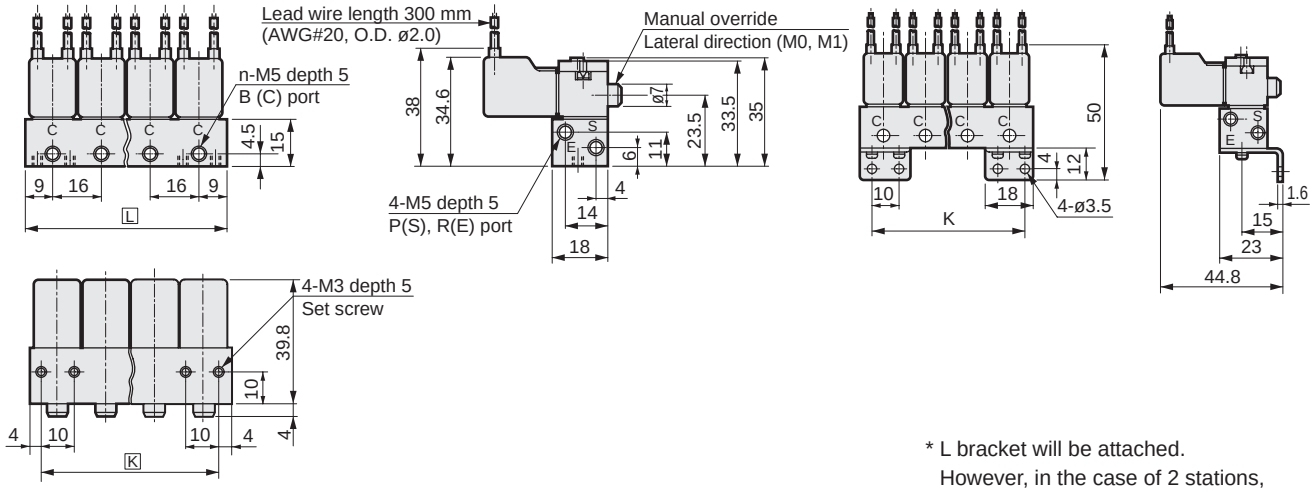

● L-bracket: (L) Material: Stainless steel (Trivalent) chrome plating

* L bracket will be attached. However, in the case of 2 stations, the installation of the bracket can only be on either the left or right.

Station No.	2	3	4	5	6	7	8	9	10
K	26	42	58	74	90	106	122	138	154
L	34	50	66	82	98	114	130	146	162

● Non-locking manual override upward direction

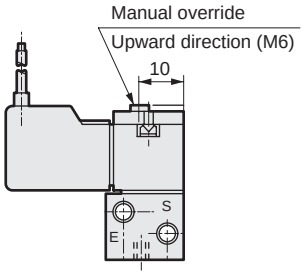

● Compact terminal box: (B)

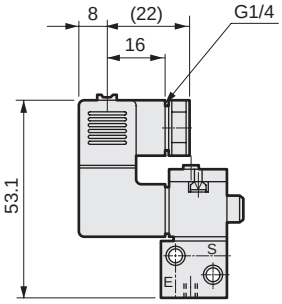

● C-connector: (C/C0*/C1/C2/C2*/C3)

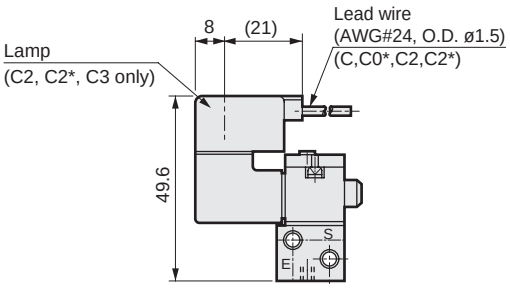

● D-connector: (D/D0*/D1/D2/D2*/D3)

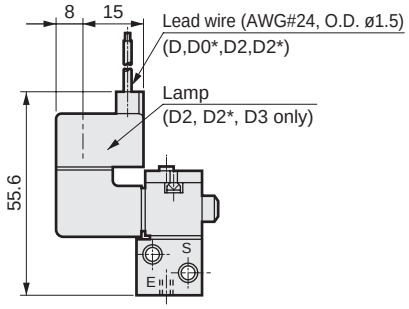

● Compact terminal box with lamp: (L)
With surge suppressor and indicator lamp: (LS)

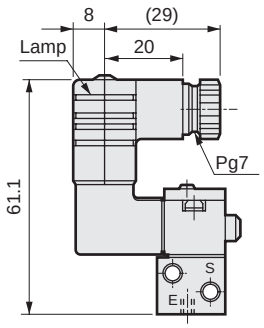

● Port size Rc1/8: (06)

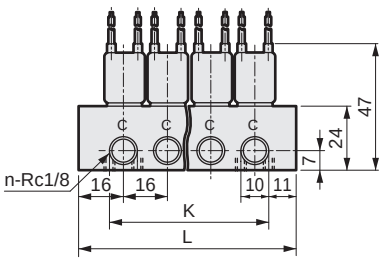

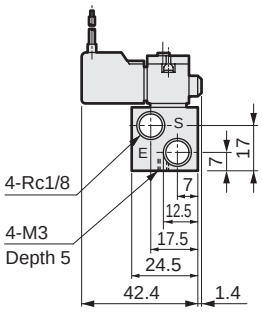

Station No.	2	3	4	5	6	7	8	9	10
K	26	42	58	74	90	106	122	138	154
L	48	64	80	96	112	128	144	160	176

Dimensions CAD

B*P514

● Grommet lead wire

* With B*P518 (mix manifold), 2-port valves and 3-port valves will be mounted on the manifold base of B*P514.

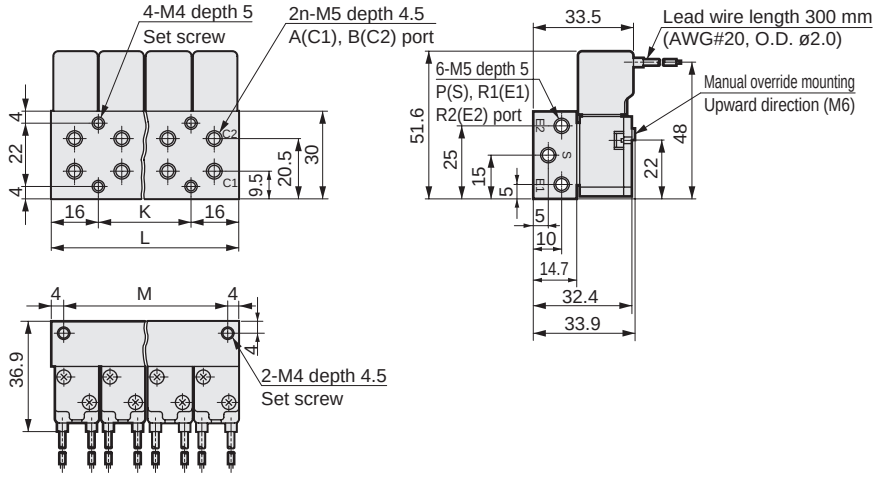

● L-bracket: (L)

Material: Stainless steel (Trivalent) chrome plating

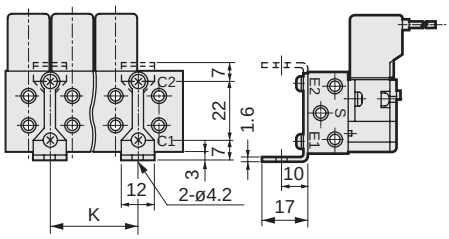

* L bracket will be attached.

Station No.	2	3	4	5	6	7	8	9	10
K	0	16	32	48	64	80	96	112	128
L	32	48	64	80	96	112	128	144	160
M	24	40	56	72	88	104	120	136	152

● Compact terminal box: (B)

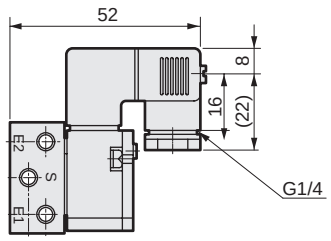

●C-connector: (C/C0*/C1/C2/C2*/C3)

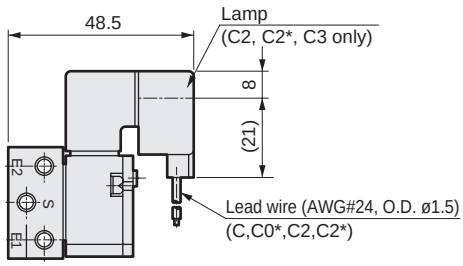

● D-connector: (D/D0*/D1/D2/D2*/D3)

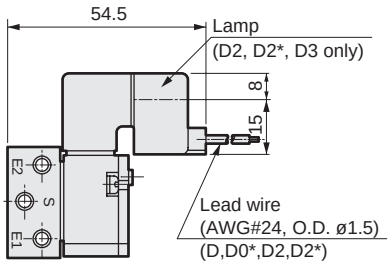

● Compact terminal box with lamp: (L)
With surge suppressor and indicator lamp: (LS)

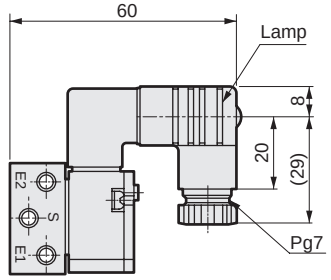

● Port size Rc1/8: (06)

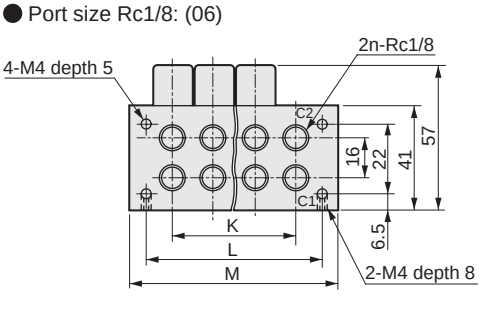

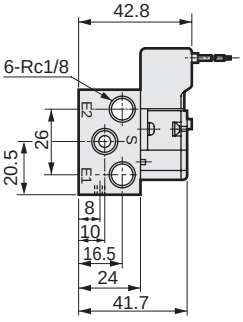

Station No.	2	3	4	5	6	7	8	9	10
K	16	32	48	68	80	96	112	128	144
L	36	52	68	84	100	116	132	148	164
M	48	64	80	96	112	128	144	160	176



Block manifold
Pilot operated 2, 3, 5-port valve miniature pneumatic valve

N*P51* Series

● Cylinder bore size: ø6 to ø16

CE Refer to the Ending for details. RoHS CAD

JIS symbol

● 2-port valve

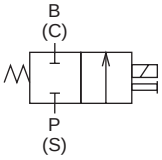

● 3-port valve

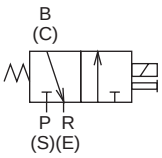

● 5-port valve
2-position single

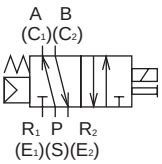

Common specifications

Item	Description
Manifold method	Manifold block system (DIN rail mount)
Manifold	Common supply/common exhaust
Station No.	2 to 25 stations
Valve and operation	Pilot operated poppet valve
Working fluid	Compressed air/low vacuum
Max. working pressure MPa	Refer to Individual specifications listed below
Min. working pressure MPa	Refer to Individual specifications listed below
Proof pressure MPa	1.5 (≈220 psi, 15 bar) (*1)
Ambient temperature °C	-10 (14°F) to 40 (104°F) (no freezing)
Fluid temperature °C	5 (41°F) to 40 (104°F)
Lubrication	Not required
Degree of protection	Dust-proof
Vibration resistance m/s^2	50 or less
Shock resistance m/s^2	300 or less
Atmosphere	Cannot be used in corrosive gas environment.

*1: P5142 will be 1.05 MPa.

Electrical specifications

Item			Description
Rated voltage V	AC		100, 200 (50/60 Hz)
	DC		12, 24
Voltage fluctuation range			±10%
Starting current A	AC	100 V	0.056 / 0.044
		200 V	0.034 / 0.026
	DC	12 V	0.150
		24 V	0.075
Holding current A	AC	100 V	0.028 / 0.022
		200 V	0.017 / 0.013
	DC	12 V	0.150
		24 V	0.075
Power consumption W ( ): With indicator lamp	AC	100 V	1.8 / 1.4 (2.0/1.6)
		200 V	2.1 / 1.6 (2.3/1.8)
	DC	12 V	1.8(2.0)
		24 V	1.8(2.0)
Thermal class			B (molded coil)
Temperature rise °C			45 (113°F)

Reference: 100 VAC 50/60 Hz can be used with a rated voltage of 110 VAC 60 Hz and 200 VAC 50/60 Hz can be used with 220 VAC 60 Hz.

Performance/characteristics by model

1 MPa ≈ 145.0 psi, 1 MPa = 10 bar

Item	2-port valve		3-port valve		5-port valve
	P5122	P5126	P5132	P5136	P5142
Max. working pressure MPa	1.0	0.6	1.0	0.6	0.7 (≈100 psi, 7 bar)
Min. working pressure MPa	0.1	0.1 (*2)	0.1	0.1 *2	0.15 (≈22 psi, 1.5 bar)
Orifice mm	ø1.2	ø1.6	ø1.2	ø1.6	ø1.2
Response time *1 ms	30 or less		30 or less		60 or less

*1 : The response time is the value at 0.5 MPa supply pressure, with no lubrication, and with the power ON. It depends on the pressure and the lubricant quality.

*2 : When specifying the pressure classification V (for low pressure, for low vacuum pressure), the units can be used with low pressure (0 to 0.29 MPa) or low vacuum (3.3 to 101.00 kPa (abs) {25 to 760 Torr}).

Weight

Valve block (g)	N513*-UH4(SH4)	N5142-UH4(SH4)
	17	21
Supply block (g)	P□UH6	P□SH6
	25	34
Exhaust block (g)	R□UH6	R□SH6
	25	34
DIN rail (g) n: number of valve blocks, m: number of other blocks	13+3x(n+m)	

Flow characteristics

Model No.	Solenoid position	C[dm³/(s·bar)]	b
P5122	2-port	0.11	0.15
P5126		0.15	0.18

Model No.	Solenoid position	P→B		B→R	
		C[dm³/(s·bar)]	b	C[dm³/(s·bar)]	b
P5132	3-port	0.11	0.15	0.15	0.34
P5136		0.15	0.18	0.15	0.29

Model No.	Solenoid position	P→A/B		A/B→R1/R2	
		C[dm³/(s·bar)]	b	C[dm³/(s·bar)]	b
P5142	5-port	0.09	0.23	0.13	0.18

*1: Effective cross-sectional area S and sonic conductance C are converted as S ≈ 5.0 x C.

CE marking specifications

** - Voltage - **ST**

- Standard voltage of 24 VDC or less is CE marking-compatible even if the model No. is not indicated with "ST".

Copper and PTFE free specifications

● Copper- and PTFE-based materials are not used in the flow path.

** - Voltage - **P6**

How to order block manifold

N 7 P51 3 2 - M6 B ( ) ( ) - ( ) - AC100V

Note Be sure to fill in the "Manifold specifications sheet" (page 1670).

Ⓐ Model No.

Ⓑ Station No.

Ⓒ Solenoid valve *2

Ⓓ Orifice *3

Ⓔ Manual override

Ⓕ Electrical connections

Note Refer to page 1637 for the circuit diagram with a surge suppressor/lamp.

Ⓖ Pressure classification

Ⓗ Coil direction

Ⓘ Other options

Ⓙ Voltage

Code	Description	Ⓐ Model No. 2-port N*P 512	3-port N*P 513	5-port N*P 514
Ⓑ Station No.				
2	2 stations	●	●	●
to	to			
25	25 stations *1			
Ⓒ Solenoid valve				
2	2-port valve	●		
3	3-port valve		●	
4	5-port valve			●
8	Mix manifold (when there are multiple solenoid positions)	●	●	●
Ⓓ Orifice				
2	ø1.2	●	●	●
6	ø1.6	●	●	
Ⓔ Manual override				
M0	Lateral non-locking (standard) *4	●	●	
M1	Lateral locking (option) *4	●	●	
M4	Dust cover equipped non-locking	●	●	
M6	Upward non-locking (standard)	●	●	●
N	No manual override (option)	●	●	●
Ⓕ Electrical connections				
	Refer to the next page for electrical connections.			
Ⓖ Pressure classification				
Blank	Standard	●	●	●
V	For low pressure and low vacuum *6	●	●	
Ⓗ Coil direction				
Blank	Standard direction	●	●	●
R	180° rotation direction *7	●	●	●
Ⓘ Other options				
Blank	None	●	●	●
S	Surge suppressor attached *8	●	●	●
X	Continuous energization (custom order)			●
Ⓙ Voltage				
AC100V	Standard: 100 VAC 50/60 Hz	●	●	●
AC200V	Standard: 200 VAC 50/60 Hz	●	●	●
DC24V	Standard: 24 VDC	●	●	●
DC12V	Standard: 12 VDC	●	●	●
AC110V	Option: 110 VAC 50/60 Hz	●	●	●
AC220V	Option: 220 VAC 50/60 Hz	●	●	●
*** Other custom order products**				
AC24V		●	●	●
AC48V		●	●	●
DC6V		●	●	●
DC48V		●	●	●

⚠ Precautions for model No. selection

*1 : The max. station No. is 25.
*2 : Use orifice 2 when only using 5-port valves. Use the orifice selected with the 3-port valve when using a mixture of 2, 3-port valves.
*3 : Orifice mixtures of 2, 3-port valves are available as a custom order product.
*4 : M0 (lateral direction non-locking) and M1 (lateral direction locking) are not available with pressure classification V (for low pressure, for low vacuum).
*6 : When pressure classification V (for low pressure/for low vacuum pressure) has been specified, the orifice will be "6". Draw in the vacuum from P(S) port. Pressure classification V (for low pressure, low vacuum pressure) is not available with 5-port valves. When using at low pressure, supply from the P(S) port.
*7 : In cases when coil direction R (180° rotation direction) has been specified, electrical connections will be standardly supported with only E. Consult with CKD for other electrical connections.
*8 : The surge suppressor can only be selected when the grommet lead wire or compact terminal box "B" has been selected for the electrical connections.

[Example of model No.]

N7P5132-M0B-S-AC100V

Miniature pneumatic valve block manifold

Ⓑ Station No.	: 7 stations
Ⓒ Solenoid valve	: 3-port valve
Ⓓ Orifice	: ø1.2
Ⓔ Manual override	: Lateral non-locking
Ⓕ Electrical connections	: Compact terminal box
Ⓖ Pressure classification	: Standard
Ⓗ Coil direction	: Standard direction
Ⓘ Other options	: Surge suppressor attached
Ⓙ Voltage	: 100 VAC

[Electrical connection list]

Code		Description		Ⓐ Model No. 2-port N*P 512	3-port N*P 513	5-port N*P 514
Ⓕ Electrical connections						
E	Standard	Grommet lead wire (300 mm)		●	●	●
B		Compact terminal box		●	●	●
C-connector (lead wire lateral direction)						
C	Std.	Lead wire length (300 mm)		●	●	●
C00	Option	Lead wire length (500 mm)		●	●	●
C01		Lead wire length (1000 mm)		●	●	●
C02		Lead wire length (2000 mm)		●	●	●
C03		Lead wire length (3000 mm)		●	●	●
C1		Without lead wire		●	●	●
C2		Lead wire length (300 mm)	with surge suppressor and indicator lamp	●	●	●
C20		Lead wire length (500 mm)	with surge suppressor and indicator lamp	●	●	●
C21		Lead wire length (1000 mm)	with surge suppressor and indicator lamp	●	●	●
C22		Lead wire length (2000 mm)	with surge suppressor and indicator lamp	●	●	●
C23		Lead wire length (3000 mm)	with surge suppressor and indicator lamp	●	●	●
C3		Without lead wire	with surge suppressor and indicator lamp	●	●	●
D-connector (lead wire upward direction)						
D	Option	Lead wire length (300 mm)		●	●	●
D00		Lead wire length (500 mm)		●	●	●
D01		Lead wire length (1000 mm)		●	●	●
D02		Lead wire length (2000 mm)		●	●	●
D03		Lead wire length (3000 mm)		●	●	●
D1		Without lead wire		●	●	●
D2		Lead wire length (300 mm)	with surge suppressor and indicator lamp	●	●	●
D20		Lead wire length (500 mm)	with surge suppressor and indicator lamp	●	●	●
D21		Lead wire length (1000 mm)	with surge suppressor and indicator lamp	●	●	●
D22		Lead wire length (2000 mm)	with surge suppressor and indicator lamp	●	●	●
D23		Lead wire length (3000 mm)	with surge suppressor and indicator lamp	●	●	●
D3		Without lead wire	with surge suppressor and indicator lamp	●	●	●
Compact terminal box						
L	Option	Without lead wire	with indicator lamp	●	●	●
LS		Without lead wire	with surge suppressor and indicator lamp	●	●	●

*5 : The DC voltage model of L is equipped with a surge suppressor.

Dimensions CAD

N*P51

● Push-in fitting upward piping: grommet lead wire

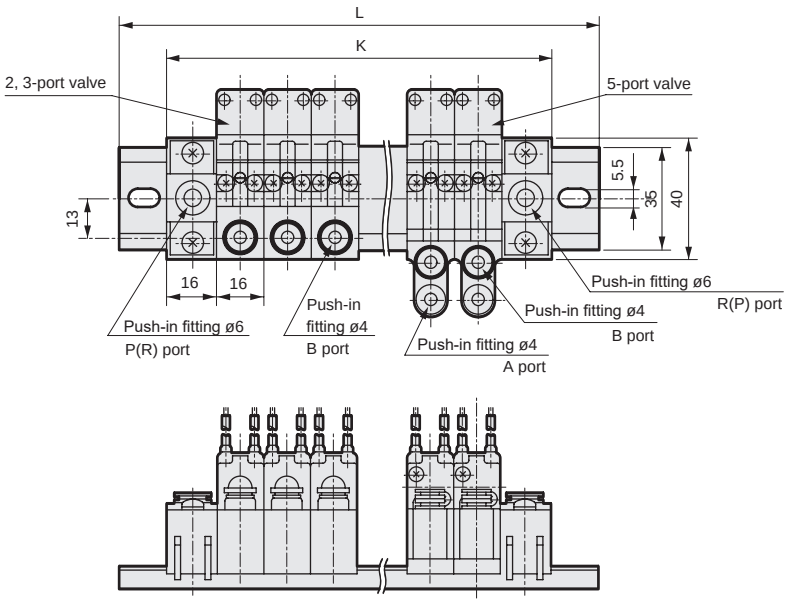

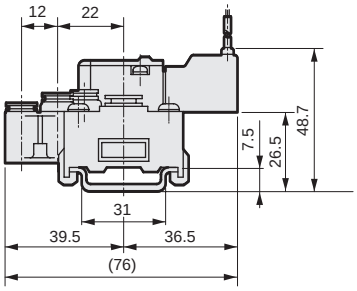

Station No.	1	2	3	4	5	6	7	8	9	10	11	12	13	14	15	16	17	18	19	20	21	22	23	24	25
K	48	64	80	96	112	128	144	160	176	192	208	224	240	256	272	288	304	320	336	352	368	384	400	416	432
L	80	96	112	128	144	160	176	192	208	224	240	256	272	288	304	320	336	352	368	384	400	416	432	448	464

● Compact terminal box: (B)

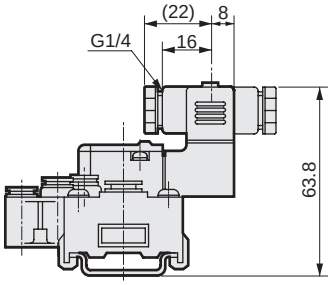

●C-connector: (C/C0*/C1/C2/C2*/C3)

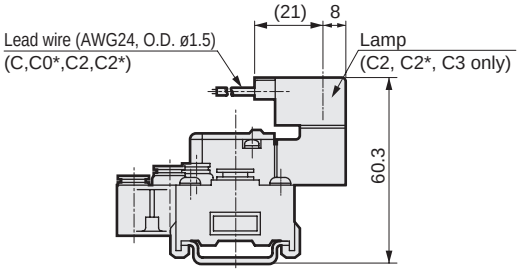

● D-connector: (D/D0*/D1/D2/D2*/D3)

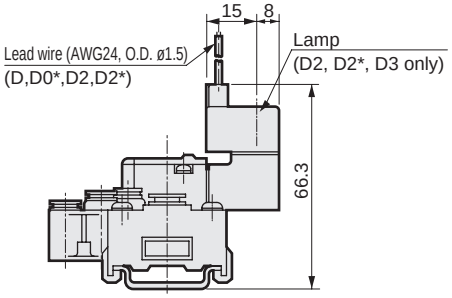

● Compact terminal box with lamp: (L)
With surge suppressor and indicator lamp: (LS)

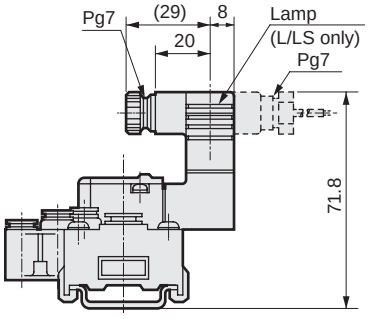

● Coil 180° rotation: (R)

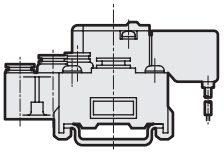

Dimensions CAD

N*P51

● Push-in fitting lateral piping: grommet lead wire

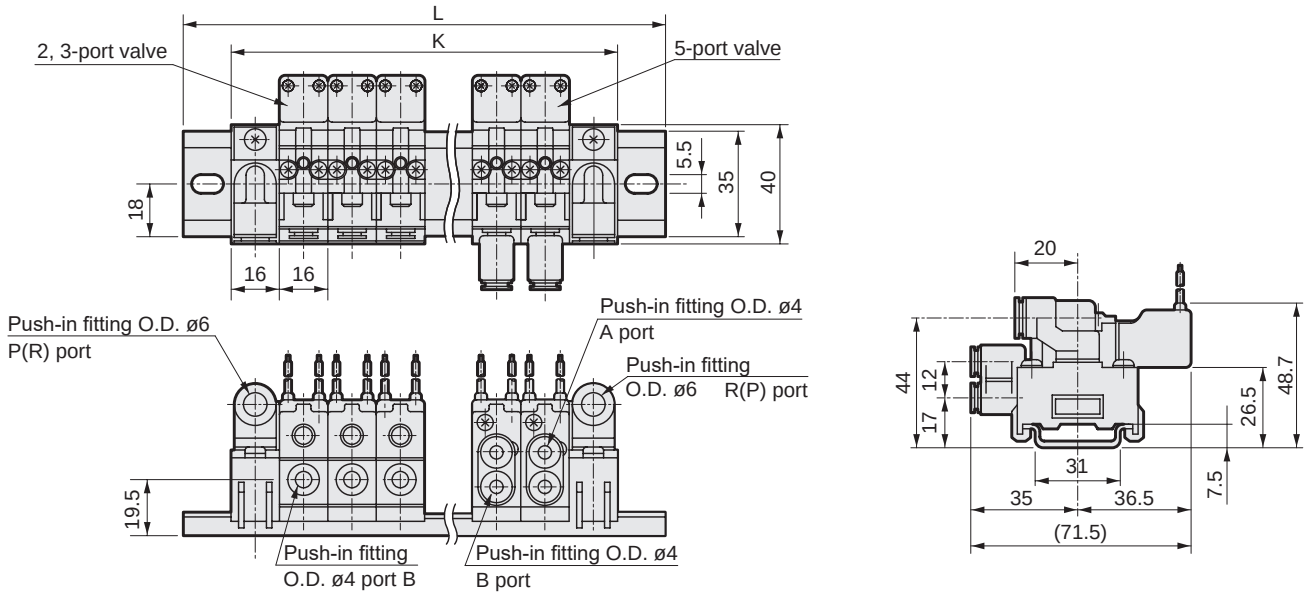

Station No.	1	2	3	4	5	6	7	8	9	10	11	12	13	14	15	16	17	18	19	20	21	22	23	24	25
K	48	64	80	96	112	128	144	160	176	192	208	224	240	256	272	288	304	320	336	352	368	384	400	416	432
L	80	96	112	128	144	160	176	192	208	224	240	256	272	288	304	320	336	352	368	384	400	416	432	448	464

● Compact terminal box: (B)

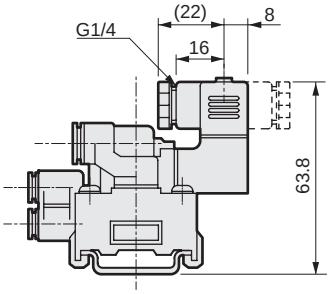

●C-connector: (C/C0*/C1/C2/C2*/C3)

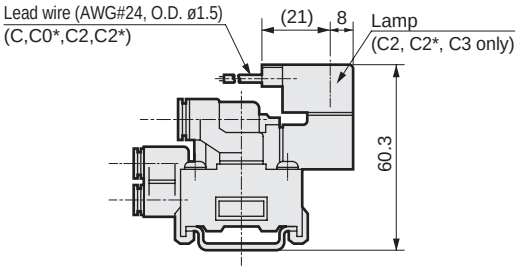

● D-connector: (D/D0*/D1/D2/D2*/D3)

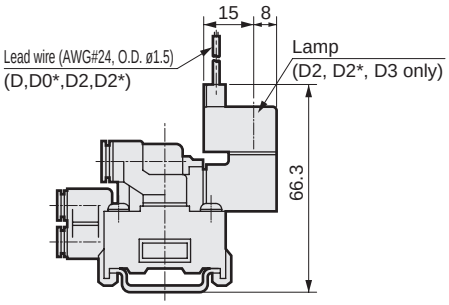

● Compact terminal box with lamp: (L)
With surge suppressor and indicator lamp: (LS)

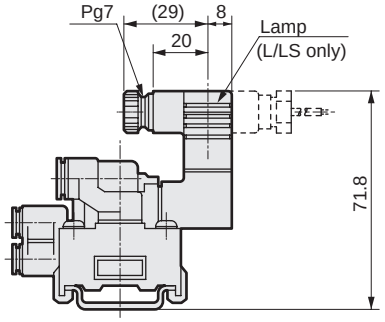

● Coil 180° rotation: (R)

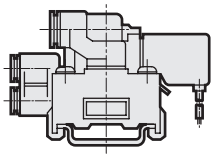

A Supply block (PL) (PR)

Left side mount

● N5132-PLUH6 ● N5132-PLSH6

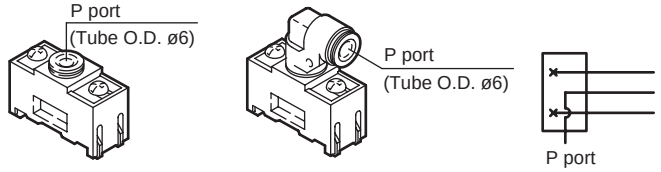

Right side mount

● N5132-PRUH6 ● N5132-PRSH6

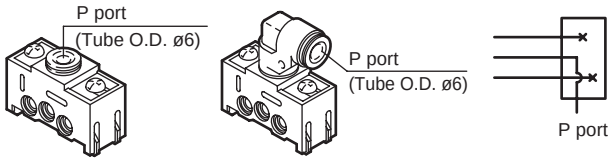

B Exhaust block (RL) (RR)

Left side mount

● N5132-RLUH6 ● N5132-RLSH6

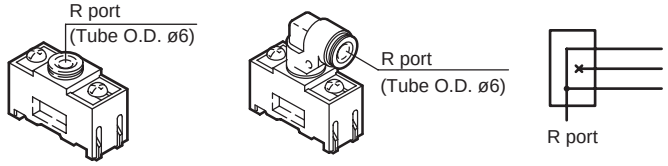

Right side mount

● N5132-RRUH6 ● N5132-RRSH6

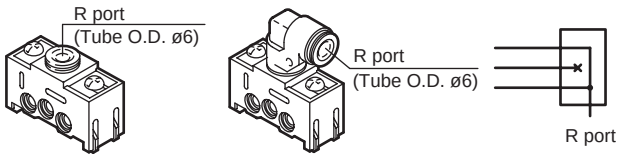

C Discrete sub-block for 2, 3-port valve (M3)

Upward piping

● N5132-M3UH4

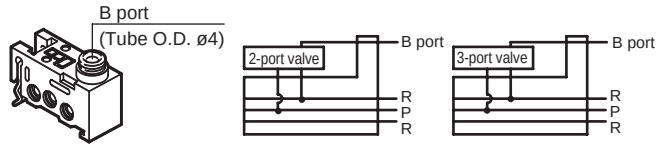

Side piping

● N5132-M3SH4

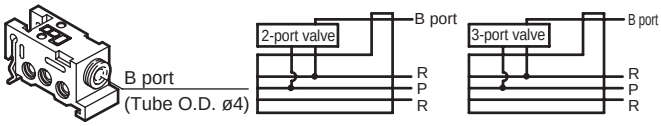

D Discrete sub-block for 5-port valve (**M4**)

Upward piping

● N5142-M4UH4

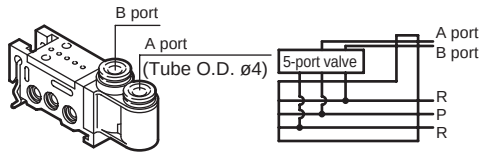

Side piping

● N5142-M4SH4

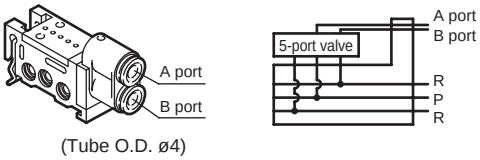

E Discrete solenoid valve for manifold (N51)

Discrete solenoid valve **N51 2 2 - M6 E ○○ — 00 — S - AC100V**

Sub-block with solenoid valve **N51 2 2 - M6 E ○○ - UH4 - S - AC100V**

- C Solenoid valve
- D Orifice
- E Manual override
- F Electrical connections
- G Pressure classification
- H Coil direction
- K Piping
- I Other options
- J Voltage

The model No. display details of C, D, etc. other than K are the same as "How to order block manifolds" on page 1662.

K Upward piping

UH4	Upward piping push-in fitting ø4
SH4	Side piping push-in fitting ø4
00	Without valve block

F Intermediate supply block (PM)

Upward piping	Side piping
● N5132-PMUH6	● N5132-PMSH6

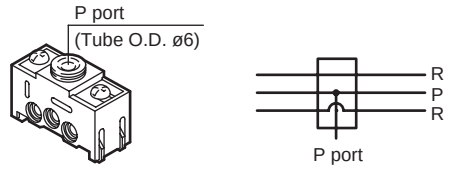

G Intermediate exhaust block (RM)

Upward piping	Side piping
● N5132-RMUH6	● N5132-RMSH6

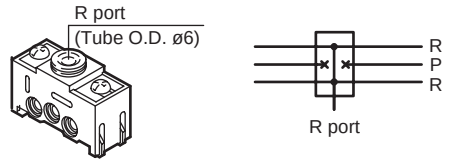

H Related products

● Mounting rail BAA

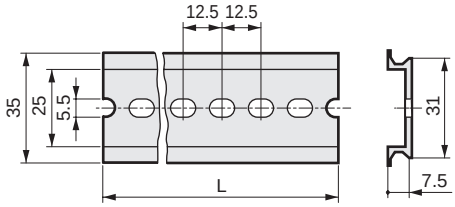

Model No.	L
BAA 500	500
BAA1000	1000

● Plug GWP4-B

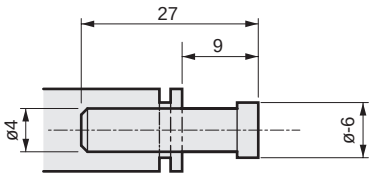

● Silencer: SLW-H6

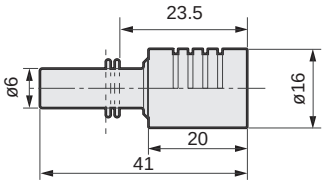

● Urethane tube

How to order

U-95 04

Urethane tube

A Compatible tube O.D. size	
04	ø4
06	ø6

* The O.D. tolerance is $^{+0.1\ mm}_{-0.15\ mm}$ or less.

● Soft nylon tube

How to order

F-15 04

Soft nylon tube

A Compatible tube O.D. size	
04	ø4
06	ø6

* The O.D. tolerance is within ±0.1 mm.

● New urethane tube

How to order

NU - 04

New urethane tube

A Compatible tube O.D. size	
04	ø4
06	ø6

* The O.D. tolerance is $^{+0.1\ mm}_{-0.15\ mm}$ or less.

⚠ CAUTION: Be sure to turn power OFF and release pressure before increasing or decreasing the manifolds.

N51 Series

Assembling the block manifold

(1) Fix the DIN rail. (Place the unit in as flat a location as possible)
(2) Install and fix one of the end plates (air supply or exhaust) onto the rail.
(3) For as many stations as necessary, install the sub-blocks and midway air supply (or exhaust) blocks in order onto the rail and slide to integrate.
(4) Install and fix the other end plate.
(5) Install the solenoid valve on the sub-block. (The solenoid valve is installed on the sub-block at shipment.)
(6) Perform wiring and piping to complete the work.

Mounting each sub-block

First hook the fixation claws onto the DIN rail and press the side with the movable claws (springs). Once installation onto the rail has been completed, slide towards the end plate side and press down so that there are no gaps.

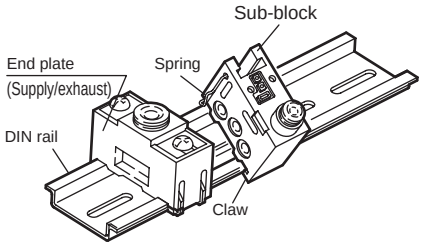

Removing the end plate

(1) Loosen the screws by 2 or 3 rotations and slide by 3 mm or more.
(2) Open the claws and remove.

Removing sub-blocks and intermediate blocks

(1) Loosen the screws of the end plate by 2 or 3 rotations and slide by 3 mm or more.
(2) Remove from the side with the movable claws (springs).
* Not removable without sliding the end plate.

Installing the end plate

As illustrated in the diagram, hook the claws onto both sides and temporarily fasten the screws. (Fully tighten the screws after installation of the sub-blocks)

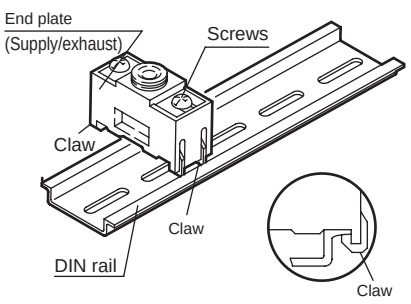

Mounting the solenoid valve

Together with the specially designed gasket, tighten with the screws.

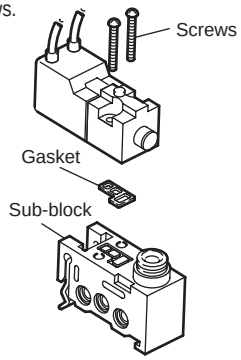

Tubes to use with piping

As the push-in fitting used for the block manifold will retain the O.D. of the tube for piping, use a CKD soft nylon tube, urethane tube, new urethane tube, flame-resistant tube, or a tube having the same O.D. dimensions and thickness with tubing material of hardness 93° or above. If a tube that does not satisfy the above specifications is used, the tube may dislocate or may be difficult to insert.

C-/D-connector wiring method

Wire with steps ❶ to ❻.

* For the details of crimp terminals and crimping tools, contact CKD.

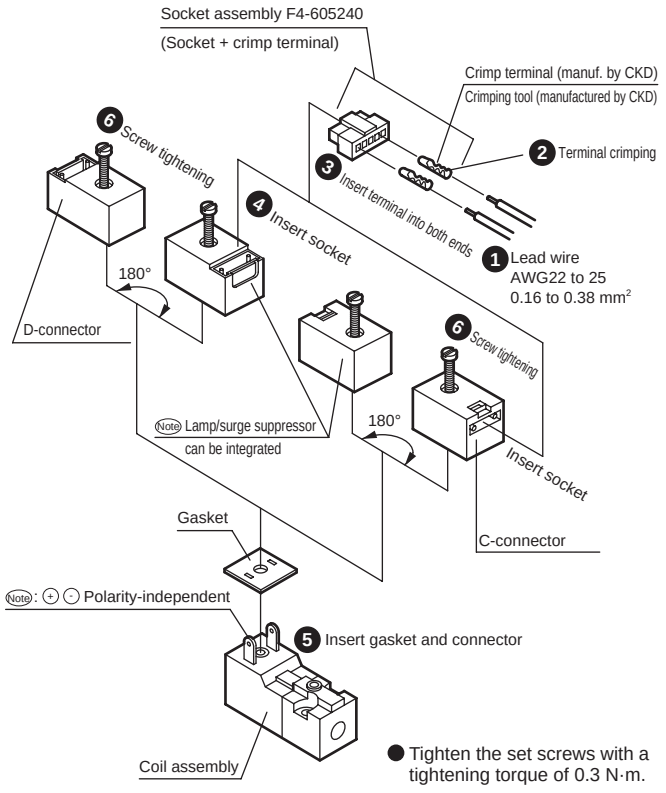

● Tighten the set screws with a tightening torque of 0.3 N·m.

Compact terminal box with lamp wiring method

Wire with steps ❶ to ❺.

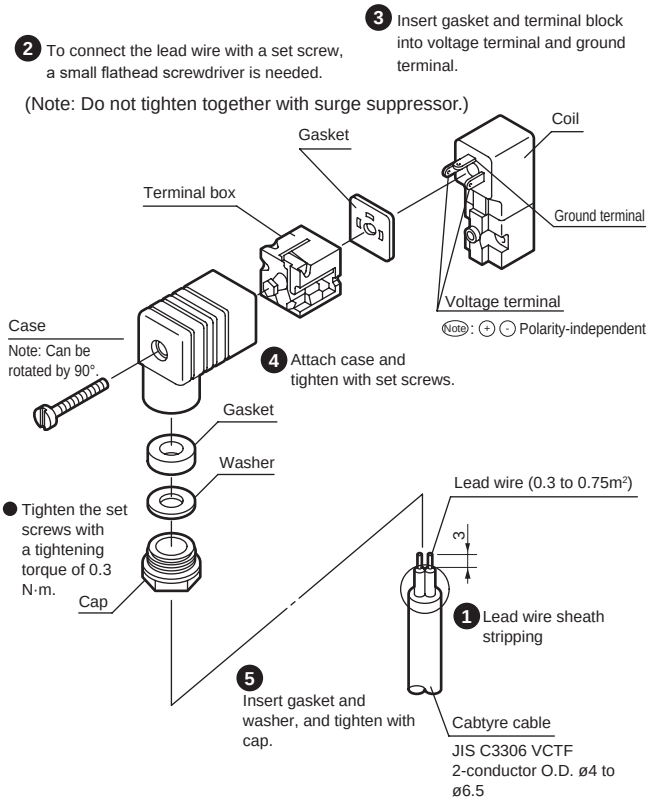

Compact terminal box (B) wiring method

Wire the compact terminal box (B) by following the steps of ❶ to ❻ with reference to the figure below.

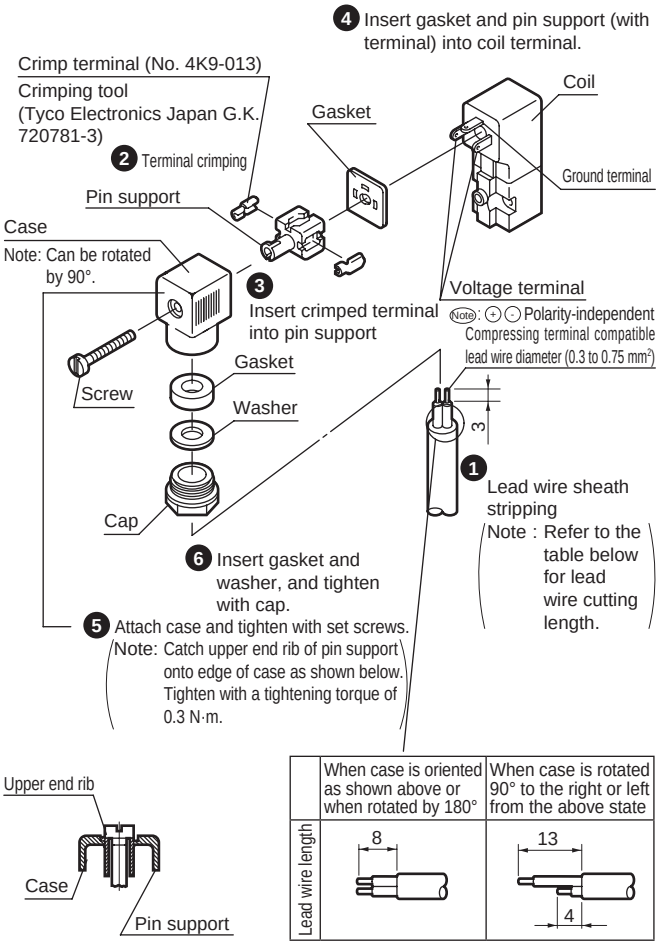

	When case is oriented as shown above or when rotated by 180°	When case is rotated 90° to the right or left from the above state
Lead wire length	8	13 (4)

Miniature pneumatic valve Block manifold specifications sheet

Issued / /

Company

Contact

Order No.

● Contact ● Quantity Set ● Delivery date /

Slip No.	Order No.

● Manifold model No.

N □ P51 □ □ - □ □ □ □ - □ - □

B Solenoid valve station No. | C Solenoid valve | D Orifice | E Manual override | F Electrical connections | G Pressure classification | H Coil direction | I Other options | J Voltage

B Solenoid valve station No.		C Solenoid valve		D Orifice	
2	2 stations	**2**	2-port valve	**2**	ø1.2
3	3 stations	**3**	3-port valve	**6**	ø1.6
to	to	**4**	5-port valve	**8**	Mix
25	25 stations *	**8**	Mix		

* The max. station No. is 25.

*1: Use orifice 2 when only using 5-port valves. Use the orifice selected with the 3-port valve when using a mixture of 2 and 3-port valves.

*2: Orifice mixtures of 3-port valves are available as a custom order product.

E Manual override	
M6	Upward non-locking (standard)
N	No manual override (option)
M0	Lateral non-locking (standard)
M1	Lateral direction lock (option)
M4	Dust cover equipped non-locking

M0 and M1 are not available with 5-port valves for low vacuum (V).

F Electrical connections		Lead wire length	
E	Grommet lead wire	300 mm	Standard
B	Compact terminal box	None	
C	C-connector	300 mm	Option
C00		500 mm	
C01		1000 mm	
C02		2000 mm	
C03		3000 mm	
C1		None	
C2	C-connector (with surge suppressor and indicator lamp)	300 mm	
C20		500 mm	
C21		1000 mm	
C22		2000 mm	
C23		3000 mm	
C3		None	
D	D-connector	300 mm	
D00		500 mm	
D01		1000 mm	
D02		2000 mm	
D03		3000 mm	
D1		None	
D2	D-connector (with surge suppressor and indicator lamp)	300 mm	
D20		500 mm	
D21		1000 mm	
D22		2000 mm	
D23		3000 mm	
D3		None	
L	Compact terminal box (with lamp)	None	
LS	Compact terminal box (with surge suppressor/lamp)	None	
P	Compact terminal box (with surge suppressor)	None	
Q	Grommet lead wire (with surge suppressor)	300 mm	

G Pressure classification		H Coil direction	
Blank	Standard or mixed	**Blank**	Std direction
V	For low press/vacuum	**R**	180° rotation

V is only applicable to 2, 3-port valves for low pressure (0 to 0.29 MPa) / low vacuum (3.3 to 101.0 kPa (abs) {25 to 760 Torr}). Draw in the vacuum from port P (S). Models for low pressure/low vacuum are not available with only 5-port valves.

R is available as standard only with electrical connections: E (grommet lead wire). Consult with CKD for other electrical connections.

I Other options	
Blank	None
S	Surge suppressor attached

The grommet lead wire for 24 VDC or less is the suppression.

X	Continuous energization (custom order product 5-port valve only)

J Voltage	K Piping	
100 VAC	UH4	Upward piping push-in fitting ø4
200 VAC	SH4	Side piping push-in fitting ø4
12 VDC	(Fill in with field C in the table below.)	
24 VDC		
110 VAC		
220 VAC		

* The continuous energization of the 5-port valve is available as a custom order (code "X"). Contact CKD for details about the specifications.

● The diagram below illustrates side piping.

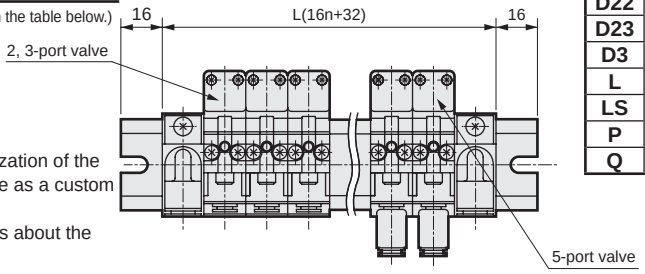

Installation position No. 1 2 3 n-1 n

When filling in this field, select the model No. from "Block configurations" (pages 1666 and 1667). * n indicates the number of blocks.

	Part name	Model No.	Installation position No. (up to a max. of 25 stations) 1 2 3 4 5 6 7 8 9 10 11 12 13 14 15 16 17 18 19 20 21 22 23 24 25 26 27 28 29 30	Quantity
A	End plate for left side air supply	**PL □ H6**		
	End plate for left side exhaust	**RL □ H6**		
B	End plate for right side air supply	**PR □ H6**		
	End plate for right side exhaust	**RR □ H6**		
C	Sub-block with solenoid valve	**N51 C D - K**		
		N51 □□ - □		
		N51 □□ - □		
E	Intermediate air supply plate	**PM □ H6**		
	Intermediate exhaust plate	**RM □ H6**		
F	Silencer (for ø6 push-in)	**SLW-H6**	List the number of units to be used in the field for the number of units to be used.	
	Plug (for ø4 push-in)	**GWP4-B**		
	Mounting rail length	**LB= □□**	□ When instructions are not provided within, units will be shipped with the standard dimensions ("L" on pages 1664 and 1665).	

Mark instructions inside □. Specify the installation position numbers with a circle within □ in the order of 1... n from the left side when viewing the diagram on the top right.

Safety Precautions

Be sure to read this section before use.
Refer to Intro Page 59 for general precautions for using valves.

Product-specific cautions: Pilot operated 2, 3, 5-port valve miniature pneumatic valve P/M/B Series

Design/selection

⚠CAUTION

■ The continuous energization of the 5-port valve P5142 is available as a custom order product (code "X").
Contact CKD for details about the specifications.

Use/maintenance

⚠CAUTION

■ Continuous energizing for long periods may accelerate degradation of the solenoid valve. Furthermore, use caution under the following working conditions, as with continuous energization:
· When energized time exceeds non-energized time in intermittent energizing
· When one energizing session exceeds 30 minutes in intermittent energizing
Consider heat dissipation when installing the product.
Contact CKD when energizing this device continuously.

NP/NAP/NVP

Large flow rate 3-port valve

Pilot operated solenoid valve/external pilot operated air drive poppet valve

Overview

Large flow rate 3-way valve with sealing strength enabled by its poppet structure. NP Series, internal pilot suitable for cylinder driving up to ø400. NAP/NVP Series, external pilot compatible with both positive pressure and negative pressure (vacuum). Two types are available to suit the application.

Features

Two types available

- Internal pilot NP Series
  - NC (open when energized)
  - NO (closed when energized)
- External pilot NAP, NVP Series
  - Universal

Large flow rate with compact and lightweight body (Effective cross-sectional area: to 630 mm^2)

Able to operate with no lubrication

Unrestricted mounting orientation

External pilot is compatible with both positive and negative pressures

Poppet structure



CONTENTS

Series variation	1674
Electrical connections list (wire connections/circuit)	1675
Large flow rate 3-port valve	
● Internal pilot 3-port solenoid valve NC/NO (NP13/14)	1676
● External pilot 3-port air operated valve UNI (NAP11)	1682
● External pilot 3-port solenoid valve UNI (NVP11)	1686
Technical data	
(1) How to connect terminal box	1691
(2) Solenoid actuator assembling procedure	1693
⚠ Safety precautions	1694

Series external appearance		Model No.		JIS symbol	Flow characteristics			Voltage (V)	
					C [dm^3/(s·bar)] *1	b	S (mm^2)		
(NC/NO) Internal pilot with solenoid valve	NP13/NP14 	3-port	NP13	NC 	P→A 10A to 20A 15 to 35	10A to 20A 0.27 to 0.31	25A to 50A 200 to 660	100 AC 200 AC 24 DC Custom order 110 AC 220 AC	
			NP14	NO 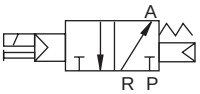	R→A 10A to 20A 15 to 41	10A to 20A 0.21 to 0.31	25A to 50A 210 to 630		
(Universal) Air operated	NAP11 		NAP11	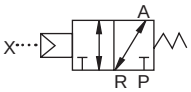	P→A 10A to 20A 15 to 35	10A to 20A 0.27 to 0.31	25A to 50A 200 to 660		
(Universal) Pneumatic, solenoid valve	NVP11 		NVP11	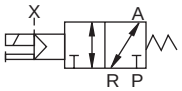	P→A 10A to 20A 15 to 35	10A to 20A 0.27 to 0.31	25A to 50A 200 to 660	100 AC 200 AC 24 DC Custom order 110 AC 220 AC	

*1: Effective cross-sectional area S and sonic conductance C are converted as S ≈ 5.0 × C.

	Port size of port A/P							Coil housing					Page
	Female thread												
	Rc3/8	Rc1/2	Rc3/4	Rc1	Rc1 1/4	Rc1 1/2	Rc2	Grommet coil	With DIN terminal box (Pg thread)	DIN terminal box with lamp (Pg thread)	With T type terminal box(G1/2)	T type terminal box with lamp(G1/2)	
	●	●	●	●	●	●	●	●	●	●	●	●	1676
	●	●	●	●	●	●	●	●	●	●	●	●	
	●	●	●	●	●	●	●						1682
	●	●	●	●	●	●	●	●	●	●	●	●	1686

Electrical connection circuit diagram

Option	Wiring circuit		Coil housing
	AC	DC	
-			Grommet coil (2C) DIN terminal box(2G) T type terminal box (3T)
With indicator lamp	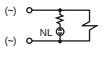	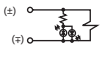	DIN terminal box (2H) T type terminal box (3R)
With surge suppressor	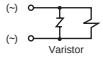	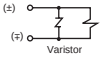	Grommet coil (2CS, Rc1) 1/4 to Rc2) DIN terminal box (2GS) T type terminal box (3TS)
with surge suppressor and indicator lamp	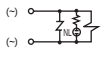	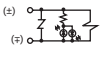	DIN terminal box (2HS) T type terminal box (3RS)
Surge suppressor included	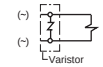	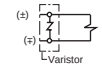	Grommet coil (2CS, Rc3/8 toRc1)



Internal pilot 3-port solenoid valve

NP13/NP14 Series

- NC, NO
- Port size: Rc3/8 to Rc2

CE Refer to the Ending for details.

RoHS CAD

JIS symbol

● NC)Model

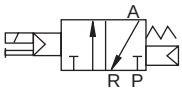

● NO

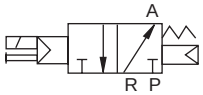

Common specifications

Item	NP13	NP14
Actuation	NC (open when energized)	NO (closed when energized)
Fluid pressure supply port	Port P	Port R
Working fluid	Compressed air	
Proof pressure MPa	1.2	
Working pressure MPa	0.2 to 0.8	
Fluid temperature °C	5 to 60	
Ambient temperature °C	10 A to 25 A: -5 to 60 and 32 A to 50 A: -5 to 40 for both NP13/NP14	
Thermal class	Class 130 (B)	
Lubrication	No lubrication (use turbine oil Class 1 ISO VG32 for lubrication)	
Valve seat leakage cm^3/min	1 or less (at pneumatic pressure 0.2 to 0.8 MPa)	
Valve structure	Internal pilot balance poppet structure	
Mounting orientation	Unrestricted	

Individual specifications

Item / Model No.	Port size: P, A Port	Port size: Port R	Orifice size(mm)	Response time (ms)	Rated voltage	Apparent power (VA): When holding 50Hz	Apparent power (VA): When holding 60Hz	Apparent power (VA): When starting 50Hz	Apparent power (VA): When starting 60Hz	Power consumption (W): AC 50/60Hz	Power consumption (W): DC	Weight (kg)
NC (port P pressurization)												
NP13-10A	Rc3/8	Rc1/2	14.8 or equiv.	30 or less (*1)	100, 200 VAC (50/60 Hz)	3.6	2.8	11	9	1.9/1.5	4	0.7
NP13-15A	Rc1/2											0.7
NP13-20A	Rc3/4	Rc 1	25.4 or equiv.	60 or less (*1)	110, 220 VAC (60Hz)							1.5
NP13-25A	Rc 1											1.5
NP13-32A	Rc1 1/4	Rc 2	41.4 or equiv.	120 or less (*1)	24 VDC	15	11	40	35	7.5/6.0	8	4.5
NP13-40A	Rc1 1/2											4.5
NP13-50A	Rc 2											4.4
NO (port R pressurization)												
NP14-10A	Rc3/8	Rc1/2	14.8 or equiv.	30 or less (*1)	100, 200 VAC (50/60 Hz)	3.6	2.8	11	9	1.9/1.5	4	0.7
NP14-15A	Rc1/2											0.7
NP14-20A	Rc3/4	Rc 1	25.4 or equiv.	60 or less (*1)	110, 220 VAC (60Hz)							1.5
NP14-25A	Rc 1											1.5
NP14-32A	Rc1 1/4	Rc 2	41.4 or equiv.	120 or less (Note1)	24 VDC	15	11	40	35	7.5/6.0	8	4.5
NP14-40A	Rc1 1/2											4.5
NP14-50A	Rc 2											4.4

*1: The response times are values with supply pressure of 0.5MPa, without lubrication, and with the power ON. They depend on the pressure and the lubricant quality.

*2: Use the product within ±10% of the rated voltage.

Flow characteristics

Model No.	P→A				A→R			
	C[dm³/(s·bar)]	b	Cv	S(mm²)	C[dm³/(s·bar)]	b	Cv	S(mm²)
NC (P port pressurization)								
NP13-10A	15	0.31	3.4	-	16	0.28	3.4	-
NP13-15A	18	0.29	3.6	-	17	0.26	3.6	-
NP13-20A	35	0.27	8.4	-	41	0.21	8.6	-
NP13-25A	-	-	8.6	200	-	-	9.0	210
NP13-32A	-	-	25.8	600	-	-	26.2	610
NP13-40A	-	-	27.0	630	-	-	26.6	620
NP13-50A	-	-	28.2	660	-	-	27.0	630
Model No.	**R→A**				**A→P**			
	C[dm³/(s·bar)]	b	Cv	S(mm²)	C[dm³/(s·bar)]	b	Cv	S(mm²)
NO (R port pressurization)								
NP14-10A	15	0.31	3.4	-	15	0.33	3.4	-
NP14-15A	17	0.30	3.6	-	18	0.31	3.6	-
NP14-20A	41	0.21	8.6	-	35	0.27	8.4	-
NP14-25A	-	-	9.0	210	-	-	8.6	200
NP14-32A	-	-	26.2	610	-	-	25.8	600
NP14-40A	-	-	26.6	620	-	-	27.0	630
NP14-50A	-	-	27.0	630	-	-	28.2	660

*1 : Effective cross-sectional area S and sonic conductance C are converted as S ≈ 5.0 x C.

How to order

NP1 3 - 15A - 1 2G S - 1

Model No.

Ⓐ Actuation

Ⓑ Port size

Ⓒ Body/sealant combination

Ⓓ Coil housing *1

Ⓔ Other Option *2

Ⓕ Rated voltage

Code	Description
Ⓐ Actuation	
3	NC (open when energized)
4	NO (closed when energized)
Ⓑ Port size	
10 A	Rc 3/8
15 A	Rc 1/2
20A	Rc 3/4
25 A	Rc 1
32 A	Rc 1 1/4
40 A	Rc 1 1/2
50 A	Rc 2

Ⓒ Body/sealant combination		
	Body	Seal
1	Aluminum	Nitrile rubber

Ⓓ Coil housing		
2C	Standard	Grommet coil
2G	Option	DIN terminal box (Pg thread)
2H	Option	DIN terminal box with lamp (Pg thread)
3T	Option	With T type terminal box (G1/2)
3R	Option	T type terminal box with lamp (G1/2)

Ⓔ Other options	
Blank	No option
S	With surge suppressor

Ⓕ Rated voltage		
1	Standard	100 VAC(50/60Hz),110 VAC(60Hz)
2	Standard	200 VAC(50/60Hz),220 VAC(60Hz)
3	Standard	24 VDC
AC110V	Custom	110 VAC(50/60Hz)
AC220V	Custom	220 VAC(50/60Hz)

⚠ Precautions for model No. selection

*1: Pg thread of the DIN terminal box is Pg9 for port size 10A to 25A, and Pg11 for 32A to 50A.
*2: When selecting the grommet coil, the optional surge suppressor is attached with a port size of 10A to 25A. When selecting the coil with a terminal box, the optional surge suppressor is attached in the terminal box of 32A to 50A.
*3: Manual override (non-locking) is provided as standard.

[Model No. example]

NP13-15A-12GS-1

Model:NP

Ⓐ Actuation :NC (open when energized)
Ⓑ Port size :Rc 1/2
Ⓒ Body/sealant combination
: Body/aluminum, sealant/nitrile rubber
Ⓓ Coil housing :With DIN terminal box
Ⓔ Other options :With surge suppressor
Ⓕ Voltage :100 VAC (50/60 Hz), 110 VAC (60 Hz)

Internal structure and parts list

● **NP$^{13}_{14}$- 10A/15A**

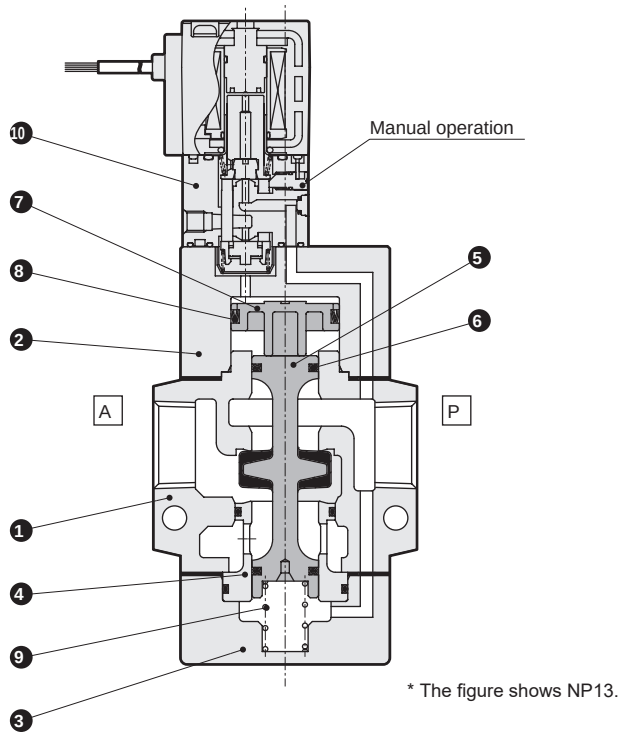

* The figure shows NP13.

● **NP$^{13}_{14}$-20A** to **50A**

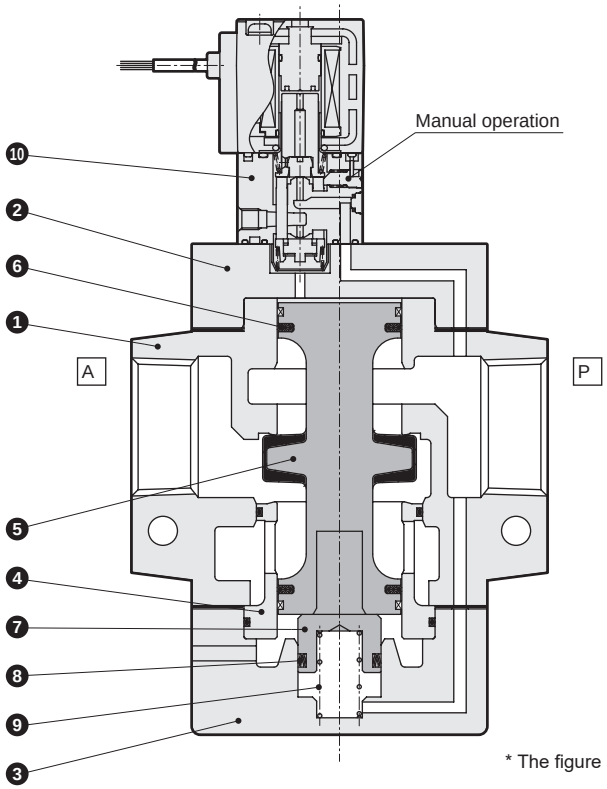

* The figure shows NP13.

Part No.	Part name	Material	
1	Body	AC4C	Aluminum casting
2	Stuffing	AC4C	Aluminum casting
3	Cap	AC4C	Aluminum casting
4	Valve seat	C3604	Copper alloy
5	Valve stem	NBR, A2017	Nitrile rubber,Aluminum

Part No.	Part name	Material	
6	Packing	NBR	Nitrile rubber
7	Piston	POM	Acetal resin
8	MY packing	NBR	Nitrile rubber
9	Spring	SUS304	Stainless steel
10	Pilot solenoid valve	-	-

Dimensions CAD

● Grommet coil

NP$^{13}_{14}$-10A/15A-12C

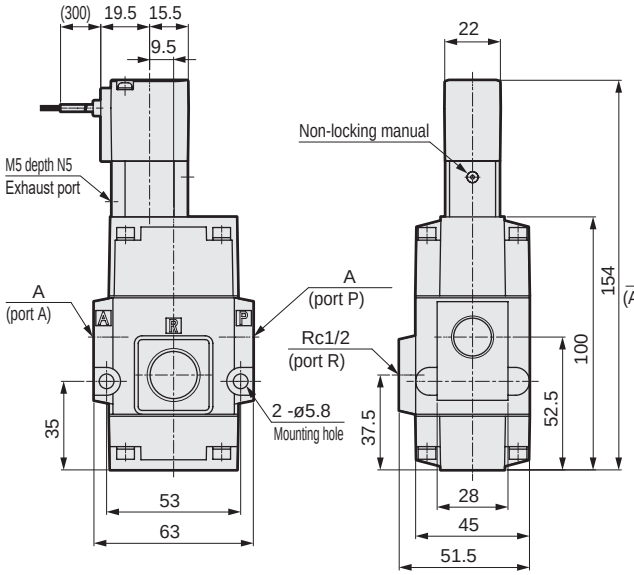

Model No.	A
NP1*-10A-1**	Rc3/8
NP1*-15A-1**	Rc1/2

● Grommet coil

NP$^{13}_{14}$-20A/25A-12C

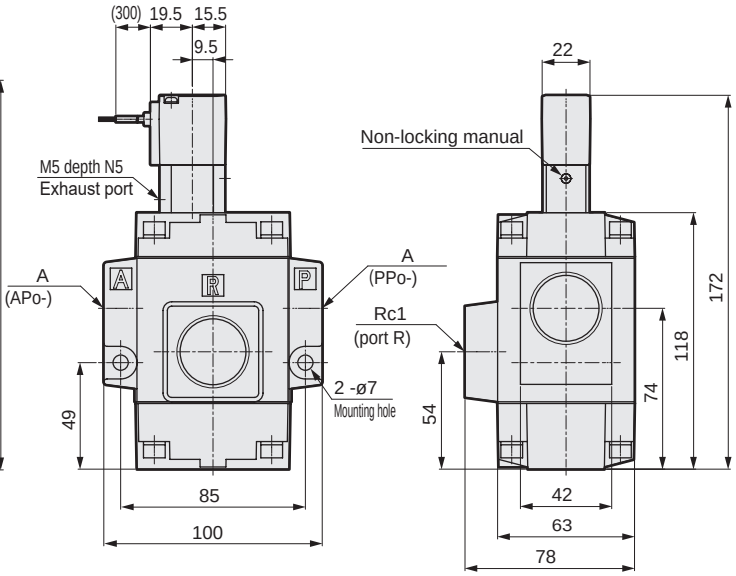

Model No.	A
NP1*-20A-1**	Rc3/4
NP1*-25A-1**	Rc 1

● Grommet coil

NP$^{13}_{14}$-32A/40A/50A-12C

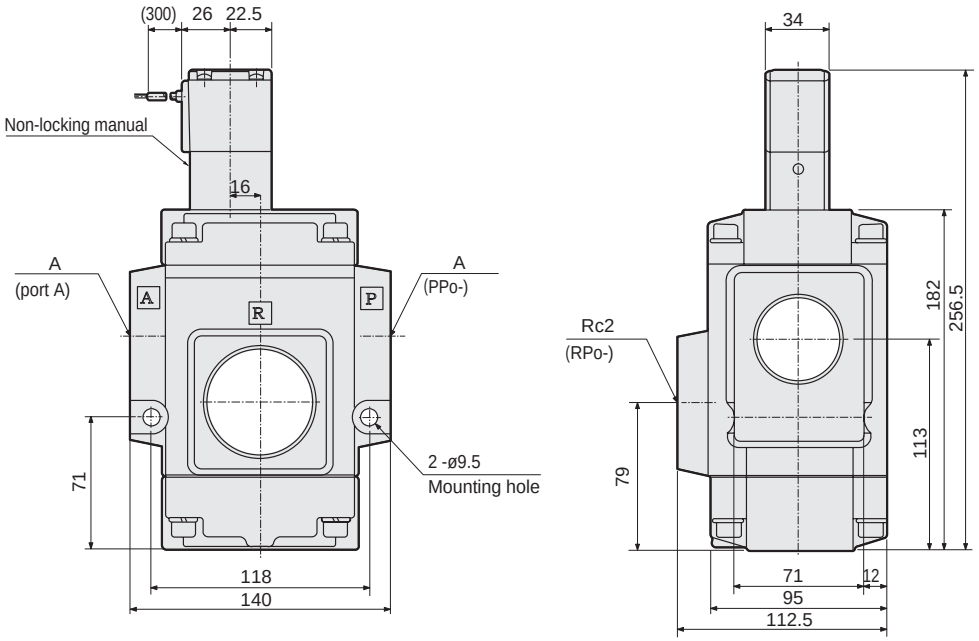

Model No.	A
NP1*-32A-1**	Rc1 1/4
NP1*-40A-1**	Rc1 1/2
NP1*-50A-1**	Rc 2

Optional dimensions

● With DIN terminal box (Pg9)
NP$^{13}_{14}$-10A/15A/20A/25A-1 **2G 2H**

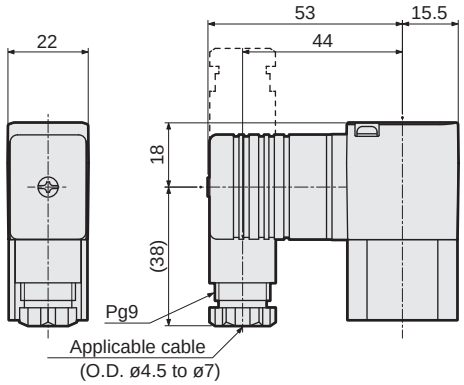

● With DIN terminal box (Pg11)
NP$^{13}_{14}$-32A/40A/50A-1 **2G 2H**

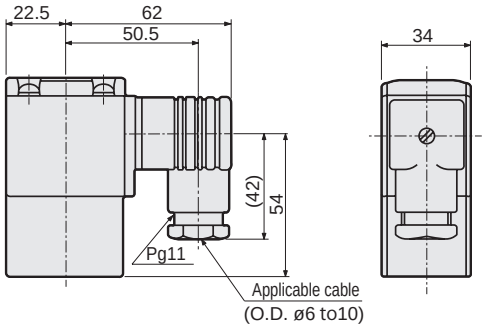

● With T type terminal box (G1/2)
NP$^{13}_{14}$-10A/15A/20A/25A-1 **3T 3R**

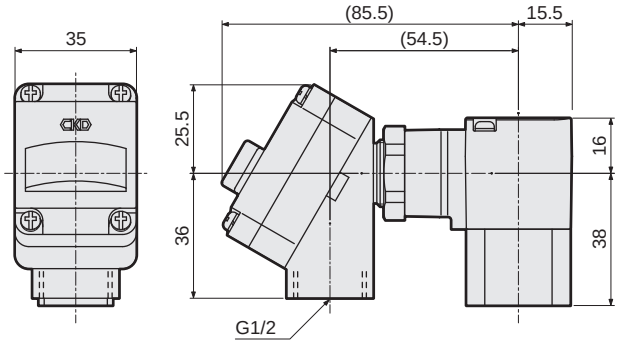

● With T type terminal box (G1/2)
NP$^{13}_{14}$-32A/40A/50A-1 **3T 3R**

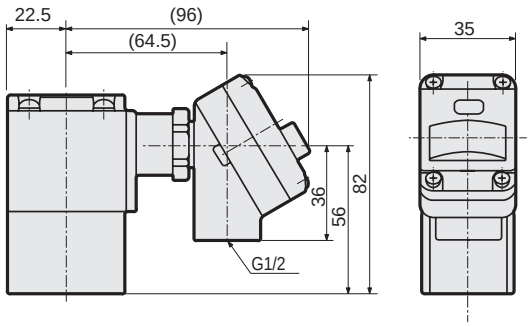

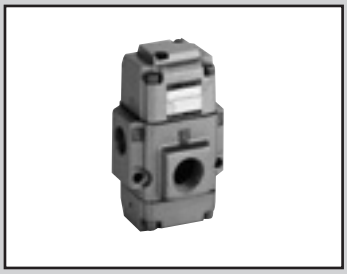

Air operated 3-port valve

NAP11 Series

- Universal
- Port size: Rc3/8 to Rc2

RoHS CAD

JIS symbol

● Universal

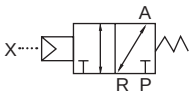

Common specifications

1 MPa = 10 bar

Item	NAP11
Actuation	Universal
Working fluid	Compressed air, low vacuum
Proof pressure MPa	1.2 (≈170 psi, 12 bar)
Working pressure MPa	0 (≈0 psi) to 0.8 (≈120 psi) (1.3×10^2 to 8×10^5 Pa (abs) when used in vacuum)
Fluid temperature °C	5 (41°F) to 60 (140°F)
Ambient temperature °C	-5 (23°F) to 60 (140°F)
Lubrication	No lubrication (use turbine oil Class 1 ISO VG32 for lubrication)
Valve seat leakage cm^3/min	1 or less (at pneumatic pressure 0.02 (≈2.9 psi) to 0.8 MPa (≈120 psi))
Valve structure	External pilot balance poppet structure
Mounting orientation	Unrestricted
Pilot fluid	Air
Pilot pressure MPa	0.35 (≈51 psi, 3.5 bar) to 0.7 (≈100 psi, 7 bar)
Pilot port size (port X)	Rc1/8

Individual specifications

Item / Model No.	Port size: P,A port	Port size: R port	Orifice size (mm)	Response time (ms)	Weight (kg)
NAP11-10A	Rc3/8	Rc1/2	14.8 or equiv.	30 or less (*1)	0.6
NAP11-15A	Rc1/2				0.6
NAP11-20A	Rc3/4	Rc1	25.4 or equiv.	60 or less (*1)	1.4
NAP11-25A	Rc1				1.4
NAP11-32A	Rc1 1/4	Rc2	41.4 or equiv.	120 or less (*1)	4.2
NAP11-40A	Rc1 1/2				4.2
NAP11-50A	Rc2				4.1

*1: The response time is the value at 0.5 MPa supply pressure, with no lubrication, and with the power ON. It depends on the pressure and the lubricant quality.

Flow characteristics

Model No.	P→A				A→R			
	C[$dm^3/(s \cdot bar)$]	b	Cv	S(mm^2)	C[$dm^3/(s \cdot bar)$]	b	Cv	S(mm^2)
NAP11-10A	15	0.31	3.4	-	16	0.28	3.4	-
NAP11-15A	18	0.29	3.6	-	17	0.26	3.6	-
NAP11-20A	35	0.27	8.4	-	41	0.21	8.6	-
NAP11-25A	-	-	8.6	200	-	-	9.0	210
NAP11-32A	-	-	25.8	600	-	-	26.2	610
NAP11-40A	-	-	27.0	630	-	-	26.6	620
NAP11-50A	-	-	28.2	660	-	-	27.0	630

*1: Effective cross-sectional area S and sonic conductance C are converted as S ≈ 5.0 x C.

How to order

NAP1 1 - 15A - 1

Model No.

Ⓐ Actuation

Ⓑ Port size

Ⓒ Body/sealant combination

Code	Description
Ⓐ Actuation	
1	Universal

Ⓑ Port size	
10A	Rc3/8
15A	Rc1/2
20A	Rc3/4
25A	Rc1
32A	Rc1 1/4
40A	Rc1 1/2
50A	Rc2

Ⓒ Body/sealant combination		
	Body	Sealant
1	Aluminum	Nitrile rubber

[Example of model No.]

NAP11-15A-1

Model: NAP

Ⓐ Actuation : Universal
Ⓑ Port size : Rc1/2
Ⓒ Body/sealant combination
: Body/aluminum, sealant/nitrile rubber

Internal structure and parts list

● NAP11-10A/15A

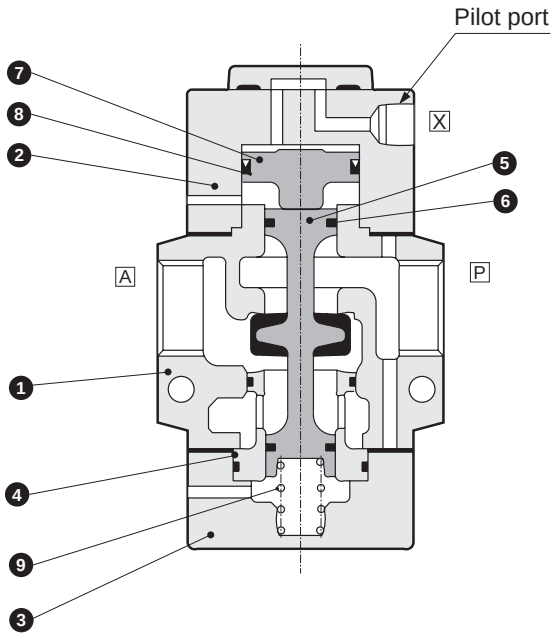

● NAP11-20A/25A/32A/40A/50A

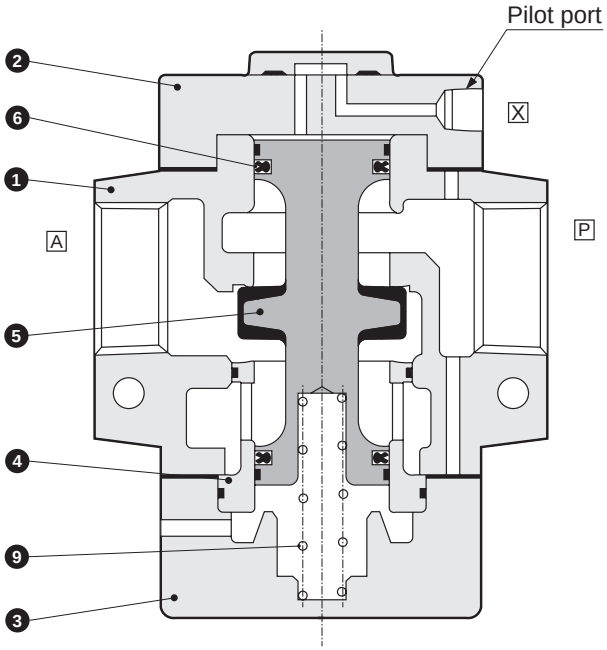

No.	Part name	Material		No.	Part name	Material	
1	Body	AC4C	Aluminum casting	6	Packing	NBR	Nitrile rubber
2	Body	AC4C	Aluminum casting	7	Piston	POM	Acetal resin
3	Cap	AC4C	Aluminum casting	8	MY packing	NBR	Nitrile rubber
4	Valve seat	C3604	Copper alloy	9	Spring	SWP	Piano wire
5	Valve stem	NBR, A2017	Nitrile rubber, aluminum				

Dimensions CAD

● NAP11-10A/15A-1

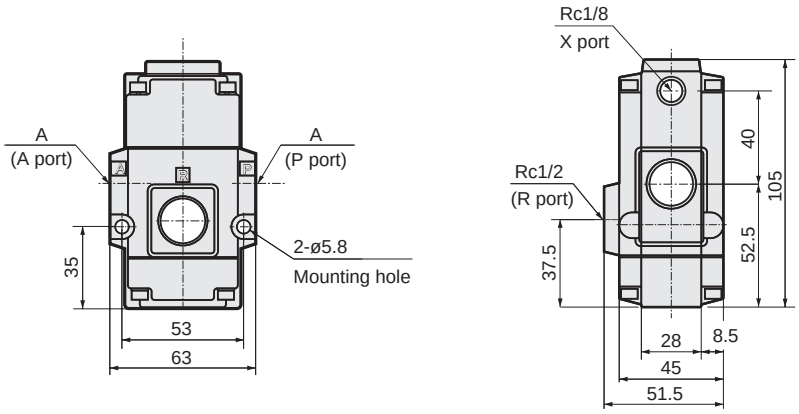

Model No.	A
NAP11-10A-1	Rc3/8
NAP11-15A-1	Rc1/2

● NAP11-20A/25A-1

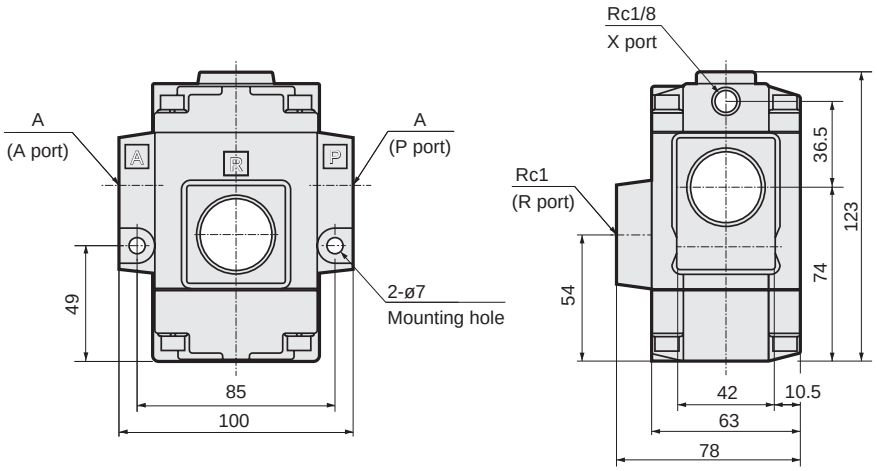

Model No.	A
NAP11-20A-1	Rc3/4
NAP11-25A-1	Rc1

● NAP11-32A/40A/50A-1

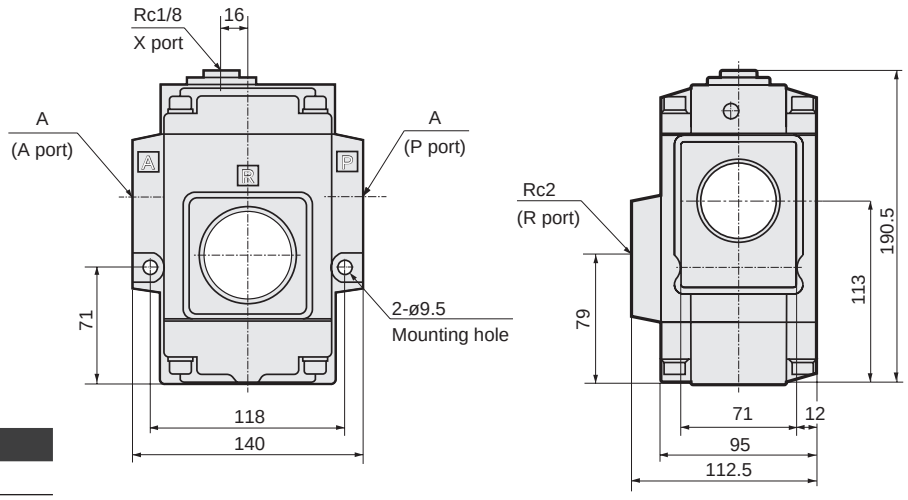

Model No.	A
NAP11-32A-1	Rc1 1/4
NAP11-40A-1	Rc1 1/2
NAP11-50A-1	Rc2



Air operated 3-port solenoid valve

NVP11 Series

- Universal
- Port size: Rc3/8 to Rc2

CE Refer to the Ending for details. RoHS CAD

JIS symbol

● Universal

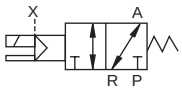

Common specifications

Item	NVP11
Actuation	Universal
Working fluid	Compressed air, low vacuum
Proof pressure MPa	1.2
Working pressure MPa	0 to 0.8 (when using with vacuum, 1.3×10^2~8×10^5Pa(abs))
Fluid temperature °C	5 to 60
Ambient temperature °C	10 A to 25 A: −5 to 60 and 32 A to 50 A: −5 to 40
Thermal class	Class 130(B)
Lubrication	No lubrication (use turbine oil Class 1 ISO VG32 for lubrication))
Valve seat leakage cm^3/min	1 or less (at pneumatic pressure 0.02 to 0.8 MPa)
Valve structure	External pilot balance poppet structure
Mounting orientation	Unrestricted
Pilot fluid	Air
Pilot pressure MPa	0.35 to 0.7
Pilot port size (port X)	Rc1/8

Individual specifications

Item / Model No.	Port size: P, A Port	Port size: Port R	Orifice size(mm)	Response time (ms)	Rated voltage	Apparent power (VA): When holding 50Hz	Apparent power (VA): When holding 60Hz	Apparent power (VA): When starting 50Hz	Apparent power (VA): When starting 60Hz	Power consumption (W): AC 50/60Hz	Power consumption (W): DC	Weight (kg)
NVP11-10A	Rc3/8	Rc1/2	14.8 or equiv.	30 or less (*1)	100, 200 VAC (50/60 Hz)	3.6	2.8	11	9	1.9/1.5	4	0.7
NVP11-15A	Rc1/2											0.7
NVP11-20A	Rc3/4	Rc 1	25.4 or equiv.	60 or less (*1)	110, 220 VAC (60Hz)							1.5
NVP11-25A	Rc 1											1.5
NVP11-32A	Rc1 1/4	Rc 2	41.4 or equiv.	120 or less(*1)	24 VDC	15	11	40	35	7.5/6.0	8	4.5
NVP11-40A	Rc1 1/2											4.5
NVP11-50A	Rc 2											4.4

*1: The response times are values with supply pressure of 0.5 MPa, without lubrication, and with the power ON. They depend on the pressure and the lubricant quality.

*2: Use the product within ±10% of the rated voltage.

Flow characteristics

Model No.	P→A: C[dm^3/(s•bar)]	P→A: b	P→A: Cv	P→A: S(mm^2)	A→R: C[dm^3/(s•bar)]	A→R: b	A→R: Cv	A→R: S(mm^2)
NVP11-10A	15	0.31	3.4	-	16	0.28	3.4	-
NVP11-15A	18	0.29	3.6	-	17	0.26	3.6	-
NVP11-20A	35	0.27	8.4	-	41	0.21	8.6	-
NVP11-25A	-	-	8.6	200	-	-	9.0	210
NVP11-32A	-	-	25.8	600	-	-	26.2	610
NVP11-40A	-	-	27.0	630	-	-	26.6	620
NVP11-50A	-	-	28.2	660	-	-	27.0	630

*1: Effective cross-sectional area S and sonic conductance C are converted as S ≈ 5.0 x C.

How to order

NVP1 1 - 15A - 1 2G S - 1

Model No.

Ⓐ Actuation

Ⓑ Port size

Ⓒ Body/sealant combination

Ⓓ Coil housing *1

Ⓔ Other options *2

Ⓕ Rated voltage

Code		Description
Ⓐ Actuation		
1		Universal
Ⓑ Port size		
10A		Rc 3/8
15A		Rc 1/2
20A		Rc 3/4
25A		Rc 1
32A		Rc 1 1/4
40A		Rc 1 1/2
50A		Rc 2
Ⓒ Body/sealant combination		
	Body	Seal
1	Aluminum	Nitrile rubber
Ⓓ Coil housing		
2C	Standard	Grommet coil
2G	Option	DIN terminal box (Pg thread)
2H	Option	DIN terminal box with lamp (Pg thread)
3T	Option	With T type terminal box (G1/2)
3R	Option	T type terminal box with lamp (G1/2)
Ⓔ Other options		
Blank		No option
S		With surge suppressor
Ⓕ Rated voltage		
1	Standard	100 VAC 50/60 Hz, 110 VAC 60 Hz
2	Standard	200 VAC 50/60 Hz, 220 VAC 60 Hz
3	Standard	24 VDC
AC110V	Custom	110 VAC 50/60Hz
AC220V	Custom	220 VAC 50/60Hz

⚠ Precautions for model No. selection

*1: Pg thread of the DIN terminal box is Pg9 for port size 10 A to 25 A, and Pg11 for 32 A to 50 A.
*2: When selecting the grommet coil, the optional surge suppressor is attached (port size 10 A to 25 A) or incorporated (port size 32 A to 50 A). When selecting the coil with a terminal box, it is mounted in the terminal box.
*3: Manual override (non-locking) is provided as standard.

[Example of model No.]

NVP11-15A-12GS-1

Model: NVP

Ⓐ Actuation : Universal
Ⓑ Port size : Rc1/2
Ⓒ Body/sealant combination
: Body/aluminum, sealant/nitrile rubber
Ⓓ Coil housing : With DIN terminal box
Ⓔ Other options: With surge suppressor
Ⓕ Voltage : 100 VAC 50/60Hz, 110 VAC 60Hz

Internal structure and parts list

● **NVP11-10A/15A**

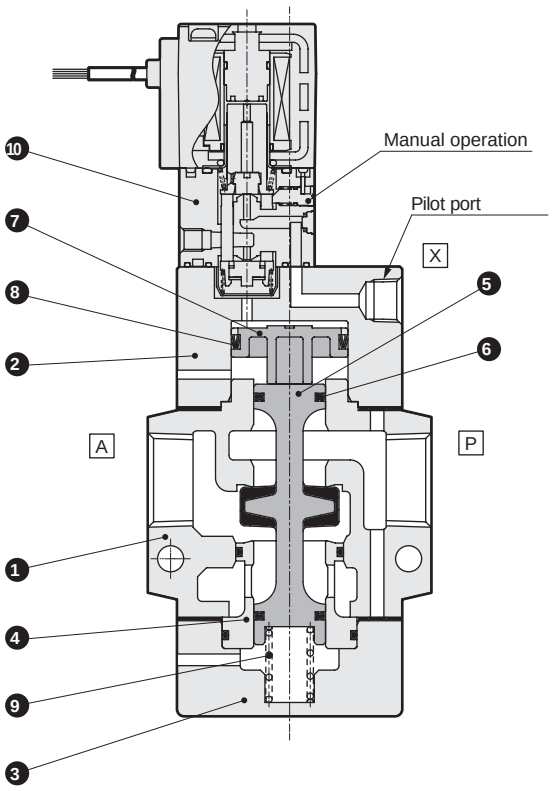

● **NVP11-20A/25A/32A/40A/50A**

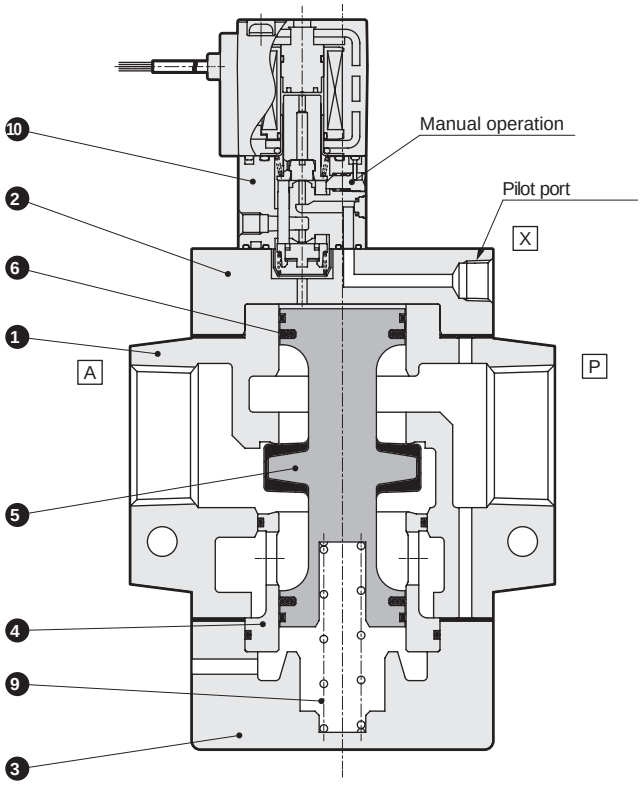

Part No.	Part name	Material		Part No.	Part name	MaterialWeight	
1	Body	AC4C	Aluminum casting	6	Packing	NBR	Nitrile rubber
2	Stuffing	AC4C	Aluminum casting	7	Piston	POM	Acetal resin
3	Cap	AC4C	Aluminum casting	8	MY packing	NBR	Nitrile rubber
4	Valve seat	C3604	Copper alloy	9	Spring	SWP	Piano wire
5	Valve stem	NBR, A2017	Nitrile rubber, ARumi	10	Pilot solenoid valve	-	-

Dimensions

● Grommet coil

NVP11-10A/15A-12C

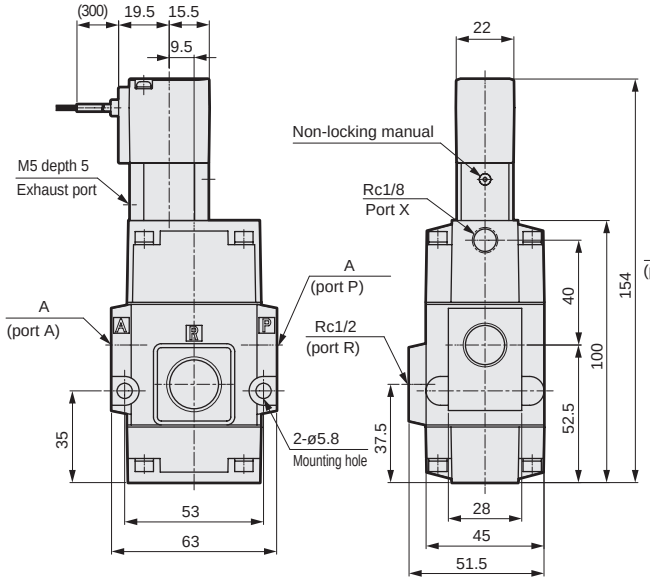

Model No.	A
NVP11-10A-1**	Rc3/8
NVP11-15A-1**	Rc1/2

● Grommet coil

NVP11-20A/25A-12C

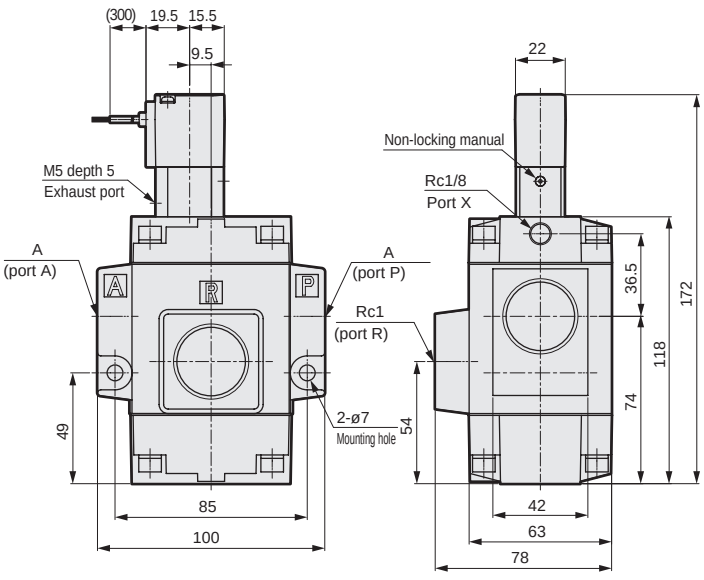

Model No.	A
NVP11-20A-1**	Rc3/4
NVP11-25A-1**	Rc1

● Grommet coil

NVP11-32A/40A/50A

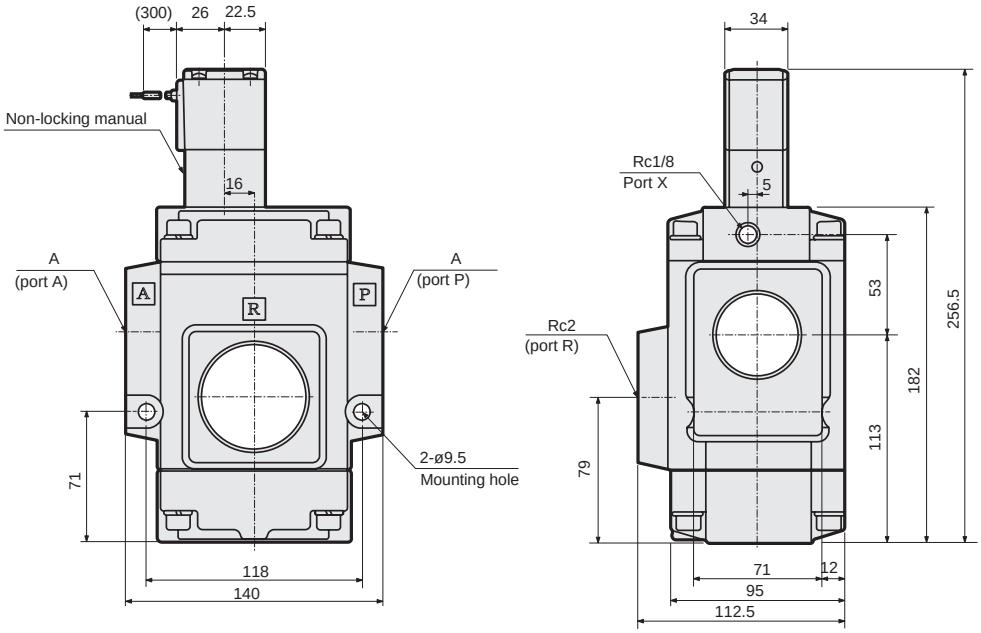

Model No.	A
NVP11-32A-1**	Rc1 1/4
NVP11-40A-1**	Rc1 1/2
NVP11-50A-1**	Rc 2

Optional dimensions

● With DIN terminal box (Pg9)

NVP11-10 A/15 A/20A/25 A-1 **2G** **2H**

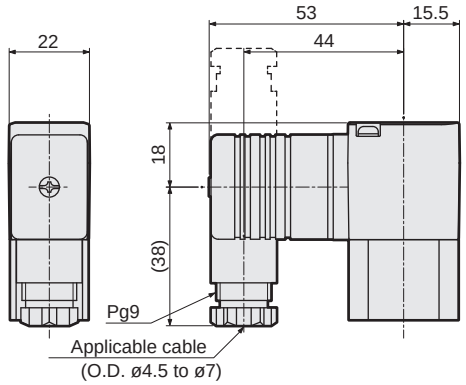

● With DIN terminal box (Pg11)

NVP11-32 A/40 A/50 A-1 **2G** **2H**

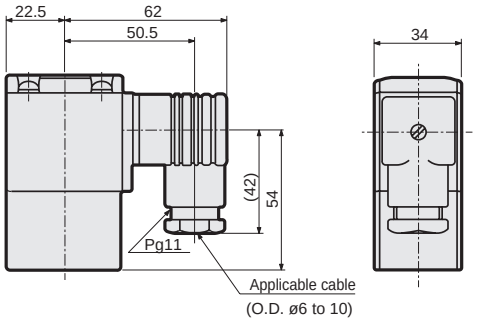

● With T type terminal box (G1/2)

NVP11-10 A/15 A/20A/25 A-1 **3T** **3R**

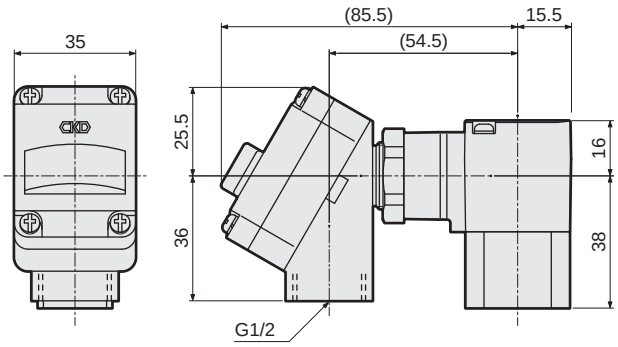

● With T type terminal box (G1/2)

NVP11-32 A/40 A/50 A-1 **3T** **3R**

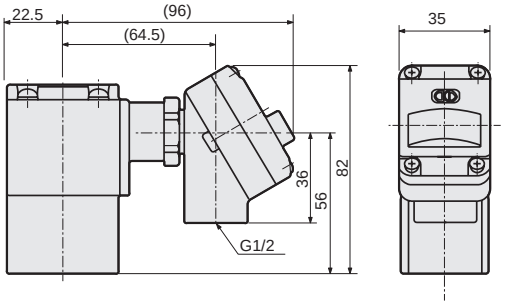

How to connect terminal box

DIN terminal box (Pg9), DIN terminal box with lamp (Pg9)

(1) Use the following cabtyre cable.
· Cable O.D.: ø4.5 to ø7 · Nominal sectional area: 0.75 mm²
(2) Put the crimp terminal for copper wire on the cabtyre cable's lead wire and crimp the terminal. The terminal box thread size is M3.
(3) Tighten the screws with the following tightening torque.
· Set screw tightening torque: 0.5 N·m
· Terminal screw tightening torque: 0.5 N·m

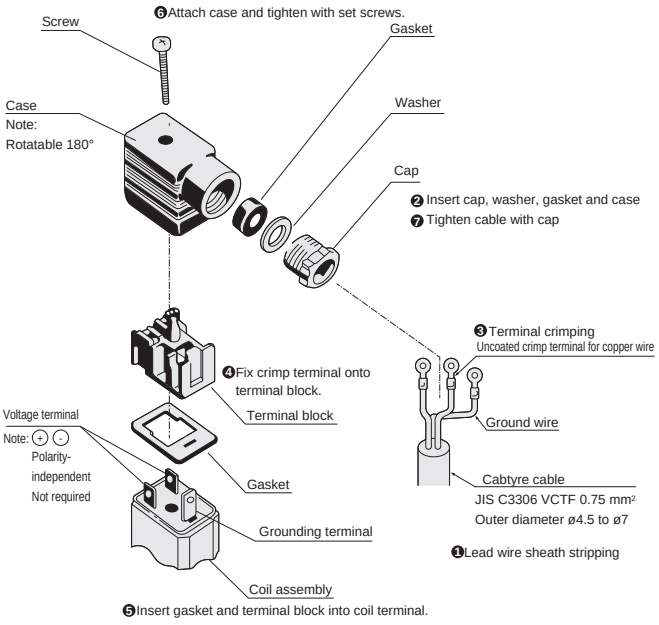

Wire with steps ❶ to ❼.

* The orientation of the cord can be changed by removing the terminal block from the case, rotating it by 180°, and then replacing the block into the case.

DIN terminal box (Pg11), DIN terminal box with lamp (Pg11)

(1) Use the following cabtyre cable.
· Cable O.D.: ø6 to ø10 · Nominal sectional area: 0.5 to 1.5 mm²
(2) Put the crimp terminal for copper wire on the cabtyre cable's lead wire and crimp the terminal. The terminal box thread size is M3.
(3) Tighten the screws with the following tightening torque.
· Set screw tightening torque: 0.5 N·m
· Terminal screw tightening torque: 0.5 N·m

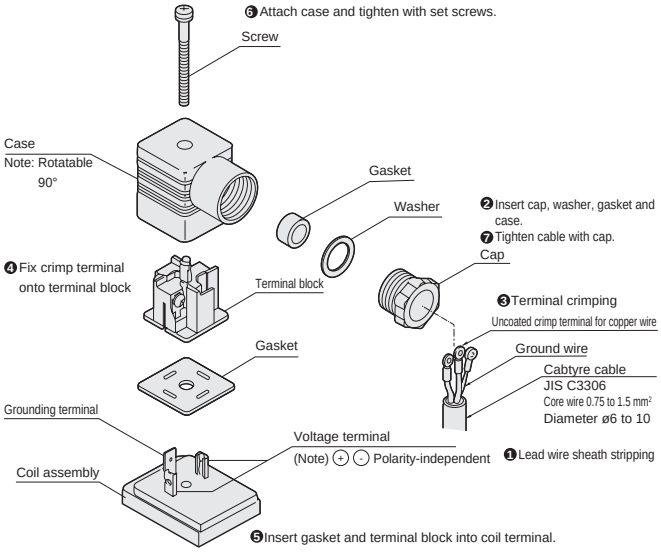

Wire with steps ❶ to ❼.

* The orientation of the cord can be changed by removing the terminal block from the case, rotating it by 90°, and then replacing the block into the case.

How to connect terminal box

T type terminal box (G1/2), T type terminal box with lamp (G1/2)

(1) Use the following cabtyre cable.

·Nominal sectional area: 0.75 mm²

(2) Put the crimp terminal for copper wire on the cabtyre cable's lead wire and crimp the terminal. The terminal box thread size is M3.

(3) Tighten the screws with the following tightening torque.

·Mounting screw tightening torque: 0.5 N·m ·Terminal screw tightening torque: 0.5 N·m

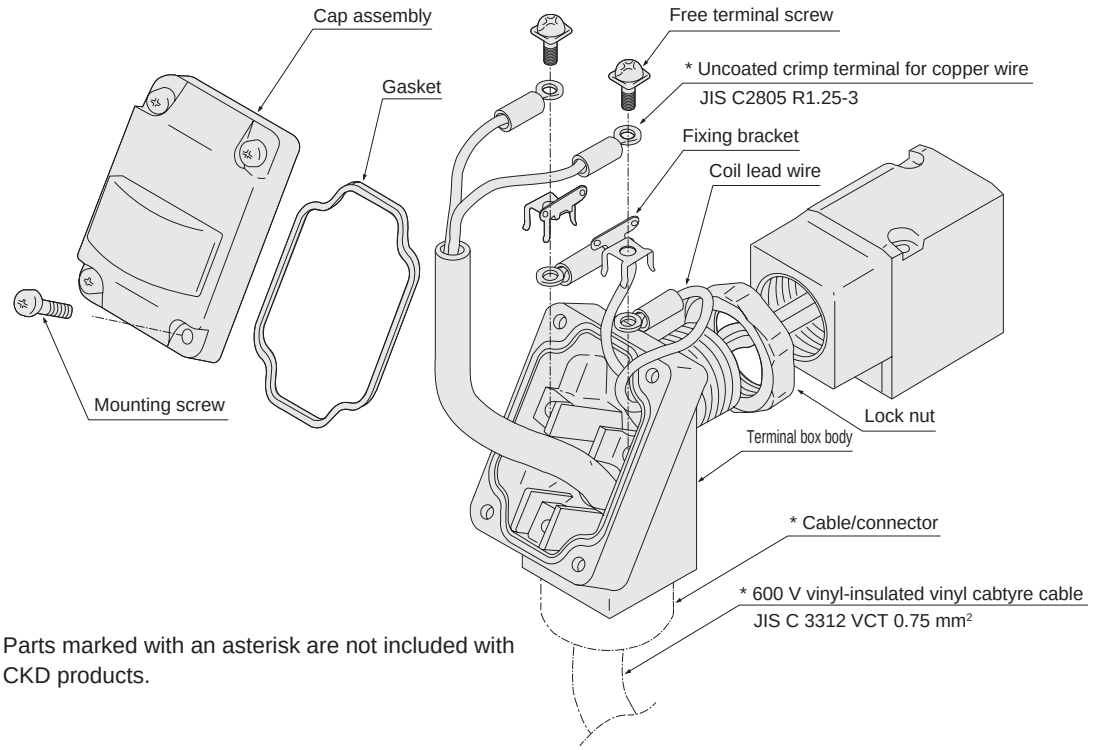

Parts marked with an asterisk are not included with CKD products.

* Changing the orientation of T type terminal box

Use the following steps to change the orientation of the T type terminal box from the default state.

(1) Hold the WAF (25 width) of the T type terminal box with a tool (adjustable wrench, wrench, etc.), and loosen it by turning counterclockwise.

(2) Loosen the lock nut.

(3) Rotate the T type terminal box clockwise to approx. 15° before the required position.

(4) Tighten the lock nut to the coil side by hand until it is lightly tightened.

(5) Hold the WAF of the T type terminal box with a tool, and rotate it (approx. 15°) to tighten it to the required position.

Note : When further tightening the terminal box to change the orientation from the default position, rotate it within 1/2 turn.

NVP11,NP13,NP14-10A to 25A

1 Pilot solenoid valve assembling procedure (for types with solenoid valve)

If the pilot solenoid valve has been disassembled, assemble it as follows.

After disassembly, assemble the manual override section (green) onto the A port side of the body.

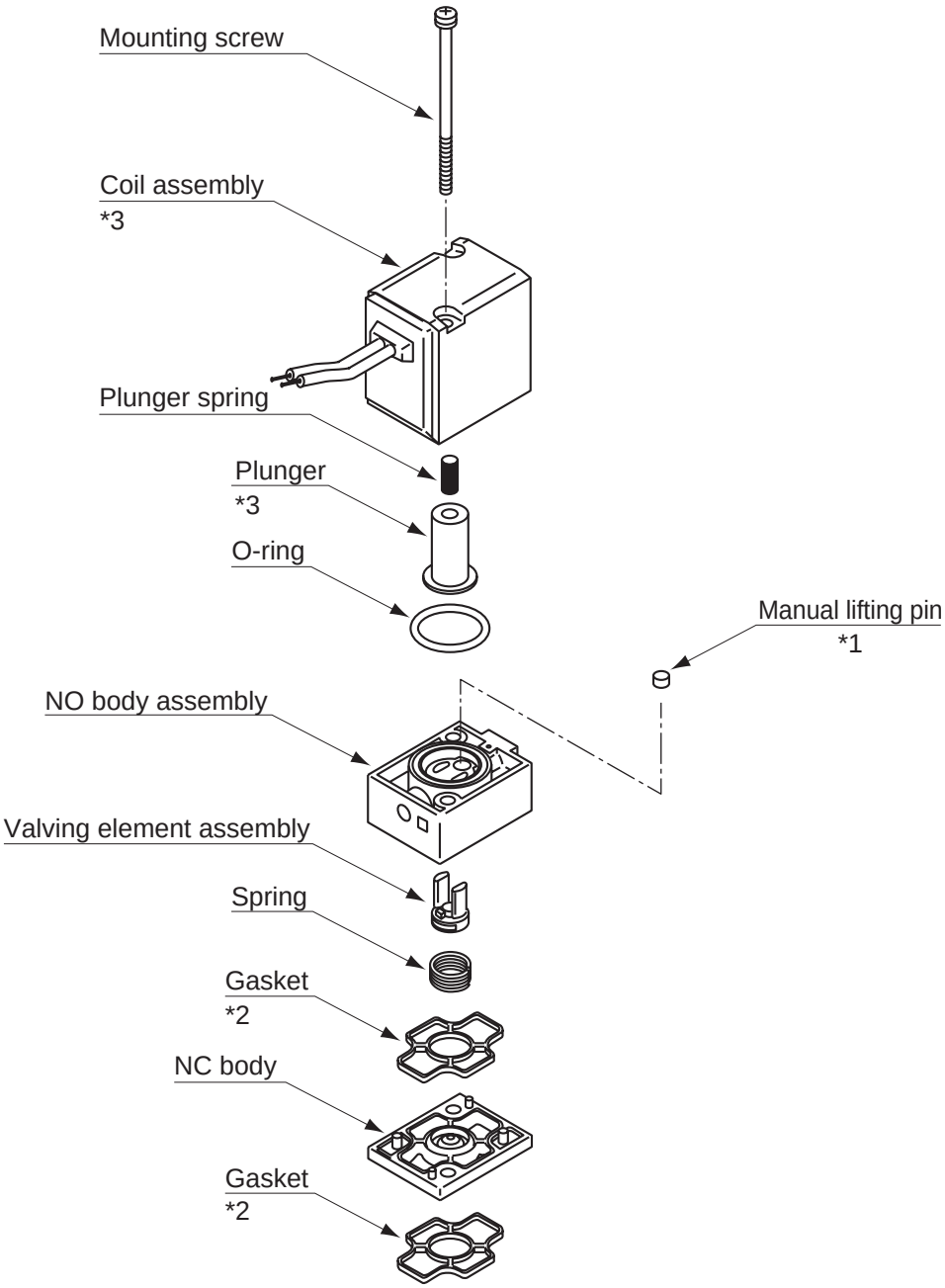

*1 : Do not lose components such as manual lifting pins during disassembly.
*2 : The gasket has an orientation. Be careful when setting in the NC body.
*3 : Coil assembly and plunger are different between AC voltage and DC voltage. Replace them as a set when necessary.
*4 : Plunger is coated with turbine oil for lubrication.

■ Remarks

● Model No. of pilot solenoid valve (actuator assembly kit) for NVP11-10A to 25A, NP $^{13}_{14}$-10A to 25A

CVS2-B-0 □□- (Rated voltage)

↑ Coil option code

Safety Precautions

Be sure to read this section before use.
Refer to Intro Page 59 for general precautions for using valves.

Product-specific cautions: 3-port large flow rate valve NP/NAP/NVP Series

Design/selection

⚠WARNING

■ Ambient environment

(1) NP and NVP Series cannot be used in an explosive gas atmosphere. When using in an explosive gas atmosphere, change to the NAP Series, and provide a separate explosion-proof solenoid valve on the pilot air circuit.
(2) If there are high levels of dust in the area, install a downward-facing silencer or elbow fitting on the exhaust port so that dust does not enter.

■ This product cannot be used as an emergency cutoff valve.

It is not designed to function as a safety valve, such as an emergency shut-off valve. When using in such a system, always take separate measures that will ensure safety.

■ Fluid temperature

Be sure to use the coolant check valve within the specified fluid temperature range.

■ Ambient environment

(1) Do not use this product in a corrosive gas atmosphere or an atmosphere that could affect the component materials.
(2) Do not use this product near a heat generating source or in a location where it may be exposed to radiant heat.
(3) Use this product within the operating ambient temperature.
(4) When using this product in a cold climate, take the necessary measures to prevent freezing.
(5) Take appropriate safeguards according to the degree of protection listed in the catalog specifications. Consult with CKD when using outdoors.
(6) Take appropriate safeguards when using this product in places where oil or welding spatter, etc., could come in contact with it.

⚠CAUTION

■ Ultra dry air

The inside of the valve is pre-lubricated with grease.
This valve may not be appropriate if ultra dry air quality is required at the end of the circuit.

■ Leakage current from other fluid control components

When operating the solenoid valve with a programmable controller, etc., check that the output leakage current from the programmable controller is within the following specifications. Failure to observe this could lead to malfunctions.

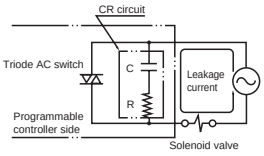

Bore size \ Voltage	100 VAC	200 VAC	24 VDC
10 to 25A	3 (6) mA or less	1.5 (3) mA or less	1.8 (3) mA or less
32 to 50A	6 mA or less	3 mA or less	1 mA or less

The values in ( ) are for models with surge suppressors.

■ Precautions for external pilot air

(1) Draining: Compressed air contains a large amount of drainage (water, oil oxides, tar, foreign matter). This is a factor that significantly reduces the reliability of the pneumatic components. For drainage measures, improve air quality by dehumidifying with an after cooler or dryer, removing foreign matter with a filter, and removing tar with a tar removal filter, etc.
(2) Pre-lubrication - This series is pre-lubricated, so no lubrication is required. However, once lubrication has been started, it must be continued so that the lubricant does not run out. Use turbine oil Class 1 ISO VG32 (#90) or equivalent for lubrication.
(3) Filter: Install a filter with a 5 μm or less filter element.
(4) If pilot air is supplied, the valve may operate even if the pressure is less than the working pressure range.

■ Min. working pressure

The pressure must be 0.2 MPa and over to operate the NP Series. If the piping cross-section area on the fluid inlet is reduced, the operation may become unstable due to a pressure drop during valve operation.

■ Securing maintenance space

Secure sufficient space for maintenance and inspection.

■ Vibration

Install this product in a place not subject to vibration.

Mounting, piping, and wiring

1. Mounting

⚠ CAUTION

■ (1) Be sure to read the instruction manual thoroughly before installing the product.
(2) In the case of models with solenoid valves, do not apply external force to the coil during installation.
(3) After installation, check for leaks from pipes, for proper wire connections and that the product is installed correctly.

2. Piping

⚠ CAUTION

■ Refer to the table below for the piping tightening torque.

Piping nominal diameter	Recommended piping tightening torque (Nm)
Rc1/8	7 to 9
Rc3/8	22 to 24
Rc1/2	28 to 30
Rc3/4	31 to 33
Rc1	36 to 38
Rc1 1/4	40 to 42
Rc1 1/2	48 to 50
Rc2	54 to 56

■ Do not pipe using the solenoid valve section. There is a risk of damage. (NP/NVP only)

■ Observe the effective thread length for the piping threads. Chamfer the end of the thread section by approx. a half-pitch.

■ Before piping, flush the inside of the pipe with 0.3 MPa of air, and remove foreign matter such as dirt, metal chips, rust and sealing tape.

■ If excessive sealant (sealing tape, gel-type sealant) is applied when piping, it could enter the product and cause malfunctions.

■ When applying or wrapping sealant on the piping material, apply or wind it from the pipe end along the thread section, and leave 1.5 to 2 threads uncovered.

■ Dirt or foreign matter in fluid could prevent the product from functioning correctly. Install a 5 μm or finer air filter.

■ Make sure not to use the wrong supply port when connecting the pipes to the product.

■ Install a by-pass circuit and use an elbow union for piping to simplify the maintenance and repair work.

■ When controlling fluid in a tank, pipe at a level slightly above the bottom of the tank.

■ If a manifold is used on the solenoid valve for control, use a solenoid valve with a built-in “exhaust check valve” to avoid malfunctions caused by other exhaust pressures. (NAP only)

3. Wiring (for NP/NVP)

⚠ CAUTION

■ Refer to the technical data on pages 1691 and 1692 for connection methods to a DIN terminal box or T type terminal box.

■ When changing the nominal thread size from Pg9 to G1/2 for the DIN terminal box’s junction box outlets, use the optional connector shown below.

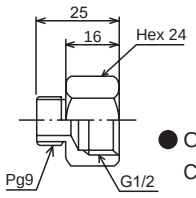

● Order Model No.:
CVS2-CONNECTOR-F4-202936

■ Coil direction can be changed 180°.
To reverse the electrical connection direction, rotate only the coil. The valve will not function if the pilot solenoid valve body is moved.

■ Use with the allowable voltage range. Usage outside the allowable voltage range may lead to malfunction or coil damage.

■ Provide a circuit breaker, such as a fuse, on the control circuit to protect electrical equipment.

■ If the electric circuit system is vulnerable to solenoid surge, use a solenoid with a surge suppressor (optional), or insert a surge absorber, etc., in parallel to the solenoid.

■ As a guide, use a wire with a nominal cross section of 0.5 mm^2 or more. Make sure that excessive force is not applied to the lead wire.

■ Use of a switching circuit which does not generate contact chattering extends the useful life of solenoid valves/motor driven valves.

Use/maintenance

1. Common

⚠WARNING

■ Do not touch coils or actuators with hands or body parts while the power is ON or immediately after it is turned OFF.
The solenoid valve coil and actuator will heat up when energized. Depending on the product, direct contact could cause burns.

■ Do not touch the electrical wiring connections (bare, live parts) with hands or body when they are energized. There is a risk of electric shock.
Touching electrical wiring connections while power is on may lead to electrical shock.

■ Use within the working pressure range.

2. Using the product

⚠CAUTION

■ Using with vacuum
The NVP and NAP Series can be used for both negative pressure (vacuum) and positive pressure. As a balance poppet valve structure is incorporated, a pressurized or vacuum connection can be made from any port.

■ Transfer circuit
When using a vacuum absorbing pad (suction bowl) for the transfer circuit, install a filter between the suction pad and valve so that foreign matter does not enter the valve. Otherwise, leakage may result.

■ Leaving under elevated pressure
If the valve is left under elevated pressure for three days or longer, the starting response could be delayed.

■ Response time
The response times given in the catalog are the times when energized at a pressure of 0.5 MPa and without lubrication.

■ Do not use valves as footing or place any heavy objects on top of the valves.

■ If the product has been out of use for one month or more, perform a test run before starting the actual operation.

3. Maintenance

⚠CAUTION

■ Pilot solenoid valves (NP/NVP)
Port size 10A to 25A
Pilot solenoid valve (actuator assembly kit) for CVS2:
CVS2-B-0 *1 - Rated voltage
is built in. If the pilot solenoid valve has been disassembled, follow the assembly procedure provided on page 1693 of the technical data.
Port size 32A to 50A
Special purpose valve: GFAG41-1-0-1 *1 N - *2
is built in.
The tightening torque for the coil assembly screw is 1.1 to 1.8 N·m when disassembling or assembling.
After disassembly, assemble the manual override section (green) onto the A port side of the body.
Note : *1 is the coil housing code
*2 is the rated voltage code

■ Carefully read the instruction manual before starting maintenance.

■ Always turn the power OFF and release any fluids or pressure before starting maintenance.

■ To ensure optimum use, inspect the product every six months.

■ When cleaning the product, use a low-polluting cleaning agent such as a neutral detergent. (Note that the rubber parts must be replaced. There is a risk of expansion.)

■ Contact CKD with questions about repair parts, etc.

4GD/E EJ

Intrinsically safe explosion-proof pilot operated 3, 5-port valve

Overview

· Intrinsically safe explosion-proof valve with ideal explosion-proof specifications for narrow spaces.

Features

Japan Explosion-Proof Certification compliance
- Certification number
  DEK19.0049
- Explosion-proof performance
  Ex ib IIC T4 Gb

Smallest explosion-proof class

Long service life

Degree of protection IP67 (Waterproof/dust-proof)

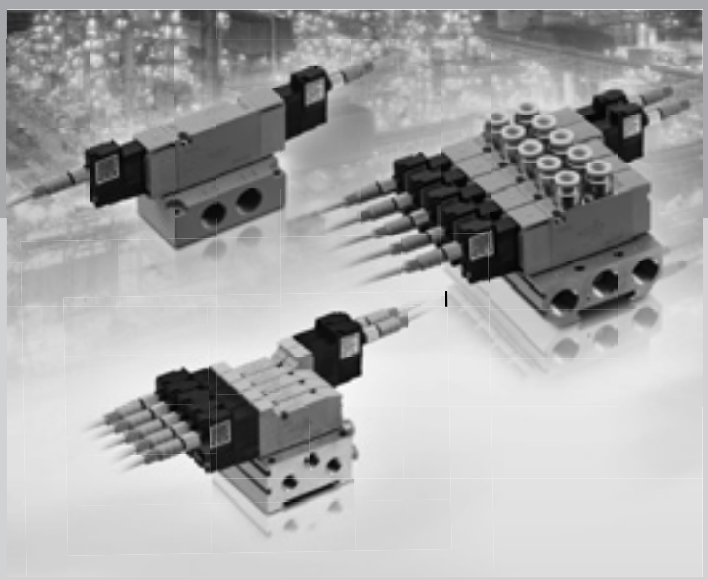

CONTENTS

Product introduction	1698
Discrete valve	
● Body piping (3GD1/2 / 4GD1/2/3/4*0EJ)	1700
● Base piping (3GE1/2 / 4GE1/2/3/4*0EJ)	1720
Individual wiring manifold	
● Body piping (M3GD1/2 / M4GD1/2/3/4*0EJ)	1740
● Base piping (M3GE1/2 / M4GE1/2/3/4*0EJ)	1748
Related components	1758
Manifold specifications sheet	1770
⚠ Safety precautions	1772

Smallest explosion-proof class
Intrinsically safe explosion-proof solenoid valves:
4GD/E1 to 4 Series

Footprint 84% Reduced

Ultra-lightweight 82% Reduced

*Conventional 8-station model comparison

Space saving/lightweight

Ideal for narrow explosion-proof areas.

Two 3-port valves integrated types available

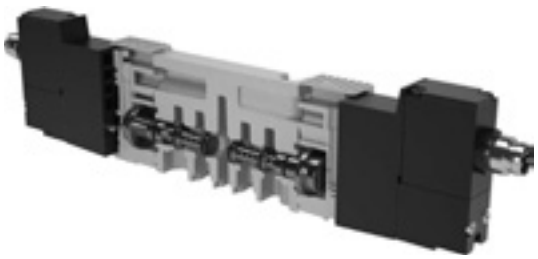

4GE3 and 4F3 footprint and weight comparison

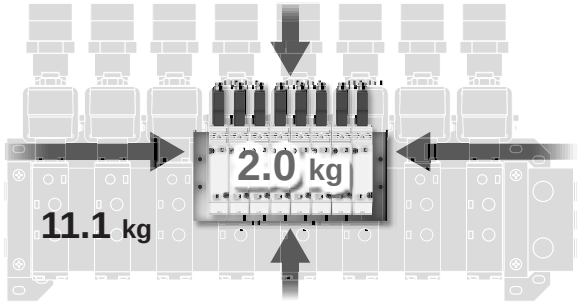

High durability

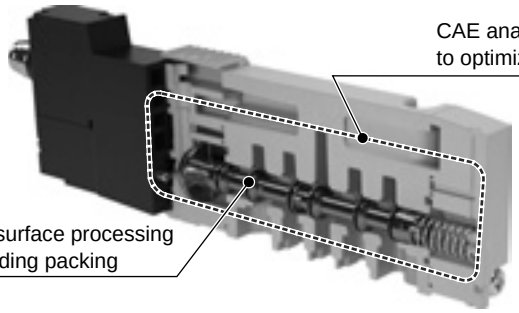

Durability count 50 million cycles or more

Wide-ranging series lineup

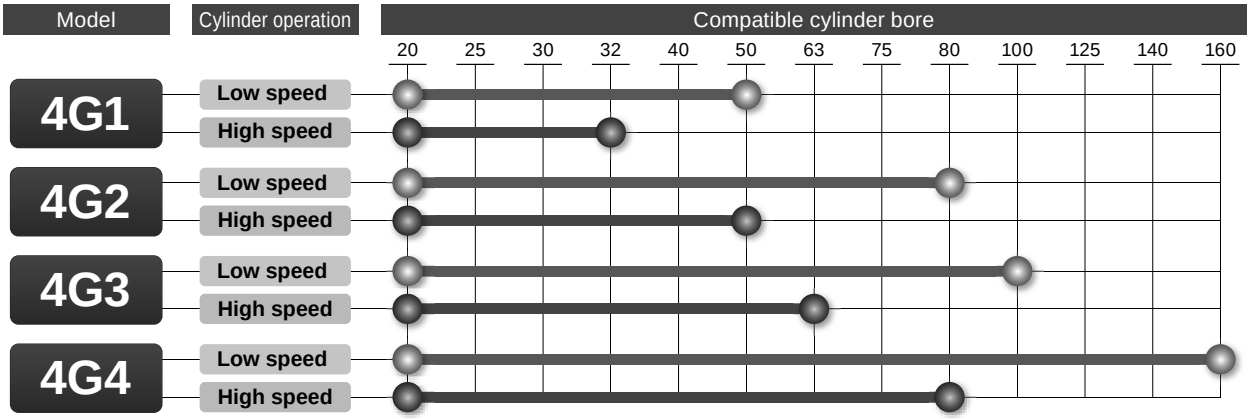

* Table is a guideline only. Varies according to piping conditions, load factor, etc.
Refer to the system selection for details on component selection.



widths from 10 mm

Explosion-proof performance Ex ib IIC T4 Gb

Certification Number DEK19.0049

Degree of protection

IP67

High environmental performance, reliability and ease of use

Manual malfunction prevention

Manual override has a protective cover.



Helps prevent misoperation problems

[Exhaust check valve]

Equipped as standard with both metal base and resin block.

(4G*1 to 4G*3 EJ compatible)

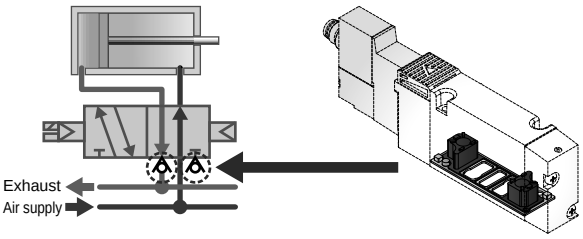

2-direction cable connectors



In-stop valve spacer

Valves can be replaced individually without stopping production line operation.
(4G*1 to 4G*3 EJ compatible)

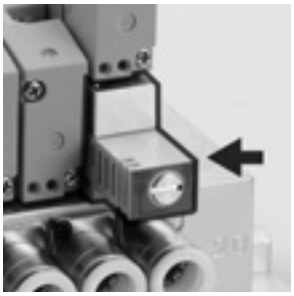

Applications: Ideal explosion-proof specifications for narrow spaces

Coating equipment



Liquid conditioning equipment



Analysis equipment



Solenoid valve space can be sharply reduced when intrinsic safety explosion-proof structures are required.

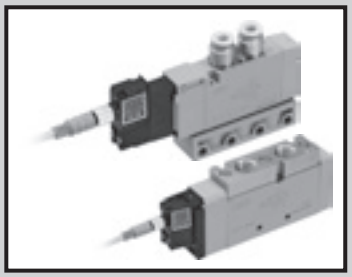

Discrete valve
Body piping

3GD1/2 / 4GD1/2/3/4*0EJ Series

● Applicable cylinder bore size: ø20 to ø140

CE RoHS

JIS symbol

● Two 3-port valves integrated
(A side valve: NC, B side valve: NC)

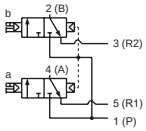

● 5-port valve

2-position single

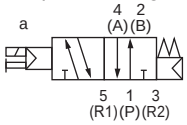

2-position double

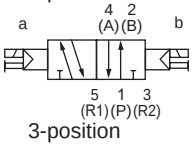

3-position
All ports closed

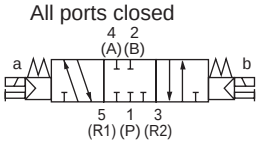

3-position A/B/R connection

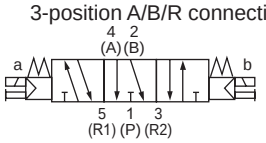

3-position P/A/B connection

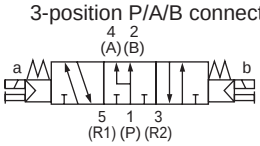

Common specifications

1 MPa ≈ 145.0 psi, 1 MPa = 10 bar

Item	Description
Valve and operation	Pilot operated soft spool valve
Working fluid	Compressed air
Max. working pressure MPa	0.7 (≈101 psi, 7 bar)
Min. working pressure MPa	0.2 (≈29 psi, 2 bar)
Proof pressure MPa	1.05 (≈152 psi, 10 bar)
Ambient temperature °C	-5 (23°F) to 55 (131°F) (no freezing)
Fluid temperature °C	5 (41°F) to 55 (131°F)
Manual override	Non-locking/locking common
Pilot exhaust method	Main valve/pilot valve common exhaust
Lubrication *1	Not required
Degree of protection *2	IP67
Vibration resistance m/s^2	50 or less
Impact resistance m/s^2	300 or less
Atmosphere	Cannot be used in corrosive gas environments

Solenoid specifications

Item	Description
Rated voltage V	12 DC
Voltage fluctuation range	+10% -20%
Rated current A	0.05
Power consumption W	0.6
Thermal class	B

*1: Use turbine oil Class 1 ISO VG32 for lubrication.
Excessive or intermittent lubrication results in unstable operation.

*2: Tested according to the test method for IP67 (IEC60529) standards. Note that while the unit is protected from dust and water, it cannot be used immersed in water. Countermeasures such as covering the unit should also be taken if using in environments where it will be constantly exposed to dust or water.

Intrinsic safety explosion-proof specifications

Item	Description
Types of explosion-proof structures	Intrinsic safety explosion-proof structure (ib)
Target gas or above listed ignitability and flame-proof grade	Ex ib IIC T4 Gb
Barrier input voltage	24 VDC
Intrinsic safety circuit allowable voltage Ui	30 VDC
Intrinsic safety circuit allowable current Ii	200 mA
Intrinsic safety circuit allowable power Pi	0.68 W
Internal inductance Li	Value that can be ignored
Internal capacitance Ci	Value that can be ignored

Individual specifications

Port size	3GD1/4GD1	3GD2/4GD2	4GD3	4GD4
2, 4-port (port A/B)	Push-in fitting ø1.8, ø4, ø6 M5	Push-in fitting ø4, ø6, ø8 Rc1/8	Push-in fitting ø6, ø8, ø10 Rc1/4	Push-in fitting ø8, ø10, ø12 Rc3/8
1, 3, 5-port (port P/R1/R2)	M5	Rc1/8	Rc1/4	Rc1/4

Performance/characteristics by model

Item			3GD1		3GD2		4GD1		4GD2		4GD3		4GD4	
			ON	OFF	ON	OFF	ON	OFF	ON	OFF	ON	OFF	ON	OFF
Response time ms	Two 3-port valves integrated		15	35	20	50	–	–	–	–	–	–	–	–
	2-position	Single	–	–	–	–	15	35	20	40	25	60	100	110
		Double	–	–	–	–	25	25	30	30	35	35	110	110
	3-position	ABR connection	–	–	–	–	20	40	25	45	35	60	100	160

The response times are values under continuous operation at supply pressure of 0.5 MPa, at rated voltage and at 20 °C without lubrication. They depend on the pressure and the lubricant quality.

Weight

Item			4GD1	4GD2	4GD3	4GD4
Weight g	2-position	Single	61(54)	120(90)	155(112)	296(303)
		Double	81(74)	140(110)	176(133)	329(336)
	3-position	ABR connection	84(77)	148(118)	187(143)	361(367)

· Values in ( ) do not include the piping adapter. These values include the M8 connector (straight).
· The weight of the two 3-port valves integrated type is the same as that of the 2-position double.

Flow characteristics

Model No.	Solenoid position		P→A/B		A/B→R1/R2	
			C[dm³/(s·bar)]	b	C[dm³/(s·bar)]	b
3GD1 4GD1	Two 3-port valves integrated		0.98	0.45	0.71	0.34
	2-position		1.2	0.47	0.72	0.37
	3-position	All ports closed	1.1	0.39	0.70	0.34
		ABR connection	1.1	0.33	0.72	0.34
		PAB connection	1.3	0.61	0.72	0.36
3GD2 4GD2	Two 3-port valves integrated		1.8	0.29	2.3	0.32
	2-position		2.4	0.33	2.8	0.30
	3-position	All ports closed	2.2	0.28	2.5	0.28
		ABR connection	2.3	0.26	2.8	0.27
		PAB connection	2.5	0.38	2.4	0.30
4GD3	2-position		3.4	0.29	4.0	0.24
	3-position	All ports closed	3.1	0.27	3.4	0.28
		ABR connection	3.1	0.33	4.1	0.20
		PAB connection	3.5	0.43	3.4	0.32
4GD4	2-position		8.1	0.4	8.0	0.31
	3-position	All ports closed	6.9	0.37	7.5	0.42
		ABR connection	6.9	0.38	8.4	0.34
		PAB connection	8.9	0.37	7.6	0.27

*1: Effective cross-sectional area "S" and sonic conductance "C" are converted as S ≈ 5.0 x C.

3GD1/2 / 4GD1/2/3/4*0EJ Series

Discrete valve; body piping

How to order (solenoid valve single unit)

● Single unit

4GD1 1 0 EJ - M5 - RN ( ) - 4

3GD1 66 0 EJ - C4 - RN ( ) - 4

Ⓐ Model No.
Ⓑ Solenoid position
Ⓒ Explosion-proof Series
Ⓓ Port size
Ⓔ Electrical connections
Ⓕ Option
Ⓖ Voltage

Code	Description		Ⓐ Model No. 3GD1	3GD2	4GD1	4GD2	4GD3	4GD4
Ⓑ Solenoid position								
1	2-position single				●	●	●	●
2	2-position double				●	●	●	●
3	3-position all ports closed				●	●	●	●
4	3-position ABR connection				●	●	●	●
5	3-position PAB connection				●	●	●	●
66	Two 3-port valves integrated *1	A valve side: Normally closed	●	●				
		B valve side: Normally closed						
Ⓒ Explosion-proof Series								
EJ	Japan Explosion-Proof Certified Product		●	●	●	●	●	●
Ⓓ Port size {Ports 4(A), 2(B)}								
Port	Ports 4(A), 2(B)		Port P/R1/R2 (1) = M5, (2) = Rc1/8, (3) = Rc1/4 (4) = Rc3/8 (5) = Rc1/2					
C18	ø1.8 push-in fitting		(1)		(1)			
C4	ø4 push-in fitting		(1)	(2)	(1)	(2)		
C6	ø6 push-in fitting		(1)	(2)	(1)	(2)	(3)	
C8	ø8 push-in fitting			(2)		(2)	(3)	(3)
C10	ø10 push-in fitting						(3)	(3)
C12	ø12 push-in fitting							(3)
M5	M5		(1)		(1)			
06	Rc1/8			(2)		(2)		
08	Rc1/4						(3)	
10	Rc3/8							(3)
Ⓔ Electrical connections								***2**
RN	M8 connector without cable		●	●	●	●	●	●
R1	M8 connector straight cable		●	●	●	●	●	●
R2	M8 connector L-type cable		●	●	●	●	●	●
Ⓕ Option								
Blank	Non-locking/locking common manual override (standard)		●	●	●	●	●	●
H	With exhaust check valve	*3	●	●	●	●	●	
P	Mounting plate included (for 2-position single only)				●	●	●	
A	Ozone/coolant proof		●	●	●	●	●	●
F	A/B port filter	*4	●	●	●	●	●	●
Ⓖ Voltage								
4	12 VDC		●	●	●	●	●	●

⚠Precautions for model No. selection

*1: Dimensions are the same as the respective 2-position double solenoid.
*2: M8 connector length is 300 mm. Select other lengths from page 1764.
*3: 3-position all ports closed and PAB connection are not provided with the exhaust check valve (H).
*4: A filter is built into port P as standard.
*5: Explosion-proof barrier sold separately. Select from page 1768.

Internal structure diagram and parts list

3GD1660EJ

● Two 3-port valves integrated
M8 connector without cable (RN)

A side valve: Normally closed,
B side valve: Normally closed

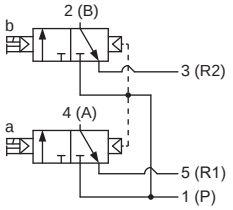

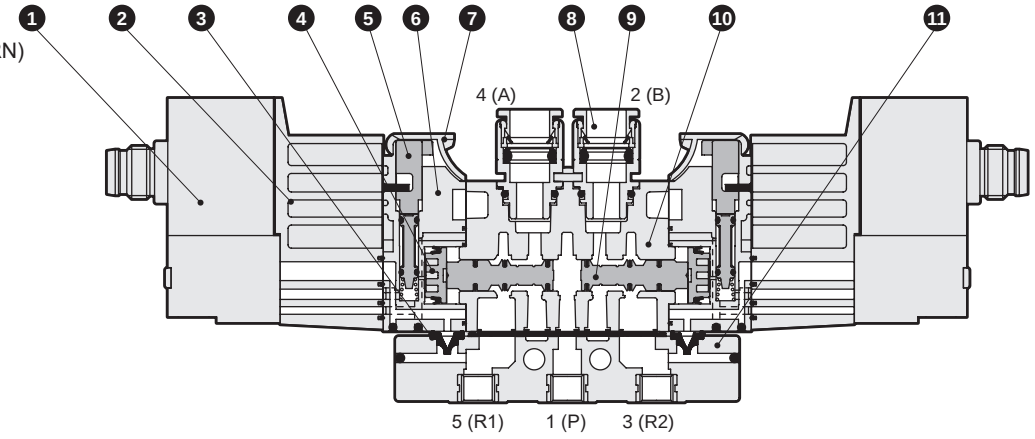

3GD2660EJ

● Two 3-port valves integrated
M8 connector without cable (RN)

A side valve: Normally closed,
B side valve: Normally closed

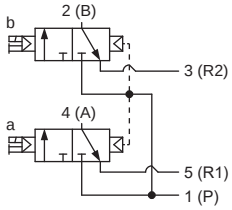

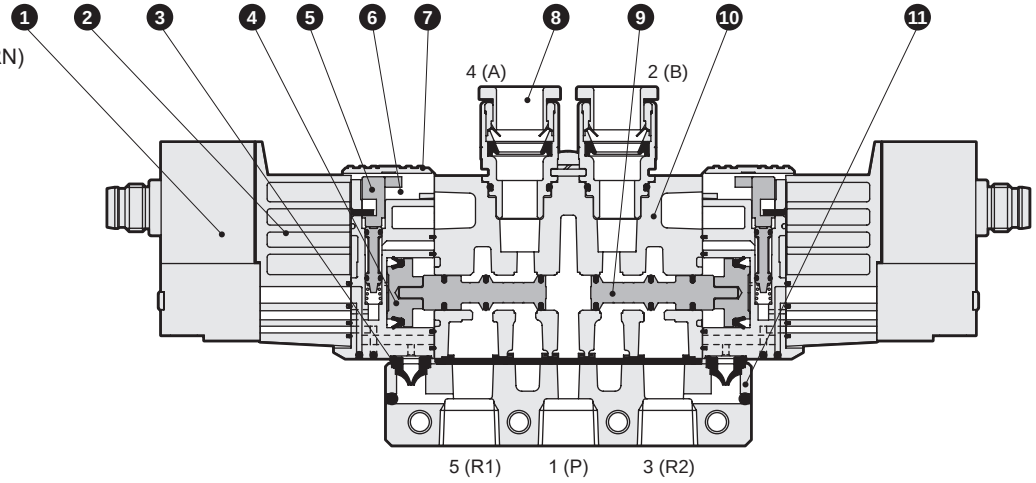

Main parts list

No.	Part name	Material
1	Coil assembly	–
2	Adapter	Resin
3	Pilot exhaust check valve	Hydrogenated nitrile rubber
4	Piston D assembly	–
5	Manual override	Resin
6	Piston chamber	Resin
7	Manual protection cover	Resin
8	Cartridge push-in fitting	–
9	Spool assembly	–
10	Body	Aluminum alloy die-casting
11	Piping adapter	Resin

Parts list

No.	Part name		Model No.
8	Cartridge push-in fitting and related parts	ø1.8 straight	4G1R-JOINT-C18
		ø4 straight	4G1R-JOINT-C4
		ø6 straight	4G1R-JOINT-C6
		Plug cartridge	4G1R-JOINT-CPG

Internal structure diagram and parts list

4GD110EJ

● 2-position single
M8 connector without cable (RN)

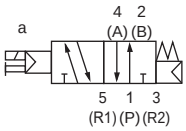

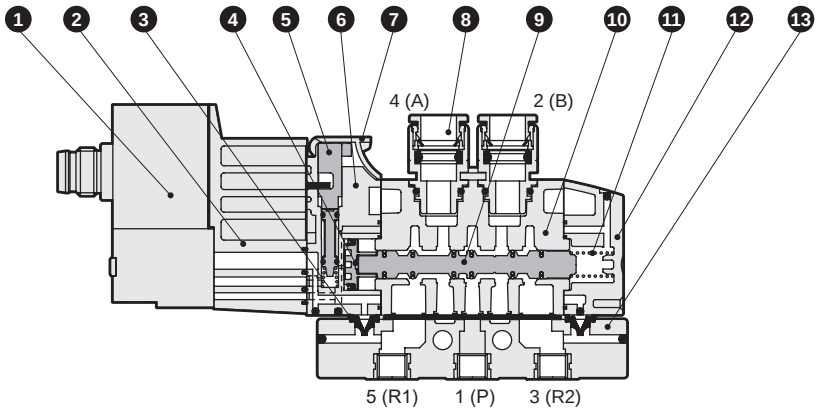

4GD120EJ

● 2-position double
M8 connector without cable (RN)

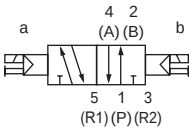

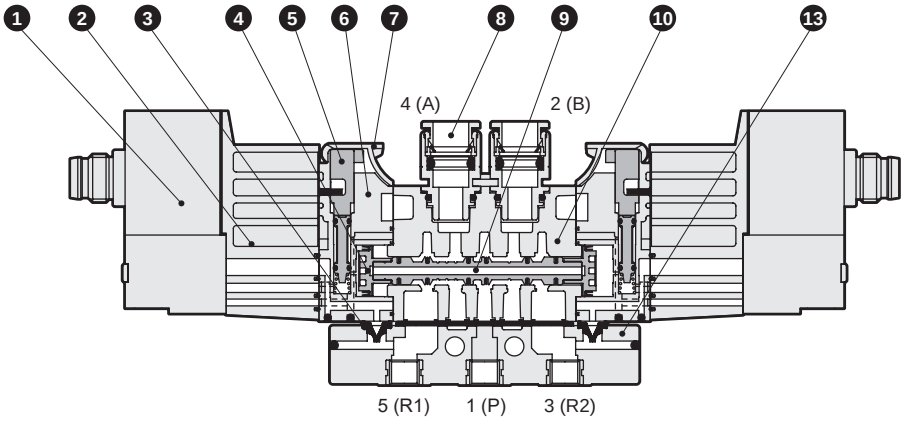

4GD1 $^{3}_{4}_{5}$ 0EJ

● 3-position
M8 connector without cable (RN)

All ports closed

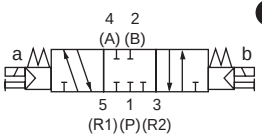

A/B/R connection

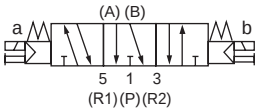

P/A/B connection

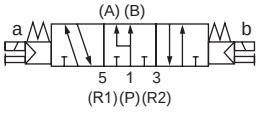

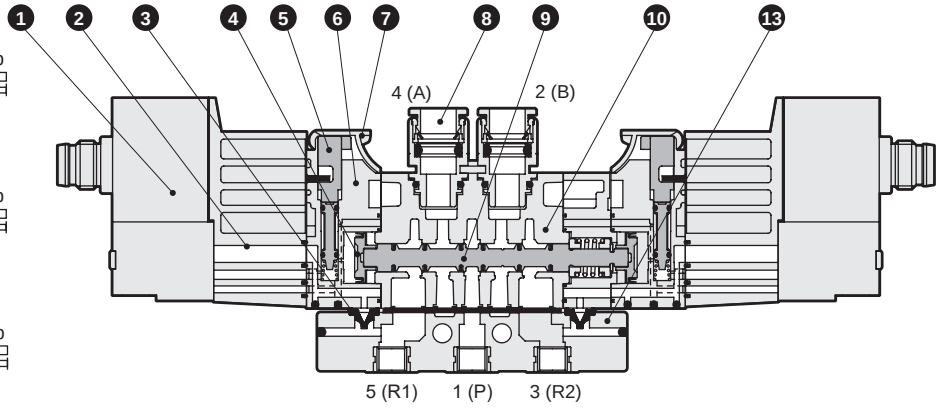

Main parts list

No.	Part name	Material
1	Coil assembly	–
2	Adapter	Resin
3	Pilot exhaust check valve	Hydrogenated nitrile rubber
4	Piston D assembly	–
5	Manual override	Resin
6	Piston chamber	Resin
7	Manual protection cover	Resin
8	Cartridge push-in fitting	–
9	Spool assembly	–
10	Body	Aluminum alloy die-casting
11	Spool spring	Stainless steel
12	Cap	Resin
13	Piping adapter	Resin

Parts list

No.	Part name		Model No.
8	Cartridge push-in fitting and related parts	ø1.8 straight	4G1R-JOINT-C18
		ø4 straight	4G1R-JOINT-C4
		ø6 straight	4G1R-JOINT-C6
		Plug cartridge	4G1R-JOINT-CPG

Internal structure diagram and parts list

4GD210EJ/4GD310EJ

● 2-position single
M8 connector without cable (RN)

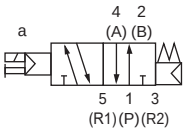

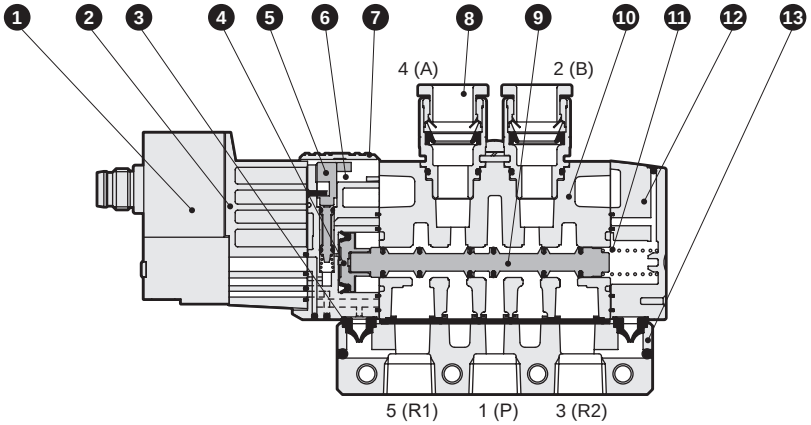

4GD220EJ/4GD320EJ

● 2-position double
M8 connector without cable (RN)

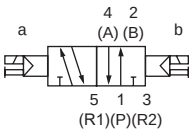

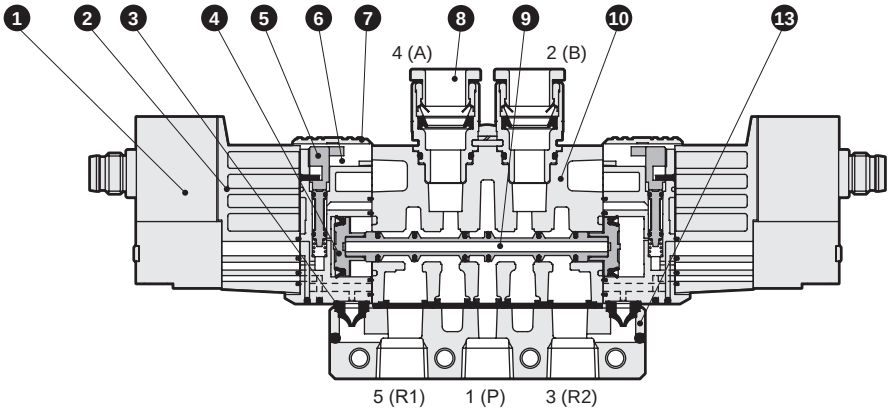

4GD2 $^{3}_{4}_{5}$ 0EJ/4GD3 $^{3}_{4}_{5}$ 0EJ

● 3-position
M8 connector without cable (RN)

All ports closed

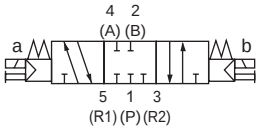

A/B/R connection

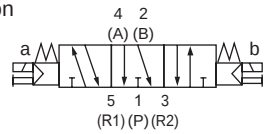

P/A/B connection

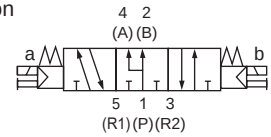

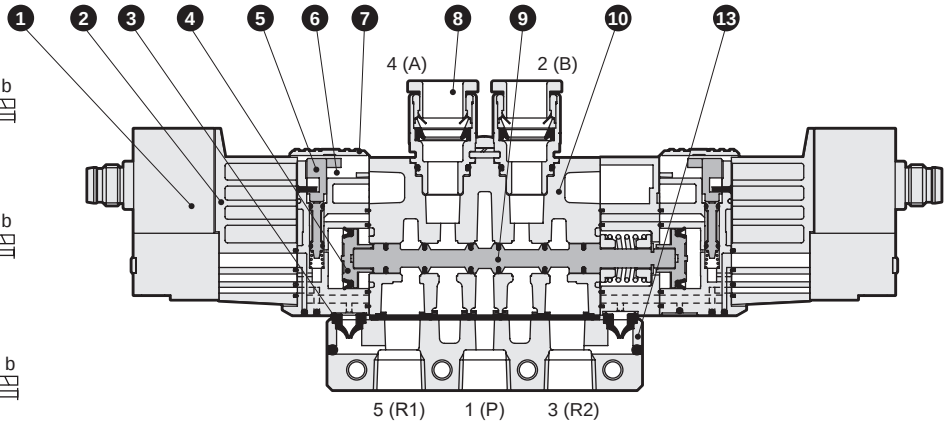

Main parts list

No.	Part name	Material
1	Coil assembly	–
2	Adapter	Resin
3	Pilot exhaust check valve	Hydrogenated nitrile rubber
4	Piston D assembly	–
5	Manual override	Resin
6	Piston chamber	Resin
7	Manual protection cover	Resin
8	Cartridge push-in fitting	–
9	Spool assembly	–
10	Body	Aluminum alloy die-casting
11	Spool spring	Stainless steel
12	Cap	Resin
13	Piping adapter	Aluminum alloy die-casting

Parts list

No.	Part name			Model No.
8	Cartridge push-in fitting and related parts	4G2	ø4 straight	4G2R-JOINT-C4
			ø6 straight	4G2R-JOINT-C6
			ø8 straight	4G2R-JOINT-C8
		4G3	ø6 straight	4G3R-JOINT-C6
			ø8 straight	4G3R-JOINT-C8
			ø10 straight	4G3R-JOINT-C10

Internal structure diagram and parts list

4GD410EJ

● 2-position single
M8 connector without cable (RN)

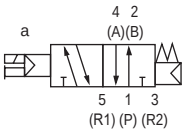

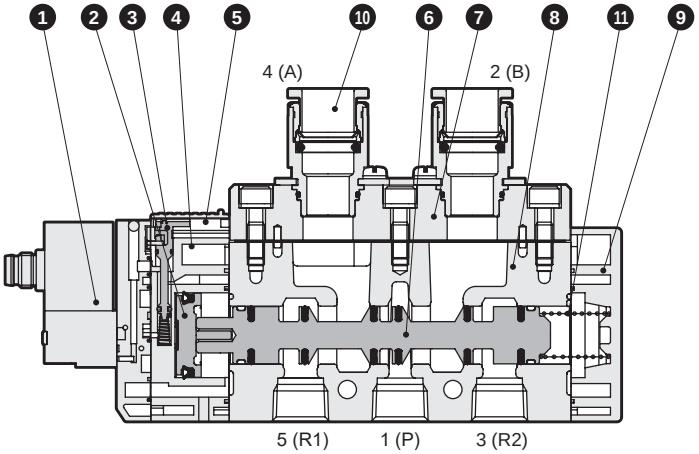

4GD420EJ

● 2-position double
M8 connector without cable (RN)

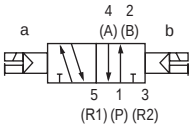

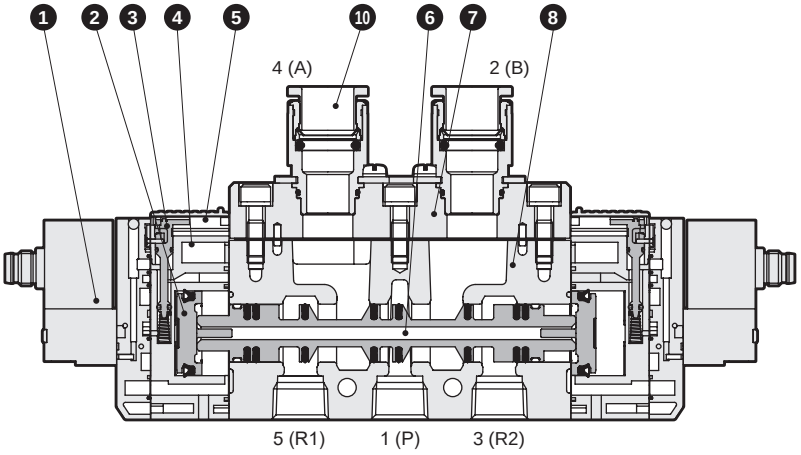

4GD4 $^{3}_{4}_{5}$ 0EJ

● 3-position
M8 connector without cable (RN)

All ports closed

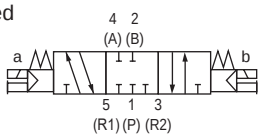

A/B/R connection

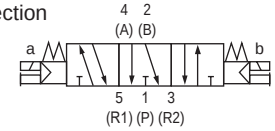

P/A/B connection

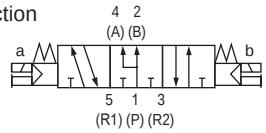

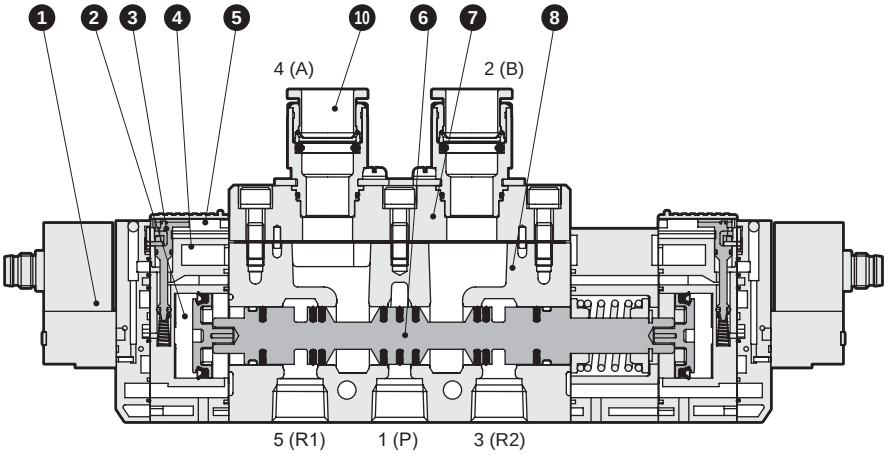

Main parts list

No.	Part name	Material
1	Coil assembly	-
2	Piston assembly	-
3	Manual override	Resin
4	Piston chamber	Resin
5	Manual protection cover	Resin
6	Spool assembly	-
7	Fitting adapter	Aluminum
8	Body	Aluminum alloy die-casting
9	Cap	Resin
10	Cartridge push-in fitting	-
11	Spool spring	Stainless steel

Parts list

No.	Part name		Model No.
-	Cartridge push-in fitting and related parts	ø8 straight	4G4-JOINT-C8
		ø10 straight	4G4-JOINT-C10
		ø12 straight	4G4-JOINT-C12

Dimensions

4GD110EJ

● 2-position single without connector (RN)

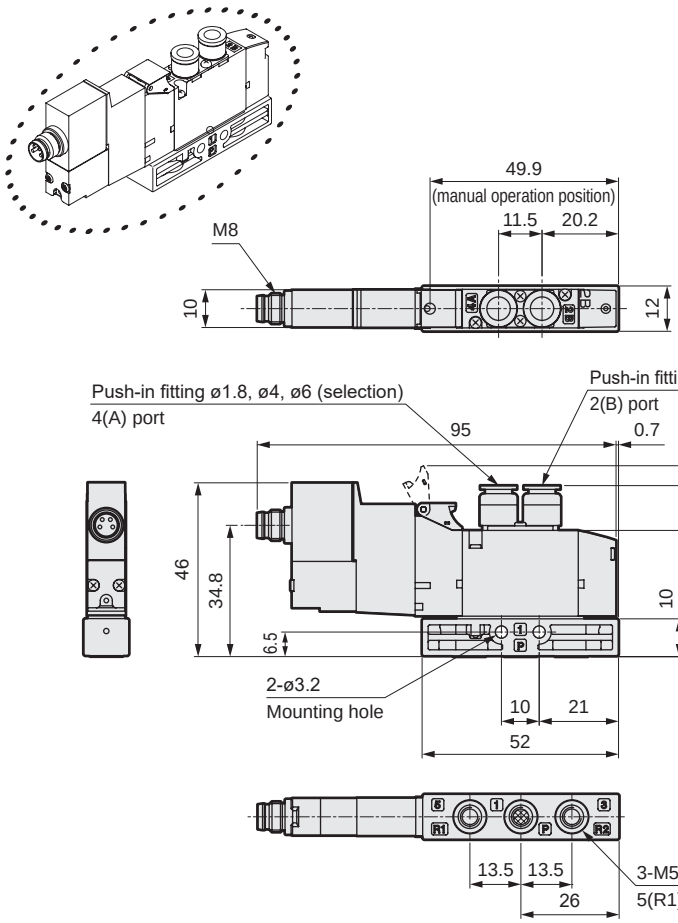

● Mounting plate (P)

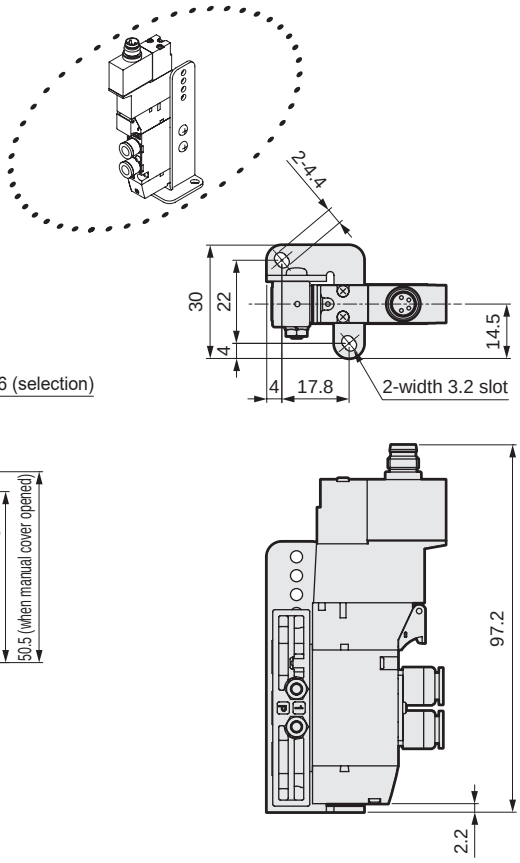

● M5 female thread (M5)

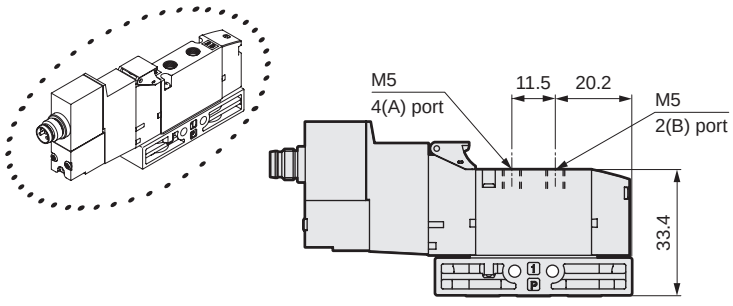

● M8 connector/L-type cable (R2)

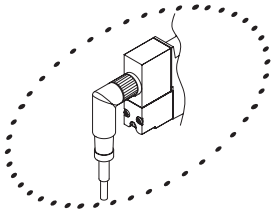

● M8 connector/straight cable (R1)

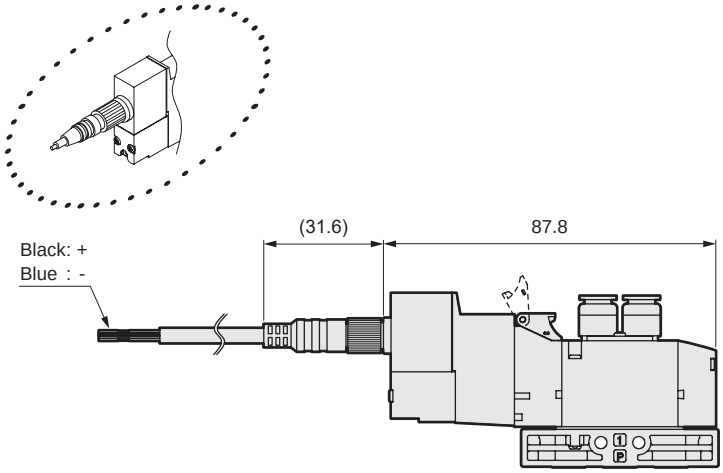

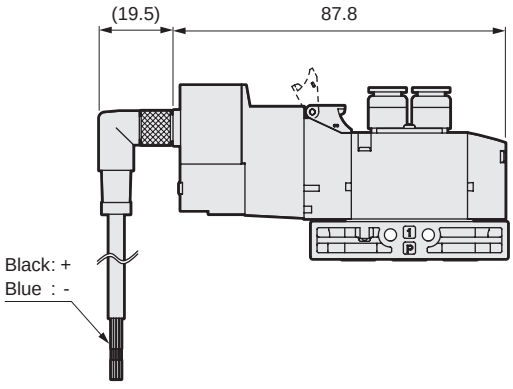

Dimensions

4GD120EJ

● 2-position double without connector (RN)

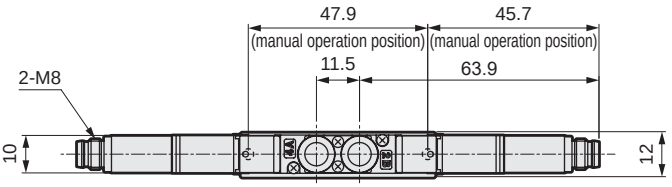

3GD1660EJ

● Two 3-port valves integrated without connector (RN)

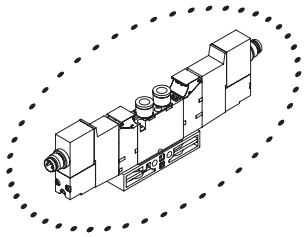

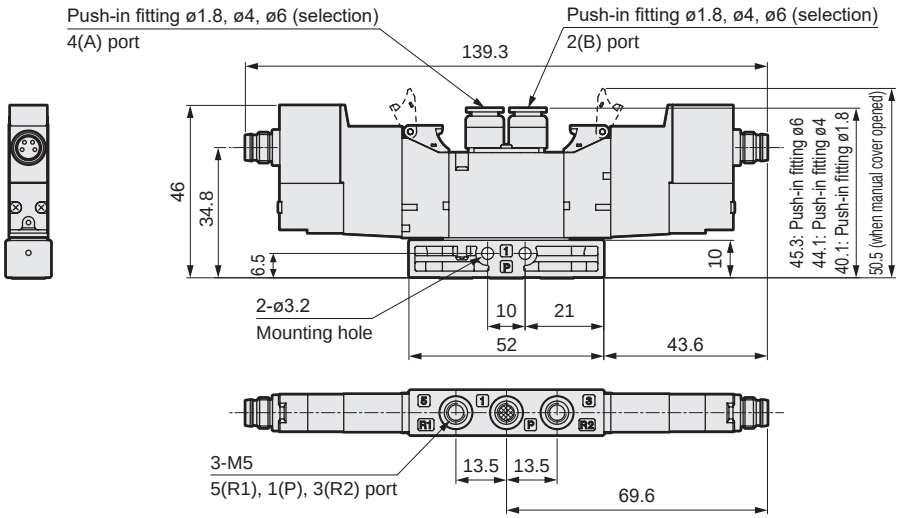

● M5 female thread (M5)

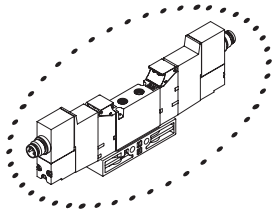

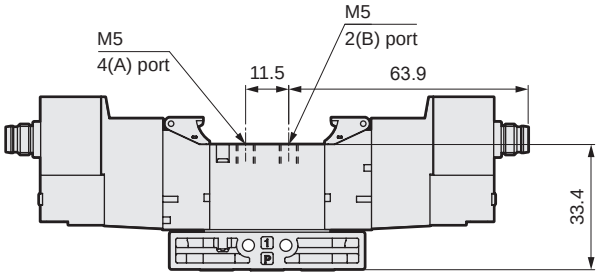

● M8 connector/straight cable (R1)

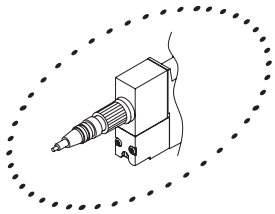

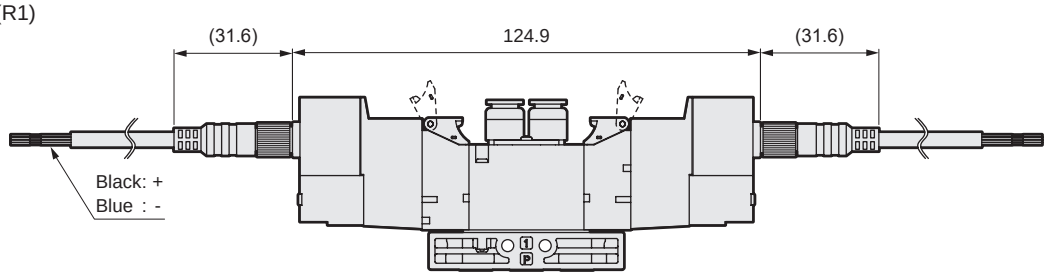

● M8 connector/L-type cable (R2)

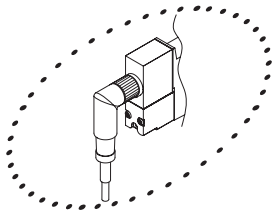

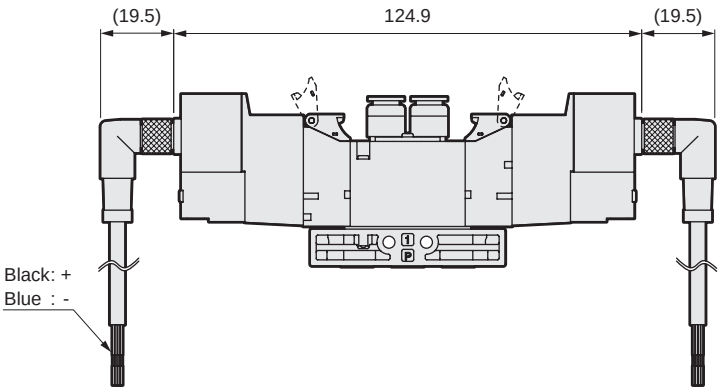

Dimensions

4GD1$^{3}_{4}_{5}$EJ

● 3-position without connector (RN)

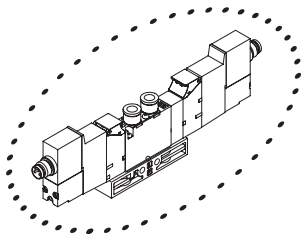

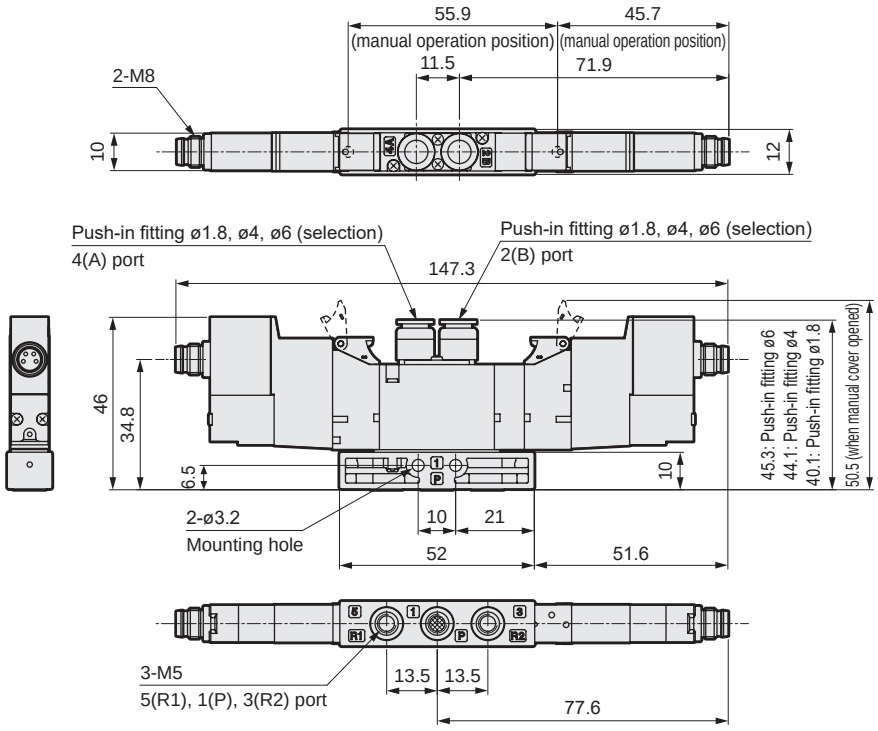

● M5 female thread (M5)

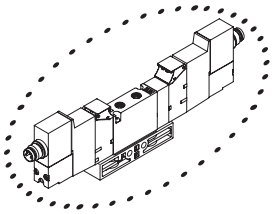

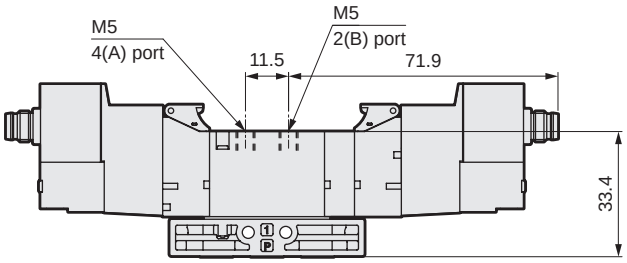

● M8 connector/straight cable (R1)

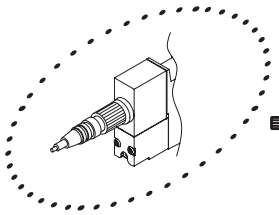

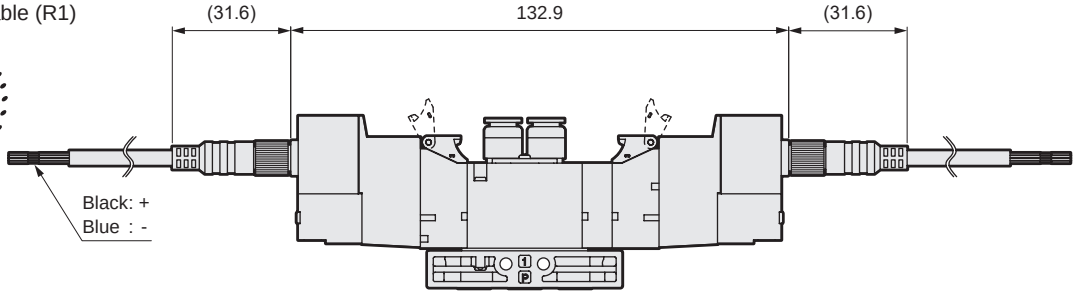

● M8 connector/L-type cable (R2)

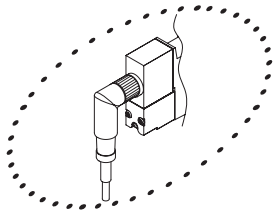

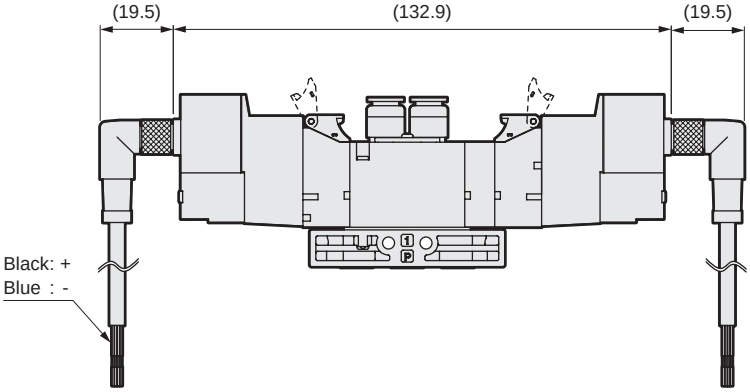

Dimensions

4GD210EJ

● 2-position single without connector (RN)

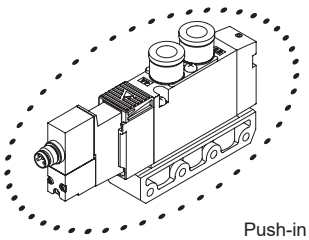

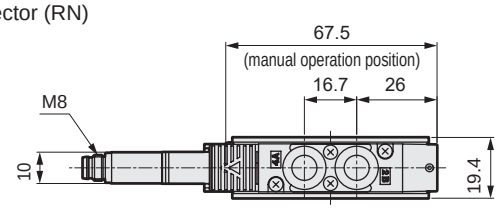

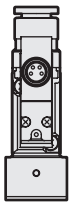

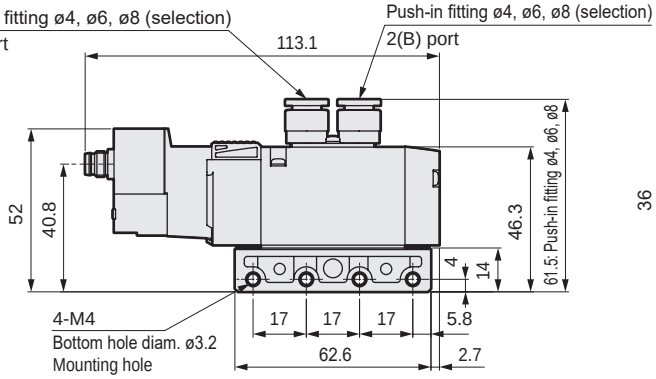

* Refer to page 1774 for details on mounting holes.

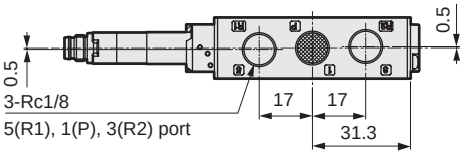

● Mounting plate (P)

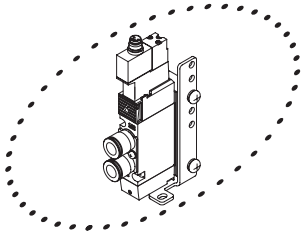

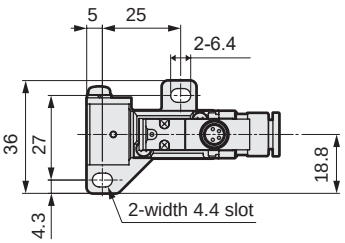

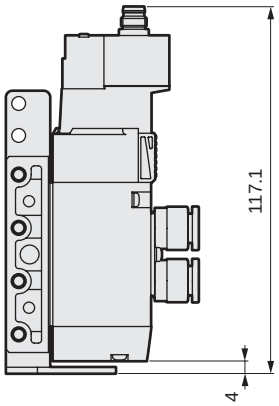

● Rc1/8 female thread (06)

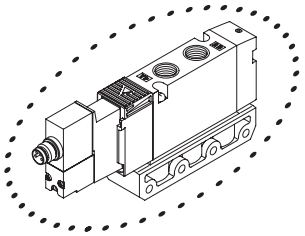

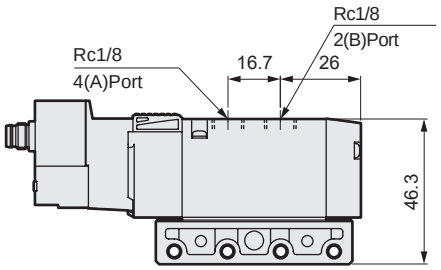

● M8 connector/straight cable (R1)

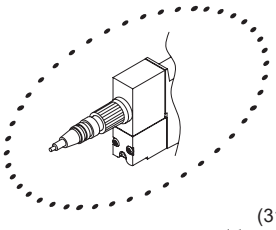

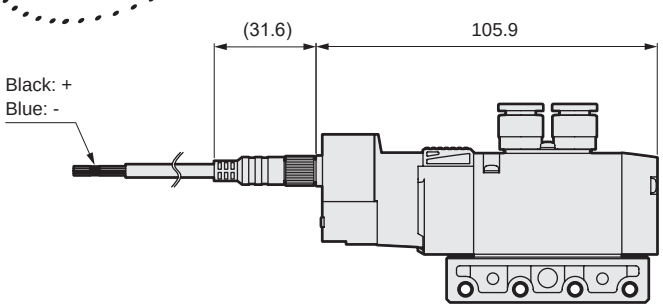

● M8 connector/L-type cable (R2)

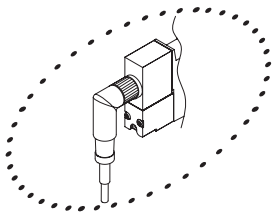

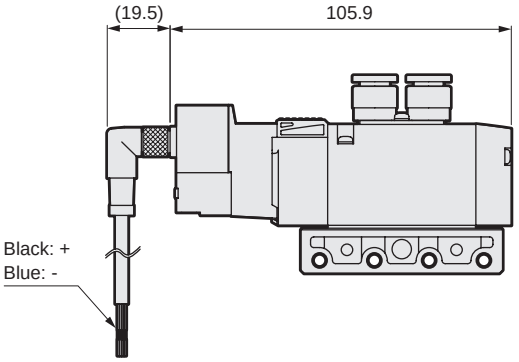

Dimensions

4GD220EJ

● 2-position double without connector (RN)

3GD2660EJ

● Two 3-port valves integrated without connector (RN)

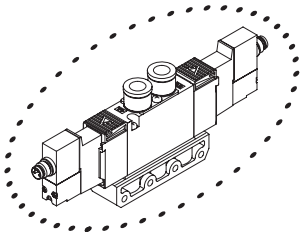

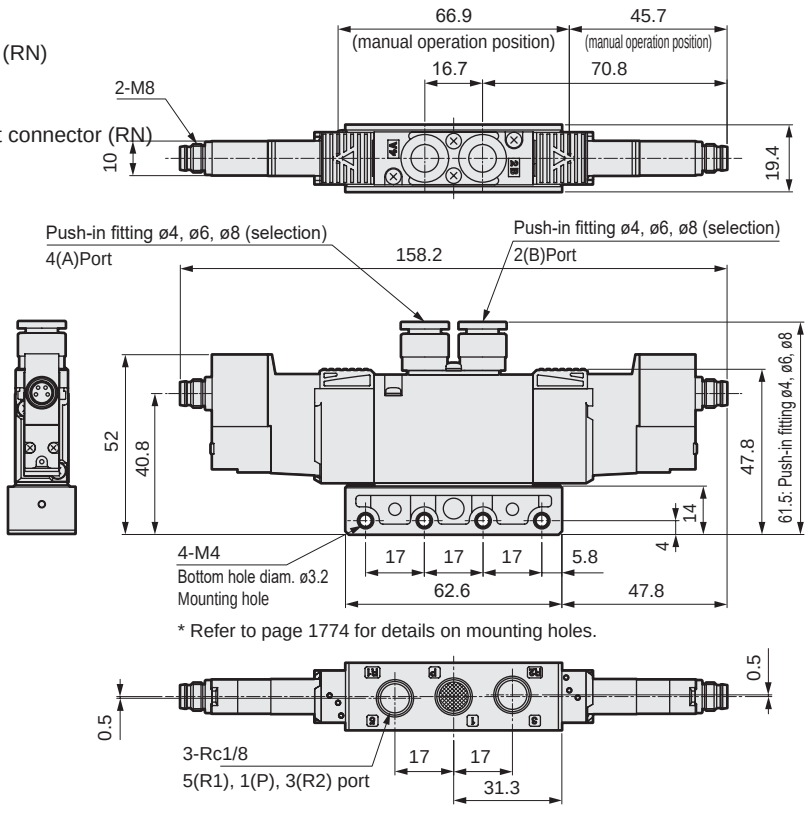

* Refer to page 1774 for details on mounting holes.

● Rc1/8 female thread (06)

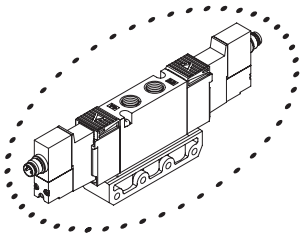

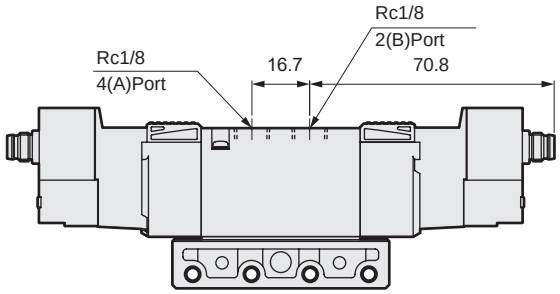

● M8 connector/straight cable (R1)

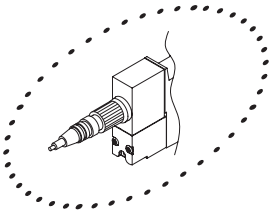

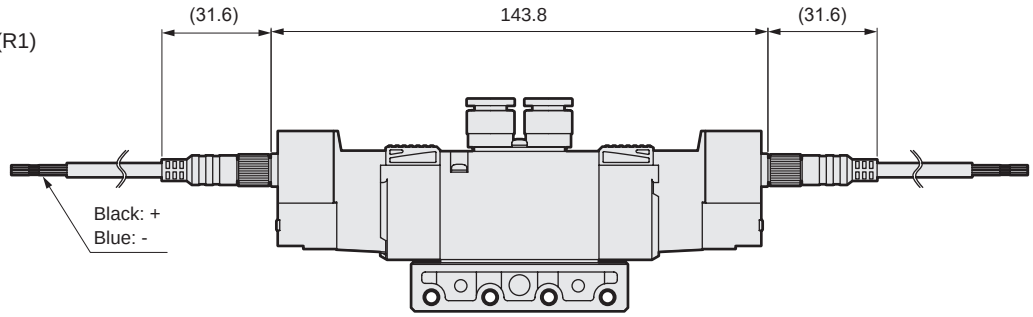

● M8 connector/L-type cable (R2)

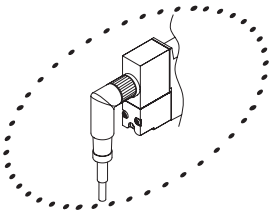

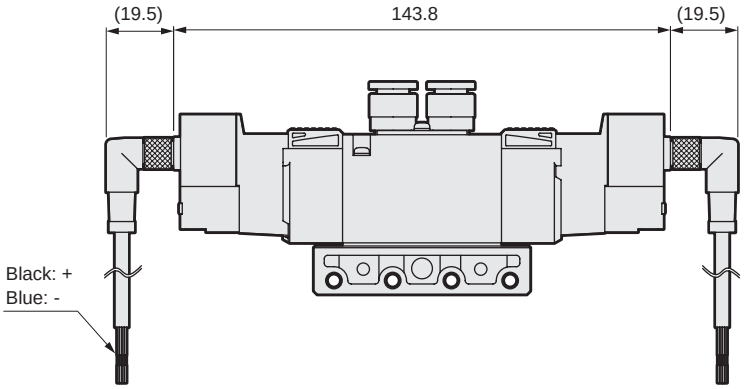

Dimensions

4GD2 $^{3}_{4}_{5}$ 0EJ

● 3-position without connector (RN)

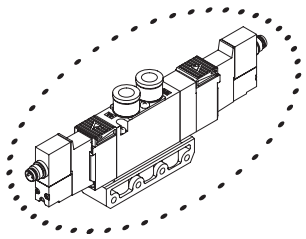

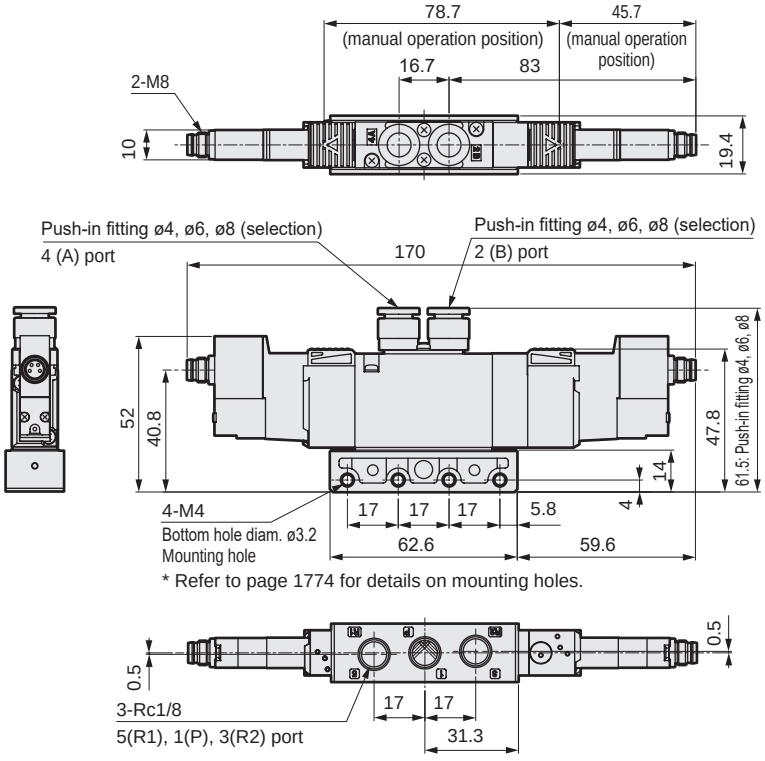

* Refer to page 1774 for details on mounting holes.

● Rc1/8 female thread (06)

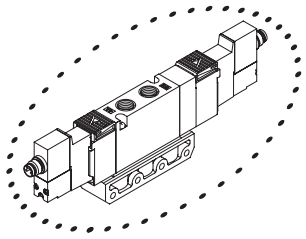

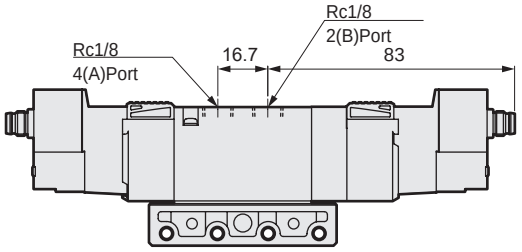

● M8 connector/straight cable (R1)

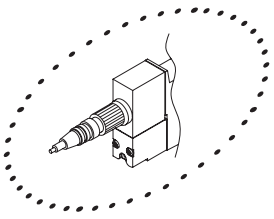

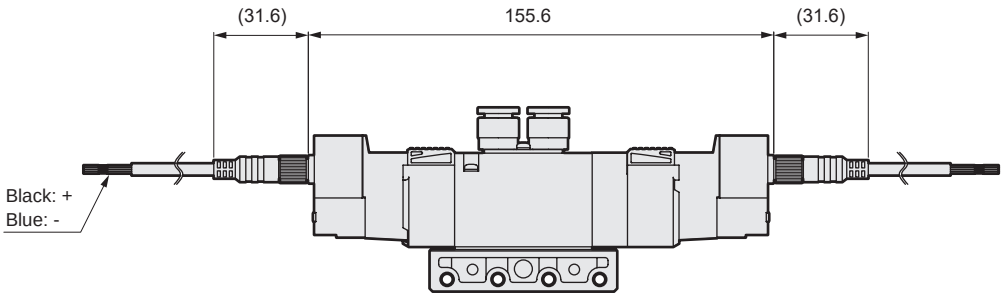

● M8 connector/L-type cable (R2)

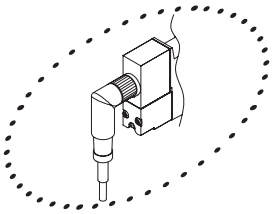

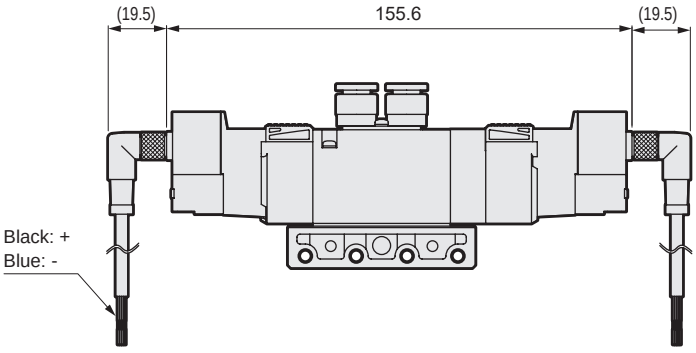

Dimensions

4GD310EJ

● 2-position single without connector (RN)

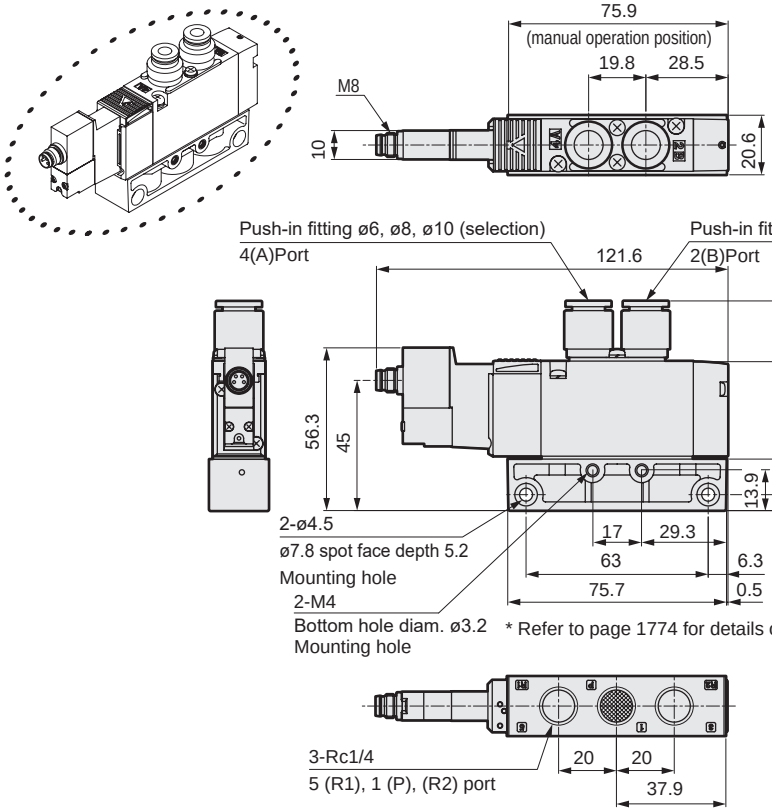

● Mounting plate (P)

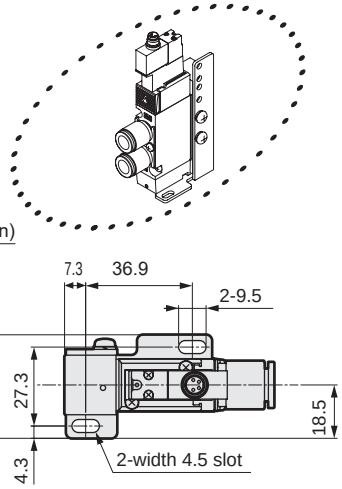

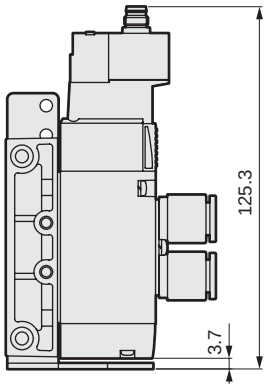

● Rc1/4 female thread (08)

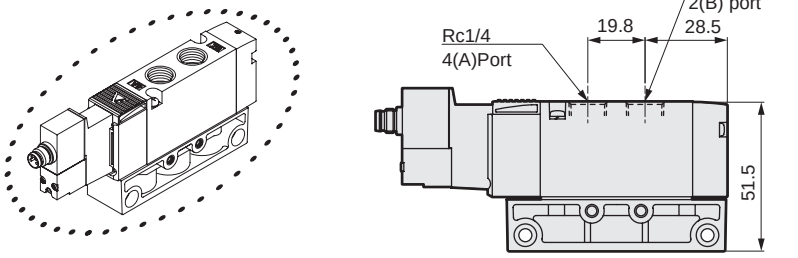

● M8 connector/straight cable (R1)

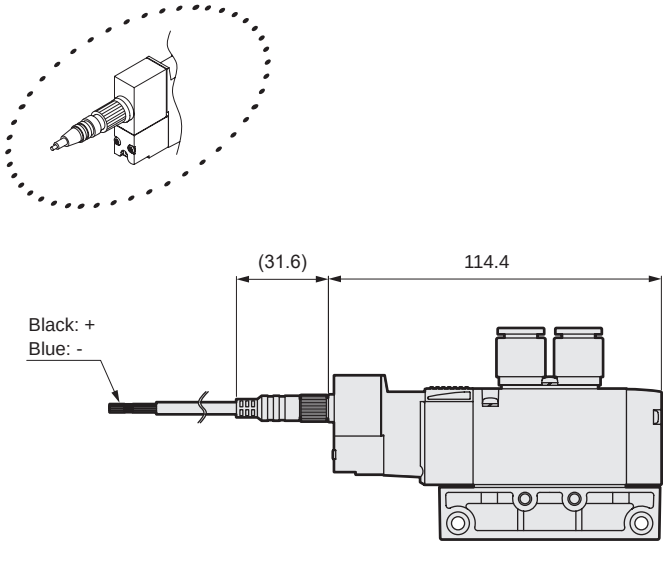

● M8 connector/L-type cable (R2)

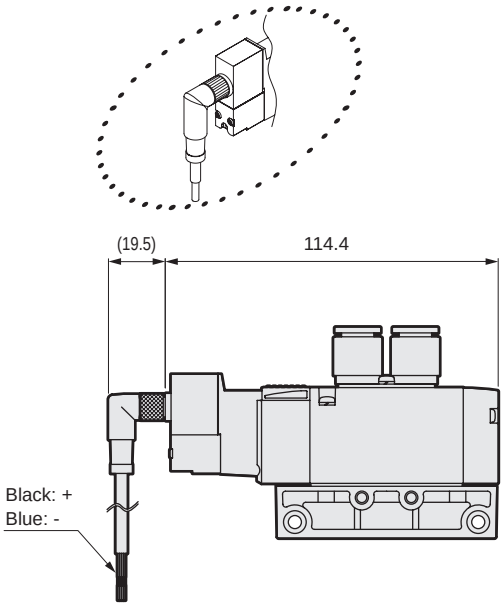

Dimensions

4GD320EJ

● 2-position double without connector (RN)

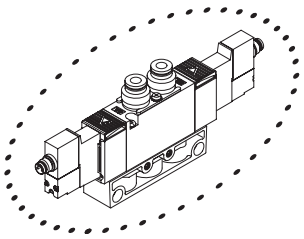

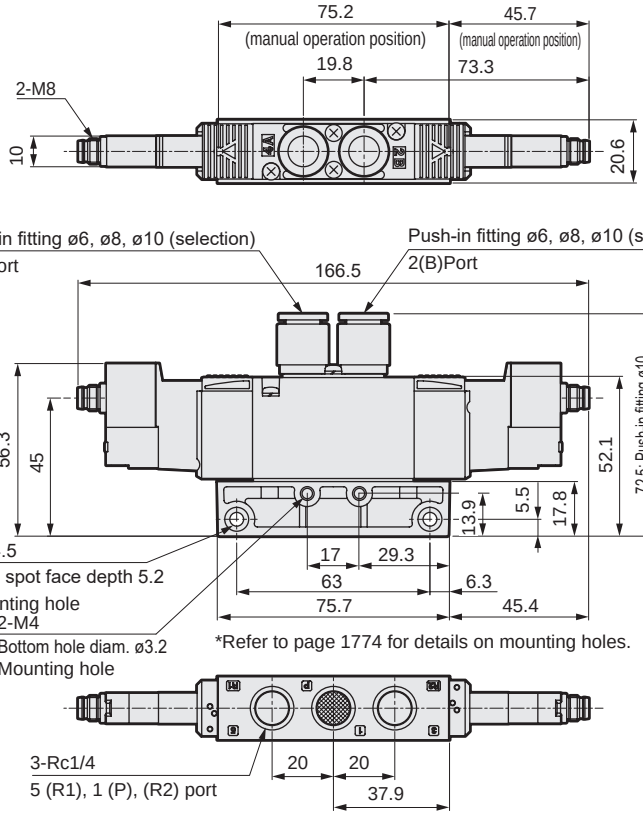

● Rc1/4 female thread (08)

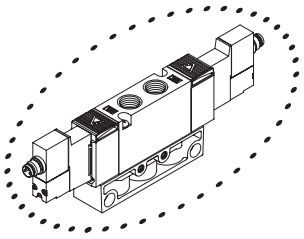

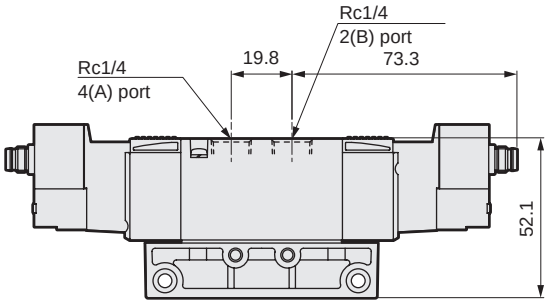

● M8 connector/straight cable (R1)

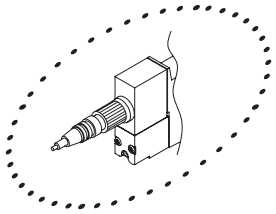

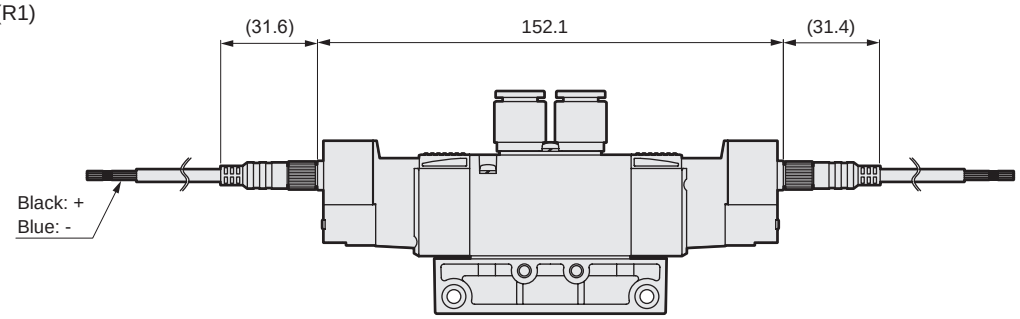

● M8 connector/L-type cable (R2)

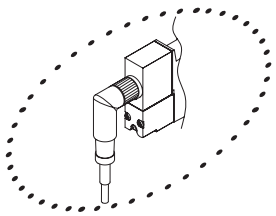

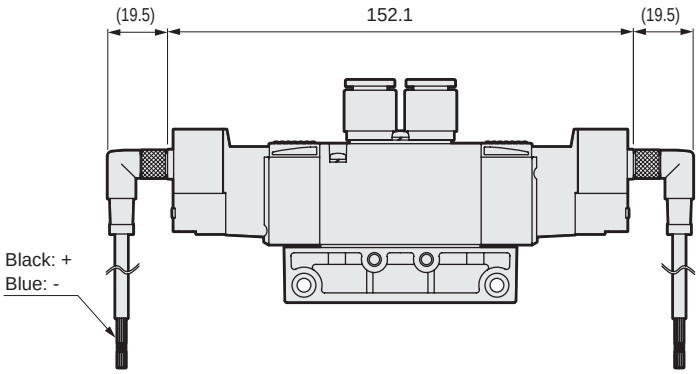

Dimensions

4GD3$^{3}_{4}_{5}$0EJ

● 3-position without connector (RN)

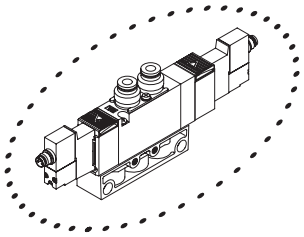

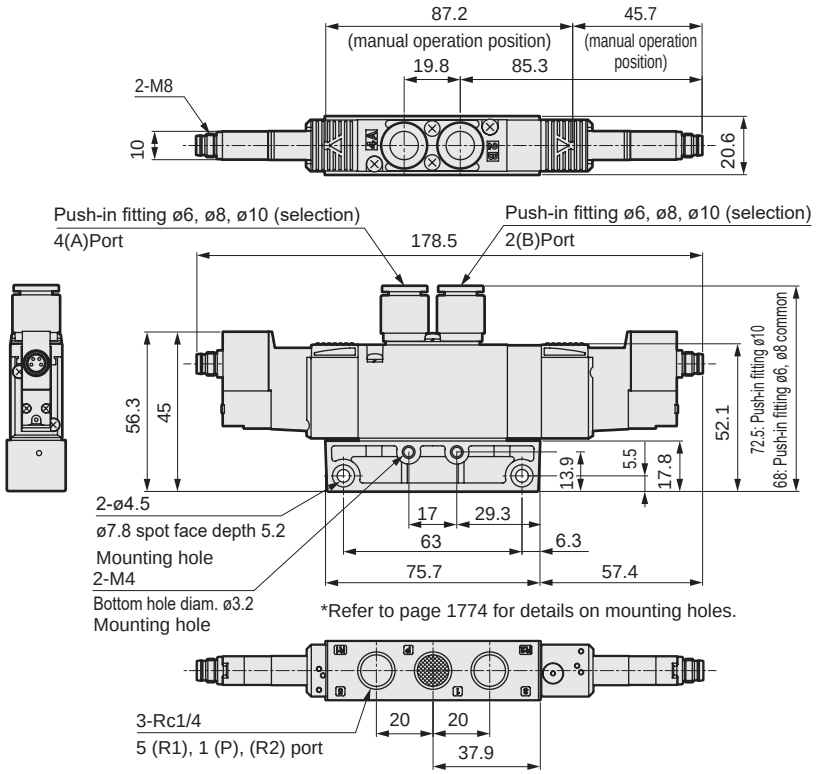

● Rc1/4 female thread (08)

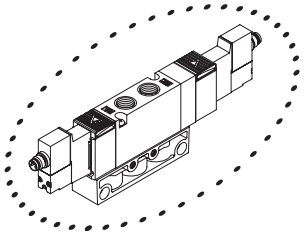

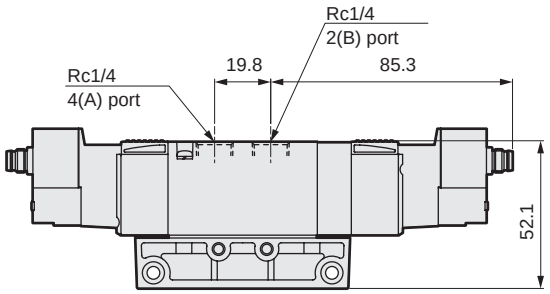

● M8 connector/straight cable (R1)

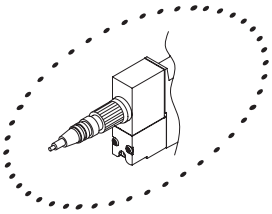

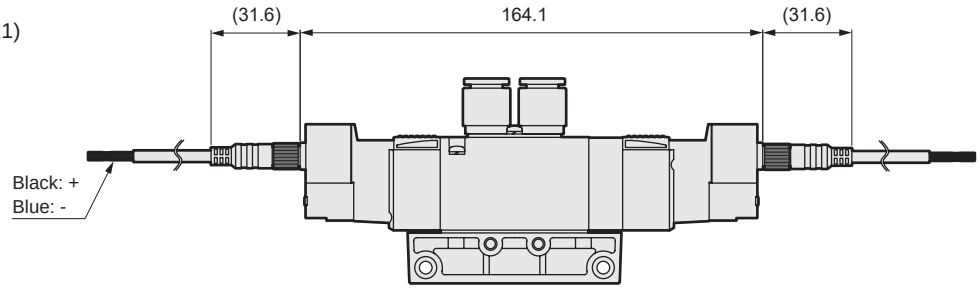

● M8 connector/L-type cable (R2)

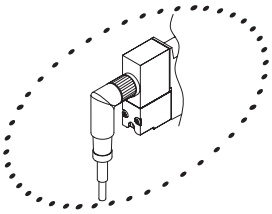

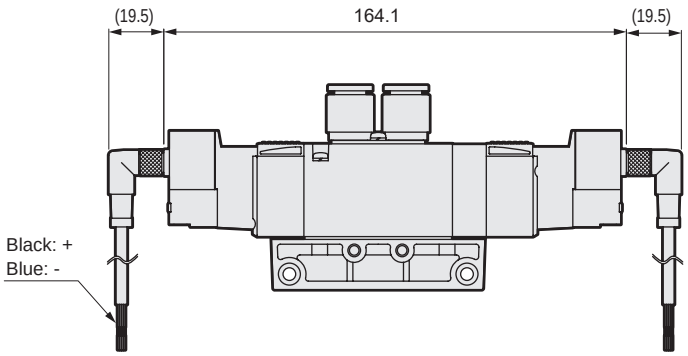

Dimensions

4GD410EJ

● 2-position single without connector (RN)

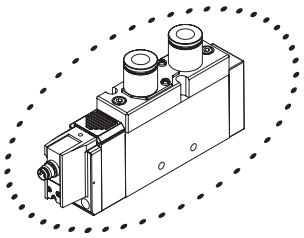



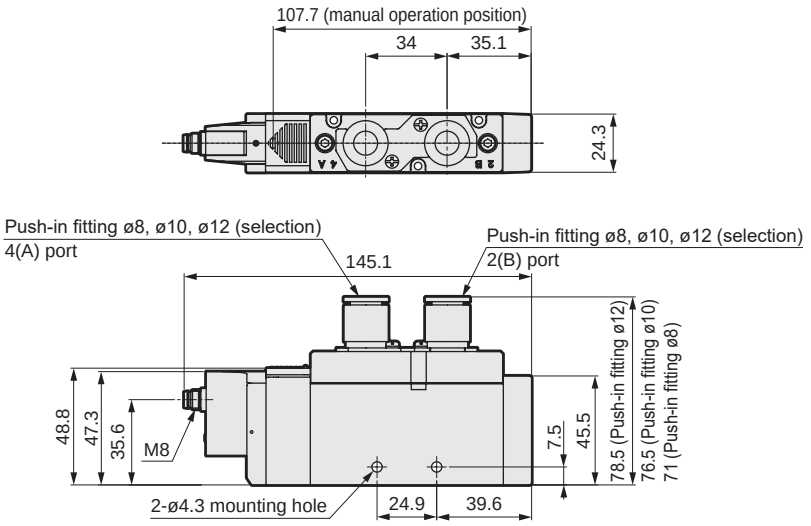

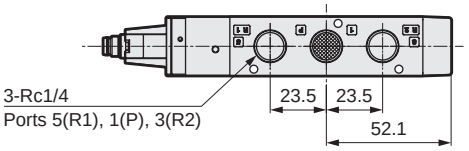

● Rc3/8 female thread (10)

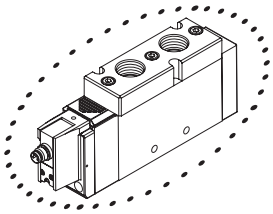

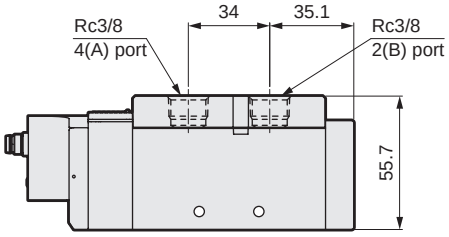

● M8 connector/straight cable (R1)

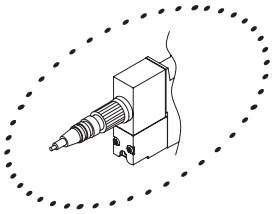

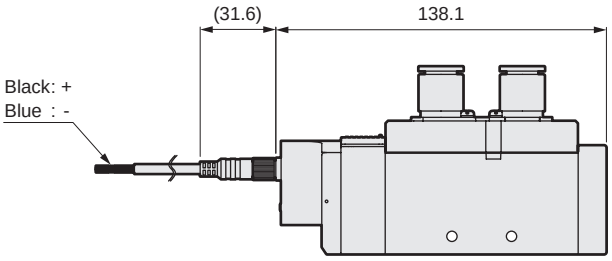

● M8 connector/L-type cable (R2)

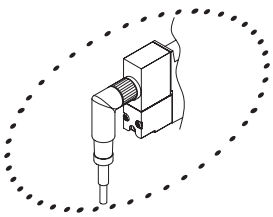

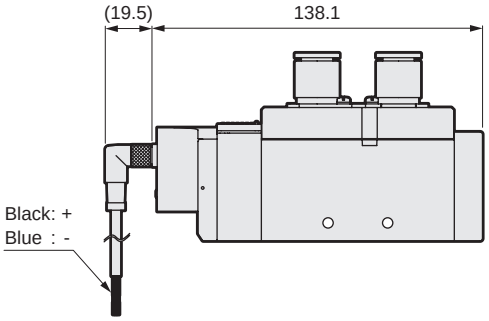

Dimensions

4GD420EJ

● 2-position double without connector (RN)

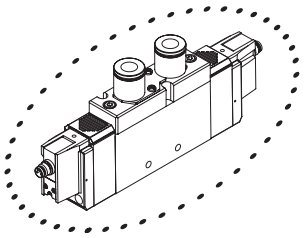

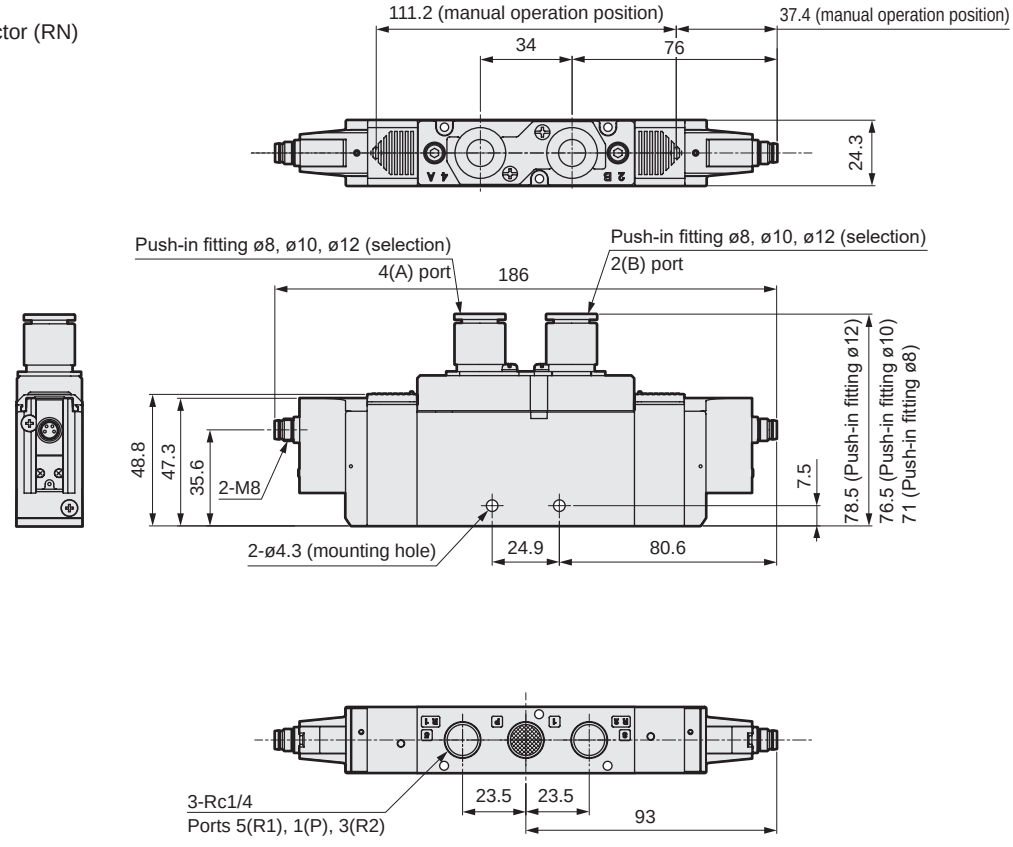

● Rc3/8 female thread (10)

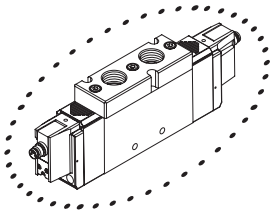

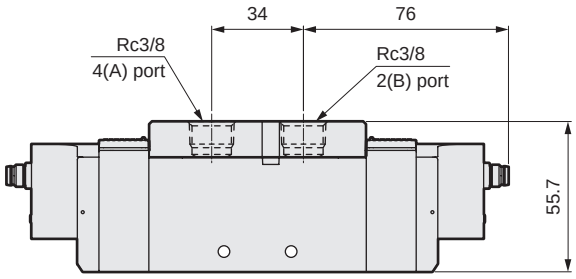

● M8 connector/straight cable (R1)

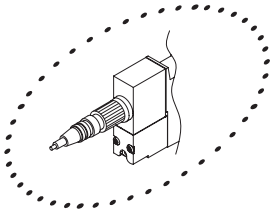

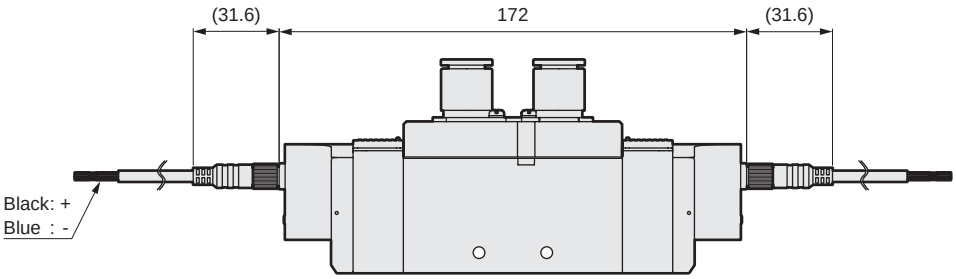

● M8 connector/L-type cable (R2)

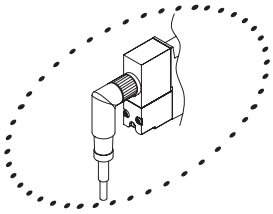

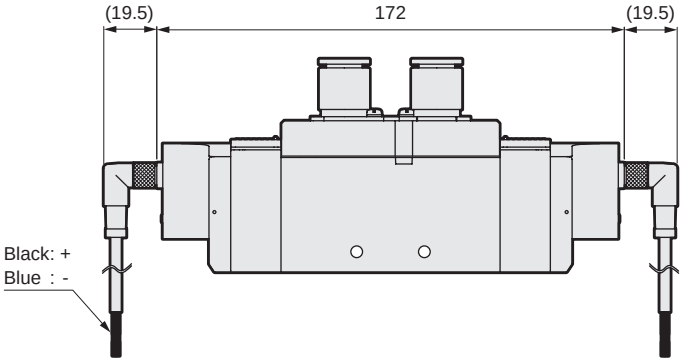

Dimensions

4GD4 $^{3}_{4}_{5}$ 0EJ

● 3-position without connector (RN)

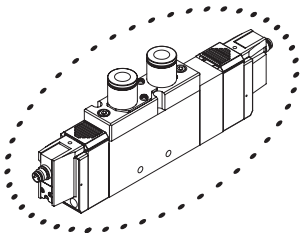

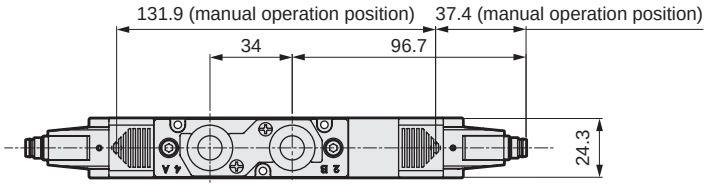

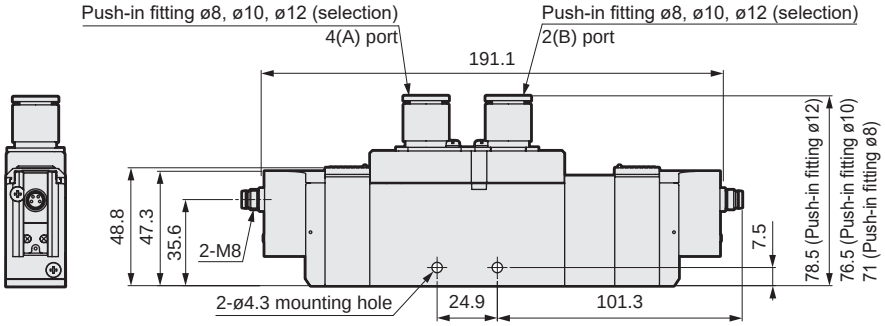

● Rc3/8 female thread (10)

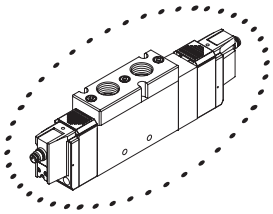

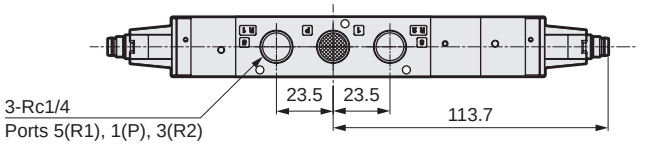

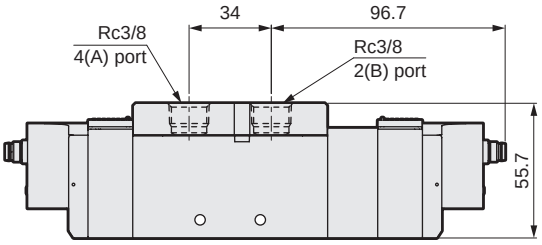

● M8 connector/straight cable (R1)

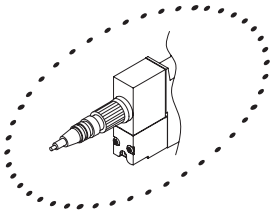

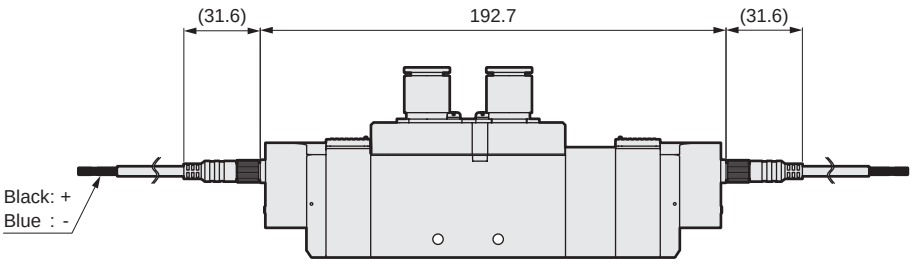

● M8 connector/L-type cable (R2)

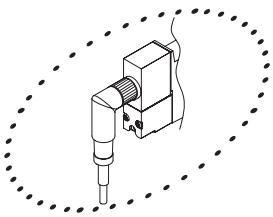

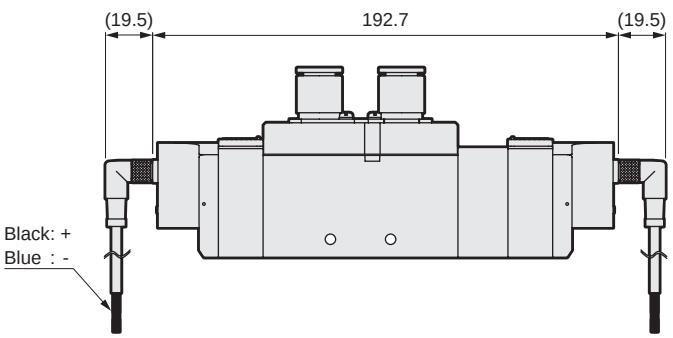

MEMO

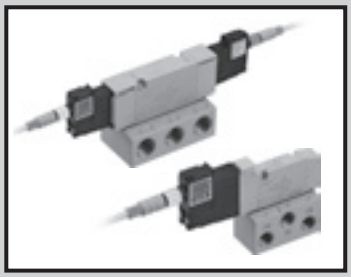

Discrete valve
Base piping

3GE1/2 / 4GE1/2/3/4*0EJ Series

● Applicable cylinder bore size: ø20 to ø160

CE RoHS

JIS symbol

● Two 3-port valves integrated
(A side valve: NC, B side valve: NC)

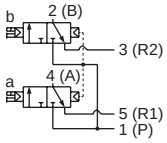

● 5-port valve

2-position single

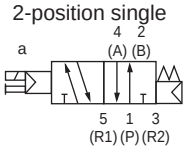

2-position double

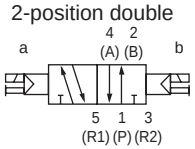

3-position
All ports closed

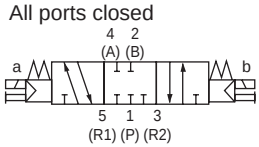

3-position A/B/R connection

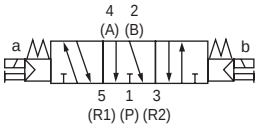

3-position P/A/B connection

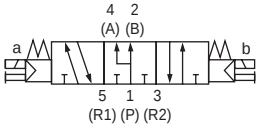

Common specifications

1 MPa ≈ 145.0 psi, 1 MPa = 10 bar

Item		Description
Valve and operation		Pilot operated soft spool valve
Working fluid		Compressed air
Max. working pressure MPa		0.7 (≈101 psi, 7 bar)
Min. working pressure MPa		0.2 (≈29 psi, 2 bar)
Proof pressure MPa		1.05 (≈152 psi, 10 bar)
Ambient temperature °C		-5 (23°F) to 55 (131°F) (no freezing)
Fluid temperature °C		5 (41°F) to 55 (131°F)
Manual override		Non-locking/locking common (standard)
Pilot exhaust method	Internal pilot	Main valve/pilot valve common exhaust
Lubrication *1		Not required
Degree of protection *2		IP67
Vibration resistance m/s^2		50 or less
Impact resistance m/s^2		300 or less
Atmosphere		Cannot be used in corrosive gas environments

Solenoid specifications

Item	Description
Rated voltage V	12 DC
Voltage fluctuation range	+10% -20%
Rated current A	0.05
Power consumption W (*3)	0.6
Thermal class	B

*1: Use turbine oil Class 1 ISO VG32 for lubrication.
Excessive or intermittent lubrication results in unstable operation.

*2: Tested according to the test method for IP67 (IEC60529) standards. Note that while the unit is protected from dust and water, it cannot be used immersed in water. Countermeasures such as covering the unit should also be taken if using in environments where it will be constantly exposed to dust or water.

Intrinsic safety explosion-proof specifications

Item	Description
Types of explosion-proof structures	Intrinsic safety explosion-proof structure (ib)
Target gas or above listed ignitability and flame-proof grade	Ex ib IIC T4 Gb
Barrier input voltage	24 VDC
Intrinsic safety circuit allowable voltage Ui	30 VDC
Intrinsic safety circuit allowable current Ii	200 mA
Intrinsic safety circuit allowable power Pi	0.68 W
Internal inductance Li	Value that can be ignored
Internal capacitance Ci	Value that can be ignored

Individual specifications

Port size	3GE1/4GE1	3GE2/4GE2	4GE3	4GE4
2, 4-port (port A/B)	Rc1/8	Rc1/4	Rc1/4, Rc3/8	Rc3/8, Rc1/2
1, 3, 5-port (port P/R1/R2)	Rc1/8	Rc1/4	Rc1/4, Rc3/8	Rc3/8, Rc1/2

Performance/characteristics by model

Item			3GE1		3GE2		4GE1		4GE2		4GE3		4GE4	
			ON	OFF	ON	OFF	ON	OFF	ON	OFF	ON	OFF	ON	OFF
Response time ms	Two 3-port valves integrated		15	35	20	50	–	–	–	–	–	–	–	–
	2-position	Single	–	–	–	–	15	35	20	40	25	60	100	110
		Double	–	–	–	–	25	25	30	30	35	35	110	110
	3-position	ABR connection	–	–	–	–	20	40	25	45	35	60	100	160

The response times are values under continuous operation at supply pressure of 0.5 MPa, at rated voltage and at 20°C without lubrication. They depend on the pressure and the lubricant quality.

Weight

Item			4GE1	4GE2	4GE3	4GE4
Weight g	2-position	Single	97(54)	173(91)	246(117)	551(241)
		Double	118(74)	194(112)	267(138)	584(275)
	3-position	ABR connection	120(77)	202(120)	277(148)	616(306)

· Values in ( ) do not include the piping adapter. These values include the M8 connector (straight).
· The weight of the two 3-port valves integrated type is the same as that of the 2-position double.

Flow characteristics

Model No.	Solenoid position		P→A/B		A/B→R1/R2	
			C[dm³/(s·bar)]	b	C[dm³/(s·bar)]	b
3GE1 4GE1	Two 3-port valves integrated		0.92	0.08	1.1	0.26
	2-position		1.3	0.27	1.2	0.22
	3-position	All ports closed	1.1	0.31	1.1	0.27
		ABR connection	1.1	0.31	1.3	0.29
		PAB connection	1.4	0.30	1.1	0.26
3GE2 4GE2	Two 3-port valves integrated		1.7	0.42	2.1	0.26
	2-position		2.6	0.20	2.6	0.19
	3-position	All ports closed	2.3	0.32	2.2	0.22
		ABR connection	2.2	0.23	2.6	0.16
		PAB connection	2.4	0.10	2.4	0.22
4GE3	2-position		4.3	0.24	4.2	0.24
	3-position	All ports closed	3.3	0.40	3.4	0.27
		ABR connection	3.3	0.36	4.2	0.18
		PAB connection	4.5	0.28	3.4	0.30
4GE4	2-position		11.0	0.19	13.0	0.19
	3-position	All ports closed	9.1	0.11	12.0	0.27
		ABR connection	8.8	0.28	13.9	0.25
		PAB connection	10.0	0.06	12.0	0.24

*1: Effective cross-sectional area "S" and sonic conductance "C" are converted as S ≈ 5.0 x C.

How to order (solenoid valve single unit)

● Single unit

4GE1 1 0 EJ - 06 - RN ( ) - 4

3GE2 66 0 EJ - 08 - RN ( ) - 4

Ⓐ Model No. | Ⓑ Solenoid position | Ⓒ Explosion-proof Series | Ⓓ Port size | Ⓔ Electrical connections | Ⓕ Option | Ⓖ Voltage

Code	Description	Ⓐ Model No. 3GE1	3GE2	4GE1	4GE2	4GE3	4GE4
Ⓑ Solenoid position							
1	2-position single			●	●	●	●
2	2-position double			●	●	●	●
3	3-position all ports closed			●	●	●	●
4	3-position ABR connection			●	●	●	●
5	3-position PAB connection			●	●	●	●
66	Two 3-port valves integrated *1 — A valve side: Normally closed / B valve side: Normally closed	●	●				
Ⓒ Explosion-proof Series							
EJ	Japan Explosion-Proof Certified Product	●	●	●	●	●	●
Ⓓ Port size {Ports 4(A), 2(B)}							
Port	Ports 4(A), 2(B)	Port P/R1/R2 (1) = M5 (2) = Rc1/8 (3) = Rc1/4 (4) = Rc3/8 (5) = Rc1/2					
06	Rc1/8	(2)		(2)			
08	Rc1/4		(3)		(3)	(3)	
10	Rc3/8					(4)	(4)
15	Rc1/2						(5)
00	Valve for base mounting	●	●	●	●	●	●
Ⓔ Electrical connections							***2**
RN	M8 connector without cable	●	●	●	●	●	●
R1	M8 connector straight cable	●	●	●	●	●	●
R2	M8 connector L-type cable	●	●	●	●	●	●
Ⓕ Option							
Blank	Non-locking/locking common manual override (standard)	●	●	●	●	●	●
H	With exhaust check valve *3	●	●	●	●	●	
A	Ozone/coolant proof	●	●	●	●	●	●
F	A/B port filter *4	●	●	●	●	●	●
Ⓖ Voltage							
4	12 VDC	●	●	●	●	●	●

⚠Precautions for model No. selection

*1: Dimensions are the same as the respective 2-position double solenoid.
*2: M8 connector length is 300 mm. Select other lengths from page 1764.
*3: 3-position all ports closed and PAB connection are not provided with the exhaust check valve (H).
*4: A filter is built into port P as standard.
*5: Explosion-proof barrier sold separately. Select from page 1768.

Internal structure diagram and parts list

3GE1660EJ

● Two 3-port valves integrated
M8 connector without cable (RN)

A side valve: Normally closed,
B side valve: Normally closed
NC/NC

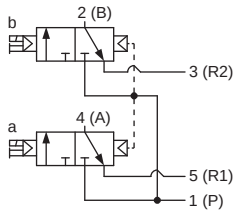

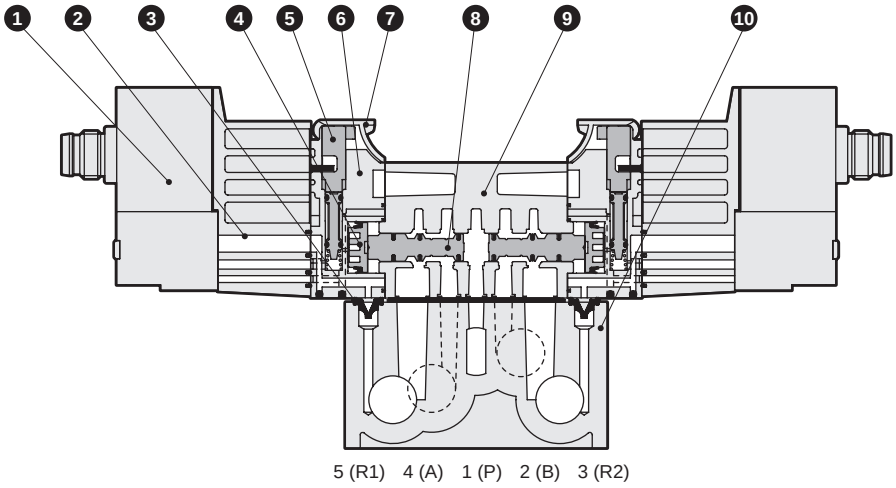

3GE2660EJ

● Two 3-port valves integrated
M8 connector without cable (RN)

A side valve: Normally closed,
B side valve: Normally closed
NC/NC

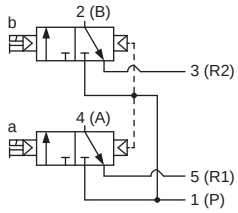

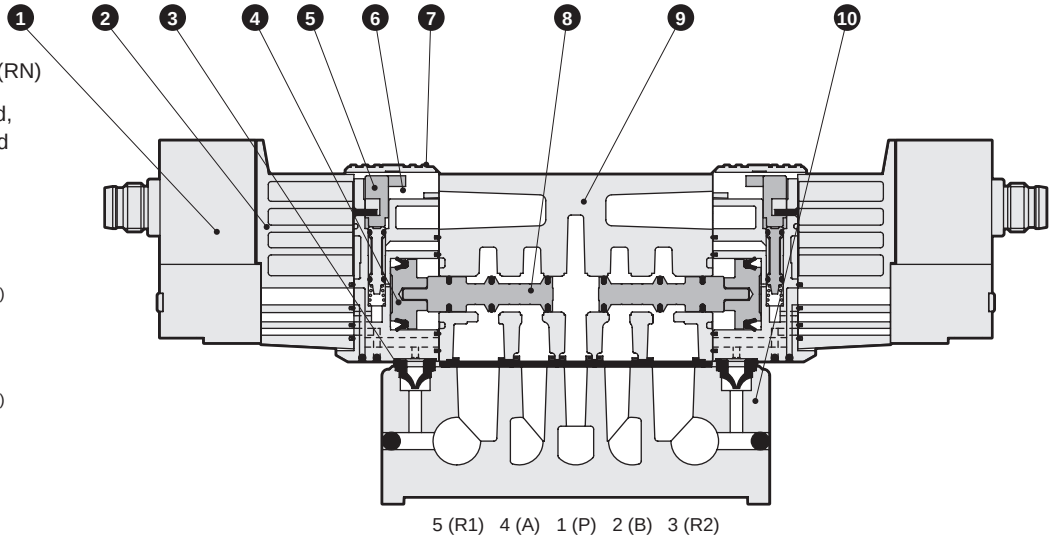

Main parts list

No.	Part name	Material	No.	Part name	Material
1	Coil assembly	–	6	Piston chamber	Resin
2	Adapter	Resin	7	Manual protection cover	Resin
3	Pilot exhaust check valve	Hydrogenated nitrile rubber	8	Spool assembly	–
4	Piston assembly	–	9	Body	Aluminum alloy die-casting
5	Manual override	Resin	10	Sub-plate	Aluminum alloy die-casting

Internal structure diagram and parts list

4GE110EJ

● 2-position single
M8 connector without cable (RN)

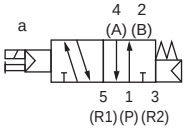

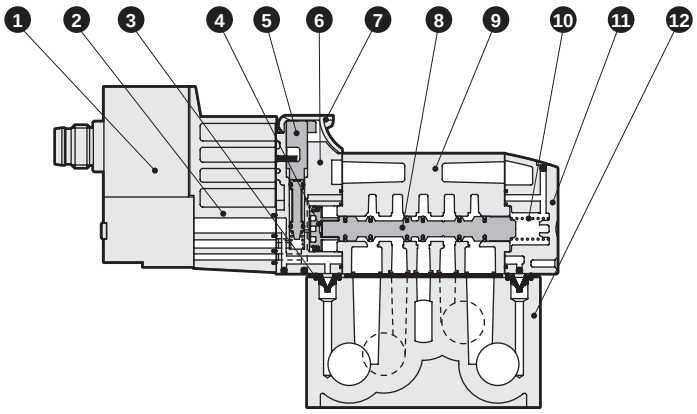

4GE120EJ

● 2-position double
M8 connector without cable (RN)

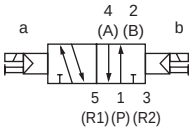

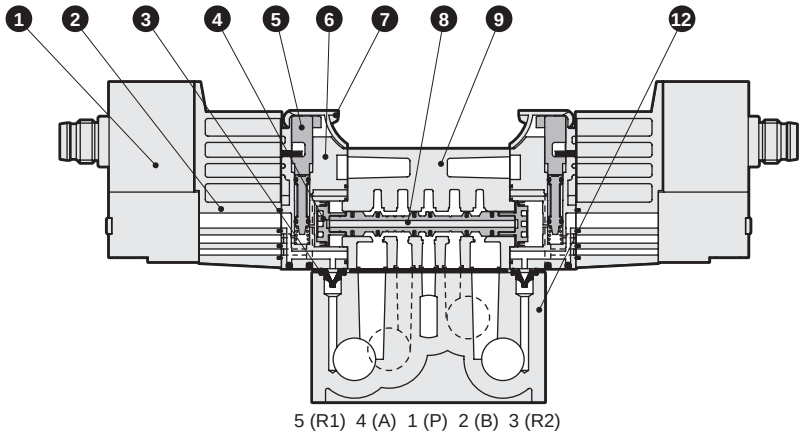

4GE1 $^{3}_{4}_{5}$ 0EJ

● 3-position
M8 connector without cable (RN)

All ports closed

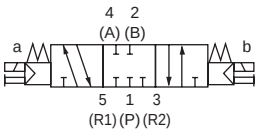

A/B/R connection

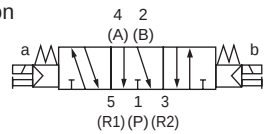

P/A/B connection

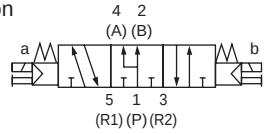

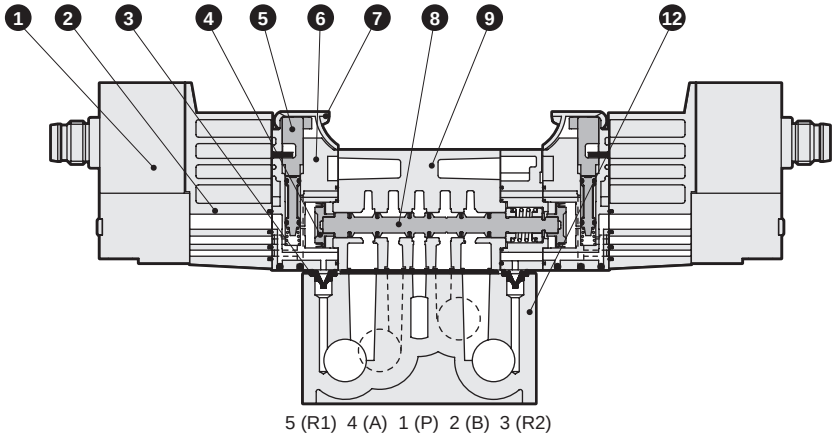

Main parts list

No.	Part name	Material	No.	Part name	Material
1	Coil assembly	–	7	Manual protection cover	Resin
2	Adapter	Resin	8	Spool assembly	–
3	Pilot exhaust check valve	Hydrogenated nitrile rubber	9	Body	Aluminum alloy die-casting
4	Piston D assembly	–	10	Spool spring	Stainless steel
5	Manual override	Resin	11	Cap	Resin
6	Piston chamber	Resin	12	Sub-plate	Aluminum alloy die-casting

Internal structure diagram and parts list

4GE210EJ/4GE310EJ

● 2-position single
M8 connector without cable (RN)

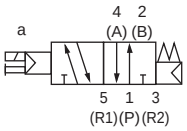

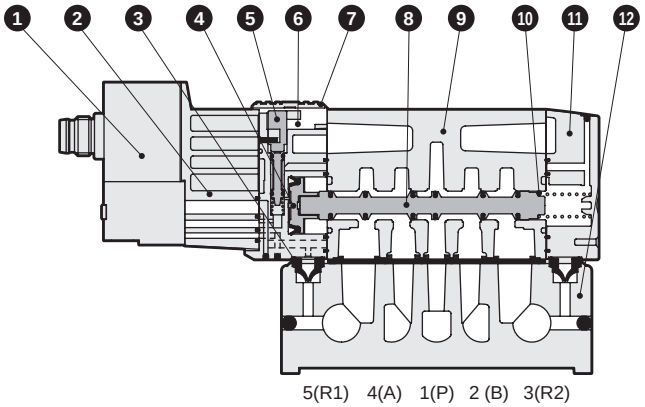

4GE220EJ/4GE320EJ

● 2-position double
M8 connector without cable (RN)

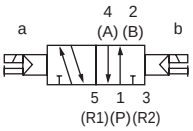

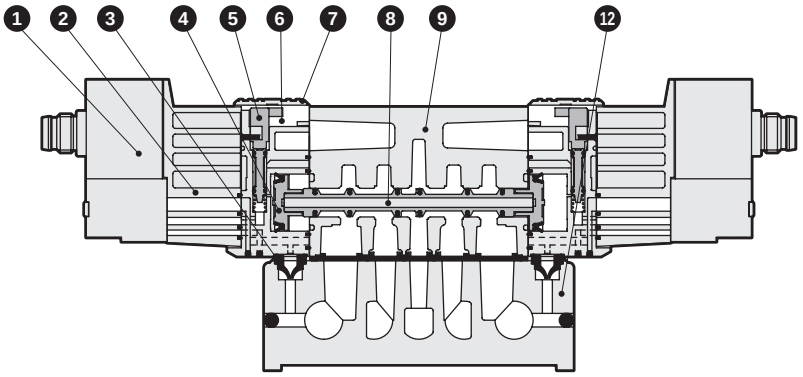

4GE2 $^{3}_{4}_{5}$ 0EJ/4GE3 $^{3}_{4}_{5}$ 0EJ

● 3-position
M8 connector without cable (RN)

All ports closed

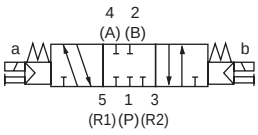

A/B/R connection

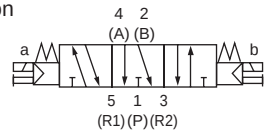

P/A/B connection

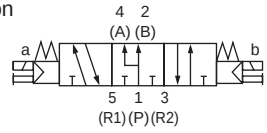

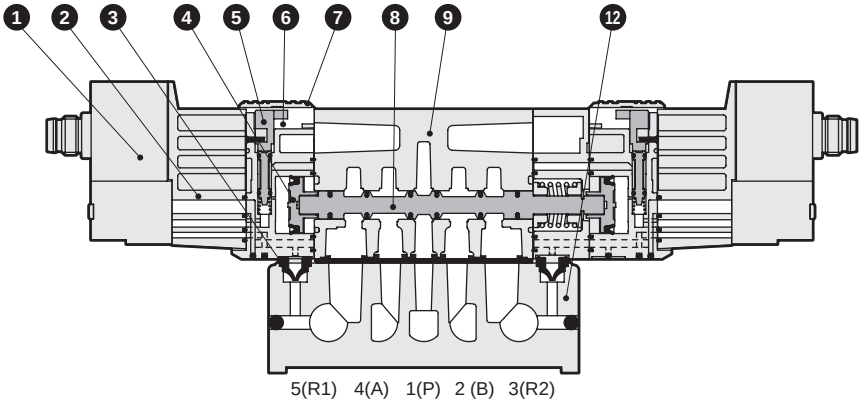

Main parts list

No.	Part name	Material	No.	Part name	Material
1	Coil assembly	–	7	Manual protection cover	Resin
2	Adapter	Resin	8	Spool assembly	–
3	Pilot exhaust check valve	Hydrogenated nitrile rubber	9	Body	Aluminum alloy die-casting
4	Piston D assembly	–	10	Spool spring	Stainless steel
5	Manual override	Resin	11	Cap	Resin
6	Piston chamber	Resin	12	Sub-plate	Aluminum alloy die-casting

Internal structure diagram and parts list

4GE410EJ

● 2-position single
M8 connector without cable (RN)

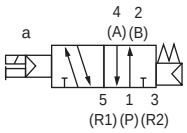

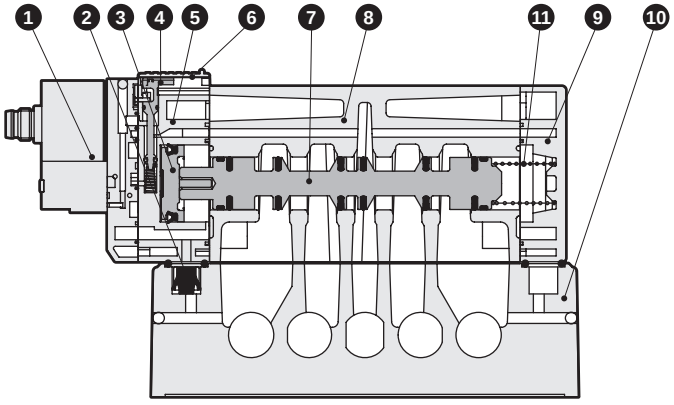

5 (R1) 4 (A) 1 (P) 2 (B) 3 (R2)

4GE420EJ

● 2-position double
M8 connector without cable (RN)

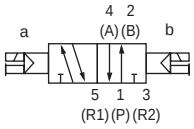

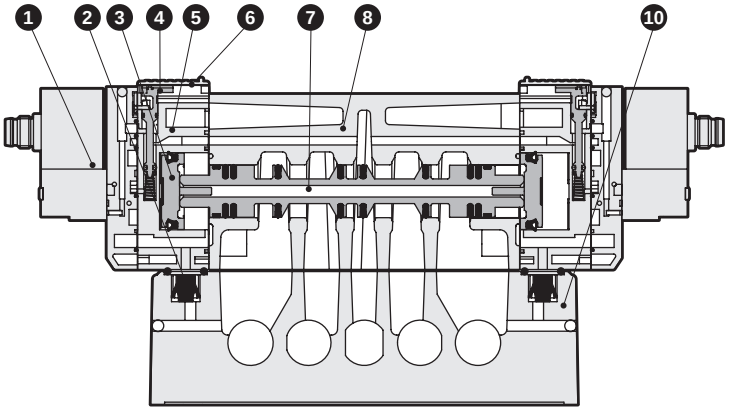

5 (R1) 4 (A) 1 (P) 2 (B) 3 (R2)

4GE4 $^{3}_{4}_{5}$ 0EJ

● 3-position
M8 connector without cable (RN)

All ports closed

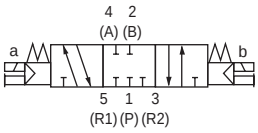

A/B/R connection

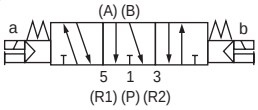

P/A/B connection

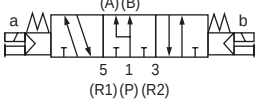

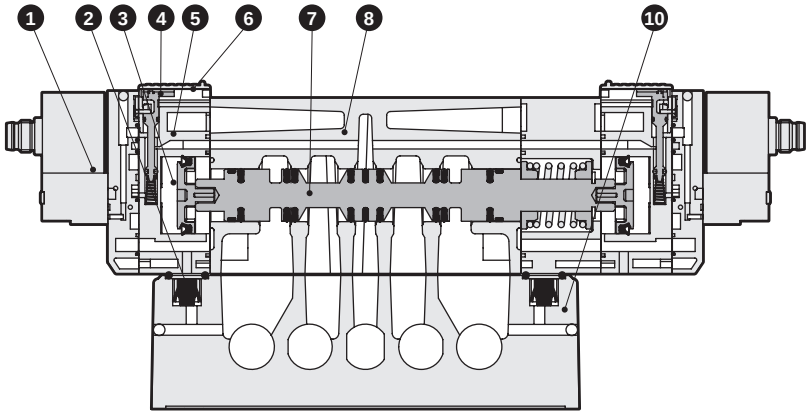

5 (R1) 4 (A) 1 (P) 2 (B) 3 (R2)

Main parts list

No.	Part name	Material	No.	Part name	Material
1	Coil assembly	-	6	Manual protection cover	Resin
2	Check valve	Hydrogenated nitrile rubber	7	Spool assembly	-
3	Piston assembly	-	8	Body	Aluminum alloy die-casting
4	Manual override	Resin	9	Cap	Resin
5	Piston chamber	Resin	10	Discrete sub-plate	Aluminum alloy die-casting
			11	Spool spring	Stainless steel

Dimensions

4GE110EJ

● 2-position single without connector (RN)

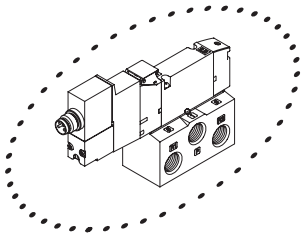

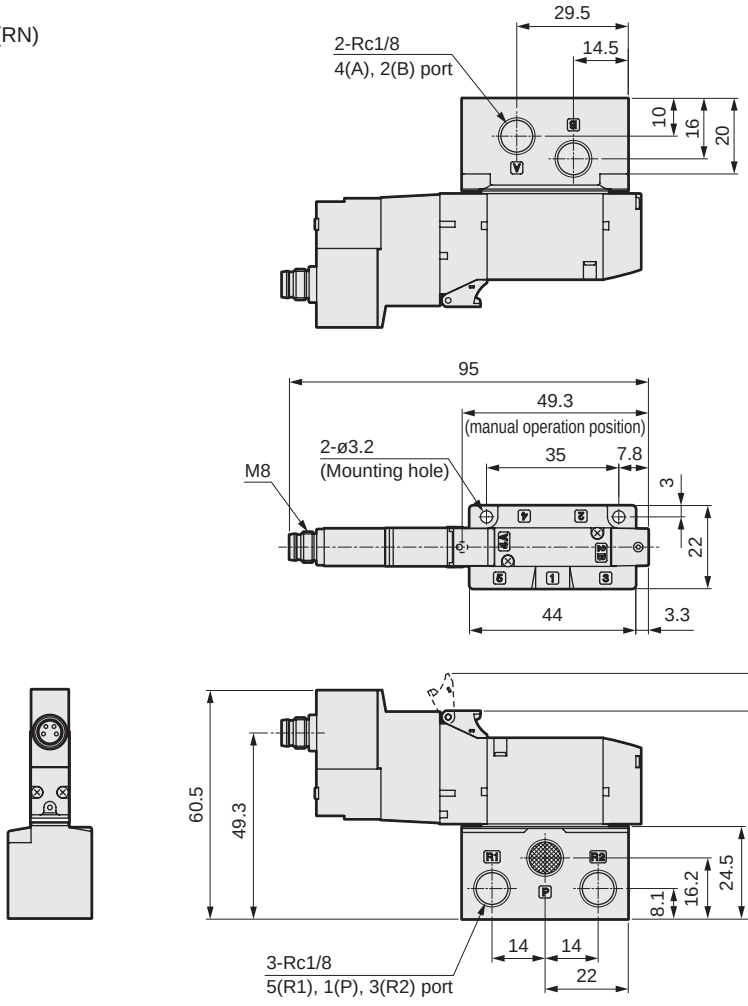

● M8 connector/straight cable (R1)

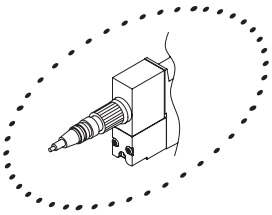

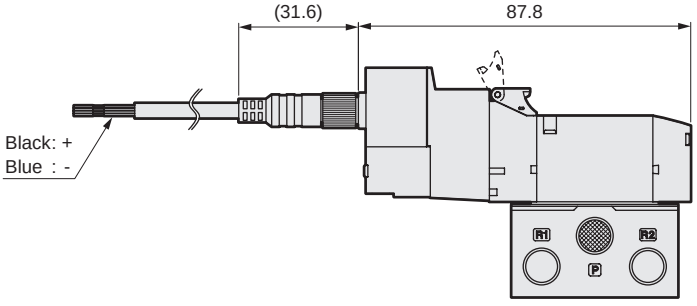

● M8 connector/L-type cable (R2)

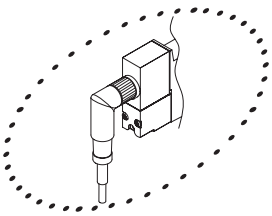

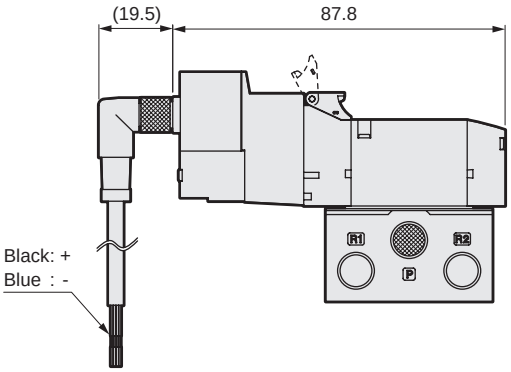

Dimensions

4GE120EJ

● 2-position double without connector (RN)

3GE1660EJ

● Two 3-port valves integrated without connector (RN)

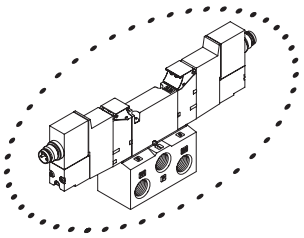

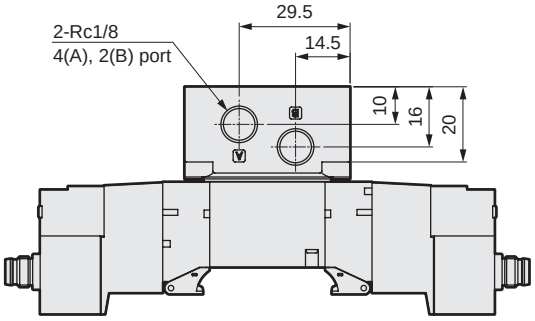

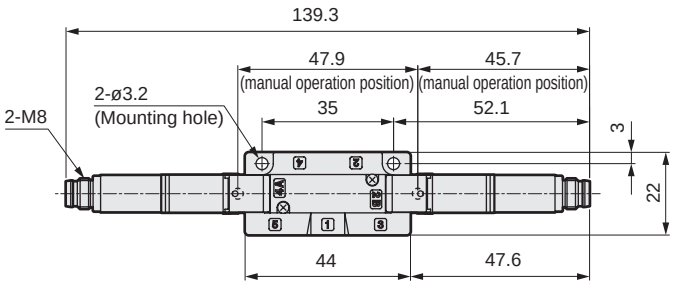

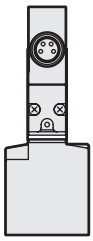

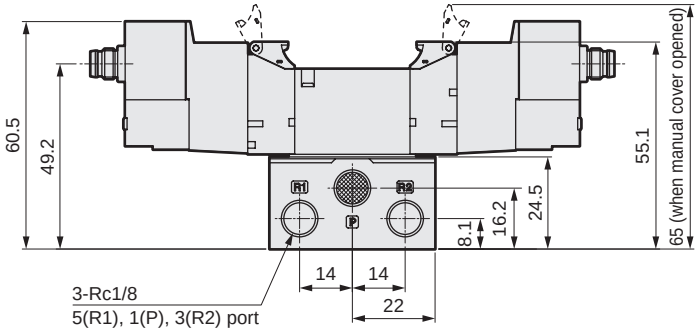

● M8 connector/straight cable (R1)

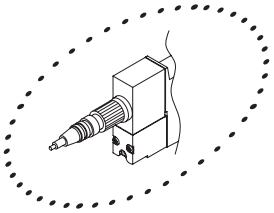

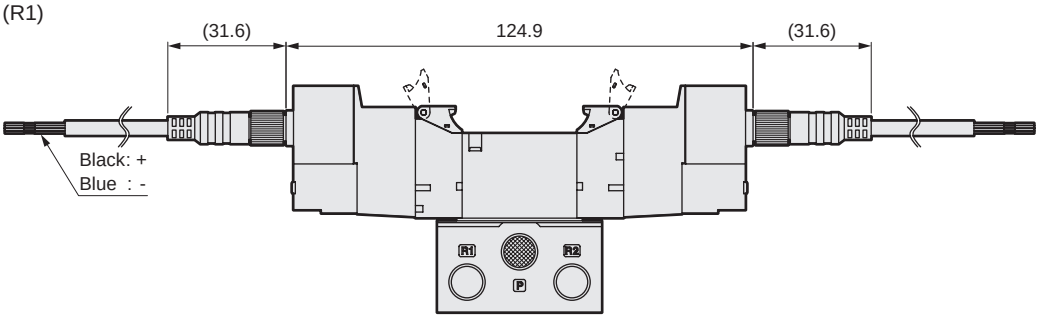

● M8 connector/L-type cable (R2)

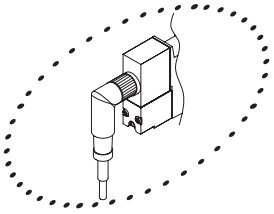

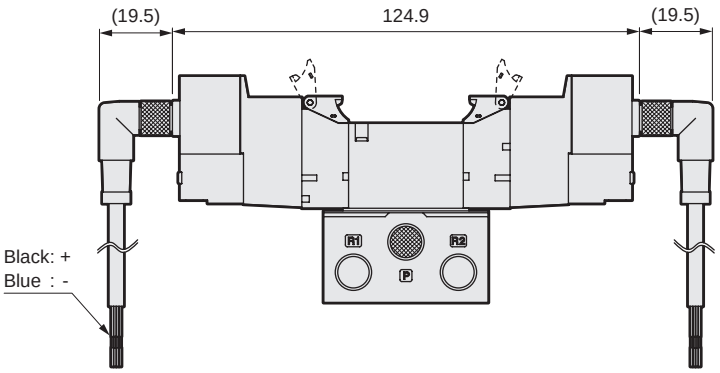

Dimensions

4GE1 $^{3}_{4}_{5}$ 0EJ

● 3-position without connector (RN)

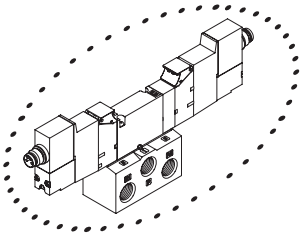

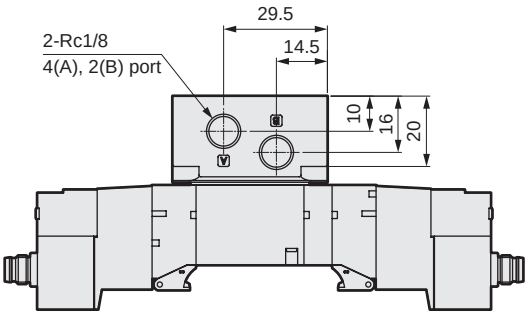

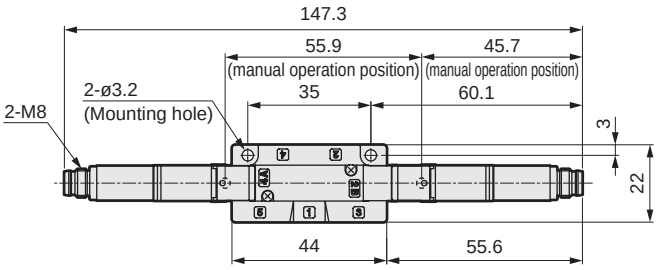

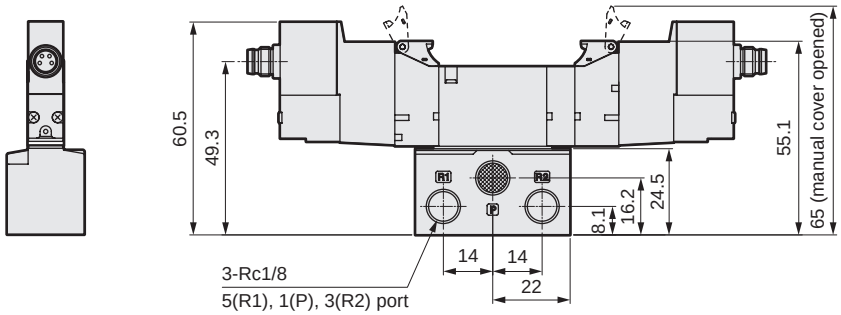

● M8 connector/straight cable (R1)

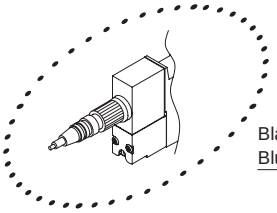

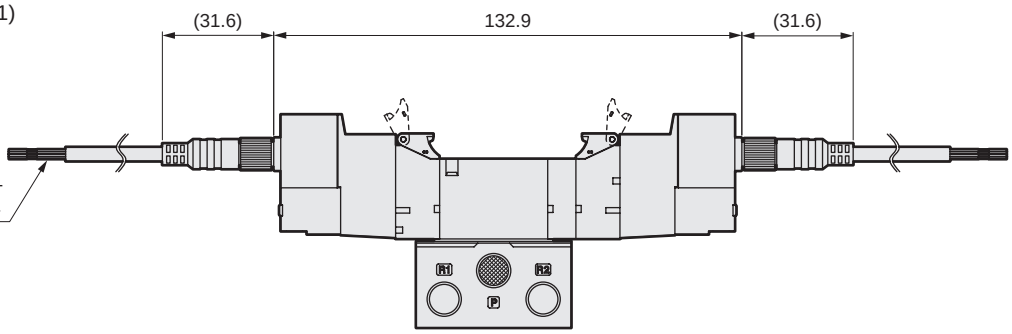

● M8 connector/L-type cable (R2)

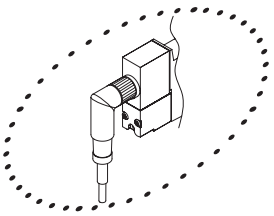

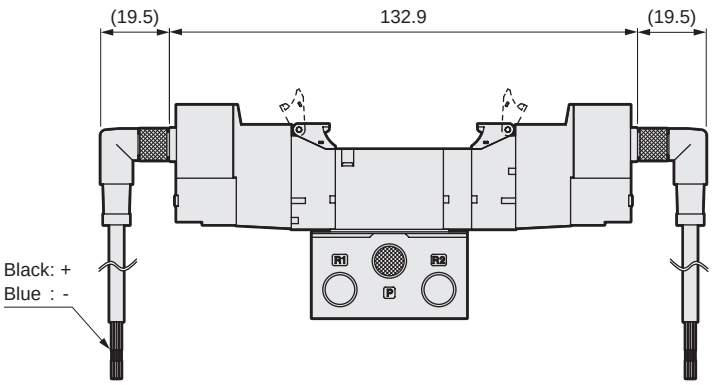

Dimensions

4GE210EJ

● 2-position single without connector (RN)

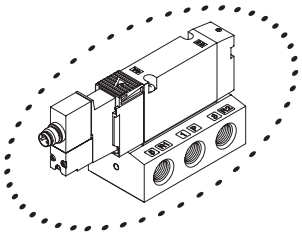

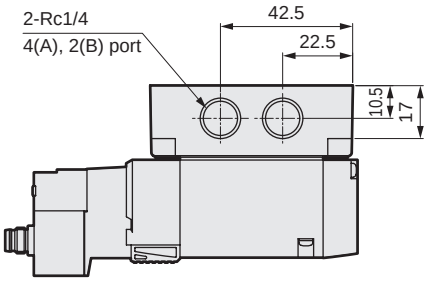

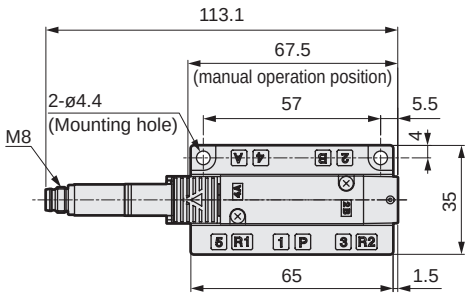

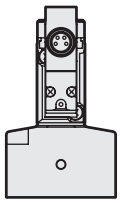

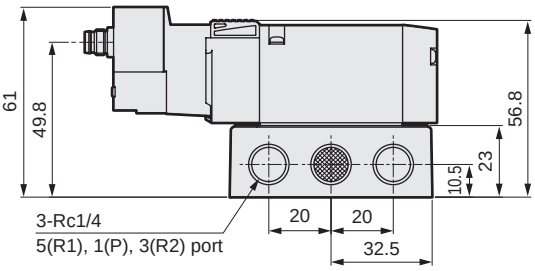

● M8 connector/straight cable (R1)

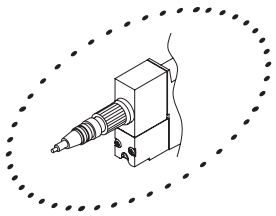

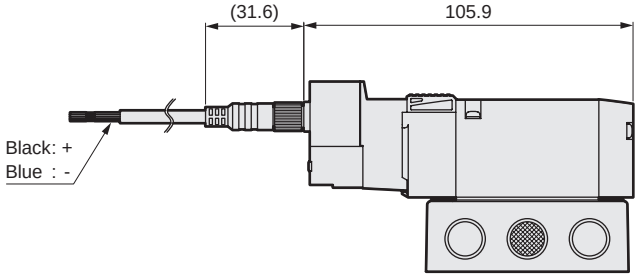

● M8 connector/L-type cable (R2)

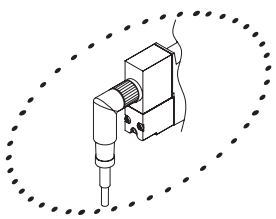

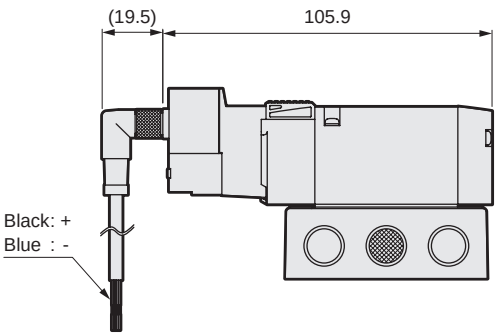

Dimensions

4GE220EJ

● 2-position double without connector (RN)

3GE2660EJ

● Two 3-port valves integrated without connector (RN)

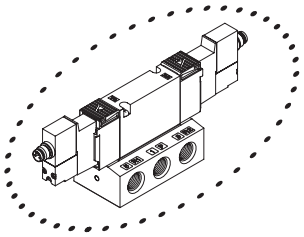

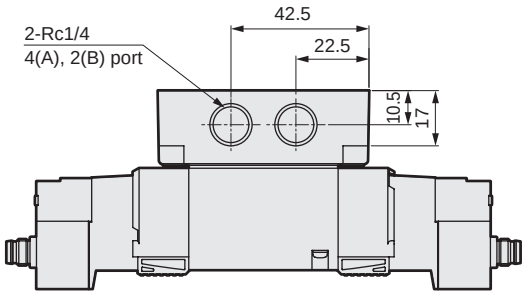

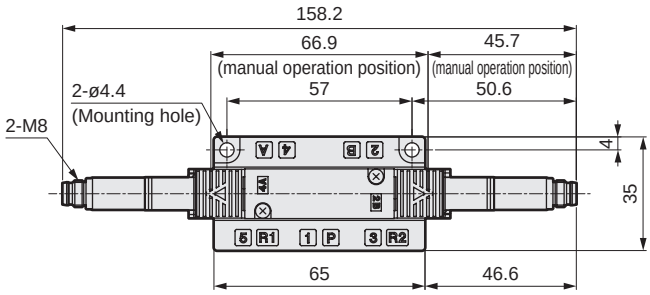

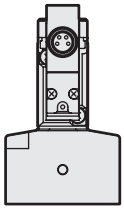

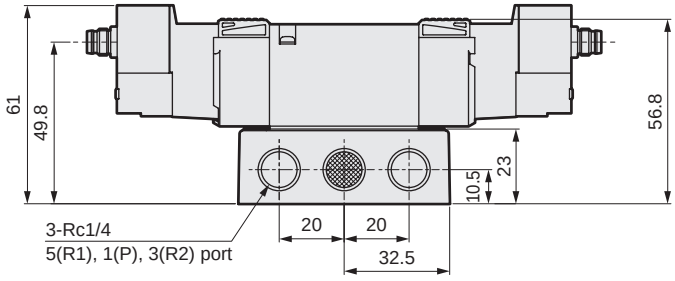

● M8 connector/straight cable (R1)

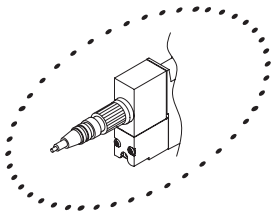

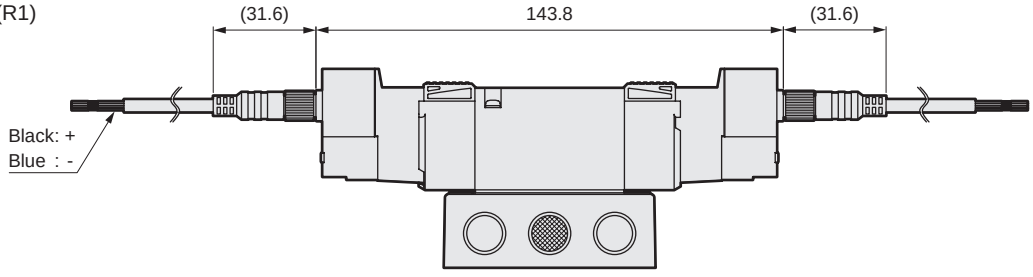

● M8 connector/L-type cable (R2)

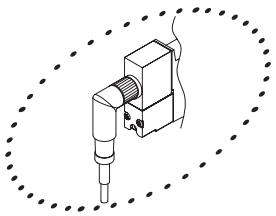

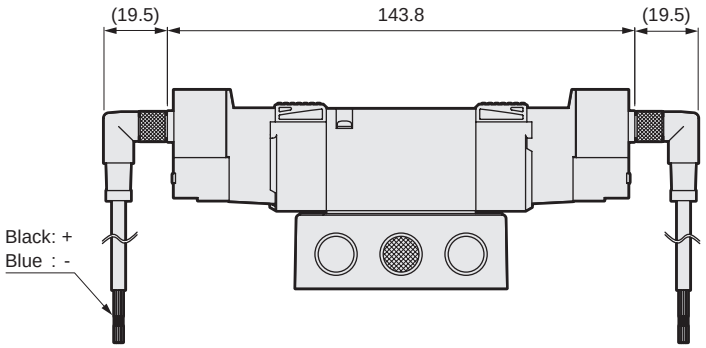

Dimensions

4GE2 $^{3}_{4}_{5}$ 0EJ

● 3-position without connector (RN)

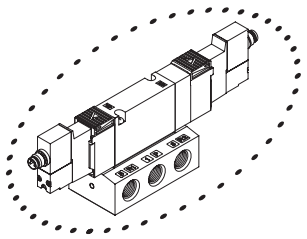

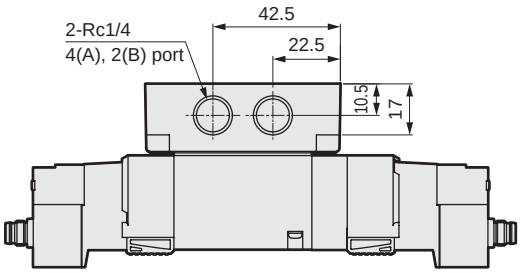

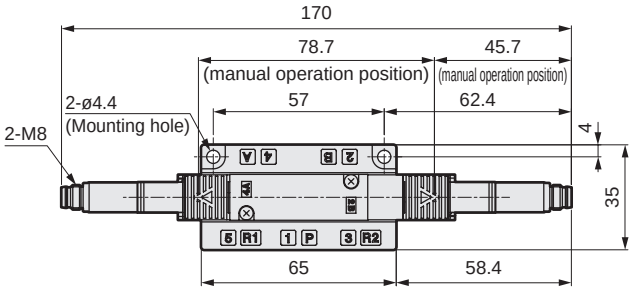

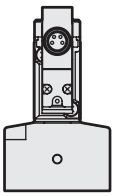

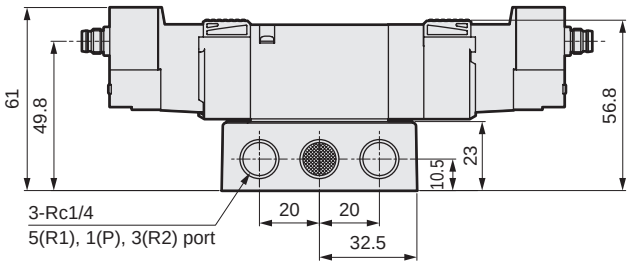

● M8 connector/straight cable (R1)

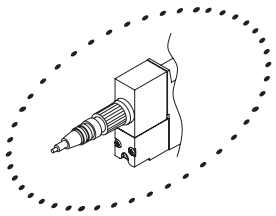

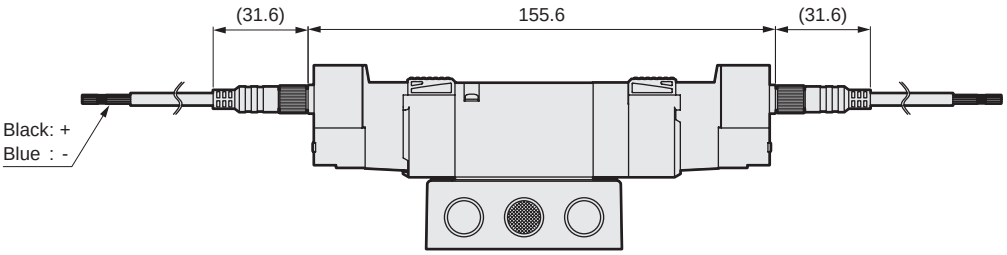

● M8 connector/L-type cable (R2)

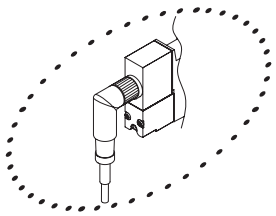

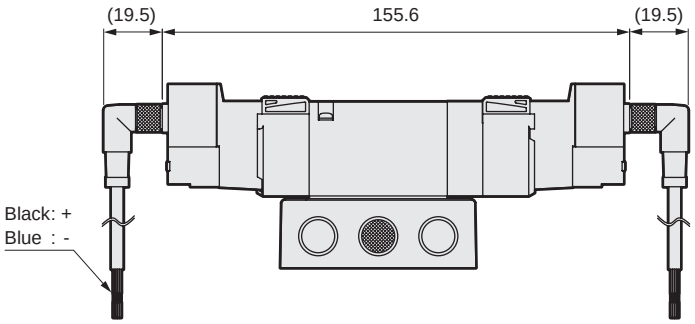

Dimensions

4GE310EJ

● 2-position single without connector (RN)

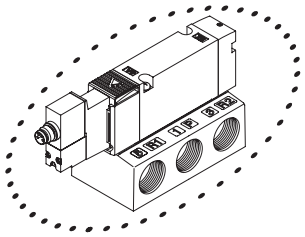

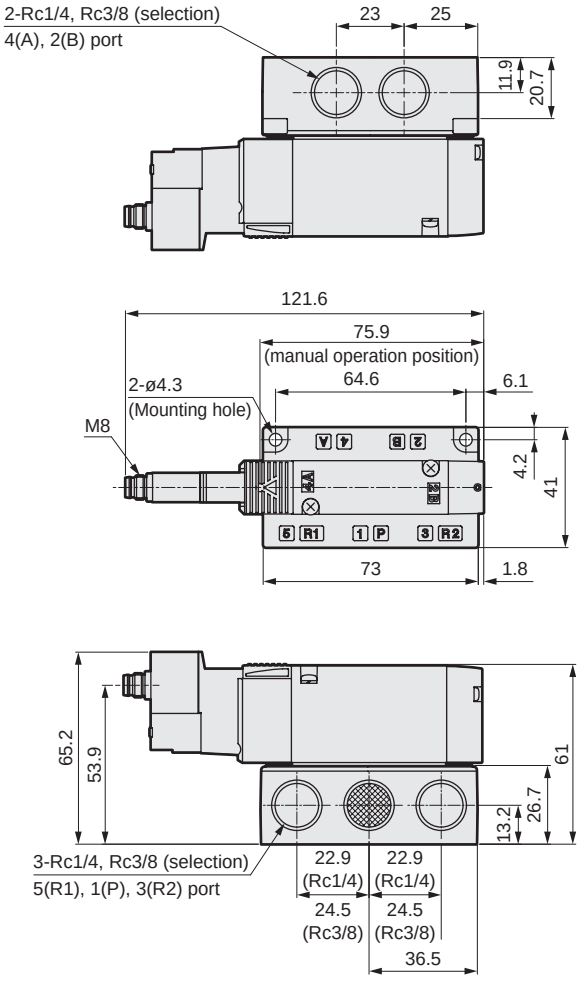

● M8 connector/straight cable (R1)

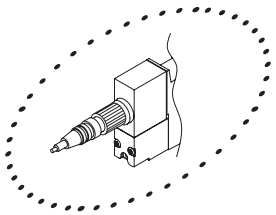

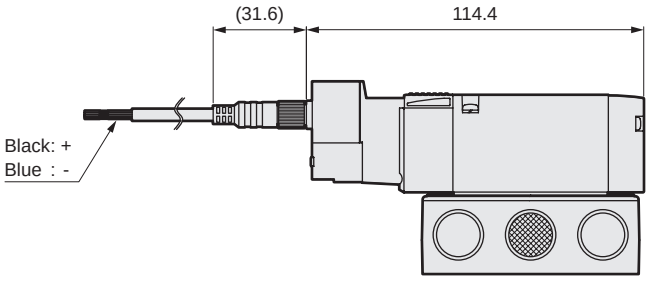

● M8 connector/L-type cable (R2)

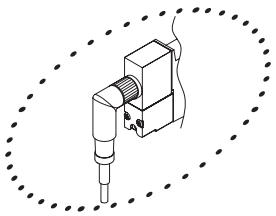

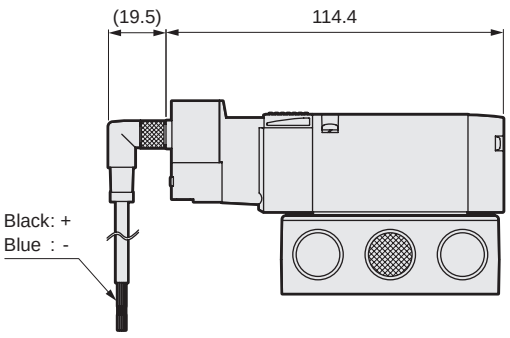

Dimensions

4GE320EJ

● 2-position double without connector (RN)

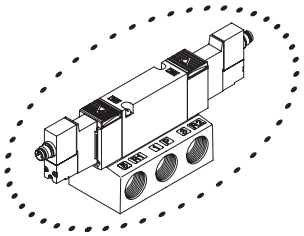

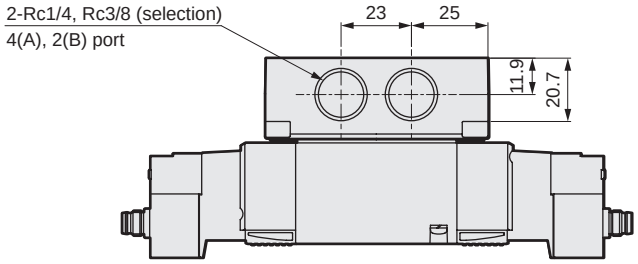

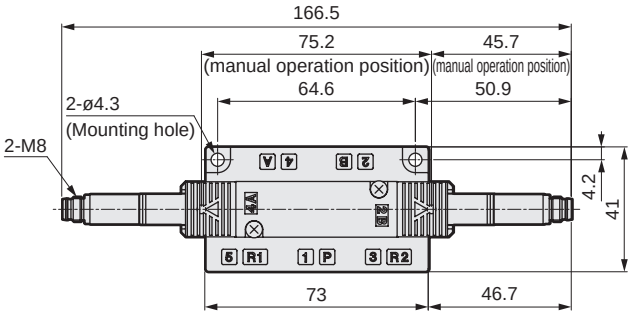

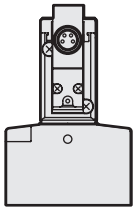

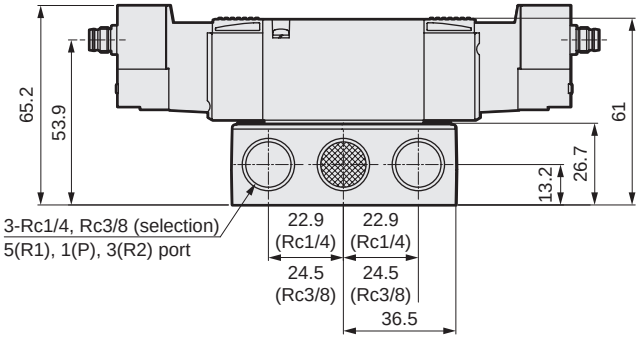

● M8 connector/straight cable (R1)

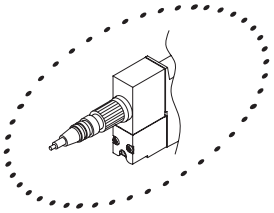

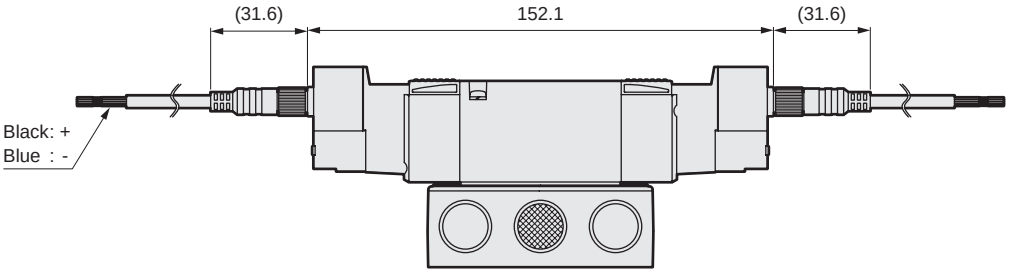

● M8 connector/L-type cable (R2)

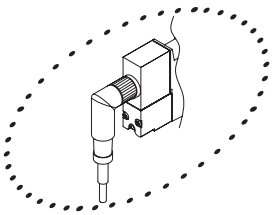

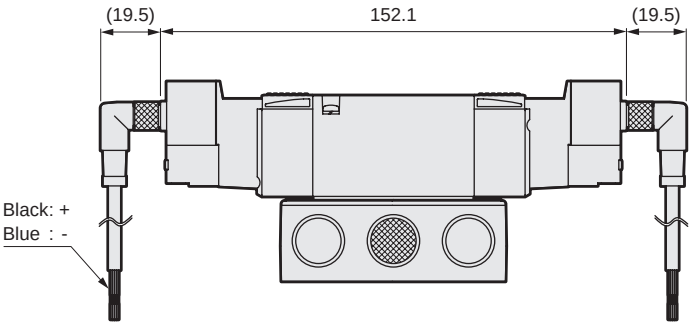

Dimensions

4GE3 $^{3}_{4}_{5}$ 0EJ

● 3-position without connector (RN)

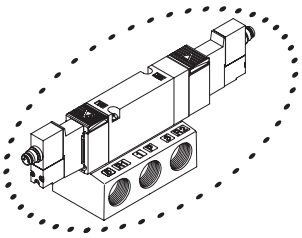

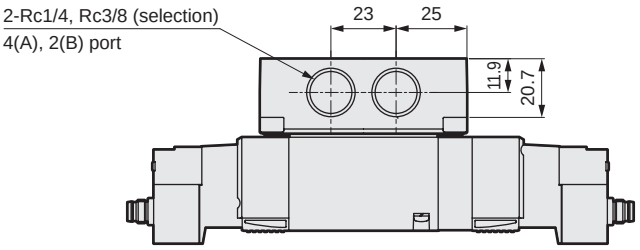

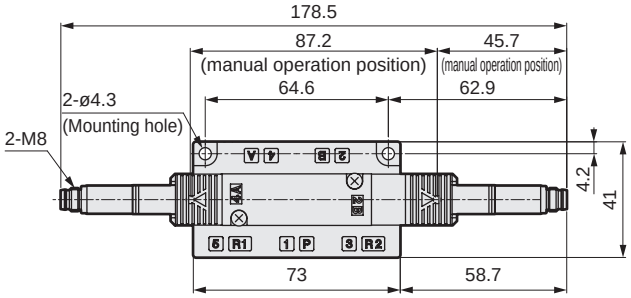

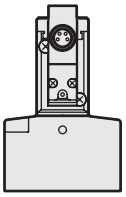

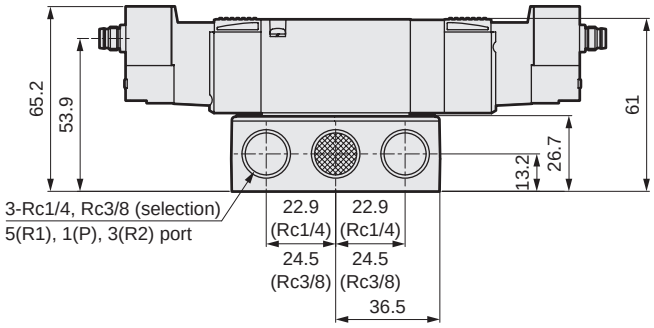

● M8 connector/straight cable (R1)

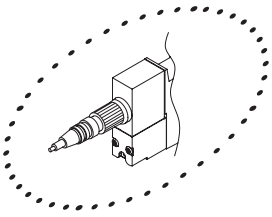

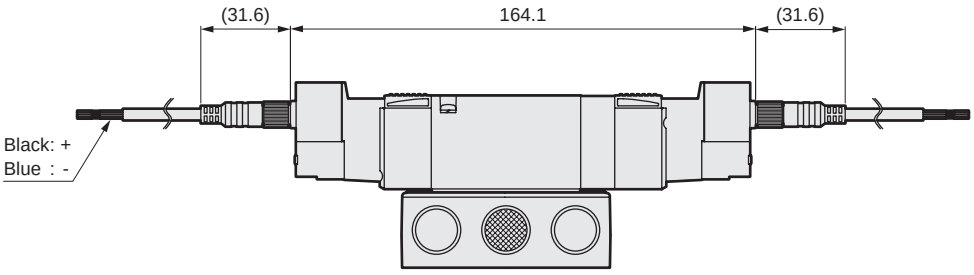

● M8 connector/L-type cable (R2)

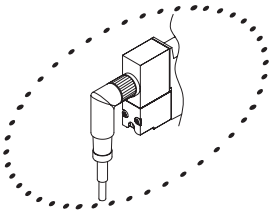

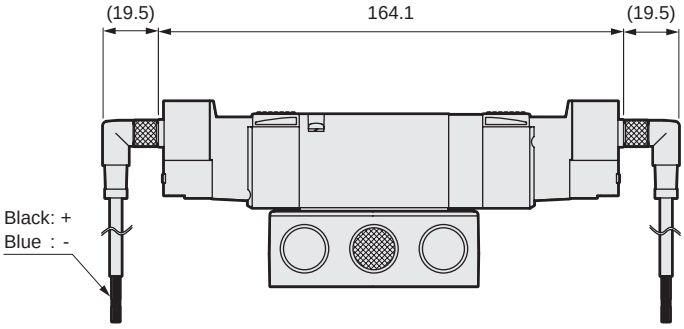

Dimensions

4GE410EJ

● 2-position single without connector (RN)

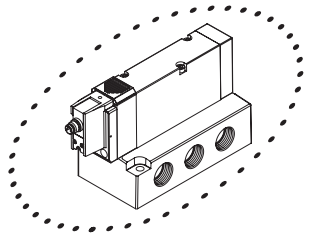

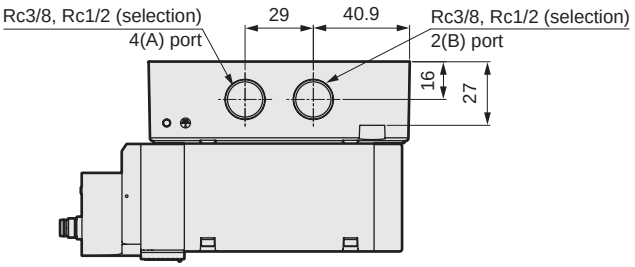

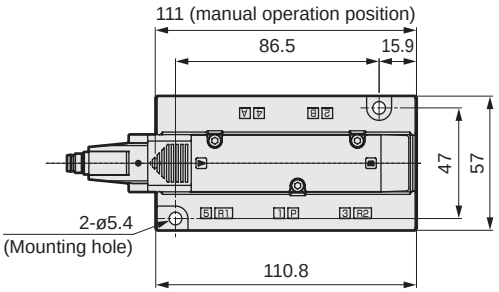

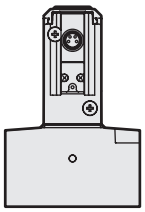

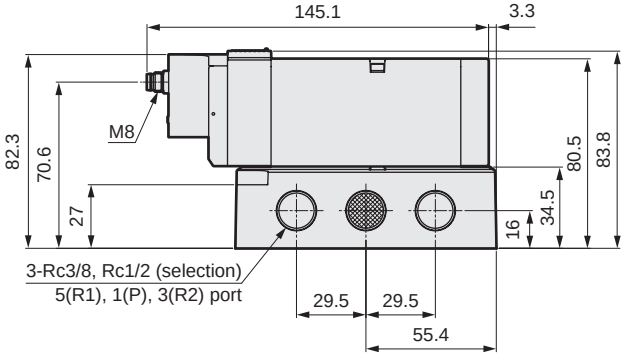

● M8 connector/straight cable (R1)

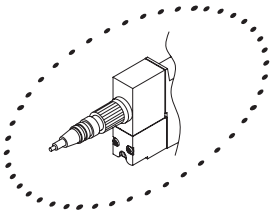

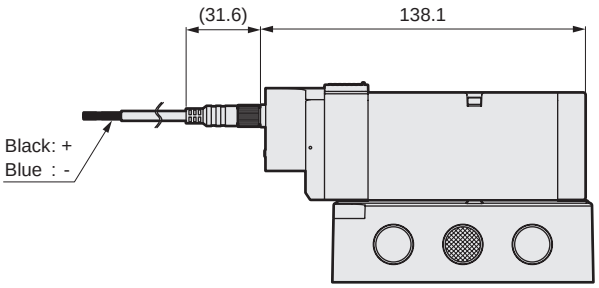

● M8 connector/L-type cable (R2)

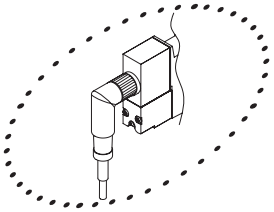

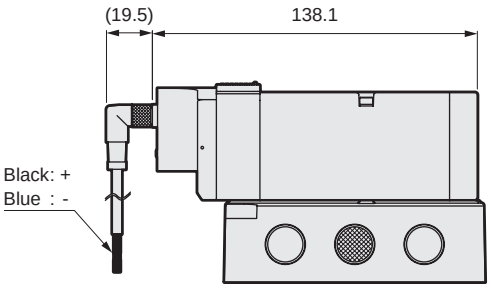

Dimensions

4GE420EJ

● 2-position double without connector (RN)

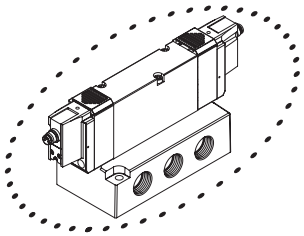

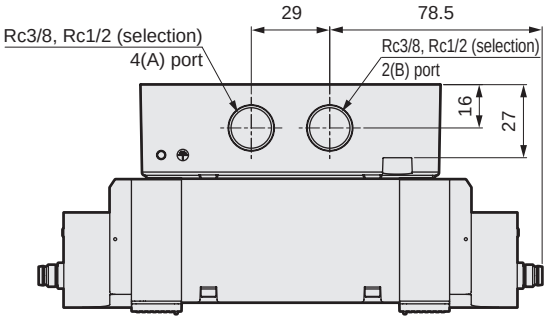

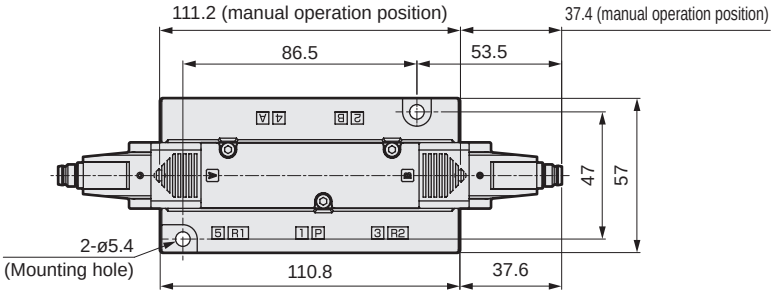

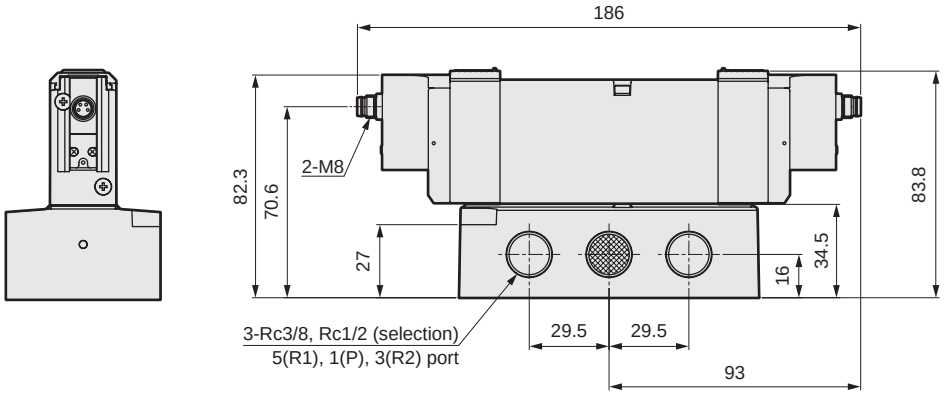

● M8 connector/straight cable (R1)

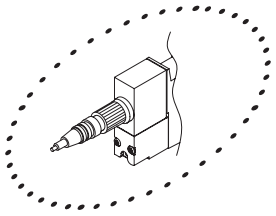

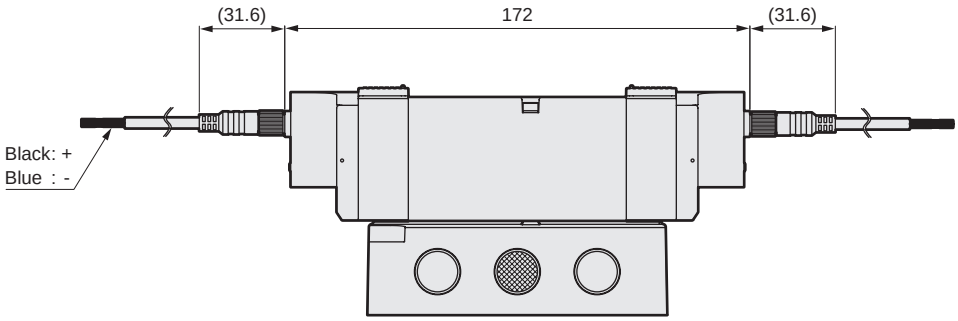

● M8 connector/L-type cable (R2)

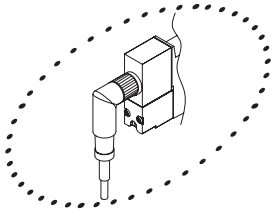

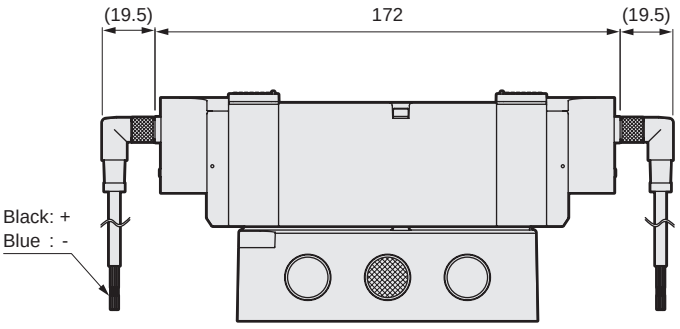

Dimensions

4GE4 $^{3}_{4}_{5}$ 0EJ

● 3-position without connector (RN)

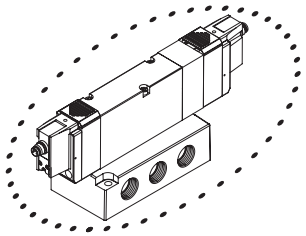

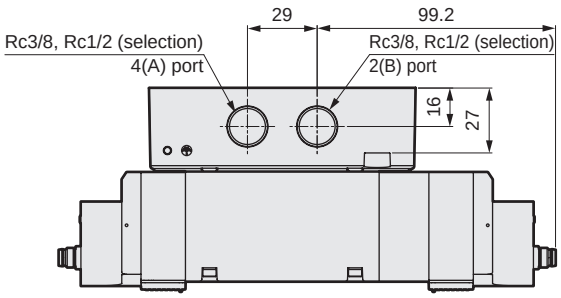

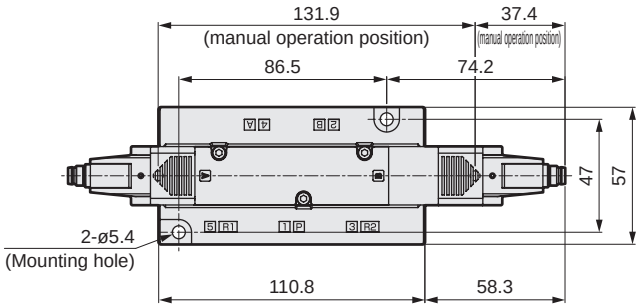

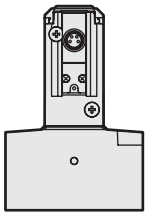

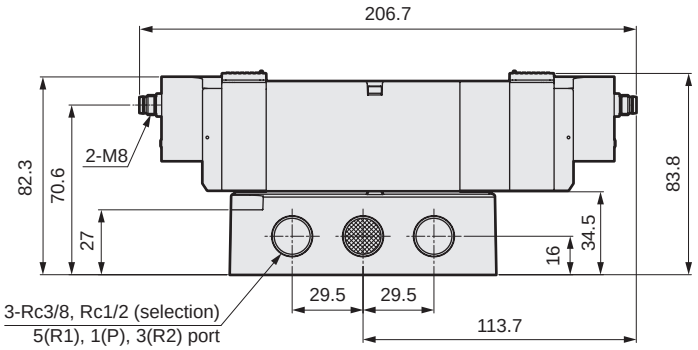

● M8 connector/straight cable (R1)

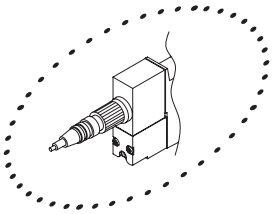

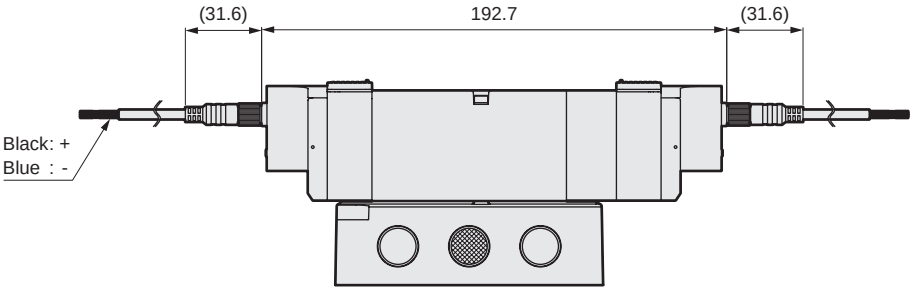

● M8 connector/L-type cable (R2)

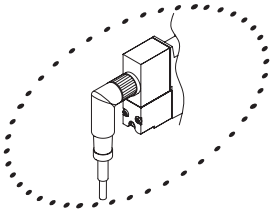

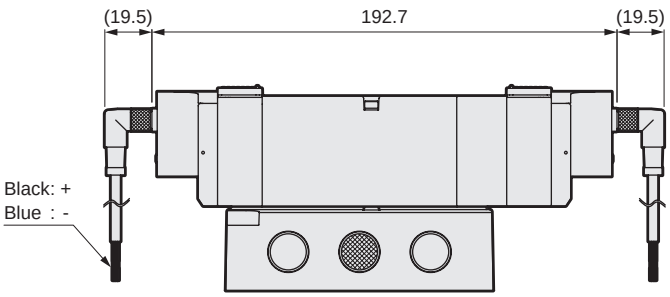

MEMO

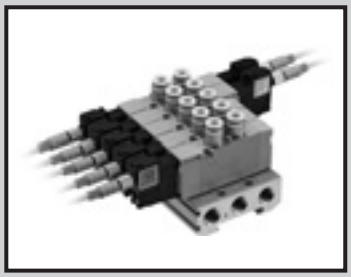

Individual wiring manifold
Body piping
Direct mount/DIN rail mount

M3GD1/2EJ-(D) / M4GD1/2/3/4EJ-(D) Series

● Applicable cylinder bore size: ø20 to ø140

CE RoHS

JIS symbol

● Two 3-port valves integrated
(A side valve: NC, B side valve: NC)

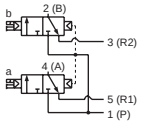

● 5-port valve

2-position single

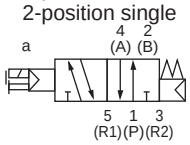

2-position double

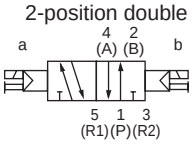

3-position
All ports closed

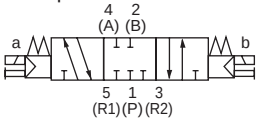

3-position A/B/R connection

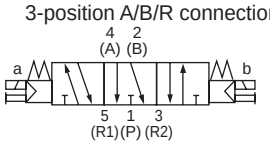

3-position P/A/B connection

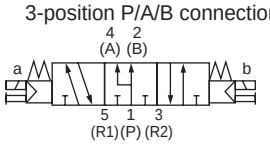

Manifold common specifications

1 MPa ≈ 145.0 psi, 1 MPa = 10 bar

Item		Description
Manifold		Integrated base
Mounting method		Direct mount/DIN rail mount
Air supply and exhaust method		Common supply/common exhaust (With internal exhaust check valve)
Pilot exhaust method	Internal pilot	Main valve/pilot valve common exhaust (Standard) (Pilot exhaust check valve built-in)
Piping direction		Valve top direction
Valve and operation		Pilot operated soft spool valve
Working fluid		Compressed air
Max. working pressure MPa		0.7 (≈101 psi, 7 bar)
Min. working pressure MPa		0.2 (≈29 psi, 2 bar)
Proof pressure MPa		1.05 (≈152 psi, 10 bar)
Ambient temperature °C		-5 (23°F) to 55 (131°F) (no freezing)
Fluid temperature °C		5 (41°F) to 55 (131°F)
Manual override		Non-locking/locking common
Lubrication *1		Not required
Degree of protection *2		IP67
Vibration resistance m/s^2		50 or less
Shock resistance m/s^2		300 or less
Atmosphere		Cannot be used in corrosive gas environments

Solenoid specifications

Item	Description
Rated voltage V	12 DC
Voltage fluctuation range	+10% -20%
Rated current A	0.05
Power consumption W	0.6
Thermal class	B

*1: Use turbine oil Class 1 ISO VG32 for lubrication. Excessive or intermittent lubrication results in unstable operation.
*2: Tested according to the test method for IP67 (IEC60529) standards. Note that while the unit is protected from dust and water, it cannot be used immersed in water. Countermeasures such as covering the unit should also be taken if using in environments where it will be constantly exposed to dust or water.

Intrinsic safety explosion-proof specifications

Item	Description
Types of explosion-proof structures	Intrinsic safety explosion-proof structure (ib)
Target gas or above listed ignitability and flame-proof grade	Ex ib IIC T4 Gb
Barrier input voltage	24 VDC
Intrinsic safety circuit allowable voltage Ui	30 VDC
Intrinsic safety circuit allowable current Ii	200 mA
Intrinsic safety circuit allowable power Pi	0.68 W
Internal inductance Li	Value that can be ignored
Internal capacitance Ci	Value that can be ignored

Individual specifications

Port size	M3GD1/M4GD1		M3GD2/M4GD2		M4GD3		M4GD4
	Direct mount	DIN rail mount	Direct mount	DIN rail mount	Direct mount	DIN rail mount	Direct mount
Max. station No.	20 stations	16 stations	20 stations	16 stations	20 stations	16 stations	15 stations
2, 4-port (port A/B)	Push-in fitting ø1.8, ø4, ø6 M5		Push-in fitting ø4, ø6, ø8 Rc1/8		Push-in fitting ø6, ø8, ø10 Rc1/4		Push-in fitting ø8, ø10, ø12 Rc3/8
1, 3, 5-port (port P/R1/R2)	Rc1/8		Rc1/4		Rc3/8		Rc1/2
Manifold base Weight calculation formula (n: station No.) g	23n + 52	25n + 60	47n + 64	49n + 92	74n + 88	76n + 117	150n + 199

Refer to "Cautions for mounting the DIN rail" (page 1775) before selection.
For 10 or over manifold station No. (5 stations for 4G3 and 4G4), use ports on both side for air supply and exhaust.
The manifold base weight is the value for screw specifications.
M4GD4 is only compatible with direct mounting.

Flow characteristics

Model No.	Solenoid position		P→A/B		A/B→R1/R2			
			C[dm³/(s·bar)]	b	C[dm³/(s·bar)]		b	
M3GD1 M4GD1	Two 3-port valves integrated		0.86	0.31	1.1	(0.66)	0.19	(0.22)
	2-position		0.99	0.20	1.2	(0.70)	0.20	(0.12)
	3-position	All ports closed	0.94	0.23	1.1	—	0.20	—
		ABR connection	0.93	0.18	1.3	(0.70)	0.23	(0.02)
		PAB connection	1.1	0.28	1.1	—	0.23	—
M3GD2 M4GD2	Two 3-port valves integrated		1.7	0.40	2.3	(1.7)	0.29	(0.32)
	2-position		2.3	0.36	2.9	(1.7)	0.24	(0.33)
	3-position	All ports closed	2.1	0.35	2.5	—	0.32	—
		ABR connection	2.2	0.37	2.9	(1.8)	0.32	(0.29)
		PAB connection	2.4	0.34	2.5	—	0.33	—
M4GD3	2-position		3.2	0.37	3.8	(2.5)	0.13	(0.28)
	3-position	All ports closed	2.9	0.35	3.3	—	0.35	—
		ABR connection	3.0	0.34	3.8	(2.6)	0.12	(0.27)
		PAB connection	3.3	0.30	3.3	—	0.32	—
M4GD4	2-position		7.3	0.12	9.0	—	0.17	—
	3-position	All ports closed	6.4	0.15	8.2	—	0.22	—
		ABR connection	6.3	0.33	8.9	—	0.26	—
		PAB connection	8.0	0.08	8.3	—	0.22	—

*1: Effective cross-sectional area S and sonic conductance C use the conversion formula S ≈ 5.0 × C.
*2: Values in ( ) are with the exhaust check valve.

M3GD1/2*EJ / M4GD1/2/3/4*EJ Series

Individual wiring manifold; body piping

How to order

Manifold model No.

M 4GD1 1 0 EJ - C4 - RN H ( ) - 6 - 4

3-port manifold model No.

M 3GD1 66 0 EJ - M5 - RN H ( ) - 2 - 4

Discrete valve for integrated base

4GD1 1 9 EJ - C6 - RN H —— 4

3-port discrete valve for integrated base

3GD1 66 9 EJ - 00 - RN H —— 4

Ⓐ Model No.

Ⓑ Solenoid position

Ⓒ Explosion-proof Series

Ⓓ Port size

Ⓔ Electrical connections

Ⓕ Option

Ⓖ Mount type

Ⓗ Station No.

Ⓘ Voltage

Code	Description	Ⓐ Model No. 3GD1	3GD2	4GD1	4GD2	4GD3	4GD4
Ⓑ Solenoid position							
1	2 position single			●	●	●	●
2	2-position double			●	●	●	●
3	3-position all ports closed			●	●	●	●
4	3-position ABR connection			●	●	●	●
5	3-position PAB connection			●	●	●	●
66	3-port valve Two valves integrated *1, 2 — A valve side: Normally closed / B valve side: Normally closed	●	●				
8	Mix manifold (when there are multiple solenoid positions)	●	●	●	●	●	●
Ⓒ Explosion-proof Series							
EJ	Japan Explosion-Proof Inspected Product	●	●	●	●	●	●
Ⓓ Port size [2(B), 4(A) port]							
Port	4(A)/2(B) port	Port P/R1/R2 (1/8) = Rc1/8 (1/4) = Rc1/4 (3/8) = Rc3/8 (5)=Rc1/2					
C18	ø1.8 push-in fitting	(2)		(2)			
C4	ø4 push-in fitting	(2)	(3)	(2)	(3)		
C6	ø6 push-in fitting	(2)	(3)	(2)	(3)	(4)	
C8	ø8 push-in fitting		(3)		(3)	(4)	(5)
C10	ø10 push-in fitting					(4)	(5)
C12	ø12 push-in fitting						(5)
CX	Push-in fitting mix *3	(2)	(3)	(2)	(3)	(4)	(5)
M5	M5	(2)		(2)			
06	Rc1/8		(3)		(3)		
08	Rc1/4					(4)	
10	Rc3/8						(5)
00	Valve for base mounting	●	●	●	●	●	●
Ⓔ Electrical connections							
RN	M8 connector without cable	●	●	●	●	●	●
R1	M8 connector Straight cable *4	●	●	●	●	●	●
R2	M8 connector L-type cable *4	●	●	●	●	●	●
Ⓕ Option							
Blank	Manual override of non-locking/locking common (standard)	●	●	●	●	●	●
H	With exhaust check valve *5, 7	●	●	●	●	●	
A	Ozone/coolant proof	●	●	●	●	●	●
F	Port A/B filter *6	●	●	●	●	●	●
Z1	Air supply spacer *7, 8	●	●	●	●	●	
Z2	In-stop valve spacer *7, 8	●	●	●	●	●	
Z3	Exhaust spacer *7, 8	●	●	●	●	●	
Ⓖ Mount type							
Blank	Direct mount	●	●	●	●	●	●
D	DIN rail mount *9	●	●	●	●	●	
Ⓗ Station No.							
2 to 20	2 stations / to / 20 stations(Refer to page 1740 for the max. station number)	●	●	●	●	●	2 to 15
Ⓘ Voltage							
4	12 VDC	●	●	●	●	●	●

⚠ Precautions for model No. selection

*1 Select M4GD*80EJ when mixing with 3, 5-port valves. Select M3GD*80EJ when mixing with masking plate.
*2 Dimensions are the same as the respective 2-position double solenoid.
*3 The push-in fitting cannot be mixed with the single valve's 4(A) or 2(B) port.
*4 M8 connector length is 300 mm. Select other lengths from page 1764.
*5 3-position all ports closed and PAB connection are not provided with exhaust check specifications (H). Refer to page 1773 for details on the exhaust check valve.
*6 A filter is built into port P as standard.
*7 For 4G4, selection of exhaust check valves (H), air supply spacers (Z1), in-stop valve spacers (Z2), or exhaust spacers (Z3) is not available.
*8 Specify the spacer mounting position and quantity on the manifold specifications sheet. Stacking of spacers is not possible. Combination with the masking plate is not supported. For details, refer to page 1758 to page 1762.
*9 4G4 cannot be selected for DIN rail mount (D).
*10 Explosion-proof barrier sold separately. Select from page 1768.

Manifold configuration explanation and parts list

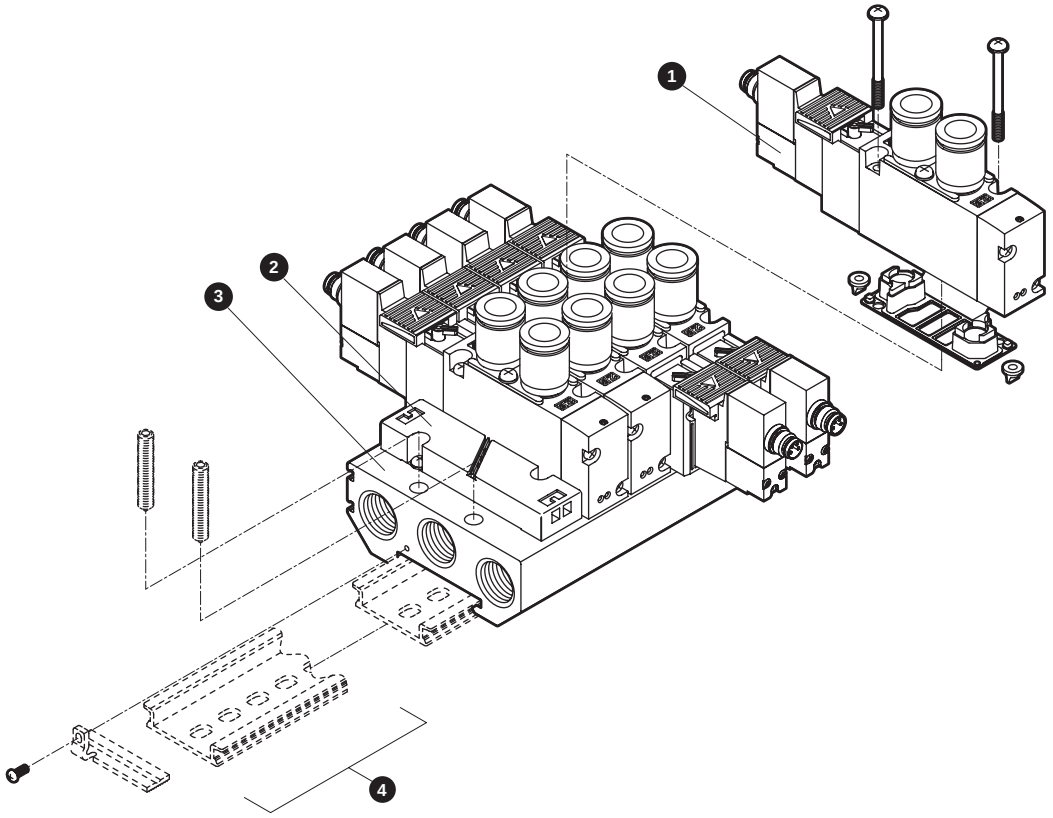

Note: For 4G4, there is no DIN rail mount option.

Main parts list

No.	Component name		Model No.	Description	Remarks
1	Discrete valve for integrated base		4GD□□9EJ- Port size - Electrical connections Option - Voltage Solenoid position Series flow rate size	Discrete valve Gasket 2 mounting screws (2 PR check valves)	Details on page 1742
2	Masking plate	3G1/4G1	4G1R-MP	Masking plate Gasket 2 mounting screws	* 4G3/4G4 have two PR check valves included.
		3G2/4G2	4G2R-MP		
		4G3	4G3R-MP		
		4G4	4GA4-MP		
3	Manifold base assembly		M4GA□R-00- Option - Station No. Series flow rate size	Manifold base	Even if "D" mounting is selected, the DIN rail kit must be handled separately.
4	DIN rail kit				Details on page 1775

Parts list

No.	Part name	Model No.
–	M8 connector cable	4GEX-M8CC- Direction - Length *Details on page 1764
–	Explosion-proof barrier	D5048S

* Refer to page 1768 for details on explosion-proof barriers.

No.	Part name			Model No.
–	Cartridge push-in fitting and related parts	4G1	ø1.8 straight	4G1R−JOINT−C18
			ø4 straight	4G1R−JOINT−C4
			ø6 straight	4G1R−JOINT−C6
		4G2	ø4 straight	4G2R−JOINT−C4
			ø6 straight	4G2R−JOINT−C6
			ø8 straight	4G2R−JOINT−C8
		4G3	ø6 straight	4G3R−JOINT−C6
			ø8 straight	4G3R−JOINT−C8
			ø10 straight	4G3R−JOINT−C10
		4G4	ø8 straight	4G4−JOINT−C8
			ø10 straight	4G4−JOINT−C10
			ø12 straight	4G4−JOINT−C12

Dimensions

M4GD1*0EJ

*The two 3-port valve built-in type has the same dimensions as the double model.

● Without connector (RN)

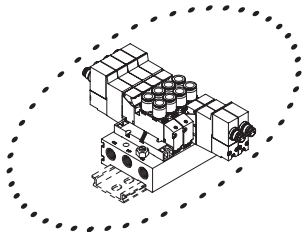

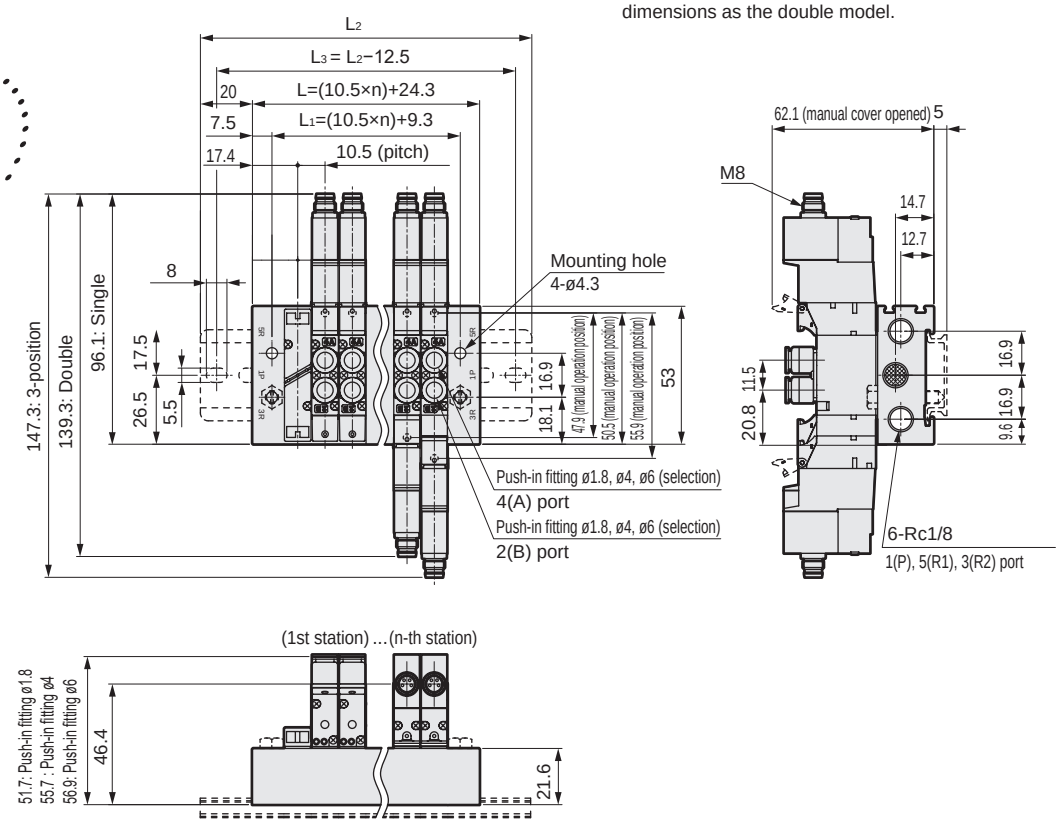

● M5 female thread (M5)

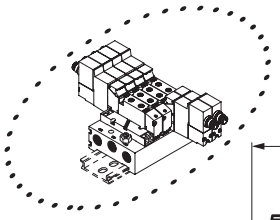

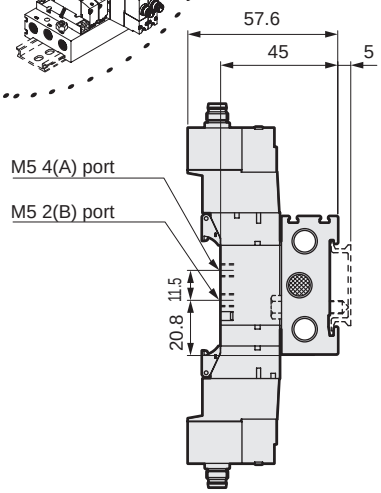

● M8 connector/straight cable (R1)

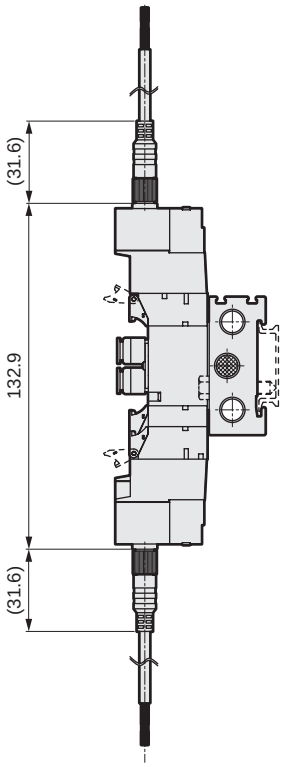

● M8 connector/L-type cable (R2)

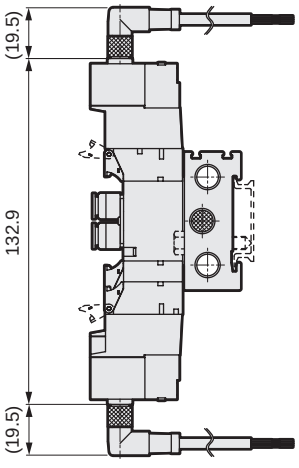

Station No.	2	3	4	5	6	7	8	9	10	11	12	13	14	15	16	17	18	19	20
L	45.3	55.8	66.3	76.8	87.3	97.8	108.3	118.8	129.3	139.8	150.3	160.8	171.3	181.8	192.3	202.8	213.3	223.8	234.3
L_1	30.3	40.8	51.3	61.8	72.3	82.8	93.3	103.8	114.3	124.8	135.3	145.8	156.3	166.8	177.3	187.8	198.3	208.8	219.3
L_2	87.5	100.0	112.5	125.0	137.5	150.0	150.0	162.5	175.0	187.5	200.0	212.5	212.5	225.0	237.5				
L_3	75.0	87.5	100.0	112.5	125.0	137.5	137.5	150.0	162.5	175.0	187.5	200.0	200.0	212.5	225.0				

Dimensions

M4GD2*0EJ

● Without connector (RN)

The two 3-port valve built-in type has the same dimensions as the double model.

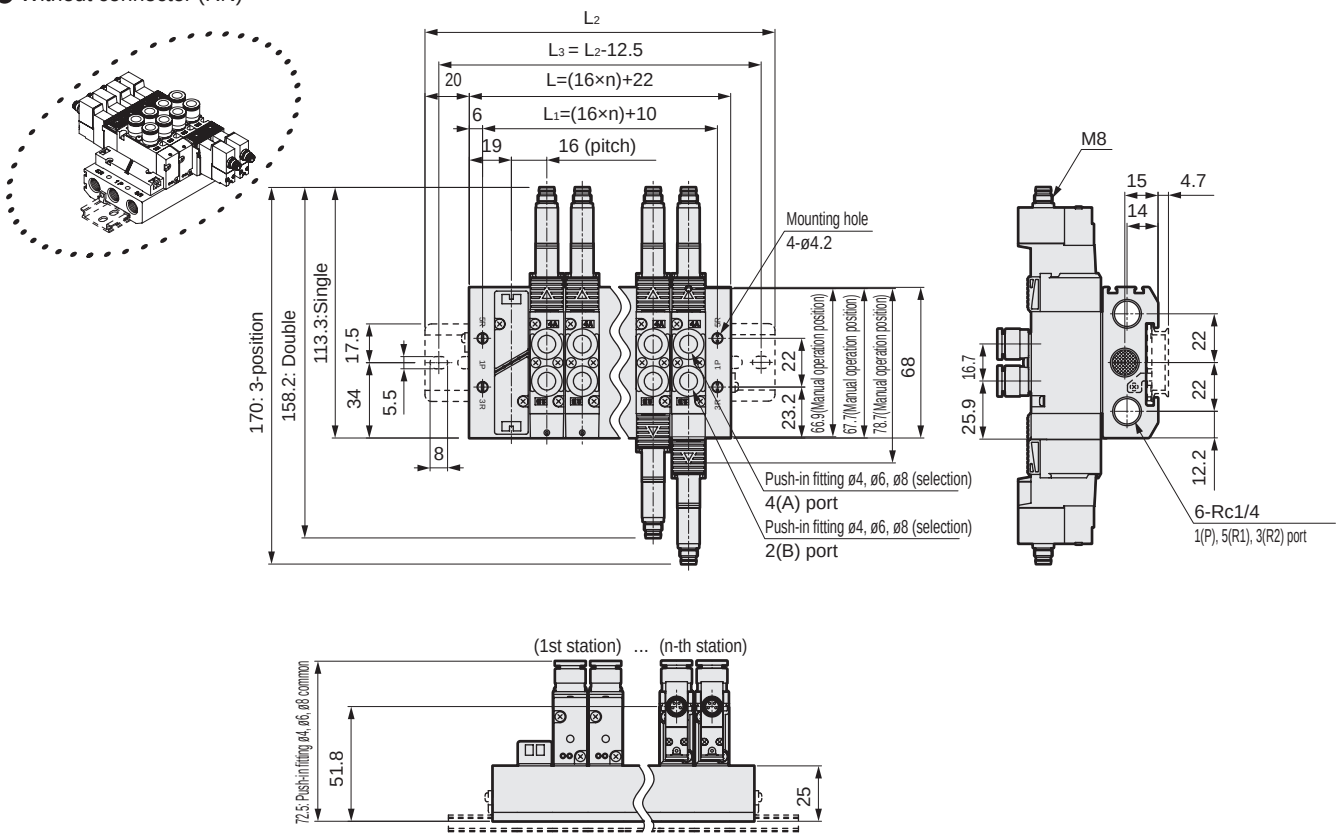

● Rc1/8 female thread (06)

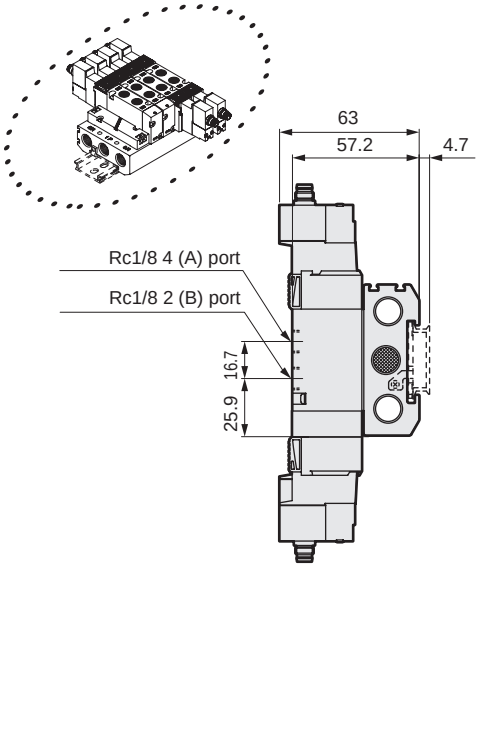

● M8 connector/straight cable (R1)

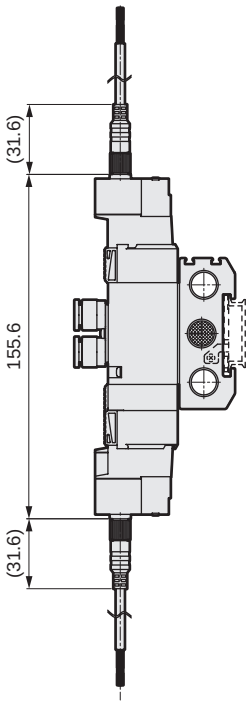

● M8 connector/L-type cable (R2)

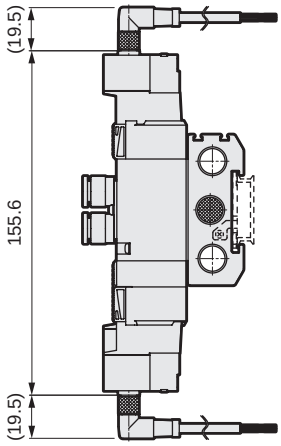

Station No.	2	3	4	5	6	7	8	9	10	11	12	13	14	15	16	17	18	19	20
L	54.0	70.0	86.0	102.0	118.0	134.0	150.0	166.0	182.0	198.0	214.0	230.0	246.0	262.0	278.0	294.0	310.0	326.0	342.0
L_1	42.0	58.0	74.0	90.0	106.0	122.0	138.0	154.0	170.0	186.0	202.0	218.0	234.0	250.0	266.0	282.0	298.0	314.0	330.0
L_2	100.0	112.5	137.5	150.0	162.5	175.0	200.0	212.5	225.0	250.0	262.5	275.0	287.5	312.5	325.0				
L_3	87.5	100.0	125.0	137.5	150.0	162.5	187.5	200.0	212.5	237.5	250.0	262.5	275.0	300.0	312.5				

Dimensions

M4GD3*0EJ

● Without connector (RN)

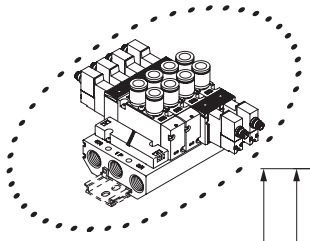

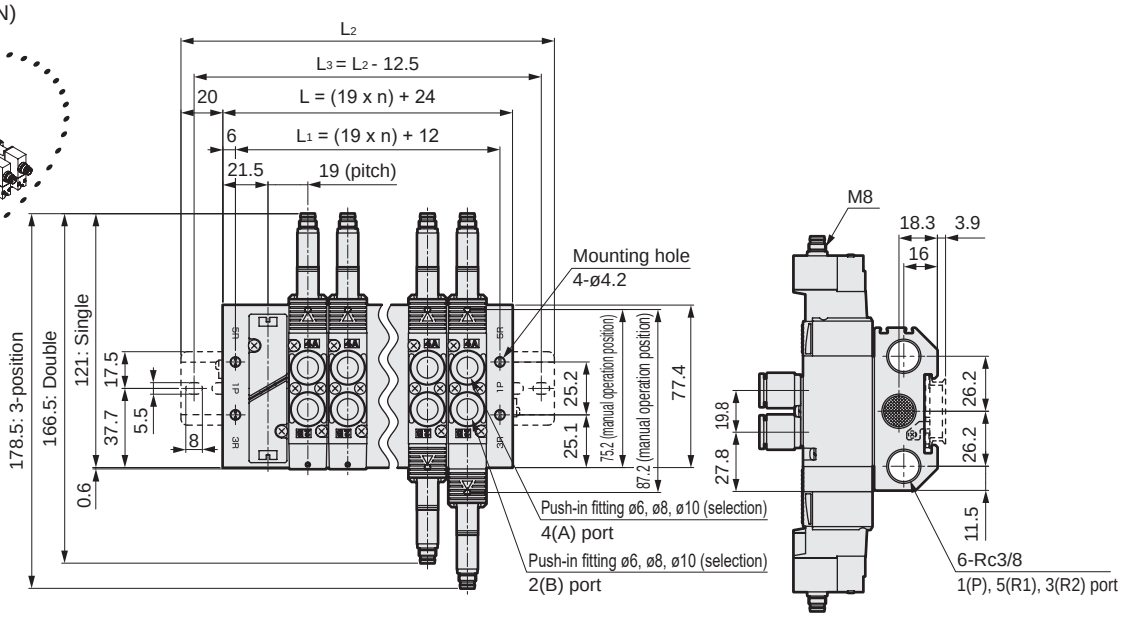

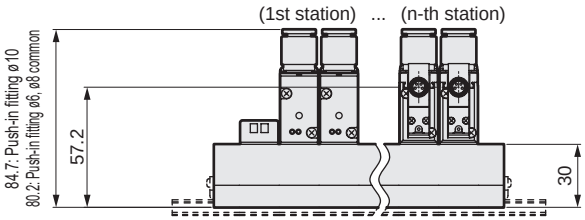

● Rc1/4 female thread (08)

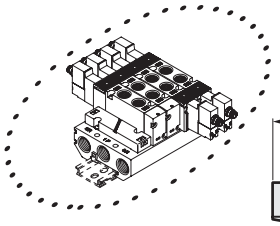

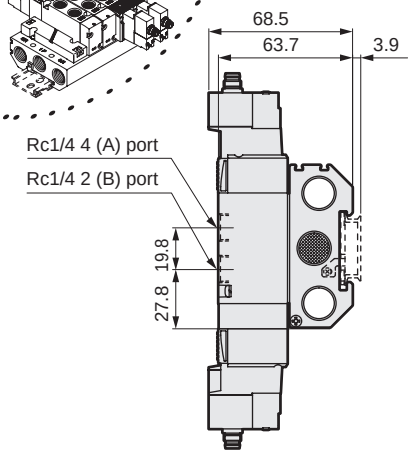

● M8 connector/straight cable (R1)

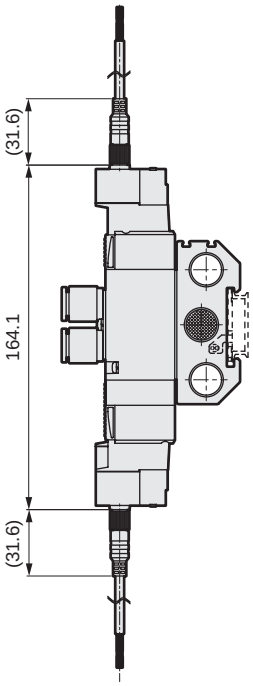

● M8 connector/L-type cable (R2)

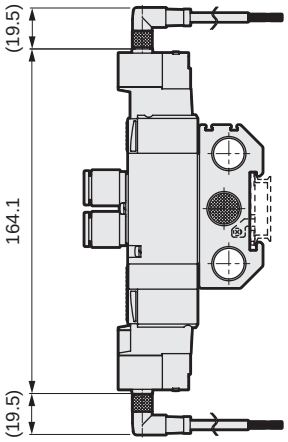

Station No.	2	3	4	5	6	7	8	9	10	11	12	13	14	15	16	17	18	19	20
L	62.0	81.0	100.0	119.0	138.0	157.0	176.0	195.0	214.0	233.0	252.0	271.0	290.0	309.0	328.0	347.0	366.0	385.0	404.0
L1	50.0	69.0	88.0	107.0	126.0	145.0	164.0	183.0	202.0	221.0	240.0	259.0	278.0	297.0	316.0	335.0	354.0	373.0	392.0
L2	112.5	125.0	150.0	162.5	187.5	200.0	225.0	237.5	262.5	275.0	300.0	312.5	337.5	350.0	375.0				
L3	100.0	112.5	137.5	150.0	175.0	187.5	212.5	225.0	250.0	262.5	287.5	300.0	325.0	337.5	362.5				

Dimensions

M4GD4*0EJ

● Without connector (RN)

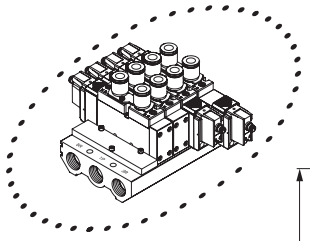

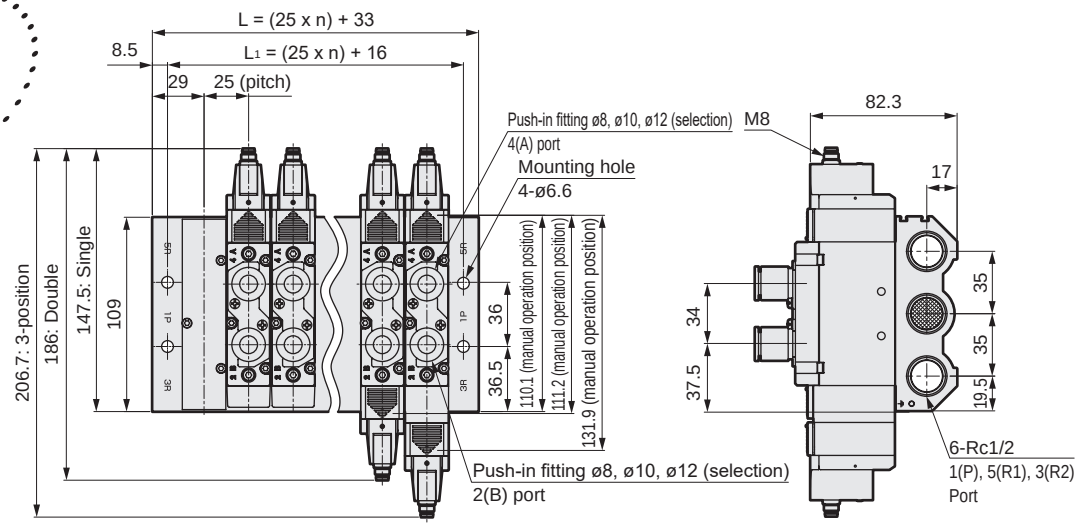

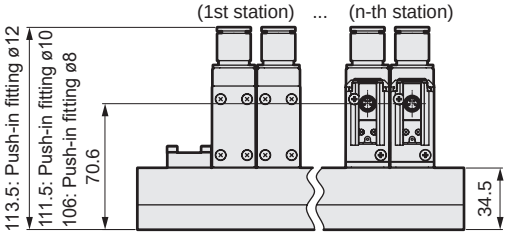

● Rc3/8 female thread (10)

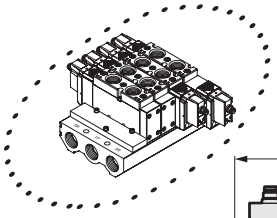

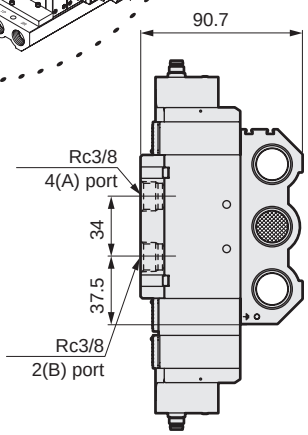

● M8 connector/straight cable (R1)

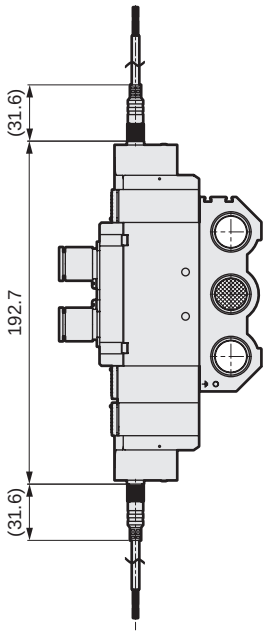

● M8 connector/L-type cable (R2)

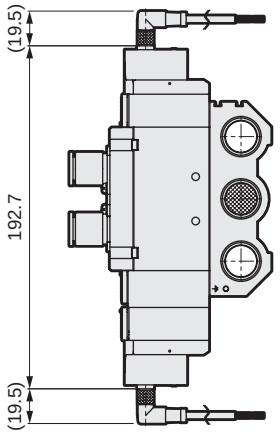

Station No.	2	3	4	5	6	7	8	9	10	11	12	13	14	15
L	83	108	133	158	183	208	233	258	283	308	333	358	383	408
L_1	66	91	116	141	166	191	216	241	266	291	316	341	366	391

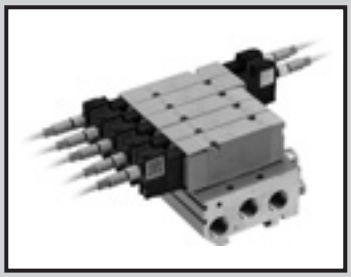

Individual wiring manifold
Base piping
Direct mount/DIN rail mount

M3GE1/2EJ / M4GE1/2/3/4EJ-(D) Series

● Applicable cylinder bore size: ø20 to ø140

JIS symbol

● Two 3-port valves integrated
(A side valve: NC, B side valve: NC)

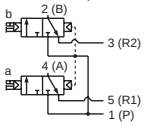

● 5-port valve

2-position single

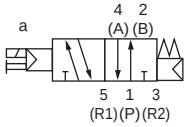

2-position double

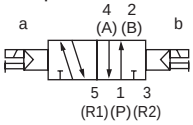

3-position
All ports closed

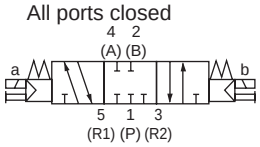

3-position A/B/R connection

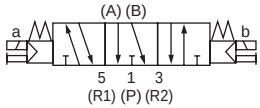

3-position P/A/B connection

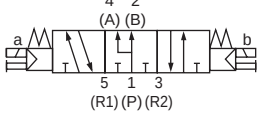

Manifold common specifications

1 MPa ≈ 145.0 psi, 1 MPa = 10 bar

Item		Description
Manifold		Integrated base
Mounting method		Direct mount/DIN rail mount
Air supply and exhaust method		Common supply/common exhaust (With internal exhaust check valve)
Pilot exhaust method	Internal pilot	Main valve/pilot valve common exhaust (Standard) (Pilot exhaust check valve built-in)
Piping direction		Side direction of base
Valve and operation		Pilot operated soft spool valve
Working fluid		Compressed air
Max. working pressure MPa		0.7 (≈101 psi, 7 bar)
Min. working pressure MPa		0.2 (≈29 psi, 2 bar)
Proof pressure MPa		1.05 (≈152 psi, 10 bar)
Ambient temperature °C		-5 (23°F) to 55 (131°F) (no freezing)
Fluid temperature °C		5 (41°F) to 55 (131°F)
Manual override		Non-locking/locking common
Lubrication *1		Not required
Degree of protection *2		IP67
Vibration resistance m/s^2		50 or less
Shock resistance m/s^2		300 or less
Atmosphere		Cannot be used in corrosive gas environments

Solenoid specifications

Item	Description
Rated voltage V	12 DC
Voltage fluctuation range	+10% -20%
Rated current A	0.05
Power consumption W (*3)	0.6
Thermal class	B

*1: Use turbine oil Class 1 ISO VG32 for lubrication. Excessive or intermittent lubrication results in unstable operation.

*2: Tested according to the test method for IP67 (IEC60529) standards. Note that while the unit is protected from dust and water, it cannot be used immersed in water. Countermeasures such as covering the unit should also be taken if using in environments where it will be constantly exposed to dust or water.

Intrinsic safety explosion-proof specifications

Item	Description
Types of explosion-proof structures	Intrinsic safety explosion-proof structure (ib)
Target gas or above listed ignitability and flame-proof grade	Ex ib IIC T4 Gb
Barrier input voltage	24 VDC
Intrinsic safety circuit allowable voltage Ui	30 VDC
Intrinsic safety circuit allowable current Ii	200 mA
Intrinsic safety circuit allowable power Pi	0.68 W
Internal inductance Li	Value that can be ignored
Internal capacitance Ci	Value that can be ignored

Individual specifications

Port size	M3GE1/M4GE1		M3GE2/M4GE2		M4GE3		M4GE4	
	Direct mount	DIN rail mount	Direct mount	DIN rail mount	Direct mount	DIN rail mount	Direct mount	
							Rc1/4 Rc3/8	Rc1/2
Max. station No.	20 stations	16 stations	20 stations	16 stations	20 stations	16 stations	15 stations	12 stations
2, 4-port (port A/B)	Push-in fitting ø1.8, ø4, ø6 M5		Push-in fitting ø4, ø6, ø8 Rc1/4		Push-in fitting ø6, ø8, ø10 Rc1/4		Push-in fitting ø8, ø10, ø12 Rc1/4, Rc3/8	Rc1/2
1, 3, 5-port (port P/R1/R2)	Rc1/8		Rc1/8		Rc3/8		Rc3/8	Rc1/2
Manifold base Weight calculation formula (n: station No.) g	35n + 61	36n + 115	71n + 106	73n + 134	113n + 170	115n + 119	273n + 329	391n + 560

Refer to "Cautions for mounting the DIN rail" (page 1775) before selection.
For 10 or over manifold station No. (5 stations for 4G3 and 4G4), use ports on both side for air supply and exhaust.
The manifold base weight is the value for screw specifications.
M4GE4 is only compatible with direct mounting.

Flow characteristics

Model No.	Solenoid position		P→A/B		A/B→R1/R2			
			C[dm³/(s·bar)]	b	C[dm³/(s·bar)]		b	
M3GE1 M4GE1	Two 3-port valves integrated		0.86	0.35	1.1	(0.67)	0.22	(0.23)
	2-position		1.1	0.22	1.2	(0.70)	0.20	(0.10)
	3-position	All ports closed	0.98	0.22	1.1	—	0.24	—
		ABR connection	0.97	0.35	1.3	(0.68)	0.22	(0.24)
		PAB connection	1.1	0.38	1.1	—	0.21	—
M3GE2 M4GE2	Two 3-port valves integrated		1.7	0.44	2.1	(1.6)	0.32	(0.30)
	2-position		2.4	0.34	2.7	(1.7)	0.24	(0.31)
	3-position	All ports closed	2.2	0.34	2.4	—	0.29	—
		ABR connection	2.2	0.34	2.8	(1.8)	0.24	(0.27)
		PAB connection	2.4	0.29	2.4	—	0.29	—
M4GE3	2-position		3.5	0.34	3.8	(2.6)	0.11	(0.27)
	3-position	All ports closed	3.1	0.33	3.3	—	0.22	—
		ABR connection	3.0	0.30	3.8	(2.7)	0.11	(0.22)
		PAB connection	3.6	0.36	3.3	—	0.28	—
M4GE4 1-port size Rc3/8	2-position		6.4	0.42	6.9	—	0.12	—
	3-position	All ports closed	6.0	0.37	6.8	—	0.12	—
		ABR connection	6.0	0.31	7.1	—	0.11	—
		PAB connection	6.0	0.37	6.8	—	0.13	—
M4GE4 1-port size Rc1/2	2-position		8.3	0.23	9.0	—	0.21	—
	3-position	All ports closed	7.4	0.15	8.8	—	0.19	—
		ABR connection	7.5	0.28	9.4	—	0.17	—
		PAB connection	7.7	0.21	8.7	—	0.18	—

*1: Effective cross-sectional area S and sonic conductance C use the conversion formula S ≈ 5.0 × C.
*2: Values in ( ) are with the exhaust check valve.

M3GE1/2 / M4GE1/2/3/4*0EJ Series

Individual wiring manifold; base piping

How to order

Manifold model No.

M 4GE1 1 0 EJ - C4 - RN H ( ) - 6 - 4

3-port manifold model No.

M 3GE1 66 0 EJ - M5 - RN H ( ) - 2 - 4

Discrete valve for integrated base

4GE1 1 9 EJ - 00 - RN H — 4

3-port discrete valve for integrated base

3GE1 66 9 EJ - 00 - RN H — 4

Ⓐ Model No.

Ⓑ Solenoid position

Ⓒ Explosion-proof Series

Ⓓ Port size

Ⓔ Electrical connections

Ⓕ Option

Ⓖ Mount type

Ⓗ Station No.

Ⓘ Voltage

Code	Description	Ⓐ Model No. 3GE1	3GE2	4GE1	4GE2	4GE3	4GE4
Ⓑ Solenoid position							
1	2 position single			●	●	●	●
2	2-position double			●	●	●	●
3	3-position all ports closed			●	●	●	●
4	3-position ABR connection			●	●	●	●
5	3-position PAB connection			●	●	●	●
66	3-port valve Two valves integrated *1, 2 — A valve side: Normally closed / B valve side: Normally closed	●	●				
8	Mix manifold (when there are multiple solenoid positions)	●	●	●	●	●	●
Ⓒ Explosion-proof Series							
EJ	Japan Explosion-Proof Inspected Product	●	●	●	●	●	●
Ⓓ Port size {2(B), 4(A) port}							
Port	4(A)/2(B) port	Port P/R1/R2 (1/8) = Rc1/8 (1/4) = Rc1/4 (3/8) = Rc3/8 (5)=Rc1/2					
C18	ø1.8 push-in fitting	(2)		(2)			
C4	ø4 push-in fitting	(2)	(3)	(2)	(3)		
C6	ø6 push-in fitting	(2)	(3)	(2)	(3)	(4)	
C8	ø8 push-in fitting		(3)		(3)	(4)	(4)
C10	ø10 push-in fitting					(4)	(4)
C12	ø12 push-in fitting						(4)
CX	Push-in fitting mix	(2)	(3)	(2)	(3)	(4)	(4)
M5	M5	(2)		(2)			
06	Rc1/8		(3)		(3)		
08	Rc1/4					(4)	(4)
10	Rc3/8						(4)
12	Rc1/2						(5)
00	Valve for base mounting	●	●	●	●	●	●
Ⓔ Electrical connections							
RN	M8 connector without cable	●	●	●	●	●	●
R1	M8 connector Straight cable *3	●	●	●	●	●	●
R2	M8 connector L-type cable *3	●	●	●	●	●	●
Ⓕ Option							
Blank	Manual override of non-locking/locking common (standard)	●	●	●	●	●	●
H	With exhaust check valve *4, 6	●	●	●	●	●	
A	Ozone/coolant proof	●	●	●	●	●	●
F	Port A/B filter *5	●	●	●	●	●	●
Z1	Air supply spacer *6, 7	●	●	●	●	●	
Z2	In-stop valve spacer *6, 7	●	●	●	●	●	
Z3	Exhaust spacer *6, 7	●	●	●	●	●	
Ⓖ Mount type							
Blank	Direct mount *8	●	●	●	●	●	●
D	DIN rail mount *9	●	●	●	●	●	
Ⓗ Station No.							*10
2 to 20	2 stations / to / 20 stations (Refer to page 1748 for the max. station No.)	●	●	●	●	●	2 to 15
Ⓘ Voltage							
4	12 VDC	●	●	●	●	●	●

⚠ Precautions for model No. selection

*1 Select M4GE*80EJ when mixing with 3, 5-port valves. Further, select M3GE*80EJ when mixing with masking plate.

*2 Dimensions are the same as the respective 2-position double solenoid.

*3 M8 connector length is 300 mm. Select other lengths from page 1764.

*4 3-position all ports closed and PAB connection are not provided with exhaust check valve specifications (H). Refer to page 1773 for details on the exhaust check valve.

*5 A filter is built into port P as standard.

*6 For 4G4, selection of exhaust check valves (H), air supply spacers (Z1), in-stop valve spacers (Z2), or exhaust spacers (Z3) is not available.

*7 Specify the spacer mounting position and quantity on the manifold specifications sheet. Stacking of spacers is not possible. Combination with the masking plate is not supported. For details, refer to page 1758 to page 1762.

*8 The direct mount type of M4GE1EJ cannot be changed after purchase to the DIN rail mount type.

*9 For 4G4, DIN rail mount (D) cannot be selected.

*10 The manifold max. station No. for port size 12 M4GE4 is 12.

*11 Explosion-proof barrier sold separately. Select from page 1768.

Manifold configuration explanation and parts list

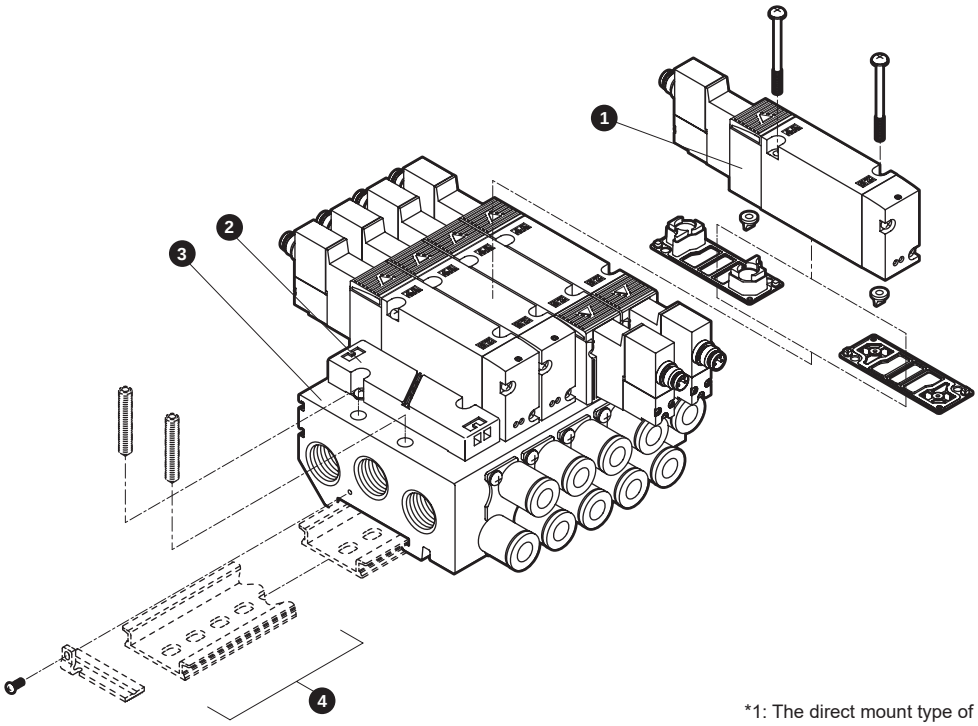

*1: The direct mount type of M4GE1 cannot be changed to the DIN rail mount type.
*2: For 4G4, there is no DIN rail mount option.

Main parts list

No.	Component name		Model No.	Description	Remarks
1	Discrete valve for integrated base		4GE□□9EJ-00-[Electrical connections][Option]-[Voltage] [Solenoid position] [Series flow rate size]	Discrete valve Gasket 2 mounting screws (2 PR check valves)	Details on page 1750
2	Masking plate	3G1/4G1	4G1R-MP	Masking plate Gasket 2 mounting screws	* 4G3/4G4 have two PR check valves included.
		3G2/4G2	4G2R-MP		
		4G3	4G3R-MP		
		4G4	4GB4-MP		
3	Manifold base assembly		M4GB□R-[Port size]-[Option][D]-[Station No.] [Series flow rate size] [Mount type]	Manifold base	Even if "D" mounting is selected, the DIN rail kit must be handled separately.
4	DIN rail kit				Details on page 1775

Parts list

No.	Part name	Model No.
–	M8 connector cable	4GEX-M8CC-[Direction]-[Length] *Details on page 1764
–	Explosion-proof barrier	D5048S

*Refer to page 1768 for details on explosion-proof barriers.

No.	Part name			Model No.
–	Cartridge push-in fitting and related parts	4G1	ø1.8 straight	4G1R−JOINT−C18
			ø4 straight	4G1R−JOINT−C4
			ø6 straight	4G1R−JOINT−C6
			Plug cartridge	4G1R−JOINT−CPG
		4G2	ø4 straight	4G2R−JOINT−C4
			ø6 straight	4G2R−JOINT−C6
			ø8 straight	4G2R−JOINT−C8
			Plug cartridge	4G2R−JOINT−CPG
		4G3	ø6 straight	4G3R−JOINT−C6
			ø8 straight	4G3R−JOINT−C8
			ø10 straight	4G3R−JOINT−C10
			Plug cartridge	4G3R−JOINT−CPG
		4G4	ø8 straight	4G4−JOINT−C8
			ø10 straight	4G4−JOINT−C10
			ø12 straight	4G4−JOINT−C12

Dimensions

M4GE1*0EJ

● Direct mount installation
Without connector (RN)

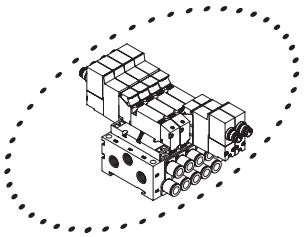

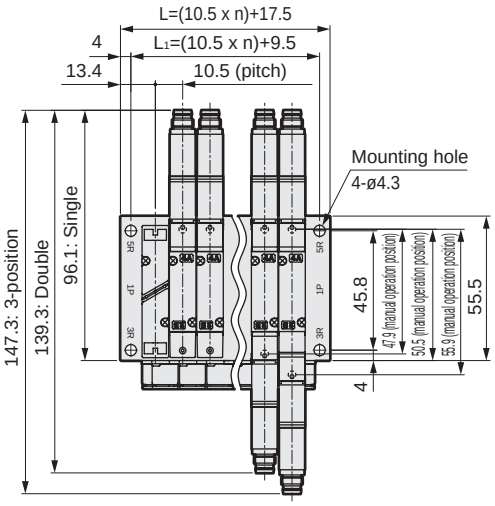

*1: Dedicated for direct mounting. This cannot be changed to DIN rail specifications.
*2: The two 3-port valve built-in type has the same dimensions as the double model.

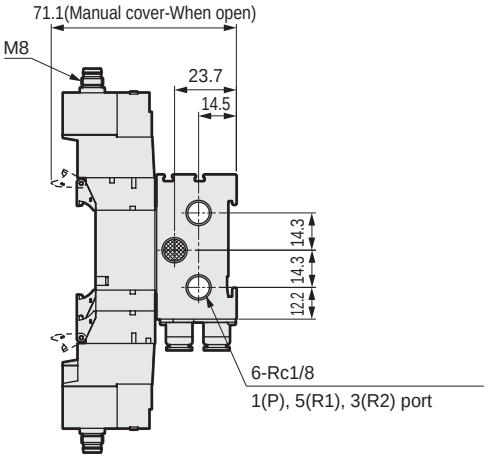

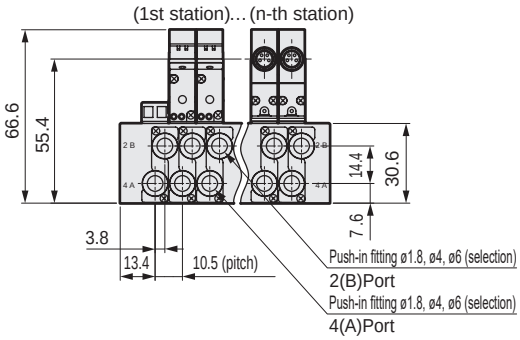

● ø1.8 (C18) ● ø4(C4) ● ø6(C6)

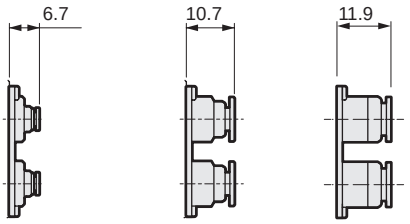

● M5 female thread (M5)

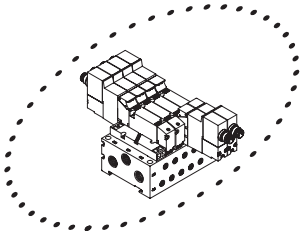

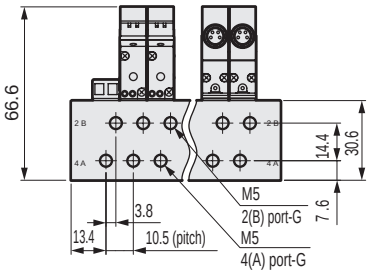

● M8 connector/straight cable (R1)

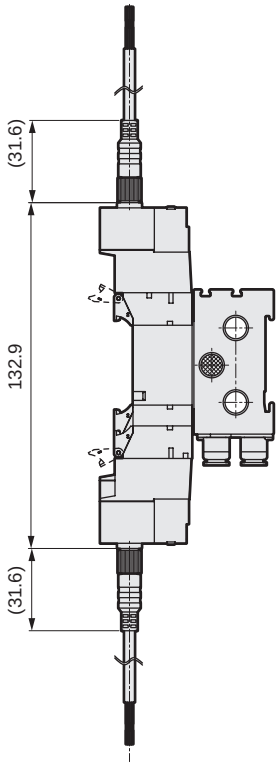

● M8 connector/L-type cable (R2)

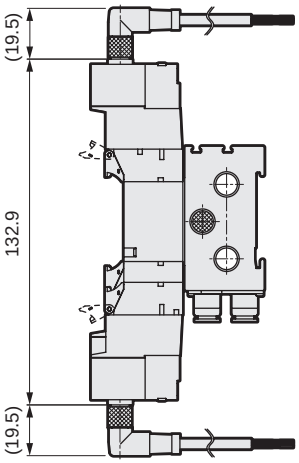

Station No.	2	3	4	5	6	7	8	9	10	11	12	13	14	15	16	17	18	19	20
L	38.5	49.0	59.5	70.0	80.5	91.0	101.5	112.0	122.5	133.0	143.5	154.0	164.5	175.0	185.5	196.0	206.5	217.0	227.5
L1	30.5	41.0	51.5	62.0	72.5	83.0	93.5	104.0	114.5	125.0	135.5	146.0	156.5	167.0	177.5	188.0	198.5	209.0	219.5

Dimensions

M4GE1*0EJ

● DIN rail mounting (D)
Without connector (RN)

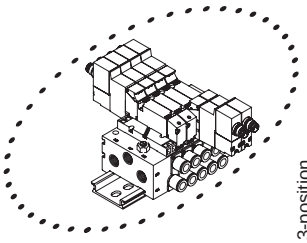

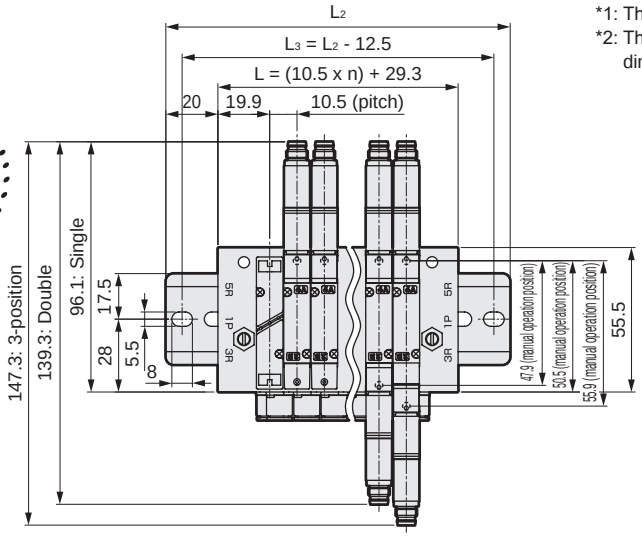

*1: This can be changed to direct mount specifications.
*2: The two 3-port valves integrated type has the same dimensions as the double type.

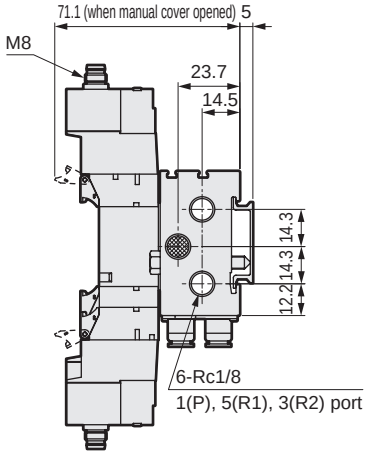

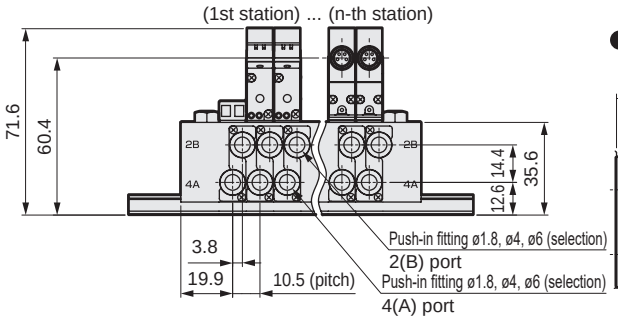

● ø1.8 (C18) ● ø4 (C4) ● ø6(C6)

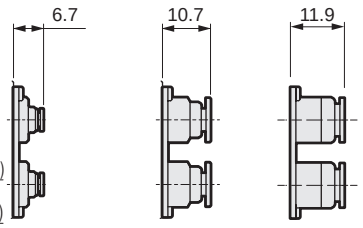

● DIN rail mounting (D)
M5 female thread (M5)

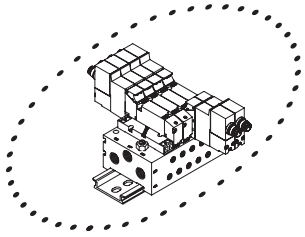

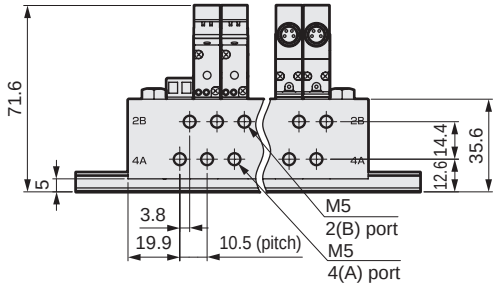

● DIN rail mounting (D)
M8 connector/straight cable (R1)

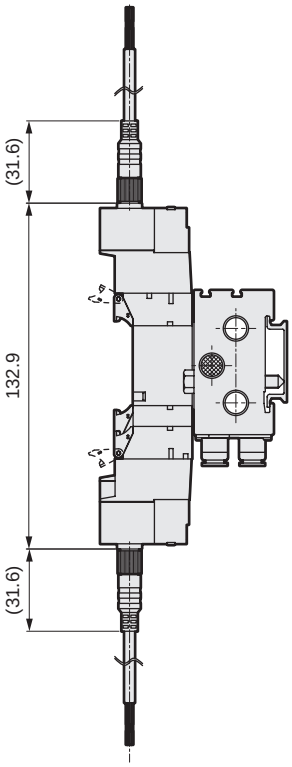

● M8 connector/L-type cable (R2)

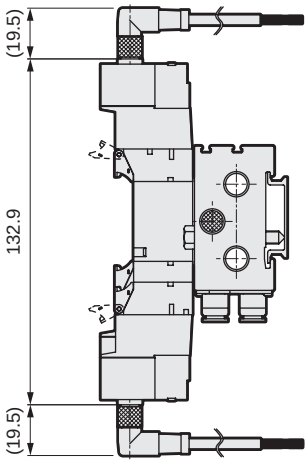

Station No.	2	3	4	5	6	7	8	9	10	11	12	13	14	15	16
L	50.3	60.8	71.3	81.8	92.3	102.8	113.3	123.8	134.3	144.8	155.3	165.8	176.3	186.8	197.3
L_2	100.0	112.5	112.5	125.0	137.5	150.0	162.5	175.0	175.0	187.5	200.0	212.5	225.0	237.5	237.5
L_3	87.5	100.0	100.0	112.5	125.0	137.5	150.0	162.5	162.5	175.0	187.5	200.0	212.5	225.0	225.0

Dimensions

M4GE2*0EJ

● Without connector (RN)

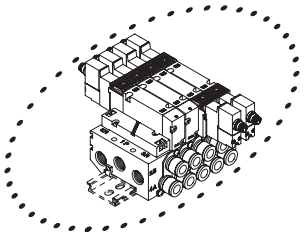

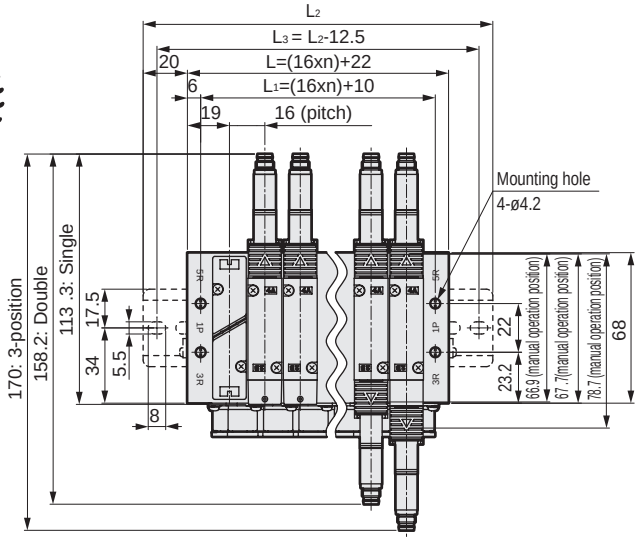

Note The two 3-port valve built-in type has the same dimensions as the double model.

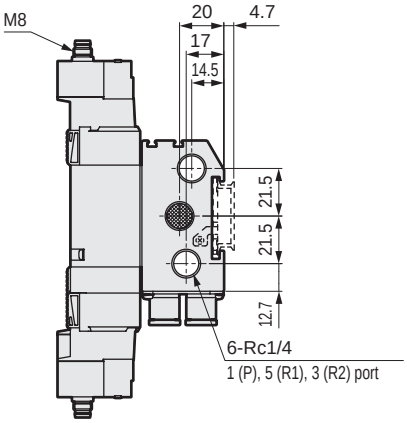

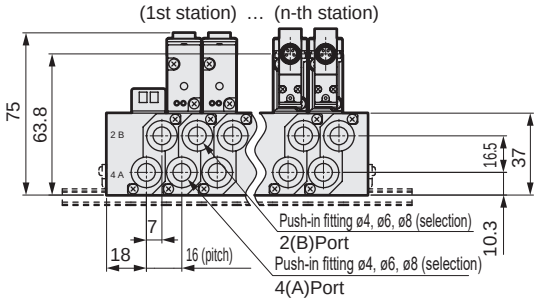

● Fitting straight
● ø4(C4) ● ø6(C6) ● ø8(C8)

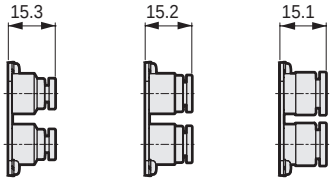

● Rc1/8 female thread (06)

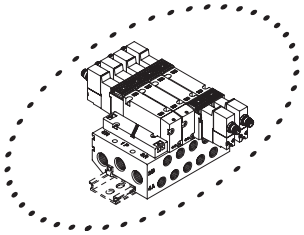

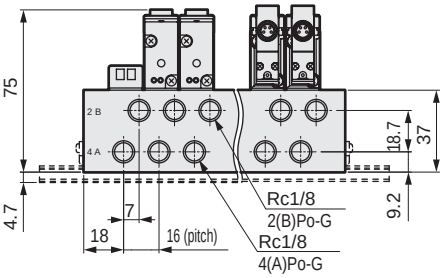

● M8 connector/straight cable (R1)

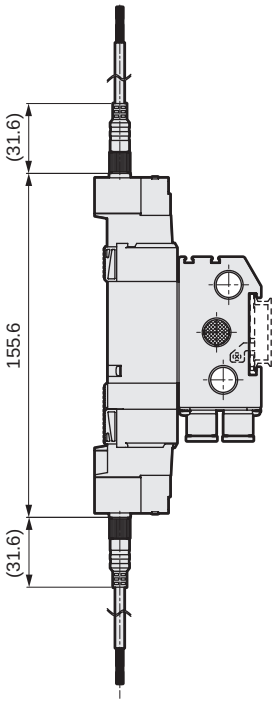

● M8 connector/L-type cable (R2)

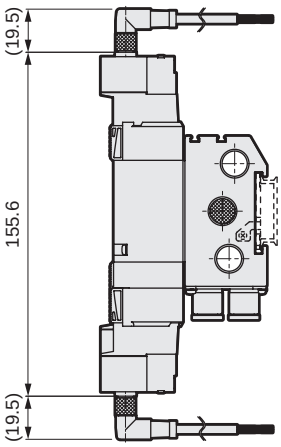

Station No.	2	3	4	5	6	7	8	9	10	11	12	13	14	15	16	17	18	19	20
L	54.0	70.0	86.0	102.0	118.0	134.0	150.0	166.0	182.0	198.0	214.0	230.0	246.0	262.0	278.0	294.0	310.0	326.0	342.0
L_1	42.0	58.0	74.0	90.0	106.0	122.0	138.0	154.0	170.0	186.0	202.0	218.0	234.0	250.0	266.0	282.0	298.0	314.0	330.0
L_2	100.0	112.5	137.5	150.0	162.5	175.0	200.0	212.5	225.0	250.0	262.5	275.0	287.5	312.5	325.0				
L_3	87.5	100.0	125.0	137.5	150.0	162.5	187.5	200.0	212.5	237.5	250.0	262.5	275.0	300.0	312.5				

Dimensions

M4GE3*0EJ

● Without connector (RN)

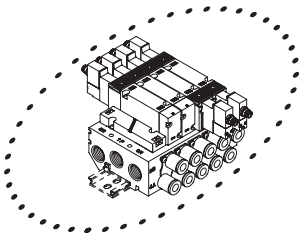

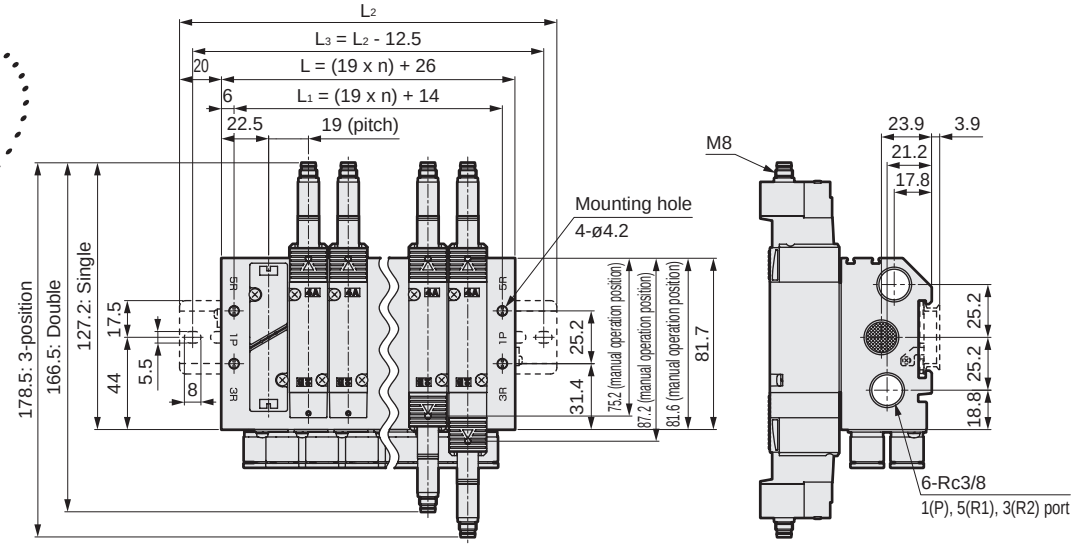

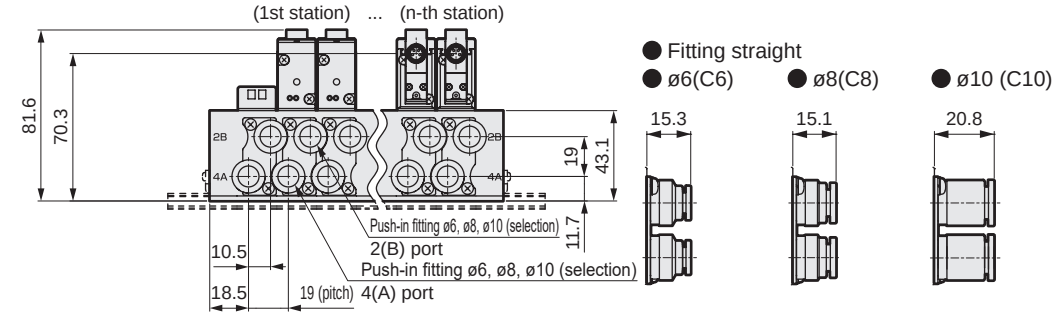

● Rc1/4 female thread (08)

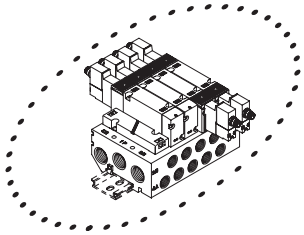

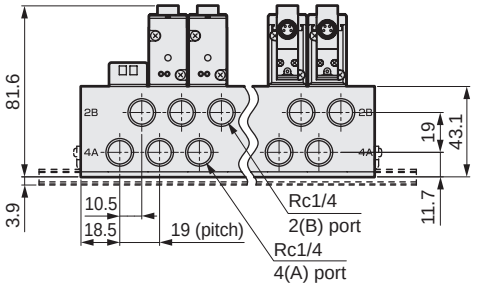

● M8 connector/straight cable (R1)

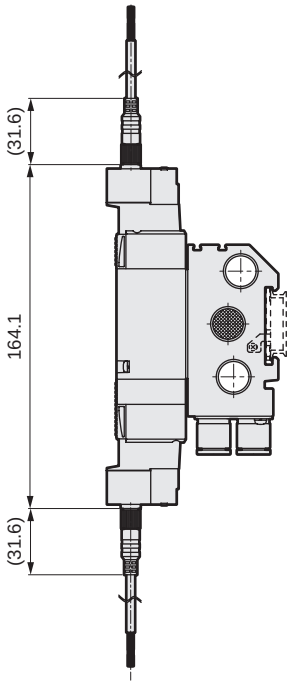

● M8 connector/L-type cable (R2)

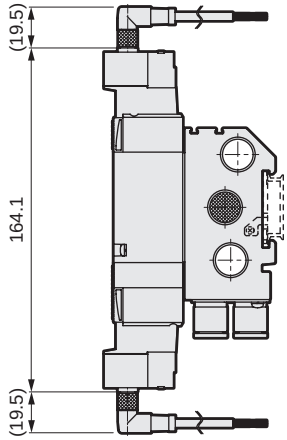

Station No.	2	3	4	5	6	7	8	9	10	11	12	13	14	15	16	17	18	19	20
L	64.0	83.0	102.0	121.0	140.0	159.0	178.0	197.0	216.0	235.0	254.0	273.0	292.0	311.0	330.0	349.0	368.0	387.0	406.0
L1	52.0	71.0	90.0	109.0	128.0	147.0	166.0	185.0	204.0	223.0	242.0	261.0	280.0	299.0	318.0	337.0	356.0	375.0	394.0
L2	112.5	125.0	150.0	162.5	187.5	200.0	225.0	237.5	262.5	275.0	300.0	325.0	337.5	362.5	375.0				
L3	100.0	112.5	137.5	150.0	175.0	187.5	212.5	225.0	250.0	262.5	287.5	312.5	325.0	350.0	362.5				

Dimensions

M4GE4*0EJ

● Without connector (RN)

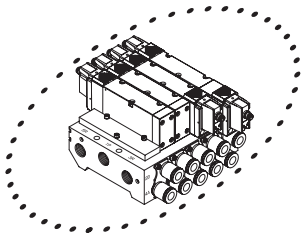

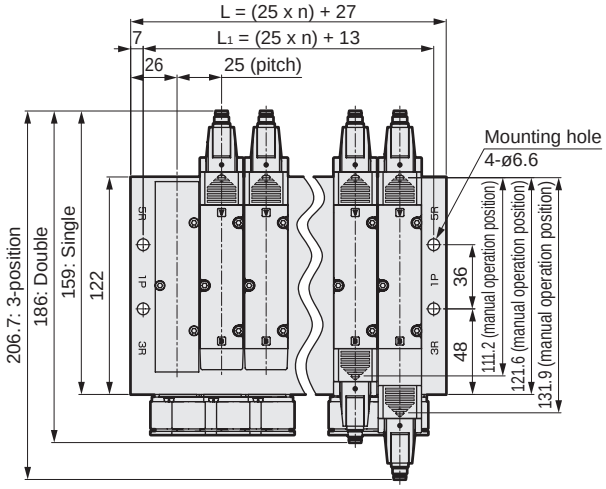

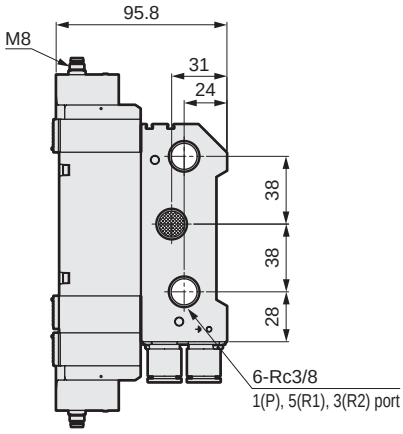

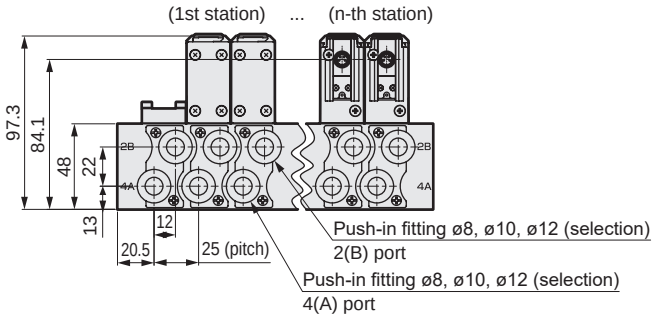

● Rc1/4, Rc3/8 female thread (08, 10)

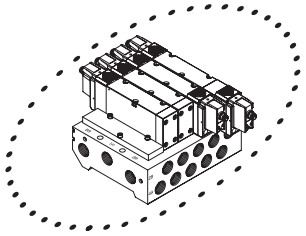

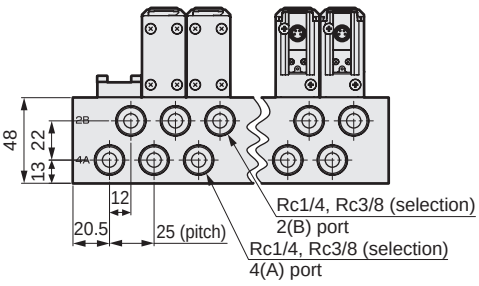

● M8 connector/straight cable (R1)

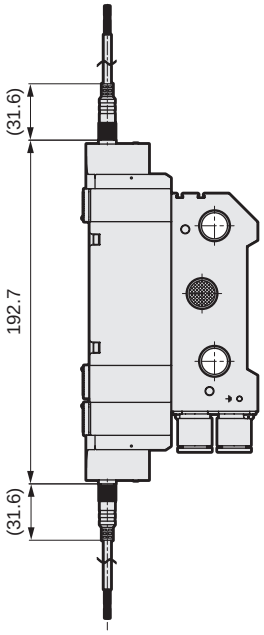

● M8 connector/L-type cable (R2)

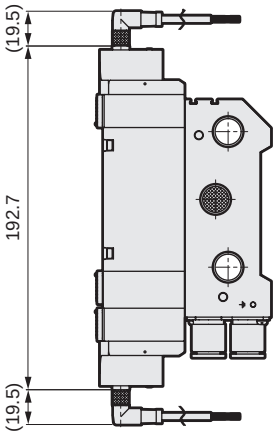

Station No.	2	3	4	5	6	7	8	9	10	11	12	13	14	15
L	77	102	127	152	177	202	227	252	277	302	327	352	377	402
L1	63	88	113	138	163	188	213	238	263	288	313	338	363	388

Dimensions

M4GE4*0EJ

● Rc1/2 female thread (15)
Without connector (RN)

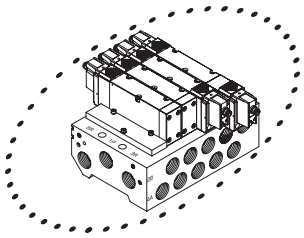

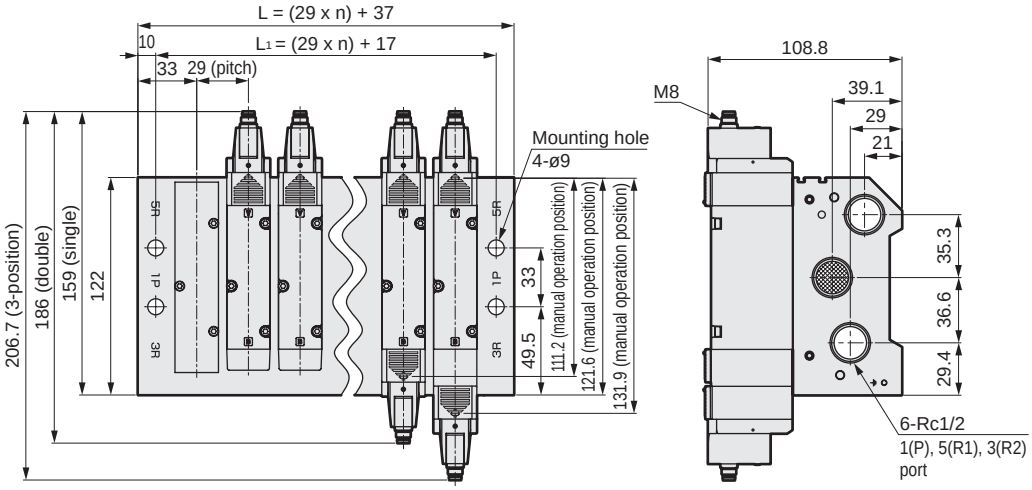

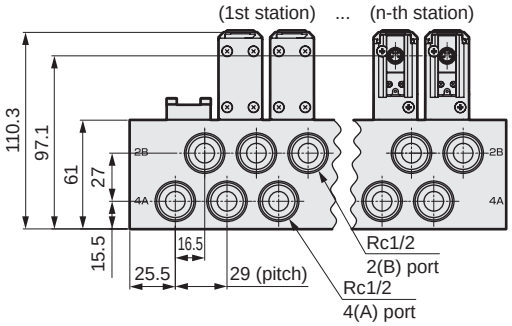

● M8 connector/straight cable (R1)

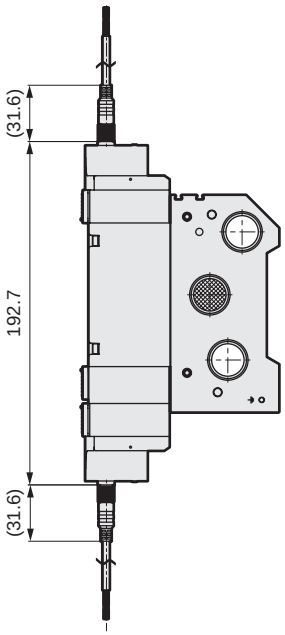

● M8 connector/L-type cable (R2)

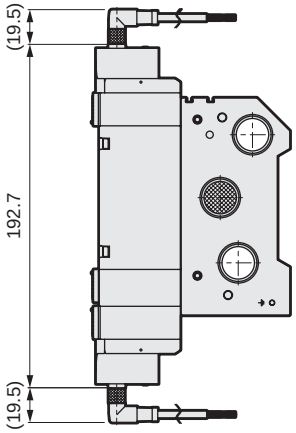

Station No.	2	3	4	5	6	7	8	9	10	11	12
L	95	124	153	182	211	240	269	298	327	356	385
L1	75	104	133	162	191	220	249	278	307	336	365

Related products

● In-stop valve spacer

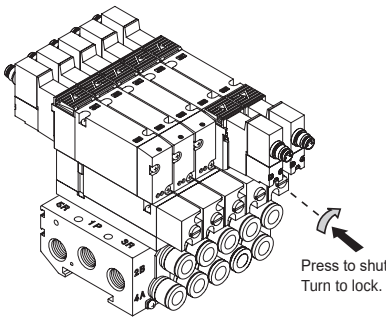

Specifications

Model No.	P → A/B		A/B→R		Weight g
	C[dm³/(s·bar)]	b	C[dm³/(s·bar)]	b	
4G1	0.54	0.03	0.82	0.27	17
4G2	1.5	0.17	1.6	0.20	63
4G3	1.9	0.09	2.8	0.16	80

*1: Values with base piping and 2-position valve mounted.
*2: The effective cross-sectional area when discharging residual pressure is 1.0 mm² (reference value).
*3: Effective cross-sectional area S and sonic conductance C are converted as S ≈ 5.0 x C.
*4: For 4G4, in-stop valve spacers are not available.
Attachments: 2 PR check valves, 1 body gasket

How to order discrete units

4G1R - IS
4G2R - IS
4G3R - IS

In-stop valve spacer

JIS symbol

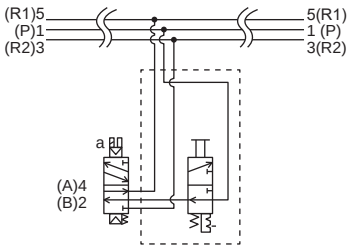

Precautions for model No. selection

*1: Specify the spacer mounting position and quantity in manifold specifications sheet.

Dimensions

● 4G1

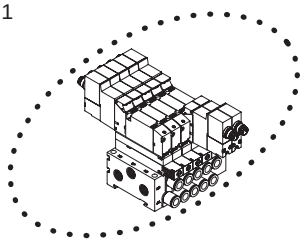

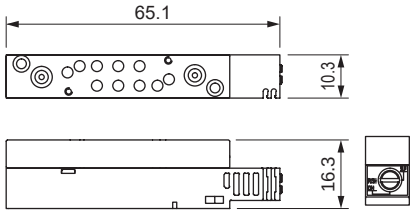

Dimensions when mounted

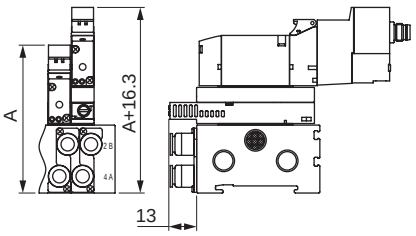

● 4G2

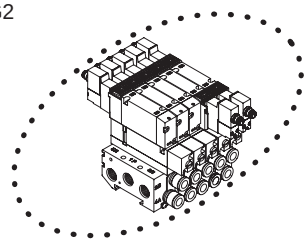

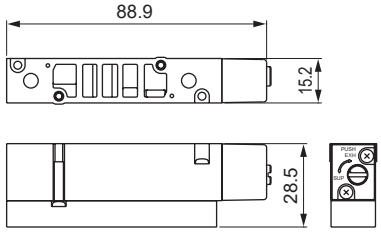

Dimensions when mounted

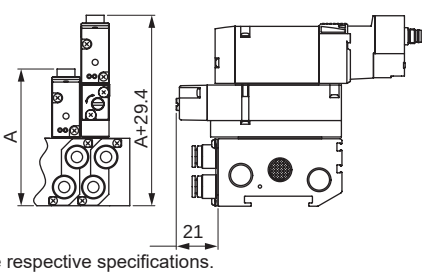

● 4G3

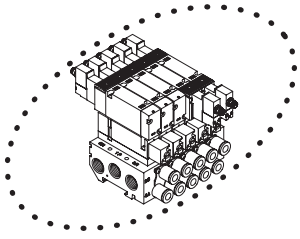

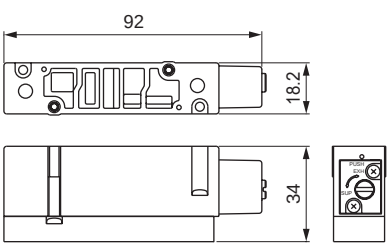

Dimensions when mounted

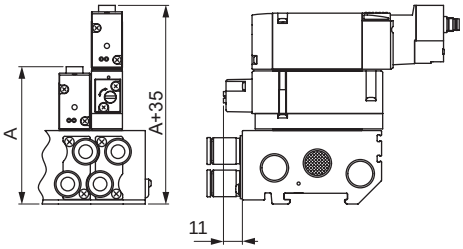

Note: For A dimensions, check the dimensions of the respective specifications.

Related products

● Air supply spacer

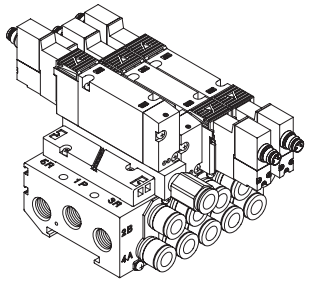

Specifications

Model No.	P→A/B		A/B→R		Weight g
	C[dm³/(s·bar)]	b	C[dm³/(s·bar)]	b	
4G1	0.70	0.23	0.93	0.16	8
4G2	1.6	0.17	1.8	0.16	35
4G3	2.6	0.22	3.1	0.14	56

*1: Values are with valve mounted.
*2: Effective cross-sectional area S and sonic conductance C are converted as S ≈ 5.0 x C.

How to order discrete units

● Air supply spacer

Air supply spacer model No.

4G 3 R - P - GWS10

Ⓐ Air supply spacer model No.

Ⓑ Port size
*1

Code	Description	Valve model No. 4G1	4G2	4G3
Ⓐ Air supply spacer model No.				
1	For 4G1	●		
2	For 4G2		●	
3	For 4G3			●
Ⓑ Port size				
Blank	M5 thread (4G1), Rc thread (4G2/4G3)	(1)	(2)	(3)
GWS4	ø4 fitting	●		
GWS6	ø6 fitting	●	●	
GWS8	ø8 fitting		●	●
GWS10	ø10 fitting			●

is not available.

Attachments: 2 mounting screws, 2 PR check valves, 1 body gasket

⚠ Precautions for model No. selection

*1: Blank indicates (1) M5, (2) Rc1/8, (3) Rc1/4.
*2: Specify the air supply spacer mounting position and quantity on the manifold specifications sheets in each catalog.
*3: Combination with the masking plate is not supported.
*4: 4G4 air supply spacers are made-to-order products. Contact CKD for details.

Related products

● Air supply spacer

Dimensions

● 4G1

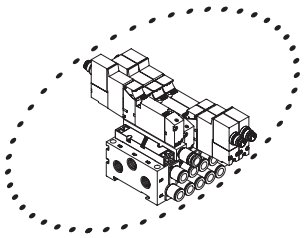

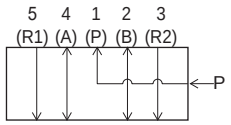

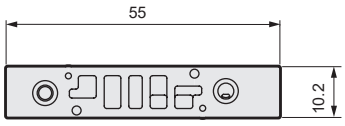



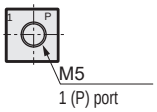

● 4G2

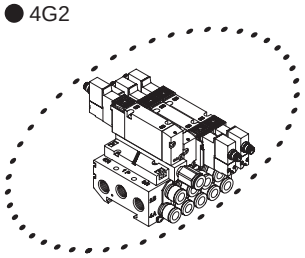

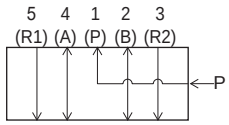

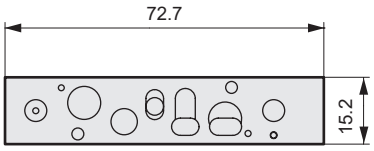



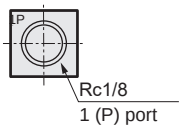

Dimensions when mounted

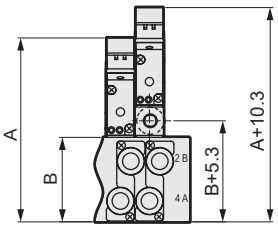

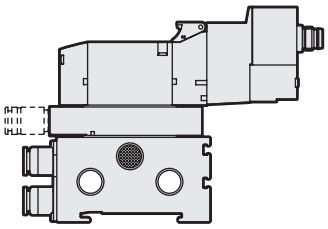

Dimensions when mounted

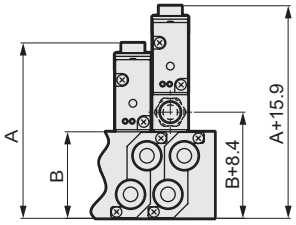

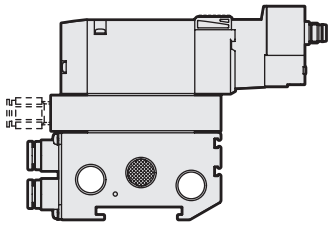

● 4G3

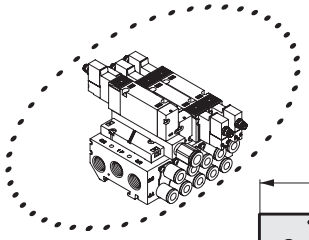

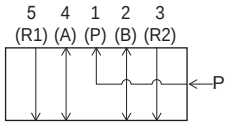

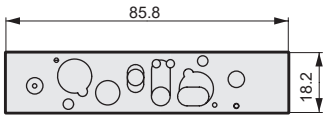





Dimensions when mounted

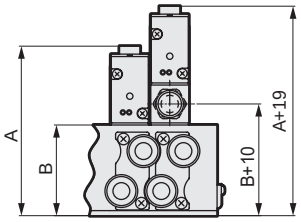

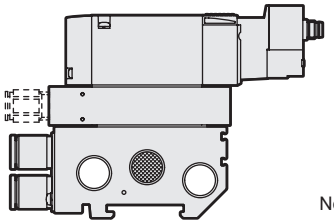

Note: For A and B dimensions, check the dimensions of the respective specifications.

Related products

● Exhaust spacer

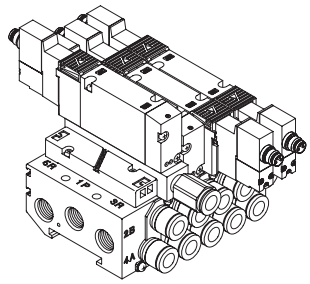

Specifications

Model No.	P→A/B		A/B→R		Weight g
	C[dm³/(s·bar)]	b	C[dm³/(s·bar)]	b	
4G1	0.94	0.28	0.68	0.33	7
4G2	1.5	0.24	1.9	0.24	34
4G3	3.4	0.21	2.9	0.27	58

*1: Values are with valve mounted.
*2: Effective cross-sectional area S and sonic conductance C are converted as S ≈ 5.0 x C.

How to order discrete units

● Exhaust spacer

Exhaust spacer model No.

4G 3 R - R - GWS10

Ⓐ Exhaust spacer model No.

Ⓑ Port size
*1

Code	Description	Valve model No. 4G1	4G2	4G3
Ⓐ Exhaust spacer model No.				
1	For 4G1	●		
2	For 4G2		●	
3	For 4G3			●
Ⓑ Port size				
Blank	M5 thread (4G1), Rc thread (4G2/4G3)	(1)	(2)	(3)
GWS4	ø4 fitting	●		
GWS6	ø6 fitting	●	●	
GWS8	ø8 fitting		●	●
GWS10	ø10 fitting			●

is not available.

Attachments: 2 mounting screws (*2), 2 PR check valves, 1 body gasket

⚠ Precautions for model No. selection

*1: Blank indicates (1) M5, (2) Rc1/8, (3) Rc1/4.
*2: Specify the exhaust spacer mounting position and quantity on the manifold specifications sheets in each catalog.
*3: Combination with the masking plate is not supported.
*4: 4G4 exhaust spacers are made-to-order products. Contact CKD for details.

Related products

● Exhaust spacer

Dimensions

● 4G1

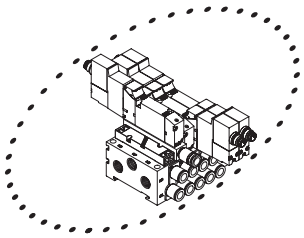

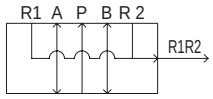

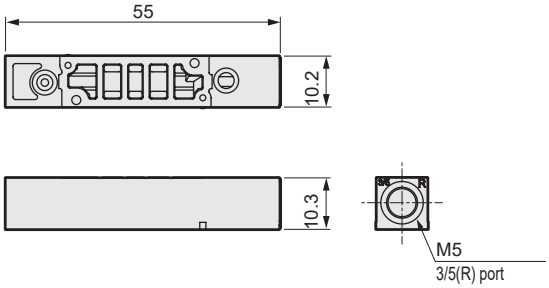

● 4G2

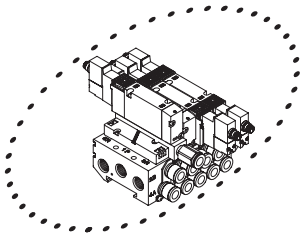

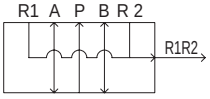

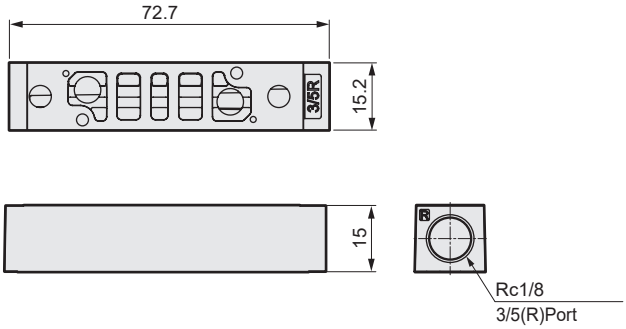

Dimensions when mounted

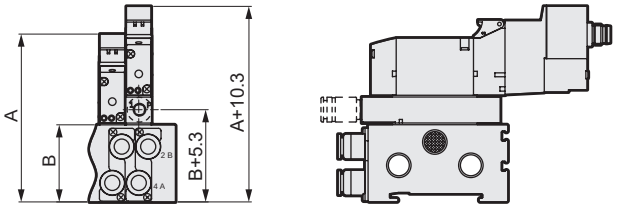

Dimensions when mounted

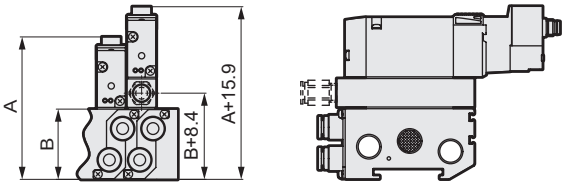

● 4G3

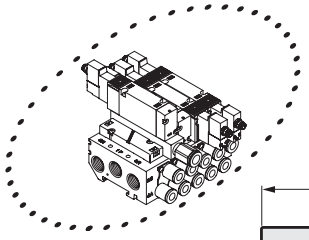

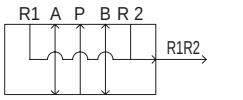

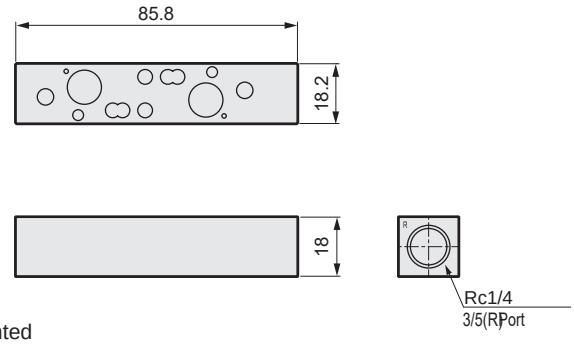

Dimensions when mounted

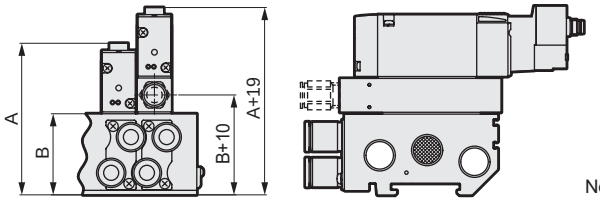

Note: For A and B dimensions, check the dimensions of the respective specifications.

Related products

● Silencer

● SLM-M5

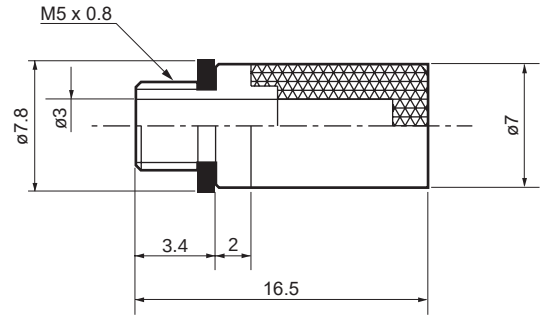

● SLW-6S, 8S

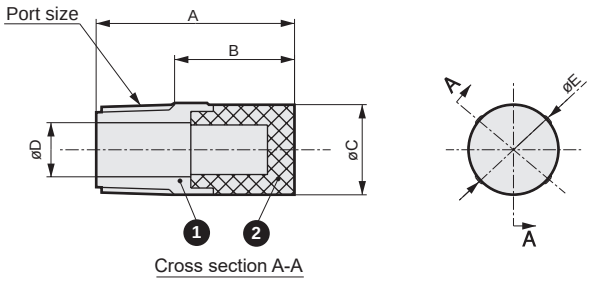

Model No.	Port size	A	B	C	D	E
SLW-6S	R1/8	22	13.3	10.5	6	10.5
SLW-8S	R1/4	28	19	14.8	9	15.4

● SLW-6A, 8A, 10A, 10L, 15A

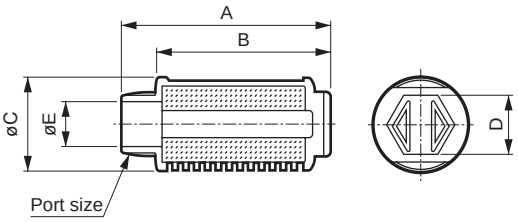

*1: Select the silencer mounting after confirming the dimensions.
*2: Use SLW-8S for the M4GD2 DIN rail mount. Interference occurs if SLW-8A is used.

Code / Model No.	Noise reduction effect dB (A)	Effective cross-sectional area mm²	A	B	C	D	E	Port size
SLW-6A	30 or more	10	34.5	28	16.5	10	7	R1/8
SLW-8A	30 or more	20	44.5	36	20	13	8.5	R1/4
SLW-10A	30 or more	30	58.5	48.5	25.5	17	12	R3/8
SLW-10L	30 or more	60	68.2	58.4	28	19	12	R3/8
SLW-15A	30 or more	75	71.4	58.4	28	19	15	R1/2

● Plug

Part name	Model No.	Compatible bore size	Appearance
Blanking plug	PG-P2-B	ø1.8	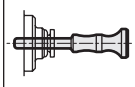
	GWP4-B	ø4	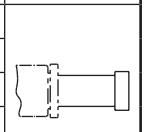
	GWP6-B	ø6	
	GWP8-B	ø8	
	GWP10-B	ø10	
	GWP12-B	ø12	
Threaded plug	4G1R-M5P	M5	 (FPL-M5)
	4G2R-06P	Rc1/8	 Hexagon socket plug
	4G3R-08P	Rc1/4	
	4G3R-10P	Rc3/8	
	4G4-15P	Rc1/2	

● DIN rail

N4GR-BAA **L2**

Rail length

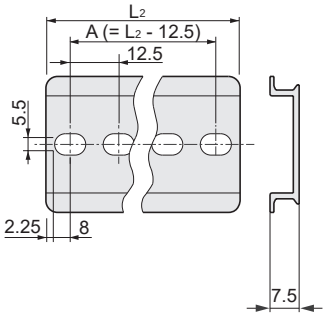

*1: Rail lengths not included in the list are made-to-order products.

L1: Manifold length		L2: Rail length	A: Mounting pitch
35	47.5 or less	87.5	75
Over 47.5	60 or less	100	87.5
60	72.5	112.5	100
72.5	85	125	112.5
85	97.5	137.5	125
97.5	110	150	137.5
110	122.5	162.5	150
122.5	135	175	162.5
135	147.5	187.5	175
147.5	160	200	187.5
160	172.5	212.5	200
172.5	185	225	212.5
185	197.5	237.5	225
197.5	210	250	237.5
210	222.5	262.5	250
222.5	235	275	262.5
235	247.5	287.5	275
247.5	260	300	287.5
260	272.5	312.5	300
272.5	285	325	312.5
285	297.5	337.5	325
297.5	310	350	337.5
310	322.5	362.5	350
322.5	335	375	362.5
335	347.5	387.5	375
347.5	360	400	387.5
360	372.5	412.5	400
372.5	385	425	412.5
385	397.5	437.5	425
397.5	410	450	437.5
410	422.5	462.5	450
422.5	435	475	462.5
435	447.5	487.5	475
447.5	460	500	487.5
460	472.5	512.5	500
472.5	485	525	512.5
485	497.5	537.5	525
497.5	510	550	537.5

If the length exceeds 510, calculate using a multiple of 12.5.

● Push-in fitting tube remover

For ø1.8/ø4 push-in fittings
4GR-EOT18-4

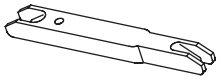

For ø4/ø6 push-in fittings
4GR-EOT4-6

Related parts

(1) Mounting plate (P) kit

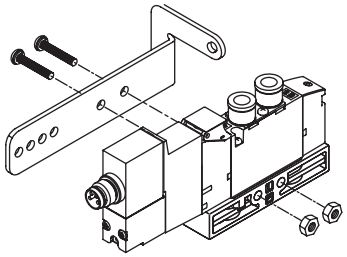

Mounting (P) kit

Model	Kit model No.	Set parts
4GD1	4G1R-MOUNT-PLATE-KIT	Mounting plate, 2 mounting screws, 2 nuts
4GD2	4G2R-MOUNT-PLATE-KIT	Mounting plate, 2 mounting screws
4GD3	4G3R-MOUNT-PLATE-KIT	Mounting plate, 2 mounting screws

(2) Single cartridge push-in fitting related part

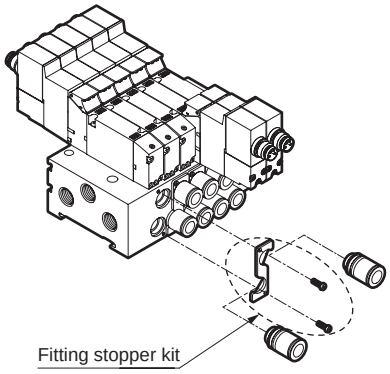

Fitting stopper plate kit

Model	Kit model No.
M4G1	4G1R-JNT-STP-PLATE-KIT
M4G2	4G2R-JNT-STP-PLATE-KIT
M4G3	4G3R-JNT-STP-PLATE-KIT
M4G4	4GB4-JNT-STP-PLATE-KIT

(3) M8 connector cable

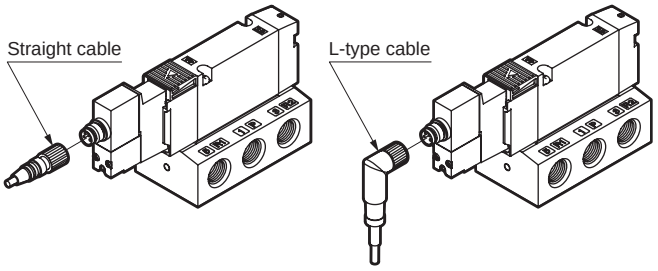

Straight cable (R1)　　L-type cable (R2)

4GEX - M8CC - R1 - 300
Ⓐ Direction Ⓑ Length

Ⓐ Direction	
R1	Straight cable
R2	L-type cable

Ⓑ Length	
300	Cable length 300 mm
500	Cable length 500 mm
1000	Cable length 1000 mm
3000	Cable length 3000 mm

◆ Cable Capacitance and Inductance

Type	Capacitance [nF/km] at 1 kHz	Inductance [mH/km] at 1 kHz
Straight	0.058	0.003
L type	0.125	0.003

Related parts

(3) Manifold related parts

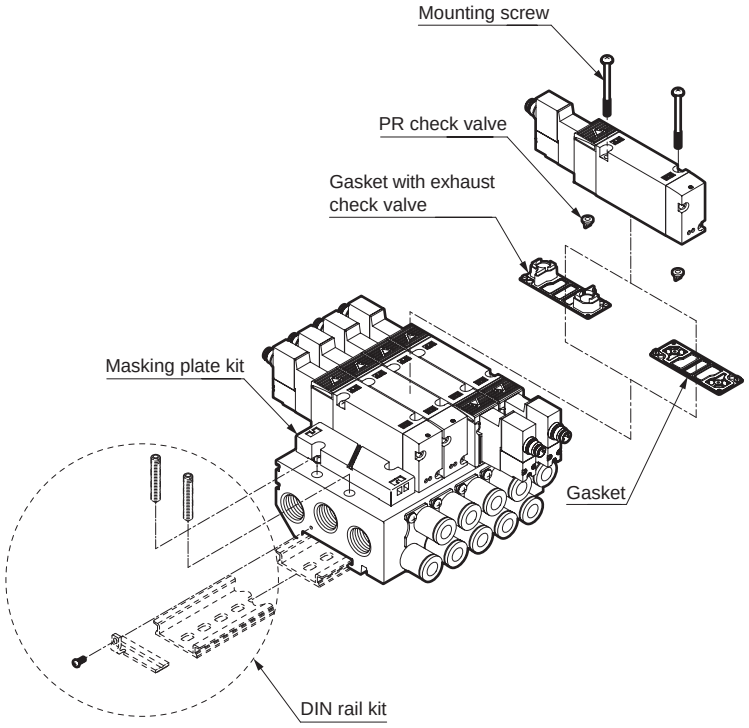

Masking plate kit

Model	Model No.	Description	Remarks
M3G1/M4G1	4G1R-MP	Masking plate Gasket 2 mounting screws	4G3/4G4 have two PR check valves included.
M3G2/M4G2	4G2R-MP		
M4G3	4G3R-MP		
M4GD4	4GA4-MP		
M4GE4	4GB4-MP		

Gasket

Model	Part model No.
3G1/4G1	4G1R-GASKET
3G1/4G1 (For masking plate)	4G1R-MP-GASKET
3G2/4G2	4G2R-GASKET
3G2/4G2 (For masking plate)	4G2R-MP-GASKET
4G3	4G3R-GASKET
4GD4	4GA4-GASKET
4GE4	4GB4-GASKET

Gasket with exhaust check valve

Model	Part model No.
3G1/4G1	4G1R-CHECK-VALVE
3G2/4G2	4G2R-CHECK-VALVE
4G3	4G3R-CHECK-VALVE

Note: 4G4 does not have a gasket with check valve.

PR check valve kit (2 per set)

Model	Kit model No.
3G1/4G1	4G1R-PR
3G2/4G2	4G2R-PR
4G3	4G3R-PR
4G4	4G4-PR

Mounting screw (10 per set)

Model	Part model No.
3G1/4G1	4G1R-SET-SCREW
3G2/4G2	4G2R-SET-SCREW
4G3	4G3R-SET-SCREW
4G4	4G4-SET-SCREW

DIN rail kit

Model	Model No.	Description
M4G1	4GA1R-BAA[Length]- D	DIN rail, 2 mounting screws 2 lock nuts
	4GB1R-BAA[Length]- D	
M4G2	4GA2R-BAA[Length]- D	2 DIN rails/holders 2 tapping screws, 4 mounting screws
	4GB2R-BAA[Length]- D	
M4G3	4GA3R-BAA[Length]- D	
	4GB3R-BAA[Length]- D	

Specify the length "0" when the DIN rail is not required.

Set the DIN rail length with reference to the current manifold dimensions.

Note: For 4G4, there is no DIN rail kit.

Related parts

(4) Sub-plate

How to order

● 4GD piping adapter

4G1 R-ADAPTOR-M5-○

Ⓐ Model No.

Code	Description	Ⓐ Model No. 3G1	3G2	4G1	4G2	4G3
Ⓑ **Port size (Port P/R1/R2)**						
M5	M5	●		●		
06	Rc1/8		●		●	
08	Rc1/4					●
Ⓒ **Option**						
P	With mounting plate (included)	●	●	●	●	●

is not available.

Note: For 4G4, there is no piping adapter.

● 4GE discrete sub-plate

4G1 R-SUB-BASE-06-○

Ⓐ Model No.

Code	Description	Ⓐ Model No. 3G1	3G2	4G1	4G2	4G3	4G4
Ⓑ **Port size (Port A/B/P/RI/R2)**							
06	Rc1/8	●		●			
08	Rc1/4		●		●	●	
10	Rc3/8					●	●
15	Rc1/2						●
Ⓒ **Option**							
F	Port A/B filter integrated *1	●	●	●	●	●	●

*1: A filter is built into port P as standard.

is not available.

Related parts

(5) Manifold sub-plate kit individual wiring

● M4GD sub-plate

M4GD1 R - 00 - 2

Ⓐ Model No.

Code	Description
Ⓐ Model No.	
M4GD1	Metal base, 4G1 size, body piping
M4GD2	Metal base, 4G2 size, body piping
M4GD3	Metal base, 4G3 size, body piping
M4GD4	Metal base, 4G4 size, body piping

Ⓓ Station No.	
2	2 stations
to	to
20	Refer to the specifications page for the max. station number.

● M4GE1 sub-plate

M4GE1R - C4 - ( ) D - 2

Ⓐ Port size
Ⓑ Option
Ⓒ Mounting
Ⓓ Station No.

Code	Description	
Ⓐ Port size		
Port	**4(A), 2(B) port**	**Port P/R1/R2**
C18	ø1.8 push-in fitting	Rc1/8
C4	ø4 push-in fitting	
C6	ø6 push-in fitting	
M5	M5	

Ⓑ Option	
Blank	
F	Port A/B filter integrated *1

Ⓒ Mounting	
Blank	Direct mount
D	DIN rail mount *2

Ⓓ Station No.	
2	2 stations
to	to
20	Refer to the specifications page for the max. station number.

*1: A filter is built into port P as standard.
*2: The DIN rail kit must be prepared separately.

(6) Manifold sub-plate kit individual wiring

● M4GE2/3 sub-plate

M4GE2 R - C4 - ( ) 2

Ⓐ Model No.
Ⓑ Port size
Ⓒ Option
Ⓓ Station No.

Code	Description	Ⓐ Model No.	
		M4GE2	M4GE3
Ⓑ Port size			
Port	**4(A), 2(B) port**	**Port P/R1/R2 (1) = Rc1/4 (2) = Rc3/8**	
C4	ø4 push-in fitting	(1)	
C6	ø6 push-in fitting	(1)	(2)
C8	ø8 push-in fitting	(1)	(2)
C10	ø10 push-in fitting		(2)
06	Rc1/8	(1)	
08	Rc1/4		(3)

Ⓒ Option	
Blank	
F	Port A/B filter integrated *1

Ⓓ Station No.	
2	2 stations
to	to
20	Refer to the specifications page for the max. station number.

*1: A filter is built into port P as standard.

Insulated explosion-proof barrier dimensions

Model No.: **D5048S**





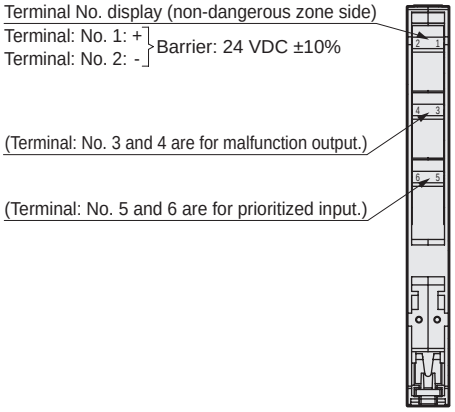

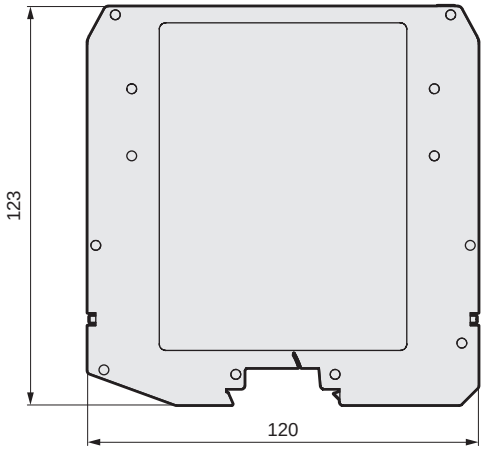

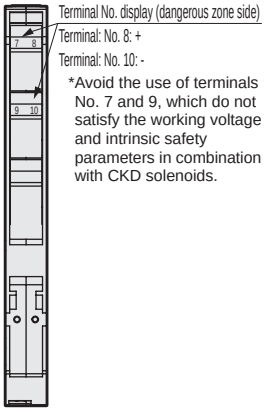

*Avoid the use of terminals No. 7 and 9, which do not satisfy the working voltage and intrinsic safety parameters in combination with CKD solenoids.

Barrier intrinsic safety parameters

Item	Between terminals No. 8-10
Intrinsic safety circuit max. voltage Uo	24.8 V
Intrinsic safety circuit max. current Io	108 mA
Intrinsic safety circuit max. power Po	667 mW
Intrinsic safety circuit allowable capacitance Co	0.113 µF
Intrinsic safety circuit allowable capacitance Lo	1.42 mH
Operating ambient temperature range	-40 to 70°C

Supply source: IDEC (G.M.I.)
Refer to the catalog of IDEC or G.M.I. for detailed specifications.

*1. Always use valves in combination with a barrier.
*2. Connection terminals are polarized. Take care to prevent incorrect wiring.
*3. Applicable wire cross section is 0.25 to 2.5 mm^2.
*4. Recommended terminal tightening torque is 0.5 to 0.6 N·m.
*5. Barrier degree of protection is IP20.

Valve and barrier connections

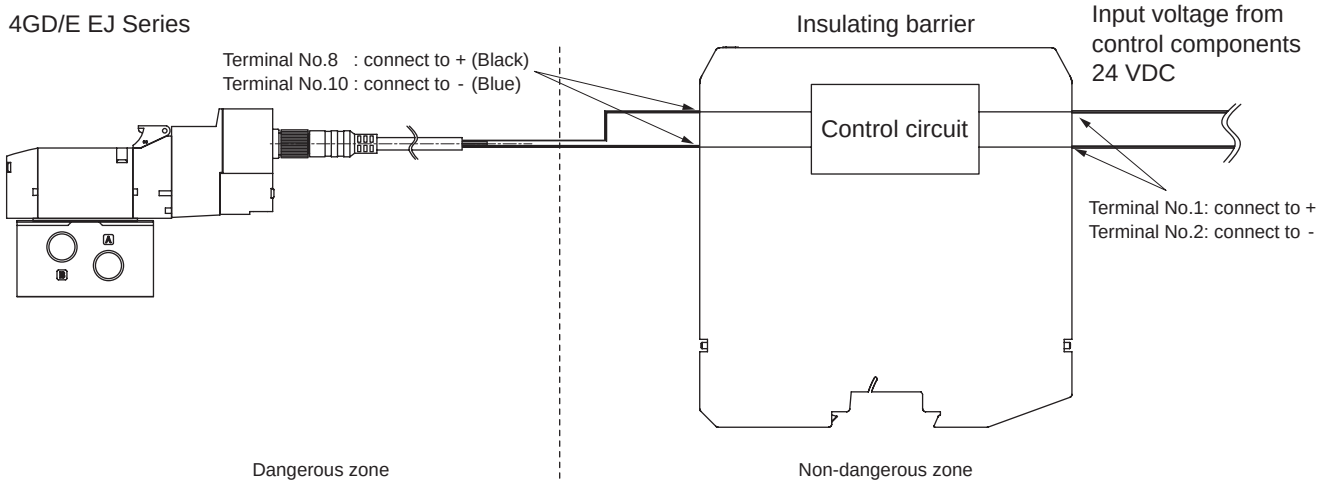

* Voltage equivalent to 12 VDC is supplied to the valve by way of the insulating barrier.

Zener barrier dimensions

Model No.: **Z728**



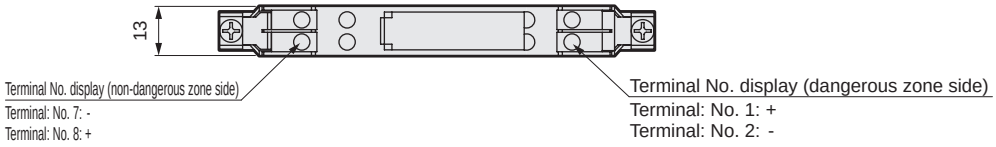

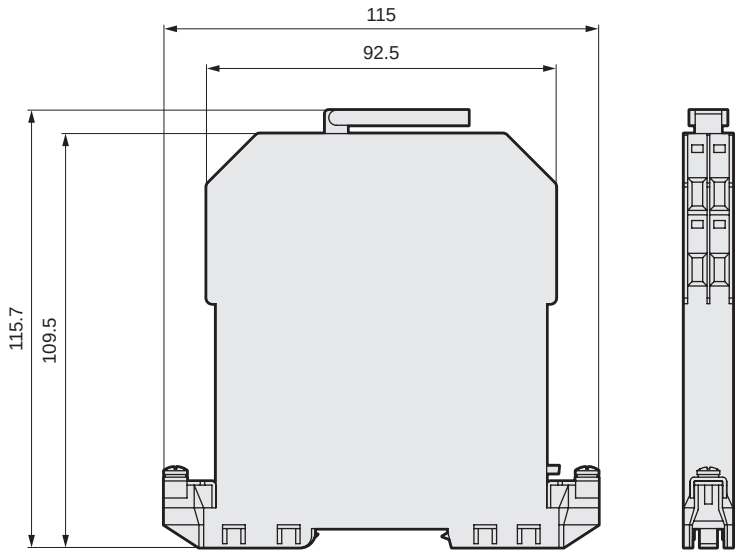

Supply source: Pepperl+Fuchs
Refer to the Pepperl+Fuchs catalog
for detailed specifications.

Barrier intrinsic safety parameters

Item	Description
Intrinsic safety circuit max. voltage Uo	28 V
Intrinsic safety circuit max. current Io	93 mA
Intrinsic safety circuit max. power Po	0.65 W
Intrinsic safety circuit allowable capacitance Co	0.083 µF
Intrinsic safety circuit allowable inductance Lo	3.05 mH
Operating ambient temperature range	-20 to 60°C
Current limiting resistor	300 Ω

* Always use valves in combination with a barrier.
* Connection terminals are polarized.
  Incorrect wiring can result in barrier failure.
* Compatible electrical wiring has an allowable area of 2.5 mm^2.
* Barrier degree of protection is IP20.
* Barrier installation requires A-type grounding (under 10 Ω).

Valve and barrier connections

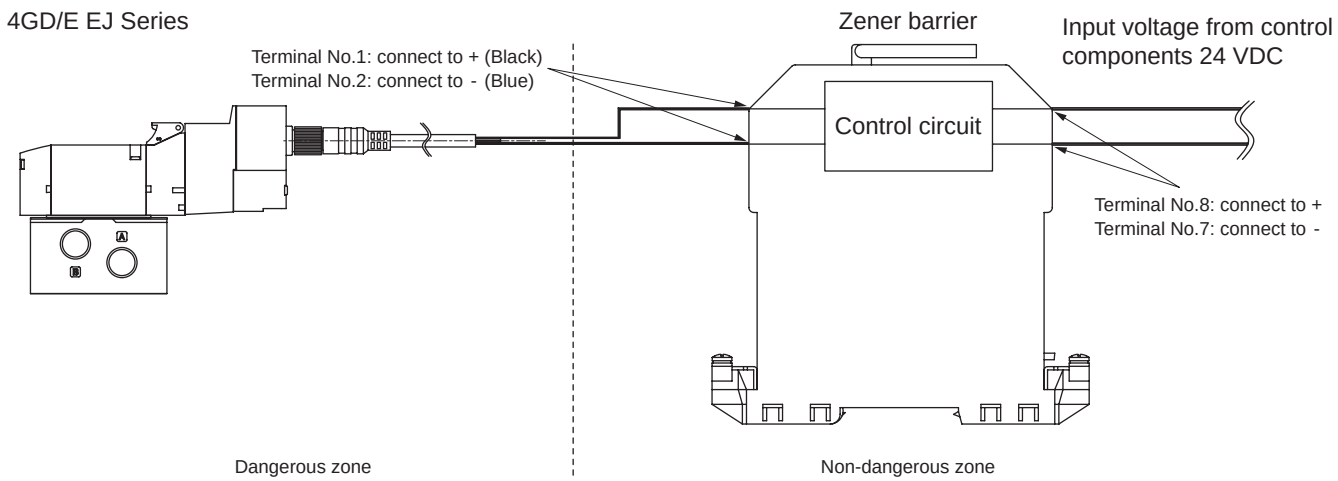

M4G$^{1}_{2}_{3}$ individual wiring

M4G$^{D}_{E}$ $^{1}_{2}_{3}$ Manifold specifications sheet

Date issued / /

Company

Contact

Order No.

● Contact ● Quantity set(s) ● Delivery date /

Slip No.	Order No.

● Manifold model No.

M□G$^{D}_{E}$□□0EJ-□-□□□-□-□

Solenoid valves | Solenoid position | Port size | Electrical connections | Other options | Mount type | Station No. | Voltage

Solenoid valve model No.	Fitting CX		Valve installation position																								Quantity
	A	B	1	2	3	4	5	6	7	8	9	10	11	12	13	14	15	16	17	18	19	20	21	22	23	24	
4G□□□9EJ-□																											
4G□□□9EJ-□																											
4G□□□9EJ-□																											
4G□□□9EJ-□																											
4G□□□9EJ-□																											
3G□□□9EJ-□																											
3G□□□9EJ-□																											
Masking plate 4G□R-MP-□																											
Air supply spacer 4G□R-P-□																											
In-stop valve spacer 4G□R-IS																											
Exhaust spacer 4G□R-R-□																											

Mounting rail

L_2= □□□
* Write an integer multiple of 12.5.

Included parts

Blanking plug										For M□G$^{D}_{E}$1□0EJ
GWP4-B □	GWP6-B □	GWP8-B □	GWP10-B □	Push-in fitting tube remover (included as standard) □ Not required (check the box)
Threaded plug				
4G1R-M5P □	4G2R-06P □	4G3R-08P □		
Silencer				
SLW-6S □	SLW-6A □	SLW-8S □	SLW-8A □	SLW-10S □	SLW-10A □

M4G4 individual wiring

M4G$^{D}_{E}$4 Manifold specifications sheet

Date issued / /

Company

Contact

Order No.

● Contact ● Quantity set(s) ● Delivery date /

Slip No.	Order No.

● Manifold model No.

M4G$^{D}_{E}$4 [ ] 0EJ- [ ] - [ ] [ ] [ ] - [ ] - [ ]

Solenoid position / Port size / Electrical connections / Option / Mount type / Station No. / Voltage

Solenoid valve model No.	Fitting CX A	Fitting CX B	Valve installation position 1	2	3	4	5	6	7	8	9	10	11	12	13	14	15	16	17	18	19	20	21	22	23	24	Quantity
4G [ ] 4 [ ] 9EJ- [ ]																											
4G [ ] 4 [ ] 9EJ- [ ]																											
4G [ ] 4 [ ] 9EJ- [ ]																											
4G [ ] 4 [ ] 9EJ- [ ]																											
4G [ ] 4 [ ] 9EJ- [ ]																											
Masking plate 4G [ ] 4-MP																											

Mounting rail	L_2= [ ] * Write an integer multiple of 12.5.	Included parts						
			Blanking plug					
			GWP8-B		GWP10-B		GWP12-B	
			Threaded plug					
			4G4-8 [ ] P		4G4-10 [ ] P		4G4-15 [ ] P	
			Silencer					
			SLW-6 [ ]		SLW-10 [ ]		SLW-15 [ ]	

Safety Precautions

Be sure to read this section before use.
For general valve precautions, refer to Intro Page 59.

Product-specific cautions: Pilot operated explosion-proof 3, 5-port valve 4G*/M4G*EJ Series

Design/selection

⚠ WARNING

- Usable in Class 1 and 2 danger zones (Zones 1 and 2) where there is combustible gas or steam. Cannot be used in Class 0 special danger zone.
- Explosion-proof performance is Exib II CT4 Gb. Select models and perform installation in accordance with JIS.C.60079 "Factory Explosion-Proof Guidelines for Users JNIOSH-TR-NO.44 (2012)".
- Use in combination with a barrier. Valves cannot be used independently in dangerous zones.
- The 4GD/E*EJ Series is only available for use within Japan.

⚠ CAUTION

- Explosive gas and explosion-proof structure

The degree of explosive gas danger is classified according to the group and temperature class. Gases with equivalent risk are grouped into one group, and explosion-proof structure standards are set for each group.
Codes to indicate the type, group and temperature class must be indicated in this order on the electrical components of explosion-proof structures. These codes indicate which group and temperature class the electrical components have been manufactured for, and which gases can be used.
For the example of explosion-proof solenoid valve of Exib II CT4 Gb:

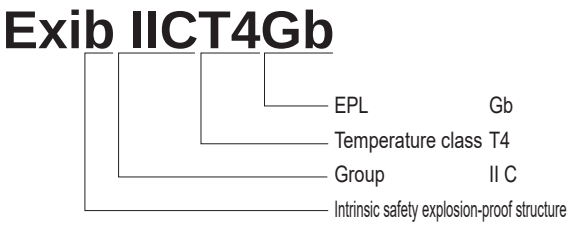

Table 2 indicates the classification of gases with a danger category of Group II C and temperature class T4 that are compatible with the product. Less dangerous gases are also listed that are guaranteed to be explosion-proof.
Temperature class refers to the degree of ignition risk, and is classified into six classes according to the ignition point. It defines the maximum surface temperature of the component corresponding to each class (Table 1).
Higher numbers indicate a higher risk that the gas will ignite at low igniting temperatures. Group refers to the risk of fire leaping to the exterior from small gaps. The level is classified into three grades according to the gap, and the codes shown in Table 1 are used. It can be said that this group expresses classification by the size of the explosive energy. Lower maximum safety clearance indicates more dangerous gases with higher explosive energy that can cause flames to pass through small gaps and leap to the exterior. EPL indicates the equipment protection level. Gb indicates equipment with a high protection level that can be used in Class 1 danger zones.

Table 1

Item	Code	Provision
Temperature class	T1	Max. surface temperature: 450°C
	T2	300°C
	T3	200°C
	T4	135°C
	T5	100°C
	T6	85°C
Group	II A	Max. safety clearance: 0.9 mm or more
	II B	Over 0.5 to less than 0.9
	II C	0.5 mm or less

Table 2

Temperature class / Group	T1	T2	T3	T4	T5
II A	Acetone Ammonia Carbon monoxide Ethane Acetic acid Ethyl acetate Toluene Propane Benzene Methanol Methane	Ethanol Isoamyl acetate Butane Acetic anhydride	Gasoline Hexane	Acetaldehyde	
II B		Ethylene Ethylene oxide		Ethyl ether	
II C	Hydrogen	Acetylene			Carbon disulfide

- Dangerous zones

Situations where explosive gases and air mix at a high enough level to cause an explosion or fire are called "dangerous zones". These zones are classified into Class 0 special danger zones, Class 1 danger zones and Class 2 danger zones according to the time and frequency at which the dangerous atmosphere is reached. The explosion-proof structure that can be used is determined according to these classes.

- Special danger zone (Zone 0) (4GD/E*EJ Series cannot be used)

Zones where a dangerous atmosphere is or could be continuously generated, and where the concentration of explosive gas is maintained continuously or for long periods above the lower limit for explosions.

Example a: The open space above a flammable liquid inside a container or tank.
b: Inside a combustible gas container or tank.
c: Near flammable liquid in an open container.

- Class 1 special danger zone (Zone 1)

(1) Zones where explosive gas could accumulate to a dangerous concentration during operations such as lid opening/closing to remove the product, operation of the safety valve, etc.
(2) Zones where explosive gases are likely to accumulate to dangerous concentrations during repair or maintenance or due to leakage, etc.

- Class 2 special danger zone (Zone 2)

(1) Zones where combustible gases or flammable liquids are regularly handled, but where the gases and liquids are sealed in a vessel or equipment, and where the gases and liquids could leak to dangerous concentrations only if the vessel or equipment breaks by accident or due to misoperation.

1. Prohibition of disassembly and modification

⚠ WARNING

- Disassembly of pilot valves or barriers not only leads to the risk of decreased explosion-proof performances but may also cause accidents.

Accordingly, customers are asked not to disassemble or modify their units.

2. Intrinsic safety explosion-proof circuit wiring

⚠ WARNING

- The intrinsic safety explosion-proof circuit wiring should not be mixed with other circuitry, nor should it be installed so as to be affected by static induction or electromagnetic induction from other circuits.

Connection conditions for intrinsic safety-related components (safety retainer, barrier) and intrinsic safety components (4G EJ Series) must satisfy the explosion-proof specifications below, as well as the safety retention ratings and parameters.

Intrinsic safety components	Combination conditions	Intrinsic safety-related components
Explosion-proof structure and category: ia, ib, ic	≤	Explosion-proof structure and category: ia, ib, ic
Electrical component group: IIA, IIB, IIC	≤	Electrical component group: IIA, IIB, IIC
Ui: Intrinsic safety circuit allowable voltage (max. applicable voltage)	≥	Uo: Max. voltage (max. output voltage)
Ii: Intrinsic safety circuit allowable current (max. applicable current)	≥	Io: Max. current (max. output current)
Pi: Intrinsic safety circuit allowable power (max. input power)	≥	Po: Max. power (max. output power)
Ci + Cw Ci: Intrinsic safety component internal capacitance Cw: Intrinsic safety circuit wiring max. capacitance	≤	Co: Allowable capacitance (maximum connectable capacitance)
Li + Lw Li: Intrinsic safety component internal inductance Lw: Intrinsic safety circuit wiring max. inductance	≤	Lo: Allowable inductance (maximum connectable inductance)

The length of the intrinsic safety circuit external wiring can be calculated using the method below, in accordance with the above connection conditions.
Wiring capacitance and inductance is Co ≥ Ci + Cw, and Lo ≥ Li + Lw.
The allowable wiring length is at or less than the value of either (Co-Ci)/Cc or (Lo-Li)/Lc, whichever is smaller.
Cc: Capacitance per unit length, Lc: Inductance per unit length

3. When using the product in combination with low friction cylinders

■ Malfunctions could occur because of the exhaust pressure. Contact CKD.

4. Degree of protection IP67

■ Note that while the 4GD/E*EJ Series supports IP67 as standard, so that the unit is protected from dust and water, it cannot be used immersed in water. Countermeasures such as a protective cover for the unit should also be taken if using in environments where it will be constantly exposed to dust or water.
■ Barrier D5048S degree of protection is IP20.

5. Exhaust check valve

CAUTION: The exhaust check valve is a check valve.If the cylinder rod is manually operated directly without pressurization, the check valve opens and the air flow is shut off, preventing cylinder rod adjustment.

Generally, the double acting cylinder connected at the manifold to direct acting cylinders or ABR connection valves may malfunction when adversely affected by the exhaust pressure led in by operation of other cylinders. For the manifold of 4G Series, the "exhaust check valve" integrated to prevent this malfunction can be selected, except for all ports closed valves and PAB connection valves. However, with components that are affected by a small amount of leakage or pressure of low friction cylinders, etc., the functions may not operate properly. Moreover, 4G4 is not compatible with check valves.

Example of pneumatic pressure system that may malfunction

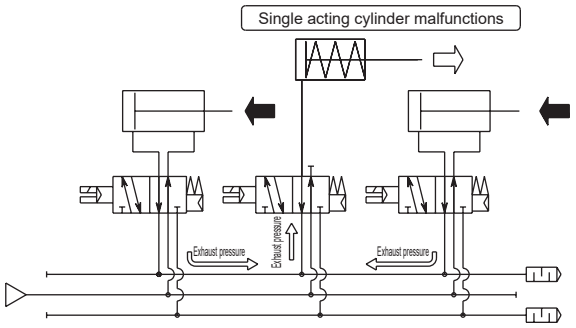

4G Series pneumatic pressure system

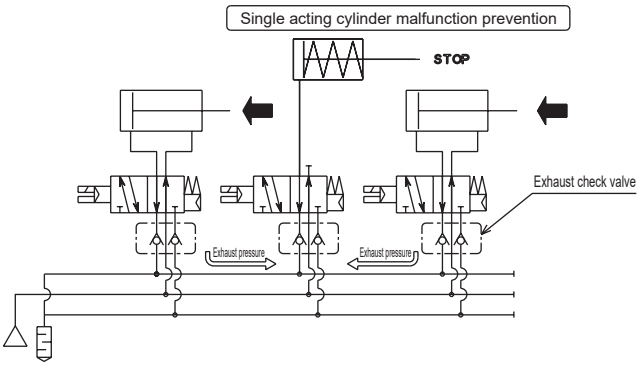

Internal structure

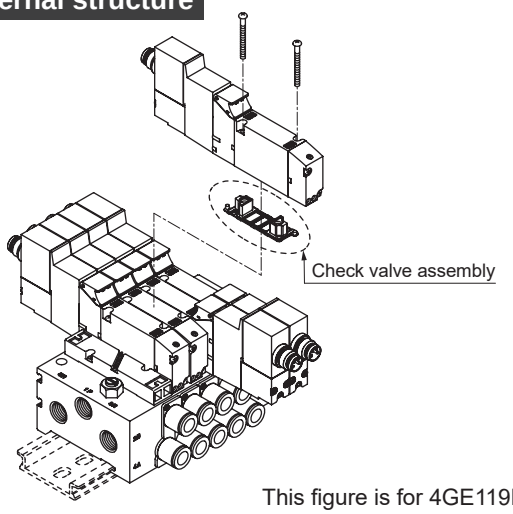

This figure is for 4GE119R

Standard specifications of check valve

Model No.	Flow path switching	Option (H) selection
3G$^{D}_{E}$*669EJ	Two 3-port valves integrated NC/NC	Yes
4G$^{D}_{E}$*19EJ	2-position single	Yes
4G$^{D}_{E}$*29EJ	2-position double	Yes
4G$^{D}_{E}$*39EJ	3-position all ports closed	No
4G$^{D}_{E}$*49EJ	3-position ABR connection	Yes
4G$^{D}_{E}$*59EJ	3-position PAB connection	No

Note: Because 3-position all ports closed type and PAB connection type are not adversely affected by the exhaust pressure led in from other cylinders at the neutral position, installation of a check valve is not required.

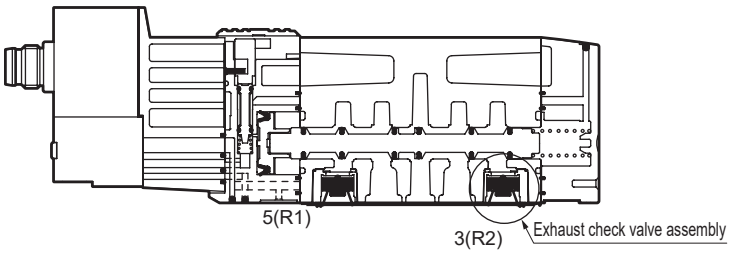

Mounting, installation and adjustment

1. Body piping (D) single installation method

⚠CAUTION

■ When directly installing the manifold

● The discrete body piping 4GD Series can be installed using the (a) through hole or (b) screw hole. When using the screw holes, be careful of the tightening torque.

Screw hole Tightening torque 0.7 to 1.2 N·m

4GD1 Series
(a) 2 through holes

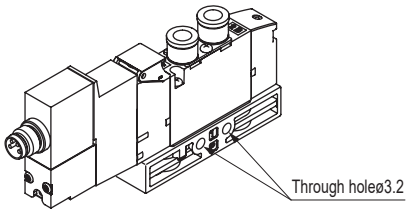

4GD2 Series
(a)Through hole
(b) 4 common screw holes

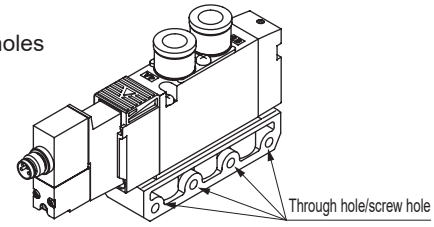

4GD3 Series
(a)Through hole
(b)2 places each, dedicated for screws

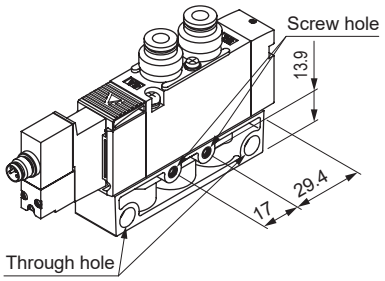

4GD4 Series
(a) 2 through holes

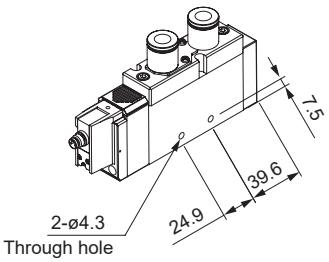

Mounting hole shape

	4GD2	4GD3	
	(a) (b) Common use	(a) Through hole	(b) Screw hole
Sectional view of mounting hole	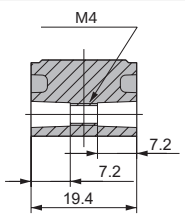	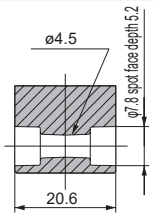	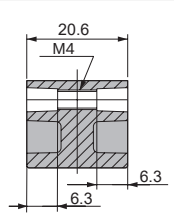

■ Mounting plate(P)

● Be careful of the mounting direction and orientation, as damage may result from incorrect mounting of body piping single mounting plate (P).

■ How to mount mounting plate (P)

4GD1

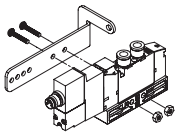

4GD2

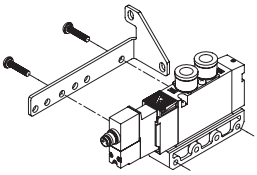

4GD3

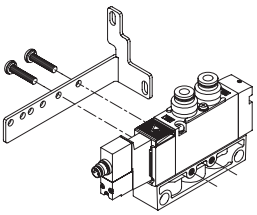

Mounting plate (P) kit

	Kit model No.	Set parts
4GD1	4G1R-MOUNT-PLATE-KIT	Mounting plate, mounting screw 2, nut 2
4GD2	4G2R-MOUNT-PLATE-KIT	Mounting plate, mounting screw 2
4GD3	4G3R-MOUNT-PLATE-KIT	Mounting plate, mounting screw 2

* Mounting plate is compatible only with single type. Moreover, 4G4 is not compatible.

2. How to install manifold (Metal base 4G$^{D}_{E}$Series)

⚠CAUTION

■ When directly installing the manifold

● For installation of the M4G2/3 Series, there are 2 methods of tightening the manifolds with bolts: after passing them through the upper side of the manifold base or after inserting them from the back side.
When using a female thread as shown in the table below, check the thread depth, select a mounting bolt with 10 screw-in threads or more, and be careful with the tightening torque. The screw could be damaged if incorrectly installed.

Installation method
M4G2/3 Series

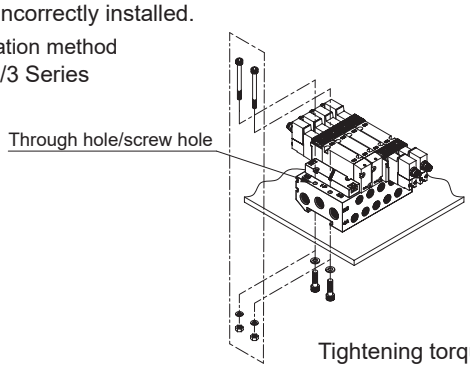

Tightening torque
1 to 1.5 N·m

Mounting, installation and adjustment

M4G4 Series

- For installation of M4G□4 Series, tighten the manifold with bolts after passing them through the upper side of the manifold base.

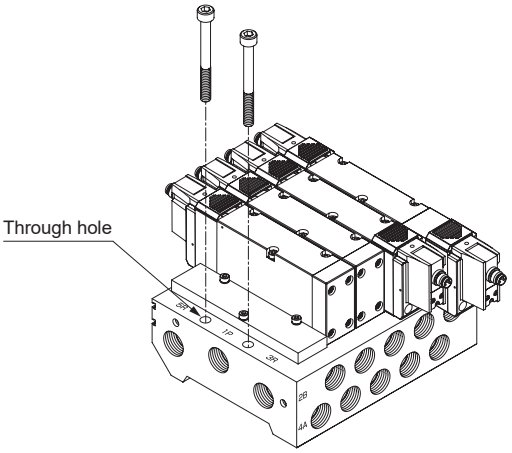

Mounting hole shape (sectional view)

	Standard manifold	
	M4GD (body piping)	M4GE (Base piping)
M4G2	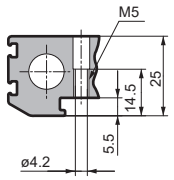	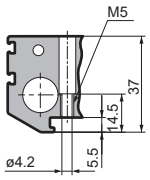
M4G3	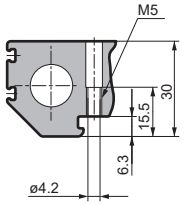	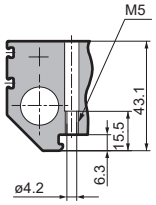

■When installing the manifold with DIN rail

M4G1, 2, 3

- The direct mounting specification manifold can be changed to DIN rail mounting specification for use.Note that inappropriate mounting may result in falling off and damage of the manifold. If the manifold weighs more than 1 kg, or when using in an environment with vibration or impact, fix the DIN rail onto the surface at 50 to 100 mm intervals, and confirm that there is no problem with installation before starting operation. Use the individual specifications to calculate the weight.
  (CAUTION: Only the M4GE1 (page 53) is provided with dedicated bases for direct mounting or DIN rail mounting. For mounting type, direct mount cannot be changed to DIN rail mounting, but the DIN rail mounting type can be direct mounted.)
  The upper limit of station No. for DIN rail mounting is 16.

■How to mount DIN rail

- Only the M4GE1 Series is provided with dedicated bases for direct mounting or DIN rail mounting. Direct mounting cannot be changed to DIN rail mounting, but the DIN rail mounting type can be direct mounted.)

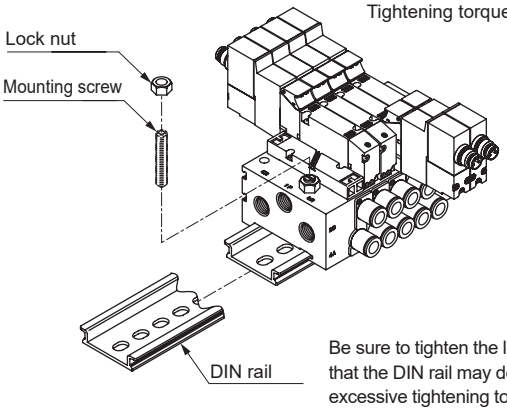

Be sure to tighten the lock nut. Note that the DIN rail may deform if excessive tightening torque is applied.

Mounting hole shape (sectional view)

M4GD1 M4GE1 (DIN rail mount)	M4GE1 (Direct mount)
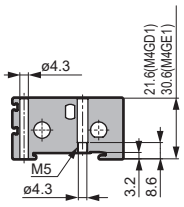	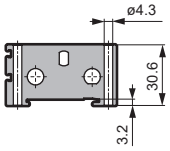

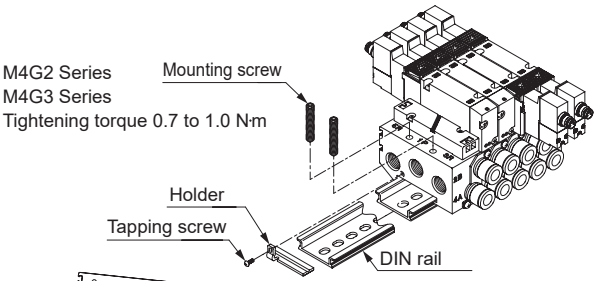

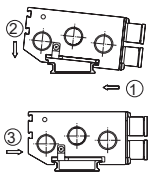

1. Attach the holder (secure with bolts to prevent falling off)
2. Temporarily set the mounting screw
3. Engage the fingers with the DIN rail in order from ① to ②.
4. Push in the direction of ③.
5. Tighten the mounting screws.

DIN rail kit

	Model No.	Description
M4G1	4GA1R-BAA length -D	DIN rail, 2 mounting screws, 2 lock nuts
	4GB1R-BAA length -D	
M4G2	4GA2R-BAA length -D	2 DIN rails/holders, 2 tapping screws, 4 mounting screws
	4GB2R-BAA length -D	
M4G3	4GA3R-BAA length -D	
	4GB3R-BAA length -D	

Specify the length "0" when the DIN rail is not required.

Set the DIN rail length with reference to the current manifold dimensions.

Mounting, installation and adjustment

3. Port filter

⚠CAUTION

■ The port filter prevents the entry of foreign matter, and prevents problems from occurring in the valve. This product does not improve compressed air quality. Read the warnings and precautions on Intro Page 59 and then mount, install, and adjust accordingly.
Do not detach or press down the port filter forcibly. The filter could deform, causing problems. If contaminants and foreign matter are found on the filter surface, blow them off lightly with air, or remove them with tweezers, etc.

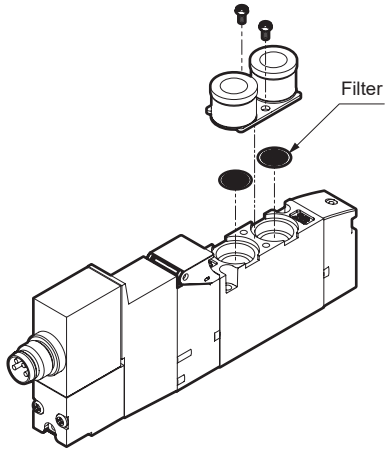

Example of A/B port filter option combination

M4G Series

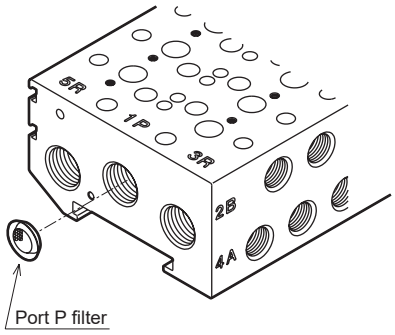

Port P filter (standard) example of embedding

4. M8 connector cable

M8 connector tightening torque is 0.38 to 0.42 N·m. The degree of protection (IP67) will not be upheld if not tightened to the appropriate torque.

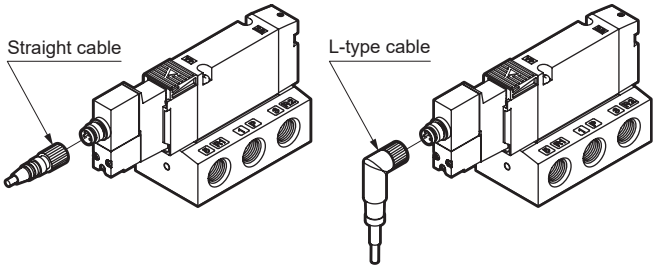

Straight cable L-type cable

Wire the included M8 connector cable as below.
· Black : 12 V
· Blue : 0 V
· Brown and white : Not used.

Be careful as the solenoid has polarity.

Use/maintenance

1. Continuous energizing

⚠CAUTION

■If a valve is used in a continuously energized state for long periods, the valve performance may deteriorate more quickly.
Furthermore, use caution under the following working conditions likewise.

- When the energized time exceeds non-energized time in intermittent operation
- When one energizing session exceeds 30 minutes in intermittent operation

Give sufficient consideration to heat dissipation when installing the product.

2. Manual override

⚠WARNING

■The 4G Series is an internal pilot solenoid valve. If air is not supplied to port P, the main valve will not be switched even if the manual override is operated.

■A manual protection cover is provided as standard. The manual protection cover is closed when shipped. Therefore, the manual override device cannot be seen when delivered. Open the protective cover to operate the manual override.
Note that the protective cover will not close unless the locking manual override is released.

■Manual override is used for both non-locking and locking. Holding down and turning the button locks the valve. For locking, be sure to press down and turn. If manual override is turned without being pressed down, it could be damaged or air could leak.

■Opening and closing the manual protection cover
Do not excessively force the manual protection cover when opening and closing it. Excessive external force could cause failures. (Below 5 N)

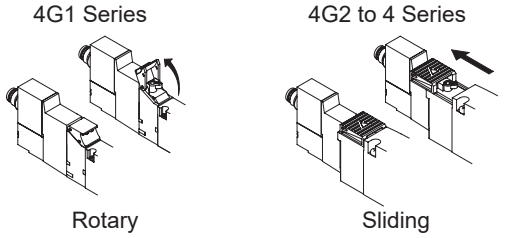

■How to operate manual override

- Push non-locking operation
  Push straight in the direction of the arrow until it stops.
  Release to cancel.

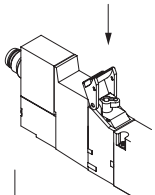

- Push locking operation
  Push and hold the button and turn it 90° in the direction of the arrow.
  The function is not canceled even when the button is released.

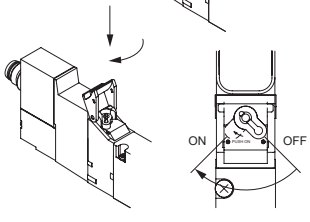

■When conducting manual operations, make sure that there are no people near the operating cylinder.

3. How to replace cartridge fitting

⚠CAUTION

■Check procedures before changing the push-in fitting size. If installed incorrectly, or if the tightening of the mounting screw is insufficient, air leakage could occur.

■Body piping (D)
4G1, 2, 3

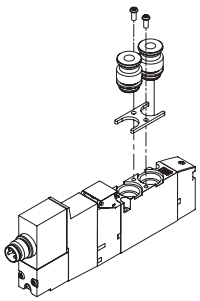

(1) Remove the mounting screw.
(2) Pull out the stopper plate and fitting together.
(3) Align the groove of the replacement fitting with the stopper plate and assemble them temporarily.
(4) Assemble the stopper plate with the fitting, and tighten the mounting screw. Pull on the fitting to confirm that it is properly installed.

	Size	Tightening torque (N·m)
4G1	M1.7	0.18 to 0.22
4G2	M2.5	0.25 to 0.30
4G3	M3	0.6 to 0.7
4G4	M3	0.6 to 0.7

4G4

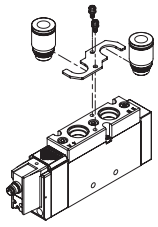

■Base piping (E)

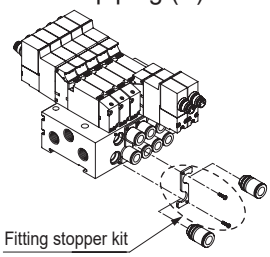

(1) Remove the mounting screw.
(2) Pull out the stopper plate and fitting together.
(3) Align the groove of the replacement fitting with the stopper plate and assemble them temporarily.
(4) Assemble the stopper plate with the fitting, and tighten the mounting screw. Pull on the fitting to confirm that it is properly installed.

Model No. of cartridge push-in fitting

Model	Part name	Model No.
4G1	ø1.8 straight	4G1R-JOINT-C18
	ø4 straight	4G1R-JOINT-C4
	ø6 straight	4G1R-JOINT-C6
	Plug cartridge	4G1R-JOINT-CPG
4G2	ø4 straight	4G2R-JOINT-C4
	ø6 straight	4G2R-JOINT-C6
	ø8 straight	4G2R-JOINT-C8
	Plug cartridge	4G2R-JOINT-CPG
4G3	ø6 straight	4G3R-JOINT-C6
	ø8 straight	4G3R-JOINT-C8
	ø10 straight	4G3R-JOINT-C10
	Plug cartridge	4G3R-JOINT-CPG
4G4	ø8 straight	4G4-JOINT-C8
	ø10 straight	4G4-JOINT-C10
	ø12 straight	4G4-JOINT-C12

MEMO

4F**0EX
Valve

Pilot operated explosion-proof 5-port valve

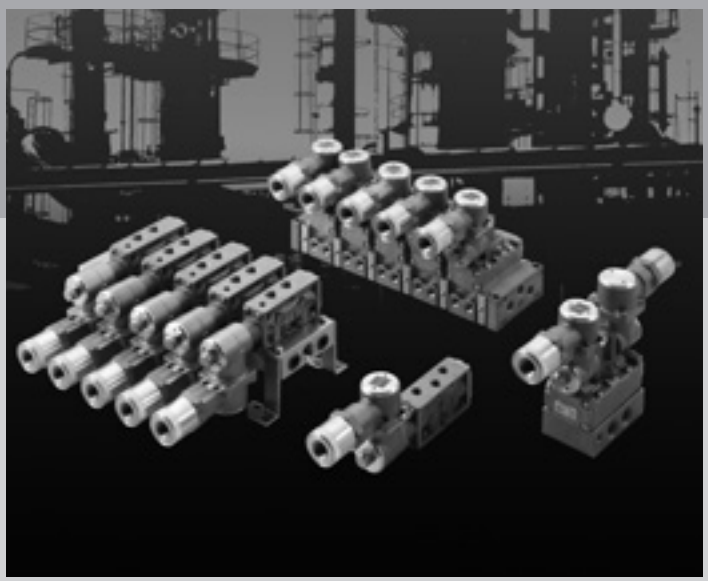

Overview

·Supports safe use in dangerous atmospheres
·Compliant with IEC standards

Features

Compliant with international explosion-proof guidelines

Pressure and explosion proof construction Ex d II B T4 (group II B/temperature class T4)
Japan Certification test model qualification No. (TIIS)
No. TC20523
Korea Conformity Certificate No. (KOSHA)15-AV4BO-0389
Taiwan Conformity Certificate No. (ITRI)
Industrial Electricity (2015)
No. 00216X
China Conformity Certificate No. (CCC)
2020322307002070
China explosion-proof standard NEPSI acquired
GYB20.2251X

Compatible with outdoor use

Degree of protection
IP65(Dust proof/jet proof)
(Not explosion-proof test certification)

Selectable cable diameter range expanded

Lineup of ø7.5 to 13.5

CONTENTS

Series variation	1780
Discrete valve	
● Body piping (4F3*0EX)	1782
● Sub-plate piping (4F4 to 7*0EX)	1782
● Body piping NAMUR standard option (4F3*0EX)	1792
Individual wiring manifold	
● Body piping (M4F3*0EX)	1794
● Sub-plate piping (M4F4 to 7*0EX)	1794
Manifold specifications sheet	1802
⚠Safety precautions	1804

Series external appearance			Model No.	Position Number of solenoids JIS symbol	Flow characteristics: C [dm³/(s·bar)] *1	Flow characteristics: Effective cross-sectional area S (mm²)	Applicable cylinder bore size	
Single unit	4F**OEX 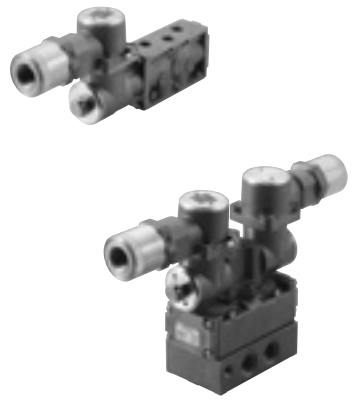	Direct	4F3*0EX	● 2-position/single 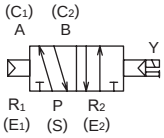	3.9 to 5.8	-	ø63 to ø100	
		Sub-plate	4F4*0EX		5.0 to 5.3	-	ø63 to ø100	
			4F5*0EX	● 2-position/double 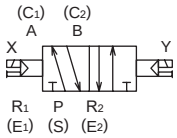	9.7 to 10	-	ø80 to ø160	
			4F6*0EX		15 to 18	-	ø140 to ø200	
			4F7*0EX	● 3-position/all ports closed 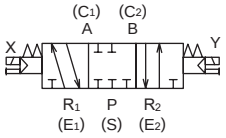	-	160	ø180 to ø250	
Manifold	M4F**OEX 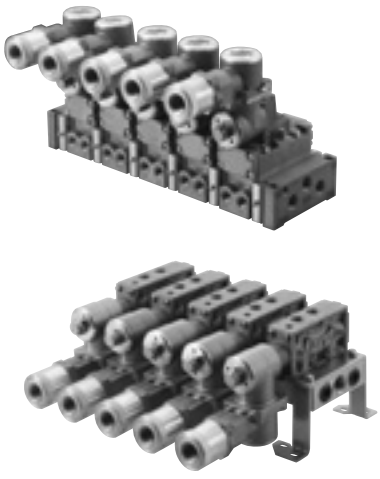	Direct	M4F3*0EX		3.9 to 5.8	-	ø63 to ø100	
		Sub-plate	M4F4*0EX	● 3-position/ABR connection 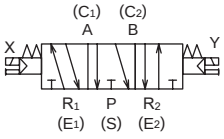	5.0 to 5.3	-	ø63 to ø100	
			M4F5*0EX		9.7 to 10	-	ø80 to ø160	
			M4F6*0EX	● 3-position/PAB connection 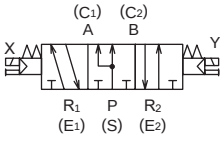	15 to 18	-	ø140 to ø200	
			M4F7*0EX		-	160	ø180 to ø250	

*1 : Effective cross-sectional area S and sonic conductance C are converted as S ≈ 5.0 x C.

	Switching position						Port size of A/B port						External wire pull	Thermal class	Page
							Female thread								
	2-position single	2-position double	3-position all ports closed	3-position A/B/R connection	3-position P/A/B connection	Mix	Rp1/4	Rp3/8	Rc1/4	Rc3/8	Rc1/2	Rc3/4	Pressure-proof packing protection pipe screw-in	H	
	●	●	●	●	●		●	●					●	●	1782
	●	●	●	●	●				●	●			●	●	
	●	●	●	●	●					●	●		●	●	
	●	●	●	●	●						●	●	●	●	
	●	●	●	●	●							●	●	●	
	●	●	●	●	●	●	●	●					●	●	1794
	●	●	●	●	●	●			●				●	●	
	●	●	●	●	●	●				●			●	●	
	●	●	●	●	●	●					●		●	●	
	●	●	●	●	●	●						●	●	●	

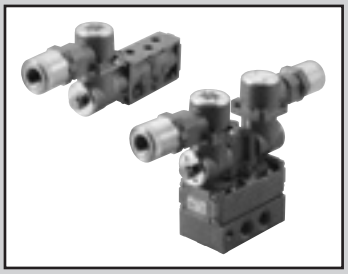

Discrete valve
Pilot operated explosion-proof 5-port valve pneumatic valve

4F**0EX Series

- Pressure and explosion proof construction ExdIIBT4 (group IIB/temperature class T4)
- Japan Conformity Certificate No. TC20523
- Korea Conformity Certificate No. 15-AV4BO-0389
- Taiwan Conformity Certificate No. ITRI (2015) No. 00216X
- China Conformity Certificate No. (CCC) 2020322307002070
- China explosion-proof type (NEPSI) GYB20.2251X
- Cylinder bore size: ø63 to ø250

RoHS CAD

JIS symbol

2-position/single

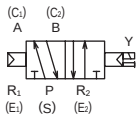

2-position/double

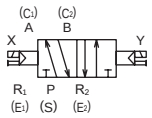

3-position/all ports closed

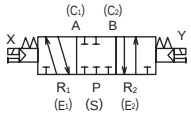

3-position/ABR connection

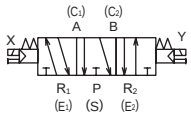

3-position/PAB connection

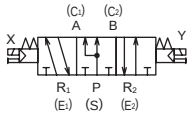

Common specifications

Item	Description
Valve and operation	Pilot operated soft spool valve
Working fluid	Compressed air
Max. working pressure MPa	1.0
Min. working pressure MPa	Refer to Individual specifications listed below
Proof pressure MPa	1.5
Ambient temperature °C (*1)	-10 to 60(no freezing)
Fluid temperature °C	5 to 60
Lubrication	Not required (use turbine oil ISO VG32 if necessary for lubrication)
Explosion-proof performance (*2)	ExdIIBT4X
Manual override	Locking
Vibration resistance m/s^2	50 or less
Shock resistance m/s^2	300 or less
Atmosphere	Cannot be used in corrosive gas environment.

*1:The ambient temperature indicates the temperature for storage and upon installation, which will differ from the fluid temperature during operation.
*2:The display of "X" for explosion-proof performance Exd IIB T4X, with "A2-70 bolt strength category (bolts used in actuator assembly only)" and "allowable cable temperature of 85°C or more" has been omitted.
*X is not indicated on the certification by regulations.

Electrical specifications

Item			Description
Rated voltage	AC		100V,200V,110V,220V(50/60Hz)
	DC		24V,12V
Rated voltage fluctuation range			±10%
Starting current A	AC	100V	0.186/0.135
		200V	0.093/0.068
		110V	0.169/0.123
		220V	0.085/0.061
	DC	24V	0.166
		12V	0.332
Holding current A	AC	100V	0.06/0.05
		200V	0.03/0.025
		110V	0.055/0.045
		220V	0.027/0.023
	DC	24V	0.166
		12V	0.332
Power consumption W	AC	100V	4.5/4
		200V	4.5/4
		110V	4.5/4
		220V	4.5/4
	DC	24V	4
		12V	4
Thermal class			H

Individual specifications

Item			4F3	4F4	4F5	4F6	4F7
Min. working pressure MPa	2-position	Single	0.1	0.1	0.1	0.15	0.15
		Double					
	3-position	All ports closed	0.15	0.15	0.15		
		A/B/R connection					
		P/A/B connection					
Port size *1	Air supply port S, cylinder port C		Rp1/4,Rp3/8	Rc1/4,Rc3/8	Rc3/8,Rc1/2	Rc1/2,Rc3/4	Rc3/4,Rc1
	Exhaust port E		Rp1/4,Rp3/8	Rc1/4,Rc3/8	Rc3/8,Rc1/2	Rc1/2,Rc3/4	Rc3/4,Rc1
	Pilot exhaust port (PE)		(Rp1/8)	(Rc1/8)	(Rc1/8)	(Rc1/4)	(Rc1/4)

*1: NPT threads can also be used for 4F3 to 7 piping ports. Contact CKD for details.
(However, the external wire inlet is G1/2. Consult with CKD regarding NPT threads.)

Performance/characteristics by model

Item	4F3	4F4	4F5	4F6	4F7
Response time *1 ms	100	120	140	400	600

*1 : The response time is the value at 0.5 MPa working pressure, with no lubrication, and with the power ON. It depends on the pressure and the lubricant quality.

Weight

Item			4F3	4F4	4F5	4F6	4F7
Weight kg	2-position	Single	0.92	1.27	1.53	2.20	3.74
		Double	1.48	1.85	2.14	2.82	4.34
	3-position		1.69	2.02	2.40	3.20	5.36

Flow characteristics

Model No.	Solenoid position		Port size	C[dm³/(s·bar)]	b	S(mm²)
4F3	2-position	Single	Rp1/4	3.9	0.42	-
		Double				
	3-position	All ports closed		4.0	0.35	
		A/B/R connection		4.5	0.42	
		P/A/B connection		4.0	0.35	
	2-position	Single	Rp3/8	5.8	0.42	
		Double				
	3-position	All ports closed		4.4	0.42	
		A/B/R connection		5.1	0.46	
		P/A/B connection		4.4	0.42	
4F4	2-position	Single	Rc1/4 Rc3/8	5.0	0.21	-
		Double				
	3-position	All ports closed		4.7	0.24	
		A/B/R connection		5.3	0.29	
		P/A/B connection		5.3	0.29	
4F5	2-position	Single	Rc3/8 Rc1/2	10.0	0.32	-
		Double				
	3-position	All ports closed		9.7	0.28	
		A/B/R connection		9.8	0.25	
		P/A/B connection				
4F6	2-position	Single	Rc1/2 Rc3/4	18.0	0.31	-
		Double				
	3-position	All ports closed		15.0	0.23	
		A/B/R connection				
		P/A/B connection				
4F7	2-position	Single	Rc3/4 Rc1	-	-	160
		Double				
	3-position	All ports closed				
		A/B/R connection				
		P/A/B connection				

*1 : Effective cross-sectional area S and sonic conductance C are converted as S ≈ 5.0 x C.

Specifications for rechargeable battery

● For use in the rechargeable battery manufacturing process, materials used for air path and sliding section are limited; inquire with CKD for model numbers.

How to order

● Pilot operated explosion-proof 5-port valve

4F3 1 0EX - 08 - G 10 - P - AC100V - ( )

Ⓐ Model No. | Ⓑ Solenoid position | Ⓒ Port size | Ⓓ Applicable cable O.D. (*1) | Ⓔ Option | Ⓕ Voltage (*2) | Ⓖ Organizations for explosive-proof certification

Code	Description	Ⓐ Model No. 4F3	4F4	4F5	4F6	4F7
Ⓑ Solenoid position						
1	2 position single	●	●	●	●	●
2	2-position double	●	●	●	●	●
3	3-position all ports closed	●	●	●	●	●
4	3-position ABR connection	●	●	●	●	●
5	3-position PAB connection	●	●	●	●	●
Ⓒ Port size						
08	Rp1/4 (for 4F3), Rc1/4	●	●			
10	Rp3/8 (for 4F3), Rc3/8	●	●	●		
15	Rc1/2			●	●	
20	Rc3/4				●	●
25	Rc1					●
08N	NPT1/4	●	●			
10N	NPT3/8	●	●	●		
15N	NPT1/2			●	●	
20N	Rc3/4				●	●
25N	NPT1					●
08G	G1/4	●	●			
10G	G3/8	●	●	●		
15G	G1/2			●	●	
20G	G3/4				●	●
25G	G1					●
Ⓓ Applicable cable O.D.						
9	ø7.5 to ø9.5	●	●	●	●	●
10	ø9.5 to ø10.5	●	●	●	●	●
11	ø10.5 to ø11.5	●	●	●	●	●
13	ø11.5 to ø13.5	●	●	●	●	●
Ⓔ Option						
Blank	No option	●	●	●	●	●
P	Installation feet L-bracket (for 4F3 2-position single) Installation feet U-bracket (for 4F4 to 7)	●	●	●	●	●
P1	Installation feet U-bracket (for 2-position double solenoid/3-position)	●				
H	Check valve attached (only applicable to 3-position all ports closed)	●	●	●	●	●
N	Plug included (for 3-port valve)	●	●	●	●	●
R	Position change of manual override	●				
NC	3-port valve specifications plug assembly (C1:A, E1:R1 assembly)	●	●	●	●	●
NO	3-port valve specifications plug assembly (C2:B, E2:R2 assembly)	●	●	●	●	●
Ⓕ Voltage						
AC100V	100 VAC (50/60 Hz)	●	●	●	●	●
AC200V	200 VAC (50/60 Hz)	●	●	●	●	●
DC24V	24 VDC	●	●	●	●	●
DC12V	12 VDC	●	●	●	●	●
AC110V	110 VAC (50/60Hz)	●	●	●	●	●
AC220V	220 VAC (50/60 Hz)	●	●	●	●	●
*** Other made-to-order products**						
[AC voltage]						
12V,24V,48V,115V,120V,125V 127V,210V,230V,240V,250V,380V		●	●	●	●	●
[DC voltage]						
45V,48V,80V,100V,110V,125V		●	●	●	●	●
Ⓖ Organizations for explosive-proof certification						
Blank	Japan certification (TIIS)	●	●	●	●	●
KR	Korea certification (KOSHA)	●	●	●	●	●
TW	Taiwan certification (ITRI)	●	●	●	●	●
CN	China certification (CCC)	●	●	●	●	●

⚠ Precautions for model No. selection

*1: Ⓖ For Explosion-proof certification institution “K R” and “T W”, “9” is ø8. 5 to ø9. 5. Also, “13” cannot be selected.
*2: Any explosion-proof certified voltage other than the listed voltage 220 VDC is a made to order supported.
*3: Order coils as a pilot actuator assembly.
*4: Consult with CKD when using vacuum with the external pilot (K), cylinder pressurizing and exhaust pressurizing.

[Example of model No.]

4F410EX-10-G10-P-AC100V

Ⓐ Model No. : Pilot operated explosion-proof 5-port valve
Ⓑ Solenoid position : 2-position single
Ⓒ Port size : Rc3/8
Ⓓ Applicable cable O.D. : ø9.5 to 10.5
Ⓔ Option : Installation feet U-bracket
Ⓕ Voltage : 100 VAC

Internal structure and parts list

4F310EX

● 2-position single

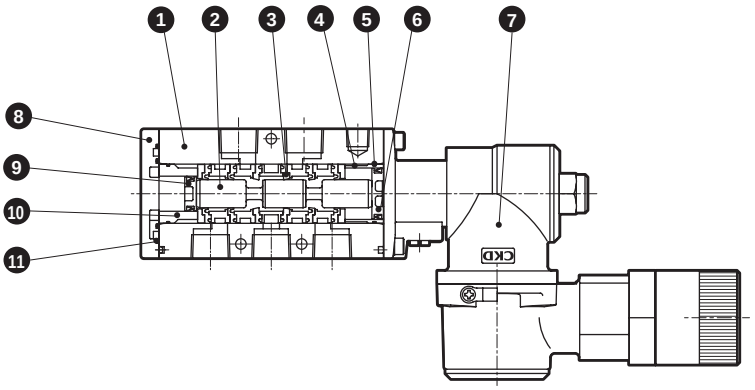

4F320EX

● 2-position double

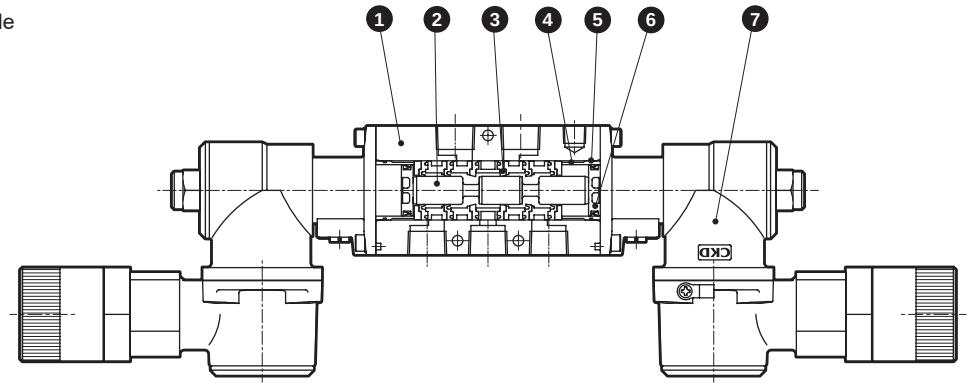

4F330EX/4F340EX/4F350EX

● 3-position
All ports closed
A/B/R connection
P/A/B connection

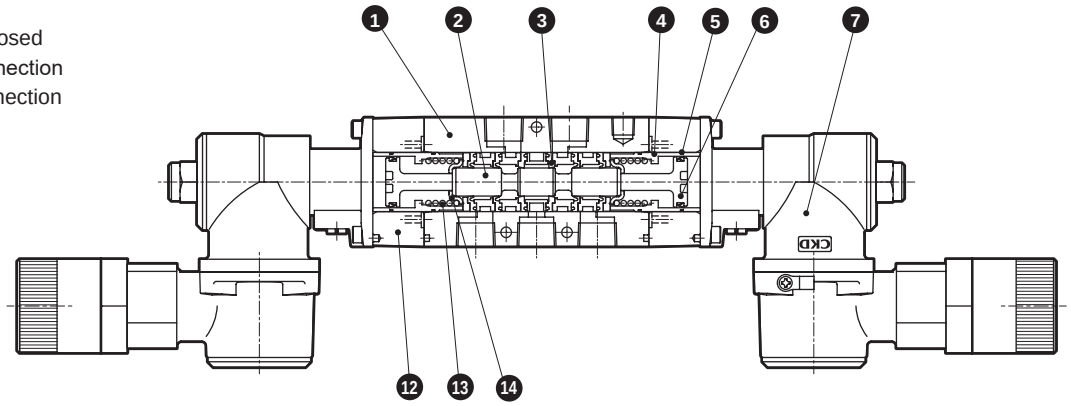

Main parts list

No.	Part name	Material
1	Body	Aluminum alloy die-casting
2	Spool	Aluminum alloy
3	Sealant assembly	-
4	Cylinder (A) (large)	Aluminum alloy
5	O-ring	Nitrile rubber
6	Piston assembly (A) (large)	-
7	Actuator assembly	*1
8	Cap	Aluminum alloy die-casting
9	Piston assembly (B) (small)	-
10	Cylinder (B) (small)	Aluminum alloy
11	Gasket	Nitrile rubber
12	Body block	Aluminum alloy die-casting
13	Spring	Piano wire
14	Spring seat	Stainless steel

Repair parts list

No./part name	3 6 9	3	6	9
Model No.	Repair parts kit	Sealant Assy	Piston Assy (A) (L)	Piston Assy (B) (S)
4F310EX	4F310-K	4F9-106	4F9-104	4F9-103
4F320EX	4F320-K			-
4F330EX	4F330-K		4F9-114	-
4F340EX				-
4F350EX				-

*1 (Actuator assembly model No.)
4F3$\frac{1}{3}$0EX-GⒹ-Ⓕ
Select from How to order on page 1784.

Internal structure and parts list

4F[4/5/6/7]10EX
● 2-position single

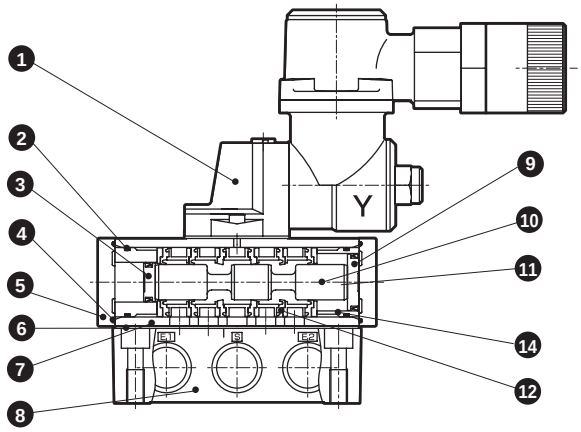

4F[4/5/6/7]20EX
● 2-position double

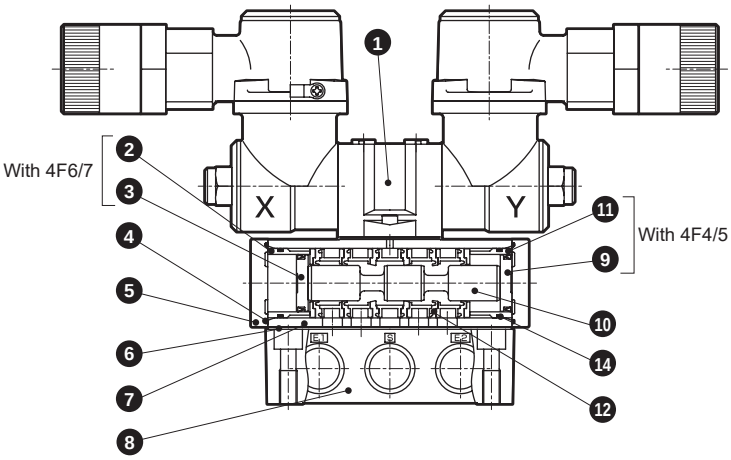

4F[4/5/6/7]30EX/4F[4/5/6/7]40EX
4F[4/5/6/7]50EX
● 3-position
All ports closed
A/B/R connection
P/A/B connection

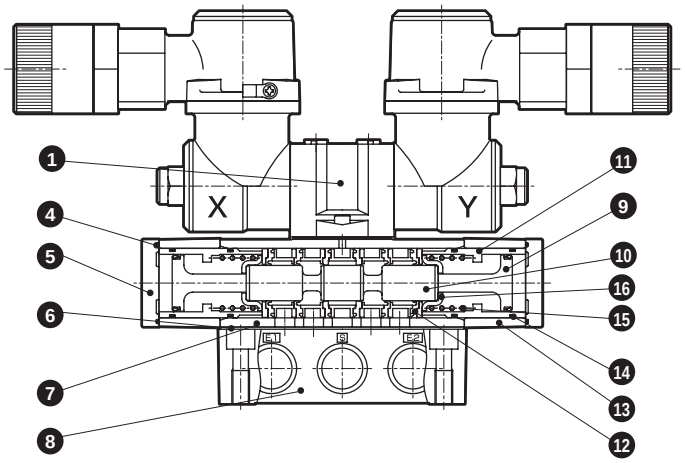

Main parts list

No.	Part name	Material
1	Actuator assembly	(*1)
2	Cylinder (B) (small)	Aluminum alloy
3	Piston assembly (B) (small)	-
4	Gasket	Nitrile rubber
5	Cap	Aluminum alloy die-casting
6	Sub-plate gasket	Nitrile rubber
7	Body	Aluminum alloy die-casting
8	Sub-plate	Aluminum alloy die-casting
9	Piston assembly (A) (large)	-
10	Spool	Aluminum alloy
11	Cylinder (A) (large)	Aluminum alloy
12	Sealant assembly	-
13	Body block	Aluminum alloy die-casting
14	O-ring	Nitrile rubber
15	Spring	Piano wire
16	Spring seat	Stainless steel

*1 (Actuator assembly)
4F4[1/2]0EX-G Ⓓ - Ⓕ
Select from How to order on page 1784.

Repair parts list

No./part name	9 12 3	9	12	3
Model No.	Repair parts kit	Piston Assy (A) (L)	Sealant Assy	Piston Assy (B) (S)
4F410EX	4F410-K	4F9-104	4F9-106	4F9-103
4F420EX	4F420-K			-
4F430EX	4F430-K	4F9-114		-
4F440EX				-
4F450EX				-
4F510EX	4F510-K	4F9-108	4F9-107	4F9-109
4F520EX	4F520-K			-
4F530EX	4F530-K	4F9-115		-
4F540EX				-
4F550EX				-
4F610EX	4F610-K	4F9-117	4F9-118	4F9-116
4F620EX	4F620-K	-		
4F630EX	4F630-K	4F9-122		-
4F640EX				
4F650EX				-
4F710EX	4F710-K	4F9-121	4F9-119	4F9-120
4F720EX	4F720-K	-		
4F730EX	4F730-K	4F9-123		-
4F740EX				
4F750EX				-

Dimensions

4F310EX

● 2-position single

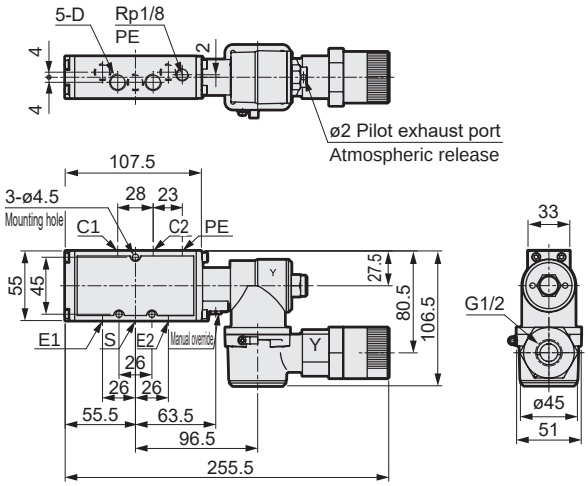

Model No.	D
*-08	Rp1/4
*-10	Rp3/8

4F320EX

● 2-position double

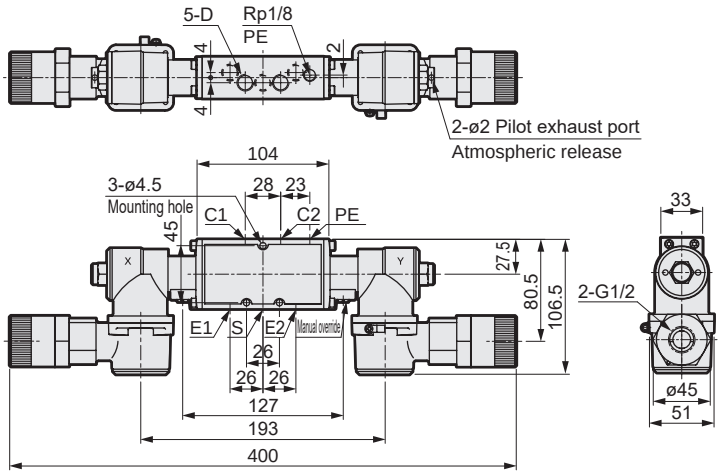

4F330EX

● 3-position all ports closed

4F340EX

● 3-position A/B/R connection

4F350EX

● 3-position P/A/B connection

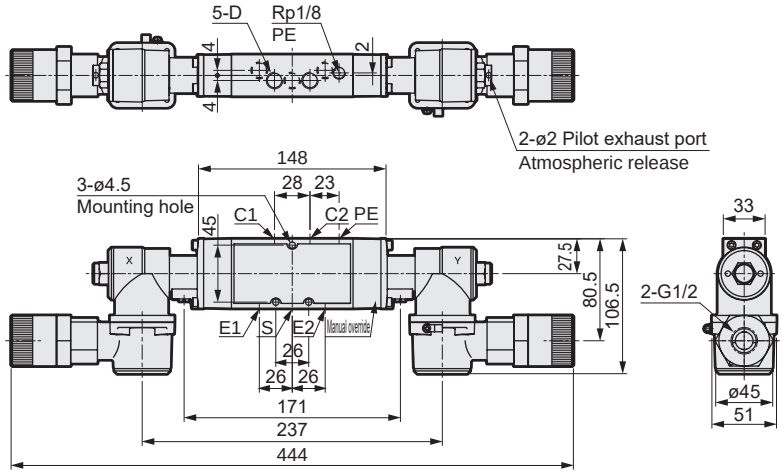

Model No.	D
*-08	Rp1/4
*-10	Rp3/8

● Position change of manual operating device (R)

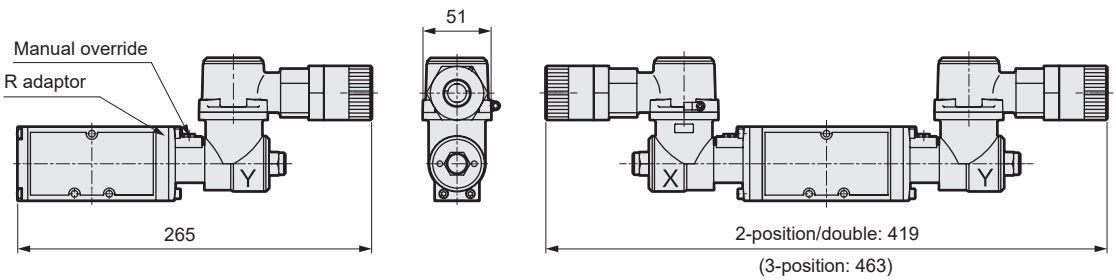

● L type installation feet (P) dedicated for single

Material: Cold-rolled steel plates
Zinc plated

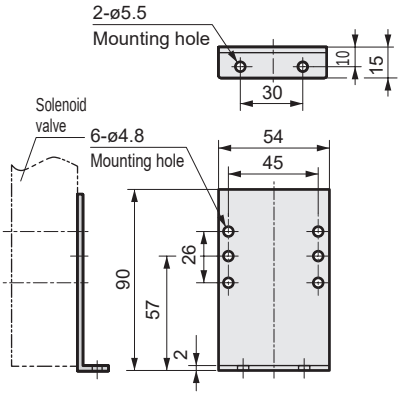

● U type installation feet (P1)

Material: Cold-rolled steel plates
Zinc plated

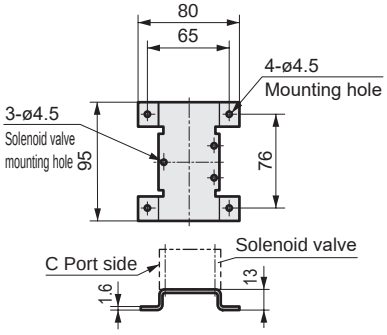

Dimensions

4F410EX

● 2-position single

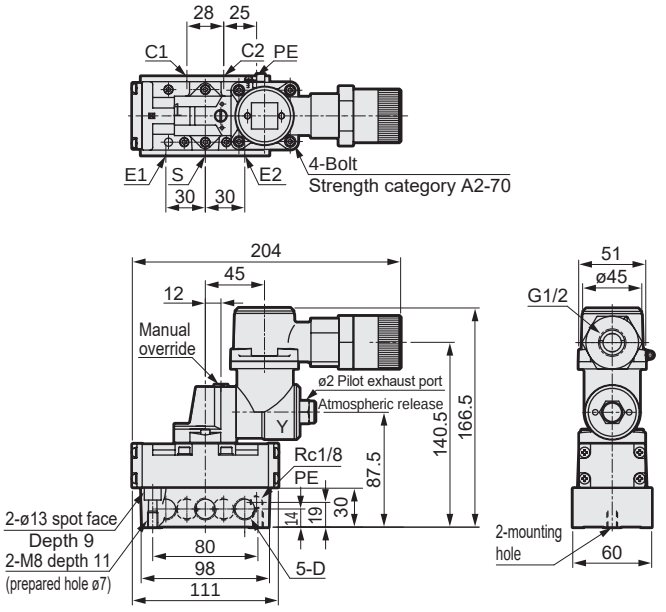

4F420EX

● 2-position double

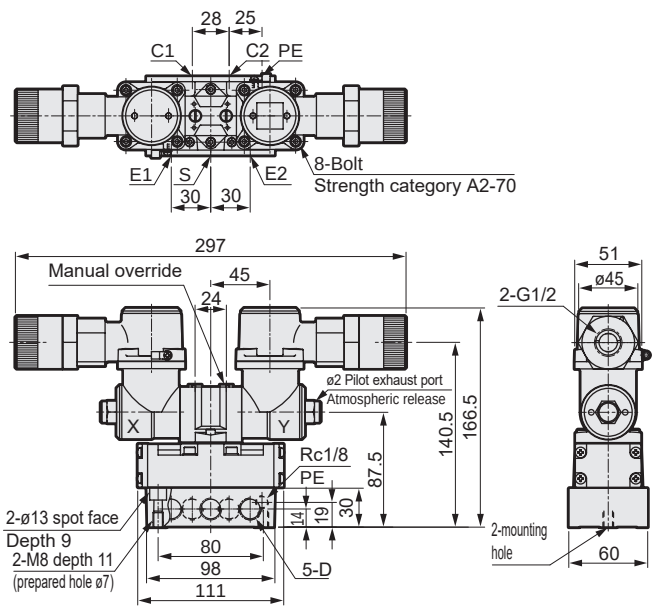

Model No.	D
*-08	Rc1/4
*-10	Rc3/8

4F430EX

● 3-position all ports closed

4F440EX

● 3-position A/B/R connection

4F450EX

● 3-position P/A/B connection

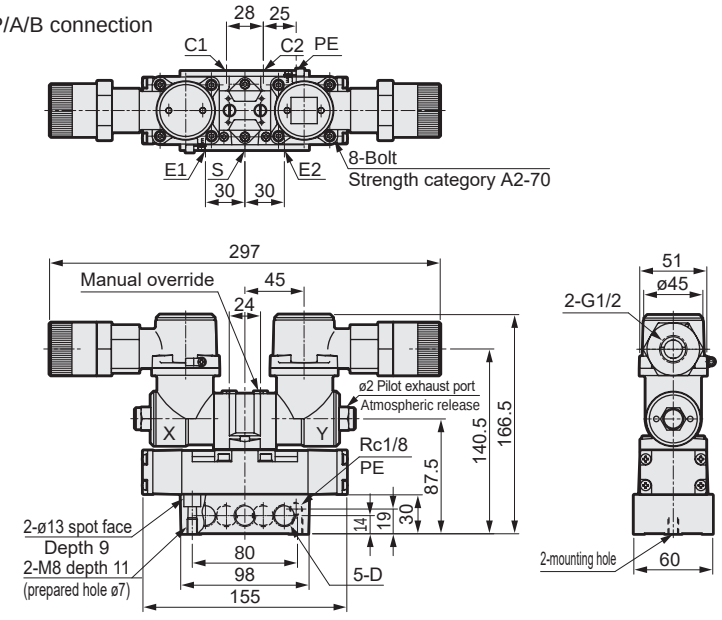

● U type installation feet (P)

Material: Hot-rolled steel plates
Zinc plated

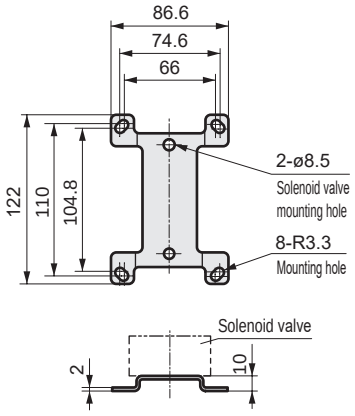

Model No.	D
*-08	Rc1/4
*-10	Rc3/8

Dimensions

4F510EX

● 2-position single

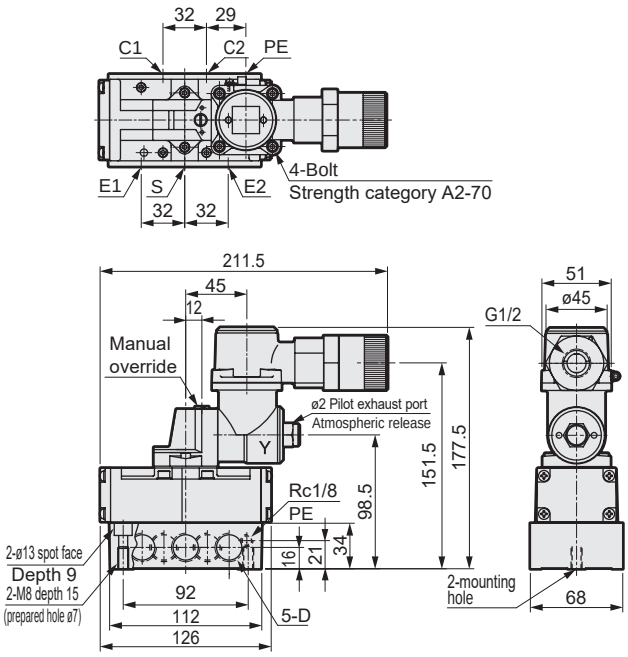

4F520EX

● 2-position double

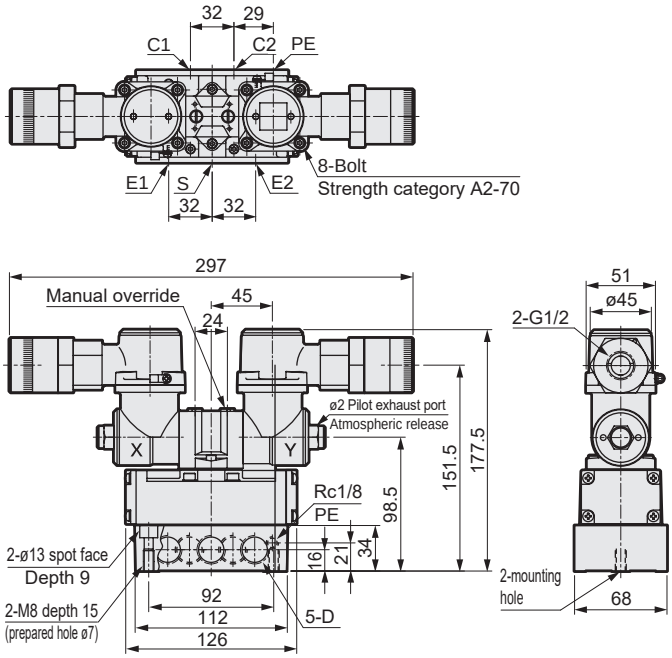

Model No.	D
*-10	Rc3/8
*-15	Rc1/2

4F530EX

● 3-position all ports closed

4F540EX

● 3-position A/B/R connection

4F550EX

● 3-position P/A/B connection

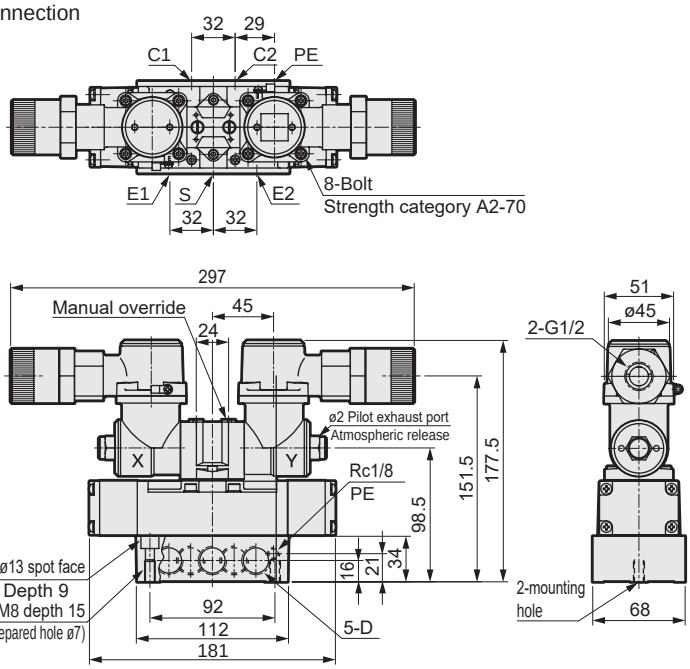

Model No.	D
*-10	Rc3/8
*-15	Rc1/2

● U type installation feet (P)

Material: Hot-rolled steel plates
Zinc plated

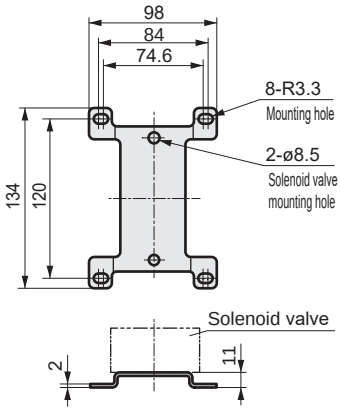

Dimensions

4F610EX

● 2-position single

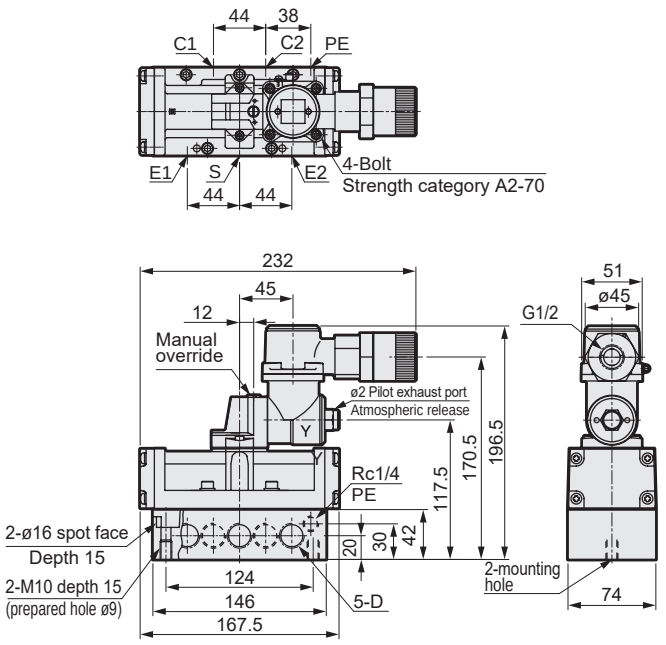

4F620EX

● 2-position double

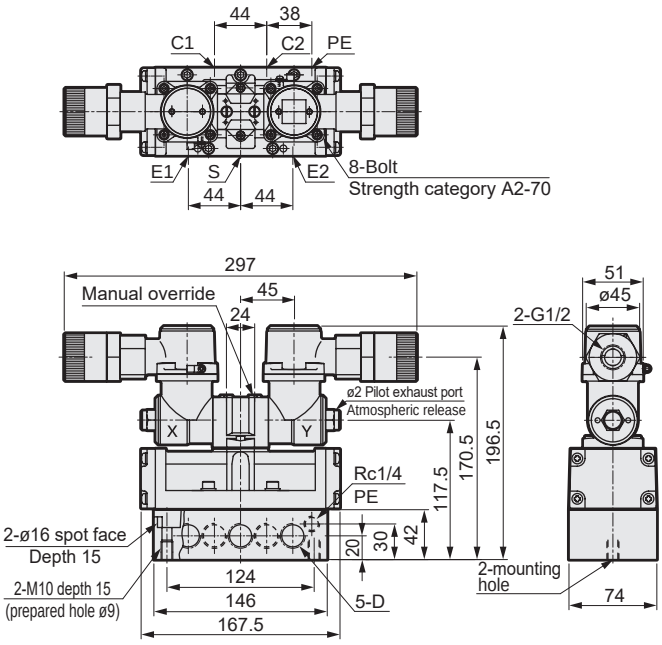

Model No.	D
*-15	Rc1/2
*-20	Rc3/4

4F630EX

● 3-position all ports closed

4F640EX

● 3-position A/B/R connection

4F650EX

● 3-position P/A/B connection

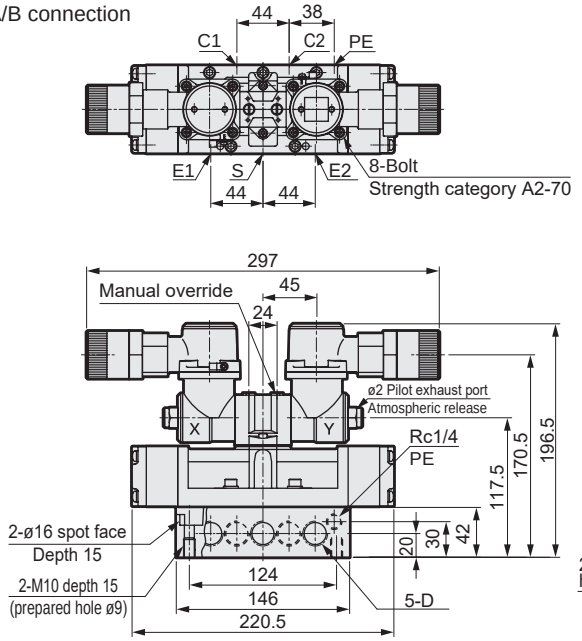

Model No.	D
*-15	Rc1/2
*-20	Rc3/4

● U type installation feet (P)

Material: Cold-rolled steel plates
Zinc plated

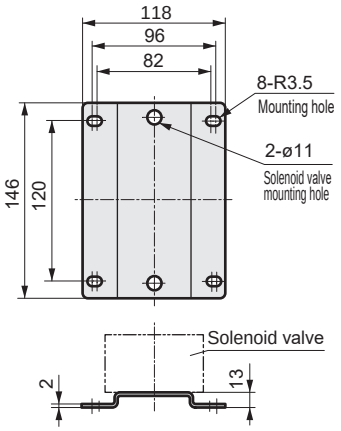

Dimensions

4F710EX

● 2-position single

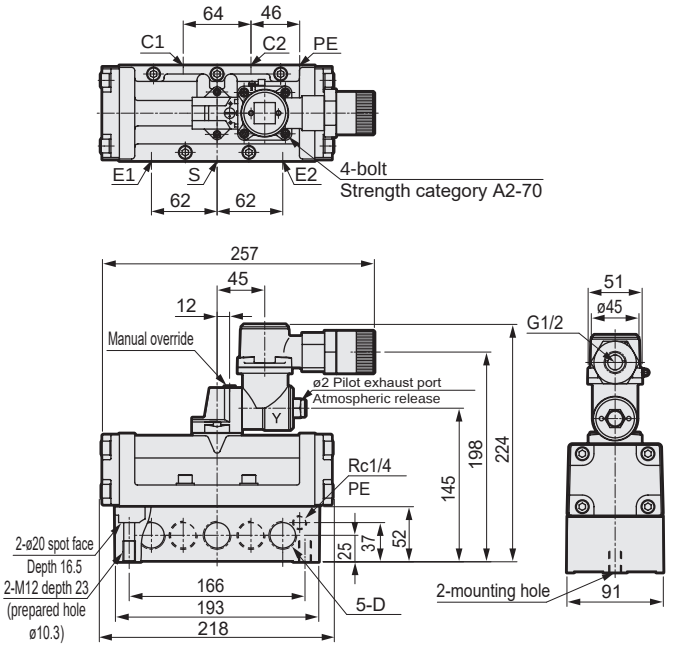

Model No.	D
*-20	Rc3/4
*-25	Rc 1

4F720EX

● 2-position double

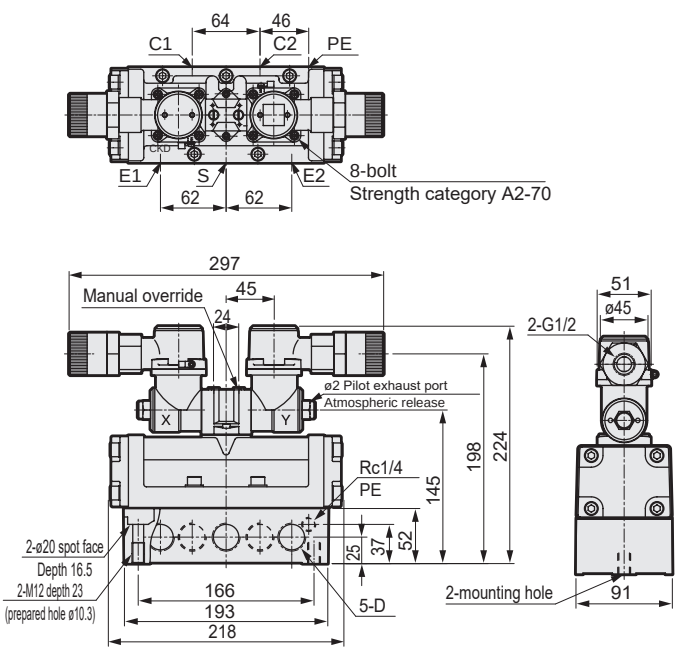

4F730EX

● 3-position all ports closed

4F740EX

● 3-position A/B/R connection

4F750EX

● 3-position P/A/B connection

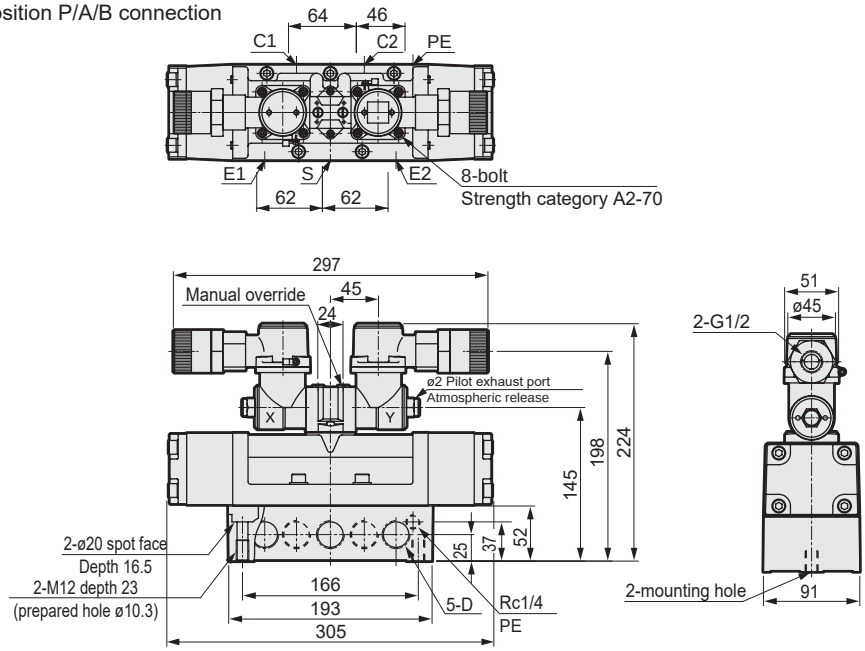

Model No.	D
*-20	Rc3/4
*-25	Rc 1

● U type installation feet (P)

Material:Cold-rolled steel plates Zinc plated

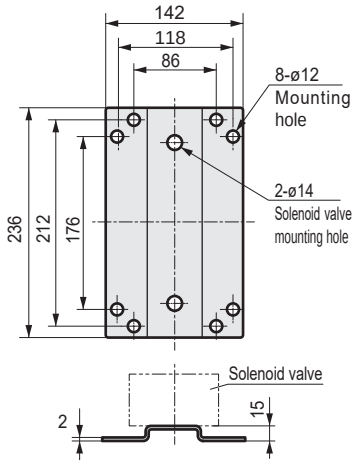

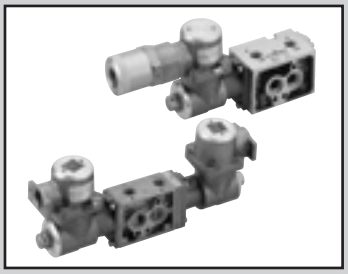

Discrete valve/body piping
Pilot operated explosion-proof 5-port valve pneumatic valve

4F1/3*0EX Series

NAMUR standards option

- Pressure and explosion proof construction ExdIIBT4 (group IIB/temperature class T4)
- Japan Conformity Certificate No. TC20523
- Korea Conformity Certificate No. 15-AV4B0-0389
- Taiwan Conformity Certificate No. ITRI (2015) No. 00216
- China Conformity Certificate No. (CCC) 2020322307002070
- China explosion-proof type (NEPSI) GYB20.2251X

RoHS

Common specifications

Item	Description
Valve and operation	Pilot operated soft spool valve
Working fluid	Compressed air
Max. working pressure MPa	1.0
Min. working pressure MPa	0.1
Proof pressure MPa	1.5
Ambient temperature °C	-10 to 60 (*1)
Fluid temperature °C	5 to 60
Lubrication	Not required (use turbine oil ISO VG32 if necessary for lubrication)
Explosion-proof performance	ExdIIBT4 (*2)
Vibration resistance m/s^2	50 or less
Shock resistance m/s^2	300 or less
Atmosphere	Cannot be used in corrosive gas environments

*1: The ambient temperature indicates the temperature for storage and upon installation, which will differ from the fluid temperature during operation.
*2: The display of "X" for explosion-proof performance ExdIIBT4X, with "A2-70 bolt strength category (bolts used in actuator assembly only)" and "allowable cable temperature of 85°C or more" has been omitted.
*X is not indicated on the certification by regulations.

Flow characteristics

Model No.	Solenoid position		Port size	Sonic conductance C[dm^3/(s·bar)]
4F1	2-position	Single	Rc1/4 (S,E1,E2)	1.6
		Double		
4F3	2-position	Single		3.1
		Double		

*1: Effective cross-sectional area S and sonic conductance C are converted as S ≈ 5.0 x C.

Electrical specifications

Item			Description
Rated voltage V	AC		100, 200, 110, 220(50/60Hz)
	DC		12, 24
Rated voltage fluctuation range			±10%
Starting current A	AC	100V	0.186/0.135
		200V	0.093/0.068
		110V	0.169/0.123
		220V	0.085/0.061
	DC	12V	0.332
		24V	0.166
Holding current A	AC	100V	0.06/0.05
		200V	0.03/0.025
		110V	0.055/0.045
		220V	0.027/0.023
	DC	12V	0.332
		24V	0.166
Power consumption W	AC	100V	4.5/4.0
		200V	4.5/4.0
		110V	4.5/4
		220V	4.5/4
	DC	12V	4
		24V	4
Thermal class			H

How to order

4F3 1 0EX - NM - G 10 - R - AC100V - KR

- 4F3 → Ⓐ Model No.
- 1 → Ⓑ Solenoid position
- NM → Ⓒ Port size
- 10 → Ⓓ Applicable cable O.D.
- R → Ⓔ Option
- AC100V → Ⓕ Voltage
- KR → Ⓖ Organizations for explosive-proof certification

Code	Description	4F1	4F3
Ⓐ Model No.			
4F1	4F1 Series	●	
4F3	4F3 Series		●
Ⓑ Solenoid position			
1	2 position single	●	●
2	2-position double	●	●
Ⓒ Port size			
NM	NAMUR standards (port size Rc1/4)	●	●
Ⓓ Applicable cable O.D.			
9	ø7.5 to ø9.5 (*5)	●	●
10	ø9.5 to ø10.5	●	●
11	ø10.5 to ø11.5	●	●
13	ø11.5 to ø13.5 (*5)	●	●
Ⓔ Option			
Blank	No option	●	●
R	Position change of manual override	●	●
Ⓕ Voltage			
AC100V	100 VAC (50/60 Hz)	●	●
AC200V	200 VAC (50/60 Hz)	●	●
DC24V	24 VDC	●	●
DC12V	12 VDC	●	●
AC110V	110 VAC (50/60 Hz)	●	●
AC220V	220 VAC (50/60 Hz)	●	●
*** Other made-to-order products**			
[AC voltage]			
12V, 24V, 48V		●	●
115V, 120V, 125V		●	●
127V, 210V, 230V		●	●
240V, 250V, 380V		●	●
[DC voltage]			
45V, 48V, 80V		●	●
100V, 110V, 125V		●	●
Ⓖ Organizations for explosive-proof certification			
Blank	Japan certification (TIIS)	●	●
KR	Korea certification (KOSHA)	●	●
TW	Taiwan certification (ITRI)	●	●
CN	China certification (CCC)	●	●

Precautions for model No. selection

*1:For 4F1, the body repair parts, etc. are 4F1 standard products, while the pilot actuator assembly uses 4F3.
*2:For 4F3, note that the repair parts of the body are dedicated parts.
*3:The only piping port is Rc1/4.
The C1/C2 ports on the NAMUR surface have not been threaded.
*4:When using 4F1 outdoors, install it so that rainwater, etc., does not enter, as the PE exhaust and breathing hole are connected to the atmosphere.
*5:When the Explosion-proof certification engine is KR or TW, the range of applicable cable O.D. 9 is ø8.5 to 9.5 and applicable cable O.D. 13 cannot be selected.

[Example of model No.]

4F310EX-NM-G10-R-AC100V-KR

- Ⓐ Model No. :4F3*0EX
- Ⓑ Solenoid position : 2-position single
- Ⓒ Port size : Rc1/4
- Ⓓ Applicable cable O.D. : ø9.5 to ø10.5
- Ⓔ Option : Position change of manual override
- Ⓕ Voltage : 100 VAC
- Ⓖ Organizations for explosive-proof certification :Korea certification (KOSHA)

Dimensions

● 4F110EX-NM

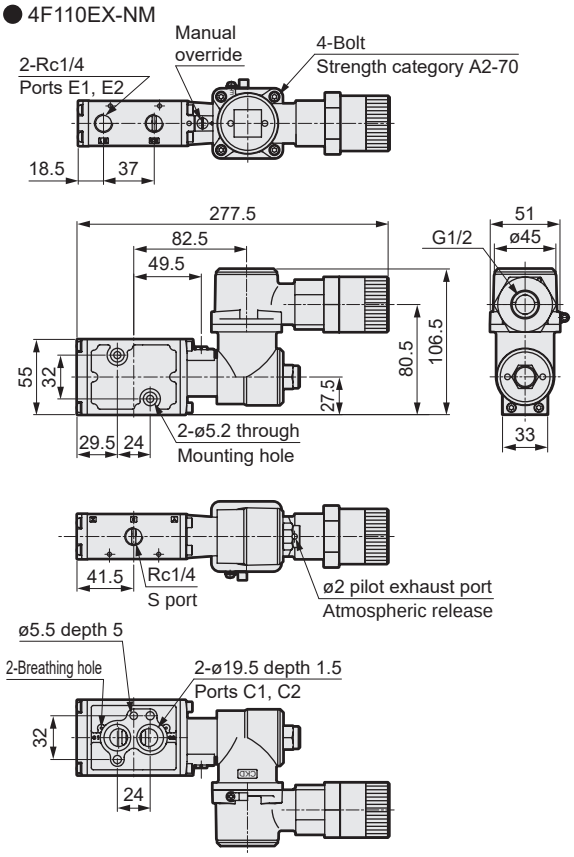

● 4F120EX-NM

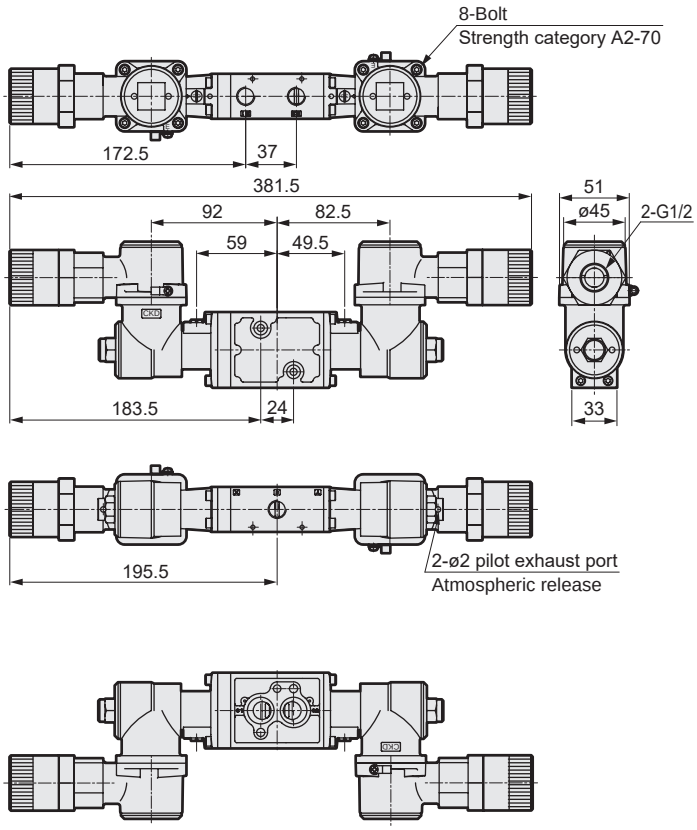

● 4F310EX-NM

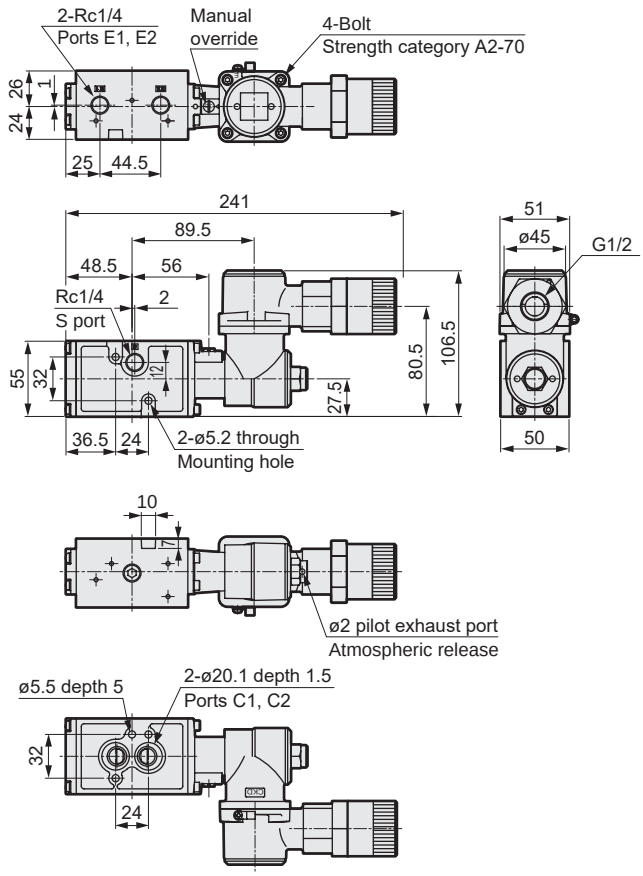

● 4F320EX-NM

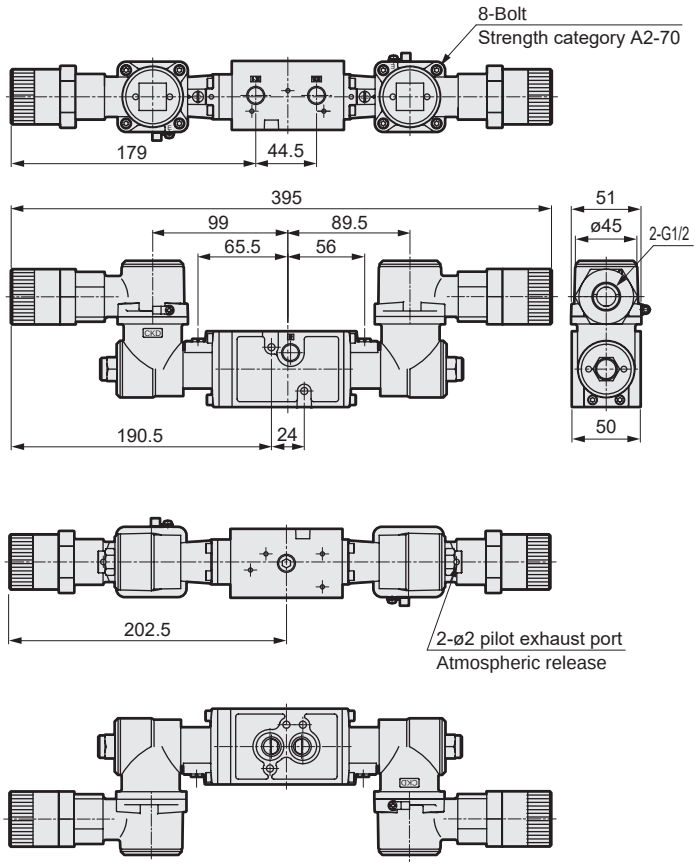

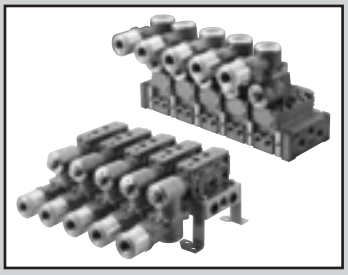

Individual wiring manifold
Pilot operated explosion-proof 5-port valve pneumatic valve

M4F**0EX Series

- Pressure and explosion proof construction ExdIIBT4 (group IIB/temperature class T4)
- Japan Conformity Certificate No. TC20523
- Korea Conformity Certificate No. 15-AV4BO-0389
- Taiwan Conformity Certificate No. ITRI (2015) No. 00216X
- China Conformity Certificate No. (CCC) 2020322307002070
- China explosion-proof type (NEPSI) GYB20.2251X
- Cylinder bore size: ø63 to ø250

RoHS CAD

JIS symbol

2-position/single

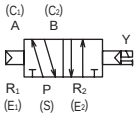

2-position/double

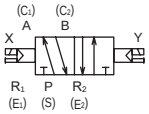

3-position/all ports closed

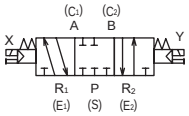

3-position/ABR connection

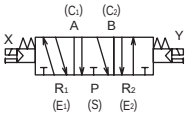

3-position/PAB connection

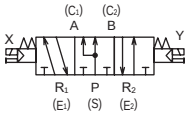

Common specifications

Item	Description
Manifold method	Manifold integrated
Manifold	Common exhaust
	Individual exhaust (M4F3)
Station No.	2 to 10 stations
Valve and operation	Pilot operated soft spool valve
Working fluid	Compressed air
Max. working pressure MPa	1.0
Min. working pressure MPa	Refer to Individual specifications listed below
Proof pressure MPa	1.5
Ambient temperature °C (*1)	-10 to 60(no freezing)
Fluid temperature °C	5 to 60
Lubrication	Not required (use turbine oil ISO VG32 if necessary for lubrication)
Explosion-proof performance (*2)	ExdIIBT4X
Manual override	Locking
Vibration resistance m/s^2	50 or less
Shock resistance m/s^2	300 or less
Atmosphere	Cannot be used in corrosive gas environment.

*1: The ambient temperature indicates the temperature for storage and upon installation, which will differ from the fluid temperature during operation.
*2: The display of "X" of explosion-proof performance Exd IIB T4X on products with "A2-70 bolt strength category (bolts used in actuator assembly only)" and "allowable cable temperature of 85°C or more" has been omitted.
*X is not indicated on the certification by regulations.

Electrical specifications

Item			Description
Rated voltage	AC		100V,200V,110V,220V(50/60Hz)
	DC		24V,12V
Rated voltage fluctuation range			±10%
Starting current A	AC	100V	0.186/0.135
		200V	0.093/0.068
		110V	0.169/0.123
		220V	0.085/0.061
	DC	24V	0.166
		12V	0.332
Holding current A	AC	100V	0.06/0.05
		200V	0.03/0.025
		110V	0.055/0.045
		220V	0.027/0.023
	DC	24V	0.166
		12V	0.332
Power consumption W	AC	100V	4.5/4
		200V	4.5/4
		110V	4.5/4
		220V	4.5/4
	DC	24V	4
		12V	4
Thermal class			H

Individual specifications

Item				M4F3	M4F4	M4F5	M4F6	M4F7
Min. working pressure MPa	2-position		Single	0.1	0.1	0.1	0.15	0.15
			Double					
	3-position		All ports closed	0.15	0.15	0.15		
			A/B/R connection					
			P/A/B connection					
Connection Bore size (*1)	Common exhaust method		Cylinder port C	Rp1/4,Rp3/8	Rc1/4	Rc3/8	Rc1/2	Rc3/4
			Exhaust port E	Rc1/2	Rc3/8	Rc1/2	Rc3/4	Rc3/4
			Air supply port S	Rc1/2	Rc3/8	Rc1/2	Rc3/4	Rc1
	Individual exhaust method		Cylinder port C	Rp1/4,Rp3/8	Rc1/4	Rc3/8	Rc1/2	Rc3/4
			Exhaust port E	Rc1/4,Rc3/8	Rc1/4	Rc3/8	Rc1/2	Rc1/2
			Air supply port S	Rc1/2	Rc3/8	Rc1/2	Rc3/4	Rc1

*1: NPT threads can also be used for 4F3 to 7 piping ports. Contact CKD for details.
(However, the external wire inlet is G1/2. Consult with CKD regarding NPT threads.)

Performance/characteristics by model

Item	M4F3	M4F4	M4F5	M4F6	M4F7
Response time ms (*1)	100	120	140	400	600

*1: The response times are values with working pressure of 0.5 MPa, without lubrication, and with the power ON. They depend on the pressure and the lubricant quality.

Weight

Item			M4F3	M4F4	M4F5	M4F6	M4F7
Weight calculation formula kg (n: Station No.)	2-position	Single	1.27×n+0.98	1.52×n+0.47	1.85×n+0.77	3.53×n+1.79	4.84×n+1.79
		Double	1.83×n+0.98	2.10×n+0.47	2.46×n+0.77	4.15×n+1.79	5.44×n+1.79
	3-position		2.04×n+0.98	2.27×n+0.47	2.72×n+0.77	4.53×n+1.79	6.46×n+1.79

Flow characteristics

Model No.	Solenoid position		Port size	C[dm³/(s·bar)]	b	S(mm²)
4F3	2-position	Single	Rp1/4	3.9	0.42	-
		Double				
	3-position	All ports closed		4.0	0.35	
		A/B/R connection		4.5	0.42	
		P/A/B connection		4.0	0.35	
	2-position	Single	Rp3/8	5.8	0.42	
		Double				
	3-position	All ports closed		4.4	0.42	
		A/B/R connection		5.1	0.46	
		P/A/B connection		4.4	0.42	
4F4	2-position	Single	Rc1/4	5.0	0.21	-
		Double				
	3-position	All ports closed		4.7	0.24	
		A/B/R connection		5.3	0.29	
		P/A/B connection		5.3	0.29	
4F5	2-position	Single	Rc3/8	10.0	0.32	-
		Double				
	3-position	All ports closed		9.7	0.28	
		A/B/R connection		9.8	0.25	
		P/A/B connection				
4F6	2-position	Single	Rc1/2	18.0	0.31	-
		Double				
	3-position	All ports closed		15.0	0.23	
		A/B/R connection				
		P/A/B connection				
4F7	2-position	Single	Rc3/4	-	-	160
		Double				
	3-position	All ports closed				
		A/B/R connection				
		P/A/B connection				

*1: Effective cross-sectional area S and sonic conductance C are converted as S ≈ 5.0 x C.

M4F**0EX Series

Individual wiring manifold

How to order

● Single solenoid valve for manifold (4F3)

4F3 1 0 EX - 08 - G 10 - N ——— AC100V - ○

*Purchase M4F3-GASKET-KIT together.

*For 4F3 NPT thread, refer to *5.

● Single solenoid valve for manifold (4F4 to 7)

4F4 1 9 EX - 00 - G 10 ——— AC100V - ○

● Manifold

M 4F3 1 0 EX - 08 - G 10 - N - 9 - C L - AC100V - ○ — S1 S2 S3 S4 S5 MP

List the number of solenoid valves to be used when using a mix manifold (Example:Page 1797.)

Ⓐ Model No. Ⓑ Solenoid position Ⓒ Port size Ⓓ Applicable cable O.D. (*1) Ⓔ Option Ⓕ Station No. Ⓖ Exhaust method Ⓗ Installation feet Ⓘ Voltage Ⓙ Organizations for explosive-proof certification

Code	Description	Ⓐ Model No. 4F3	4F4	4F5	4F6	4F7
Ⓑ Solenoid position						
1	2 position single	●	●	●	●	●
2	2-position double	●	●	●	●	●
3	3-position all ports closed	●	●	●	●	●
4	3-position ABR connection	●	●	●	●	●
5	3-position PAB connection	●	●	●	●	●
8	Mix manifold (when there are multiple solenoid positions)	●	●	●	●	●
Ⓒ Port size						
08	Rp1/4(For M4F3), Rc1/4	●	●			
10	Rp3/8(For M4F3),Rc3/8	●		●		
15	Rc1/2				●	
20	Rc3/4					●
08N	NPT1/4	●	●			
10N	NPT3/8	●		●		
08N2	NPT1/4(Solenoid valve Discrete for manifold)	●				
10N2	NPT3/8(Solenoid valve Discrete for manifold)	●				
15N	NPT1/2				●	
20N	NPT3/4					●
08G	G1/4	●	●			
10G	G3/8	●		●		
15G	C1/2				●	
20G	G3/4					●
Ⓓ Applicable cable O.D.						
9	ø7.5 to ø9.5	●	●	●	●	●
10	ø9.5 to ø10.5	●	●	●	●	●
11	ø10.5 to ø11.5	●	●	●	●	●
13	ø11.5 to ø13.5	●	●	●	●	●
Ⓔ Option						
Blank	No option	●	●	●	●	●
N	Plug included (for 3-port valve)	●	●	●	●	●
R	Position change of manual override	●				
NC	3-port valve specifications plug assembly (C1:A, E1:R1 assembly)	●	●	●	●	●
NO	3-port valve specifications plug assembly (C2:B, E2:R2 assembly)	●	●	●	●	●
Ⓕ Station No.						
2	2	●	●	●	●	●
to	to					
10	10 stations					
Ⓖ Exhaust method						
C	Common exhaust	●	●	●	●	●
I	Individual exhaust	●				
Ⓗ Installation feet						
L	L-bracket(Dedicated for single)	●				
U	U-bracket	●				
Ⓘ Voltage						
AC100V	100 VAC (50/60 Hz)	●	●	●	●	●
AC200V	200 VAC (50/60 Hz)	●	●	●	●	●
DC24V	24 VDC	●	●	●	●	●
DC12V	12 VDC	●	●	●	●	●
AC110V	110 VAC (50/60Hz)	●	●	●	●	●
AC220V	220 VAC (50/60 Hz)	●	●	●	●	●
*** Other made-to-order products**						
[AC voltage]						
12V,24V,48V,115V,120V,125V 127V,210V,230V,240V,250V,380V		●	●	●	●	●
[DC voltage]						
45V,48V,80V,100V,110V,125V		●	●	●	●	●
Ⓙ Organizations for explosive-proof certification (*2)						
Blank	Japan certification (TIIS)	●	●	●	●	●
KR	Korea certification (KOSHA)	●	●	●	●	●
TW	Taiwan certification (ITRI)	●	●	●	●	●
CN	China certification (CCC)	●	●	●	●	●

⚠ Precautions for model No. selection

*1: Ⓙ For Explosion-proof certification institution "KR" and "TW", "9" will be ø8.5 to ø9.5. In addition, "13" cannot be selected.

*2: "When "KR""TW" is selected, the voltage code is shown in the table below.

Code	Description	Code	Description
1	100 VAC	9	110 VDC
2	200 VAC	A	12 VDC
3	24 VDC	B	125 VDC
4	115 VAC	C	24 VAC
5	110 VAC	E	240 VAC
6	220 VAC	G	230 VAC
7	48 VDC	H	120 VAC
8	100 VDC	L	380 VAC

*3 : Any explosion-proof certified voltage other than the listed voltage 220 VDC is a made to order supported.

*4 : Consult with CKD when using vacuum with the external pilot (K), cylinder pressurizing and exhaust pressurizing.

*5 : Solenoid valve for manifold Discrete 4F3For the NPT thread of, the bore size is N2.
(Example) 4F310EX-08N2-G9-AC100V

[Example of model No.]

M4F310EX-08-G9-N-7-CL-AC100V

Ⓐ Model : Pilot operated explosion-proof 5-port valve, manifold
Ⓑ Solenoid position : 2-position single
Ⓒ Port size : Rp1/4
Ⓓ Applicable cable O.D. : ø7.5 to ø9.5
Ⓔ Option : plug included
Ⓕ Station No. : 7 stations
Ⓖ Exhaust method : common exhaust
Ⓗ Installation feet : L-bracket
Ⓘ Voltage : 100 VAC

How to order masking plate kit

M4F3 - **08** - **MP-KIT**

* Gasket attached (M4F3)
Gasket/set screw attached (M4F4 to M4F7)

Ⓐ Model No. Ⓑ Port size

Ⓐ Model No.
M4F3
M4F4
M4F5
M4F6
M4F7

Ⓑ Port size		
Code	Description	Model No.
08	Rp1/4	M4F3
10	Rp3/8	
Blank	Rc1/4	M4F4
Blank	Rc3/8	M4F5
D15	Rc1/2	M4F6
E20	Rc3/4	M4F7

How to order mix manifold

M 4F3 8 0EX - 08 - G 9 - N - 7 - C U - AC100V - S1 S2 S3 S4 S5 MP: **2 2 1 1 1 0**

Mix manifold "8"

*For How to order other items, refer to page 1796.

S1=1, 6 S2=2, 5
S3=3 S4=7
S5=4

*Create a manifold specifications sheet.

How to fill in form for ordering a mix manifold

(1) List the quantity for each function (solenoid position) at the end of How to order. The functions and codes are as shown below.

Example: 2-position single → S1

- S1 S2 S3 S4 S5 MP: **2 2 1 1 1 0**

List the quantity

Code	Function (solenoid position)
S1	2-position single
S2	2-position double
S3	3-position all ports closed
S4	3-position A/B/R connection
S5	3-position P/A/B connection
MP	Masking plate

(2) List the function (solenoid position) and layout position in the field for remarks.

Solenoid position code = ◯, ◯th station (where the left side is the 1st station when the piping port is facing forward.)

Example: S1 = 1, 6 (1st, 6th stations are 2-position single)

[Example of model No.]
For 7 stations

1	2	3	4	5	6	7	····· Layout position
2-position single	2-position double	3-position all ports closed	3-position P/A/B connection	2-position double	2-position single	3-position A/B/R connection	
S1	S2	S3	S5	S2	S1	S4	····· Code

2-position single (S1) : 2 units (1st station, 6th station)
2-position double (S2) : 2 units (2nd station, 5th station)
3-position all ports closed (S3) : 1 unit (3rd station)
3-position ABR connection (S4) : 1 unit (7th station)
3-position PAB connection (S5) : 1 unit (4th station)

M4F380EX-08-G9-N-7-CU-AC100V - S1 S2 S3 S4 S5 MP: **2 2 1 1 1 0**

S1=1, 6 S2=2, 5 S3=3
S4=7 S5=4

*Create a manifold specifications sheet.

Dimensions

M4F310EX- 08/10 -G*- CL (common exhaust) / IL (individual exhaust)

● With L-bracket

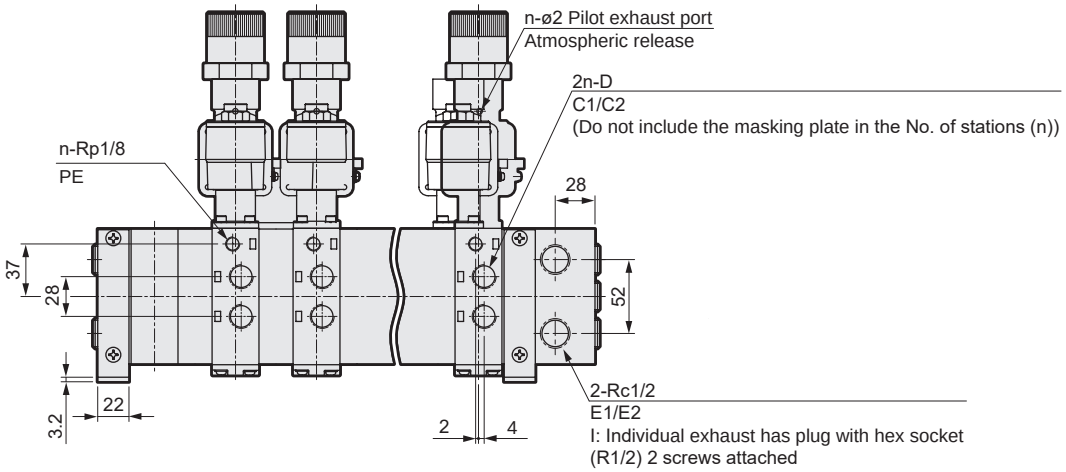

Station No. No.1 No.2 No.3 ····· No.n

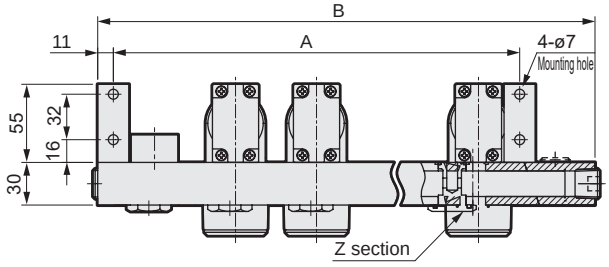

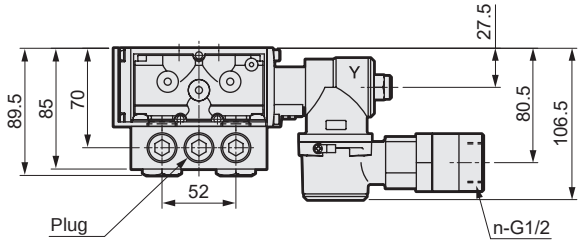

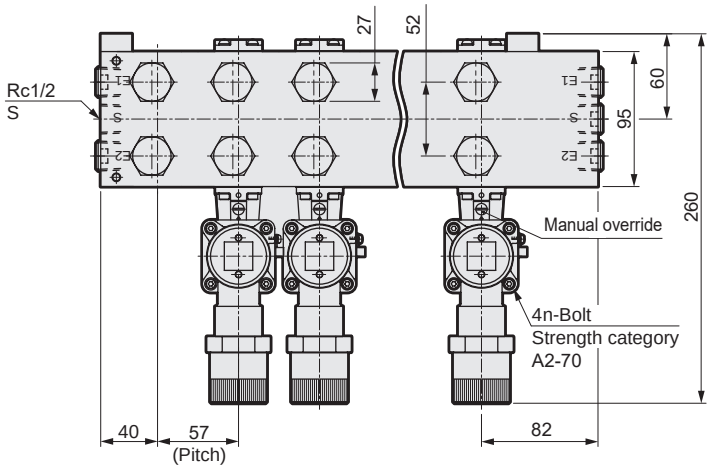

I: Z section with individual exhaust

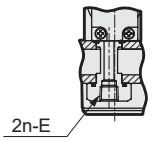

Station No.	2	3	4	5	6	7	8	9	10
A	115	172	229	286	343	400	457	514	571
B	179	236	293	350	407	464	521	578	635

Model No.	D	E	Discrete model No. for manifold
4F310EX-08	Rp1/4	Rc1/4	4F310EX 4F320EX 4F330EX 4F340EX 4F350EX
4F320EX-08			
4F330EX-08			
4F340EX-08			
4F350EX-08			
4F310EX-10	Rp3/8	Rc3/8	
4F320EX-10			
4F330EX-10			
4F340EX-10			
4F350EX-10			

Dimensions

M4F3*0EX- 08/10 -G*- CU (common exhaust) / IU (individual exhaust)

● With U-bracket

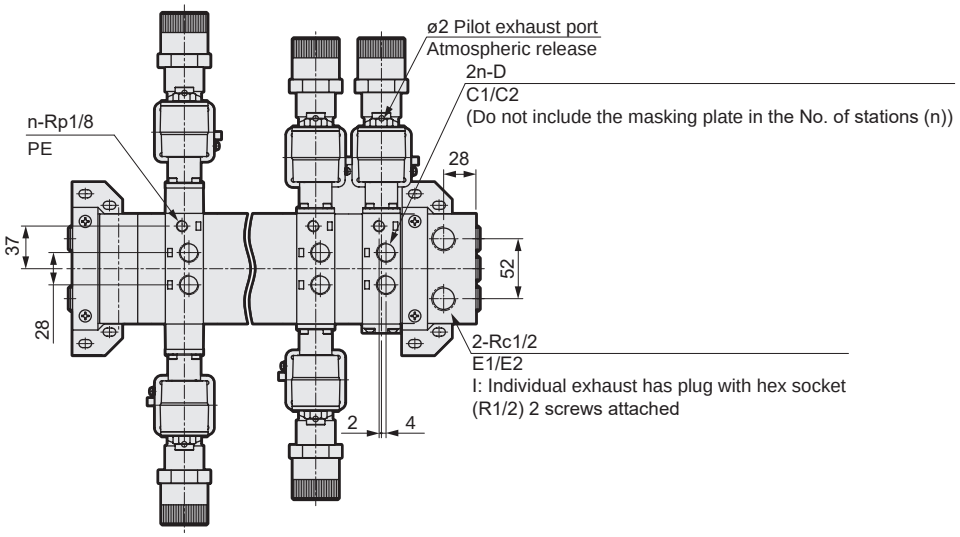

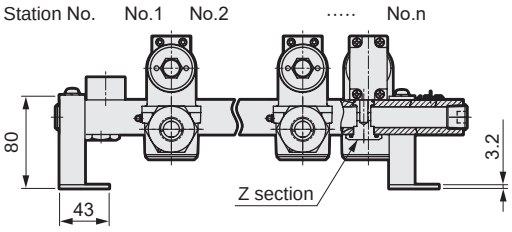

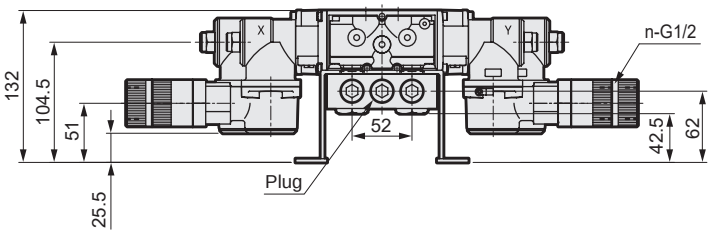

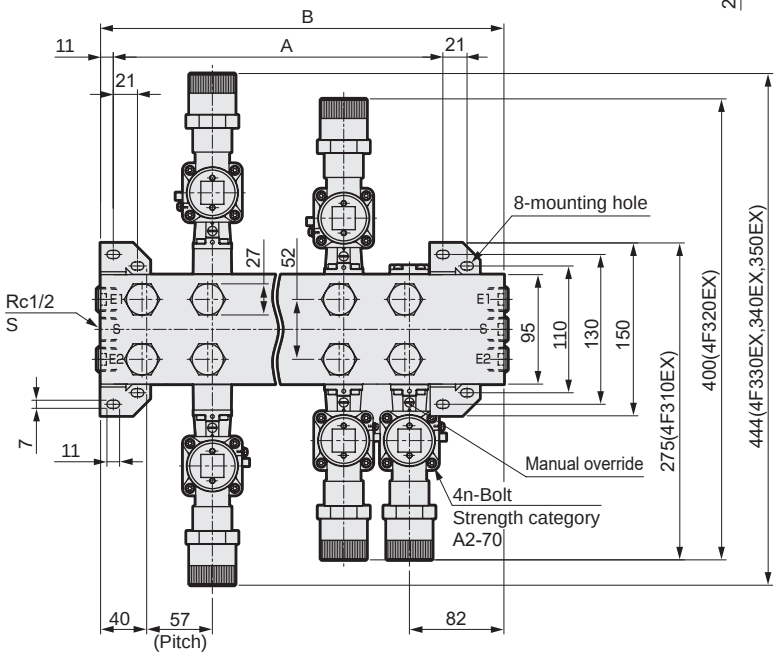

I: Z section with individual exhaust

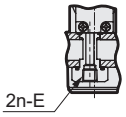

Station No.	2	3	4	5	6	7	8	9	10
A	115	172	229	286	343	400	457	514	571
B	179	236	293	350	407	464	521	578	635

Model No.	D	E	Discrete model No. for manifold
4F310EX-08	Rp1/4	Rc1/4	4F310EX 4F320EX 4F330EX 4F340EX 4F350EX
4F320EX-08			
4F330EX-08			
4F340EX-08			
4F350EX-08			
4F310EX-10	Rp3/8	Rc3/8	
4F320EX-10			
4F330EX-10			
4F340EX-10			
4F350EX-10			

Dimensions

M4F4*0EX-08-G*-*-C

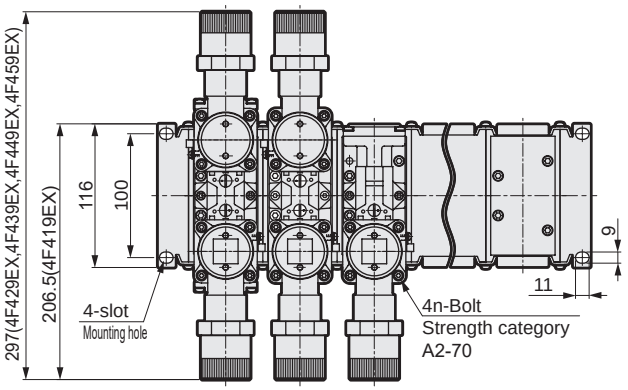

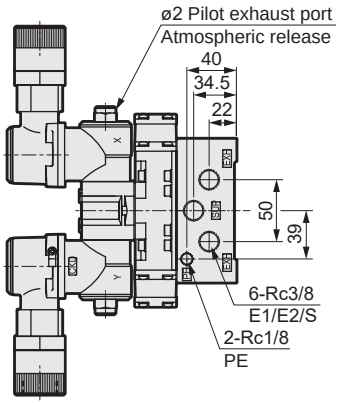

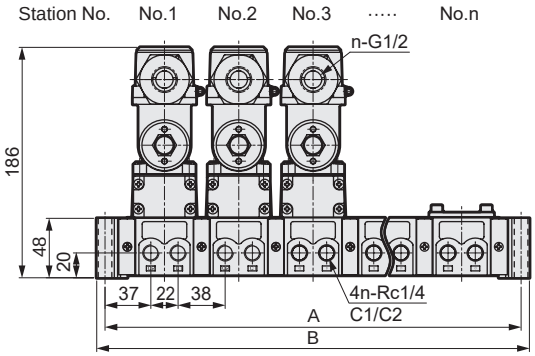

Station No.	2	3	4	5	6	7	8	9	10
A	156	216	276	336	396	456	516	576	636
B	169.4	229.4	289.4	349.4	409.4	469.4	529.4	589.4	649.4

Discrete model No. for manifold	
Solenoid valve	**4F419EX, 4F429EX, 4F439EX** **4F449EX, 4F459EX**

M4F5*0EX-10-G*-*-C

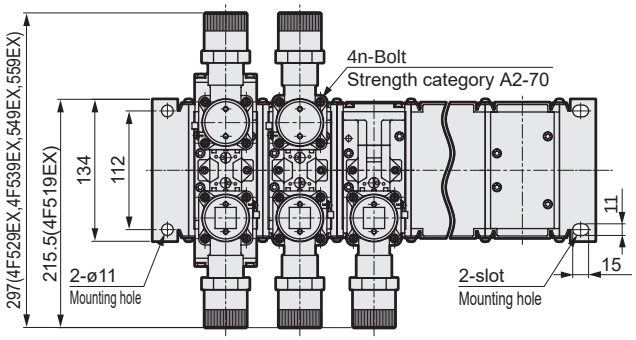

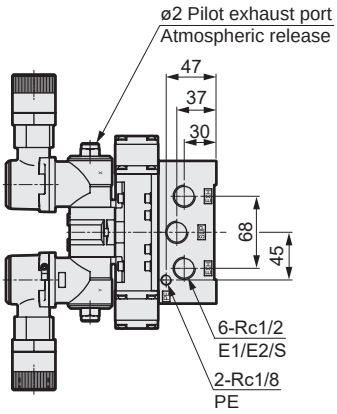

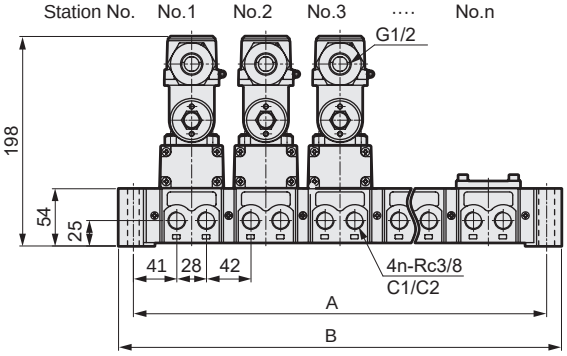

Station No.	2	3	4	5	6	7	8	9	10
A	180	250	320	390	460	530	600	670	740
B	208	278	348	418	488	558	628	698	768

Discrete model No. for manifold	
Solenoid valve	**4F519EX, 4F529EX, 4F539EX** **4F549EX, 4F559EX**

Dimensions

M4F6*0EX-15-G*-*-C

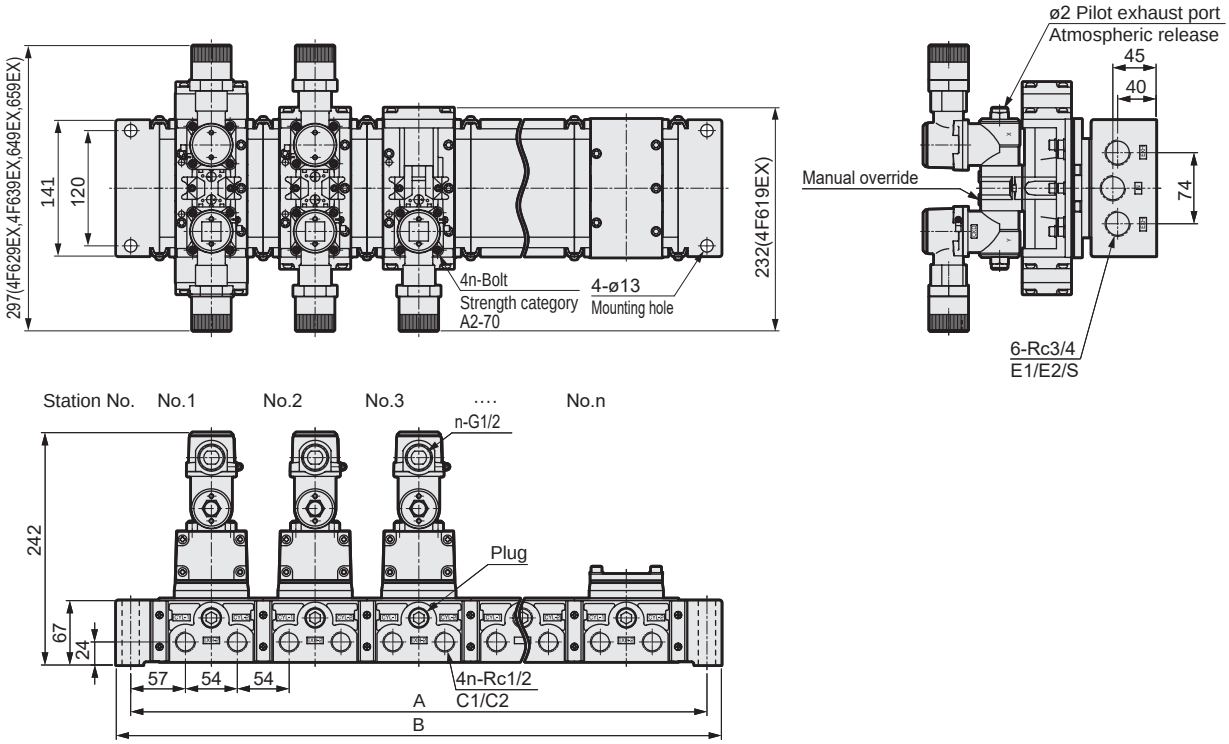

Station No.	2	3	4	5	6	7	8	9	10
A	276	384	492	600	708	816	924	1032	1140
B	306	414	522	630	738	846	954	1062	1170

Discrete model No. for manifold	
Solenoid valve	**4F619EX, 4F629EX, 4F639EX** **4F649EX, 4F659EX**

M4F7*0EX-20-G*-*-C

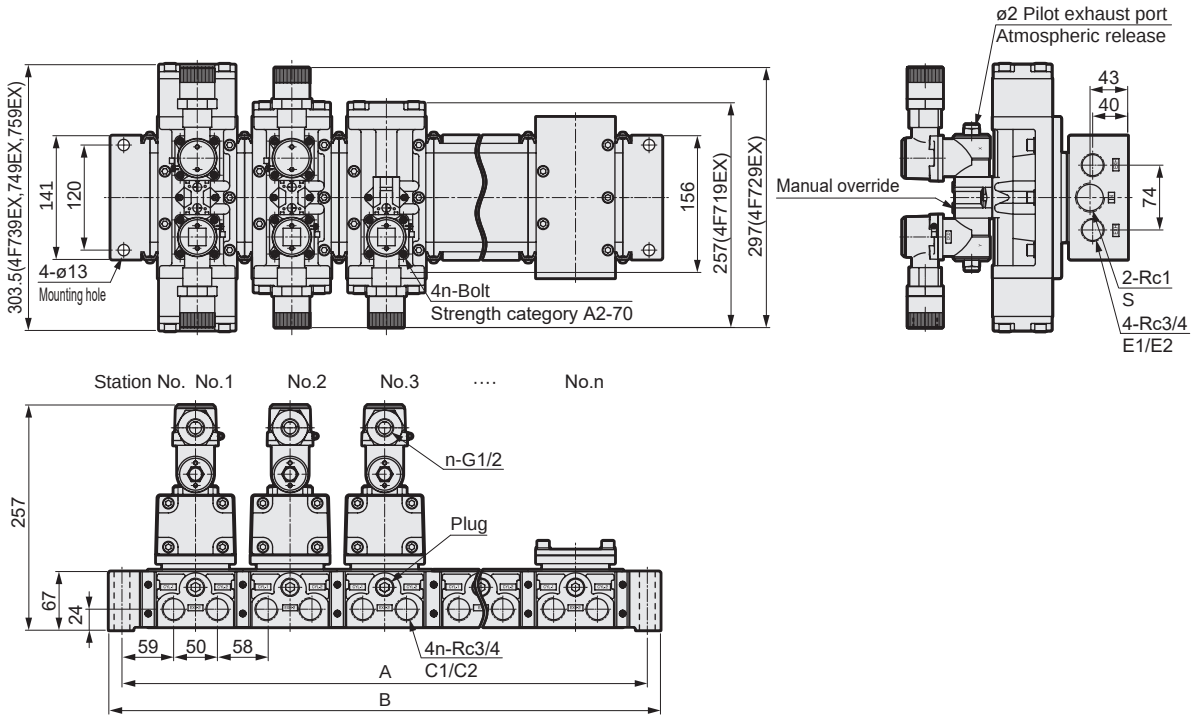

Station No.	2	3	4	5	6	7	8	9	10
A	276	384	492	600	708	816	924	1032	1140
B	306	414	522	630	738	846	954	1062	1170

Discrete model No. for manifold	
Solenoid valve	**4F719EX, 4F729EX, 4F739EX** **4F749EX, 4F759EX**

M4F**EX Manifold specifications sheet

Date issued / /

Company

Contact

Order No.

● Contact ● Quantity/set(s) ● Delivery date /

Slip No.	Orders No.

If instructions are provided for combinations of solenoid valves, changes of piping ports, etc., with this manifold specifications sheet, units will be delivered with the corresponding items assembled.Place to order with this specifications sheetand manifold model No., etc., contact CKD separately.

● Manifold model No.

M4F □ □ 0EX - □ - G □ - □ - □ - □ □ - □ - □

- □ (B): 3 to 7 — Solenoid position
- □ (C): Port size (C1/C2port)
- □ (D): Applicable cable O.D.
- □ (E): Option
- □ (F): Station No.
- □ (G): Exhaust method
- □ (H): Installation feet (For 4F3)
- □ (I): Voltage
- □ (J): Explosion-proof certification organ

Solenoid valve			Installation position										Subtotal	Total
	Model	Bore size	1	2	3	4	5	6	7	8	9	10		
2-position Single	4F □													
2-position Double	4F □													
3-position all Port block	4F □													
3-position A/B/R Connection	4F □													
3-position P/A/B Connection	4F □													
Masking plate														

MEMO

Safety Precautions

Be sure to read this section before use.
Refer to Intro Page 59 for general precautions for using valves.

Product-specific cautions: Pilot operated explosion-proof 5-port valve pneumatic valve 4F**0EX series

Design/selection

⚠ WARNING

■ Usable in Class 1 and 2 danger zones (Zone 1 and 2) where there is combustible gas or steam. Cannot be used in Class 0 special danger zone.

■ Select models and perform installation in accordance with JIS.C.60079 “Factory Explosion-Proof Guidelines for Users JNIOSH-TR-NO.44 (2012)”.

⚠ CAUTION

■ Explosive gas and explosion-proof enclosure

The degree of explosive gas danger is classified according to the group and temperature grade. Gases with equivalent risk are grouped into one group, and explosion-proof structure standards are set for each group.
Codes to indicate the type, group and temperature grade must be indicated in this order on the electrical components of explosion-proof structures. These codes indicate which group and temperature grade the electrical components have been manufactured for, and which gases can be used.
For the example of explosion-proof solenoid valve of Exd II BT4

ExdIIBT4X

- X: Specific working conditions
- T4: Temperature class T4
- IIB: Group II B
- Exd: Pressure and explosion proof structure

Table 2 indicates the classification of gases with a danger category of Group II B and Grade T4 temperature that are compatible with the product. Less dangerous gases are also listed that are guaranteed to be explosion-proof.
Temperature grade refers to the degree of ignition risk, and is classified into six grades according to the ignition point. It defines the maximum surface temperature of the device corresponding to each grade (Table 1).
Higher numbers indicate a higher risk that the gas will ignite at low igniting temperatures. Group refers to the risk of fire leaping to the exterior from small gaps. The level is classified into three grades according to the gap, and the codes shown in Table 1 are used. It can be said that this group expresses the classification by size of the explosive energy. Lower maximum safety clearance indicates more dangerous gases with higher explosive energy that can cause flames to pass through small gaps and leap to the exterior.

Table 1

Item	Code	Provision
Temperature grade	T1	Max. surface temperature: 450°C
	T2	300°C
	T3	200°C
	T4	135°C
	T5	100°C
	T6	85°C
Group	II A	Max. safety clearance: 0.9 mm or more
	II B	0.5 to 0.9
	II C	0.5 mm or less

Table 2

Temp class / Group	T1	T2	T3	T4	T5
II A	Acetone, Ammonia, Carbon monoxide, Ethane, Acetic acid, Ethyl acetate, Toluene, Propane, Benzene, Methanol, Methane	Ethanol, Isoamyl acetate, Butane, Acetic anhydride	Gasoline, Hexane	Acetaldehyde	
II B		Ethylene, Ethylene oxide		Ethyl ether	
II C	Hydrogen	Acetylene			Carbon disulfide

■ “X” in “explosion-proof Exd II BT4X” that represents “A2-70 grade bolt strength (bolts used in actuator assembly only)” and “allowable cable temperature of 85°C or more” has been omitted.

■ Dangerous zone

Situations where explosive gases and air mix at a high enough level to cause an explosion or fire are called “danger zones”. These zones are classified into Class 0 special danger zones, Class 1 danger zones and Class 2 danger zones according to the time and frequency at which the dangerous atmosphere is reached. The explosion-proof structure that can be used is determined according to these classes.

● Special danger zone (Zone 0) (4F explosion-proof Series cannot be used.)

Zones where a dangerous atmosphere is or could be continuously generated, and where the concentration of explosive gas is maintained continuously or for a long time above the lower limit for explosions.

Example a: The open space above a flammable fluid inside a container or tank
b: Inside a combustible gas container or tank
c: Near flammable fluid in an open container

● Class 1 special danger zone (Zone 1)

(1) Zones where explosive gas could accumulate to a dangerous concentration during operations such as the opening/closing of the lid for removing the product or operation of the safety valve, etc.
(2) Zones where explosive gases are likely to accumulate to dangerous concentrations during repair or maintenance or due to leakage, etc.

● Class 2 special danger zone (Zone 2)

(1) Zones where combustible gases or flammable fluids are regularly handled, but where the gases and fluids are sealed in a vessel or equipment, and where the gases and fluids could leak to dangerous concentrations only if the vessel or equipment breaks by accident or due to misoperation.

■ Conformity Certificate No.

Explosion-proof certification has been obtained with the pilot actuator assembly. The test model and product model No. of the pilot actuator assembly are as listed in the table below.

(Example)

Product model No.	Test model
4F310EX to 4F350EX-G*	EX3-GP
4F410EX to 4F710EX-G*	EX4-GP
4F420EX to 4F720EX-G*	EX5-GP
4F430EX to 4F730EX-G*	
4F440EX to 4F740EX-G*	
4F450EX to 4F750EX-G*	

■ Under the present local laws, solenoid valve units that are CKD Taiwan certified cannot be exported to anywhere else from Japan except to CKD Taiwan. However, if the components are assembled within an equipment, that equipment can be exported to countries other than Taiwan.

Mounting, installation and adjustment

1. Piping

⚠ CAUTION

■ A pilot exhaust hole is provided on the pilot actuator. Contact CKD before using this product if problems could occur from the exhaust, such as in a clean room.

2. Wiring

⚠ WARNING

■ Packing size (numerical packing value): there are 4 types as indicated below.

(In the case of "KR" or "TW", ø8.5−9.5, ø9.5−10.5, ø10.5−11.5)

Be sure to use a cable diameter that is within the Packing value range. If the packing size and cable sizes are mismatched, the explosion-proof function will be impaired.

Bracket kit 4F310EX-G□-GLAND-KIT-□

Code	Cable diameter
9	ø7.5 to 9.5 (In the case of "KR" "TW", ø8.5 to 9.5)
10	ø9.5 to 10.5
11	ø10.5 to 11.5
13	ø11.5 to 13.5 (In the case of "KR" "TW", N/A)

Packing kit 4F310EX-G□-PACKING-KIT-□

Code	Cable diameter
9	ø7.5 to 9.5 (In the case of "KR" "TW", ø8.5 to 9.5)
10	ø9.5 to 10.5
11	ø10.5 to 11.5
13	ø11.5 to 13.5 (In the case of "KR" "TW", N/A)

⚠ CAUTION

■ Check for leakage current to avoid malfunction caused by leakage current from other fluid control components.

● When absorbing a surge voltage with the CR circuit and using a PLC that protects the switching element, be careful as a leakage current will flow through the CR element and negatively affect product operation.

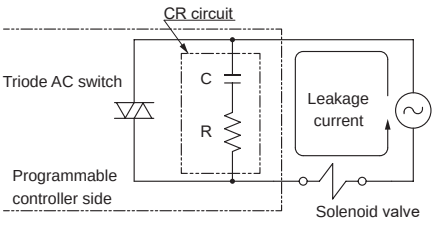

Be sure to keep the size of the residual leakage current
4.0 mA or less with 12 to 127 VAC,
2.0 mA or less with 200 to 380 VAC,
1.5 mA or less with 12 to 48 VDC, and
0.6 mA or less with 80 to 125 VDC.

■ Wiring

● Install wiring in accordance with JIS explosion-proof guidelines.

● Remove the terminal box cap with the attached tools for disassembly and install the wiring. Use the tools specified in the following diagram for crimping the crimp terminals upon wiring. After finishing wiring, securely tighten the terminal box cap.
Keep the disassembly tools for future maintenance.

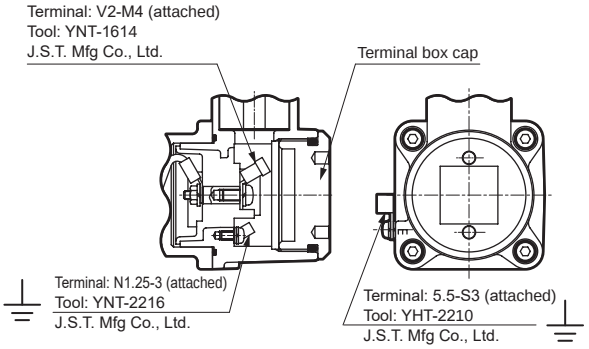

■ Be sure to use a cable with temperature rating of 85°C or more.

■ Tightening the gland

1. Pass the cable through (1) connector cap, (2) gland, (4) spacer, (5) packing and (4) spacer, and connect to (6) terminal box.
2. Insert (4) spacer, (5) packing and (4) spacer to (6) terminal box, and screw (2) gland into (6) terminal box with 40 to 44 N·m of torque until the gap is eliminated.
3. Be sure to tighten (3) low head hexagon socket set screws to prevent (2) glands from loosening.
4. Tighten (7) holder using (8) low head hexagon socket bolt x 2 and spring washers x 2 with 1.9 to 2.0 N·m of torque to hold the cable.
5. Tighten (1) connector cap until it comes in contact with (2) gland.

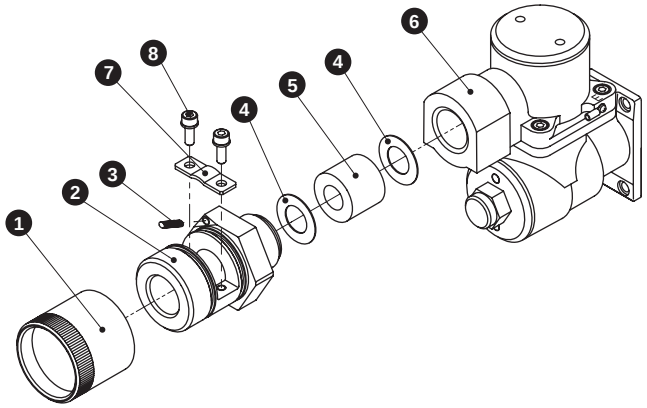

● Be sure that the spacer does not get caught in the threaded portion of the terminal box.
It may cause insufficient tightening of gland or make it impossible to disassemble.

● Be sure to replace the used packing and not reuse it.

Use/maintenance

⚠ WARNING

■ With the pilot actuator assembly, do not disassemble anything other than the gland parts and the terminal box cap (as performance of the explosion-proof enclosure cannot be guaranteed if the unit has been disassembled.)
As explosion-proof certification has been obtained with the pilot actuator assembly, perform replacement of the coil with the pilot actuator assembly.

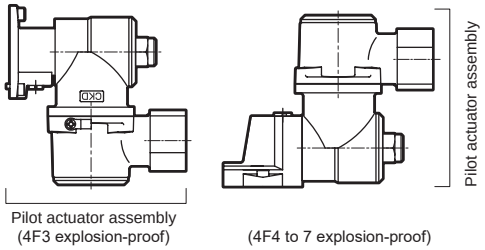

■ Manual override
As the manual override is equipped with a lock, turn this OFF when it will not be in use. For use, turn with a flathead ⊖ screwdriver.

● **4F3**
OFF : Align “C” with the large arrow.
ON : Turn clockwise until “O” stops at large arrow.
(Note: Arrow and “O” may not align with each other)

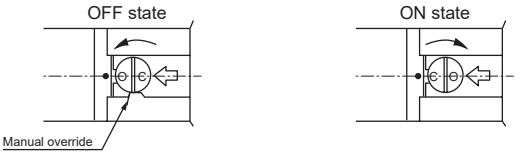

● **4F4/5/6/7**
0 ..... OFF: Align ● and “0”
1 ..... Turn dial clockwise until it stops.
(Note: 1 and ● may not align with each other)

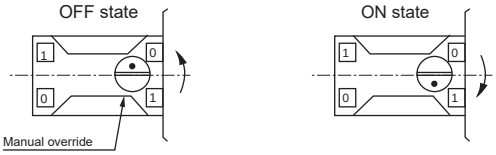

4F**0E

Pneumatic valve

Pilot operated explosion-proof 5-port valve

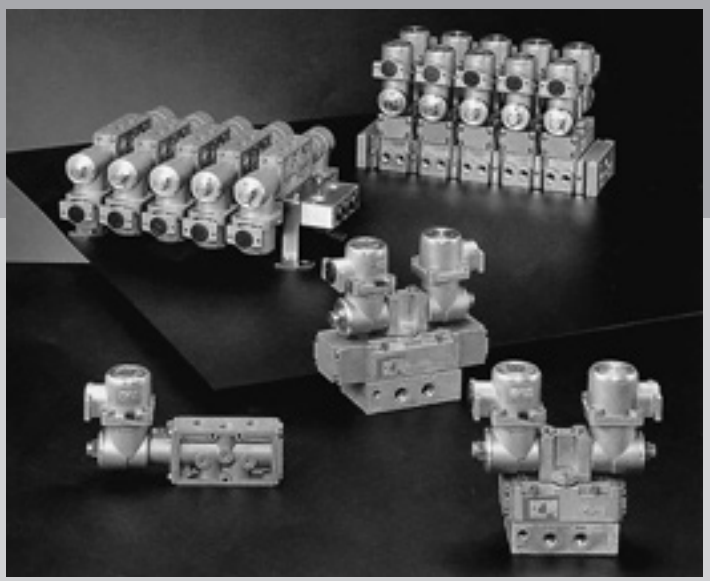

Overview

The 4F Series explosion-proof 5-port valve is a high performance series that supports safe use in dangerous atmospheres with compact design and ease of use. Suitable for operating cylinders of ø63 to ø250

Features

Explosion-proof performance d2G4

Pressure and explosion proof construction/flame-proof grade 2/ignitability G4

Japan Certification Type Test Qualification No...

Class A: No. T64364

Class H: No. T64363

China Conformity Certificate No. (CCC)

2020322307002070

China explosion-proof standard NEPSI acquired

GYB20.2251X

Lightweight and compact

Weight has been reduced to less than 1/2.

(compared to CKD conventional products)

Easy wiring

Compatible with outdoor use

TP is compliant with JIS rainproof structures

Usable outdoors.

Energy saving type

Low wattage (4.5 W) and capable of use with no lubrication.

CONTENTS

Series variation	1808
Discrete valve	
● Body piping (4F3*0E)	1810
● Sub-plate piping (4F4 to 7*0E)	1810
● Body piping NAMUR standard option (4F1/3*0E)	1822
Individual wiring manifold	
● Body piping (M4F3*0E)	1824
● Sub-plate piping (M4F4 to 7*0E)	1824
Manifold specifications sheet	1832
⚠ Safety precautions	1834

Series external appearance				Model No.	Position Number of solenoids JIS symbol	Flow characteristics: C [dm³/(s·bar)] *1	Flow characteristics: Effective cross-sectional area S (mm²)	Applicable cylinder bore size	
Discrete	4F**OE 	Direct	5-port	4F3*0E	● 2-position/single 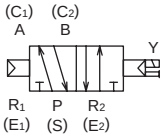	3.9 to 5.8	-	ø63 to ø100	
		Sub-plate		4F4*0E		5.0 to 5.3	-	ø63 to ø100	
				4F5*0E	● 2-position/double 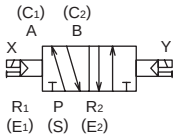	9.7 to 10	-	ø80 to ø160	
				4F6*0E		15 to 18	-	ø140 to ø200	
				4F7*0E	● 3-position/all ports closed 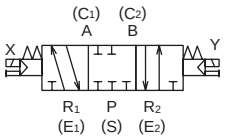	-	160	ø180 to ø250	
Manifold	M4F**OE 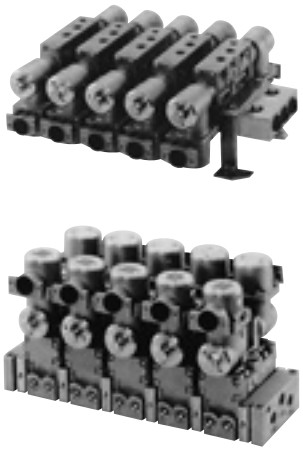	Direct	5-port	M4F3*0E		3.9 to 5.8	-	ø63 to ø100	
		Sub-plate		M4F4*0E	● 3-position/ABR connection 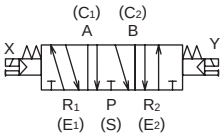	5.0 to 5.3	-	ø63 to ø100	
				M4F5*0E		9.7 to 10	-	ø80 to ø160	
				M4F6*0E	● 3-position/PAB connection 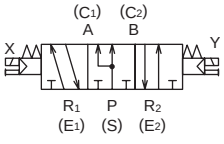	15 to 18	-	ø140 to ø200	
				M4F7*0E		-	160	ø180 to ø250	

*1: Effective cross-sectional area S and sonic conductance C are converted as S ≈ 5.0 x C.

	Switching position						Port size of A/B port						Option		Thermal class		Page
							Female thread						External wire pull		A	H	
	2-position single	2-position double	3-position all ports closed	3-position A/B/R connection	3-position P/A/B connection	Mix	Rp1/4	Rp3/8	Rc1/4	Rc3/8	Rc1/2	Rc3/4	Pressure-proof packing protection pipe screw-in GP	Conduit thread system TP			
	●	●	●	●	●		●	●					●	●	●	●	1810
	●	●	●	●	●				●	●			●	●	●	●	
	●	●	●	●	●					●	●		●	●	●	●	
	●	●	●	●	●						●	●	●	●	●	●	
	●	●	●	●	●							●	●	●	●	●	
	●	●	●	●	●	●	●	●					●	●	●	●	1824
	●	●	●	●	●	●			●				●	●	●	●	
	●	●	●	●	●	●				●			●	●	●	●	
	●	●	●	●	●	●					●		●	●	●	●	
	●	●	●	●	●	●						●	●	●	●	●	

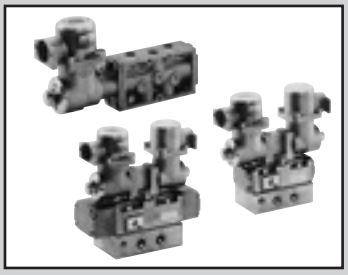

Discrete valve
Pilot operated explosion-proof 5-port valve pneumatic valve

4F**0E Series

- Japan Conformity Certificate No.
  Class A: No. T64364
  Class H: No. T64363
- China Conformity Certificate No. (CCC) 2020322307002070
- China explosion-proof type (NEPSI) GYB20.2251X
- Cylinder bore size: ø63 to ø250

RoHS CAD

JIS symbol

2-position/single

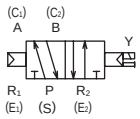

2-position/double

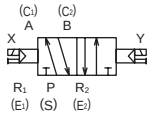

3-position/all ports closed

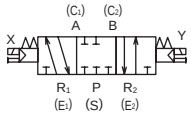

3-position/ABR connection

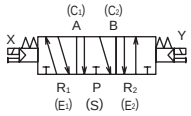

3-position/PAB connection

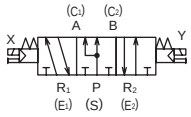

Common specifications

Item	Description
Valve and operation	Pilot operated soft spool valve
Working fluid	Compressed air
Max. working pressure MPa	1.0
Min. working pressure MPa	Refer to Individual specifications listed below
Proof pressure MPa	1.5
Ambient temperature °C (*1)	-10 to 60(no freezing)
Fluid temperature °C	5 to 60
Lubrication	Not required (use turbine oil ISO VG32 if necessary for lubrication)
Explosion-proof performance	d2G4
Manual override	Locking
Vibration resistance m/s^2	50 or less
Shock resistance m/s^2	300 or less
Atmosphere	Cannot be used in corrosive gas environment.

*1:The ambient temperature indicates the temperature for storage and upon installation, which will differ from the fluid temperature during operation.

Electrical specifications

Item			Description
Rated voltage	AC		100V,200V,110V,220V(50/60Hz)
	DC		24V, 12V
Voltage fluctuation range			±10%
Starting current A	AC	100V	0.186/0.135
		200V	0.093/0.068
		110V	0.169/0.123
		220V	0.085/0.061
	DC	24V	0.166
		12V	0.332
Holding current A	AC	100V	0.06/0.05
		200V	0.03/0.025
		110V	0.055/0.045
		220V	0.027/0.023
	DC	24V	0.166
		12V	0.332
Power consumption W	AC	100V	4.5/4.0
		200V	4.5/4.0
		110V	4.5/4.0
		220V	4.5/4.0
	DC	24V	4.0
		12V	4.0
Thermal class			A (*1, H)

*1:Thermal class H is available as an option. The dimensions are the same as those of A.

Individual specifications

Item			4F3	4F4	4F5	4F6	4F7
Min. working pressure MPa	2-position	Single	0.1	0.1	0.1	0.15	0.15
		Double					
	3-position	All ports closed	0.15	0.15	0.15		
		A/B/R connection					
		P/A/B connection					
Port size (*1)	Air supply port S, cylinder port C		Rp1/4,Rp3/8	Rc1/4,Rc3/8	Rc3/8,Rc1/2	Rc1/2,Rc3/4	Rc3/4,Rc1
	Exhaust port E		Rp1/4,Rp3/8	Rc1/4,Rc3/8	Rc3/8,Rc1/2	Rc1/2,Rc3/4	Rc3/4,Rc1
	Pilot exhaust port (PE)		(Rp1/8)	(Rc1/8)	(Rc1/8)	(Rc1/4)	(Rc1/4)

*1: NPT threads can also be used for piping port. Contact CKD for details.
(However, the external wire inlet is G1/2.)

Performance/characteristics by model

Item	4F3	4F4	4F5	4F6	4F7
Response time ms (*1)	100	120	140	400	600

*1: The response times are values with working pressure of 0.5 MPa, without lubrication, and with the power ON. They depend on the pressure and the lubricant quality.

Weight

Item			4F3	4F4	4F5	4F6	4F7
Weight kg (*1)	2-position	Single	0.80	1.16	1.41	2.08	3.62
		Double	1.24	1.61	1.90	2.58	4.10
	3-position		1.45	1.78	2.16	2.96	5.12

*1: The weight is the value for TP. For the weight of GP, add 0.07 x (number of pilot actuators) kg.

Flow characteristics

Model No.	Solenoid position		Port size	C[dm³/(s·bar)]	b	S(mm²)
4F3	2-position	Single	Rp1/4	3.9	0.42	-
		Double				
	3-position	All ports closed		4.0	0.35	
		A/B/R connection		4.5	0.42	
		P/A/B connection		4.0	0.35	
	2-position	Single	Rp3/8	5.8	0.42	
		Double				
	3-position	All ports closed		4.4	0.42	
		A/B/R connection		5.1	0.46	
		P/A/B connection		4.4	0.42	
4F4	2-position	Single	Rc1/4 Rc3/8	5.0	0.21	-
		Double				
	3-position	All ports closed		4.7	0.24	
		A/B/R connection		5.3	0.29	
		P/A/B connection		5.3	0.29	
4F5	2-position	Single	Rc3/8 Rc1/2	10.0	0.32	-
		Double				
	3-position	All ports closed		9.7	0.28	
		A/B/R connection		9.8	0.25	
		P/A/B connection				
4F6	2-position	Single	Rc1/2 Rc3/4	18.0	0.31	-
		Double				
	3-position	All ports closed		15.0	0.23	
		A/B/R connection				
		P/A/B connection				
4F7	2-position	Single	Rc3/4 Rc1	-	-	160
		Double				
	3-position	All ports closed				
		A/B/R connection				
		P/A/B connection				

*1: Effective cross-sectional area S and sonic conductance C are converted as S ≈ 5.0 x C.

Specifications for rechargeable battery

● For use in the rechargeable battery manufacturing process, materials used for air path and sliding section are limited; inquire with CKD for model numbers.

How to order

● Pneumatic explosion-proof 5-port valve

4F3 1 0 E- 08 - T P- P - X - AC100V - ( )

Ⓐ Model No. | Ⓑ Solenoid position | Ⓒ Port size | Ⓓ External wire pull method | Ⓔ Option | Ⓕ Thermal class | Ⓖ Voltage (*1) | Ⓗ Organizations for explosive-proof certification

Code	Description	Ⓐ Model No. 4F3	4F4	4F5	4F6	4F7
Ⓑ Solenoid position						
1	2 position single	●	●	●	●	●
2	2-position double	●	●	●	●	●
3	3-position all ports closed	●	●	●	●	●
4	3-position ABR connection	●	●	●	●	●
5	3-position PAB connection	●	●	●	●	●
Ⓒ Port size						
08	Rp1/4 (for 4F3), Rc1/4	●	●			
10	Rp3/8 (for 4F3), Rc3/8	●	●	●		
15	Rc1/2			●	●	
20	Rc3/4				●	●
25	Rc1					●
08N	NPT1/4	●	●			
10N	NPT3/8	●	●	●		
15N	NPT1/2			●	●	
20N	NPT3/4				●	●
25N	NPT1					●
08G	G1/4	●	●			
10G	G3/8	●	●	●		
15G	G1/2			●	●	
20G	G3/4				●	●
25G	G1					●
Ⓓ External wire pull method						
G	Pressure proof packing protection pipe screw-in *3	●	●	●	●	●
T	Conduit thread system	●	●	●	●	●
Ⓔ Option						
Blank	No option	●	●	●	●	●
P	Installation feet L-bracket (for 4F3 2-position single) installation feet U type bracket (for 4F4 to 4F7)	●	●	●	●	●
P1	Installation feet U type bracket (for 2-position double solenoid/3-position)	●				
H	Check valve attached (dedicated for 3-position all ports closed)	●	●	●	●	●
N	Plug included (for 3-port valve)	●	●	●	●	●
R	Position change of manual override	●				
NC	3-port valve specifications plug assembly (C1 (A), E1 (R1) assembly)	●	●	●	●	●
NO	3-port valve specifications plug assembly (C2 (B), E2 (R2) assembly)	●	●	●	●	●
Ⓕ Thermal class						
Blank	A (standard product)	●	●	●	●	●
X	H (Option)	●	●	●	●	●
Ⓖ Voltage						
AC100V	100 VAC (50/60 Hz)	●	●	●	●	●
AC200V	200 VAC (50/60 Hz)	●	●	●	●	●
DC24V	24 VDC	●	●	●	●	●
DC12V	12 VDC	●	●	●	●	●
AC110V	110 VAC (50/60 Hz)	●	●	●	●	●
AC220V	220 VAC (50/60 Hz)	●	●	●	●	●
*** Other made-to-order products**						
[AC voltage]						
12V, 24V, 48V, 115V, 120V, 125V, 127V, 210V, 230V, 240V, 250V,380V		●	●	●	●	●
[DC voltage]						
45V, 48V, 80V, 100V, 110V, 125V		●	●	●	●	●
Ⓗ Organizations for explosive-proof certification						
Blank	Japan Certification (TIIS)	●	●	●	●	●
CN	China Compulsory Certificate (CCC)	●	●	●	●	●

Precautions for model No. selection

*1:Only the following voltage products are available as made to order.(There are no certifications for other than the listed voltage.)

Voltage	AC[V](50/60 Hz)	12, 24, 48, 115, 120, 125, 127, 210, 230, 240, 250, 380
	DC[V]	45, 48, 80, 100, 110, 125

*2:Order coils as a pilot actuator assembly.

*3:In order to ensure explosion-proof specifications, select a cable from the following for use with type G.

Cable type	No. of cores	Nominal section area	Wire config	Finished outer ø
Polyethylene cable (EV)	2-conductor	2 mm^2	7/0.6	ø10.5
600 V vinyl insulation vinyl Sheath cable (VV)	2-conductor	2 mm^2	7/0.6	ø10.5
Control vinyl insulation vinyl Sheath cable (CVV)	2-conductor	2 mm^2	7/0.6	ø10.5

[Example of model No.]

4F410E-10-GP-P-X-AC100V

Ⓐ Model No. : Pilot operated explosion-proof 5-port valve
Ⓑ Solenoid position : 2-position single
Ⓒ Port size : Rc3/8
Ⓓ External wire pull method : Pressure-proof packing protection pipe screw-in
Ⓔ Option : Installation feet U type bracket
Ⓕ Thermal class : H
Ⓖ Voltage : 100 VAC

Internal structure and parts list

4F310E

● 2-position single

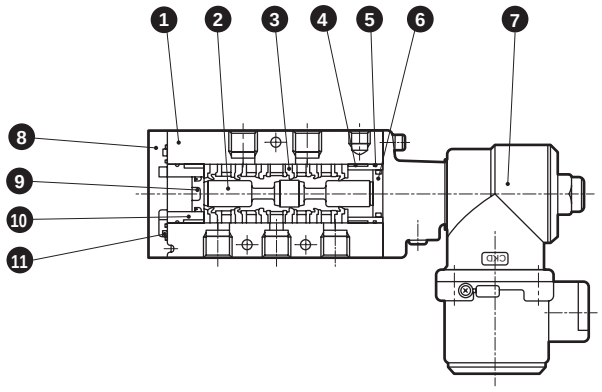

4F320E

● 2-position double

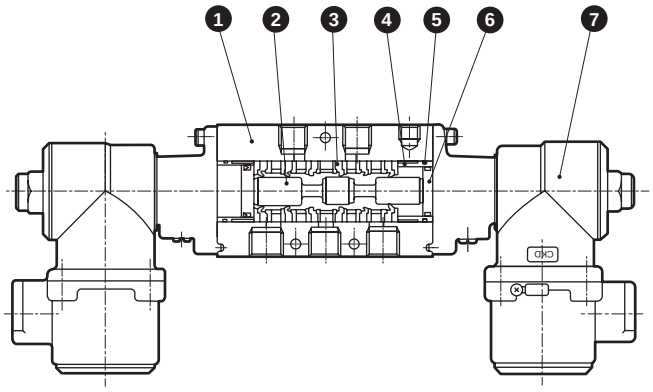

4F330E/4F340E/4F350E

● 3-position
All ports closed
A/B/R connection
P/A/B connection

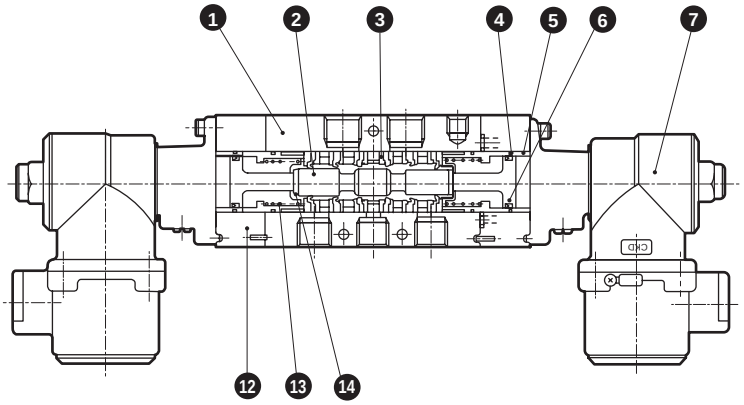

Main parts list

No.	Part name	Material
1	Body	Aluminum alloy die-casting
2	Spool	Aluminum alloy
3	Sealant assembly	-
4	Cylinder (A) (large)	Aluminum alloy
5	O-ring	Nitrile rubber
6	Piston assembly (A) (large)	-
7	Actuator assembly	*1
8	Cap	Aluminum alloy die-casting
9	Piston assembly (B) (small)	-
10	Cylinder (B) (small)	Aluminum alloy
11	Gasket	Nitrile rubber
12	Body block	Aluminum alloy die-casting
13	Spring	Piano wire
14	Spring seat	Stainless steel

Repair parts list

No./part name / Model No.	3 6 9 Repair parts kit	3 Sealant Assy	6 Piston Assy (A) (L)	9 Piston Assy (B) (S)
4F310E	4F310-K	4F9-106	4F9-104	4F9-103
4F320E	4F320-K			-
4F330E	4F330-K		4F9-114	-
4F340E				-
4F350E				-

*1 (Actuator assembly model No.)
4F3$\frac{1}{3}$0E-Ⓓ P-Ⓕ-Ⓖ
Select from How to order on page 1812.

Internal structure and parts list

4F$^{4}_{5}_{6}_{7}$10E

● 2-position single

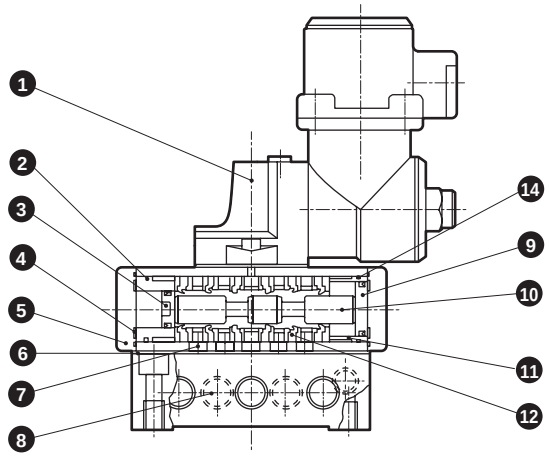

4F$^{4}_{5}_{6}_{7}$20E

● 2-position double

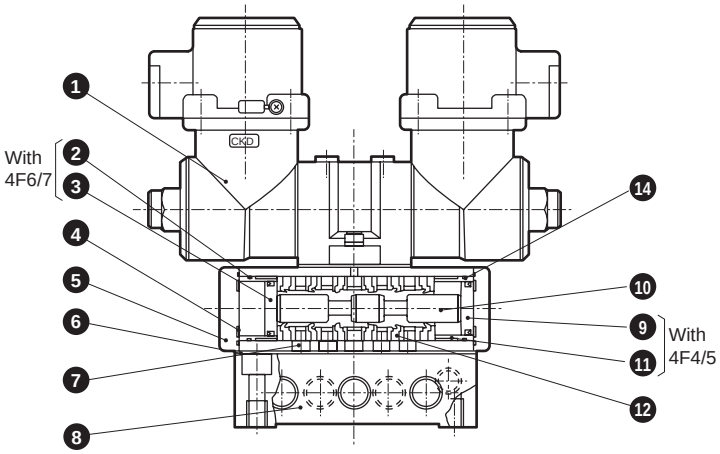

4F$^{4}_{5}_{6}_{7}$30E/4F$^{4}_{5}_{6}_{7}$40E/4F$^{4}_{5}_{6}_{7}$50E

● 3-position
All ports closed
A/B/R connection
P/A/B connection

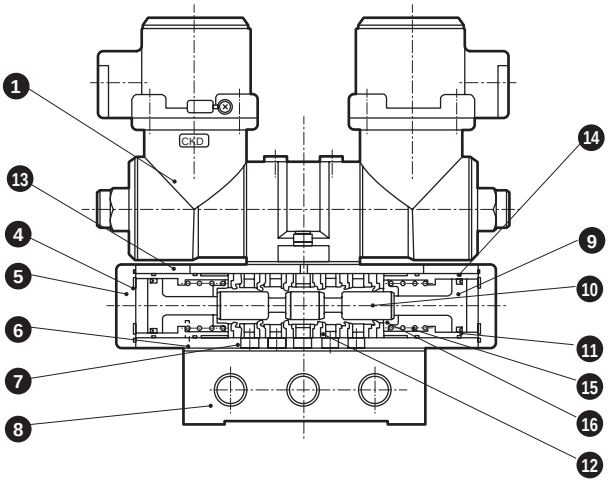

Main parts list

No.	Part name	Material
1	Actuator assembly	*1
2	Cylinder (B) (small)	Aluminum alloy
3	Piston assembly (B) (small)	-
4	Gasket	Nitrile rubber
5	Cap	Aluminum alloy die-casting
6	Sub-plate gasket	Nitrile rubber
7	Body	Aluminum alloy die-casting
8	Sub-plate	Aluminum alloy die-casting
9	Piston assembly (A) (large)	-
10	Spool	Aluminum alloy
11	Cylinder (A) (large)	Aluminum alloy
12	Sealant assembly	-
13	Body block	Aluminum alloy die-casting
14	O-ring	Nitrile rubber
15	Spring	Piano wire
16	Spring seat	Stainless steel

*1 (Actuator assembly)
4F4$\frac{1}{2}$0E-Ⓓ P-Ⓕ-Ⓖ
Select from How to order on page 1812.

Repair parts list

No./part name	9 12 3	9	12	3
Model No.	Repair parts kit	Piston Assy (A) (L)	Sealant Assy	Piston Assy (B) (S)
4F410E	4F410-K	4F9-104	4F9-106	4F9-103
4F420E	4F420-K			-
4F430E	4F430-K	4F9-114		-
4F440E				-
4F450E				-
4F510E	4F510-K	4F9-108	4F9-107	4F9-109
4F520E	4F520-K			-
4F530E	4F530-K	4F9-115		-
4F540E				-
4F550E				-
4F610E	4F610-K	4F9-117	4F9-118	4F9-116
4F620E	4F620-K	-		
4F630E	4F630-K	4F9-122		-
4F640E				-
4F650E				-
4F710E	4F710-K	4F9-121	4F9-119	4F9-120
4F720E	4F720-K	-		
4F730E	4F730-K	4F9-123		-
4F740E				-
4F750E				-

MEMO

Dimensions CAD

4F310E

● 2-position single

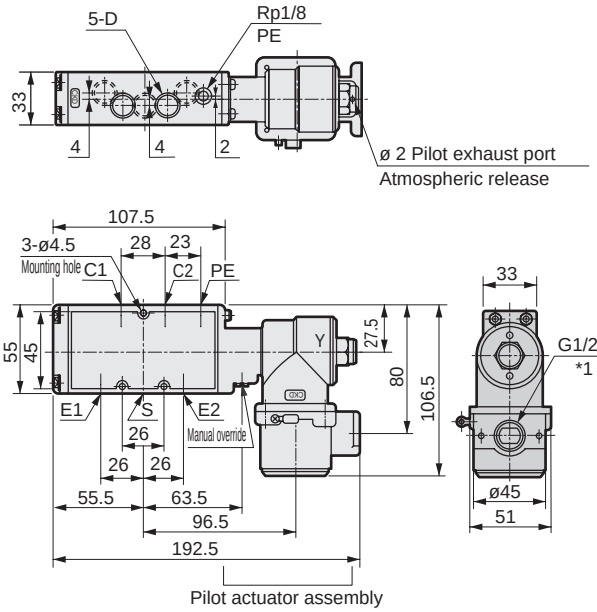

4F320E

● 2-position double

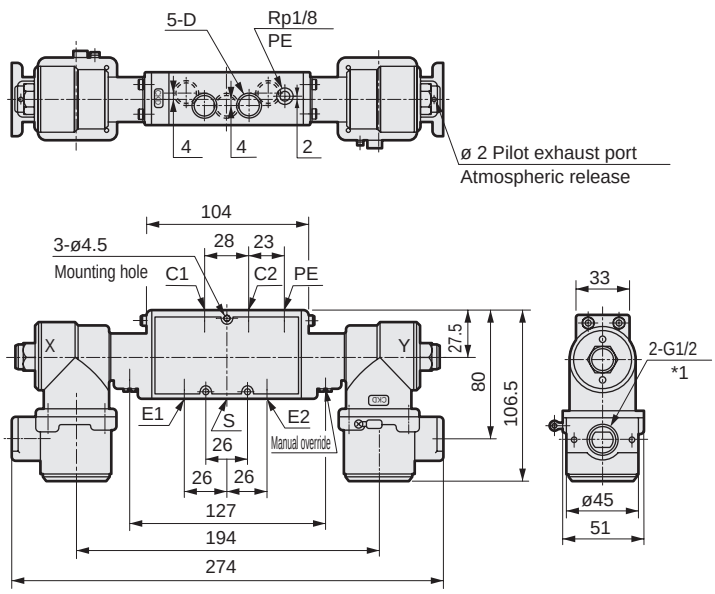

Model No.	D
*-08	Rp1/4
*-10	Rp3/8

*1 If model No. "-CN", it will be NPT1/2.

4F330E

● 3-position all ports closed

4F340E

● 3-position A/B/R connection

4F350E

● 3-position P/A/B connection

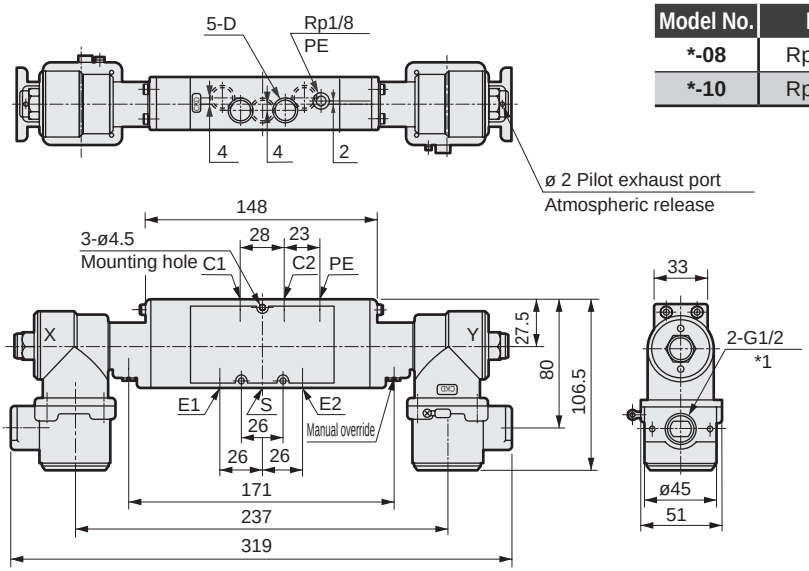

Model No.	D
*-08	Rp1/4
*-10	Rp3/8

● Position change of manual override(R)

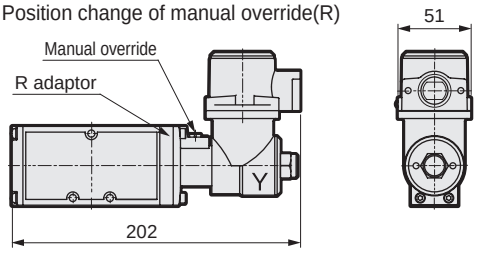

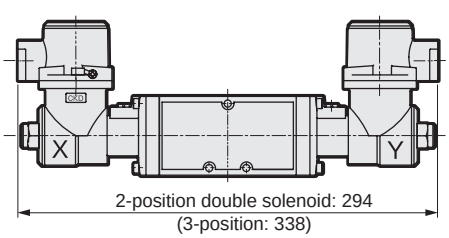

● L type installation feet(P) SingleDedicated
material:Cold-rolled steel plates (SPCC)
Zinc plated

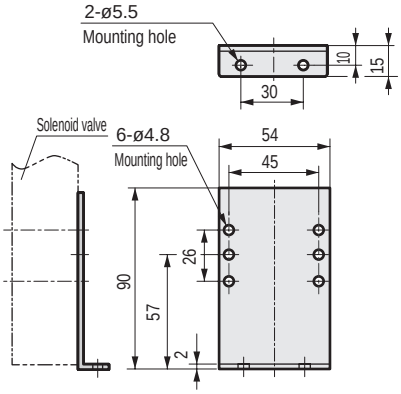

● U type installation feet (P1)
Material:Cold-rolled steel plates (SPCC)
Zinc plated

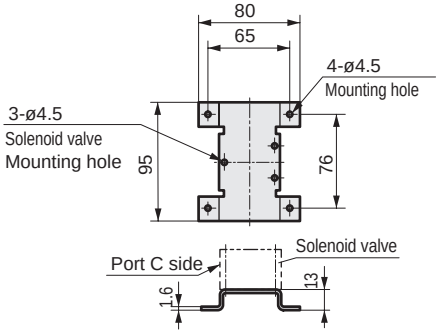

Dimensions CAD

4F410E

● 2-position single

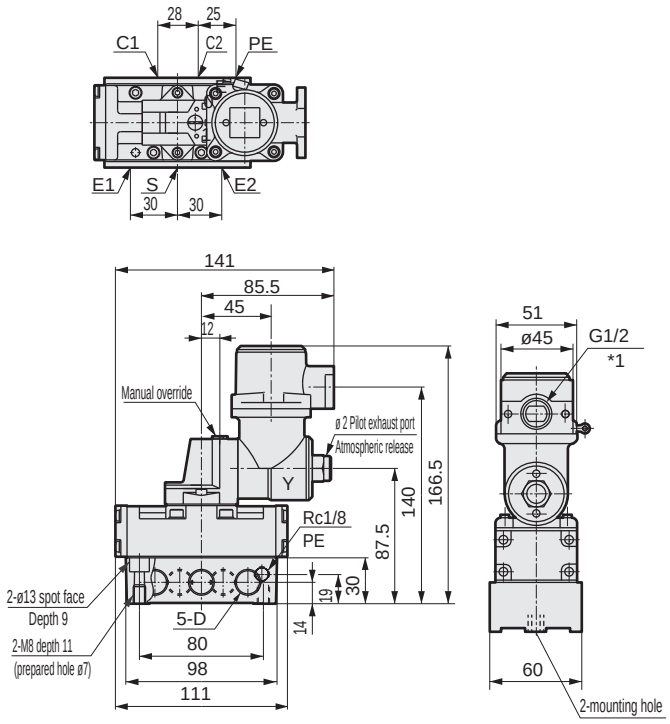

Model No.	D
*-08	Rc1/4
*-10	Rc3/8

*1 If model No. "-CN", it will be NPT1/2.

4F420E

● 2-position double

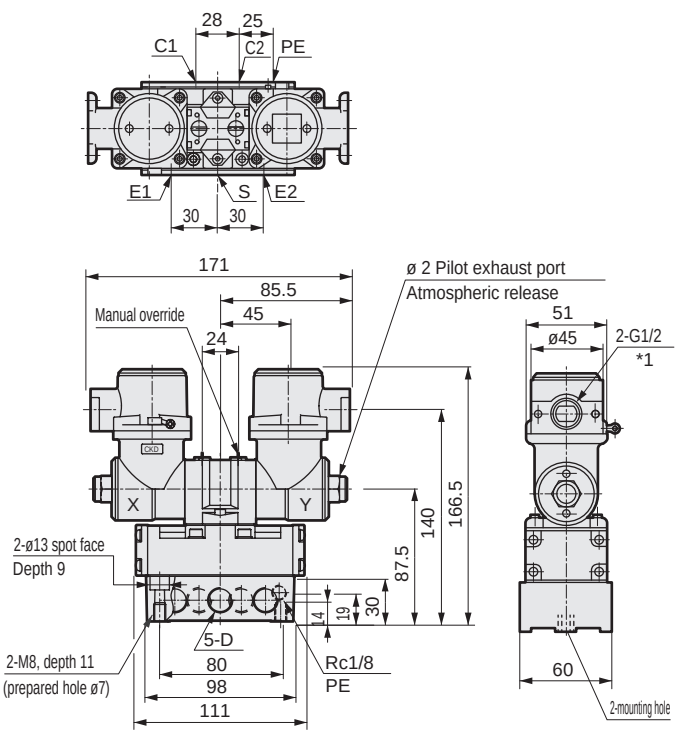

4F430E

● 3-position all ports closed

4F440E

● 3-position A/B/R connection

4F450E

● 3-position P/A/B connection

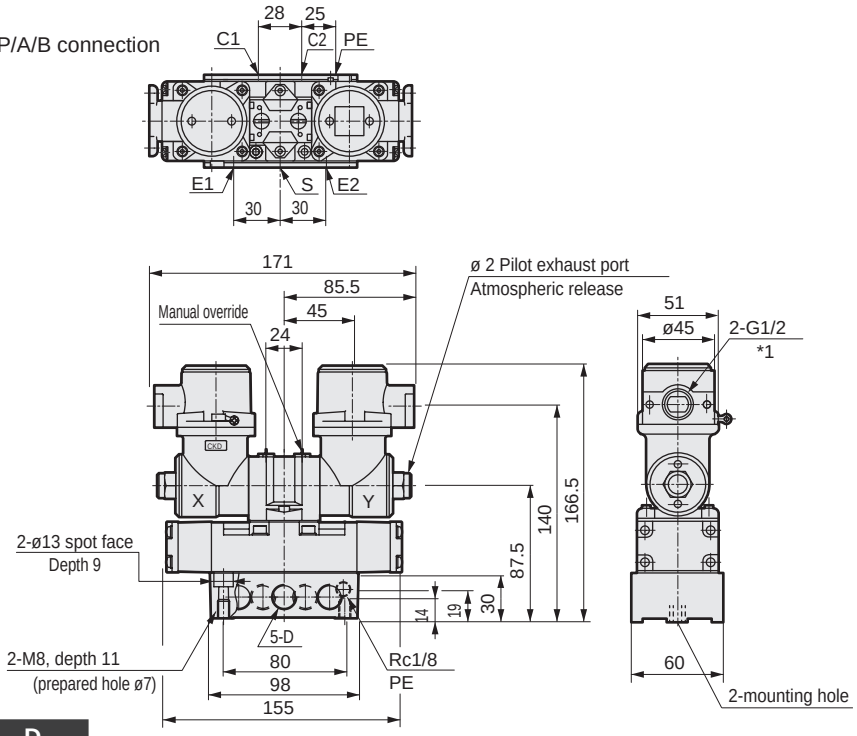

Model No.	D
*-08	Rc1/4
*-10	Rc3/8

● U type installation feet (P)
Material:HOT-ROLLED STEEL SHEET
ZINC PLATED TREATMENT

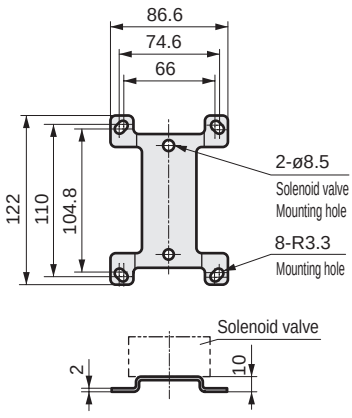

Dimensions CAD

4F510E

● 2-position single

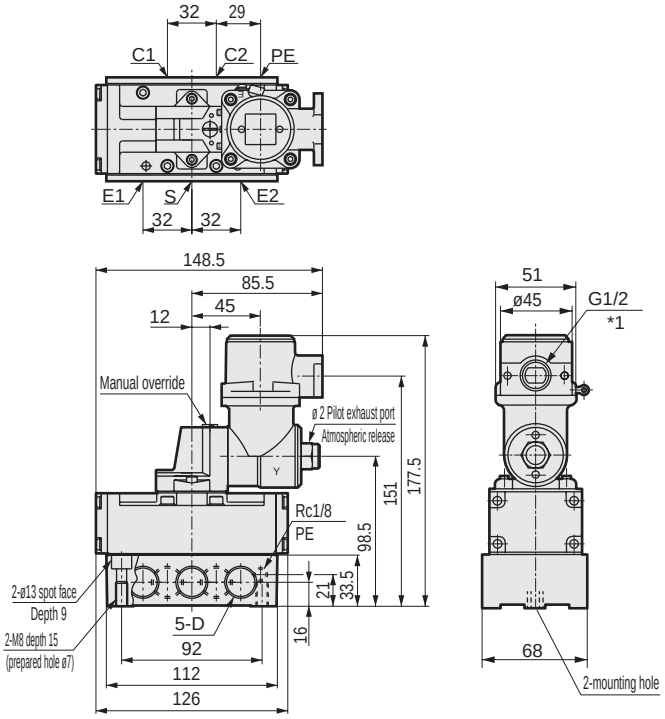

Model No.	D
*-10	Rc3/8
*-15	Rc1/2

*1 If model No. "-CN", it will be NPT1/2.

4F520E

● 2-position double

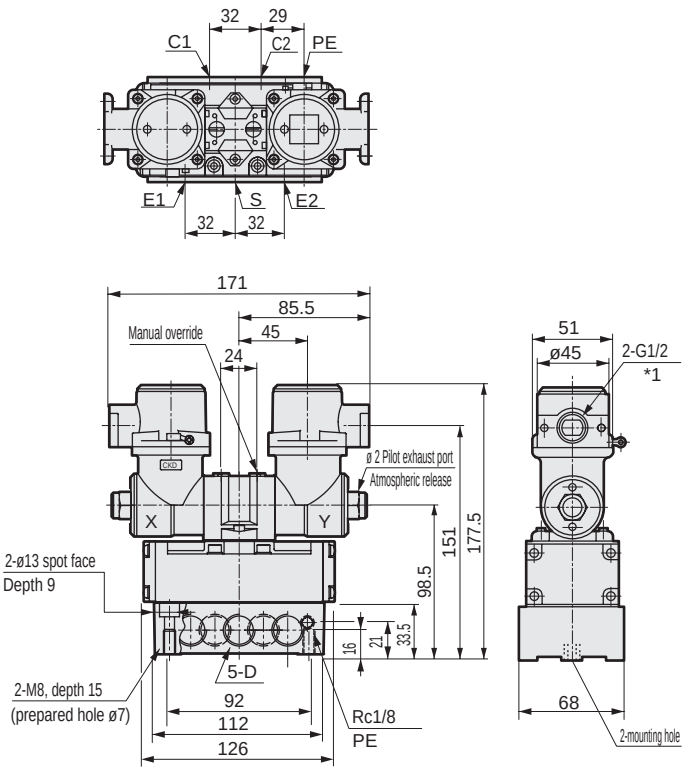

4F530E

● 3-position all ports closed

4F540E

● 3-position A/B/R connection

4F550E

● 3-position P/A/B connection

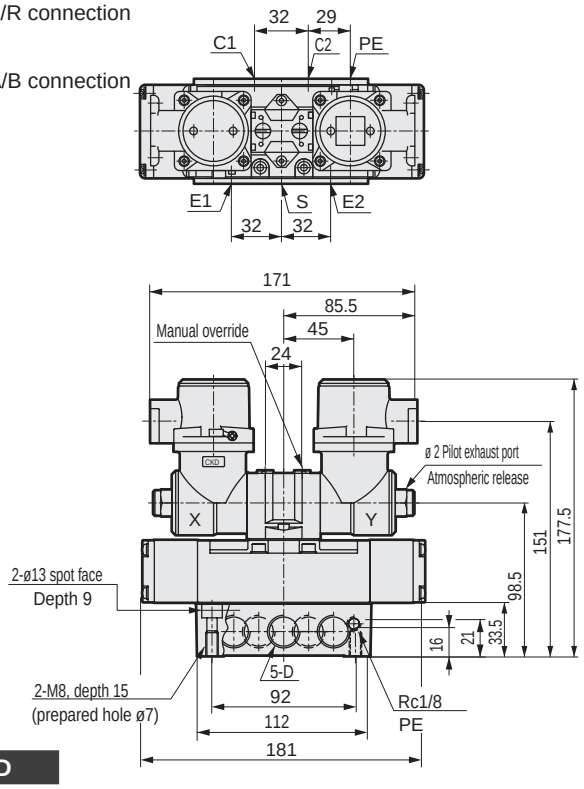

Model No.	D
*-10	Rc3/8
*-15	Rc1/2

● U type installation feet(P)
Material:HOT-ROLLED STEEL SHEET ZINC PLATED
TREATMENT

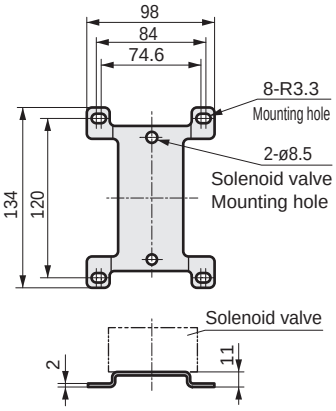

Dimensions CAD

4F610E

● 2-position single

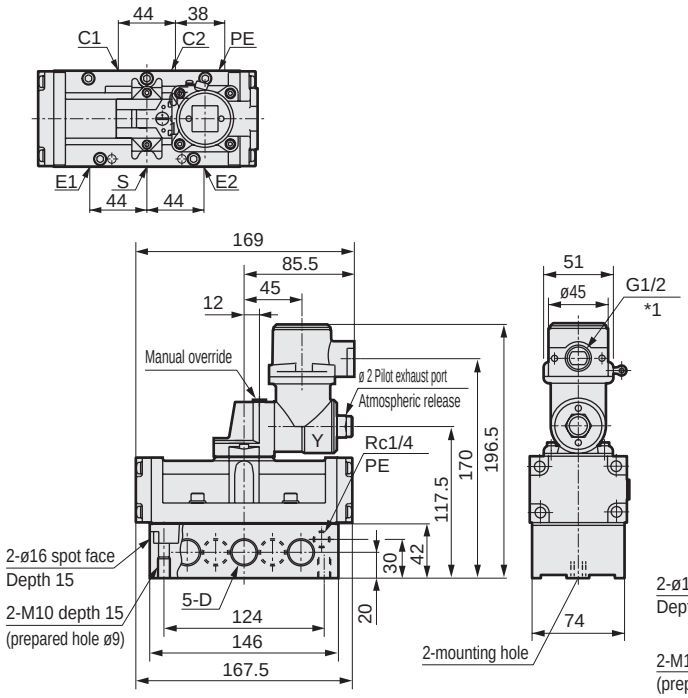

Model No.	D
*-15	Rc1/2
*-20	Rc3/4

*1 If model No. "-CN", it will be NPT1/2.

4F620E

● 2-position double

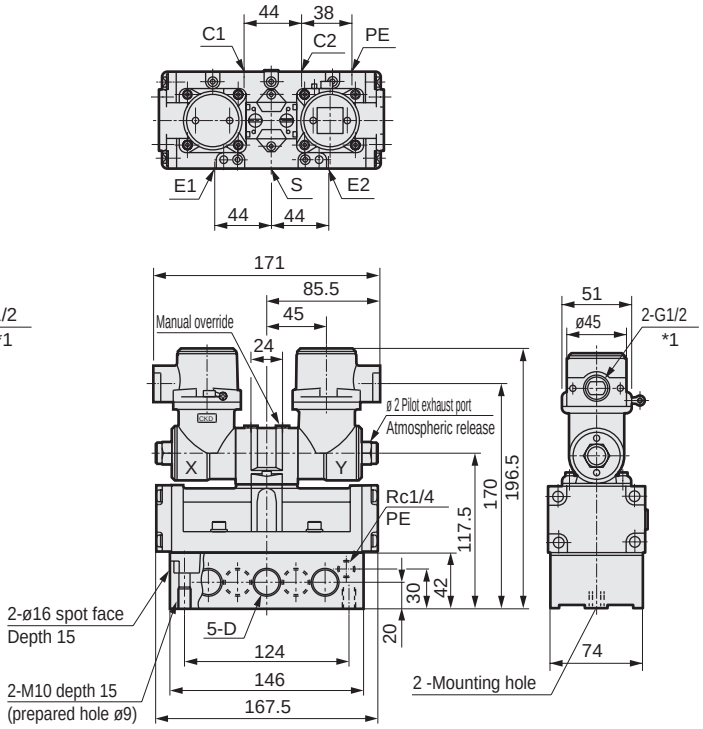

4F630E

● 3-position all ports closed

4F640E

● 3-position A/B/R connection

4F650E

● 3-position P/A/B connection

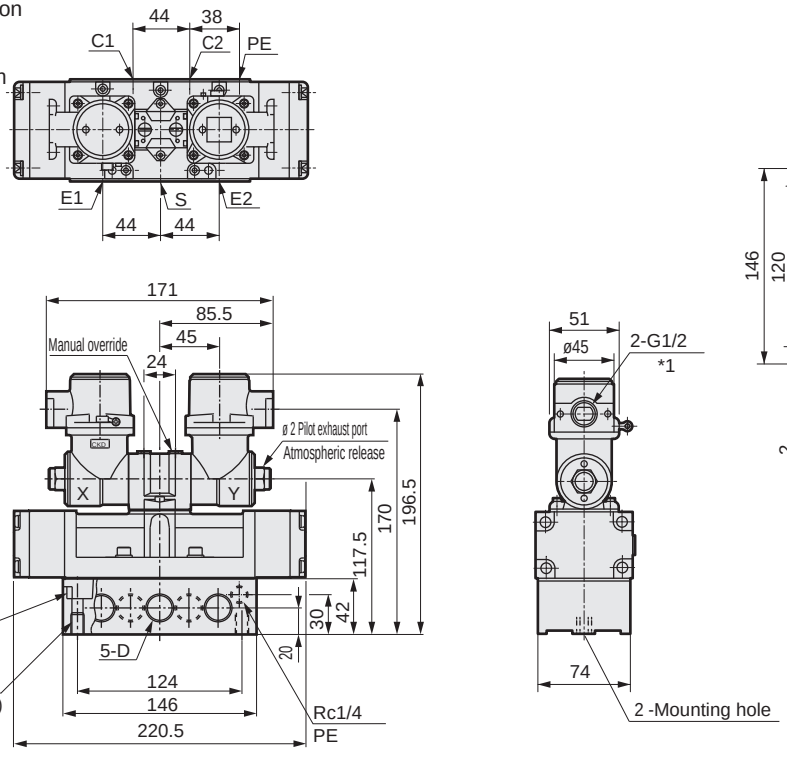

Model No.	D
*-15	Rc1/2
*-20	Rc3/4

● U type installation feet (P)
Material:Cold-rolled steel plates (SPCC) Zinc plated

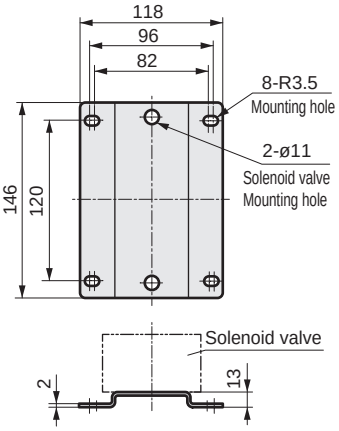

Dimensions CAD

4F710E

● 2-position single

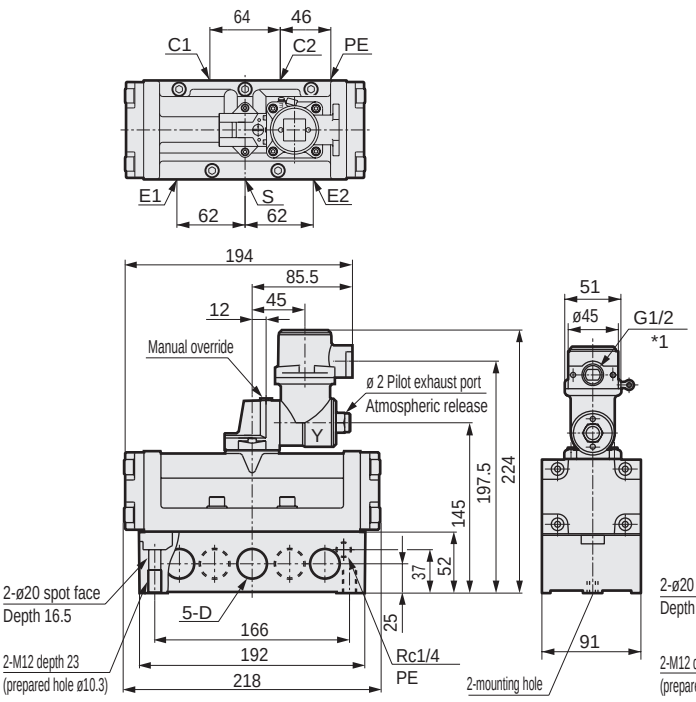

Model No.	D
*-20	Rc3/4
*-25	Rc 1

*1 If model No. "-CN", it will be NPT1/2.

4F720E

● 2-position double

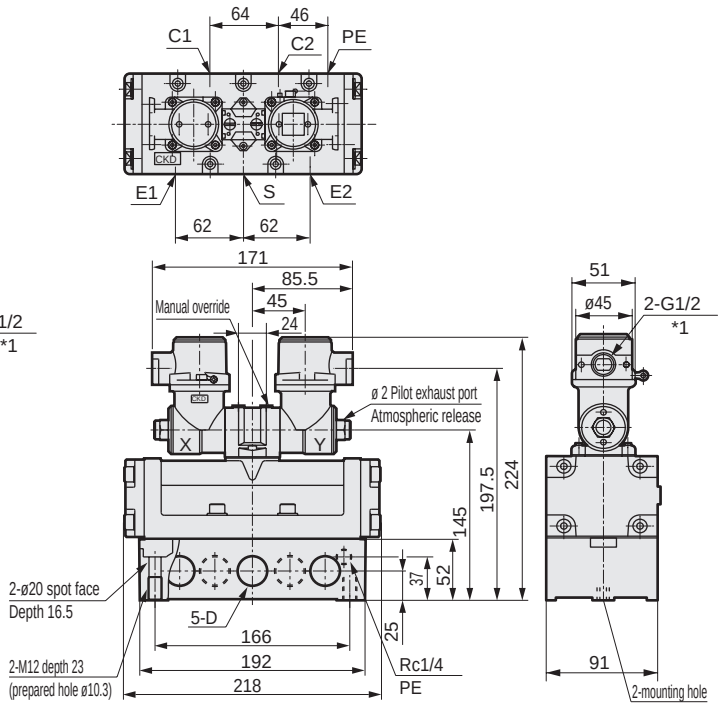

4F730E

● 3-position all ports closed

4F740E

● 3-position A/B/R connection

4F750E

● 3-position P/A/B connection

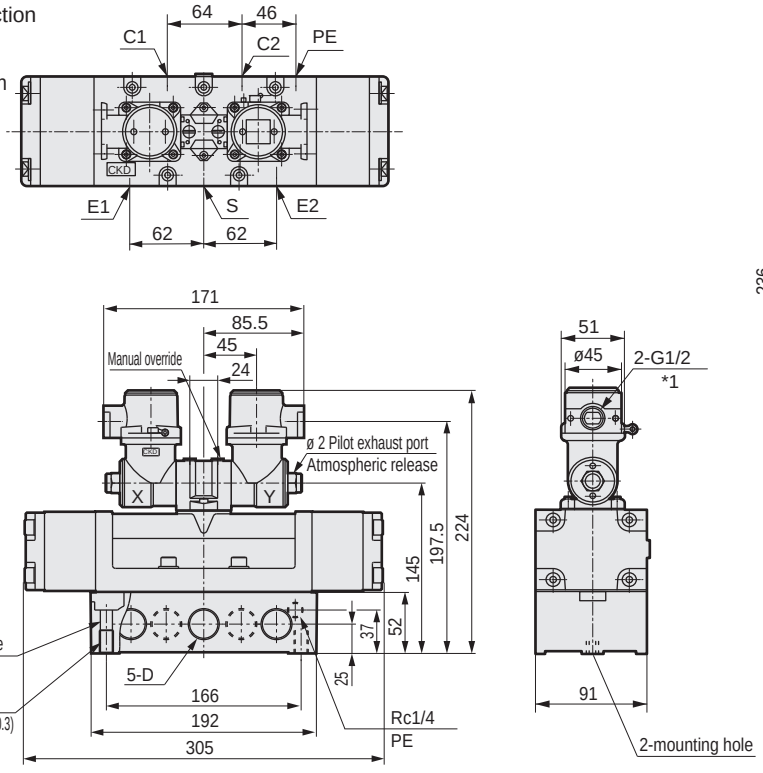

Model No.	D
*-20	Rc3/4
*-25	Rc 1

● U type installation feet (P)
Material:Cold-rolled steel plates (SPCC) Zinc plated

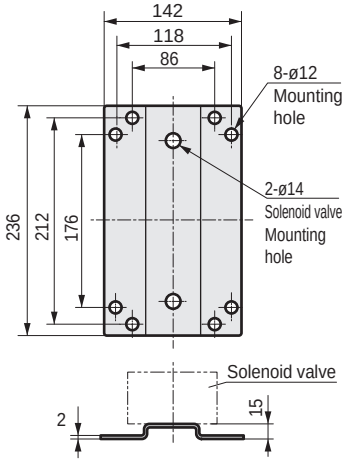

MEMO

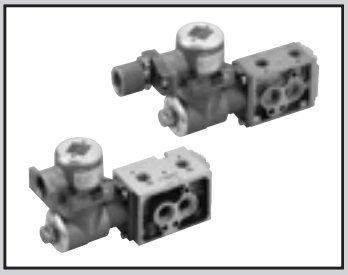

Discrete valve/body piping
Pilot operated explosion-proof 5-port valve pneumatic valve

4F1/3*0E Series

NAMUR standards option

- Japan Conformity Certificate No.
  Class A: No. T64364
  Class H: No. T64363
- China Conformity Certificate No. (CCC) 2020322307002070
- China explosion-proof type (NEPSI) GYB20.2251X

RoHS

Common specifications

Item	Description
Valve and operation	Pilot operated soft spool valve
Working fluid	Compressed air
Max. working pressure MPa	1.0
Min. working pressure MPa	0.1
Proof pressure MPa	1.5
Ambient temperature °C	-10 to 60 *1
Fluid temperature °C	5 to 60
Lubrication	Not required (use turbine oil ISO VG32 if necessary for lubrication)
Explosion-proof performance	d2G4
Vibration resistance m/s^2	50 or less
Shock resistance m/s^2	300 or less
Atmosphere	Cannot be used in corrosive gas environments

*1: The ambient temperature indicates the temperature for storage and upon installation, which will differ from the fluid temperature during operation.

Flow characteristics

Model No.	Solenoid position		Port size	Sonic conductance C[$dm^3/(s{\cdot}bar)$]
4F1	2-position	Single	Rc1/4 (S,E1,E2)	1.6
		Double		
4F3	2-position	Single		3.1
		Double		

*1: Effective cross-sectional area S and sonic conductance C are converted as S ≈ 5.0 x C.

Electrical specifications

Item			Description
Rated voltage V	AC		100V, 200V, 110V, 220V(50/60Hz)
	DC		24V, 12V
Rated voltage fluctuation range			±10%
Starting current A	AC	100V	0.186/0.135
		200V	0.093/0.068
		110V	0.169/0.123
		220V	0.085/0.061
	DC	24V	0.166
		12V	0.332
Holding current A	AC	100V	0.06/0.05
		200V	0.03/0.025
		110V	0.055/0.045
		220V	0.027/0.023
	DC	24V	0.166
		12V	0.332
Power consumption W	AC	100V	4.5/4.0
		200V	4.5/4.0
		110V	4.5/4.0
		220V	4.5/4.0
	DC	24V	4.0
		12V	4.0
Thermal class			A (*1, H)

*1: Thermal class H is available as an option. The dimensions are the same as those of A.

How to order

4F3 1 0E - NM - G P - R - X - AC100V -

- A Model No.
- B Solenoid position
- C Port size
- D External wire pull method
- E Option
- F Thermal class
- G Voltage
- H Organizations for explosive-proof certification

Code	Description	A Model No. 4F1	4F3
B Solenoid position			
1	2 position single	●	●
2	2-position double	●	●
C Port size			
NM	NAMUR standards (port size Rc1/4) *3	●	●
D External wire pull method			
G	Pressure proof packing protection pipe screw-in	●	●
T	Conduit thread system	●	●
E Option			
Blank	No option	●	●
R	Position change of manual override	●	●
F Thermal class			
Blank	A (standard product)	●	●
X	H (Option)	●	●
G Voltage			
AC100V	100 VAC (50/60 Hz)	●	●
AC200V	200 VAC (50/60 Hz)	●	●
DC24V	24 VDC	●	●
DC12V	12 VDC	●	●
AC110V	110 VAC (50/60 Hz)	●	●
AC220V	220 VAC (50/60 Hz)	●	●
*** Other made-to-order products**			
[AC voltage]			
12V, 24V, 48V, 115V, 120V, 125V		●	●
127V, 210V, 230V, 240V, 250V, 380V		●	●
[DC voltage]			
45V, 48V, 80V, 100V, 110V, 125V		●	●
H Organizations for explosive-proof certification			
Blank	Japan Certification (TIIS)	●	●
CN	China Compulsory Certificate (CCC)	●	●

⚠ Precautions for model No. selection

*1: 4F1-NM is a 4F1 standard product for the body repair parts, etc., and 4F3 for the pilot actuator assembly.
*2: 4F3-NM is not used because the repair parts of the body are dedicated parts.
*3: The only piping port is Rc1/4. The threads of the C1/C2 port on the NAMUR face have not been machined.
*4: 4F1 is used outdoors. Install it so that rainwater, etc., does not enter, as the PE exhaust and breathing hole are connected to the atmosphere.

Dimensions

● 4F110E-NM

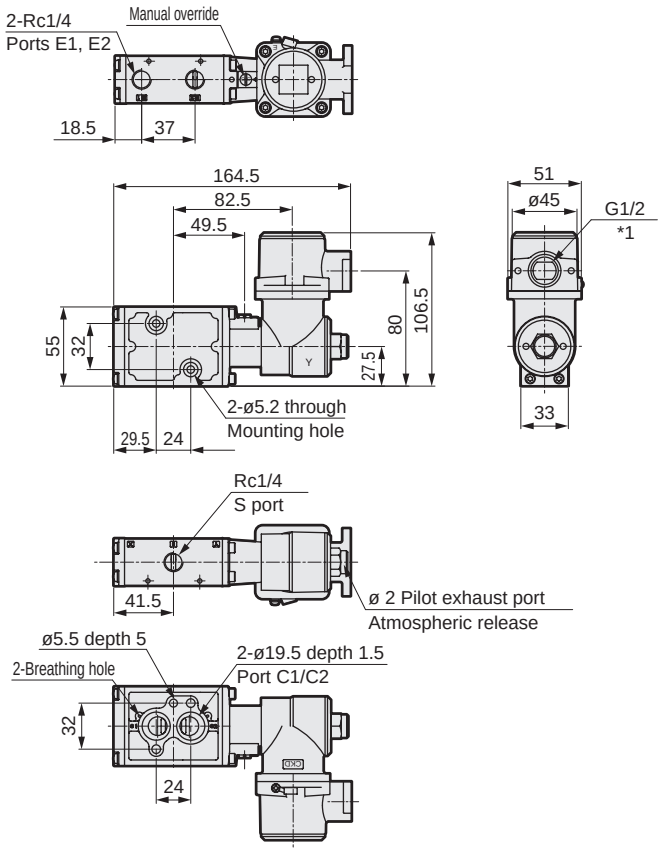

● 4F120E-NM

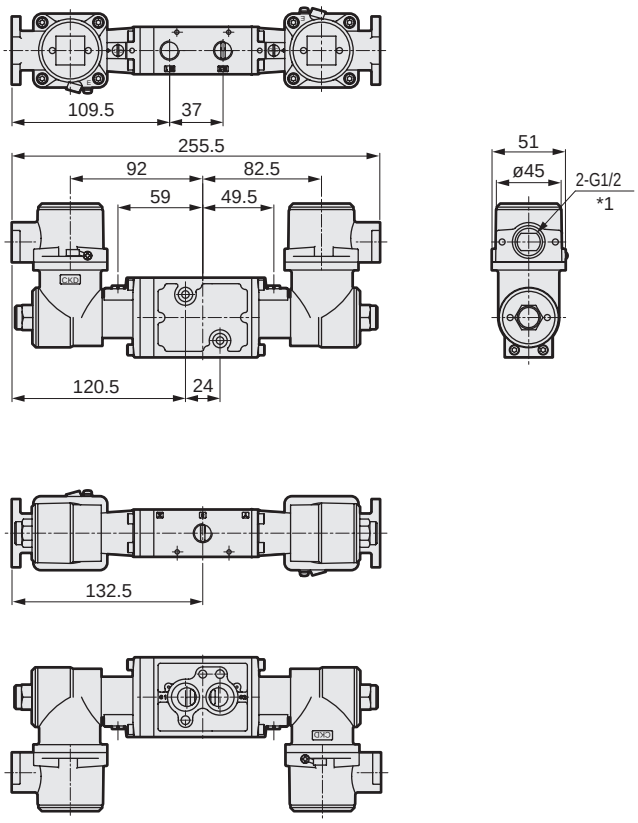

● 4F310E-NM

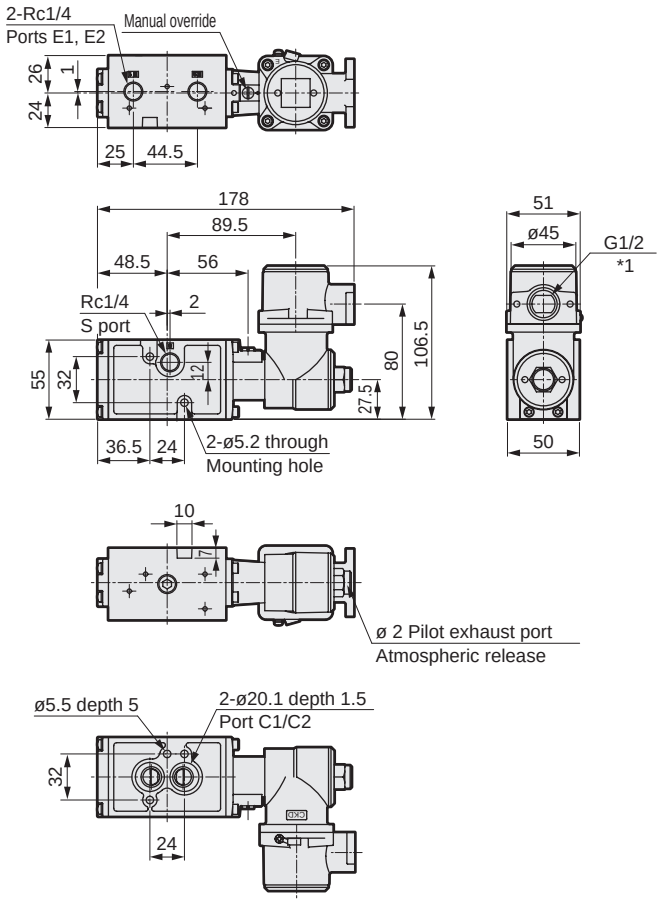

● 4F320E-NM

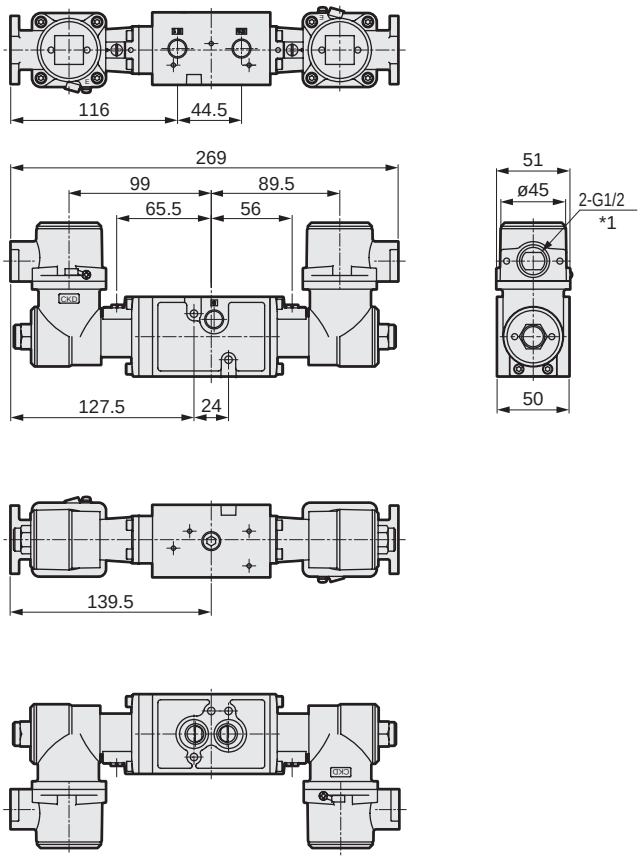

*1 If model No. "-CN", it will be NPT1/2.

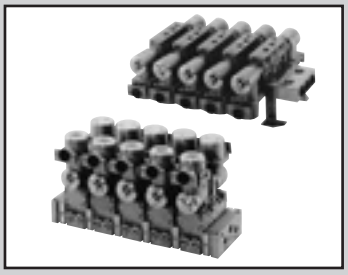

Individual wiring manifold
Pilot operated explosion-proof 5-port valve pneumatic valve

M4F**0E Series

- Japan Conformity Certificate No.
  Class A: No. T64364
  Class H: No. T64363
- China Conformity Certificate No. (CCC) 2020322307002070
- China explosion-proof type (NEPSI) GYB20.2251X
- Cylinder bore size: ø63 to ø250

RoHS CAD

JIS symbol

2-position/single

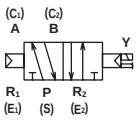

2-position/double

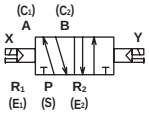

3-position/all ports closed

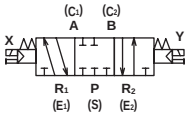

3-position/ABR connection

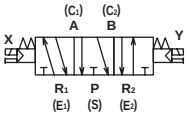

3-position/PAB connection

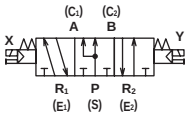

Common specifications

Item	Description
Manifold method	Manifold integrated
Manifold	Common exhaust
	Individual exhaust (M4F3)
Station No.	2 to 10 stations
Valve and operation	Pilot operated soft spool valve
Working fluid	Compressed air
Max. working pressure MPa	1.0
Min. working pressure MPa	Refer to Individual specifications listed below
Proof pressure MPa	1.5
Ambient temperature °C (*1)	-10 to 60(no freezing)
Fluid temperature °C	5 to 60
Lubrication	Not required (use turbine oil ISO VG32 if necessary for lubrication)
Explosion-proof performance	d2G4
Manual override	Locking
Vibration resistance m/s^2	50 or less
Shock resistance m/s^2	300 or less
Atmosphere	Cannot be used in corrosive gas environment.

*1: The ambient temperature indicates the temperature for storage and upon installation, which will differ from the fluid temperature during operation.

Electrical specifications

Item			Description
Rated voltage	AC		100V, 200V, 110V, 220V (50/60Hz)
	DC		24V, 12V
Voltage fluctuation range			±10%
Starting current A	AC	100V	0.186/0.135
		200V	0.093/0.068
		110V	0.169/0.123
		220V	0.085/0.061
	DC	24V	0.166
		12V	0.332
Holding current A	AC	100V	0.06/0.05
		200V	0.03/0.025
		110V	0.055/0.045
		220V	0.027/0.023
	DC	24V	0.166
		12V	0.332
Power consumption W	AC	100V	4.5/4.0
		200V	4.5/4.0
		110V	4.5/4.0
		220V	4.5/4.0
	DC	24V	4.0
		12V	4.0
Thermal class			A (*1, H)

*1: Thermal class H is available as an option. The dimensions are the same as those of A.

Individual specifications

Item				M4F3	M4F4	M4F5	M4F6	M4F7
Min. working pressure MPa	2-position		Single	0.1	0.1	0.1	0.15	0.15
			Double					
	3-position		All ports closed	0.15	0.15	0.15		
			A/B/R connection					
			P/A/B connection					
Port size (*1)	Common exhaust method		Cylinder port C	Rp1/4,Rp3/8	Rc1/4	Rc3/8	Rc1/2	Rc3/4
			Exhaust port E	Rc1/2	Rc3/8	Rc1/2	Rc3/4	Rc3/4
			Air supply port S	Rc1/2	Rc3/8	Rc1/2	Rc3/4	Rc1
	Individual exhaust method		Cylinder port C	Rp1/4,Rp3/8	Rc1/4	Rc3/8	Rc1/2	Rc3/4
			Exhaust port E	Rc1/4,Rc3/8	Rc1/4	Rc3/8	Rc1/2	Rc1/2
			Air supply port S	Rc1/2	Rc3/8	Rc1/2	Rc3/4	Rc1

*1: NPT threads can also be used for piping port. Contact CKD for details.
(However, the external wire inlet is G1/2.)

Performance/characteristics by model

Item		M4F3	M4F4	M4F5	M4F6	M4F7
Response time ms	(*1)	100	120	140	400	600

*1: The response times are values with working pressure of 0.5MPa, without lubrication, and with the power ON. They depend on the pressure and the lubricant quality.

Weight

Item			M4F3	M4F4	M4F5	M4F6	M4F7
Weight calculation formula kg (n: Station No.)	2-position	Single	1.26×n+0.98	1.42×n+0.47	1.74×n+0.77	3.41×n+1.79	4.72×n+1.79
		Double	1.80×n+0.98	1.86×n+0.47	2.22×n+0.77	3.91×n+1.79	5.20×n+1.79
	3-position		1.99×n+0.98	2.02×n+0.47	2.48×n+0.77	4.21×n+1.79	6.22×n+1.79

Flow characteristics

Model No.	Solenoid position		Port size	C[dm³/(s·bar)]	b	S(mm²)
4F3	2-position	Single	Rp1/4	3.9	0.42	-
		Double				
	3-position	All ports closed		4.0	0.35	
		A/B/R connection		4.5	0.42	
		P/A/B connection		4.0	0.35	
	2-position	Single	Rp3/8	5.8	0.42	
		Double				
	3-position	All ports closed		4.4	0.42	
		A/B/R connection		5.1	0.46	
		P/A/B connection		4.4	0.42	
4F4	2-position	Single	Rc1/4	5.0	0.21	-
		Double				
	3-position	All ports closed		4.7	0.24	
		A/B/R connection		5.3	0.29	
		P/A/B connection		5.3	0.29	
4F5	2-position	Single	Rc3/8	10.0	0.32	-
		Double				
	3-position	All ports closed		9.7	0.28	
		A/B/R connection		9.8	0.25	
		P/A/B connection				
4F6	2-position	Single	Rc1/2	18.0	0.31	-
		Double				
	3-position	All ports closed		15.0	0.23	
		A/B/R connection				
		P/A/B connection				
4F7	2-position	Single	Rc3/4	-	-	160
		Double				
	3-position	All ports closed				
		A/B/R connection				
		P/A/B connection				

*1: Effective cross-sectional area S and sonic conductance C are converted as S ≈ 5.0 x C.

How to order

* Purchase the M4F3-GASKET-KIT together.
* For 4F3 NPT thread, refer to *3.

● Single solenoid valve for manifold (4F3)

4F3 1 0E- 08 - T P- N - X —— AC100V -

● Single solenoid valve for manifold(4F4 to 7)

4F4 1 9E- 00 - T P —— X —— AC100V -

● Manifold

M 4F3 1 0E- 08 - T P- N - X - 2 - C L - AC100V - S1 S2 S3 S4 S5 MP

Ⓐ Model No.
Ⓑ Solenoid position
Ⓒ Port size
Ⓓ External wire pull method
Ⓔ Option
Ⓕ Thermal class
Ⓖ Station No.
Ⓗ Exhaust method
Ⓘ Installation feet
Ⓙ Voltage *2
Ⓚ Organizations for explosive-proof certification

List the number of solenoid valves to be used when using a mix manifold (Refer to page 1827 for an example of how to list the description.)

Precautions for model No. selection

*1: Only the following voltage products are available as made to order. (There are no certifications for other than the listed voltage.)

Voltage	AC[V](50/60 Hz)	12, 24, 48, 115, 120, 125, 127, 210, 230, 240, 250, 380
	DC[V]	12, 45, 48, 80, 100, 110, 125

*2: In order to ensure explosion-proof specifications, select a cable from the following for use with type G.

Cable	No. of cores	Nominal section area	Wire config	Finished outer ø
Polyethylene cable (EV)	2-conductor	2 mm²	7/0.6	ø10.5
600 V vinyl insulation vinyl Sheath cable (VV)	2-conductor	2 mm²	7/0.6	ø10.5
Control vinyl insulation vinyl Sheath cable (CVV)	2-conductor	2 mm²	7/0.6	ø10.5

*3: For 4F3 NPT thread solenoid valve Discrete for manifold, specify the bore size as N2. (Example) 4F310E-08N2-TP -AC100V

[Example of model No.]

M4F310E-08-TP-N-7-CL-100 VAC

- Ⓐ Model No. : Pilot operated explosion-proof 5-port valve manifold
- Ⓑ Solenoid position : 2-position single
- Ⓒ Port size : Rp1/4
- Ⓓ External wire pull method : Conduit screw connection method
- Ⓔ Option : Plug attached
- Ⓕ Thermal class : A
- Ⓖ Station No. : 7 stations
- Ⓗ Exhaust method : common exhaust
- Ⓘ Installation feet : L-bracket
- Ⓙ Voltage : 100 VAC

Code	Description	Ⓐ Model No. 4F3	4F4	4F5	4F6	4F7
Ⓑ Solenoid position						
1	2 position single	●	●	●	●	●
2	2-position double	●	●	●	●	●
3	3-position all ports closed	●	●	●	●	●
4	3-position ABR connection	●	●	●	●	●
5	3-position PAB connection	●	●	●	●	●
8	Mix manifold (when there are multiple solenoid positions)	●	●	●	●	●
Ⓒ Port size						
08	Rp1/4(For M4F3), Rc1/4	●	●			
10	Rp3/8(For M4F3),Rc3/8	●		●		
D15	Rc1/2				●	
E20	Rc3/4					●
08N	NPT1/4	●	●			
10N	NPT3/8	●		●		
08N2	NPT1/4 (with solenoid valve Discrete for manifold)	●				
10N2	NPT3/8 (with solenoid valve Discrete for manifold)	●				
D15N	NPT1/2				●	
E20N	NPT3/4					●
08G	G1/4	●	●			
10G	G3/8	●		●		
D15G	G1/2				●	
E20G	G3/4					●
Ⓓ External wire pull method						
G	Pressure proof packing protection pipe screw-in (*2)	●	●	●	●	●
T	Conduit thread system	●	●	●	●	●
Ⓔ Option						
Blank	No option	●	●	●	●	●
N	Plug included (for 3-port valve)	●	●	●	●	●
R	Position change of manual override	●				
NC	3-port valve specifications plug assembly (C1 (A), E1 (R1) assembly)	●	●	●	●	●
NO	3-port valve specifications plug assembly (C2 (B), E2 (R2) assembly)	●	●	●	●	●
Ⓕ Thermal class						
Blank	A(Standard products)	●	●	●	●	●
X	H(Option)	●	●	●	●	●
Ⓖ Station No.						
2 to 10	2 to 10 stations	●	●	●	●	●
Ⓗ Exhaust method						
C	Common exhaust	●	●	●	●	●
I	Individual exhaust	●				
Ⓘ Installation feet						
L	L-bracket(Dedicated for single)	●				
U	U type bracket	●				
Ⓙ Voltage						
AC100V	100 VAC (50/60 Hz)	●	●	●	●	●
AC200V	200 VAC (50/60 Hz)	●	●	●	●	●
DC24V	24 VDC	●	●	●	●	●
DC12V	12 VDC	●	●	●	●	●
AC110V	110 VAC(50/60 Hz)	●	●	●	●	●
AC220V	220 VAC(50/60 Hz)	●	●	●	●	●
*** Other made-to-order products**						
[AC voltage]						
12V, 24V, 48V, 115V, 120V, 125V, 127V, 210V, 230V, 240V, 250V, 380V		●	●	●	●	●
[DC voltage]						
45V, 48V, 80V, 100V, 110V, 125V		●	●	●	●	●
Ⓚ Organizations for explosive-proof certification						
Blank	Japan certification (TIIS)	●	●	●	●	●
CN	China certification (CCC)	●	●	●	●	●

How to order masking plate kit

M4F3 - **08** - **MP-KIT**

* Gasket attached (M4F3)
Gasket/set screw attached (M4F4 to M4F7)

Ⓐ Model No.

Ⓐ Model No.
M4F3
M4F4
M4F5
M4F6
M4F7

Ⓑ Port size

Ⓑ Port size		
Code	Description	Model No.
08	Rp1/4	M4F3
10	Rp3/8	
Blank	Rc1/4	M4F4
Blank	Rc3/8	M4F5
D15	Rc1/2	M4F6
E20	Rc3/4	M4F7

How to order mix manifold

M **4F3** **8** **0E** - **08** - **T** **P** - **N** - **X** - **7** - **C** **U** - **AC100V** -

S1	S2	S3	S4	S5	MP
2	2	1	1	1	0

Mix manifold "8"

*For How to order other items, refer to the previous page.

S1=1, 6 S2=2, 5
S3=3 S4=7
S5=4

*Create a manifold specifications sheet.

How to fill in form for ordering a mix manifold

(1) List the quantity for each function (solenoid position) at the end of How to order. The functions and codes are as shown below.

Example: 2-position single → S1

Code	Function (solenoid position)
S1	2-position single
S2	2-position double
S3	3-position all ports closed
S4	3-position A/B/R connection
S5	3-position P/A/B connection
MP	Masking plate

\- S1 S2 S3 S4 S5 MP: 2 2 1 1 1 0

List the quantity

(2) List the function (solenoid position) and layout position in the field for remarks.

Solenoid position code = ◯, ◯th station (where the left side is the 1st station when the piping port is facing forward.)

Example: S1 = 1, 6 (1st, 6th stations are 2-position single)

[Example of model No.]
For 7 stations

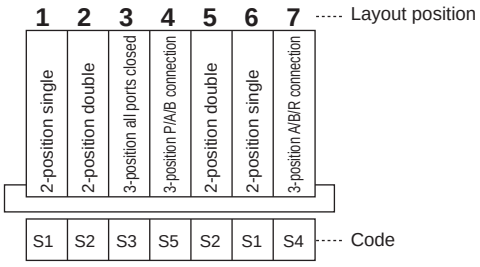

2-position single (S1) : 2 units (1st station, 6th station)
2-position double (S2) : 2 units (2nd station, 5th station)
3-position all ports closed (S3) : 1 unit (3rd station)
3-position ABR connection (S4) : 1 unit (7th station)
3-position PAB connection (S5) : 1 unit (4th station)

M4F380E-08-TP-N-7-CU-AC100V - S1 S2 S3 S4 S5 MP: 2 2 1 1 1 0

S1=1, 6 S2=2, 5 S3=3
S4=7 S5=4
*Create a manifold specifications sheet.

Dimensions

M4F310E- $\frac{08}{10}$ **-TP-** **CL(Common exhaust)** **I L(Individual exhaust)**

● With L bracket

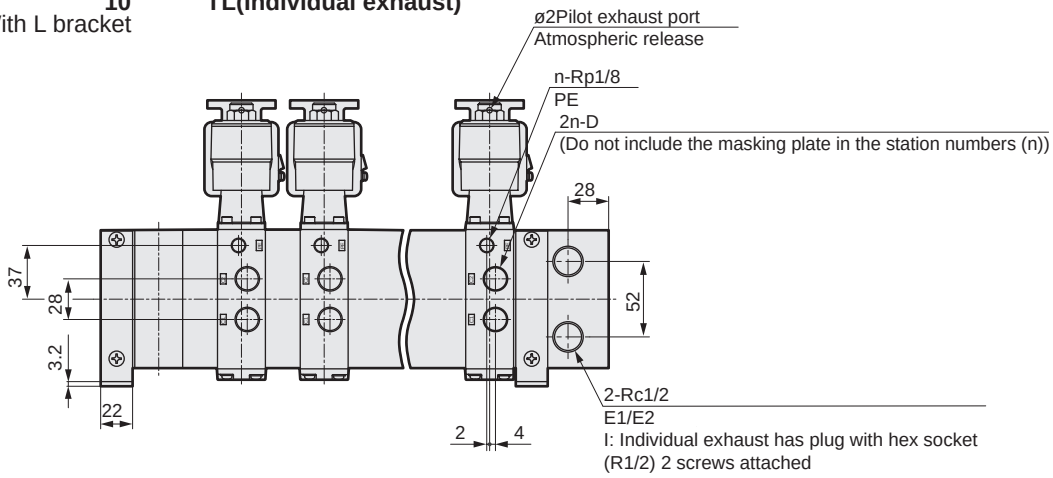

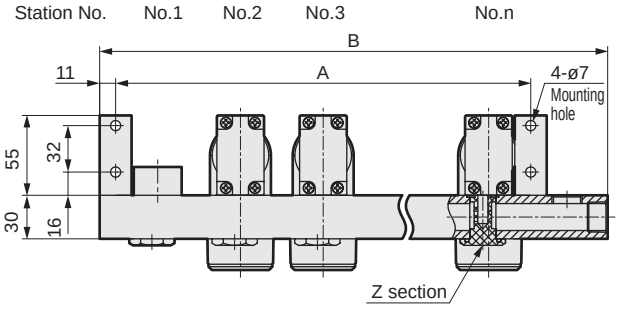

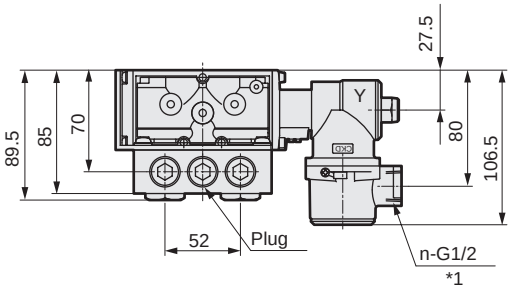

*1 If model No. "-CN", it will be NPT1/2.

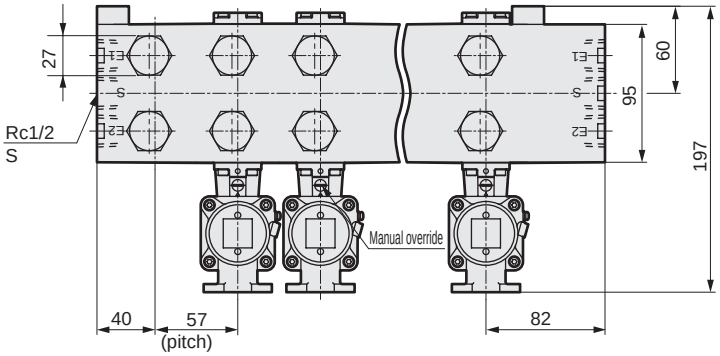

I: Z section with individual exhaust

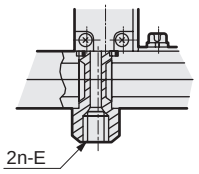

Station No.	2	3	4	5	6	7	8	9	10
A	115	172	229	286	343	400	457	514	571
B	179	236	293	350	407	464	521	578	635

Model No.	D	E	Single model No. for manifold
4F310E-08	Rp1/4	Rc1/4	4F310E 4F320E 4F330E 4F340E 4F350E
4F320E-08			
4F330E-08			
4F340E-08			
4F350E-08			
4F310E-10	Rp3/8	Rc3/8	
4F320E-10			
4F330E-10			
4F340E-10			
4F350E-10			

Dimensions

M4F3*0E- 08/10 -TP- CU(Common exhaust) / I U(Individual exhaust)

● With U bracket

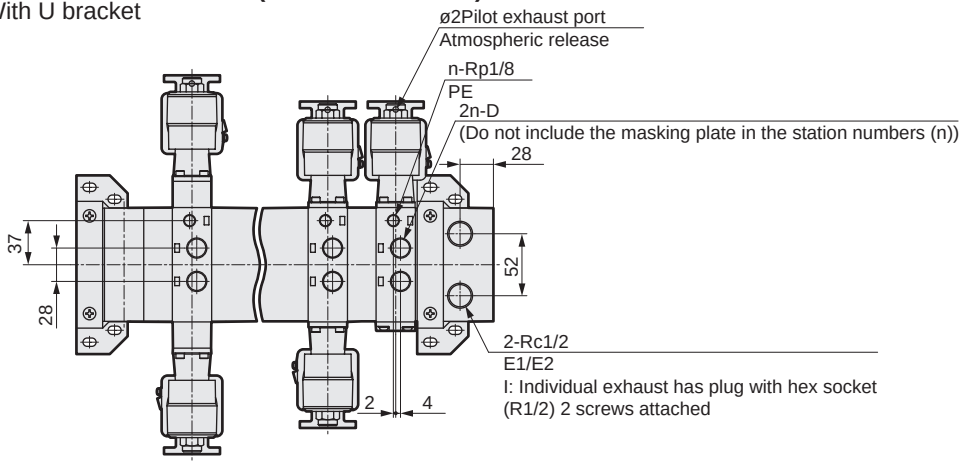

Station No. No.1 No.2 ···· No.n

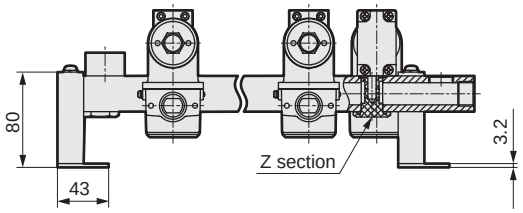

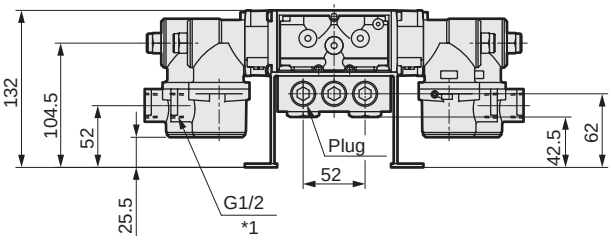

*1 If model No. "-CN", it will be NPT1/2.

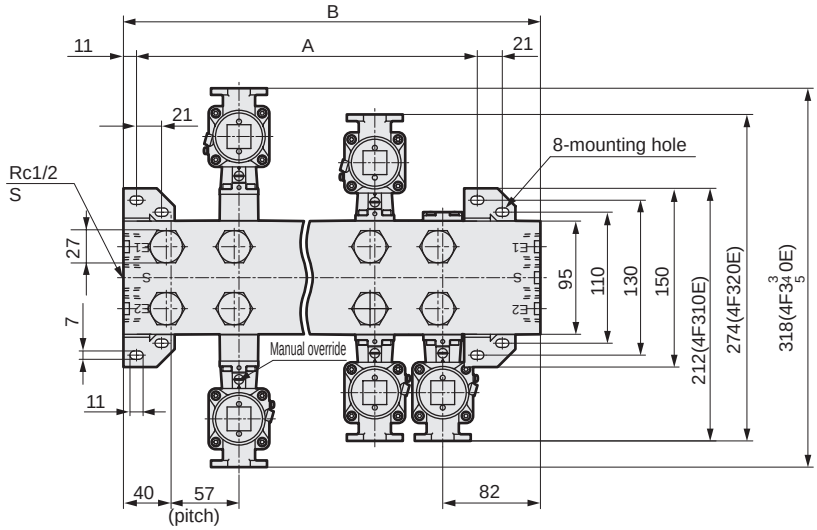

I: Z section with individual exhaust

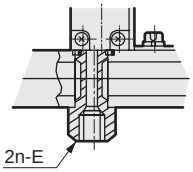

Model No.	D	E	Single model No. for manifold
4F310E-08	Rp1/4	Rc1/4	4F310E 4F320E 4F330E 4F340E 4F350E
4F320E-08			
4F330E-08			
4F340E-08			
4F350E-08			
4F310E-10	Rp3/8	Rc3/8	
4F320E-10			
4F330E-10			
4F340E-10			
4F350E-10			

Station No.	2	3	4	5	6	7	8	9	10
A	115	172	229	286	343	400	457	514	571
B	179	236	293	350	407	464	521	578	635

Dimensions CAD

M4F4*0E-08-TP-*-C

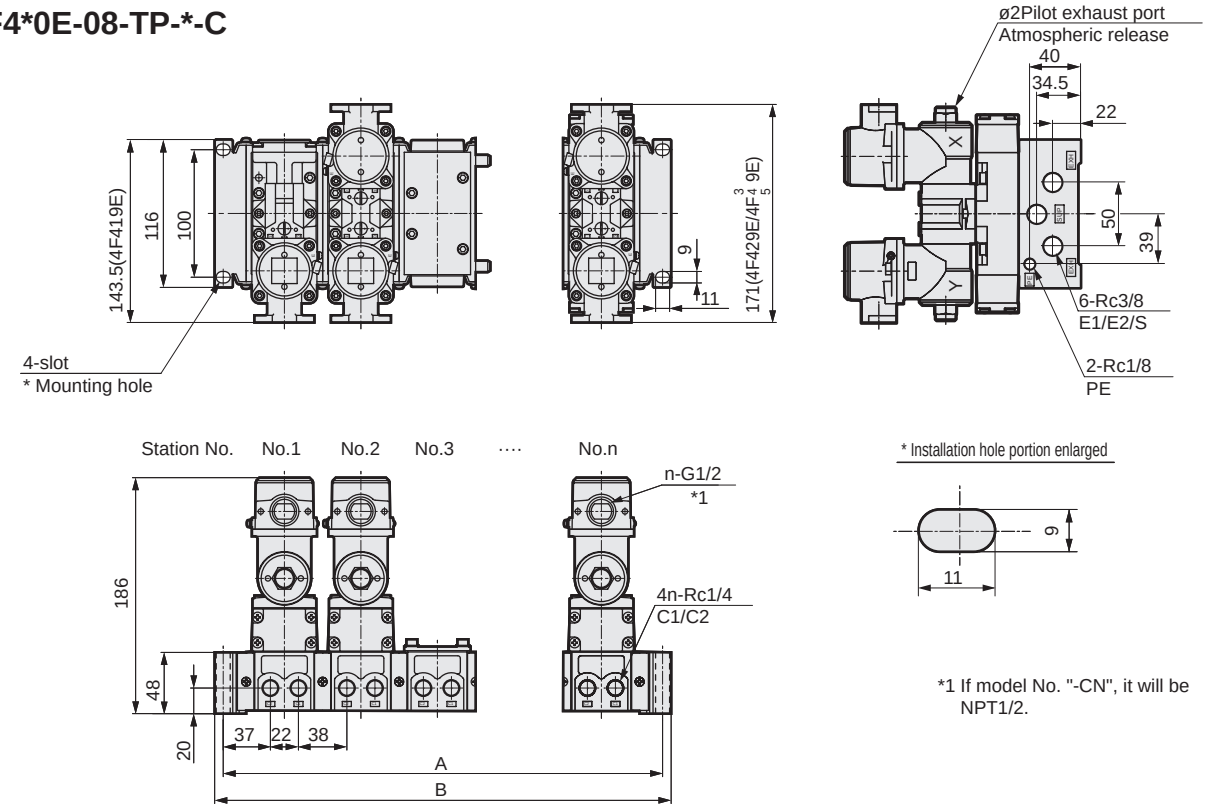

*1 If model No. "-CN", it will be NPT1/2.

Station No.	2	3	4	5	6	7	8	9	10
A	156	216	276	336	396	456	516	576	636
B	169.4	229.4	289.4	349.4	409.4	469.4	529.4	589.4	649.4

Single model No. for manifold	
Solenoid valve	**4F419E, 4F429E, 4F439E** **4F449E, 4F459E**

M4F5*0E-10-TP-*-C

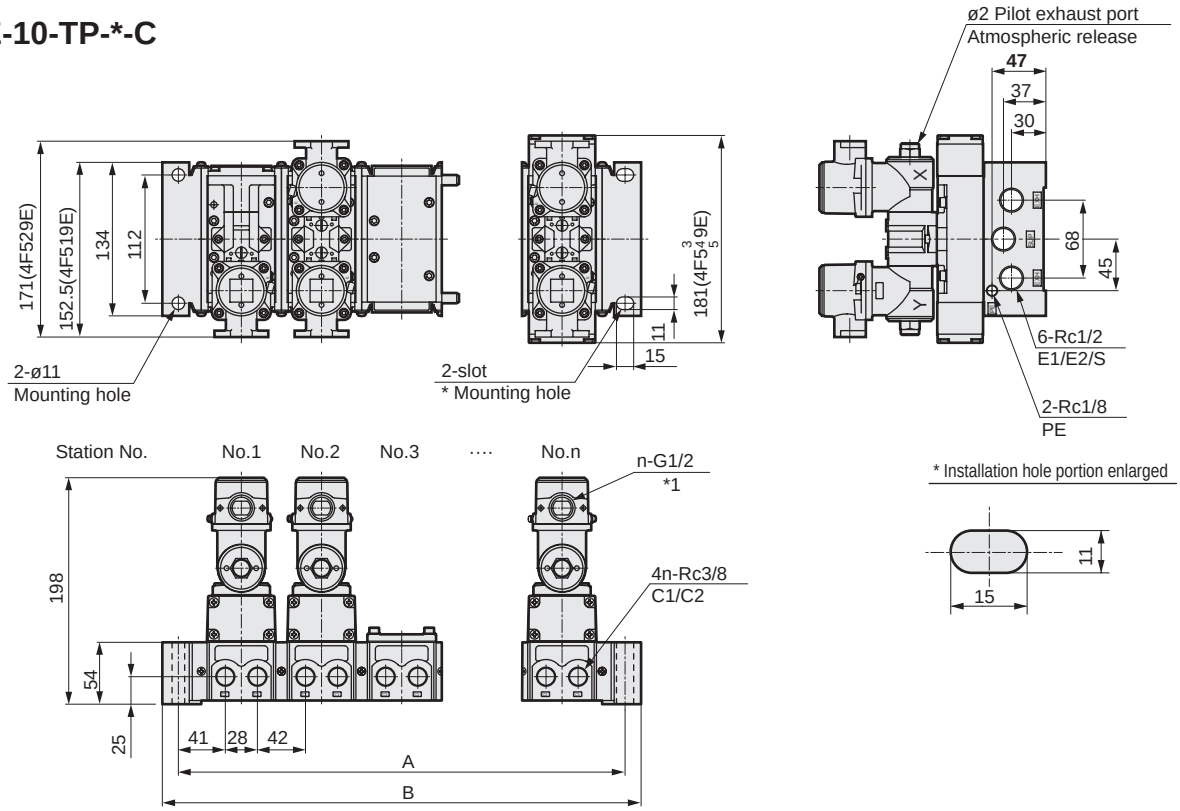

Station No.	2	3	4	5	6	7	8	9	10
A	180	250	320	390	460	530	600	670	740
B	208	278	348	418	488	558	628	698	768

Single model No. for manifold	
Solenoid valve	**4F519E, 4F529E, 4F539E** **4F549E, 4F559E**

Dimensions CAD

M4F6*0E-D15-TP-*-C

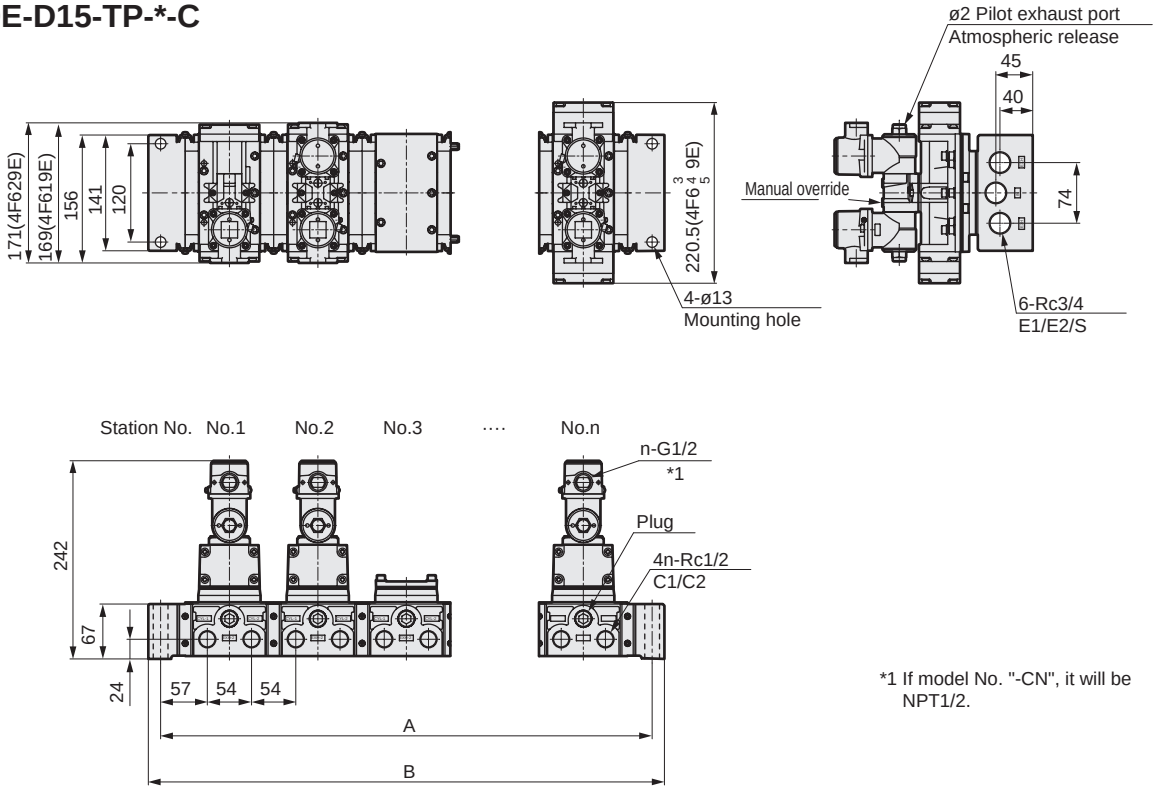

*1 If model No. "-CN", it will be NPT1/2.

Station No.	2	3	4	5	6	7	8	9	10
A	276	384	492	600	708	816	924	1032	1140
B	306	414	522	630	738	846	954	1062	1170

Single model No. for manifold	
Solenoid valve	**4F619E, 4F629E, 4F639E 4F649E, 4F659E**

M4F7*0E-E20-TP-*-C

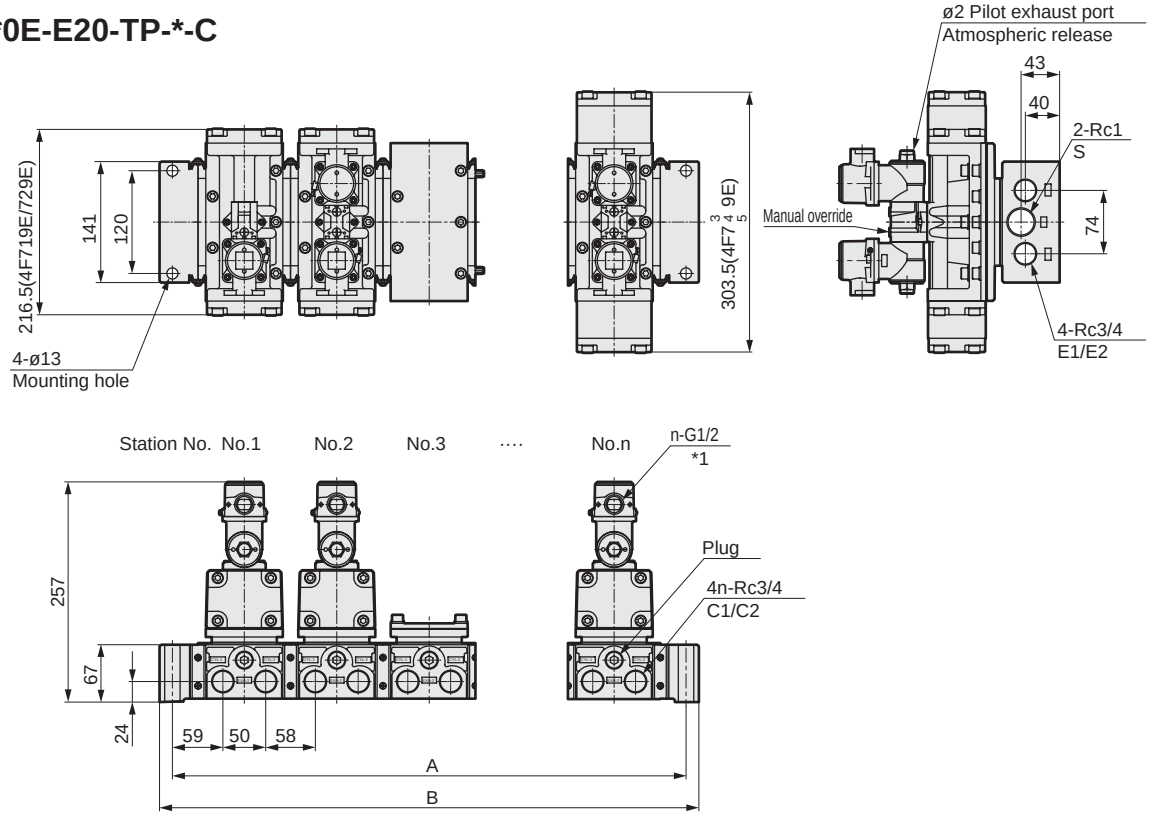

Station No.	2	3	4	5	6	7	8	9	10
A	276	384	492	600	708	816	924	1032	1140
B	306	414	522	630	738	846	954	1062	1170

Single model No. for manifold	
Solenoid valve	**4F719E, 4F729E, 4F739E 4F749E, 4F759E**

4GA/B
M4GA/B
MN4GA/B
4GA/B (master)
4GB With sensor
4GD/E
M4GD/E
MN4GD/E
4GA4/B4
MN3E MN4E
W4GA/B2
W4GB4
MN3S0 MN4S0
4SA/B0
4KA/B
4KA/B (master)
4F
4F (master)
PV5G GMF
PV5 GMF
PV5S-0
3Q
MV3QR
3MA/B0
3PA/B
P/M/B
NP/NAP NVP
4G*0EJ
4F*0EX
4F*0E
HMV HSV
2QV 3QV
SKH
Silencer
TotAirSys (Total Air)
TotAirSys (Gamma)
Ending

M4F**E Manifold specifications sheet

Date issued / /

Company

Contact

Order No.

● Contact ● Quantity set(s) ● Delivery date /

Slip No.	Order No.

If instructions are provided for combinations of solenoid valves, changes of piping ports, etc., with this manifold specifications sheet, units will be delivered with the corresponding items assembled. When using this specifications sheet to place an order, contact CKD about the manifold model, etc.

● Manifold model No.

M4F □ □ 0E - □ - □ P - □ □ - □ - □ □ - □

- 3 to 7
- B: Solenoid position
- C: Port size (C1/C2)
- D: External wire pull method
- E: Option
- F: Thermal class
- G: Station No.
- H: Exhaust method
- I: Installation feet (For 4F3)
- J: Voltage

Solenoid valve			Installation position										Subtotal	Total
	Model	Bore size	1	2	3	4	5	6	7	8	9	10		
2-position Single	4F □													
2-position Double	4F □													
3-position all Ports block	4F □													
3-position A/B/R Connection	4F □													
3-position P/A/B Connection	4F □													
Masking plate														

MEMO

Pneumatic components

Safety Precautions

Be sure to read this section before use.
Refer to Intro Page 59 for general precautions for using valves.

Product-specific cautions: Pilot operated explosion-proof 5-port valve pneumatic valve 4F**0E series

Design/selection

⚠ WARNING

■ Usable in Class 1 and 2 danger zones where there is combustible gas or steam. Cannot be used in Class 0 zones.

■ Select models and perform installation in accordance with JIS.C.0902 (general explosion-proof rules for electrical equipment), “RIIS Explosion-Proof Guidelines for Electrical Equipment in Factories”.

⚠ CAUTION

■ Explosive gas and explosion-proof enclosure

The degree of explosive gas danger is classified according to the ignitability and flame-proof grade. Gases with equivalent risk are grouped into one group, and explosion-proof structure standards are set for each group. Codes to indicate the type, flame-proof grade and ignitability must be indicated in this order on the electrical components of explosion-proof structures. These codes indicate which flame-proof grade and ignitability class the electrical components have been manufactured for, and which gases can be used. For the example of explosion-proof solenoid valve of d2G4

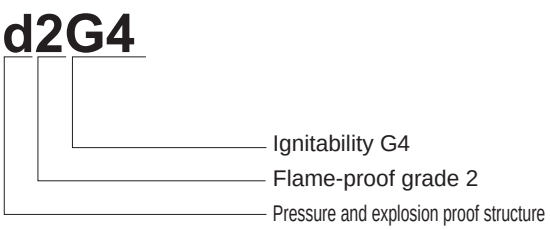

Table 1 indicates the classification of gases with a danger category of G4 ignitability to Grade 2 explosibility that are compatible with the product. Less dangerous gases are also listed that are guaranteed to be flame-proof.

Table 1

Ignitability / Flame-proof grade	G1	G2	G3	G4	G5
1	Acetone	Ethanol	Gasoline	Acetaldehyde	
	Ammonia	Isoamyl acetate	Hexane	Ethyl ether	
	Carbon monoxide	1-butanol			
	Ethane	Butane			
	Acetic acid	Acetic anhydride			
	Ethyl acetate				
	Toluene				
	Propane				
	Benzene				
	Methanol				
	Methane				
2	Coal gas	Ethylene	Isoprene		
		Ethylene oxide			
3	Water gas, hydrogen	Acetylene			Carbon disulfide

Use in the above ranges.

■ Dangerous zone

Situations where explosive gases and air mix at a high enough level to cause an explosion or fire are called danger zones. These zones are classified into Class 0 zones, Class 1 zones and Class 2 zones according to the time and frequency at which the dangerous atmosphere is reached. The explosion-proof structure that can be used is determined according to these classes.

● Class 0 zone

Zones where a dangerous atmosphere is or could be continuously generated, and where the concentration of explosive gas is maintained continuously or for a long time above the lower limit for explosions.

Example a: The open space above a flammable fluid inside a container or tank
b: Inside a combustible gas container or tank c: Near flammable fluid in an open container

● Class 1 zone

(1) Zones where explosive gas could accumulate to a dangerous concentration during operations such as the opening/closing of the lid for removing the product or operation of the safety valve, etc.
(2) Zones where explosive gases are likely to accumulate to dangerous concentrations during repair or maintenance or due to leakage, etc.

● Class 2 zone

(1) Zones where combustible gases or flammable fluids are regularly handled, but where the gases and fluids are sealed in a vessel or equipment, and where the gases and fluids could leak to dangerous concentrations only if the vessel or equipment breaks by accident or due to misoperation.
(2) Zones where measures to prevent the accumulation of explosive gases are taken with a reliable mechanical ventilation device, but where explosive gases could accumulate to a dangerous concentration if the ventilation device fails.
(3) Zones near or adjacent to a Class 1 zone where explosive gases could infiltrate at a dangerous concentration.

■ Explosion-proof test model No.

Explosion-proof certification has been obtained with the pilot actuator assembly.
The test model and product model No. of the pilot actuator assembly are as listed in the table below.

(Example)

Product model No.	Test model
4F3 □ 0E-G P	E3-G P
4F410E to 4F710E-G P	E4-G P
4F 420/430/440/450 E to 4F 720/730/740/750 E-G P	E5-G P
4F3 □ 0E-G P-X	H3-G P
4F410E to 4F710E-G P-X	H4-G P
4F 420/430/440/450 E to 4F 720/730/740/750 E-G P-X	H5-G P

Mounting, installation and adjustment

1. Piping

⚠ CAUTION

■ A pilot exhaust hole is provided on the pilot actuator. Contact CKD when using this product where problems could occur from exhaust, such as in a clean room.

2. Wiring

⚠ CAUTION

■ Check for leakage current to avoid malfunction caused by leakage current from other fluid control components.

● When absorbing a surge voltage with the CR circuit and using a PLC that protects the switching element, be careful as a leakage current will flow through the CR element and negatively affect product operation.

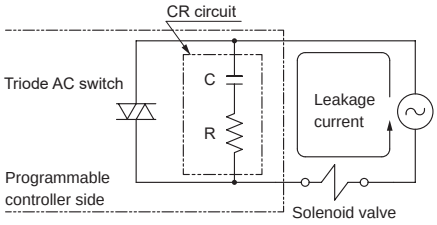

Be sure to keep the size of the residual leakage current
4.0 mA or less with 12 to 127 VAC,
2.0 mA or less with 200 to 380 VAC,
1.5 mA or less with 12 to 48 VDC, and
0.6 mA or less with 80 to 125 VDC.

■ When using the unit outdoors, use type T and take care that rain water does not enter from lead wire outlet G1/2. As type G has been specifically designed for indoor applications, do not use this outdoors.

■ Wiring

● Install wiring in accordance with JIS explosion-proof guidelines.

● Remove the terminal box cap with the attached tools for disassembly and install the wiring. Use the tools specified in the following diagram for crimping the crimp terminals upon wiring. After finishing wiring, securely tighten the terminal box cap.
Keep the disassembly tools for future maintenance.

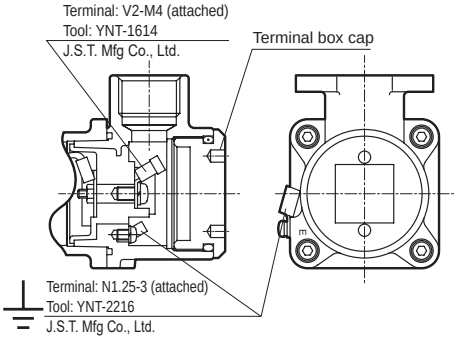

■ In order to ensure explosion-proof specifications, select a cable from the following for use with type G.

Cable	No. of cores	Nominal section area	Wire config	Finished outer ø
Polyethylene cable (EV)	2-conductor	2 mm^2	7/0.6	ø10.5
600 V vinyl insulation vinyl sheath cable (VV)	2-conductor	2 mm^2	7/0.6	ø10.5
Control vinyl insulation vinyl sheath cable (CVV)	2-conductor	2 mm^2	7/0.6	ø10.5

Use/maintenance

⚠ WARNING

■ With the pilot actuator assembly, do not disassemble anything other than the terminal box cap (as performance of the explosion-proof enclosure cannot be guaranteed if the unit has been disassembled.)
As explosion-proof certification has been obtained with the pilot actuator assembly, perform replacement of the coil with the pilot actuator assembly.

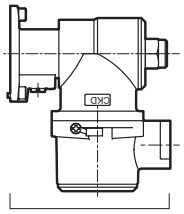

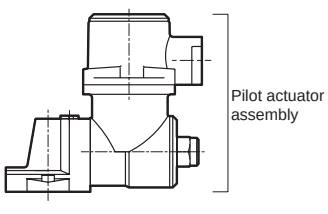

■ Manual override
As the manual override is equipped with a lock, turn this OFF when it will not be in use. For use, turn with a flathead ⊖ screwdriver.

● **4F3**
C: Align letters with OFF arrow
O: Turn in direction of ON arrow until it stops
(arrow and O may not align with each other)

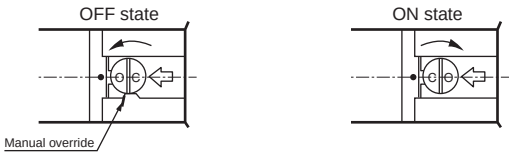

● **4F4/5/6/7**
0..... Align OFF ● with the number
1..... Turn in direction of ON 1 until it stops
(1 and ● may not align with each other)

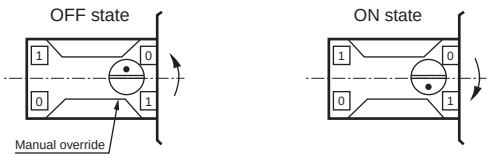

Dimensions

External wire pull method

G type
Pressure proof packing
Protective tube threading

Pressure proof packing

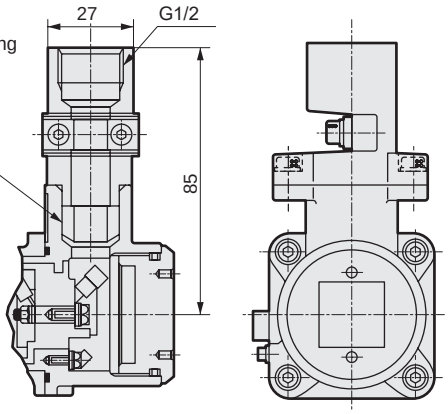

T type
Conduit thread system

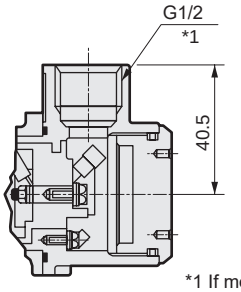

*1 If model No. "-CN", it will be NPT1/2.

[Safety precautions]

G type
Pressure proof packing
Protective tube threading

A type specifically designed for indoor use

Pressure proof packing

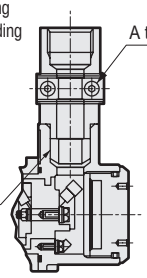

While the structure prevents water from entering inside the valve, it also allows water to enter the cable between the valve and the terminal box. For this reason, as long periods of use will cause the pressure proof packing to deteriorate and increase the possibility of water entering the valve, the model has been specified for indoor use.

T type
Conduit thread system

When using the unit outdoors, use thick steel conduits and take care by installing sealants, etc., to prevent water from entering via the thread part.

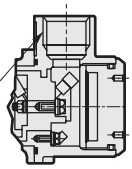

Take care that water will not enter when being left without electrical piping after installation of outdoor piping as well. (Water may infiltrate the wiring section)

HMV/HSV

Manual selector valve

4-port valve

Overview

The HMV/HSV series manual selector valves are 4-port valves with a sliding valve method for the main valve. Suitable for operating cylinders of ø20 to ø160.

Features

Simple ease of operation with lower sliding

Operation with a sliding lever (detent embedded rotary) method

2 types are available according to applications

HMV: Miniature (Rc1/4)
HSV : Standard (Rc1/4, 3/8, 1/2, 3/4)



CONTENTS

Series variation	1838
Manual selector valve HMV/HSV	
● Miniature (HMV)	1840
● Standard (HSV)	1840
⚠ Safety precautions	1843

Series			Number of ports	Position JIS symbol	Valve performance: Flow characteristics C [dm³/(s·bar)] *1	Valve performance: Applicable cylinder bore size	Switching position: 3-position all ports closed	Switching position: 3-position A/B/R connection	Port size: Female thread Rc1/4	Port size: Female thread Rc3/8	Port size: Female thread Rc1/2	Port size: Female thread Rc3/4	Page
Single unit	**HMV** Series 	Miniature	4 ports	● HMVC2, HSVC2 (All ports closed) Switching position 1 N 2 	1.5 to 1.6	ø20 to ø40	●	●	●				1840
	HSV Series 	Standard		● HMVO2, HSVO2 (ABR connection) Switching position 1 N 2 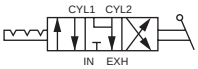	7.2 to 10.3	up to ø160	●	●	●	●	●	●	1840

*1 : Effective cross-sectional area S and sonic conductance C are converted as S ≈ 5.0 x C.

MEMO

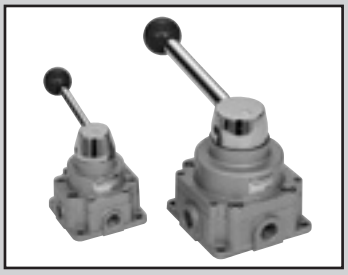

Manual selector valve

HMV/HSV Series

RoHS CAD

JIS symbol

● HMVC2, HSVC2
(All ports closed)

Switching position 1 N 2

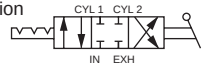

● HMVO2, HSVO2
(ABR connection)

Switching position 1 N 2

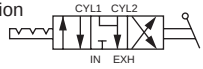

Common specifications

Item		HMV$^{C}_{O}$2	HSV$^{C}_{O}$2			
Valve and operation		Rotary sliding valve				
Working fluid		Compressed air				
Max. working pressure	MPa	0.97 (≈140 psi, 9.7 bar)				
Min. working pressure	MPa	0 (≈0 psi, 0 bar)				
Proof pressure	MPa	1.5 (≈220 psi, 15 bar)				
Ambient temperature	°C	5 (41°F) to 50 (122°F)				
Fluid temperature	°C	5 (41°F) to 50 (122°F)				
Lubrication		Not required				
Degree of protection		Dust-proof				
Operating angle	°	90				
Port size	Rc	1/4	1/4	3/8	1/2	3/4
Weight	kg	0.7	2.0	1.9	1.9	1.8

Flow characteristics

Model No.	Port size	IN→CYL1/CYL2		CYL1/CYL2→EXH	
		C[dm^3/(s·bar)]	b	C[dm^3/(s·bar)]	b
HMV$^{C}_{O}$2	1/4	1.5	0.31	1.6	0.28
HSV$^{C}_{O}$2	1/4	7.2	0.74	7.2	0.73
	3/8	10.2	0.32	10.1	0.34
	1/2	10.0	0.32	10.2	0.33
	3/4	10.3	0.36	10.2	0.36

*1 : Effective cross-sectional area S and sonic conductance C are converted as S ≈ 5.0 x C.

How to order

● Miniature

HMV C 2 – 8 – 4 H

● Standard

HSV C 2 – 10 – 4 H

Ⓐ Model No.
Ⓑ Solenoid position
Ⓒ Port size
Ⓓ Piping

Code	Description	Ⓐ Model No. HMV	Ⓐ Model No. HSV
Ⓑ Solenoid position			
C	3-position all ports closed	●	●
O	3-position ABR connection	●	●
Ⓒ Port size			
8	Rc1/4	●	●
10	Rc3/8		●
15	Rc1/2		●
20	Rc3/4 (vertical piping not available.)		●
Ⓓ Piping			
H	Side piping	●	●
V	Vertical piping (not compatible with a port size of Rc 3/4.)	●	●

Internal structure and parts list

HMVC2-8-4H
HSVC2-8 to 20-4H

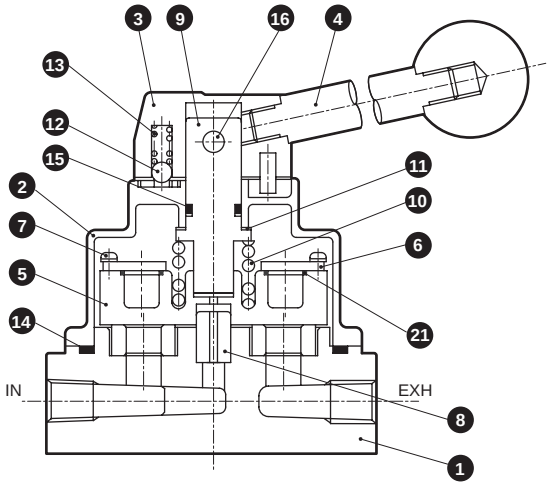

HMVO2-8-4H
HSVO2-8 to 20-4H

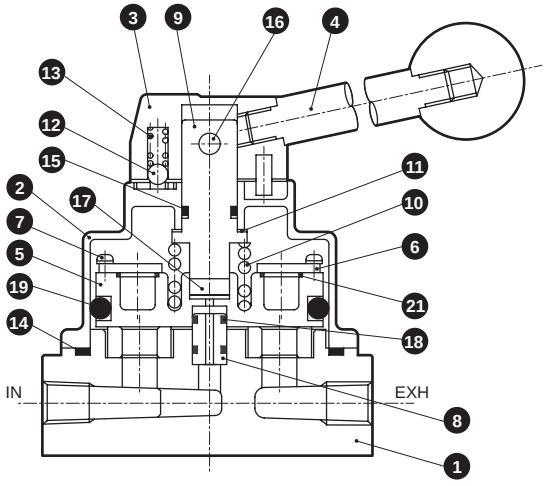

HMVC2-8-4V
HSVC2-8 to 15-4V

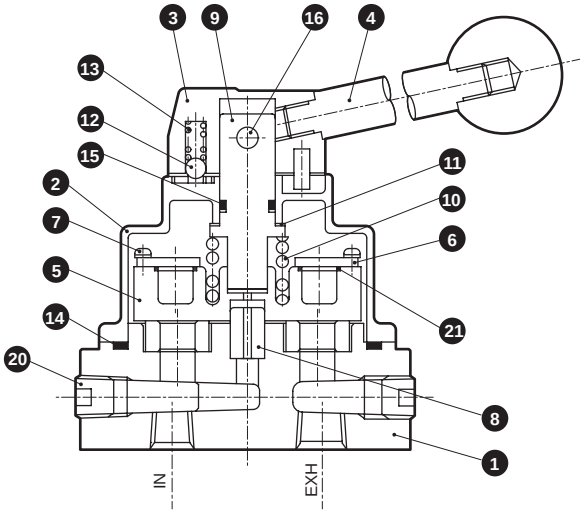

HMVO2-8-4V
HSVO2-8 to 15-4V

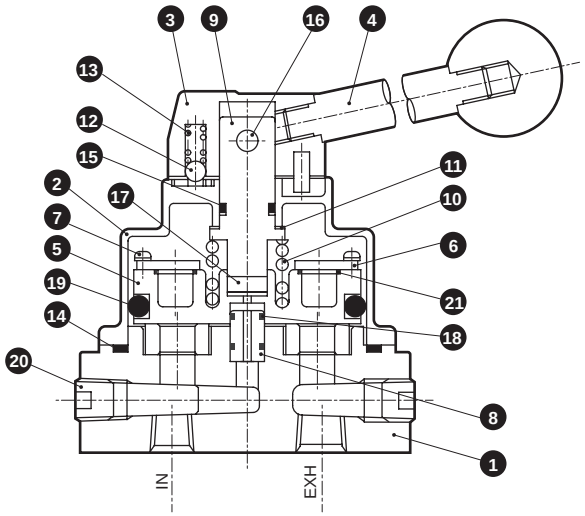

Main parts list

No.	Part name	Material	No.	Part name	Material
1	Body assembly	Zinc alloy die-casting tetrafluoroethylene resin (other than port size 20)	11	Washer	Special polyethylene
			12	Ball	Stainless steel
			13	Spring	Stainless steel
		Aluminum alloy die-casting tetrafluoroethylene resin (port size 20 only)	14	O-ring	Nitrile rubber
			15	O-ring	Nitrile rubber
			16	Pin	Steel
2	Cover assembly	Zinc alloy die-casting	17	Spindle guide	Steel (HSVO2 only)
3	Handle head	Zinc alloy die-casting	18	O-ring	Nitrile rubber
4	Handle assembly	Steel, urea resin	19	O-ring	Nitrile rubber
5	Slide ring	Zinc alloy die-casting	20	Hexagon socket head cap plug	Steel
6	Plate	Steel	21	Gasket	Nitrile rubber
7	Cross-recessed tapping screw	Steel			
8	Rod	Steel			
9	Spindle	Stainless steel			
10	Spring	Piano wire			

Dimensions

HMVC2-8-4H,4V
HMVO2-8-4H,4V

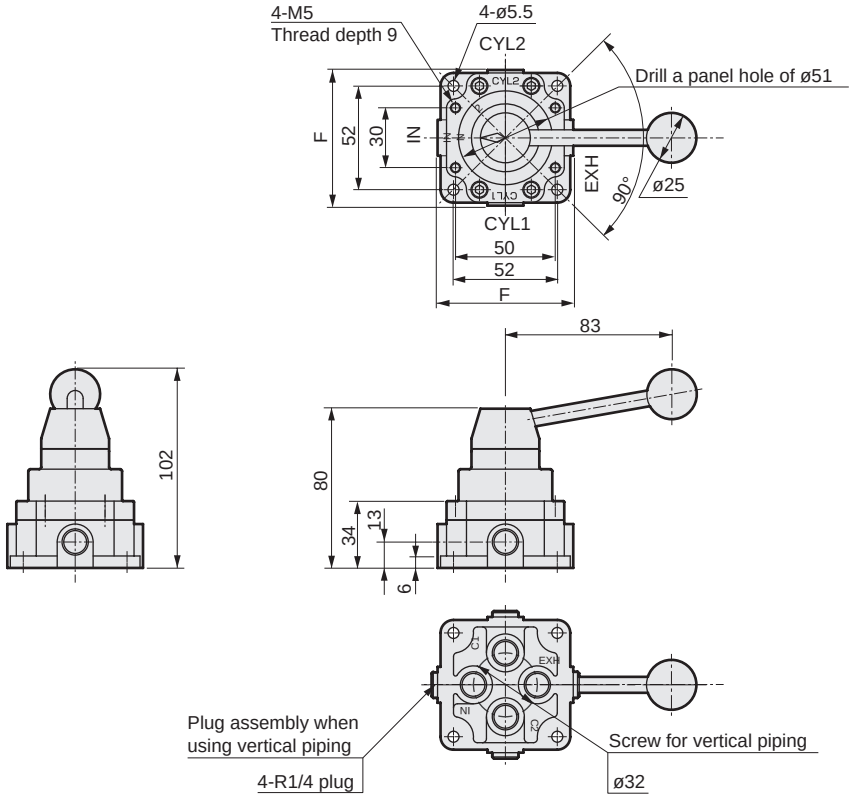

HSVC2-8 to 20-4H, 4V
HSVO2-8 to 20-4H, 4V

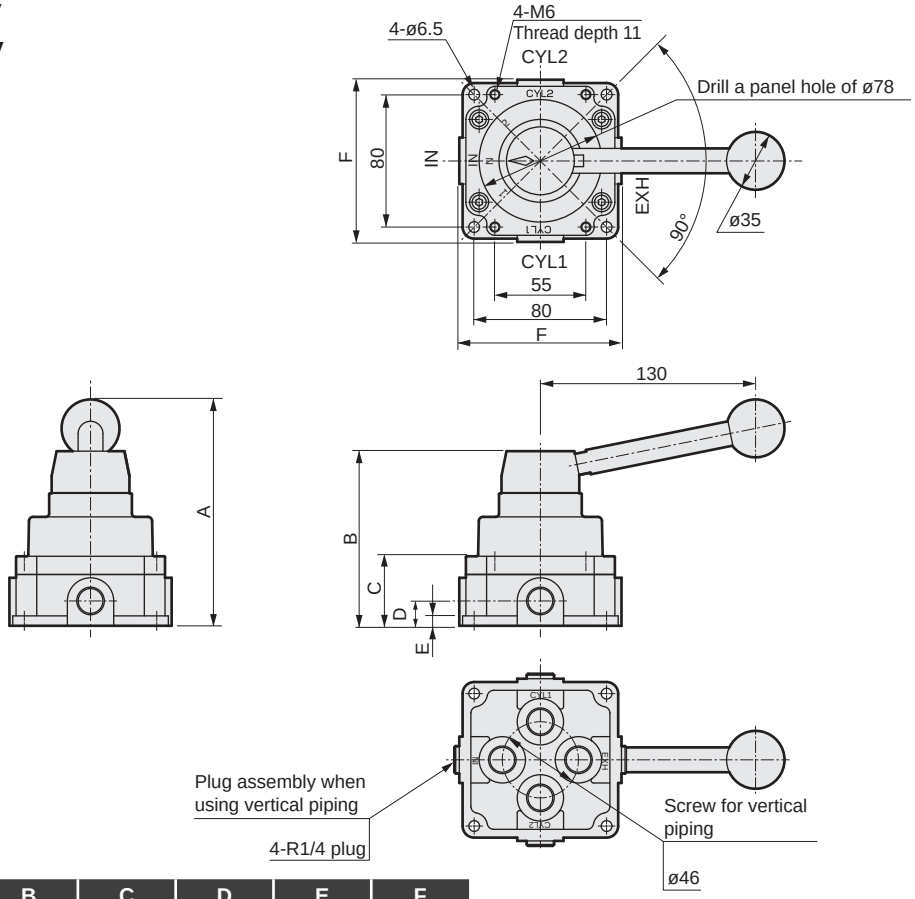

Model No.	A	B	C	D	E	F
HMV*2-8-4H						68
HMV*2-8-4V						74
HSV*2-8 to 15-4H	132	105	42	15	6	98
HSV*2-8 to 15-4V	132	105	42	15	6	104
HSV*2-20-4H	137	110	47	18	10	98

Pneumatic components

Safety Precautions

Be sure to read this section before use.
Refer to Intro Page 59 for general precautions for using valves.

Product-specific cautions: Manual selector valve HMV/HSV Series

Design/selection

⚠ CAUTION

■ In locations with a lot of dust, prevent entry of dust by attaching a silencer to the EXH port or through a similar method.

■ The flow of air when switching is expressed by the letters indicated by the arrows on the tip of the switching handle.
When 1: IN → CYL1, CYL2 → EXH
When 2: IN → CYL2, CYL1 → EXH
When N: all ports closed
or CYL1/2 → EXH (ABR) connection

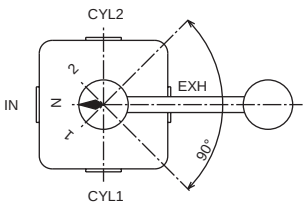

■ Switching different pressures (switching 2 types of pressures) is enabled by configuring the higher pressure on the IN side and the lower pressure on the EXH side.
(1) If the higher pressure is not constantly applied on the IN side, this may lead to defective switching or air leakage.
(2) Use a regulator with relief on the EXH side.

■ The main valve is a slide valve structure and there is internal leakage. The cylinder stopping position may change or pressure drop may occur due to internal leakage.

■ For use with a 2-position valve, a 3-position all ports closed can be substituted. (N: Consider the neutral position as the transition period of the operation between 1⇄2.)

■ When switching the handle position between N⇄1 or N⇄2, there are positions that instantaneously connect to all ports.

■ The manual operating force for the first operation after not being in operation for a while will be greater.

Mounting, installation and adjustment

⚠ CAUTION

■ Be sure to install the piping for the air supply from IN.

■ With the vertical piping specifications, a hex socket plug will protrude in order to mask the thread for lateral piping. Refer to the dimensions for detailed dimensions.

■ For use with a panel mount, use a metric threaded component (HMV*2...4-M5, HSV*2...4-M6). Refer to the dimensions for details.

■ In consideration of panel mount installation, the handle assembly is shipped as an attachment.

2QV/3QV

Quick valve

2, 3-port valve



Features

Straight flow path and large effective sectional area.
Flame-resistant resin has been adopted as a standard material. (UL94 Standards V-0 equivalent)
Manifold enabled by optional bracket.
2- and 3-port valves are available.

CONTENTS

● Quick valve with push-in fitting (2QV/3QV)	1846
⚠ Safety precautions	1851



Quick valve

2QV/3QV Series

● Port size: Push-in fitting ø4, ø6, ø8, ø10, ø12, R1/8 to R1/2

JIS symbol

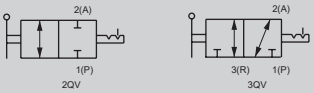

RoHS CAD

Features

- Straight flow path and large effective sectional area.
- Flame-resistant resin has been adopted as a standard material. (UL94 Standards V-0 equivalent)
- Manifold enabled by optional bracket.
- 2- and 3-port valves are available.

Specifications

Item	2QV/3QV
Working fluid	Air
Max. working pressure MPa	1.0 (≈150 psi, 10 bar)
Min. working pressure kPa	-100 (≈-15 psi, -1 bar) (*1)
Proof pressure MPa	1.5 (≈220 psi, 15 bar)
Fluid temperature °C	0 (32°F) to 60 (140°F)
Ambient temperature °C	0 (32°F) to 60 (140°F)
Switching angle °	90
Tube used	Soft nylon tube (tube F-15**) Urethane tube (tube U-95**, NU-**)
Mounting orientation	Arbitrary

*1: When using urethane tube (U-95**, NU-**) at vacuum, use an insert ring.
*2: Lubricant is used, so oil-prohibited specification is not available.

Operational explanation

● 2-port valve (2QV Series)

[Closed state] [Open state]

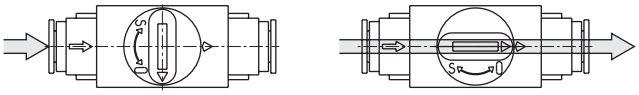

● 3-port valve (3QV Series)

[Exhaust status] [Air supply status]

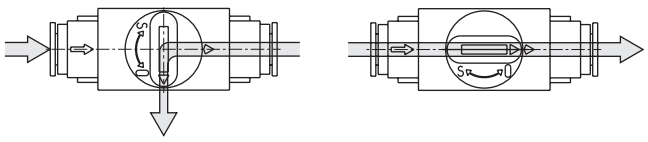

Applications

● Residual pressure exhaust valve in the air cylinder circuit

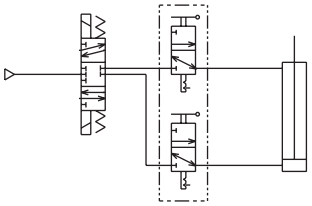

Quick valve (3QV)

● Stop valve in air blow circuit

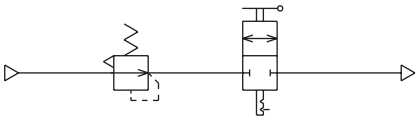

Quick valve (2QV)

Clean-room specifications (Catalog No. CB-033SA)

● Anti-dust generation structure for use in cleanrooms

2QV- ····· P70

Specifications for rechargeable battery (Catalog No. CC-1226A)

● Design compatible with rechargeable battery manufacturing process

2QV- ····· P4

How to order

● Quick valve

2 **QV** - **04-04**

Ⓐ Valve

Ⓑ Port size (P-port) - (A port)

	Code	Description			Bracket *
	Ⓐ Valve				
	2	2-way valve			
	3	3-way valve			
	Ⓑ Port size (P-port) - (A port)				
		IN side	**-**	**OUT side**	
Standard	**04-04**	Push-in fitting ø 4	-	Push-in fitting ø4	**2QV-P1**
Standard	**06-06**	Push-in fitting ø 6	-	Push-in fitting ø6	
Standard	**08S-08S**	Push-in fitting ø 8	-	Push-in fitting ø8	
Standard	**08-08**	Push-in fitting ø 8	-	Push-in fitting ø8	**2QV-P2**
Standard	**10-10**	Push-in fitting ø10	-	Push-in fitting ø10	
Standard	**12-12**	Push-in fitting ø12	-	Push-in fitting ø12	
Option	**6A-04**	R1/8	-	Push-in fitting ø4	**2QV-P1**
Option	**6A-06**	R1/8	-	Push-in fitting ø6	
Option	**8A-06**	R1/4	-	Push-in fitting ø6	
Option	**8A-08S**	R1/4	-	Push-in fitting ø8	
Option	**10A-08**	R3/8	-	Push-in fitting ø8	**2QV-P2**
Option	**10A-10**	R3/8	-	Push-in fitting ø10	
Option	**15A-10**	R1/2	-	Push-in fitting ø10	
Option	**15A-12**	R1/2	-	Push-in fitting ø12	
Option	**04-6A**	Push-in fitting ø 4	-	R1/8	**2QV-P1**
Option	**06-6A**	Push-in fitting ø 6	-	R1/8	
Option	**06-8A**	Push-in fitting ø 6	-	R1/4	
Option	**08S-8A**	Push-in fitting ø 8	-	R1/4	
Option	**08-10A**	Push-in fitting ø 8	-	R3/8	**2QV-P2**
Option	**10-10A**	Push-in fitting ø10	-	R3/8	
Option	**10-15A**	Push-in fitting ø10	-	R1/2	
Option	**12-15A**	Push-in fitting ø12	-	R1/2	
Option	**6A-6A**	R1/8	-	R1/8	**2QV-P1**
Option	**8A-8A**	R1/4	-	R1/4	
Option	**10A-10A**	R3/8	-	R3/8	**2QV-P2**
Option	**15A-15A**	R1/2	-	R1/2	

* For 2- and 3-port valves, the bracket is common.
* Note that this may differ according to the body size.

⚠ Select the reverse regulator (R*100) or reverse filter regulator (W*100) when installing the 3QV onto the primary side of the regulator or filter regulator.

Internal structure and parts list

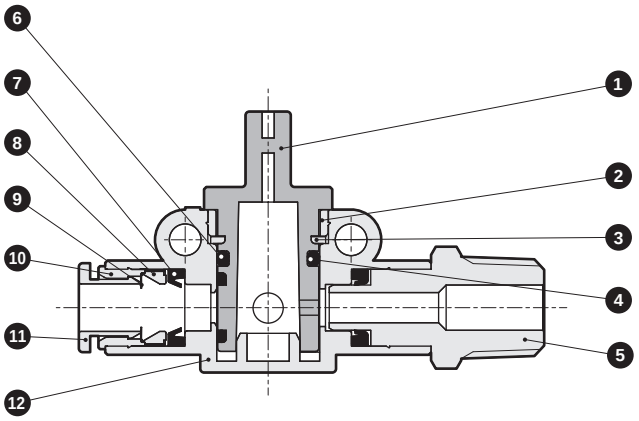

Parts list

No.	Part name	Material
1	Rotary shaft	PBT (UL94V-0 or equivalent)
2	Stopper	Copper alloy (electroless nickeling treatment) *1
		Stainless steel *2
3	Ring	Steel
4	O-ring	Nitrile rubber
5	Nipple	Copper alloy (electroless nickeling treatment)
6	O-ring	Nitrile rubber
7	Packing	Nitrile rubber
8	Chuck holder	Polyetherimide
9	Chuck	Stainless steel
10	Outer ring	Copper alloy (electroless nickeling treatment)
11	Push ring	PBT (UL94V-0 or equivalent)
12	Body	PBT (UL94V-0 or equivalent)

*1: The "A" dimensions in the outline drawing apply to the "18" model material.
*2: The "A" dimensions in the outline drawing apply to the "22" model material.

Dimensions CAD

● Port size
·P-port (push-in fitting)/A-port (push-in fitting)

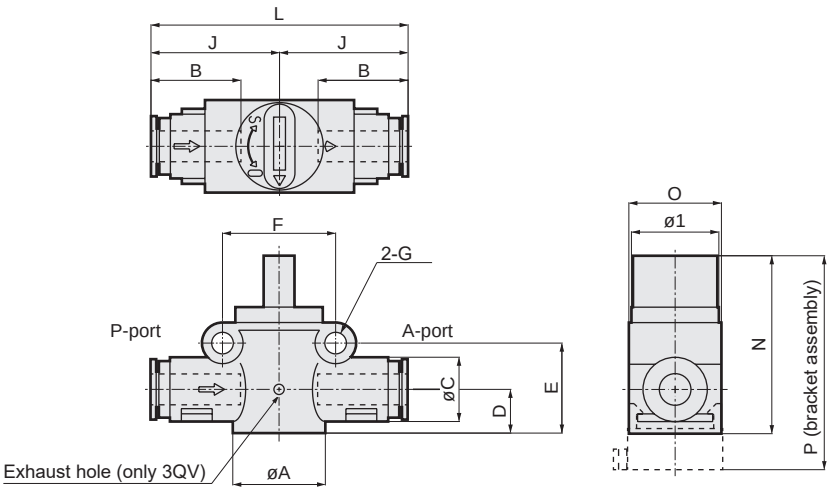

Compatible tube O.D. (mm)		Model No.	A	B	C	D	E	F	G	I	J	L	N	O	P	Weight	Eff. X-sectional area (mm²)	
P-port	A-port															(g)	P→A	A→R
ø4	ø4	2/3QV-04-04	18	16	12.5	8.5	17.5	22	4.2	17	25	50	34.5	18	41.5	20	4.2	1.8
ø6	ø6	2/3QV-06-06		17.5												21	9.3	
ø8	ø8	2/3QV-08S-08S		19	14.5						26.5	53				23	10.2	
ø8	ø8	2/3QV-08-08	22	19	17.5	10.7	22.8	26.5	4.2	17	31.5	63	39.8	22	46.8	34	17.5	4.0
ø10	ø10	2/3QV-10-10		21.5												35	22.5	
ø12	ø12	2/3QV-12-12		23	20						33	66				38	22.5	

* Tolerance of effective cross-sectional area is ±10%.

● Port size
·P-port (male thread)/A-port (push-in fitting)

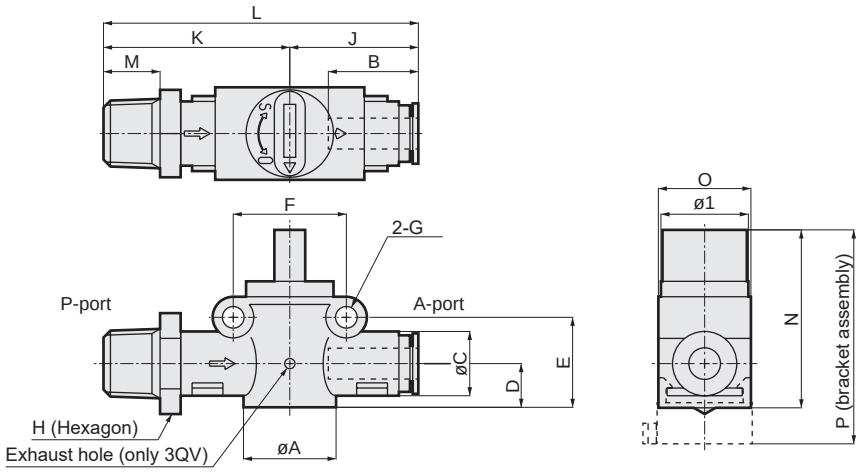

Port thread R	Compatible tube O.D. (mm)	Model No.	A	B	C	D	E	F	G	H	I	J	K	L	M	N	O	P	Weight	Eff. X-sectional area (mm²)	
P-port	A-port																		(g)	P→A	A→R
1/8	ø4	2/3QV-6A-04	18	16	12.5	8.5	17.5	22	4.2	14	17	25	33.5	58.5	8	34.5	18	41.5	26	4.2	1.8
1/8	ø6	2/3QV-6A-06		17.5															32	9.3	
1/4	ø6	2/3QV-8A-06								17			38	63	11				35	9.3	
1/4	ø8	2/3QV-8A-08S		19	14.5							26.5		64.5					40	10.2	
3/8	ø8	2/3QV-10A-08	22	19	17.5	10.7	22.8	26.5	4.2	17	17	31.5	44.5	76	12	39.8	22	46.8	57	16.3	4.0
3/8	ø10	2/3QV-10A-10		21.5						19									63	21.4	
1/2	ø10	2/3QV-15A-10								22			47.5	79	15				76	21.4	
1/2	ø12	2/3QV-15A-12		23	20.0							33	49	82					85	21.4	

* Tolerance of effective cross-sectional area is ±10%.

Dimensions

● Port size
·P-port (push-in fitting)/A-port (male thread)

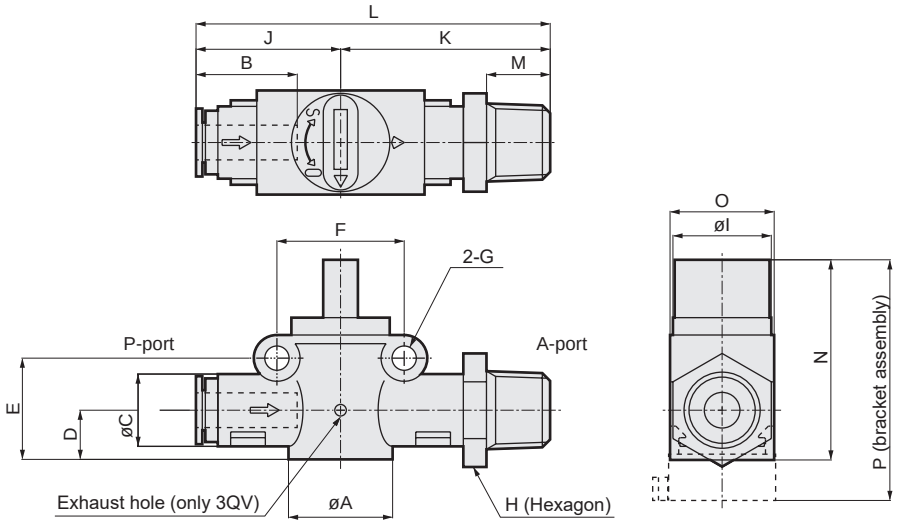

Compatible tube O.D. (mm)	Port thread R	Model No.	A	B	C	D	E	F	G	H	I	J	K	L	M	N	O	P	Weight	Eff. X-sectional area (mm²)	
P-port	A-port																		(g)	P→A	A→R
ø4	1/8	2/3 QV-04-6A	18	16	12.5	8.5	17.5	22	4.2	14	17	25	33.5	58.5	8	34.5	18	41.5	26	3.5	1.8
ø6	1/8	2/3 QV-06-6A		17.5															32	9.3	
ø6	1/4	2/3 QV-06-8A								17			38	63	11				35	9.3	
ø8	1/4	2/3 QV-08S-8A		19	14.5							26.5		64.5					40	10.2	
ø8	3/8	2/3 QV-08-10A	22	19	17.5	10.7	22.8	26.5	4.2	17	17	31.5	44.5	76	12	39.8	22	46.8	57	15.8	4.0
ø10	3/8	2/3 QV-10-10A		21.5						19									63	21.4	
ø10	1/2	2/3 QV-10-15A								22			47.5	79	15				76	21.4	
ø12	1/2	2/3 QV-12-15A		23	20.0							33	49	82					85	21.4	

* Tolerance of effective cross-sectional area is ±10%.

● Port size
·P-port (male thread)/A-port (male thread)

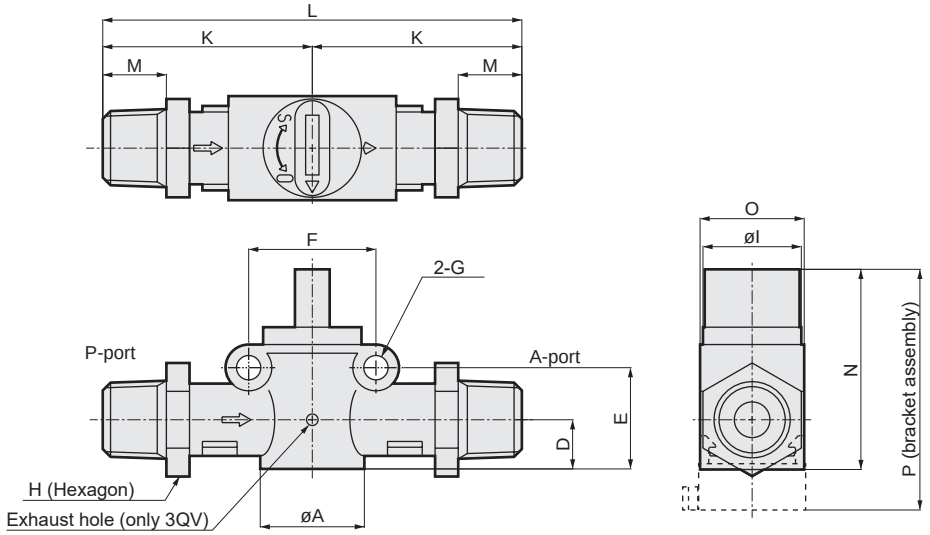

Port thread R		Model No.	A	D	E	F	G	H	I	K	L	M	N	O	P	Weight	Eff. X-sectional area (mm²)	
P-port	A-port															(g)	P→A	A→R
1/8	1/8	2/3 QV-6A-6A	18	8.5	17.5	22	4.2	14	17	33.5	67	8	34.5	18	41.5	42	9.5	1.8
1/4	1/4	2/3 QV-8A-8A						17		38	76	11				48	9.5	
3/8	3/8	2/3 QV-10A-10A	22	10.7	22.8	26.5	4.2	19	17	44.5	89	12	39.8	22	46.8	90	21.4	4.0
1/2	1/2	2/3 QV-15A-15A						22		47.5	95	15				116	21.4	

* Tolerance of effective cross-sectional area is ±10%.

Dimensions

● Dedicated bracket

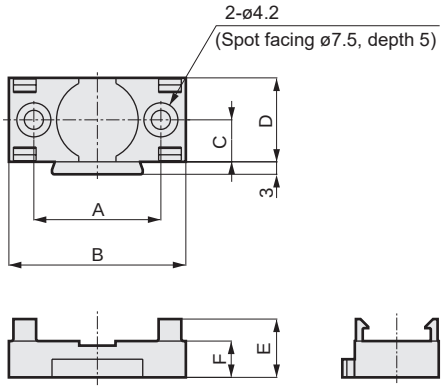

● Mounting pitch dimension for manifold

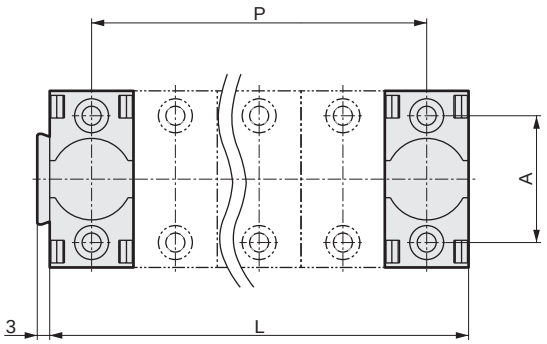

Model No.	A	B	C	D	E	F	P	L	Subject A dimension	Weight g
2QV-P1	28	39	9.25	18.5	13	8	Dx(n-1)	D x n	18	5.4
2QV-P2	32	44	11.25	22.5	12.5	8			22	7.2

n = Station No.

Introduction of custom order product

A quick valve with air lamp is available as a customized order part. Contact CKD for details. Contact CKD for details.
Note: Note that the ø12 diameter is not available.

Specifications

1 MPa = 10 bar

Item	Air lamp
Working fluid	Air
Working pressure MPa	0.05 (≈7.3 psi) to 0.8 (≈120 psi)
Fluid temperature °C	0 (32°F) to 60 (140°F)
Ambient temperature °C	0 (32°F) to 60 (140°F)
Display color	Red, green

Applications
·Cylinder residual pressure exhaust

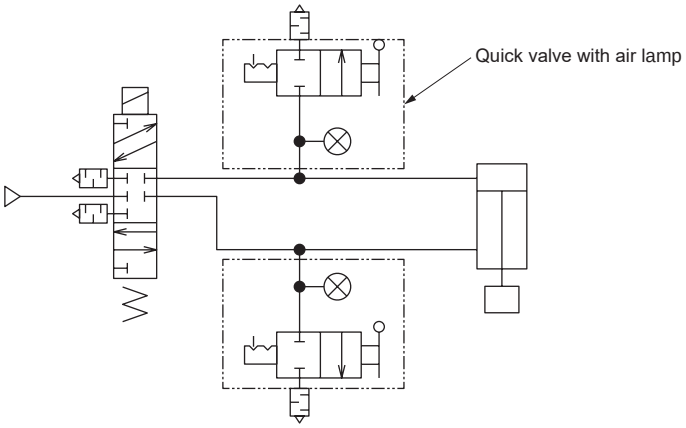

Example of assembly

● When using 2QV-06-06 with air lamp

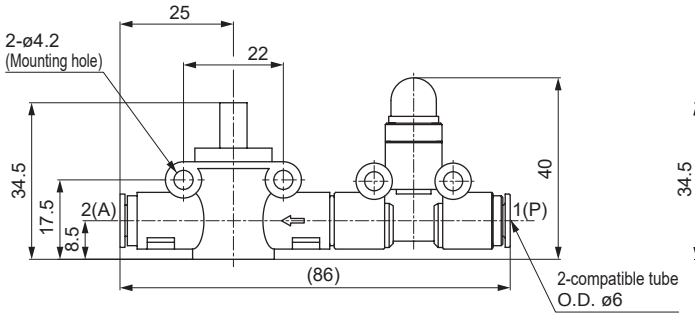

● When using 2QV-08S-08S with air lamp

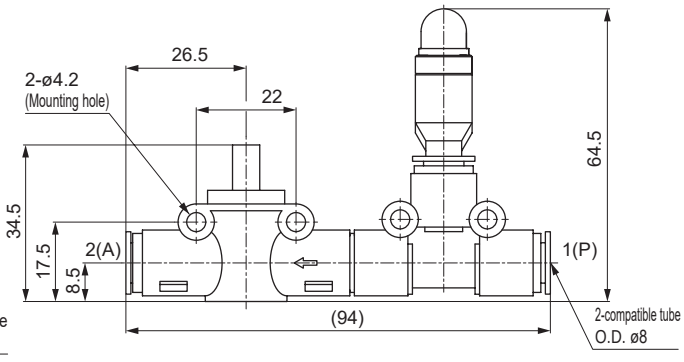

● Types 3QV-06 to 10 with air lamp are also available. Contact CKD for details.

Product-specific cautions: Quick valve 2QV/3QV Series

Design/selection

⚠WARNING

- Use the product within specifications.
  Use with fluid other than compressed air or at a pressure or temperature exceeding the specifications could result in rupture, tube dislocation, or leakage.
- Avoid installing this product outdoors or where it is exposed to direct sunlight.

⚠CAUTION

- Confirm before use that the product will withstand the working environment.
  - This product cannot be used in environments where functional obstacles could occur.
    Such environments include high temperatures, chemical atmospheres, or where chemical liquids, vibration, moisture, dripping water, or gases are present. Environments where ozone is generated. Outdoors or where the product could be subject to direct sunlight; or where cutting oil, coolant, or spatter could come in contact or where static electricity could pose a problem.
- Confirm whether PTFE can be used.
  - The sealant contains PTFE (tetrafluoroethylene resin) powder. Check that this poses no problem during use.
- Consult with CKD if ozone is generated in the supplied air. (Ozone-proof products are available.)
- Avoid using this product in a hot humid place, outdoors or where it is subject to direct sunlight.

Mounting, installation and adjustment

⚠WARNING

- Securely insert the tube until it contacts the fitting tube end, and check that it does not come off the fitting.
- Stop air flow and confirm that there is no residual pressure before replacing the tube.

Piping

⚠CAUTION

- Observe the following precautions when using nylon tubes or urethane tubes for piping material.
  - Use the designated tube and CKD plastic plug (GWP Series). Do not use a metal plug as doing so may cause problems.
    Tube outer diameter accuracy
    · Polyamide tube.....Within ±0.1 mm
    · Polyurethane tube
    (ø6 or less).....Within ±0.1 mm
    (ø8 up).....Within $^{+0.1}_{-0.15}$ mm
    Use a tube with hardness of 92˚ or more. If a tube that does not satisfy the diameter accuracy or hardness is used, the chucking force may decrease, the tube may come off or be difficult to insert.
    Contact CKD when using a non-designated tube or plug.
  - Cut the tube with a dedicated cutter and always at a right angle.
  - Use the tubing so that it does not become worn or damaged. Tubing could collapse or rupture.
  - A used tube could be deteriorated or deformed and so always use a new tube.
  - Do not let the tube directly contact other surfaces, as there is a risk of wear or damage.
- Do not use this product for applications involving constant rotation or oscillations, or in which tubes move violently.
- Use the tubing so that it is within the min. bending radius and long enough to avoid sharp bends.
  - Consider changes in tubing length caused by pressure when tubing is connected, and provide sufficient length within the min. tube bending radius.
- Always flush just before piping pneumatic components.
  - Any foreign matter that has entered during piping must be removed so it does not enter the pneumatic components. Remove all swarf and foreign debris generated during piping and tube insertion before use.
- When supplying compressed air after connecting pipes, do not suddenly apply high pressure.
  - The pipe connection could dislocate, causing the pipe tube to fly out, leading to accidents.
- After connecting piping, always check all pipe connections for air leaks before supplying compressed air.
  - Apply a leakage detection agent on pipe connections with a brush, and check for air leaks.
- Handling push-in fittings and tubes
  - For handling of push-in fittings and tubes, refer to Warnings and Cautions of fittings/tubes (CB-024SA General Pneumatic Auxiliary Components).

Mounting, installation and adjustment

⚠CAUTION

■ Use appropriate torque to tighten the pipes when connecting them.

● The purpose is to prevent air leakage and damage to bolts. First tighten the bolts by hand to ensure that the threads are not damaged, then use a tool.
Check that the tool's hexagon face and wrench are the correct size.
[Reference value]

Port thread	Tightening torque N·m
R1/8	3 to 5
R1/4	6 to 8
R3/8	13 to 15
R1/2	16 to 18

* The above values apply when partner threads are JIS B 0203 piping tapered female threads (material C3604BD).

■ Connect piping so that connections are not dislocated by equipment movement, vibration, tension, etc.

● Control of actuator speed will be disabled if piping on the exhaust side of the pneumatic circuit is disengaged.
● When using the chuck holding mechanism, the chuck may be released, creating a hazardous state.
● Confirm that the tube has been inserted properly, and make sure that there is no tension during use.
The tube could be dislocated or damaged if there is any tension.

■ Make sure that there is no torsion, tension or moment load applied to the fitting or the tube.

■ Do not tighten while pressure is applied.

■ When using a urethane rubber tube (U-95□□, NU-□□) for vacuum, use an insert ring.

■ If the manifold is installed with a focus on space-saving, manual operation may be difficult. Operate by inserting a screwdriver, etc., into the slot on the top of the knob.

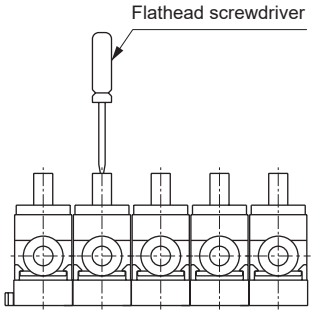

■ If manifolds are installed with a priority on manual operation, valves can be operated easily by installing them with spaces in between.

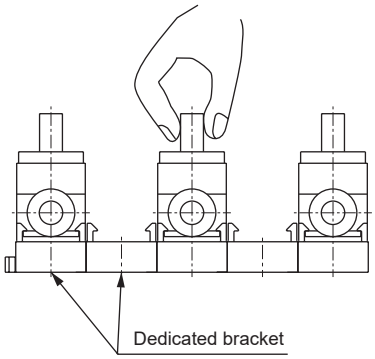

Use/maintenance

⚠CAUTION

■ Operating angle of this product is 90˚.
Do not turn the product more than 90˚.

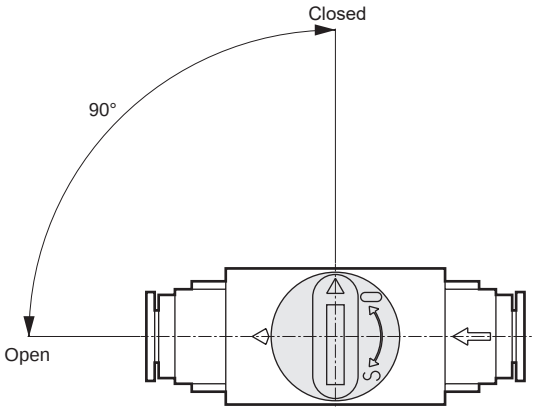

■ The dedicated bracket's hooks can be damaged by external force. Use with the proper means.

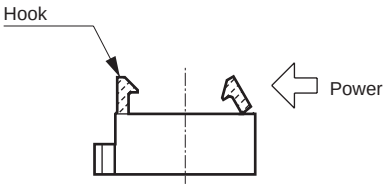

■ How to use bracket

(1) Fix the bracket before use. To mount, insert the product at a slant into the bracket, and then fit into hooks.

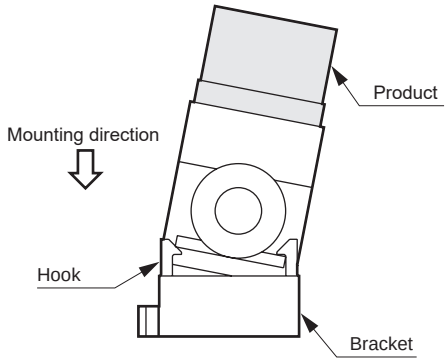

(2) To remove the product, tilt it slightly to the side, and release one hook.

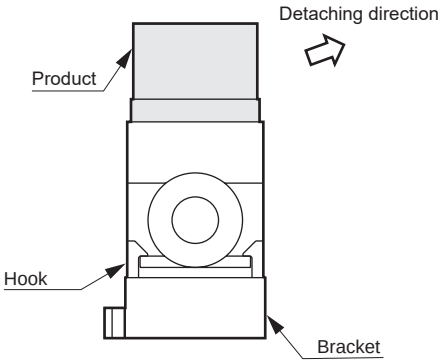

(3) When mounting the manifold, insert the bracket projection into the other bracket's groove.

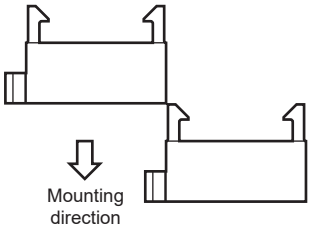

SKH

Shock absorbing valve

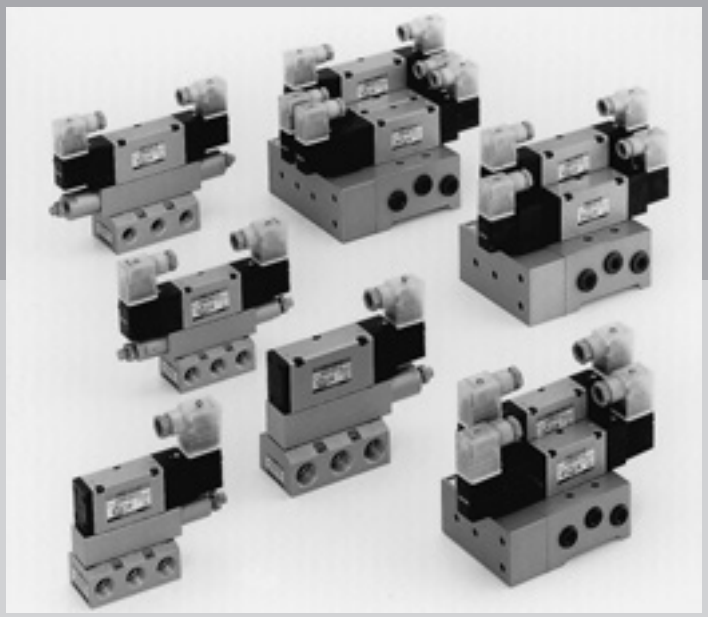

Overview

The SKH shock absorbing valve unit suppresses impact at the end of the cylinder stroke and realizes a soft stop. Suitable for operating cylinders of up to ø125.

Features

Shockless stop

As the cushioning effect is adjusted with pressure, there is no bound phenomenon. It is possible to vary the deceleration G upon stopping from a slow stop to a rapid stop with the setting for the cushion stroke.

Multi-functional and compact

As air cylinder thrust is used, it is possible to absorb a large amount of kinetic energy with only the valve. As very little heat is generated due to the absorption of energy, there is no limit on the frequency of use.

Easy installation

There is no need for additional piping work along with the expansion of cushion devices. (Piping with only the 5 ports of P/R/A/B is OK)

Changing the sequence program when cushion equipment is expanded is easy, requiring only switching of the solenoid valve for driving the air cylinder with the input of an external signal.

Easy maintenance

Both the solenoid valve and spacer relief valve can be replaced easily with 3 bolts. The electrical wiring can also be replaced easily as it is DIN terminal.

CONTENTS

Series variation	1856
Basic operational principle/cushion principle	1857
● Shock absorbing valve (SKH)	1858
Technical data	
(1) Piping connection diagram	1869
(2) Example of piping connections and time chart diagram	1870
Q&A	1872
⚠ Safety precautions	1874

	Model No.		Cylinder bore size	Appearance	Circuit configuration diagram	PLC I/O	Piping	Page
Variable speed unit	SKH-320		ø25 to ø50	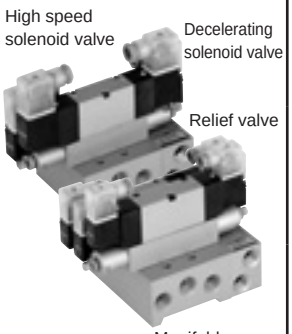	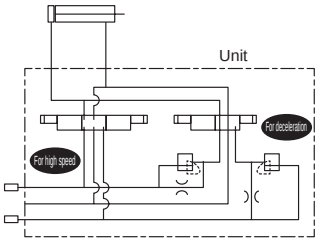	IN 4-point (Sensor) OUT 4-point (Valve)	1) As the circuit unit for deceleration is integrated with the control solenoid valve, it is possible to drive the cylinder with only the unit. 2) The number of steps required for piping is the same as the cylinder driving circuit.	1858
	SKH-420		ø40 to ø80					
	SKH-520		ø63 to ø125					
Deceleration unit	Both ends deceleration	SKH-328	ø25 to ø50	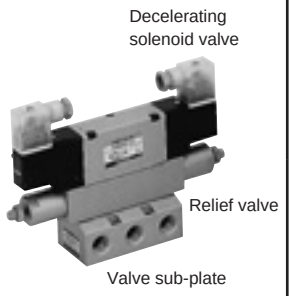	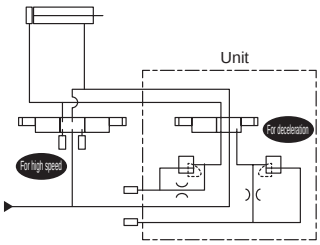	IN 2-point (Sensor) OUT 2-point (Valve)	As this is only a circuit unit for deceleration, a deceleration circuit can be structured by connecting additional piping to the solenoid valve circuit for control.	1858
		SKH-428	ø40 to ø80					
	One-sided deceleration	SKH-318	ø25 to ø50	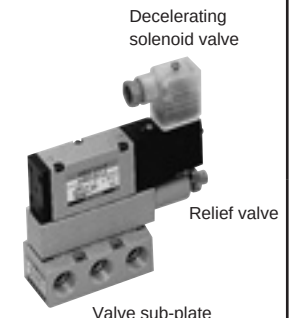	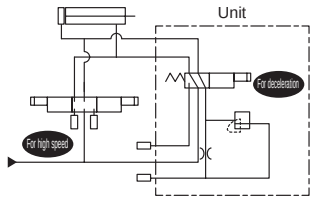	IN 1-point (Sensor) OUT 1-point (Valve)	1) As this is only a circuit unit for deceleration, a deceleration circuit can be structured by connecting additional piping to the solenoid valve circuit for control. 2) As this is a single-side deceleration unit, install the unit near the cylinder port.	1858
		SKH-418	ø40 to ø80					

Basic operational principle

When starting to move, the air cylinder moves at a high speed by opening the solenoid valve for high speed and releasing the exhaust air into the atmosphere with a great amount of force.
When the intermediate sensor (SW2) for operation of the cushion operates, the solenoid valve for high speed is closed and the flow of the exhaust air is controlled with a relief valve to decelerate the air cylinder.
Along with the piston movement, the exhaust pressure P will gradually increase up to the pressure configured by the springs of the relief valve to create an air brake working in the opposite direction of the thrust, causing the air cylinder to softly decelerate and eventually stop.

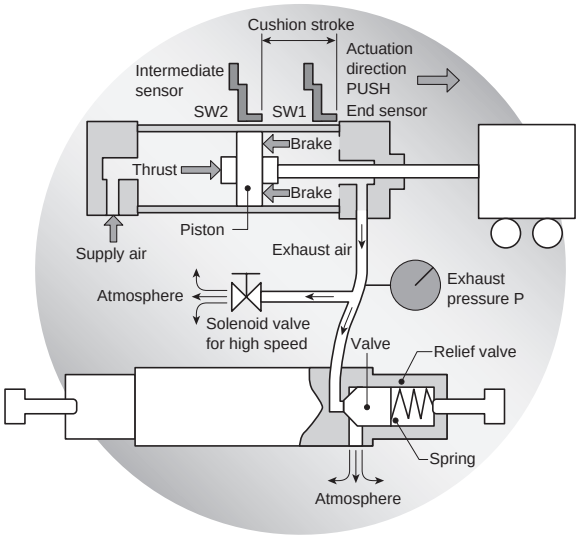

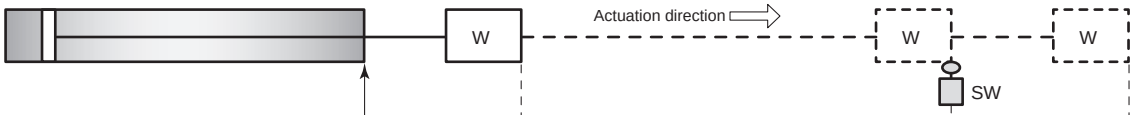

Fig. 1

Cushion principle

(Pressure control method)

Consider the situation where the cylinder operates in the direction of the arrow view as in the figure at right. By switching the solenoid valve and the air supply side pressure and exhaust side pressure changing as in Fig. 2, the cylinder will start moving. While the cylinder is in operation, thrust is acting in the same direction as the operating direction due to the difference between the air supply and exhaust pressures.
The exhaust pressure is controlled by switching the flow of air on the exhaust side with an external signal (such as a proximity switch) at "L1" right before the stroke end.
(With this unit, the exhaust pressure is controlled with the use of a relief valve.)
For this reason, as the cylinder displacement moves closer to the end as in Fig. 2, the exhaust pressure rises and changes the difference in pressure with the air supply side, the thrust of the cylinder changes along with this, and the motion of the cylinder gradually decelerates and eventually comes to a stop.
By setting the cushion stroke range "L1" to be longer during adjustment, the decelerating distance of the cylinder will become longer to allow for a smooth stop.
(In this case, the cushion time "T" will become longer.)

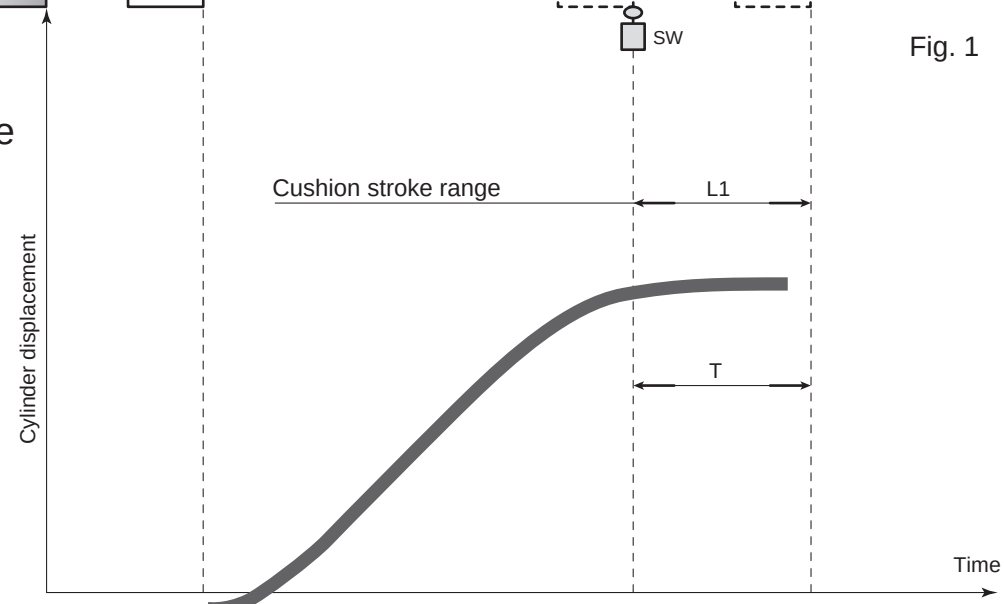

Fig. 2

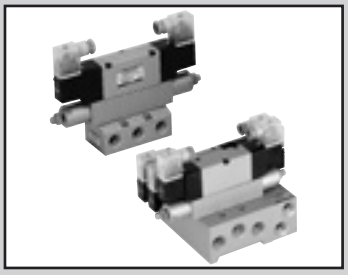

Shock absorbing valve

SKH Series

● Cylinder bore size: ø25 to ø125

RoHS CAD

Common specifications

Variable speed unit	Deceleration unit	Single-side deceleration unit
By integrating the solenoid valve for driving the air cylinder, the solenoid valve for deceleration, and the relief valve, it becomes possible to easily decelerate and stop smoothly at the end.	By additionally installing this unit in an existing air cylinder driving circuit, it becomes possible to realize smooth decelerating and stopping effects at the end in accordance with a high speed drive.	By forming a unit with the end control on only one side of an existing air cylinder driving circuit, the solenoid valve for deceleration, and the relief valve, it becomes possible to decelerate and stop smoothly.

Item	2 SKH3305	2 SKH4305	2 SKH5305	2 SKH3385	2 SKH4385	SKH318	SKH418
Working fluid	Compressed air						
Valve and operation	Pilot operated soft spool valve						
Basic solenoid valve	4KB3	4KB4		4KB3	4KB4	4KB3	4KB4
Working pressure MPa	0.3 (≈44 psi, 3 bar) to 0.7 (≈100 psi, 7 bar)						
Proof pressure MPa	1.0 (≈150 psi, 10 bar)						
Ambient temperature (*1) °C	-5 (23°F) to 50 (122°F) (no freezing)						
Fluid temperature °C	5 (41°F) to 50 (122°F)						
Lubrication	Not required						

*1: The ambient temperature indicates the temperature for storage and upon installation, which will differ from the fluid temperature during operation.
*2: Effective cross-sectional area S and sonic conductance C are converted as S ≈ 5.0 x C.
*3: The flow characteristics of SKH**0 are values for the direction of A/B ⇒ R when only the valve for high speed is operated.
*4: The flow characteristics of SKH**8 are values for the direction of P ⇒ A/B.

Electrical specifications

Item			2 SKH3305	2 SKH4305	2 SKH5305	2 SKH3385	2 SKH4385	SKH318	SKH418
Rated voltage V	AC		100,200(50/60 Hz)						
	DC		24						
Voltage fluctuation range			±10%						
Starting current A	AC	100 V	0.092/0.084		0.138/0.126	0.046/0.042			
		200 V	0.046/0.042		0.069/0.063	0.023/0.021			
	DC	24 V	-		-	-			
Holding current A	AC	100 V	During high speed: 0.046/0.042 During low speed: 0.023/0.021		During high speed: 0.069/0.063 During low speed: 0.023/0.021	0.023/0.021			
		200 V	During high speed: 0.028/0.022 During low speed: 0.014/0.011		During high speed: 0.042/0.033 During low speed: 0.014/0.011	0.014/0.011			
	DC	24 V	During high speed: 0.15 During low speed: 0.075		During high speed: 0.225 During low speed: 0.075	0.075			
Power consumption W	AC	100 V	During high speed: 3.6/3.0 During low speed: 1.8/1.5		During high speed: 5.4/4.5 During low speed: 1.8/1.5	1.8/1.5			
		200 V	During high speed: 3.6/3.0 During low speed: 1.8/1.5		During high speed: 5.4/4.5 During low speed: 1.8/1.5	1.8/1.5			
	DC	24 V	During high speed: 4.0 During low speed: 2.0		During high speed: 6.0 During low speed: 2.0	2.0			
Temperature rise °C			30 (86°F)						
Thermal class			B (molded coil)						
Surge suppressor			Varistor						
Indicator			Lamp (option)						

Performance/Characteristics

Item		2 SKH3305	2 SKH4305	2 SKH5305	2 SKH3385	2 SKH4385	SKH318	SKH418
Flow characteristics	C[dm³/(s·bar)]	4.3	8.9	16.3	4.1	7.9	4.4	8.5
	b	0.18	0.19	0.27	0.14	0.17	0.13	0.17

Weight

Item	2 SKH3305	2 SKH4305	2 SKH5305	2 SKH3385	2 SKH4385	SKH318	SKH418
Weight g	1950	3250	4230	660	1030	500	810

How to order shock absorbing valves

● Variable speed unit

SKH - 3 20 —— 10 - 1

● Deceleration unit

SKH - 3 28 —— 10 - 1

● Single-side deceleration unit

SKH - 3 18 - A - 10 - 1

Ⓐ Nominal size (*1)
Ⓑ Solenoid position
Ⓒ Connection port with relief valve (*2)
Ⓓ Port size (*1)
Ⓔ Voltage

Code	Description	Model: Variable speed unit	Model: Deceleration unit	Model: One-sided deceleration unit
Ⓐ Nominal size				
3	4KB3 used	●	●	●
4	4KB4 used	●	●	●
5	4KB4 used	●		
Ⓑ Solenoid position				
18	2-position single			●
20	2-position double	●		
28	2-position double		●	
30	3-position all ports closed	●		
38	3-position all ports closed		●	
50	3-position PAB	●		
58	3-position PAB		●	
Ⓒ Connection port with relief valve				
Blank	Connection with port B			●
A	Connection with port A			●
Ⓓ Port size				
08	Rc1/4		●	●
10	Rc3/8	●	●	●
15	Rc1/2	●	●	●
Ⓔ Voltage				
1	100 VAC	●	●	●
2	200 VAC	●	●	●
3	24 VDC	●	●	●

*2: For the air circuit, refer to "Example of piping connections and time chart diagram" (page 1870).

*1: Nominal size and port size depending on each model

Code / Model	Ⓐ Nominal size	Ⓓ Port size	
Variable speed unit SKH-430 (32, 55)	**3**	**10**	Rc3/8
	4	**15**	Rc1/2
	5	**15**	Rc1/2
Deceleration unit SKH-3(2,4,5)38	**3**	**08**	Rc1/4
		10	Rc3/8
	4	**10**	Rc3/8
		15	Rc1/2
One-sided deceleration unit SKH-(3,4)18	**3**	**08**	Rc1/4
		10	Rc3/8
	4	**10**	Rc3/8
		15	Rc1/2

Copper and PTFE free specifications

● Copper- and PTFE-based materials are not used in the flow path.

** - Voltage - **P6**

Internal structure and parts list

SKH-320

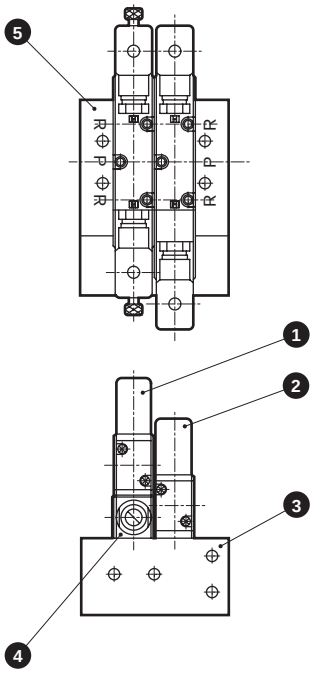

Main parts list

No.	Part name	Model No.	Qty.	Remarks
1	Solenoid valve	4KB329-00	1	For deceleration
2	Solenoid valve	4KB339-00	1	For high speed
3	Side plate	-	1	Aluminum alloy
4	Spacer relief valve	SKH-3-SR	1	Relief valve assy
5	Sub-plate	-	1	Aluminum alloy

SKH-420

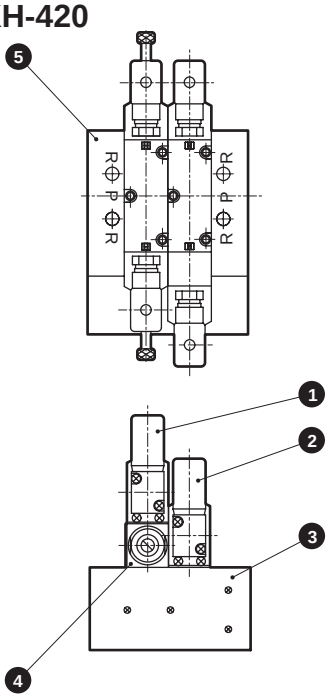

Main parts list

No.	Part name	Model No.	Qty.	Remarks
1	Solenoid valve	4KB429-00	1	For deceleration
2	Solenoid valve	4KB439-00	1	For high speed
3	Side plate	-	1	Aluminum alloy
4	Spacer relief valve	SKH-4-SR	1	Relief valve assy
5	Sub-plate	-	1	Aluminum alloy

SKH-520

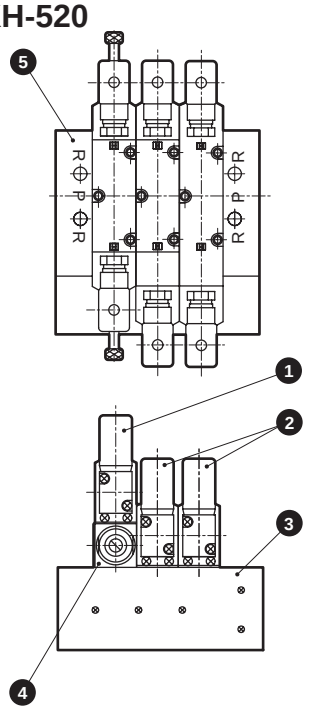

Main parts list

No.	Part name	Model No.	Qty.	Remarks
1	Solenoid valve	4KB429-00	1	For deceleration
2	Solenoid valve	4KB439-00	2	For high speed
3	Side plate	-	1	Aluminum alloy
4	Spacer relief valve	SKH-4-SR	1	Relief valve assy
5	Sub-plate	-	1	Aluminum alloy

SKH-328

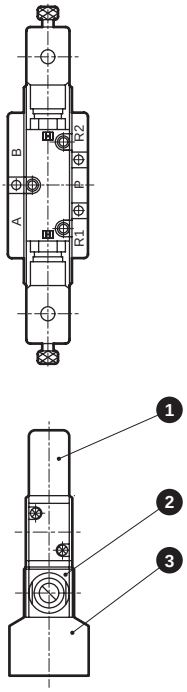

Main parts list

No.	Part name	Model No.	Qty.	Remarks
1	Solenoid valve	4KB329-00	1	For deceleration
2	Spacer relief valve	SKH-3-SR	1	Relief valve assy
3	Sub-plate	-	1	Alum die-cast

SKH-428

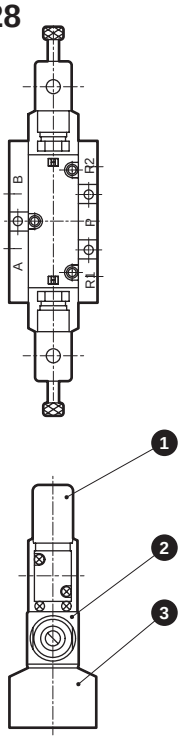

Main parts list

No.	Part name	Model No.	Qty.	Remarks
1	Solenoid valve	4KB429-00	1	For deceleration
2	Spacer relief valve	SKH-4-SR	1	Relief valve assy
3	Sub-plate	-	1	Alum die-cast

SKH-318

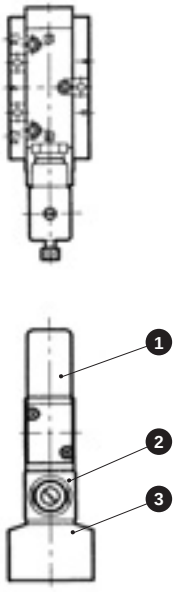

Main parts list

No.	Part name	Model No.	Qty.	Remarks
1	Solenoid valve	4KB319-00	1	For deceleration
2	Spacer relief valve *2	SKH-3S-SR SKH-3S-SR-A	1	Relief valve assembly
3	Sub-plate	-	1	Alum die-cast

SKH-418

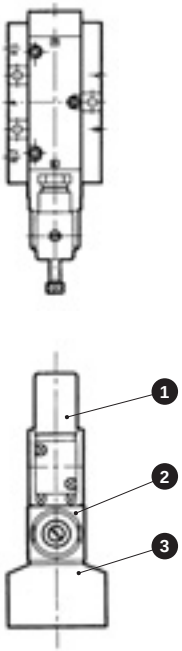

Main parts list

No.	Part name	Model No.	Qty.	Remarks
1	Solenoid valve	4KB419-00	1	For deceleration
2	Spacer relief valve *2	SKH-4S-SR SKH-4S-SR-A	1	Relief valve assembly
3	Sub-plate	-	1	Alum die-cast

*1) The appearance shown is that of the SKH-318 and SKH-418 types (types where the relief valve connects with port B).
*2) Of the spacer relief valves, those on the upper row are for SKH-318, SKH-418 (types where the relief valve connects with port B) while those on the lower row are for SKH-318-A, SKH-418-A (types where the relief valve connects with port A).

Internal structure and parts list

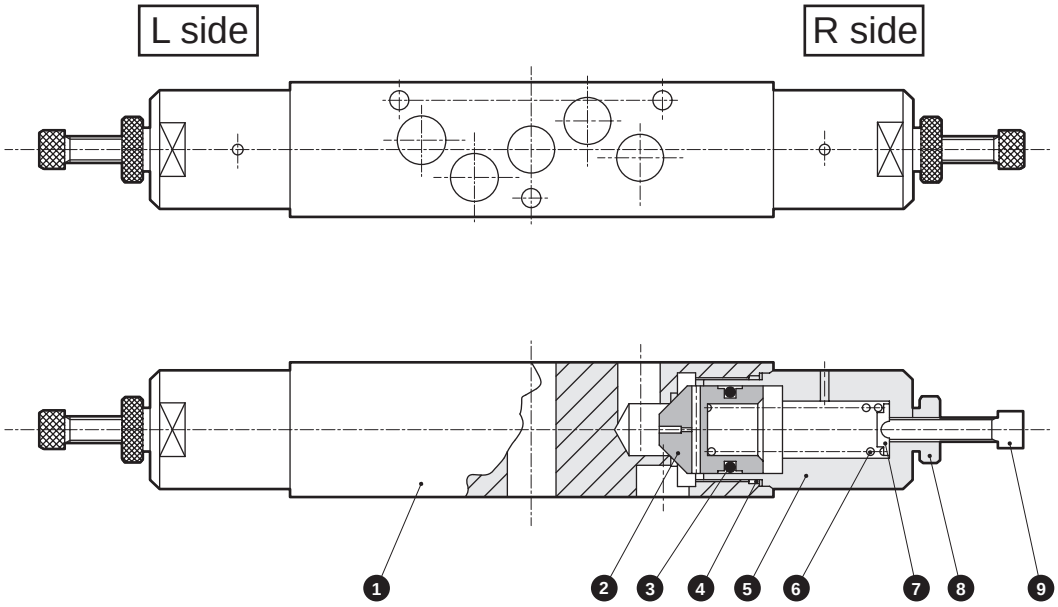

* The above part shows both-sided deceleration (**SKH-$\frac{3}{4}$-SR**).
* Of single-sided deceleration types, **SKH-$\frac{3}{4}$S-SR** will only have relief valves (❷ to ❾) on the left side as shown in the above diagram, while **SKH-$\frac{3}{4}$S-SR-A** will only have relief valves (❷ to ❾) on the right side.

Main parts list

No.	Part name	Material	Qty.
1	Spacer	Aluminum alloy	1
2	Valve retainer	Polyacetal resin	2
3	O-ring	Nitrile rubber	2
4	O-ring	Nitrile rubber	2
5	Cover	Aluminum alloy	2
6	Cylindrical spring	Piano wire	2
7	Spring disc	Steel	2
8	Stop nut	Stainless steel	2
9	Adjusting screw	Copper alloy	2
Accessory	Gasket	Nitrile rubber	1
	Hexagon socket head cap screw	Alloy steel	3

* The accessories are to be used when fixing the 4KB$\frac{3}{4}$ valve and spacer onto the sub-plate.

Repair parts list

Repair parts / Series model No.	Solenoid valve: Solenoid valve for high speed	Solenoid valve: Solenoid valve for deceleration	Relief valve	Relief valve: Spacer relief valve *2	Relief valve: Maintenance kit *1
SKH-3	4KB339-00-LS- AC200V / AC100V / DC24V	4KB3*9-00-LS- AC200V / AC100V / DC24V	For single-sided deceleration *3	SKH-3S-SR	SKH-3S-SRK
				SKH-3S-SR-A	
			For both-sided deceleration	SKH-3-SR	SKH-3-SRK
SKH-4	4KB439-00-LS- AC200V / AC100V / DC24V	4KB4*9-00-LS- AC200V / AC100V / DC24V	For single-sided deceleration *3	SKH-4S-SR	SKH-4S-SRK
				SKH-4S-SR-A	
SKH-5			For both-sided deceleration	SKH-4-SR	SKH-4-SRK

*1) The maintenance kit is ❷ + ❸ + ❹ + ❺ + ❻ + ❼.
*2) The spacer relief valve is an accessory of + ❶ + ❷ + ❸ + ❹ + ❺ + ❻ + ❼ + ❽ + ❾.
*3) Of the spacer relief valves for single-sided deceleration, those on the upper row are for SKH-$\frac{3}{4}$18 (type that connects with port B) while those on the lower row are for SKH-$\frac{3}{4}$18-A (type that connects with port A).

Dimensions CAD

SKH-320

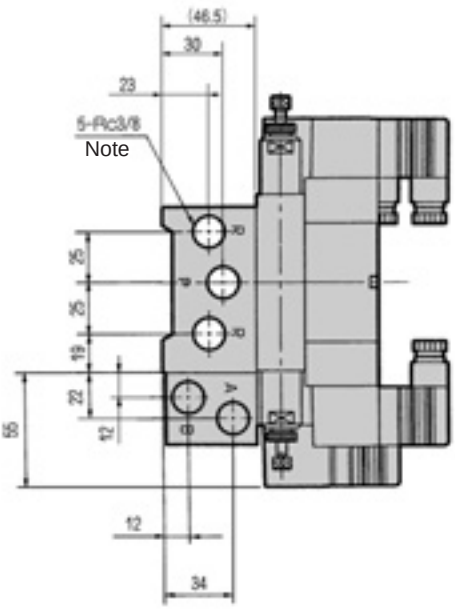

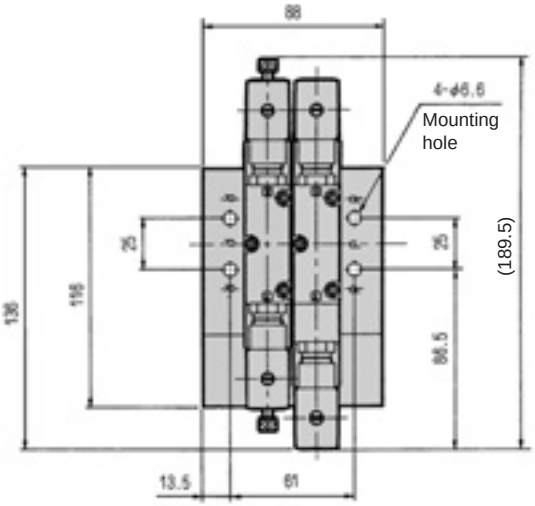

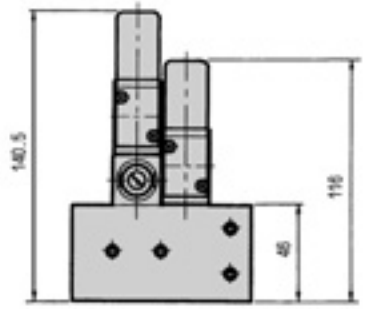

Note) P and R ports have port holes on the opposite side as well, whereas A and B ports only have port holes on this side.

SKH-3$^{3}_{5}$0

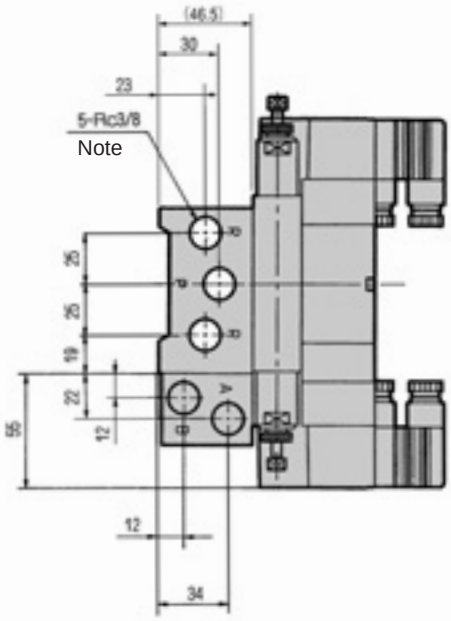

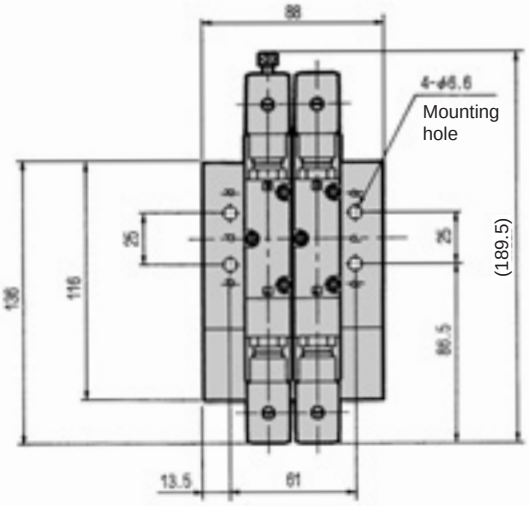

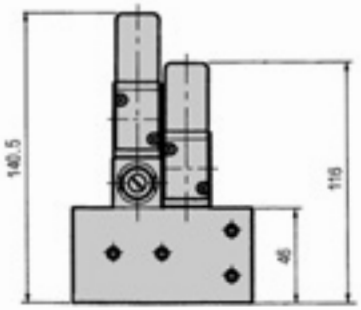

Note) P and R ports have port holes on the opposite side as well, whereas A and B ports only have port holes on this side.

Dimensions CAD

SKH-420

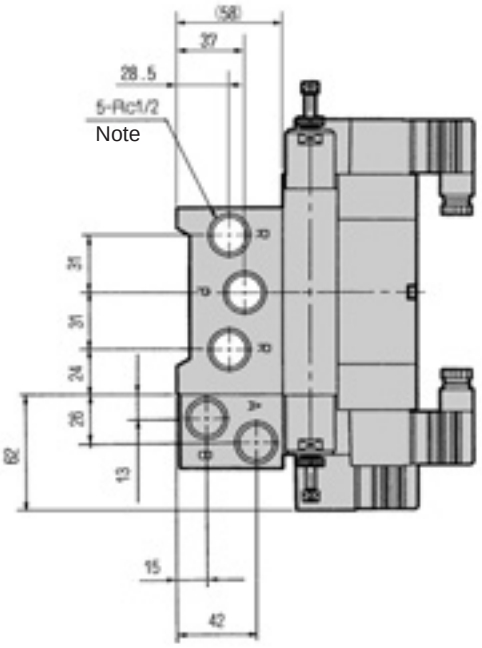

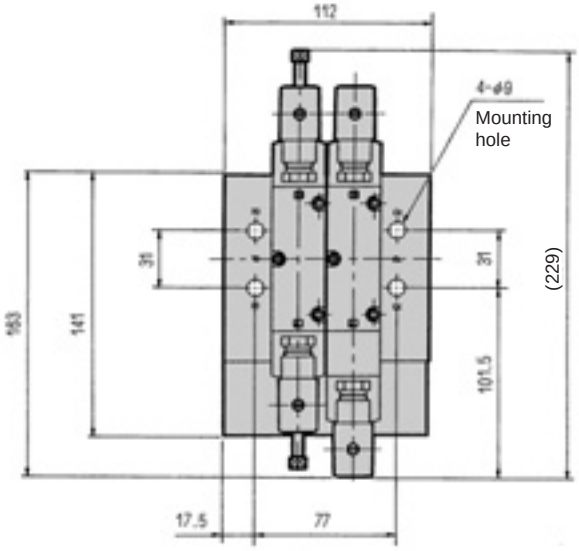

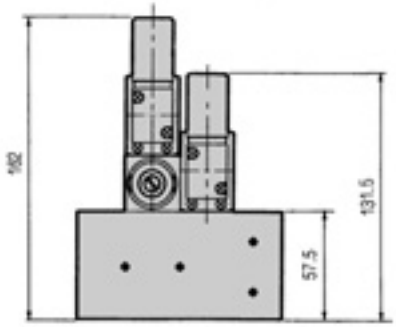

Note) P and R ports have port holes on the opposite side as well, whereas A and B ports only have port holes on this side.

SKH-4$^{3}_{5}$0

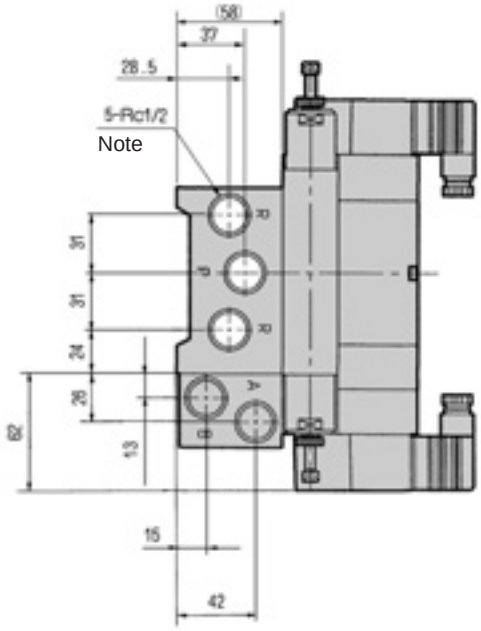

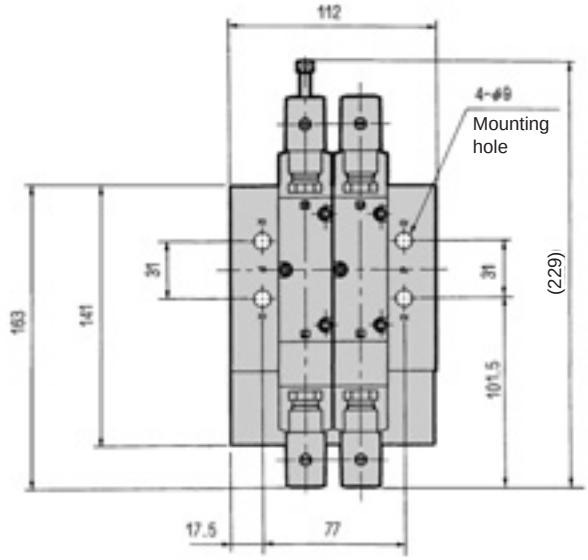

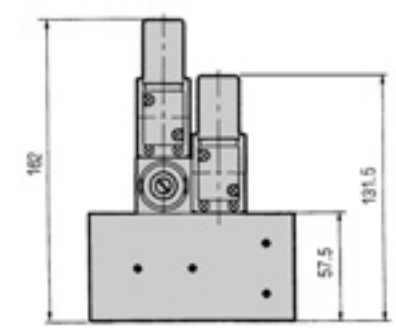

Note) P and R ports have port holes on the opposite side as well, whereas A and B ports only have port holes on this side.

Dimensions CAD

SKH-520

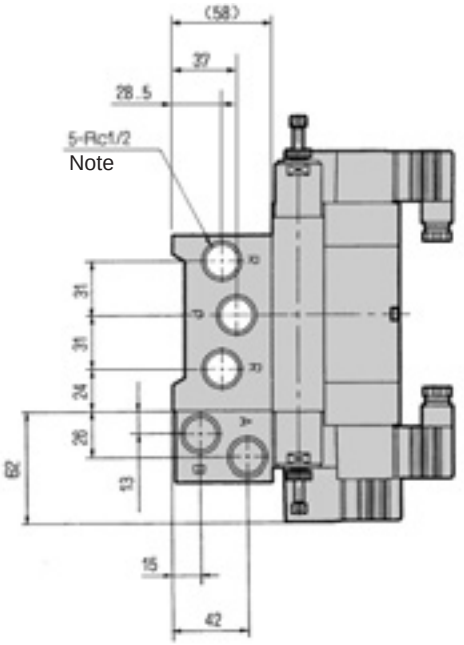

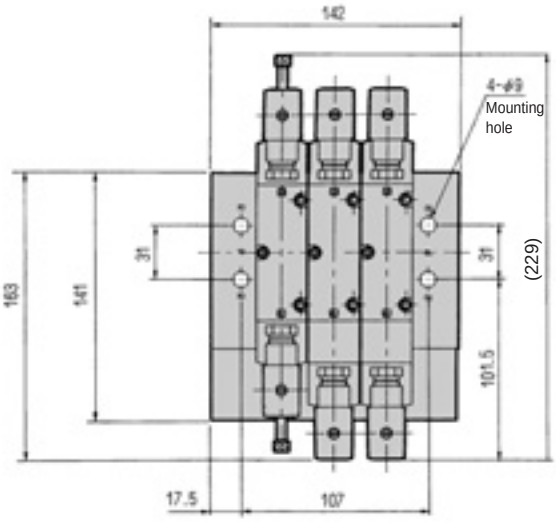

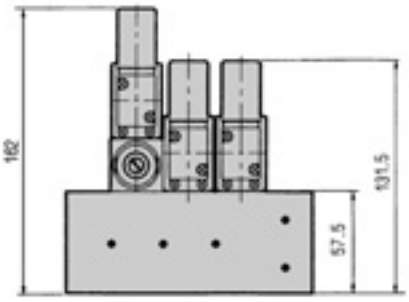

Note) P and R ports have port holes on the opposite side as well, whereas A and B ports only have port holes on this side.

SKH-5$^{3}_{5}$0

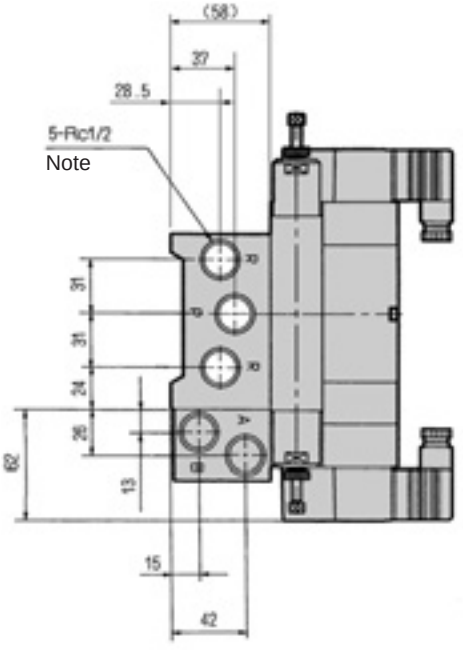

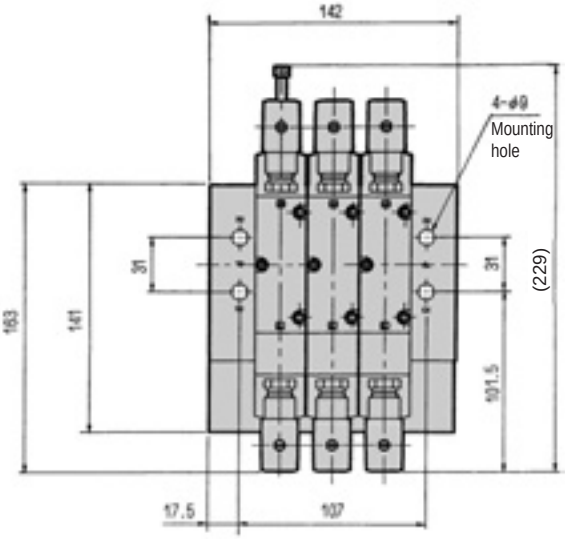

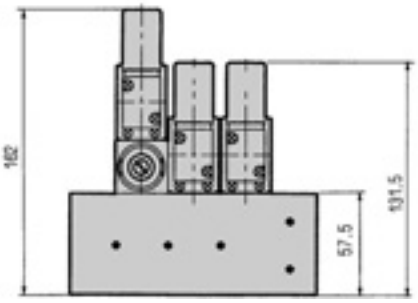

Note) P and R ports have port holes on the opposite side as well, whereas A and B ports only have port holes on this side.

Dimensions

SKH-328

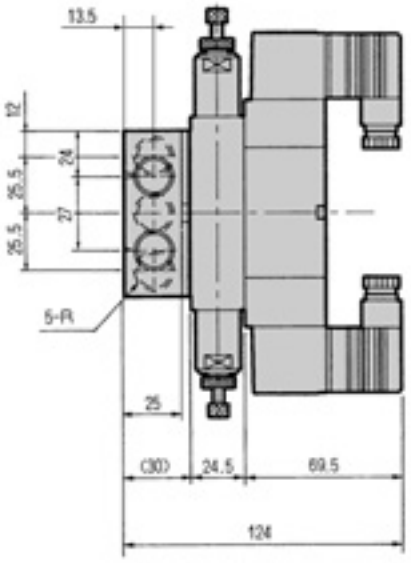

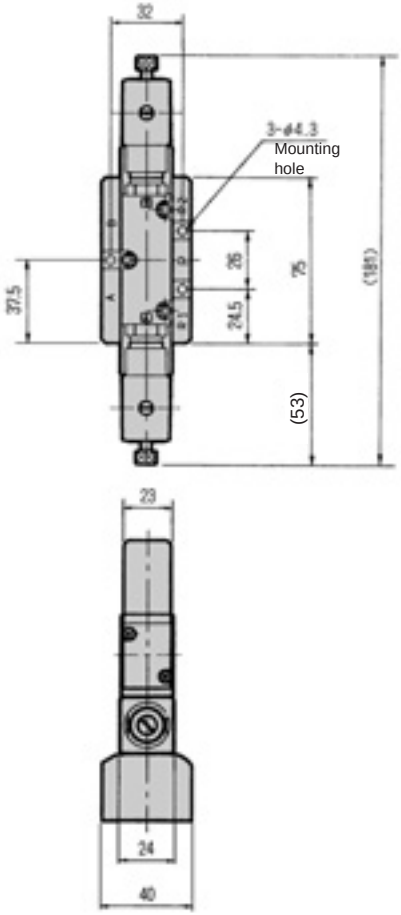

Model No.	R
SKH-328-08	Rc1/4
SKH-328-10	Rc3/8

SKH-3$^{3}_{5}$8

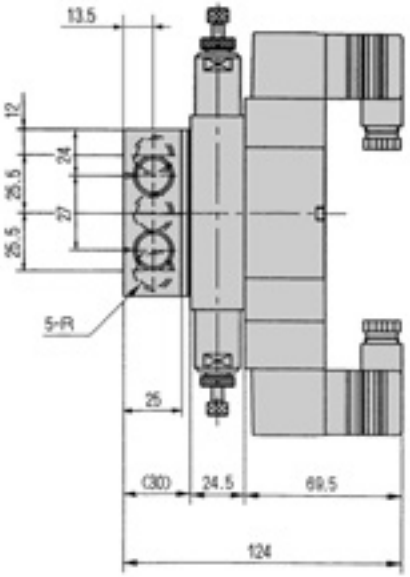

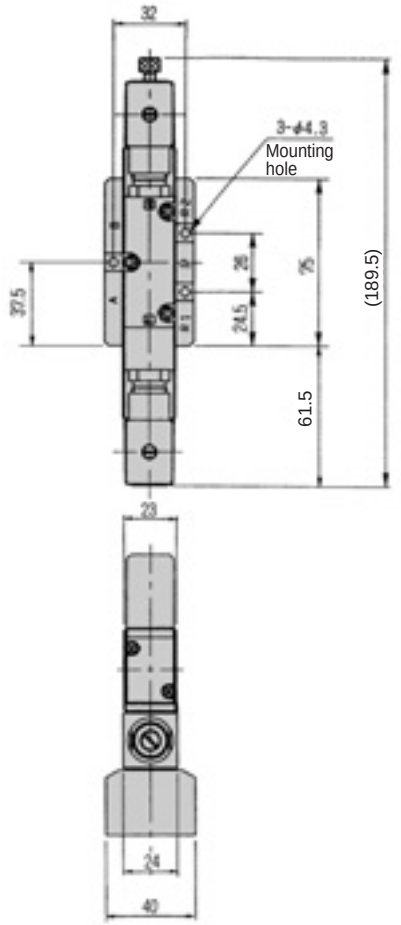

Model No.	R
SKH-3$^{3}_{5}$8-08	Rc1/4
SKH-3$^{3}_{5}$8-10	Rc3/8

Dimensions CAD

SKH-428

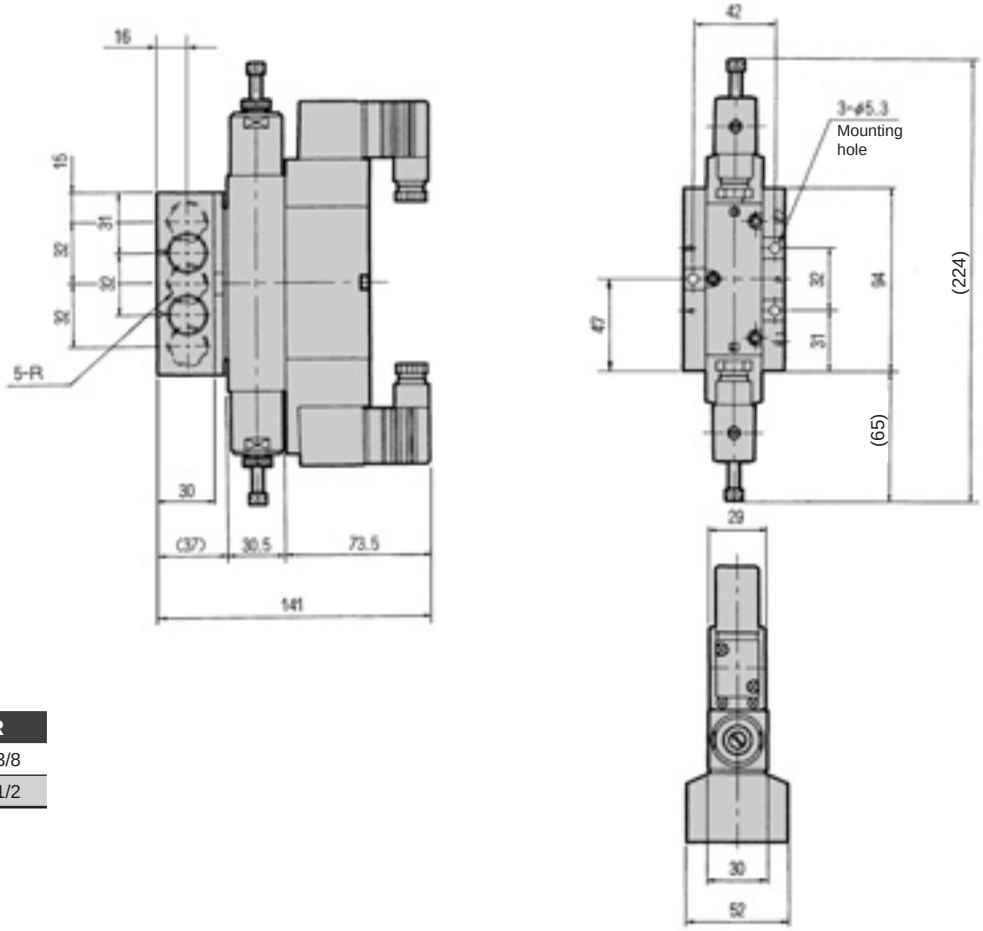

Model No.	R
SKH-428-10	Rc3/8
SKH-428-15	Rc1/2

SKH-4$\frac{3}{5}$8

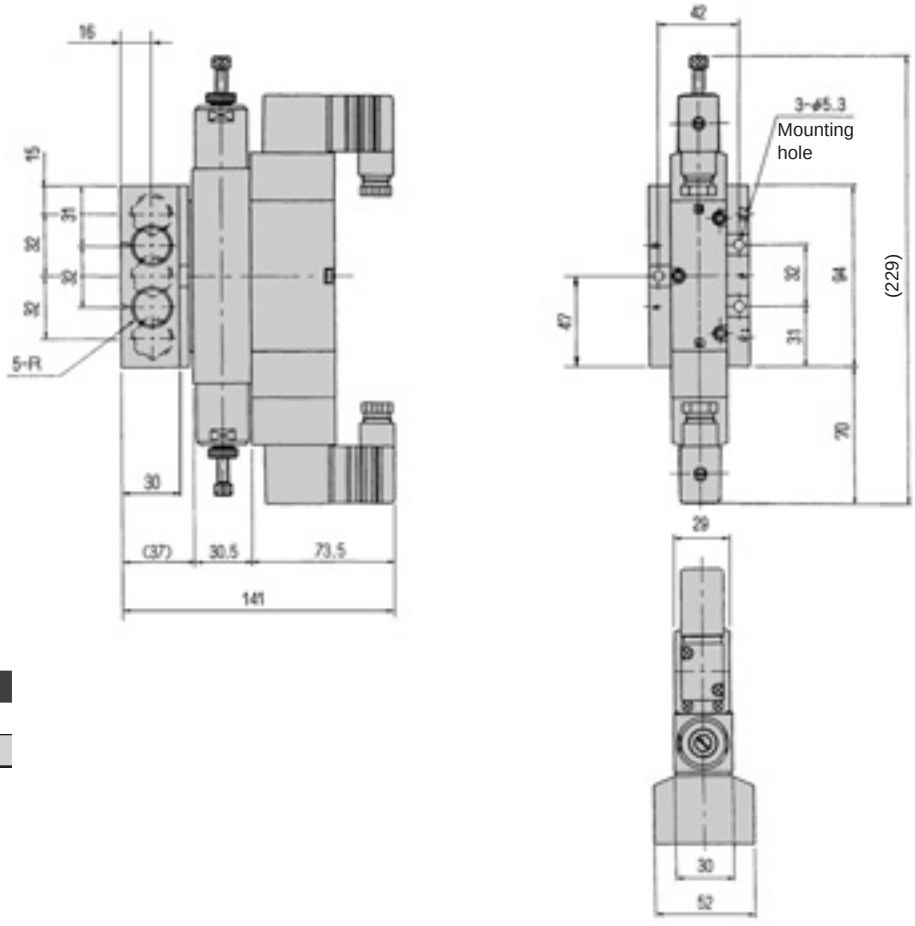

Model No.	R
SKH-4$\frac{3}{5}$8-10	Rc3/8
SKH-4$\frac{3}{5}$8-15	Rc1/2

Dimensions

SKH-318

(Type where the relief valve connects with port B)

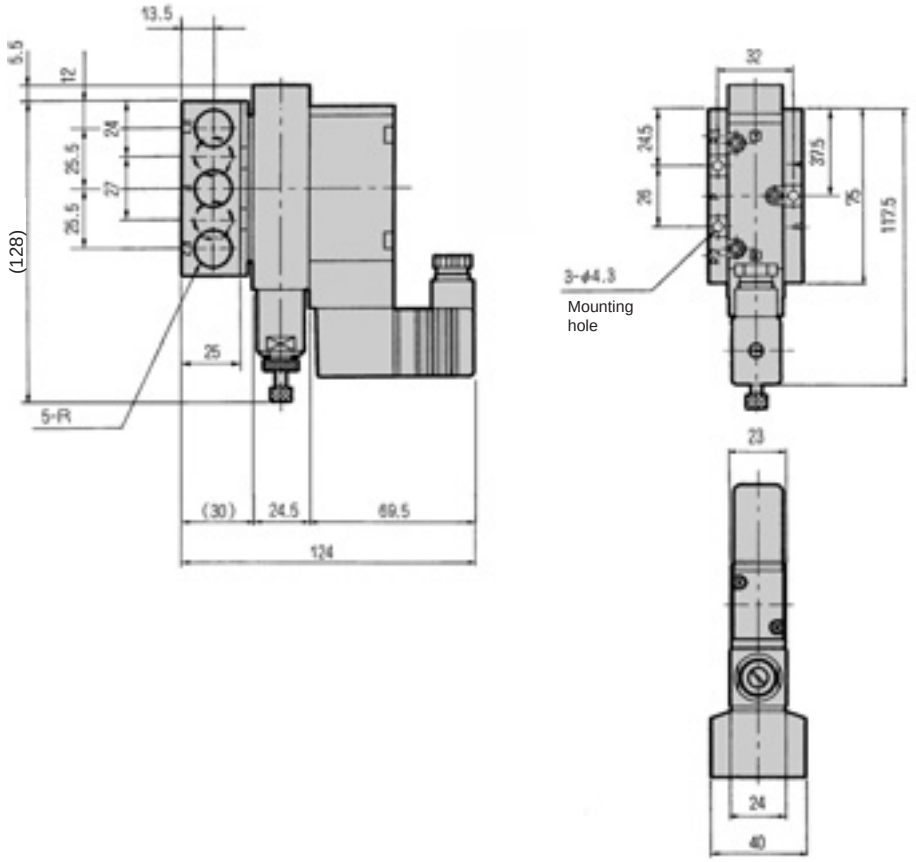

Model No.	R
SKH-318-08	Rc1/4
SKH-318-10	Rc3/8

SKH-418

(Type where the relief valve connects with port B)

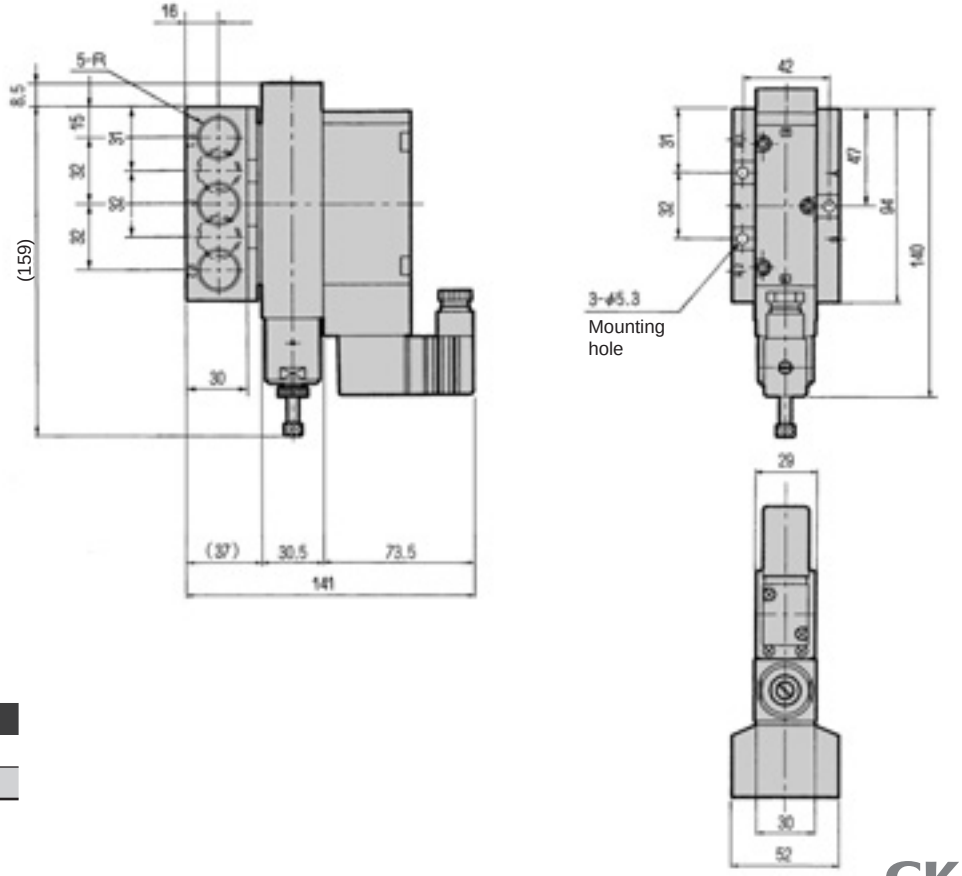

Model No.	R
SKH-418-10	Rc3/8
SKH-418-15	Rc1/2

Dimensions CAD

SKH-318-A

(Type where the relief valve connects with port A)

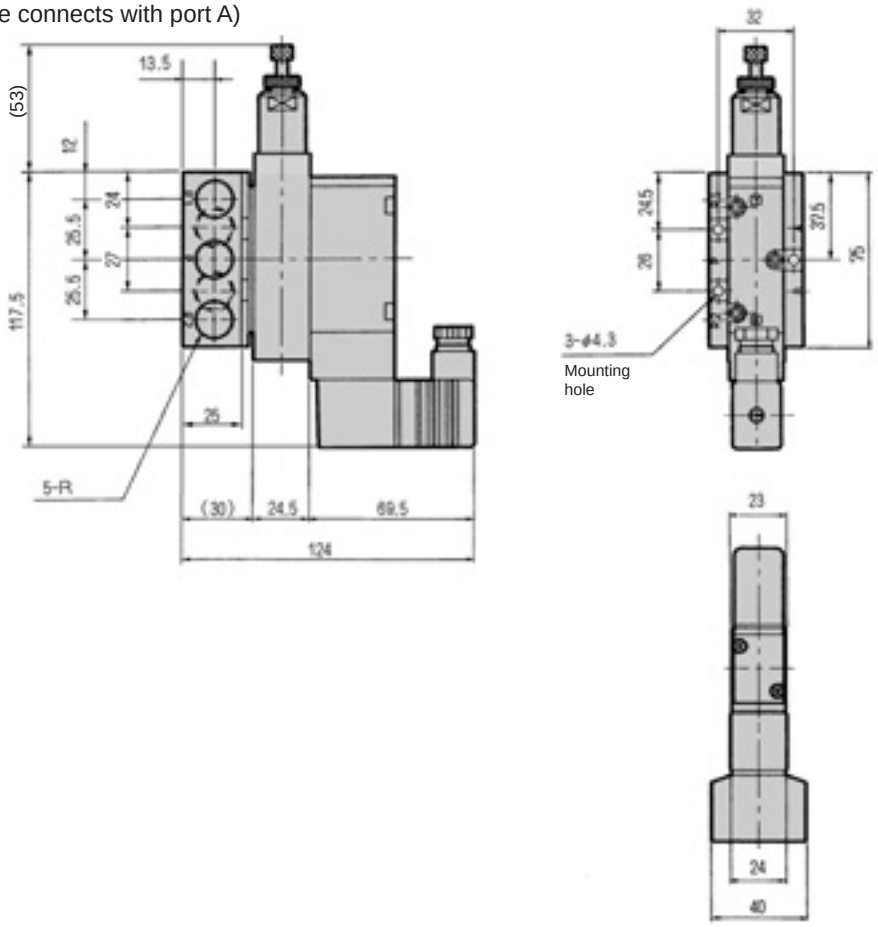

Model No.	R
SKH-318-08	Rc1/4
SKH-318-10	Rc3/8

SKH-418-A

(Type where the relief valve connects with port A)

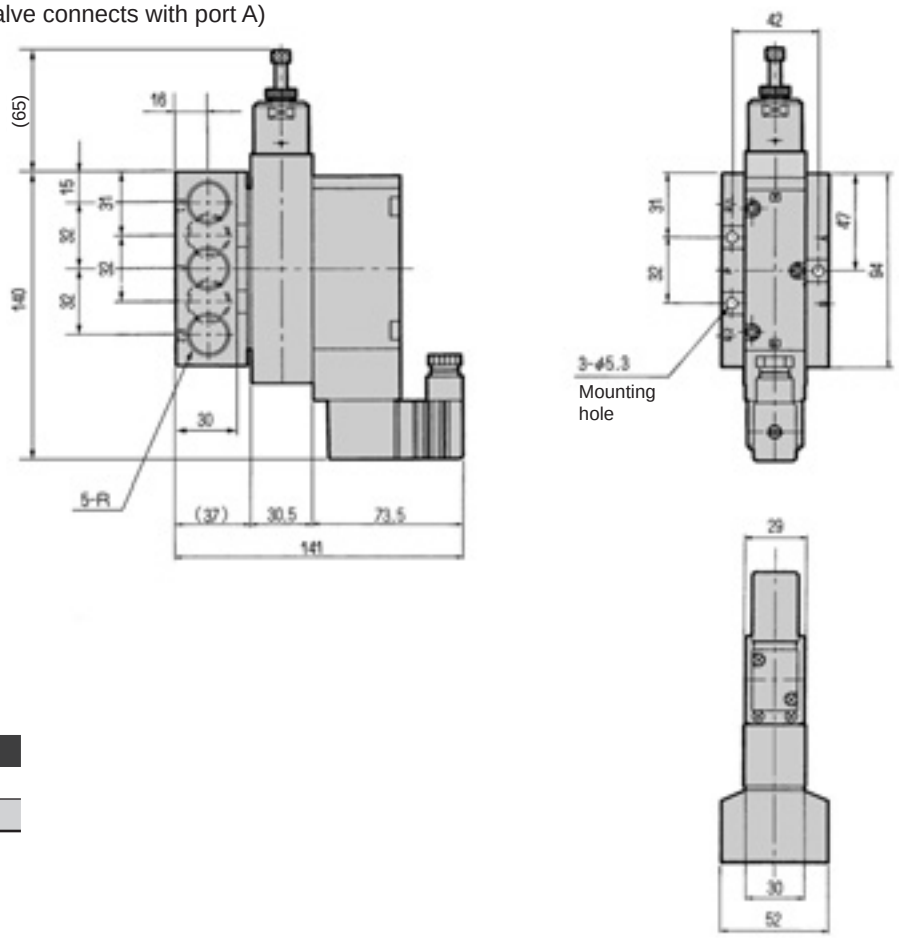

Model No.	R
SKH-418-10	Rc3/8
SKH-418-15	Rc1/2

[SKH-320/420]

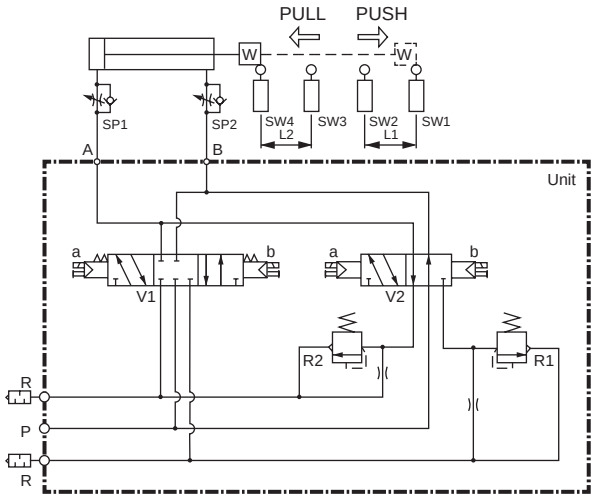

[SKH-520]

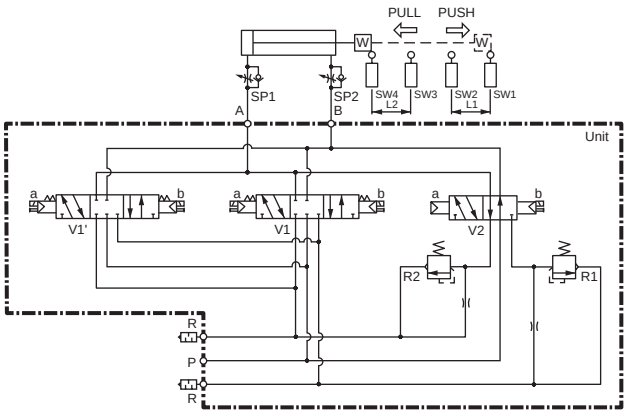

[SKH-330/430]

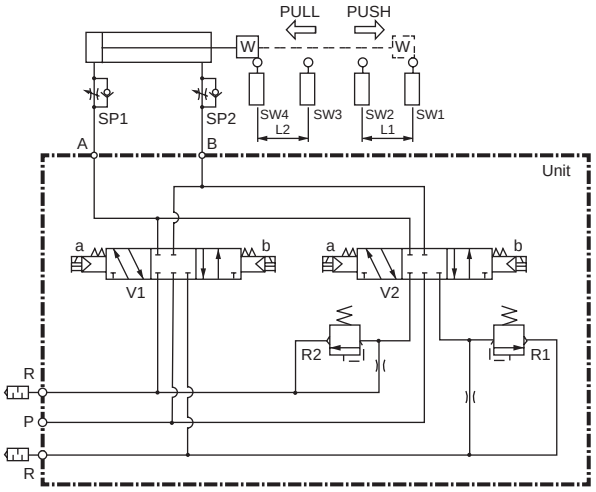

[SKH-530]

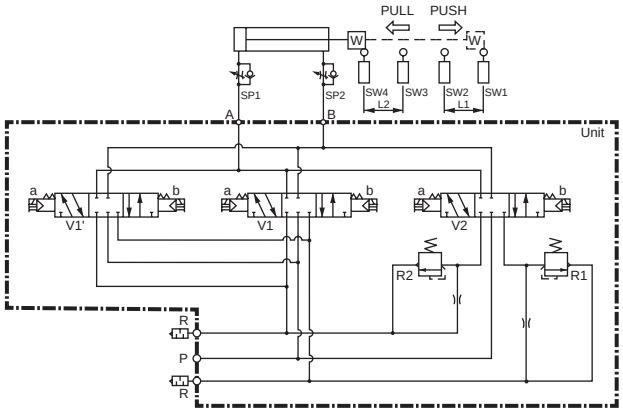

[SKH-350/450]

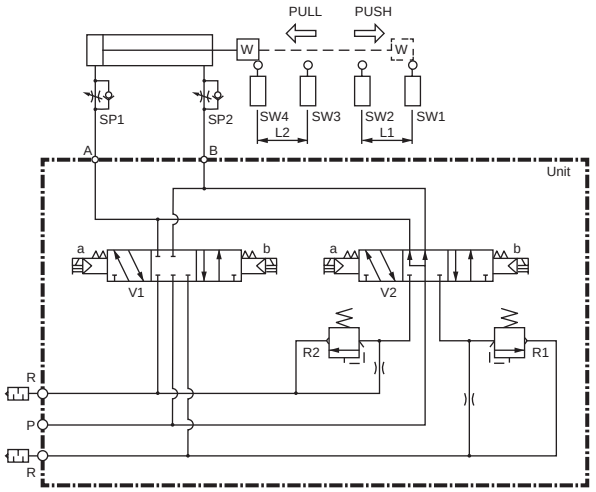

[SKH-550]

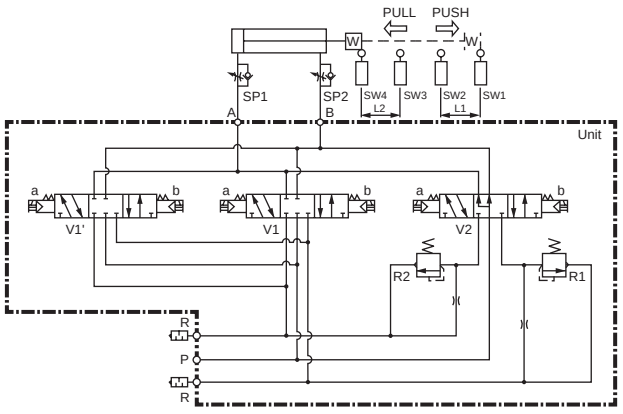

Example of piping connections and time chart diagram

· Configure the control sequence as a circuit in accordance with the time chart diagram shown below.

	Piping connection example	Time chart
For SKH-$\frac{3}{4}$20	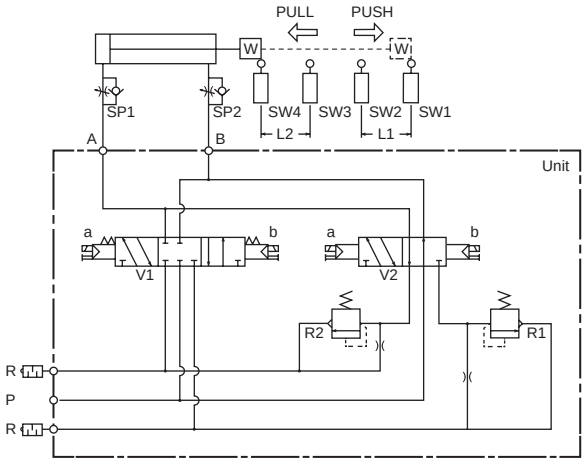	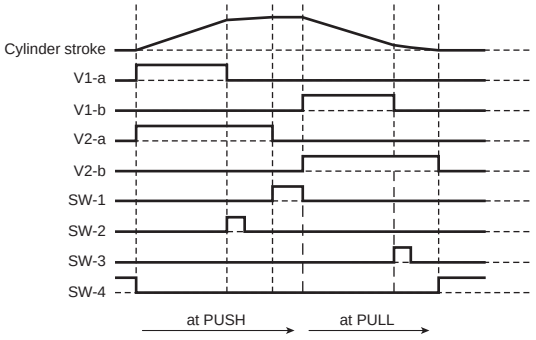
For SKH-$\frac{3}{4}$28	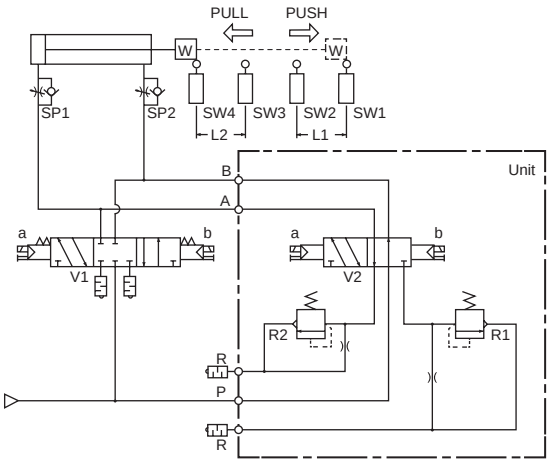	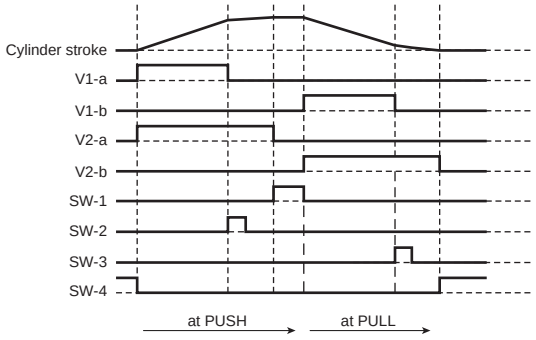

Example of piping connections and time chart diagram

· Configure the control sequence as a circuit in accordance with the time chart diagram shown below.

	Piping connection example	Time chart
For SKH-$^{3}_{4}$18	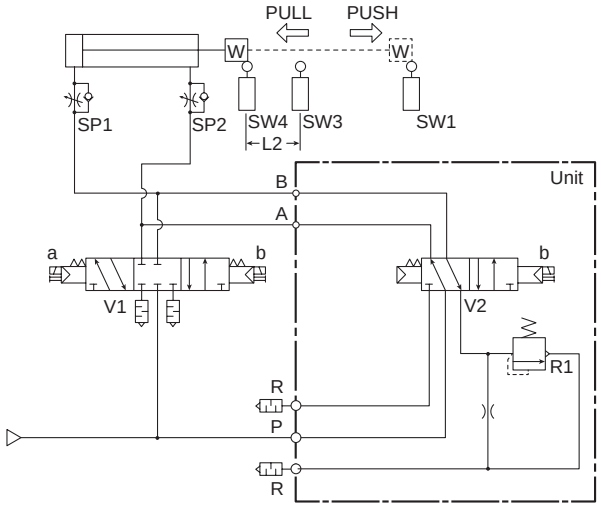	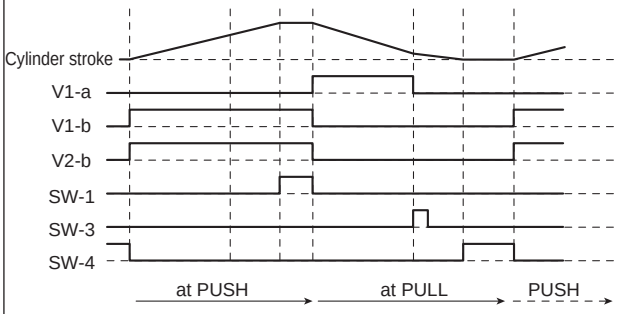

Note) · This is a type where the relief valve is connected to port B.
· With this circuit, the relief valve can be used during Pull.

	Piping connection example	Time chart
For SKH-$^{3}_{4}$18-A	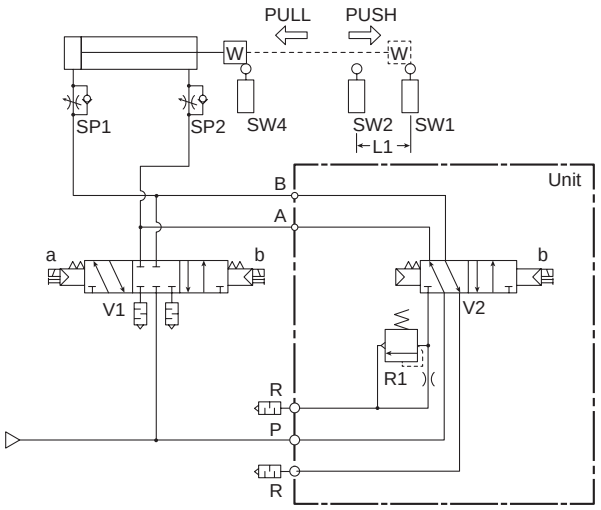	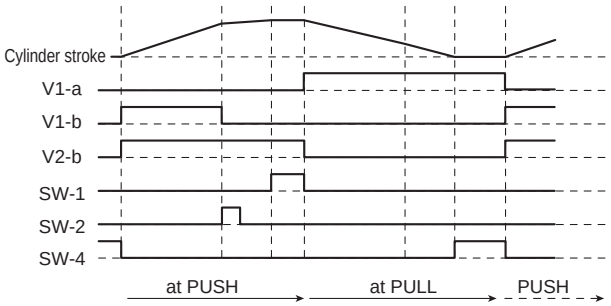

Note) · This is a type where the relief valve is connected to port A.
· With this circuit, the relief valve can be used during PUSH.

Q&A

SKH shock absorbing valve FAQ

Q1

What kind of applications are SKH shock absorbing valves effective in?

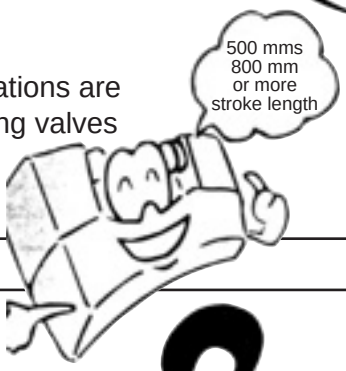

A1

They are effective in applications where the cylinder movement speed is 500 mm/s or above, the stroke length thereof is 800 mm or more, and it is desirable to decelerate the cylinder towards the extremities in order to eliminate shock at the end.

Q2

Can the SKH shock absorbing valves only be used with cylinders installed in the direction of the X-axis (horizontal direction) ?

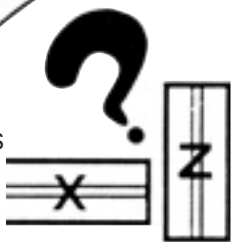

A2

No, they can also be used with cylinders installed in the Z-axis direction (vertical direction). (Balance the top and bottom by attaching a reverse regulator, etc.)

Q3

Can SKH shock absorbing valves be used together with a cylinder with brake?

A3

Yes, they can be used together. By installing an SKH shock absorbing valve, it will be possible to reduce the deviation of the brake stopping accuracy.

Q4

Are there cases in which an SKH shock absorbing valve cannot be used?



A4

Yes, there are. As they operate with pressure control using relief valves, the units cannot be used in the following conditions where the exhaust pressure will not rise.

(1) When the cylinder movement speed is less than 500 mm/s.
(2) When the cylinder stroke length is 800 mm or less and the decelerating distance is less than 350 mm.
(3) When the cylinder bore size is less than ø25.
(4) When the air pressure is not within 0.3 MPa to 0.7 MPa.

Q5
When using an SKH shock absorbing valve, will it be necessary to install a valve switching timing sensor for the cylinder?

A5
While the switching timing of the valve is necessary, instead of using an external sensor, it is also possible to switch the timing by using a software timer, etc., within the control sequence circuit. (When using a cylinder sensor, use an off-delay for the cylinder switch.)

Q6
Where should the SKH shock absorbing valves be installed?

A6
For shock absorbing effect, they should be installed in locations where the distance between the cylinder port and the shock absorbing valve is the shortest possible.

Q7
Can the SKH shock absorbing valves be used in poor working environments such as environments where the valves will be exposed to water, cutting chips, or dust?

A7
In general, it will be necessary to use a protective cover, etc. Contact CKD as a master type is also available apart from the solenoid valve.



Q8
Will an absorber on the end be unnecessary if an SKH shock absorbing valve is used?

A8
The absorber will not be necessary as long as a distance that enables sufficient deceleration can be ensured with the cylinder stroke. The absorber may be kept on.

Q9
Isn't it difficult to adjust SKH shock absorbing valves?

A9
Perform adjustments by following the adjustment procedures listed in the instruction manual.



Q10
Is it easy to perform maintenance and inspection of SKH shock absorbing valves?



A10
Referring to the relief valve structural diagram, you will find that the structure is simple and that disassembly and inspection are easy. In addition, a relief valve kit for maintenance is also available.

Safety Precautions

Be sure to read this section before use.
Refer to Intro Page 59 for general precautions for using valves.

Product-specific cautions: Shock absorbing valve SKH Series

Mounting, installation and adjustment

⚠CAUTION

■ Installation positions and types of deceleration command switches

Install the switches at least 350 mm away from the edge of the cylinder end. If the switch is placed any closer, the cylinder exhaust pressure will not rise and the cylinder will hit the end with excessive impact force, which may damage the cylinder or equipment.
When a cylinder switch is used for this command switch, as there may be cases when input detection cannot be performed with the programmable controller, use a cylinder switch, etc., of the off-delay and use the switch so that the switch signal is output for a long time (for a duration which enables detection by the programmable controller).

■ Settings of the relief valve

Do not lower the set pressure of the relief valve prior to adjustment. The exhaust pressure will not rise and the cylinder will hit the end with excessive impact force, which may damage the cylinder or equipment.

■ Installation of regulator

In order to realize the cushioning effect, as the unit operates on pressure control which uses exhaust pressure, configure an air circuit with a regulator installed for stable pressure so that the supplied pressure does not fluctuate.

■ Fixing the relief valve knob

After setting the adjustment for the relief valve, be sure to lock the relief valve knob. Forgetting to lock the knob will cause the knob to loosen and change the set pressure, which may lead to damage of the cylinder or equipment.

Use/maintenance

⚠CAUTION

■ Intermediate stop

Do not stop the cylinder at an intermediate point for long periods with SKH330, 430, 530, 338, and 438. There is a risk of a "popping out" phenomenon occurring when restarting the unit.

■ Handling during the energized state

Do not remove the DIN terminal while the solenoid valve is energized. Doing so may create a short circuit or cause electrocution.

Silencer

■ Pneumatic auxiliary components



CONTENTS

Series variation	1876
● Metering valve with silencer (SMW2)	1878
● Metering valve with silencer (FMS, SMW)	1880
● Small bore size/resin body (SL/SLW)	1882
● High noise reduction/small bore size/resin body (SLW-*A-H)	1884
● Large flow rate/small bore size/resin body (SLW-*L)	1885
● High noise reduction/compact (SLW-6S/8S)	1886
● High noise reduction/compact (SLW-20S)	1887
● Push-in (SLW-H*)	1888
● Miniature (SLM)	1889
● Metal body (SL)	1890
● Outdoor Series Metal body (SL-W)	1892
⚠ Safety precautions	1894
● Exhaust cleaner (FA)	1896

Series variation

Silencer

● High noise reduction effect and 2 types of materials.

Model/outline	Model No.	Port size (R)															Effective cross-sectional area (mm^2)	Flow rate (ℓ/min) ANR 0.5 MPa	Cylinder bore size (mm)	Page
		M3	M5	1/8	1/4	3/8	1/2	3/4	1	1 1/4	1 1/2	2	ø6	ø8	ø10	ø12				
● Metering valve with silencer 	SMW2-6A			●													5.6	370	ø20 to ø50	1878
	SMW2-8A				●												9.9	660	ø32 to ø75	
	FMS-M5		●														4	250	ø6 to ø15	1880
	SMW-10A					●											25	1700	ø50 to ø100	
	SMW-15A						●										39	2600	ø50 to ø100	
● Small bore size 	SL-M5		●														5	300	ø6 to ø15	1882
● Resin body 	SLW-6A/6N			●													10	650	ø20 to ø80	
	SLW-8A/8N				●												20	1300	ø32 to ø80	
	SLW-10A/10N					●											30	2000	ø50 to ø100	
	SLW-15A/15N						●										75	4850	ø50 to ø100	
● High noise reduction/ small bore size/ resin body 	SLW-8A-H				●												15	1000	ø32 to ø80	1884
	SLW-10A-H					●											30	2000	ø50 to ø100	
	SLW-15A-H						●										50	3250	ø50 to ø100	
● Large flow rate/ small bore size/ resin body 	SLW-8L				●												30	2000 or more	ø32 to ø80	1885
	SLW-10L					●											60	4000 or more	ø50 to ø100	
● High noise reduction/ compact 	SLW-6S			●													12	800	ø20 to ø80	1886
	SLW-8S				●												30	1900	ø32 to ø80	
	SLW-20S							●									90	6000	ø100 to ø200	1887

Model/outline	Model No.	Port size (Rc or R)															Effective cross-sectional area (mm^2)	Flow rate (ℓ/min) ANR 0.5 MPa	Cylinder bore size (mm)	Page
		M3	M5	1/8	1/4	3/8	1/2	3/4	1	1 1/4	1 1/2	2	ø6	ø8	ø10	ø12				
● Push-in 	SLW-H6												●				7	455	ø20 to ø40	1888
	SLW-H8													●			8.5	550		
	SLW-H10														●		17.5	1135		
	SLW-H12															●	25.5	1655		
● Miniature 	SLM-M3	●															1	60 or more	ø6 or less	1889
	SLM-M5		●														5	350 or more	ø6 to ø15	
● Aluminum body 	SL-8A				●												36	2400	ø50 to ø100	1890
	SL-10A					●											48	3200	ø63 to ø140	
	SL-15A						●										61	4100	ø75 to ø180	
	SL-20A							●									160	12000	ø100 to ø250	
	SL-25A								●								210	14000	ø140 to ø250	
	SL-32A									●							280	18000	ø140 to ø450	
	SL-40A										●						320	21000	ø140 to ø450	
	SL-50A											●					500	33000	ø300 to ø450	
● Outdoor Series Metal body 	SL-8A-W				●												36	2.4	ø50 to ø100	1892
	SL-10A-W					●											48	3.2	ø63 to ø140	
	SL-15A-W						●										61	4.1	ø75 to ø180	

Model/outline	Model No.	Port size (Rc)															Effective cross-sectional area (mm^2)	Max. processing flow rate m^3/min(ANR)	Page
		M3	M5	1/8	1/4	3/8	1/2	3/4	1	1 1/4	1 1/2	2	ø6	ø8	ø10	ø12			
● Exhaust cleaner 	FA331					●											16	0.3	1896
	FA431						●										33	0.6	
	FA531							●									55	1	
	FA631								●								165	3	
	FA731										●						330	6	
	FA831											●					550	10	



Metering valve with silencer

SMW2 Series

● Port size: R1/8 to R1/4

JIS symbol 

RoHS CAD

Features

● Compact/lightweight/high flow rate
Volume reduced by 50%, and weight reduced by 80% compared with conventional series, while max. effective cross-sectional area in the class is achieved.

● Noise reduction effect 23 dB (A) and over
P.P. sintering element with high damping effect integrated into the body to maintain low noise level.

● Uses a push lock needle
Knob with push lock mechanism enables easy and secure locking.

● Environmental friendly design
By using plastic material only, sorting at disposing is eliminated.

Specifications

Item	SMW2-6A	SMW2-8A
Working fluid	Compressed air	
Max. working pressure MPa	0.7 (≈100 psi, 7 bar)	
Min. working pressure MPa	0 (≈0 psi, 0 bar)	
Proof pressure MPa	1.05 (≈150 psi, 10.5 bar)	
Fluid temperature °C	5 (41°F) to 60 (140°F)	
Ambient temperature °C	-10 (14°F) to 60 (140°F) (no freezing)	
Ambient humidity %RH	85 or less	
Port size R	1/8	1/4
Weight g	4.5	5
Cylinder bore size mm	ø20 to ø50	ø32 to ø75
Needle rotation speed	9	
Noise reduction effect (*2) dB [A]	23 or more	28 or more
Flow rate (*1) ℓ/min(ANR)	370	660
Effective cross-sectional area mm^2	5.6	9.9

*1: Flow rate is the atmospheric pressure conversion at 0.5 MPa.
*2: Noise reduction effect at maximum flow rate is shown.

How to order

SMW2 - 6A

Code	Description
Ⓐ **Port size**	
6A	R1/8
8A	R1/4

Flow characteristics

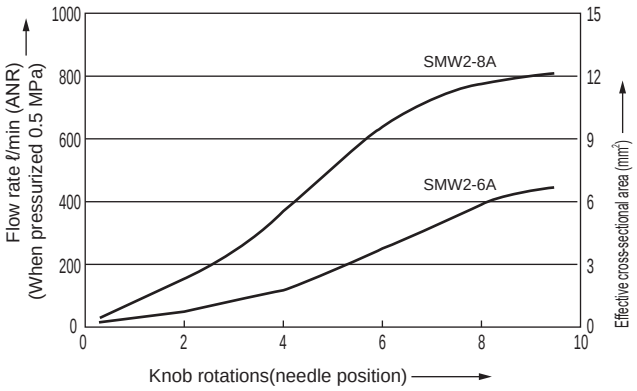

Internal structure and parts list

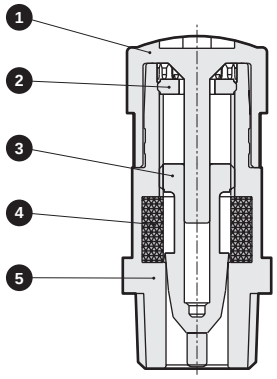

No.	Part name	Material
1	Knob	Polybutylene terephthalate
2	Guide ring	Polyamide
3	Needle	Polyamide
4	Element	PP sintered resin
5	Body	Polyamide

Dimensions CAD

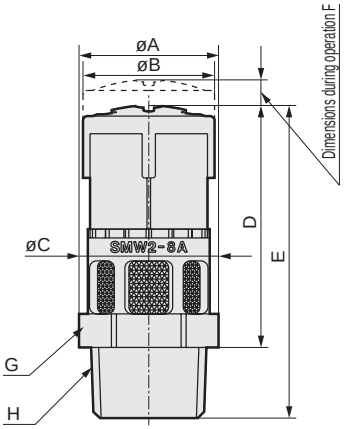

Code / Model No.	A	B	C	D	E	F	G Hexagon	H Port size
SMW2-6A	13.5	14.9	13.8	27.4	35.4	2.9	12	R1/8
SMW2-8A	15.8						14	R1/4

Usage methods

- The needle lock is released when the knob is pulled, and is locked when pressed.
- Pull the knob and release the lock before adjusting the flow rate.
  The knob opens when turned to the right and closes when turned to the left.
- Return the knob to the closed state, and gradually open it to adjust speed.
- After adjusting speed, press the knob and confirm that the needle is locked.

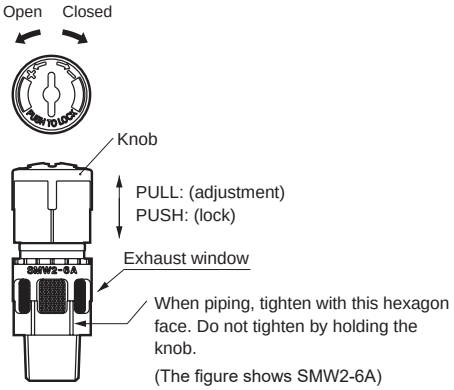

⚠ Safety precautions

■ Design/selection

- This valve cannot be used as a stop valve that requires no leakage.
  Slight leakage is allowed for in this product's specifications.

- Depending on air quality (dew point), the exhaust port could freeze due to adiabatic expansion.

■ Mounting, installation and adjustment

- The needle is designed to open and close by turning lightly by hand.
  Turning the needle too far when fully opened or closed could damage internal parts.

- Return the knob to the closed state, and gradually open it to adjust speed. If the needle is opened, the actuator could suddenly and dangerously pop out.

- The tightening torque for the port thread is shown in Table 1.
  Because screws loosen easily under high temperatures, mount with the upper torque limit (1.0 N·m) when the ambient temperature is 40˚C or more.

Model No.	Tightening torque (N·m)
SMW2-6A	0.5 to 1.0
SMW2-8A	0.5 to 1.0

Table 1 Recommended tightening torque

- When piping, use a tool and tighten with the hexagon face below the exhaust window.
  Do not tighten or remove pipes with the knob.
  Internal damage could result.

- Sealant is not applied on thread part. If used in this state, screws do not loosen, but some leakage could result. When using in low speed range, wrap sealing tape around the joint.

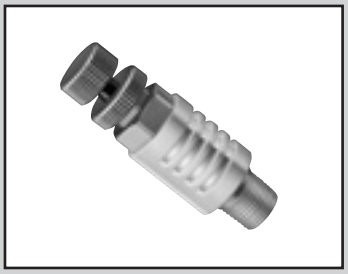

Metering valve with silencer

FMS/SMW Series

● Port size: M5 / R3/8 / R1/2

JIS symbol

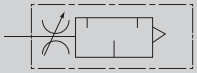

RoHS CAD

Specifications

Item	FMS-M5	SMW-10A	SMW-15A
Working fluid	Compressed air		
Max. working pressure MPa	0.7 (≈100 psi, 7 bar)		
Min. working pressure MPa	0 (≈0 psi, 0 bar)		
Proof pressure MPa	1.05 (≈150 psi, 10.5 bar)		
Fluid temperature °C	5 (41°F) to 60 (140°F) (no freezing. *3)		
Ambient temperature °C	-10 (14°F) to 60 (140°F) (no freezing)		
Port size R	M5	3/8	1/2
Weight g	6	125	170
Cylinder bore size mm	ø6 to ø15	ø50 to ø100	ø50 to ø100
Needle rotation speed	10	19	19
Noise reduction effect (*2) dB	20 or more		
Flow rate (*1) ℓ/min (ANR)	250	1700	2600
Effective cross-sectional area mm^2	4	25	39

*1: Flow rate is the atmospheric pressure conversion at 0.5 MPa.
*2: Noise reduction effect at maximum flow rate is shown.
*3: Freezing may occur due to adiabatic expansion depending on the air quality (dew point).

How to order

FMS – M5

Ⓐ Port size

Code	Description
Ⓐ Port size	
M5	M5x0.8

Note: Sales unit is 2 pcs./bag.

SMW – 10A

Ⓐ Port size

Code	Description
Ⓐ Port size	
10A	R3/8
15A	R1/2

Internal structure and parts list/dimensions

● FMS-M5

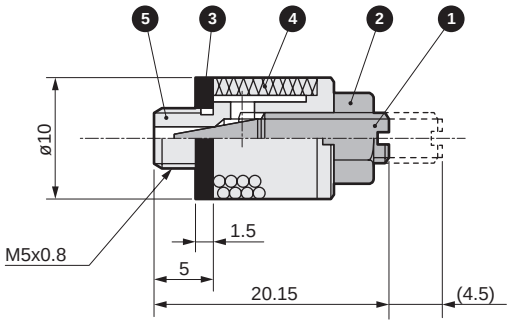

No.	Part name	Material
1	Needle	Copper alloy
2	Lock nut	Copper alloy
3	Gasket	Nitrile rubber
4	Filter	Copper alloy casting
5	Valve body	Copper alloy

● SMW-10A/15A

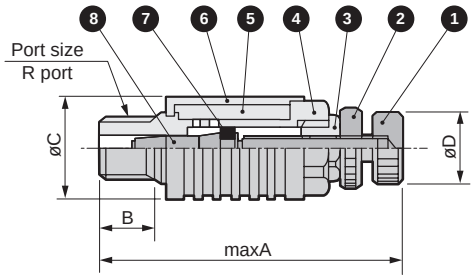

Model No.	A	B	C	D	Port size
SMW-10A	85	12	25	16	R3/8
SMW-15A	98	15	28	16	R1/2

No.	Part name	Material	No.	Part name	Material
1	Knob	Copper alloy	5	Sound absorbent material	Felt
2	Lock nut	Copper alloy	6	Cover	Polyamide resin
3	Gland nut	Copper alloy	7	O-ring	Nitrile rubber
4	Shaft body	Copper alloy	8	Spindle	Copper alloy

Flow characteristics

● FMS

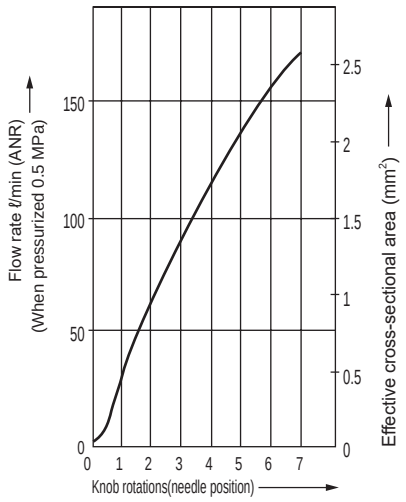

● SMW-10A/15A

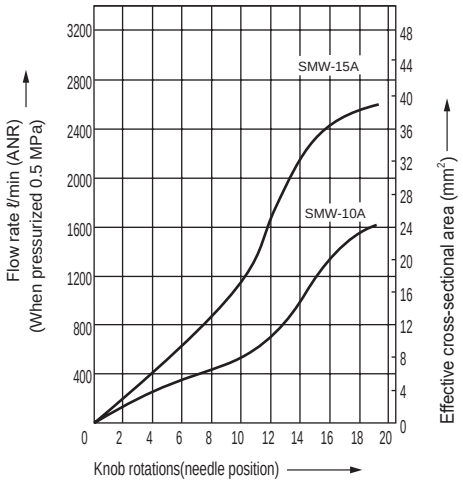

⚠ Safety precautions

● Tightening torque

Thread size	Tightening torque (N·m)
M5	1.0
R3/8	3.0
R1/2	3.0



Silencer Small bore size/resin body

SL/SLW Series

Noise reduction effect of 30 dB (A) or more.

● Port size: M5 / R1/8 to R1/2

JIS symbol

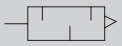

RoHS CAD

Specifications

Item	SL-M5	SLW-6□	SLW-8□	SLW-10□	SLW-15□
Working fluid	Compressed air				
Max. working pressure MPa	1.0 (≈150 psi, 10 bar)				
Min. working pressure MPa	0 (≈0 psi, 0 bar)				
Proof pressure MPa	1.5 (≈220 psi, 15 bar)				
Fluid temperature °C	5 (41°F) to 60 (140°F) (no freezing. *2)				
Ambient temperature °C	-10 (14°F) to 60 (140°F) (no freezing)				
Port size R/NPT/G	M5	1/8	1/4	3/8	1/2
Weight g	5	3.5	7.5	15	21
Cylinder bore size mm	ø6 to ø15	ø20 to ø80	ø32 to ø80	ø50 to ø100	ø50 to ø100
Noise reduction effect dB	20 or more	30 or more			
Flow rate *1 ℓ/min (ANR)	300	650	1300	2000	4850
Effective cross-sectional area mm^2	5	10	20	30	75

*1: Flow rate is the atmospheric pressure conversion at 0.5 MPa.
*2: Freezing may occur due to adiabatic expansion depending on the air quality (dew point).

How to order

SL – M5

Ⓐ Port size	
M5	M5x0.8

Note: Sales unit is 2 pcs./bag.

SLW – 6A

Ⓐ Port size	
6A	R1/8
6N	NPT1/8
6G	G1/8
8A	R1/4
8N	NPT1/4
8G	G1/4
10A	R3/8
10N	NPT3/8
10G	G3/8
15A	R1/2
15N	NPT1/2
15G	G1/2

Internal structure and parts list/dimensions

● SL-M5

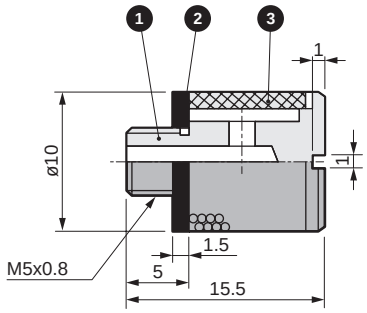

No.	Part name	Material
1	Body	Copper alloy
2	Gasket	Nitrile rubber
3	Element	Copper alloy sintering

● SLW-6A/8A/10A/15A

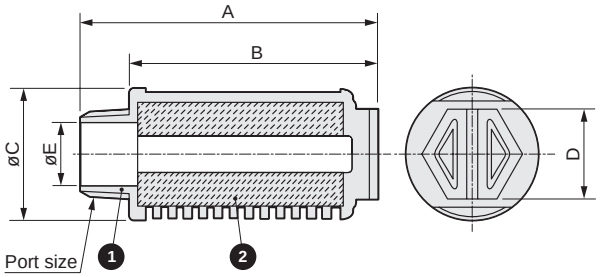

No.	Part name	Material	Color
1	Body	Polyamide resin (flame-resistant resin *)	White
2	Element	PP sintered resin	White

* UL94 Standards V-0 equivalent

Model No.	A	B	C	D	E	Port size	
						A	N
SLW-6 □	34	28	16.5	10	7	R1/8	NPT1/8
SLW-8 □	44.5	36	20	13	8.5	R1/4	NPT1/4
SLW-10 □	58.5	48.5	25.5	17	12	R3/8	NPT3/8
SLW-15 □	71.4	58.4	28	19	15	R1/2	NPT1/2

⚠ Safety precautions

● Use tightening torque equivalent to the tightening strength of a human hand. (Refer to the table below for tightening torque guidelines.)

Thread size	Tightening torque (N·m)
M5	1.0
R1/8	1.0
R1/4	2.5
R3/8	3.0
R1/2	3.0



Silencer: High noise reduction/small bore size/resin body

SLW-*A-H Series

● Port size: Rc1/4 to Rc1/2

JIS symbol 

RoHS CAD

Specifications

Item	SLW-8A-H	SLW-10A-H	SLW-15A-H
Working fluid	Compressed air		
Max. working pressure MPa	1.0 (≈150 psi, 10 bar)		
Min. working pressure MPa	0 (≈0 psi, 0 bar)		
Proof pressure MPa	1.5 (≈220 psi, 15 bar)		
Fluid temperature °C	5 (41°F) to 60 (140°F) (no freezing. *2)		
Ambient temperature °C	-10 (14°F) to 60 (140°F) (no freezing)		
Port size R	1/4	3/8	1/2
Weight g	7.5	15	21
Cylinder bore mm	ø32 to ø80	ø50 to ø100	ø50 to ø100
Noise reduction effect dB [A]	40 or more		
Flow rate *1 ℓ/min (ANR)	1000	2000	3250
Effective cross-sectional area mm^2	15	30	50

*1: Flow rate is the atmospheric pressure conversion at 0.5 MPa.
*2: Freezing may occur due to adiabatic expansion depending on the air quality (dew point).

How to order

SLW – 8A – H

Ⓐ Port size	
8A	R1/4
10A	R3/8
15A	R1/2

Safety precautions

● Use tightening torque equivalent to the tightening strength of a human hand and do not apply a lateral load. (Refer to the table below for tightening torque guidelines.)

Thread size	Tightening torque (N·m)
R1/4	2.5
R3/8	3.0
R1/2	3.0

Internal structure and parts list/dimensions

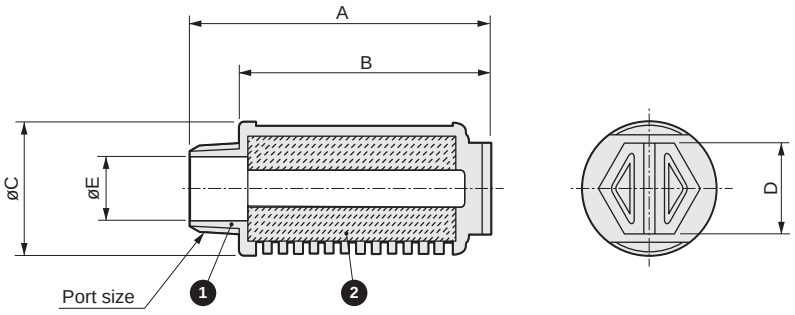

No.	Part name	Material	Color
1	Body	Polyamide resin (flame-resistant resin *)	White
2	Element	PP sintered resin	Light yellow

* UL94 Standards V-0 equivalent

Model No.	A	B	C	D	E	Port size
SLW-8A-H	44.5	36	20	13	8.5	R1/4
SLW-10A-H	58.5	48.5	25.5	17	12	R3/8
SLW-15A-H	71.4	58.4	28	19	15	R1/2



Silencer: Large flow rate/small bore size/resin body

SLW-*L Series

● Port size: R1/4 / R3/8

JIS symbol 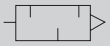

RoHS CAD

Specifications

Item		SLW-8L	SLW-10L
Working fluid		Compressed air	
Max. working pressure	MPa	1.0 (≈150 psi, 10 bar)	
Min. working pressure	MPa	0 (≈0 psi, 0 bar)	
Proof pressure	MPa	1.5 (≈220 psi, 15 bar)	
Fluid temperature	°C	5 (41°F) to 60 (140°F) (no freezing. *2)	
Ambient temperature	°C	-10 (14°F) to 60 (140°F) (no freezing)	
Port size	R	1/4	3/8
Weight	g	15	19.5
Cylinder bore	mm	ø32 to ø80	ø50 to ø100
Noise reduction effect	dB [A]	30 or more	
Flow rate *1	ℓ/min(ANR)	2000	4000
Effective cross-sectional area	mm^2	30	60

*1: Flow rate is the atmospheric pressure conversion at 0.5 MPa.
*2: Freezing may occur due to adiabatic expansion depending on the air quality (dew point).

How to order

SLW – 8L

Ⓐ Port size	
8L	R1/4
10L	R3/8

Safety precautions

● Use tightening torque equivalent to the tightening strength of a human hand. (Refer to the table below for tightening torque guidelines.)

Thread size	Tightening torque (N·m)
R1/4	2.5
R3/8	3.0

Internal structure and parts list/dimensions

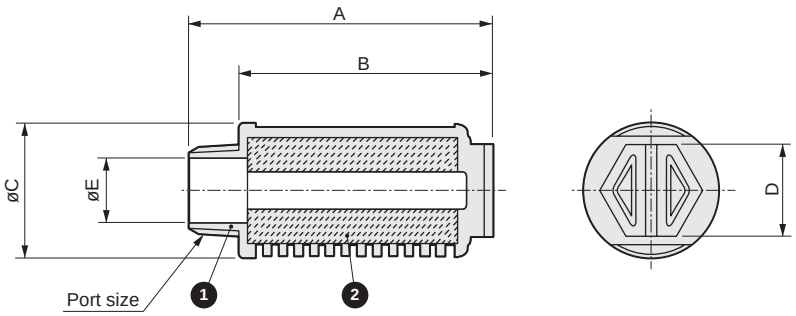

No.	Part name	Material	Color
1	Body	Polyamide resin (flame-resistant resin *)	White
2	Element	PP sintered resin	White

* UL94 Standards V-0 equivalent

Model No.	A	B	C	D	E	Port size
SLW-8L	57.4	48.5	25.5	17	8.5	R1/4
SLW-10L	68.2	58.4	28	19	12	R3/8

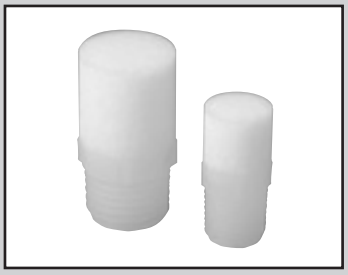

Silencer: High noise reduction/compact

SLW-6S/8S Series

Compact and lightweight, with a noise reduction effect of 25 dB (A) and over

JIS symbol 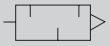

RoHS CAD

Specifications

Item	SLW-6S	SLW-8S
Working fluid	Compressed air	
Max. working pressure MPa	1.0 (≈150 psi, 10 bar)	
Min. working pressure MPa	0 (≈0 psi, 0 bar)	
Proof pressure MPa	1.5 (≈220 psi, 15 bar)	
Fluid temperature °C	5 (41°F) to 60 (140°F) (no freezing. *2)	
Ambient temperature °C	-10 (14°F) to 60 (140°F) (no freezing)	
Port size R	1/8	1/4
Weight g	1.0	2.0
Cylinder bore mm	ø20 to ø80	ø32 to ø80
Noise reduction effect dB [A]	25 or more	28 or more
Flow rate *1) ℓ/min(ANR)	800	1900
Effective cross-sectional area mm^2	12	30

*1: Flow rate is the atmospheric pressure conversion at 0.5 MPa.
*2: Freezing may occur due to adiabatic expansion depending on the air quality (dew point).

How to order

SLW – 8 S

Ⓐ Port size	
6	R1/8
8	R1/4

Safety precautions

Use tightening torque equivalent to the tightening strength of a human hand.
(Refer to the table below for tightening torque guidelines.)

Thread size	Tightening torque (N·m)
R1/8	0.1 to 0.15
R1/4	0.15 to 0.25

Dimensions and internal structure CAD

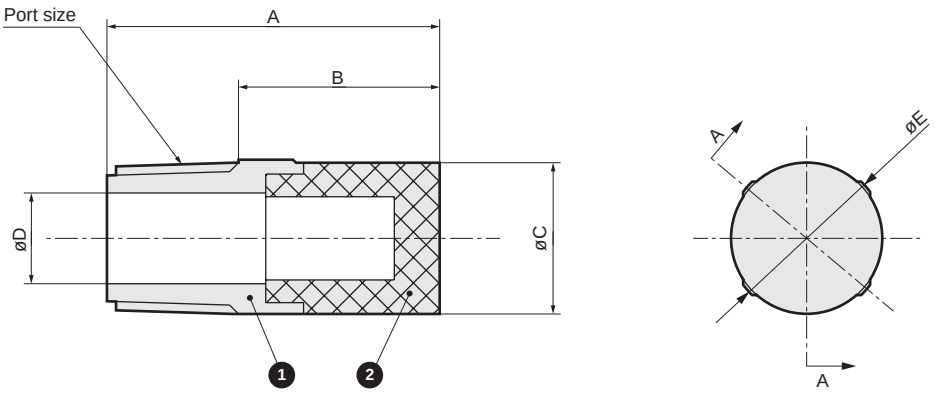

Cross-section A-A

No.	Part name	Material	Color
1	Body	PP	White
2	Element	PP sintered resin	White

Model No.	Port size	A	B	C	D	E
SLW-6S	R1/8	22	13.3	10.5	6	10.5
SLW-8S	R1/4	28	19	14.8	9	15.4



Silencer: High noise reduction/compact

SLW-20S Series

Compact with a noise reduction effect of 30 dB [A] and over

JIS symbol 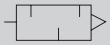

RoHS CAD

Specifications

Item	SLW-20S
Working fluid	Compressed air
Max. working pressure MPa	1.0 (≈150 psi, 10 bar)
Min. working pressure MPa	0 (≈0 psi, 0 bar)
Proof pressure MPa	1.5 (≈220 psi, 15 bar)
Fluid temperature °C	5 (41°F) to 60 (140°F) (no freezing. *2)
Ambient temperature °C	-10 (14°F) to 60 (140°F) (no freezing)
Port size R	3/4
Weight g	20
Cylinder bore mm	ø100 to ø200
Noise reduction effect dB [A]	30 or more
Flow rate *1) ℓ/min(ANR)	6000
Effective cross-sectional area mm^2	90

*1: Flow rate is the atmospheric pressure conversion at 0.5 MPa.
*2: Freezing may occur due to adiabatic expansion depending on the air quality (dew point).

How to order

SLW – 20 S

Ⓐ Port size	
20	R3/4

Safety precautions

Use tightening torque equivalent to the tightening strength of a human hand.
(Refer to the table below for tightening torque guidelines.)

Thread size	Tightening torque (N·m)
R3/4	3.0

Dimensions and internal structure

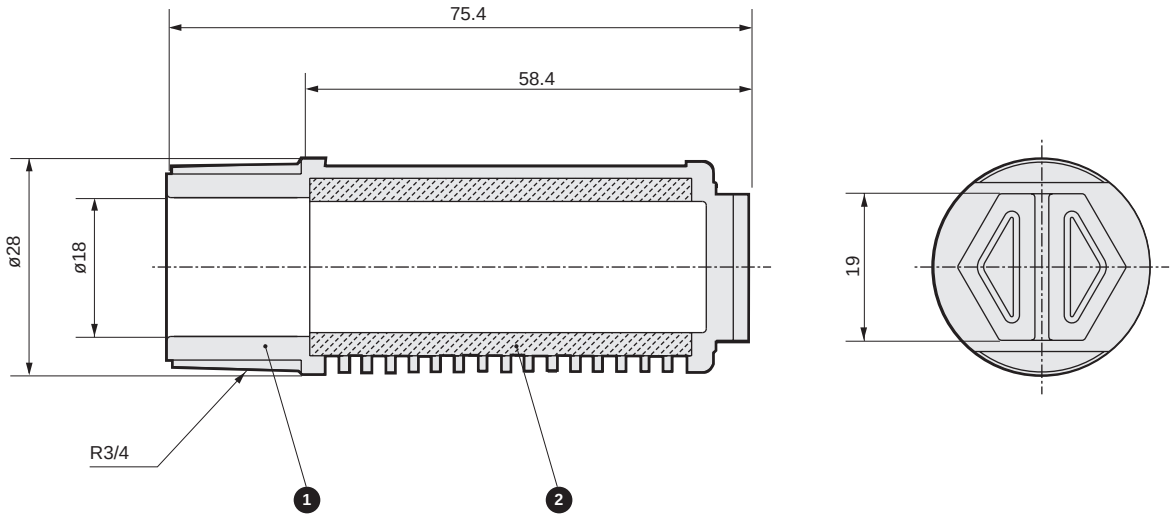

No.	Part name	Material	Color
1	Body	Polyamide resin (flame-resistant resin *)	White
2	Element	PP sintered resin	White

* UL94 Standards V-0 equivalent

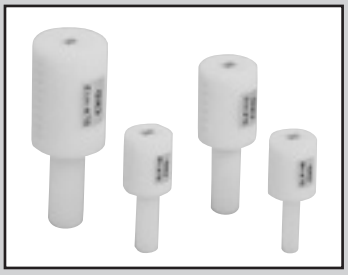

Silencer Push-in

SLW-H* Series

● Port size: ø6, ø8, ø10, ø12

JIS symbol 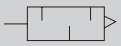

RoHS CAD

Specifications

Item	SLW-H6	SLW-H8	SLW-H10	SLW-H12
Working fluid	Compressed air			
Max. working pressure MPa	0.7 (≈100 psi, 7 bar)			
Min. working pressure MPa	0 (≈0 psi, 0 bar)			
Proof pressure MPa	1.05 (≈150 psi, 10.5 bar)			
Fluid temperature °C	5 (41°F) to 60 (140°F) (no freezing. *2)			
Ambient temperature °C	-10 (14°F) to 60 (140°F) (no freezing)			
Port size	ø6	ø8	ø10	ø12
Weight g	3.5	3.5	6.2	12.5
Noise reduction effect dB(A)	20 or more			
Flow rate *1 ℓ/min	455	550	1135	1655
Effective cross-sectional area mm^2	7	8.5	17.5	25.5

*1: Flow rate is the atmospheric pressure conversion at 0.5 MPa.
*2: Freezing may occur due to adiabatic expansion depending on the air quality (dew point).

How to order

SLW - H6

Ⓐ Port size	
H6	ø6
H8	ø8
H10	ø10
H12	ø12

Dimensions and internal structure

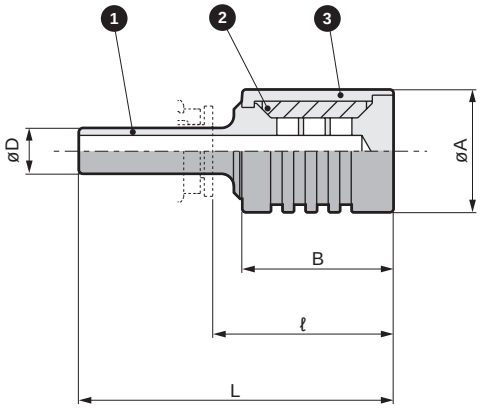

No.	Part name	Material
1	Shaft body	Polyamide resin
2	Element	Felt
3	Cover	Polyamide resin

Model No.	A	B	D	L	ℓ*
SLW-H6	16	20	ø6	41	23.5
SLW-H8	16	20	ø8	42	23
SLW-H10	20	27	ø10	53	31.5
SLW-H12	25	37	ø12	66	43

* For connection fitting, dimensions of CKD (GW Series) are shown.

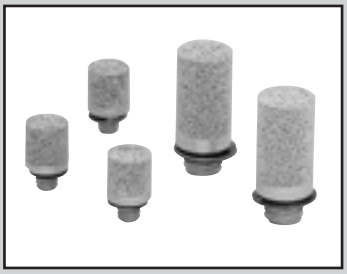

Silencer: Miniature

SLM Series

Compact with a noise reduction effect of 20 dB [A] and over

JIS symbol 

RoHS CAD

Specifications

Item	SLM-M3	SLM-M5
Working fluid	Compressed air	
Max. working pressure MPa	1.0 (≈150 psi, 10 bar)	
Min. working pressure MPa	0 (≈0 psi, 0 bar)	
Proof pressure MPa	1.5 (≈220 psi, 15 bar)	
Fluid temperature °C	5 (41°F) to 60 (140°F) (no freezing. *2)	
Ambient temperature °C	-10 (14°F) to 60 (140°F) (no freezing)	
Port size	M3	M5
Weight g	1.0	3.0
Cylinder bore mm	ø6 or less	ø6 to ø15
Noise reduction effect dB [A]	20 or more	
Flow rate *1) ℓ/min(ANR)	60	350
Effective cross-sectional area mm^2	1	5

*1: Flow rate is the atmospheric pressure conversion at 0.5 MPa.
*2: Freezing may occur due to adiabatic expansion depending on the air quality (dew point).

How to order

SLM - M3

Ⓐ Port size

Ⓐ Port size	
M3	M3
M5	M5

Note: Sales unit is 10 pcs./bag.

Safety precautions

- Use tightening torque equivalent to the tightening strength of a human hand.
  (Refer to the table below for tightening torque guidelines.)

Thread size	Tightening torque (N·m)
M3	0.1 to 0.15
M5	0.2 to 0.25

- Avoid use in areas with large vibration or impact. Provide measures against loosening in such areas.

Dimensions and internal structure CAD

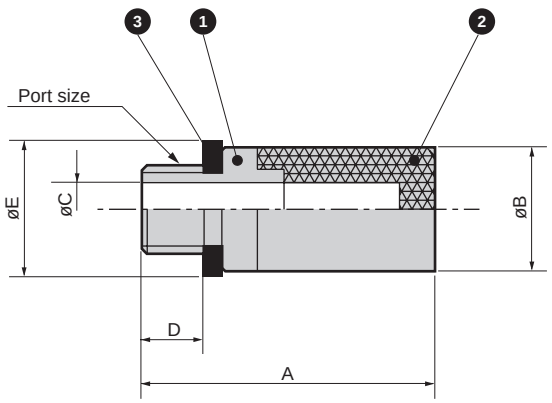

No.	Part name	Material	Color
1	Body	Copper alloy	Silver
2	Element	Copper alloy sintering	Silver
3	Gasket	Nitrile rubber + steel	—

Model No.	A	B	C	D	E	Port size
SLM-M3	9	5.5	1.4	2.6	4.9	M3x0.5
SLM-M5	16.5	7	3	3.4	7.8	M5x0.8



Silencer: Metal body

SL Series

● Port size: R1/4 to R2

JIS symbol 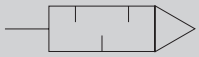

RoHS CAD

Features

- SL-8A to 25A has been upgraded, integrating the entire series in a lightweight/compact design.
  · Weight ratio (SL-8A to 25A) reduced by 50% or more compared to conventional CKD model
- The replaceable element extends product life.
- The product is eco-friendly.
  · Chromate treatment (hexavalent chromium) has been eliminated.
  · The coating has been eliminated.
  · Segregated disposal is possible.
- Noise reduction effect of 20 dB (A) or more

Specifications

Item	SL-8A	SL-10A	SL-15A	SL-20A	SL-25A	SL-32A	SL-40A	SL-50A
Working fluid	Compressed air							
Max. working pressure MPa	0.9 (≈130 psi, 9 bar)							
Min. working pressure MPa	0 (≈0 psi, 0 bar)							
Proof pressure MPa	1.35 (≈200 psi, 13.5 bar)							
Fluid temperature °C	5 (41°F) to 60 (140°F) (no freezing. *2)							
Ambient temperature °C	-10 (14°F) to 60 (140°F) (no freezing)							
Port size R	1/4	3/8	1/2	3/4	1	1¼	1½	2
Weight g	75	100	105	245	250	450	450	650
Cylinder tube size	ø50 to ø100	ø63 to ø140	ø75 to ø180	ø100 to ø250	ø140 to ø250	ø140 to ø450	ø140 to ø450	ø300 to ø450
Noise reduction effect dB [A]	20 or more							
Flow rate *1 m^3/min(ANR)	2.4	3.2	4.1	12	14	17	17.5	33
Effective cross-sectional area mm^2	36	48	61	160	210	250	260	500

*1: Flow rate is the atmospheric pressure conversion value at pressure 0.5 MPa
*2: Freezing may occur due to adiabatic expansion depending on the air quality (dew point).

How to order

SL - 8A

● Replacement element

SL - 8A - EL

Ⓐ Port size	
8A	R1/4
10A	R3/8
15A	R1/2
20A	R3/4
25A	R1
32A	R1 1/4
40A	R1 1/2
50A	R2

Dimensions/internal structure and main parts list

● SL-8A to 50A

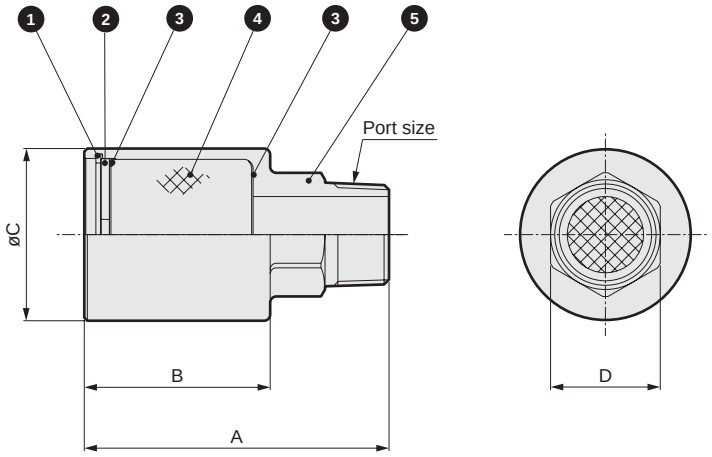

Model No.	Port size	A	B	øC	D
SL-8A	R1/4	64	41	30	17
SL-10A	R3/8	74.5	49.5	36	24
SL-15A	R1/2	77.5	49.5	36	24
SL-20A	R3/4	98	61	56	36
SL-25A	R1	100	61	56	36
SL-32A	R1 1/4	100	58	72	55
SL-40A	R1 1/2	100	58	72	55
SL-50A	R2	108	58	89	70

No.	Part name	Material
1	C type snap ring	Steel (8A to 25A)
		Stainless steel (32A to 50A)
2	Perforated metal	Steel
3	Wire mesh	Stainless steel
4	Element	Vinylidene chloride (8A to 25A)
		Urethane (32A to 50A)
5	Body	Aluminum alloy

Safety precautions

· Tighten pipes with the appropriate torque.
· Check that the C type snap ring does not pop off when removed or attached.
· Assemble the C type snap ring accurately when replacing the element. Parts used inside could pop out and cause problems if assembly is not complete.
· Depending on the work, the silencer could clog and reduce exhaust. Service the product by replacing the element regularly.
· Silencing values are based on JIS standards. Silencing could vary with the type of circuit and pressure used.

[Recommended tightening torque]

Port thread	Tightening torque N·m
R1/4	6 to 8
R3/8	13 to 15
R1/2	16 to 18
R3/4	19 to 40
R1	41 to 70
R1 1/4	43 to 75
R1 1/2	45 to 80
R2	47 to 85



Silencer Metal body Outdoor Series

SL-W Series

● Port size: R1/4 to R1/2

JIS symbol

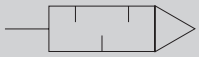

RoHS CAD

Specifications

1 MPa ≈ 145.0 psi, 1 MPa = 10 bar

Item	SL-8A-W	SL-10A-W	SL-15A-W
Working fluid	Compressed air		
Max. working pressure MPa	0.9 (≈130 psi, 9 bar)		
Min. working pressure MPa	0 (≈0 psi, 0 bar)		
Proof pressure MPa	1.35 (≈195 psi, 13 bar)		
Fluid temperature °C	5 (41°F) to 60 (140°F)		
Ambient temperature °C	-10 (14°F) to 60 (140°F) (no freezing)		
Port size R	1/4	3/8	1/2
Weight g	75	100	105
Applicable cylinder tube size	ø50 to ø100	ø63 to ø140	ø75 to ø180
Noise reduction effect dB [A]	20 or more		
Flow rate (*1) m^3/min (ANR)	2.4	3.2	4.1
Effective cross-sectional area mm^2	36	48	61

*1: Flow rate is the atmospheric pressure conversion value at pressure 0.5 MPa.

How to order

SL - 8A - W

● Replacement element

SL - 8A - EL

Ⓐ Port size	
8A	R1/4
10A	R3/8
15A	R1/2

Dimensions/Internal structure and main parts list

● SL-8A to 15A-W

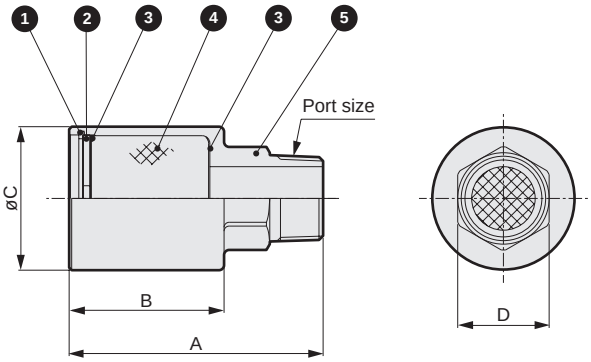

Model No.	Port size	A	B	øC	D
SL-8A-W	R1/4	64	41	30	17
SL-10A-W	R3/8	74.5	49.5	36	24
SL-15A-W	R1/2	77.5	49.5	36	24

No.	Part name	Material
1	C-snap ring	Stainless steel
2	Perforated metal	Stainless steel
3	Wire mesh	Stainless steel
4	Element	Vinylidene chloride
5	Body	Aluminum

⚠ Safety precautions

■ Design/selection

⚠ WARNING

● This product is for industrial use. Do not use for medical purposes, or in any equipment or circuit that concerns human life.

■ Working environment

● This product has outdoor specifications, but should not be used in the following environments.

- When the ambient temperature and product temperature exceed the range of -10 to 60°C.
  (The product temperature is at risk of exceeding the ambient temperature when exposed to direct sunlight.)
- Where air freezes.
- In atmospheres containing corrosive gases, liquids and chemicals.
- Locations with vibration or impact.

■ Use/maintenance

⚠ WARNING

● Do not install the exhaust outlet of the silencer facing upward. Also, implement measures to prevent foreign matter, dust, and rainwater from entering the exhaust outlet.

⚠ CAUTION

● Use appropriate torque to tighten the pipes when connecting them.

[Recommended tightening torque]

Port thread	Tightening torque N·m
R1/4	6 to 8
R3/8	13 to 15
R1/2	16 to 18

● Noise reduction effect values are based on JIS standards.
Silencing could vary with the type of circuit and pressure used.

● Use only compressed air. Air containing corrosive gases, fluids, or chemicals could result in body damage or rubber deterioration.

● This product is guaranteed for outdoor use, but not corrosion resistance (no rust or discoloration).

⚠ CAUTION

● Do not apply a load to the product outside the parameters of use. (Do not climb/step onto the product.)

● Check that the C snap ring of the silencer does not pop off when removed or attached.

● Assemble the C snap ring of the silencer accurately when replacing the element.
Parts used inside could pop out and cause problems if assembly is not complete.

● Depending on the working conditions, the element could clog and reduce exhaust in the silencer.
Service, clean, and replace the element of the product regularly.

MEMO

Safety Precautions

Be sure to read this section before use.
Refer to Intro Page 59 for general precautions regarding pneumatic components and refer to "⚠ Safety precautions" for detailed precautions for individual series.

Design/selection

⚠ CAUTION

■ Use the product in the range of conditions specified for the product.
Consult with CKD when using the product for special applications.
- The exhaust port could become plugged if the silencer is clogged.
  Design safely to prevent the system from malfunctioning.
- Use of the product exceeding the specifications range may result in insufficient performance, and safety cannot be guaranteed.
- This product may not be usable in special applications and environments.
  For example, use for applications requiring safety, including nuclear energy, railways, aircraft, vehicles, medical devices, devices in contact with beverages or foodstuffs, amusement devices, emergency cutoff circuits, press machines, brake circuits, or safety devices or applications.

■ Confirm before use that the product will withstand the working environment.
- This product cannot be used in environments where functional obstacles could occur.
  Such environments include high temperatures, chemical atmospheres, where chemical liquids, vibration, moisture, water dripping, or gas is present; or where ozone is generated.

Mounting, installation and adjustment

Piping

⚠ CAUTION

■ When connecting pipes, wrap sealing tape in the opposite direction from the threading, from the inside position to within 2 mm from the pipe end.
- If sealing tape protrudes from the pipe threads, it could be cut when screwing the bolts in. This could cause the tape to enter the pneumatic components, causing failures.



■ Use appropriate torque to tighten the pipes when connecting them.
- The purpose is to prevent air leakage and damage to bolts.
- Refer to the corresponding section for the appropriate torque for the series.

■ Install the silencer so that exhaust air does not blow directly into eyes.

■ Do not apply lateral load to the body during or after installation.

■ Secure space around the silencer for installation and removal.

■ Handling push-in fittings and tubes
- For handling of push-in fittings and tubes, refer to Warnings and Cautions for fittings/tubes (CB-024SA General Pneumatic Auxiliary Components).

MEMO



Exhaust cleaner

FA Series

Exhaust noise and oil mist have been minimized.

● Port size: Rc3/8 to Rc2

JIS symbol



RoHS CAD

Specifications

Item	FA331-10A	FA431-15A	FA531-20A	FA631-25A	FA731-40A	FA831-50A
Port size Rc	3/8	1/2	3/4	1	1 1/2	2
Effective cross-sectional area mm²	16	33	55	165	330	550
Max. processing flow rate m³/min(ANR)	0.3	0.6	1	3	6	10
Fluid temperature	5 (41°F) to 65°C (149°F) (no freezing)					
Ambient temperature	0 (32°F) to 65°C (149°F) (no freezing)					
Noise reduction effect	35 dB and over (at the max. processing flow rate in oil saturated state)					
Oil mist collection efficiency	99.9% and over					
Oil storage capacity cm³	80	130	150	250	350	550
Weight kg	0.2	0.3	0.4	0.6	1.1	1.5
Bracket No. (option)	B351-10A	B451-15A	B551-20A	B651-25A	-	-

Flow characteristics

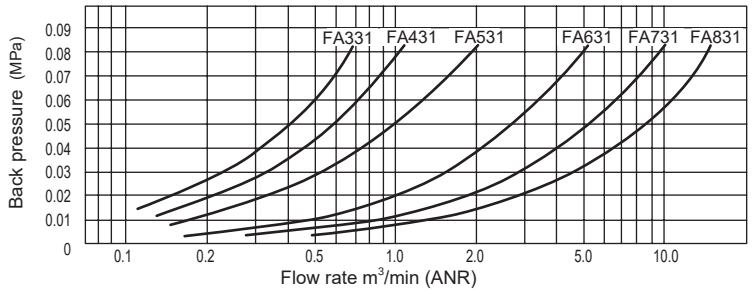

Selection guide

Select an exhaust cleaner based on the air consumption in the circuit being used.

(1) Calculate the air consumption for the actuator being used.

(2) Multiply the calculated air consumption by 1.4.

(3) Select a model that has a flow rate exceeding the air consumption multiplied by 1.4.

The figure below shows the air consumption when multiplied by 1.4 for each air cylinder size. Use this graph to select a model.

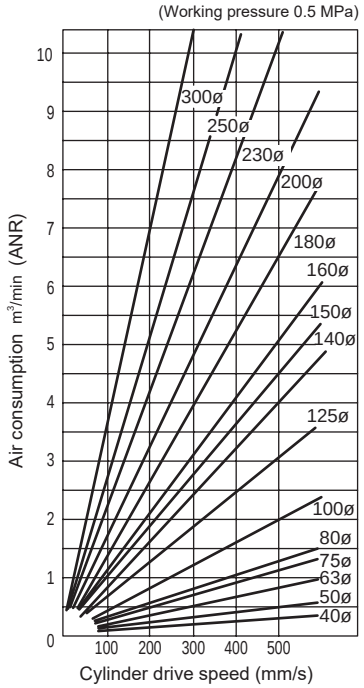

How to order

FA 3 31- 10A - B

Exhaust cleaner

Ⓐ Series code

Ⓑ Port size *1

Ⓒ Option *2

Code	Description
Ⓐ Series code	
3	Compact
4	Standard
5	Large
6	Large
7	Large bore size
8	Large bore size

Ⓑ Port size	Series	3	4	5	6	7	8
10A	Rc3/8	●					
15A	Rc1/2		●				
20A	Rc3/4			●			
25A	Rc1				●		
40A	Rc1 1/2					●	
50A	Rc2						●

Ⓒ Option							
Blank	Not attached	●	●	●	●	●	●
B	Bracket	●	●	●	●		

Precautions for model No. selection

*1: If port size NPT thread is required, do not indicate nominal size A. (Example) FA431-15

*2: Bracket option is not available for FA731 and FA831.

Internal structure and parts list

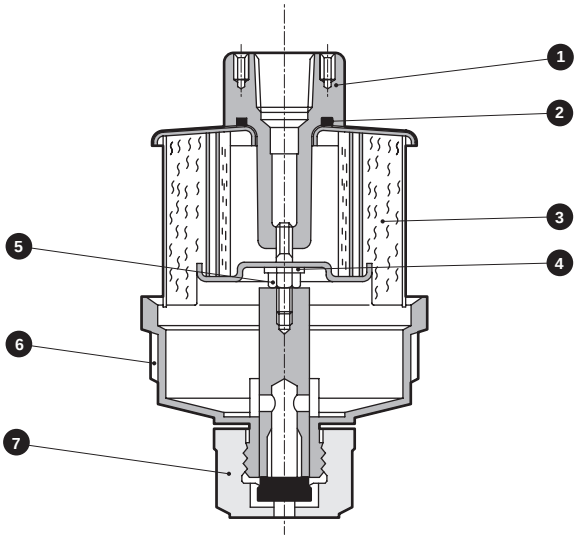

No.	Part name	Material					
		FA331	FA431	FA531	FA631	FA731	FA831
1	Adaptor assembly	Aluminum alloy die-casting, steel				Aluminum alloy casting, steel	
2	O-ring	Nitrile rubber					
3	Element assembly	Aluminum alloy, steel, glass fiber					
4	Gasket	Polyacetal resin					
5	Nut	Steel					
6	Case assembly	Polycarbonate resin, aluminum alloy					
7	Drain cock assembly	Nitrile rubber, polyamide resin					

Dimensions CAD

● FA331 to FA631

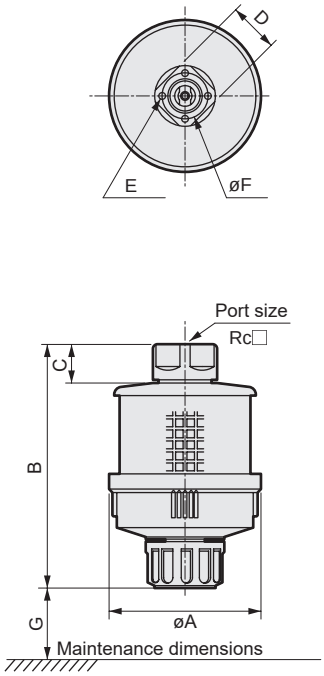

● FA731 to FA831

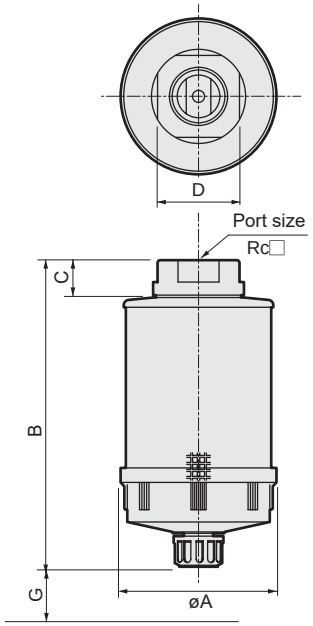

● Bracket (option)

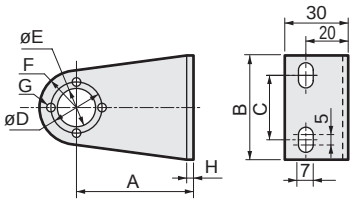

Note) Four screws for mounting the body are attached.

Model No.	A	B	C	D	E	F	G	H	Wt kg
B351-10A	55	50	30	24	ø18	R16.5	4-ø3.5	2.3t	0.07
B451-15A	60	60	40	32	ø23	R20	4-ø4.5	2.3t	0.09
B551-20A	70	70	40	40	ø29	R25.4	4-ø4.5	3.2t	0.16
B651-25A	80	70	40	48	ø37	R27.5	4-ø4.5	3.2t	0.18

Common piping method

When many valves are used in one place, common piping method is recommended.

● Easy maintenance control

● Low cost

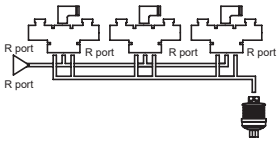

Model No.	FA331	FA431	FA531	FA631	FA731	FA831
A	80	90	100	112	132	150
B	129	147	171	201	258	311
C	20	23	25	28	32	36
D	27	32	41	46	70	80
E	4-M3 (depth 7)	4-M4 (depth 8)	4-M4 (depth 8)	4-M4 (depth 10)	-	-
F	24	32	40	48	-	-
G	80	100	100	100	200	250
Port size	Rc$^{3}/_{8}$	Rc$^{1}/_{2}$	Rc$^{3}/_{4}$	Rc1	Rc1$^{1}/_{2}$	Rc2

Safety precautions

1 Drain the oil accumulated inside the case by opening the drain cock before the oil level reaches the element.

2 To connect a drain tube to the case, follow the following steps.

(1) Remove the drain cock.

(2) Screw in the R 1/8 male half union and connect the resin tube.

(3) Hold the adaptor assembly and screw in, taking care not to apply load to the case.

(4) If the back pressure increases to 0.1 MPa or more, replace the element assembly.

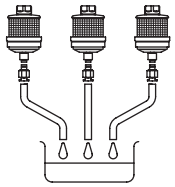

Exhaust cleaner Optional parts diagram

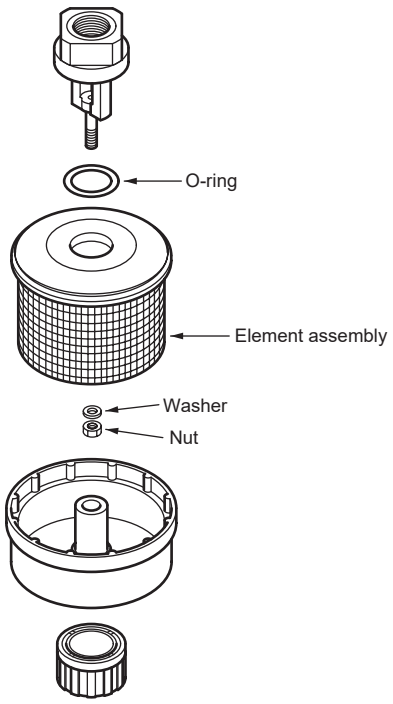

Element kit

(Element assembly, O-ring, washer and nut set)

Model	Element kit model No.
FA331-10A	FA331-ELEMENT
FA431-15A	FA431-ELEMENT
FA531-20A	FA531-ELEMENT
FA631-25A	FA631-ELEMENT
FA731-40A	FA731-ELEMENT
FA831-50A	FA831-ELEMENT

Total air systems

Overview

Total air systems are pneumatic control systems enabling configuration of cylinder control circuits, etc., using compressed air alone without electricity.

Features

(1) Circuit configuration enabled by compressed air only

(2) Superior safety
Since electricity is not used, safe in flammable atmosphere. Concerns about fire/electricity leakage, etc., are also eliminated.

(3) Highly economical
Power supply and safety devices are not required. Furthermore, since the same energy is used for power and control sections, all costs are reduced in design, manufacturing and maintenance, etc.

Page

Total Air system (Detector/circuit device) 1901

Gamma system (PLC/signal control components) 1943

TotAirSys (Total Air)

TotAirSys (Gamma)

Total air control systems

Total Air system

■ **Total air systems**

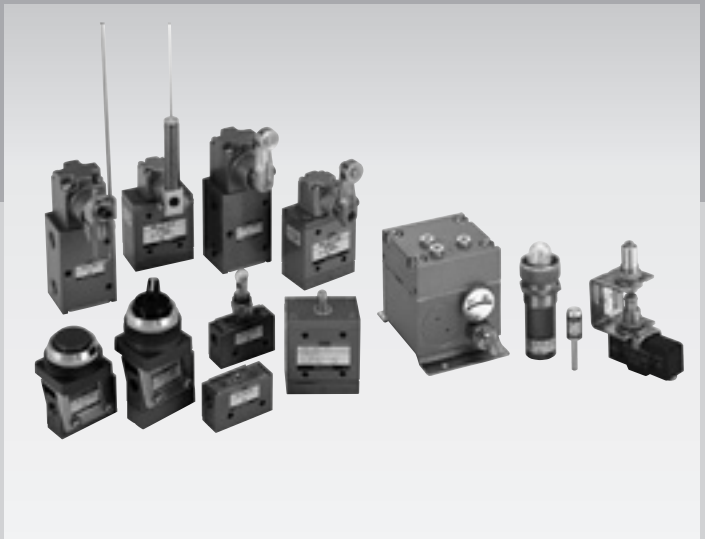

CONTENTS

Series variation	1902
Detector	1904
● Compact mechanical valve (MS)	1906
● Medium mechanical valve (MM)	1920
● Large mechanical valve (MAVL)	1932
Circuit device	1937
● Air timer (RTD-3A)	1938
● Pressure switch (PE-1)	1939
● Air lamp (AL-*)	1939
● Compact air lamp (SAL-*)	1940
⚠ Safety precautions	1942

Detector

Model	Product appearance	Valve	Connection	Operation															Effective cross-sectional area (mm^2)	Page
				Pin plunger	Roller lever	One way roller lever	Roller plunger	Straight plunger	Toggle switch	Push button valve	Mushroom valve	Select valve	Select valve (2 stations)	Roller arm	Adjusting roller lever	Rod lever	Wire lever	Spring lever		
Compact mechanical valve (MS)		Normally closed	Rc1/8	●	●	●	●	●	●	●	●	●	●						2.5	1906
			ø4 Push-in fitting	●	●	●	●	●	●	●	●	●	●						1.6	
		Normally open	Rc1/8	●	-	-	-	-	-	-	-	-	-						2.5	
			ø4 Push-in fitting	●	-	-	-	-	-	-	-	-	-						1.6	
Medium mechanical valve (MM)		Normally closed	Rc1/8	●	●									●	●	●	●	●	2.5	1920
			ø4 Push-in fitting	●	●									●	●	●	●	●	1.6	
		Normally open	Rc1/8	●	-									-	-	-	-	-	2.5	
			ø4 Push-in fitting	●	-									-	-	-	-	-	1.6	
Large mechanical valve (MAVL)		Both normally closed and normally open are available by piping method.	Rc1/4	●	●									●	●	●	●	●	31	1932

is not available.
- is available, but not specified in the catalog.

Circuit device

Model	Product appearance	Port size	Applications	Page
● Air timer RTD-3A		ø4 Push-in fitting	Delaying pneumatic signals for max. 30 seconds.	1938
● Pressure switch PE-1		ø4 Push-in fitting	Switching electric contact by 0.2 to 0.7 MPa of air signals.	1939
● Air lamp AL-R -B -Y		ø4 Push-in fitting	Confirming residual pressure and displaying operational status. (3 display colors are available; red, blue, and yellow)	1939
● Compact air lamp SAL-R -B		ø4	Confirming residual pressure and displaying operational status. (2 display colors are available: red and blue) Just insert a ø4 push-in fitting.	1940

Detector

A detector is used to confirm the cylinder position and the presence of material during control. A variety of TAS detectors are available to detect objects of different shapes and states. Optimum detection is ensured by selecting these devices.

Detector types



- Mechanical detection — Mechanical valve
  - MS Series mechanical valve (compact)
  - MM Series mechanical valve (medium)
  - MAVL Series mechanical valve (large)
- Non-contact detection by air flow
  - Interface valve (output: air signal)

Series	Features	Applications	Page
MS Series mechanical valve	Equivalent to electrical micro switch Compact and most commonly used.	Confirmation of cylinder, machine position and manual operation	1906
MM Series mechanical valve	Equivalent to compact/vertical electrical limit switch, great mechanical actuator strength. Actuators, such as rod lever and spring rod lever, etc., not available in the MS Series are now available. (Flow rate is the same as MS)	Confirmation of cylinder, machine, and material position	1920
MAVL Series mechanical valve	Equivalent to vertical electrical limit switch. The flow rate is large, so a ø80 cylinder can be moved directly.	Confirmation of cylinder, machine, and material position	1932

MEMO

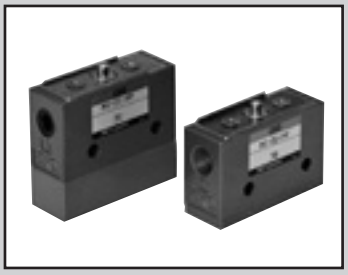

Compact mechanical valve

MS Series

This compact 3-way valve for pneumatic control is equivalent to a micro switch for electric devices and operates with mechanical detection or manual operation.

● Port size: Rc1/8, ø4

RoHS CAD

Common specifications

Item	MS-00 Normally closed	MS-01 Normally closed	MS-10 Normally open	MS-11 Normally open
Working fluid	Compressed air			
Valve structure	Poppet valve			
Min. working pressure MPa	0 (≈0 psi, 0 bar)			
Max. working pressure MPa	0.8 (≈120 psi, 8 bar)			
Proof pressure MPa	1.2 (≈170 psi, 12 bar)			
Port size	Rc1/8	ø4	Rc1/8	ø4
Effective cross-sectional area mm^2	2.5	1.6	2.5	1.6
Ambient temperature °C	5 (41°F) to 60 (140°F)			
Fluid temperature °C	5 (41°F) to 60 (140°F)			

Note: A normally open valve is a custom order product.

How to order

MS – 0 0 – PP

- Ⓐ Pressurization
- Ⓑ Connection port
- Ⓒ Type of operation actuator

Code	Description
Ⓐ Pressurization	
0	Normally closed valve
1	Normally open valve (custom order product)
4	4-way valve
Ⓑ Connection port	
0	Rc1/8 thread
1	Push-in fitting ø4
Ⓒ Operation actuator	
PP	Pin plunger
RL	Roller lever
RLOW	One way roller lever
RP	Roller plunger
SP	Straight plunger
TG	Toggle switch
PB1-*1	Pushbutton valve
ESP-*2	Mushroom valve
SE1	Select valve
SE2	Select valve (2-station)
***1 For push button color code (PB1)**	
Blank	Black, green, and red are contained. Make a selection depending on the color to be used.
Y	Yellow
***2 For mushroom color code (ESP)**	
B	Black
G	Green
R	Red
Y	Yellow

Piping connection method

For piping connection, either taper female pipe thread Rc1/8 connection or quick connection for an O.D. ø4 tube is selected based on the application.

● MS-00-□

Taper female pipe thread Rc1/8

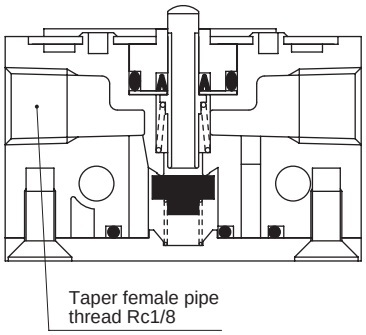

● MS-01-□

Push-in fitting for O.D. ø4 soft nylon

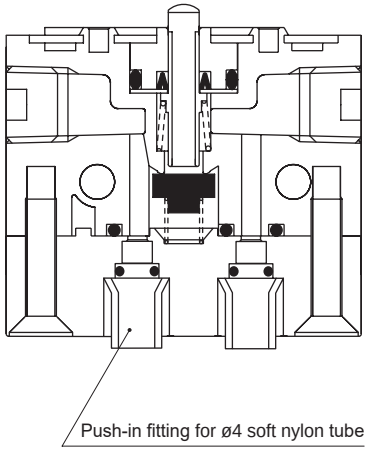

MS-00 is a taper female pipe thread Rc1/8 connection.
· General purpose connection is possible.
· Larger flow rate than MS-01 type.

MS-01 is a push-in fitting for O.D. ø4 soft nylon.
· Connection is made by simply inserting a soft nylon tube, so piping time is reduced significantly.
· Connecting bracket is not required. Therefore, there is no need to consider the extra space for a bracket.

Operational explanation drawing

Not operating

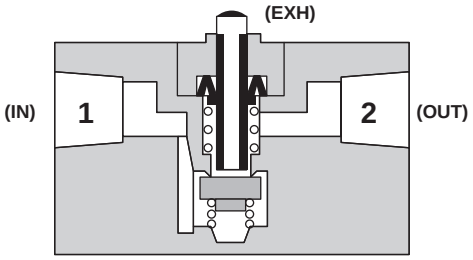

Operating

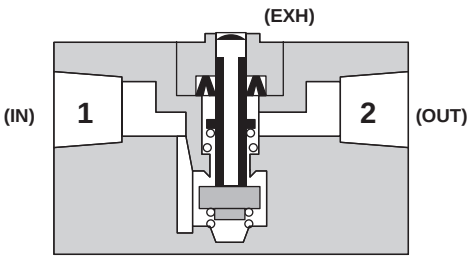

Note) Pressurization in the reverse direction (pressurized from Port 2) is not possible.

Internal structure and parts list

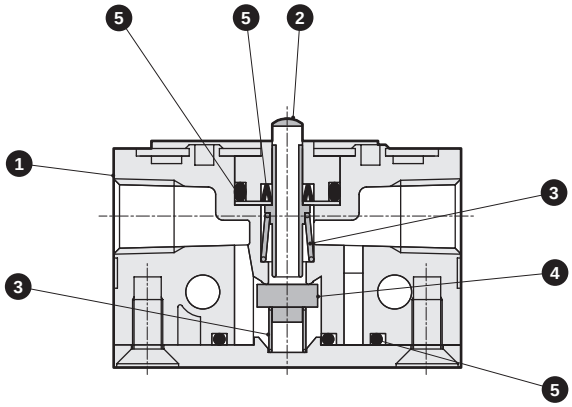

No.	Part	Material
1	Body	Zinc alloy
2	Spool	Stainless steel
3	Spring	Stainless steel
4	Valve	Nitrile rubber
5	Gasket	Nitrile rubber

Dimensions: Pin plunger (normally closed valve)

CAD



JIS symbol

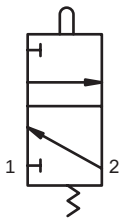

Specifications

Operation code	MS-00-PP, MS-01-PP
O.F	10.8 N (when pressurized at 0.49 MPa)
P.T	1.2 mm
O.T	1.8 mm
T.T	3 mm

Note: Use within 3 mm operation.
(If operated 3 mm and over repeatedly, the product may be damaged.)

Refer to page 1942 for the actuator operation code.

● MS-00-PP Rc1/8 connection (Weight: 110 g)

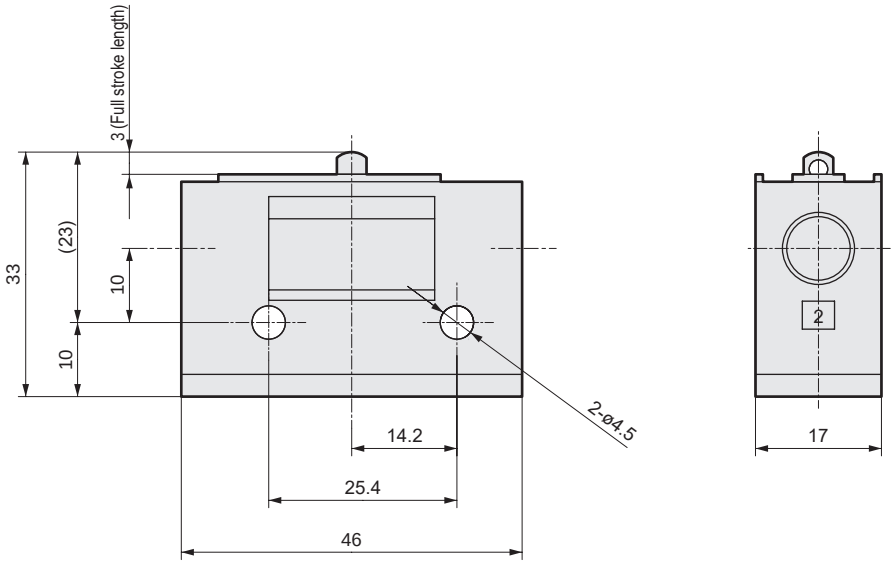

● MS-01-PP Push-in connection (Weight: 160 g)

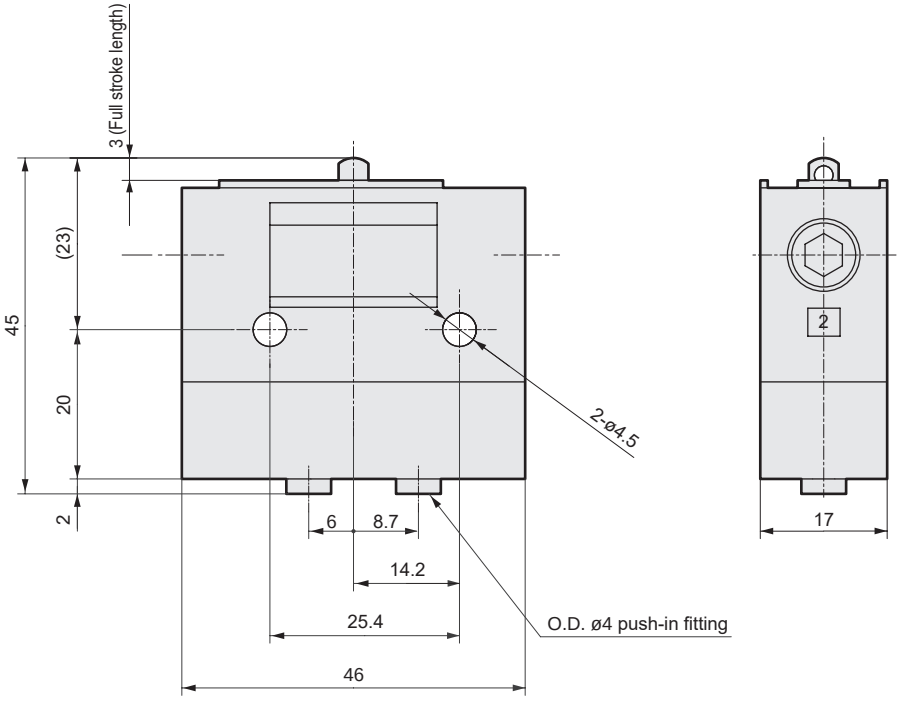

Dimensions: Roller lever (normally closed valve)



JIS symbol

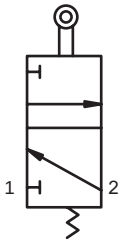

Specifications

Operation code	MS-00-RL,MS-01-RL
O.F	3.5 N (when pressurized at 0.49 MPa)
P.T	4.1 mm
O.T	2.9 mm
T.T	7 mm

Refer to page 1942 for the actuator operation code.

● MS-00-RL Rc1/8 connection (Weight: 120 g)

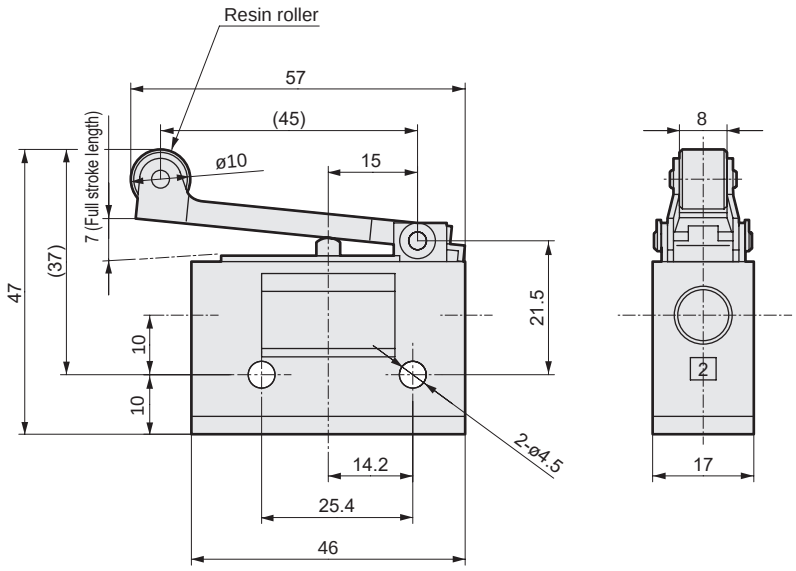

● MS-01-RL Push-in connection (Weight: 170 g)

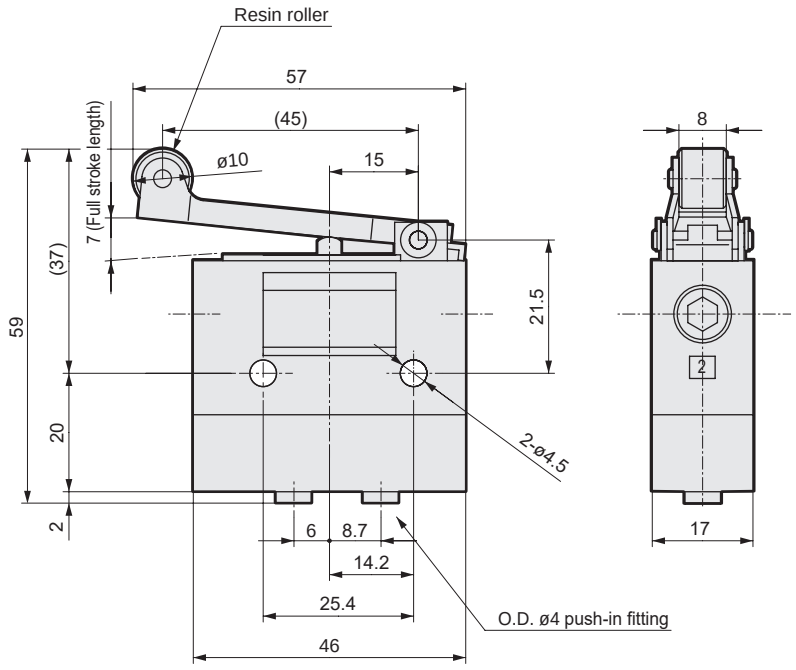

Dimensions: One way roller lever (normally closed valve)

CAD



JIS symbol

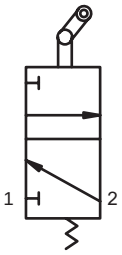

Specifications

Operation code	MS-00-RLOW,MS-01-RLOW
O.F	3.5 N (when pressurized at 0.49 MPa)
P.T	4.1 mm
O.T	2.9 mm
T.T	7 mm

Refer to page 1942 for the actuator operation code.

● MS-00-RLOW Rc1/8 connection (Weight: 130 g)

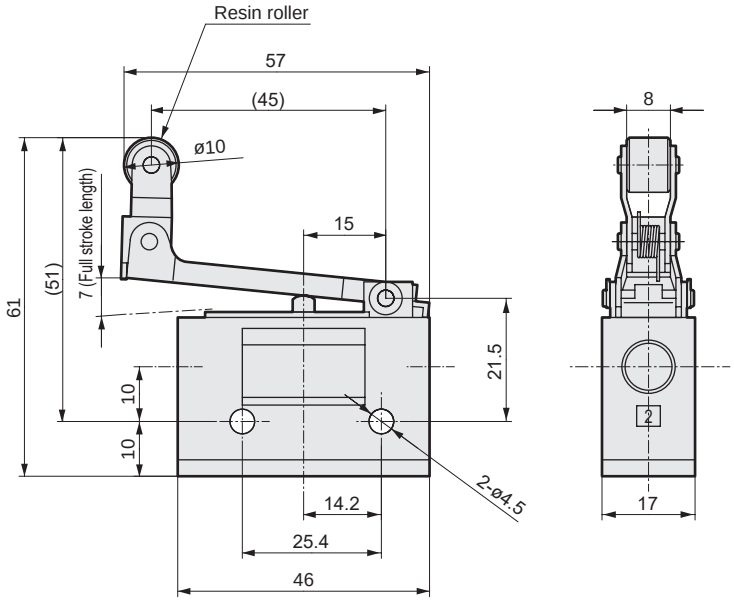

● MS-01-RLOW Push-in connection (Weight: 180 g)

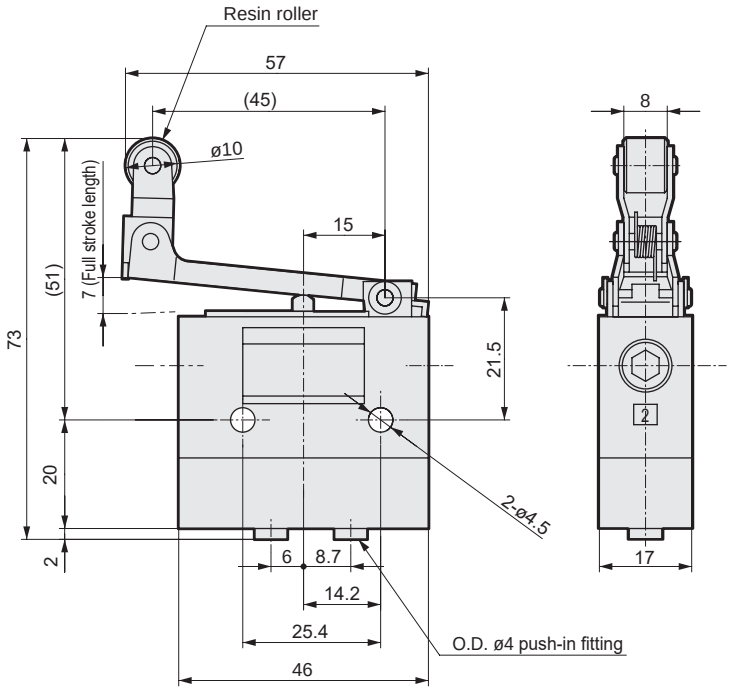

Dimensions: Roller plunger (normally closed valve)



JIS symbol

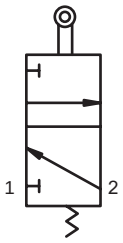

Specifications

Operation code	MS-00-RP,MS-01-RP
O.F	10.8 N (when pressurized at 0.49 MPa)
P.T	1.3 mm
O.T	3.7 mm
T.T	5 mm

Refer to page 1942 for the actuator operation code.

* If a roller is used while pushed and rotated, the roller section is worn away quickly, and the product may malfunction.

● MS-00-RP Rc1/8 connection (Weight: 140 g)

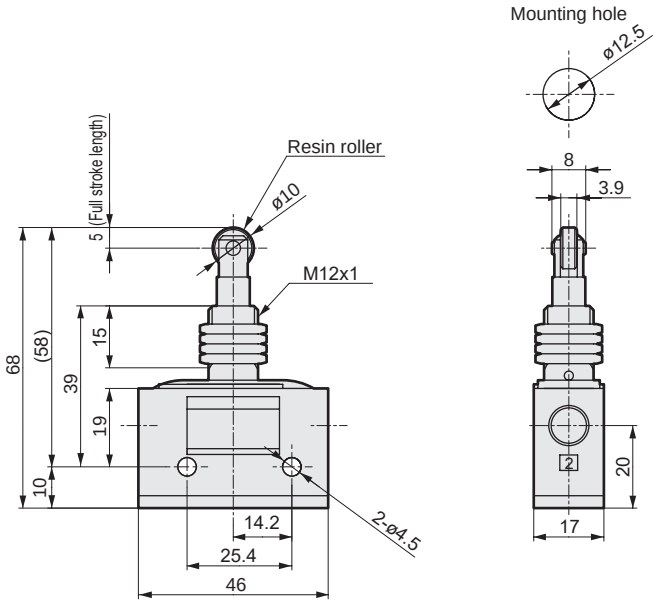

● MS-01-RP Push-in connection (Weight: 190 g)

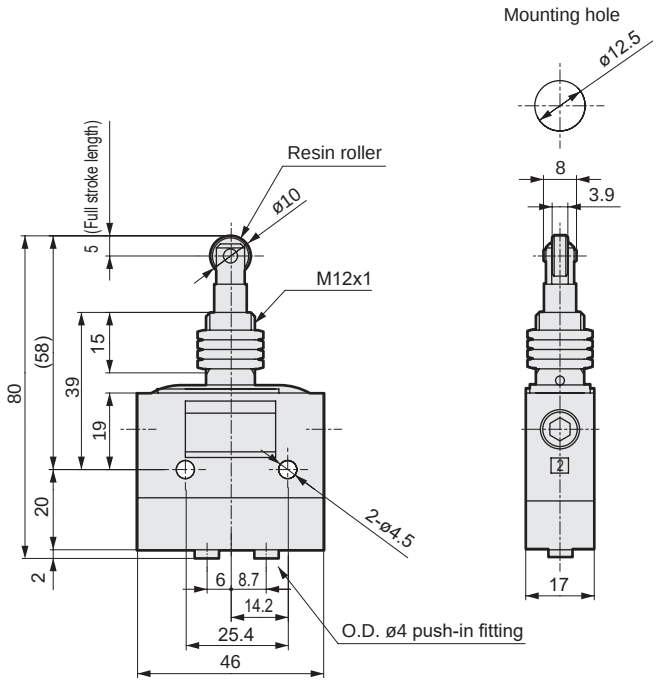

Dimensions: Straight plunger (normally closed valve)

CAD



JIS symbol

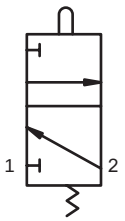

Specifications

Operation code	MS-00-SP, MS-01-SP
O.F	10.8 N (when pressurized at 0.49 MPa)
P.T	1.3 mm
O.T	3.7 mm
T.T	5 mm

Refer to page 1942 for the actuator operation code.

● MS-00-SP Rc1/8 connection (Weight: 140 g)

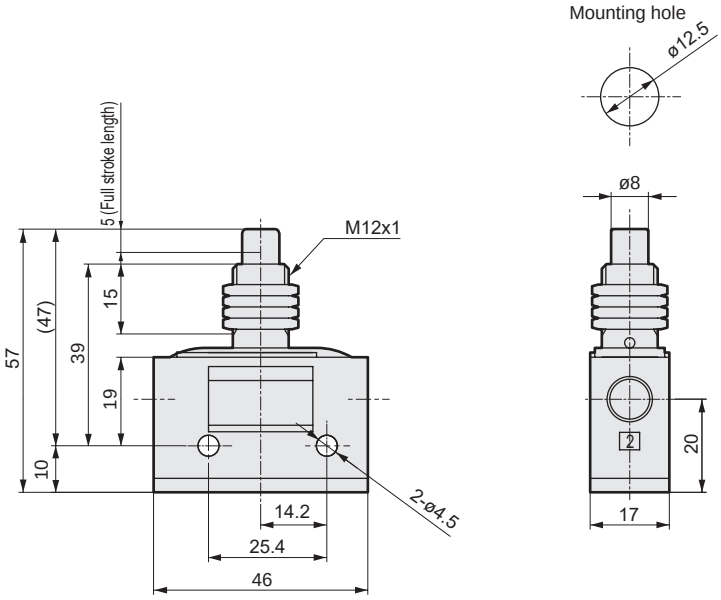

● MS-01-SP Push-in connection (Weight: 190 g)

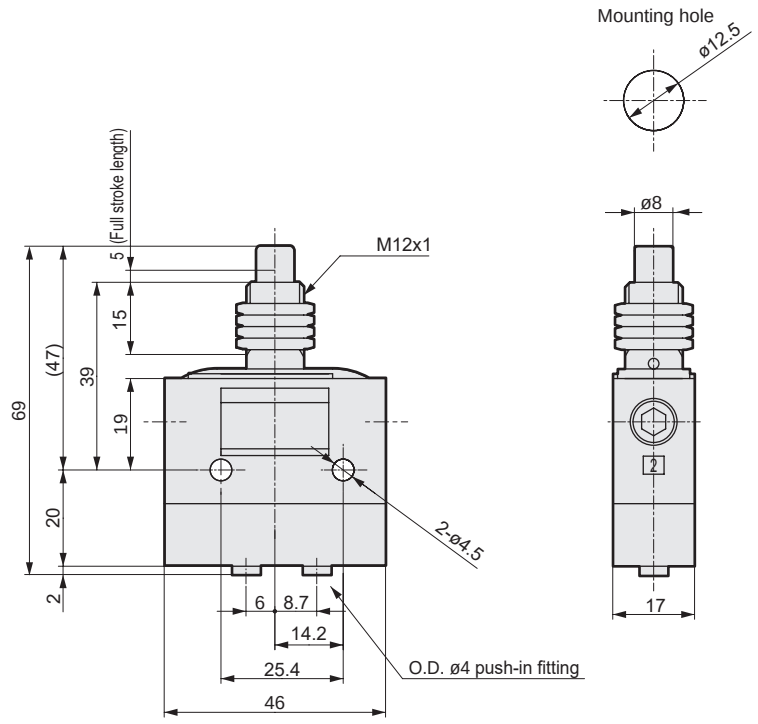

Dimensions: Toggle switch (normally closed valve)



JIS symbol

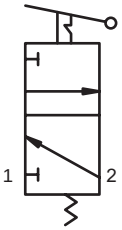

Specifications

Item	MS-00-TG, MS-01-TG
Operating angle	60°

● MS-00-TG Rc1/8 connection (Weight: 140 g)

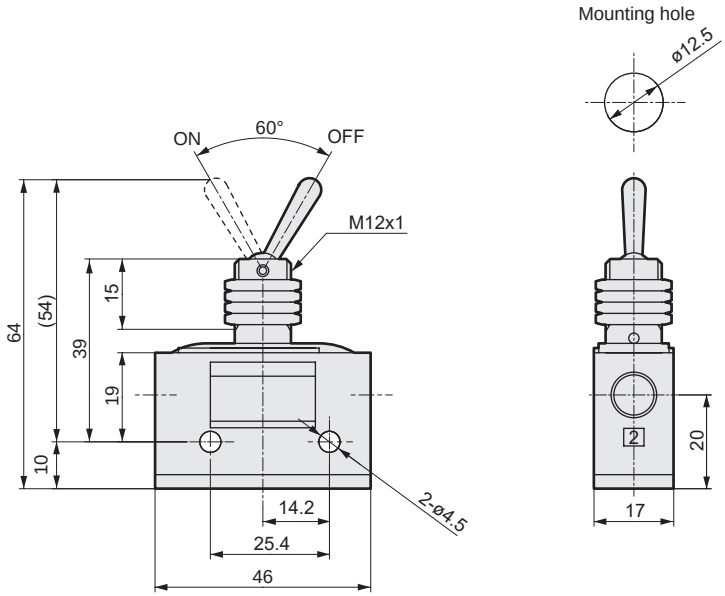

● MS-01-TG Push-in connection (Weight: 190 g)

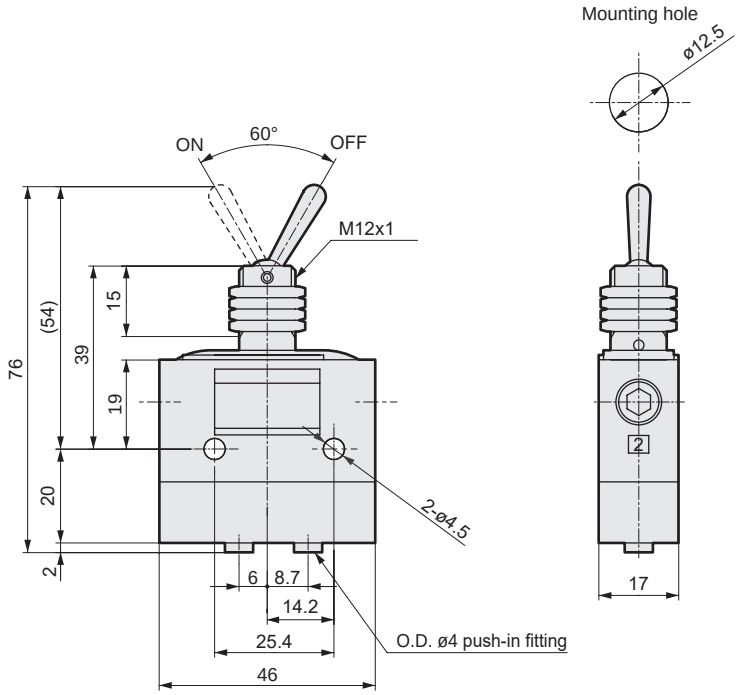

Dimensions: Push button valve (normally closed valve)

CAD



JIS symbol

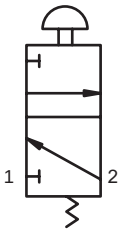

Pushbutton color

Code	Color
Blank	Red
	Green
	Black
Y	Yellow

(Note) 3 types of color chips (R: red, G: green, B: black) are contained. Make a selection depending on the color to be used.

● MS-00-PB1-* Rc1/8 connection (Weight: 180 g)

(* mark indicates push button color.)

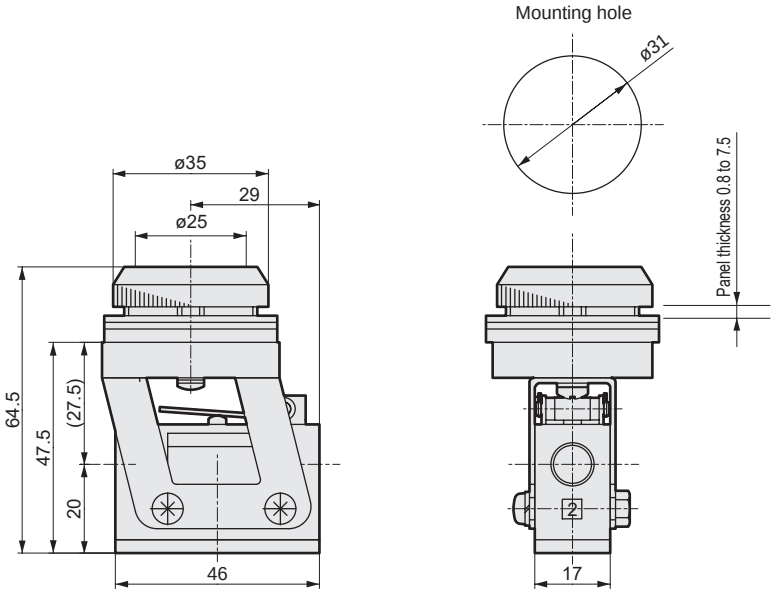

● MS-01-PB1-* Push-in connection (Weight: 230 g)

(* mark indicates push button color.)

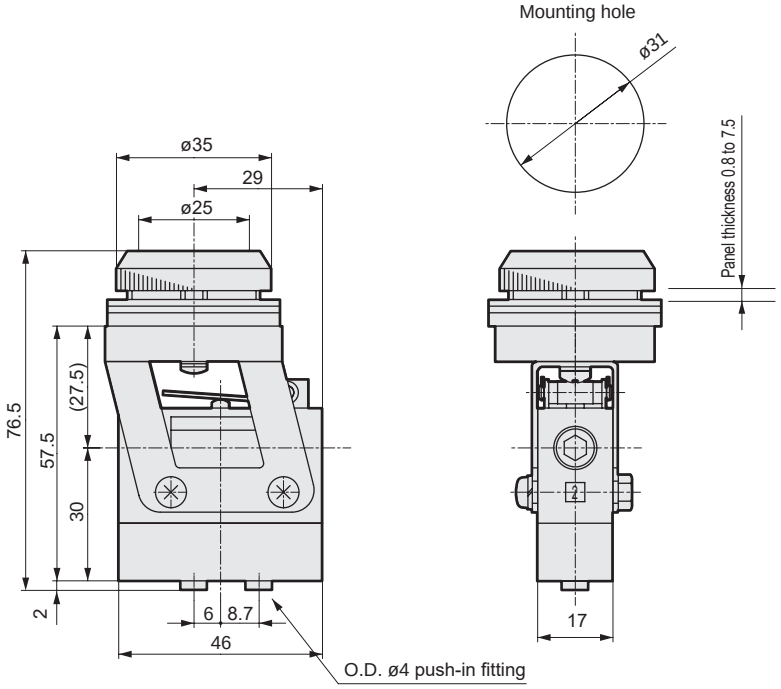

Dimensions: Mushroom valve (normally closed valve)



JIS symbol

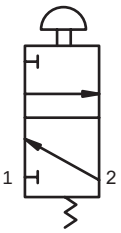

Pushbutton color

Code	Color
R	Red
G	Green
B	Black
Y	Yellow

● MS-00-ESP-* Rc1/8 connection (Weight: 180 g)

(* mark indicates push button color.)

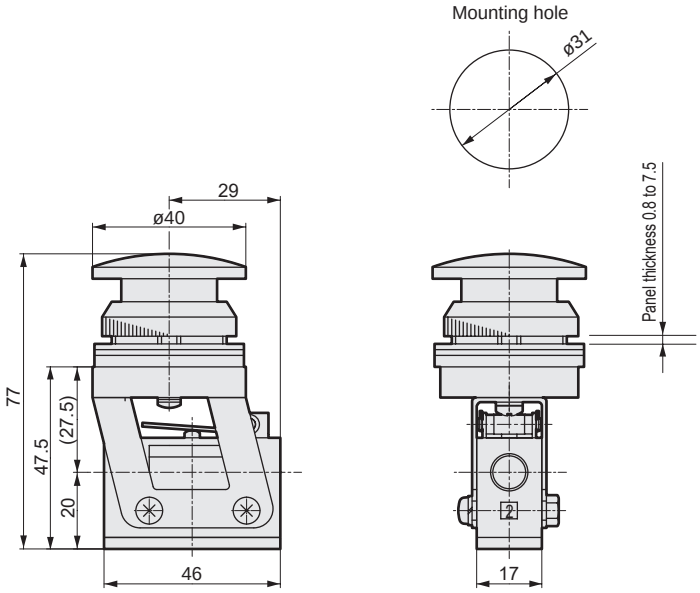

● MS-01-ESP-* Push-in connection (Weight: 230 g)

(* mark indicates push button color.)

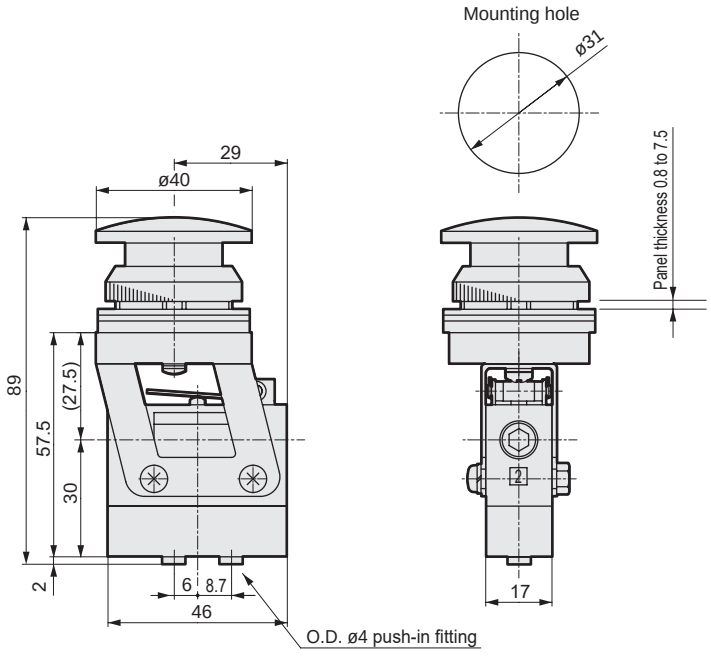

Dimensions: Select valve (normally closed valve)

CAD



JIS symbol

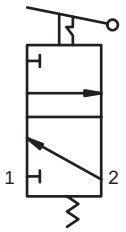

Specifications

Item	MS-00-SE1,MS-01-SE1
Operating angle	90°
Knob color	Black

● MS-00-SE1 Rc1/8 connection (Weight: 190 g)

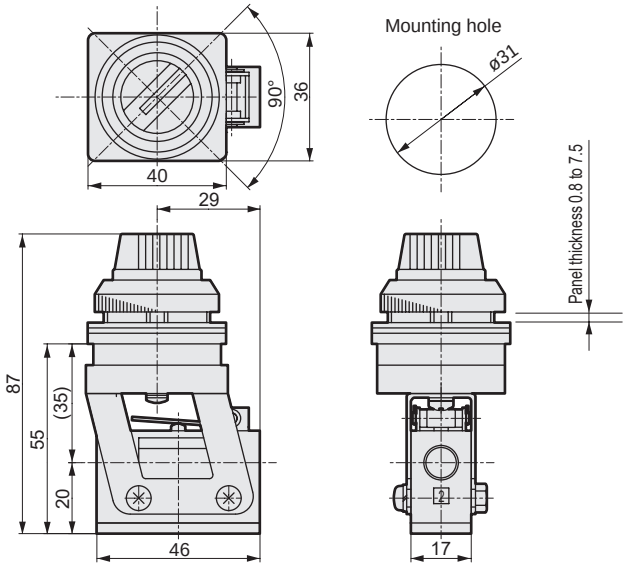

● MS-01-SE1 Push-in connection (Weight: 240 g)

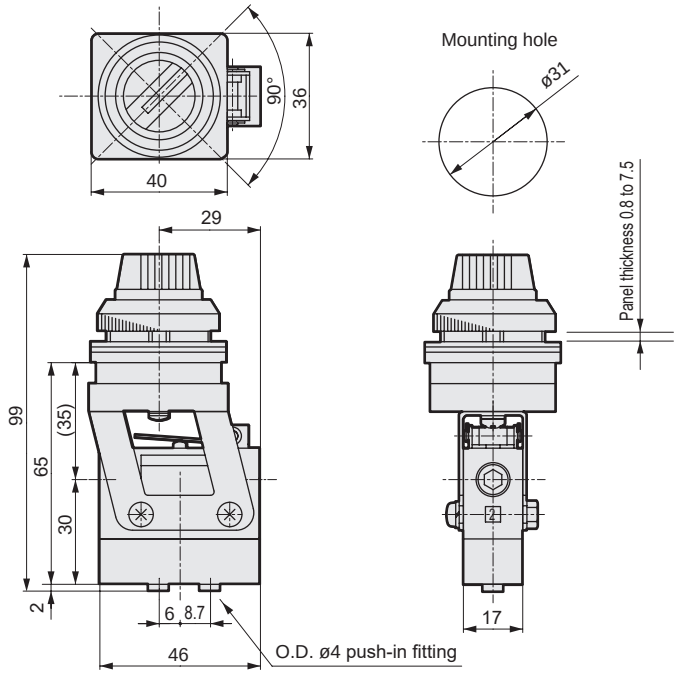

Dimensions: Select valve (2 stations type) 4-way valve



JIS symbol

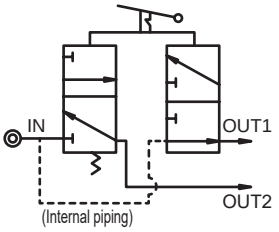

Specifications

Item	MS-40-SE2,MS-41-SE2
Operating angle	90°
Knob color	Black

● MS-40-SE2 Rc1/8 connection (Weight: 350 g)

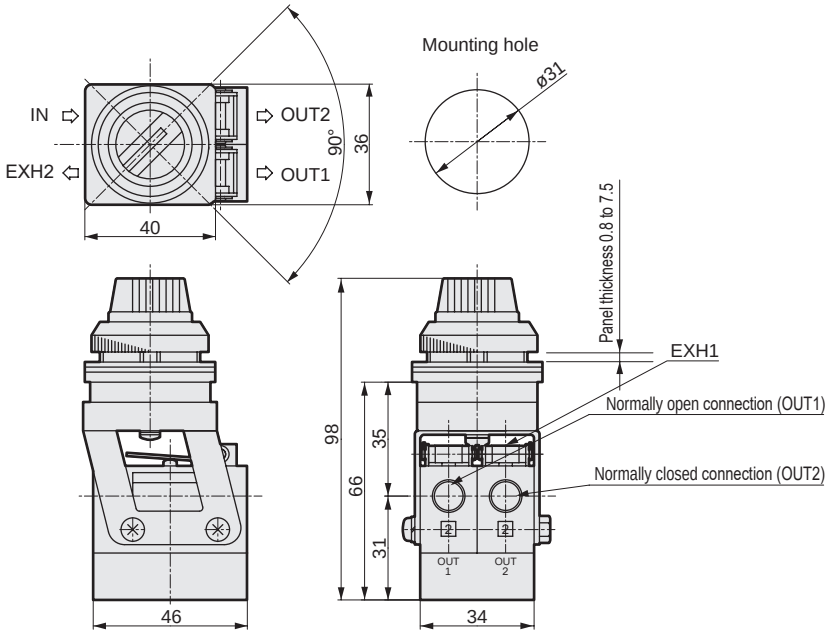

● MS-41-SE2 Push-in connection (Weight: 430 g)

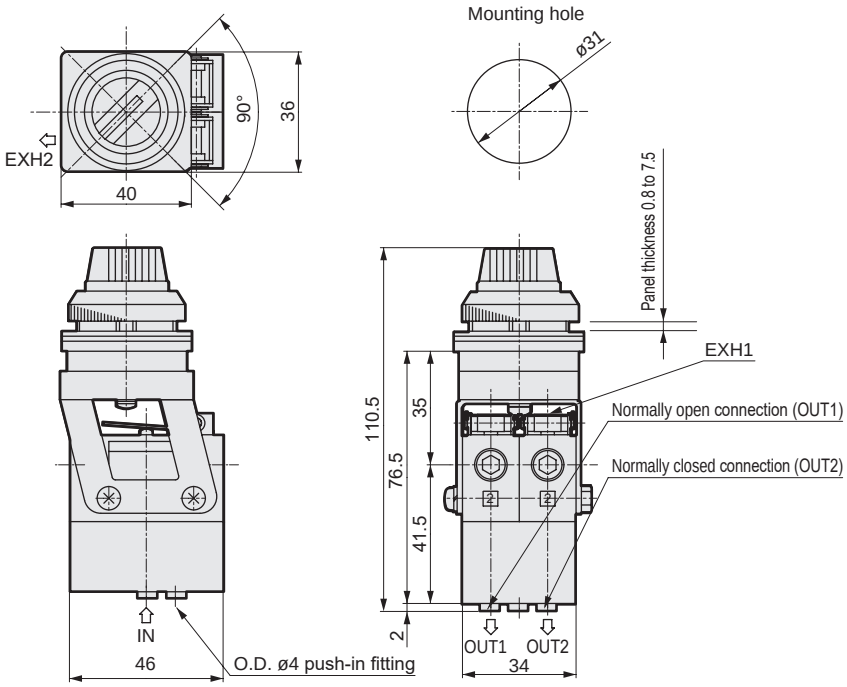

Dimensions: Normally open valve

CAD

JIS symbol

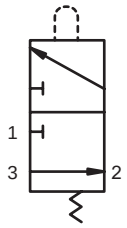



● MS-10-□ Rc1/8 connection
This figure shows MS-10-PP

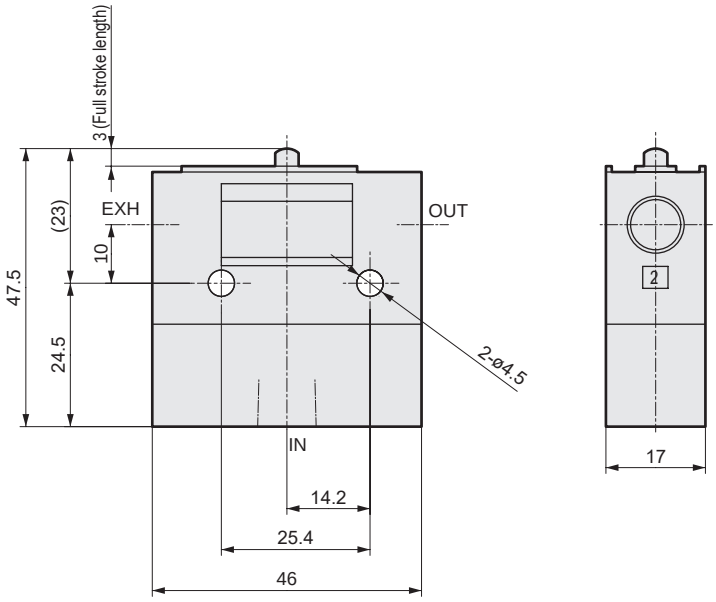

Weight

Model No.	Weight g
MS-10-PP	140
MS-10-RL	150
MS-10-RLOW	160
MS-10-RP	170
MS-10-SP	170
MS-10-TG	170
MS-10-PB1	210
MS-10-ESP	210
MS-10-SE1	220

Dimensions: Normally open valve

CAD



JIS symbol

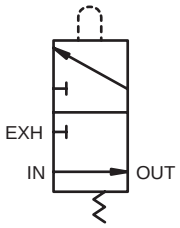

● MS-11-□ Quick connection
This figure shows MS-11-PP.

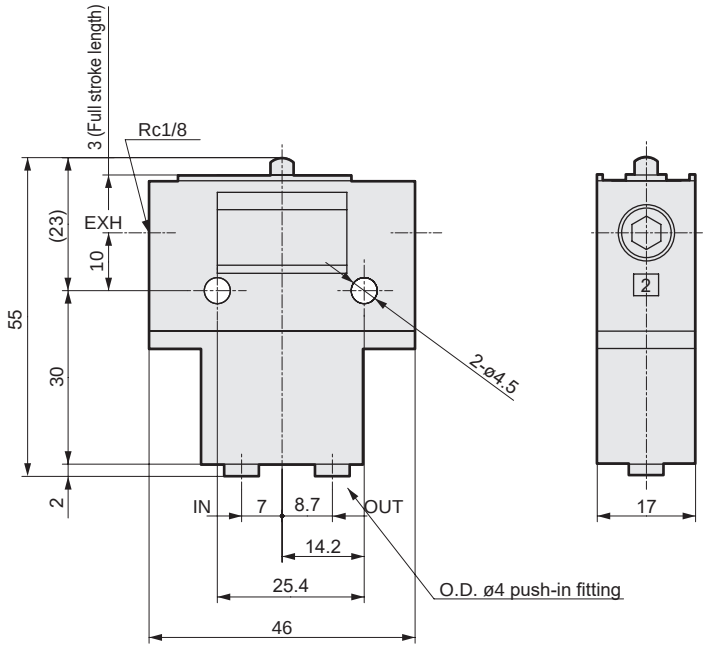

Weight

Model No.	Weight g
MS-11-PP	140
MS-11-RL	150
MS-11-RLOW	160
MS-11-RP	170
MS-11-SP	170
MS-11-TG	170
MS-11-PB1	210
MS-11-ESP	210
MS-11-SE1	220

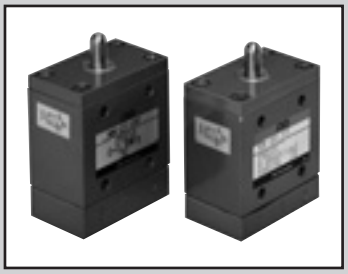

Medium mechanical valve

MM Series

This medium size 3-way valve for pneumatic control is equivalent to a compact limit switch for electric devices and operates with mechanical detection.

● Port size: Rc1/8, ø4

RoHS CAD

Specifications

Item	MM-00 Normally closed	MM-01 Normally closed	MM-10 Normally open	MM-11 Normally open
Working fluid	Compressed air			
Valve structure	Poppet valve			
Min. working pressure MPa	0 (≈0 psi, 0 bar)			
Max. working pressure MPa	0.8 (≈120 psi, 8 bar)			
Proof pressure MPa	1.2 (≈170 psi, 12 bar)			
Port size	Rc1/8	ø4	Rc1/8	ø4
Effective cross-sectional area mm^2	2.5	1.6	2.5	1.6
Ambient temperature °C	5 (41°F) to 60 (140°F)			
Fluid temperature °C	5 (41°F) to 60 (140°F)			

Note: A normally open valve is a custom order product.

How to order

MM - 0 0 - PP

Ⓐ Pressurization

Ⓑ Connection port

Ⓒ Operation actuator

Code	Description
Ⓐ Pressurization	
0	Normally closed valve
1	Normally open valve (custom order product)
Ⓑ Connection port	
0	Rc1/8 thread
1	Push-in fitting ø4
Ⓒ Operation actuator	
PP	Pin plunger
RA	Roller arm
RAA	Adjusting roller lever
RAB	Roller lever
RAC	Roller lever
RAD	Rod lever
RAE	Wire lever
RAF	Spring rod

Piping connection method

For piping connection, either taper female pipe thread Rc1/8 or quick connection for an O.D. ø4 tube is selected based on the application.

● MM-00

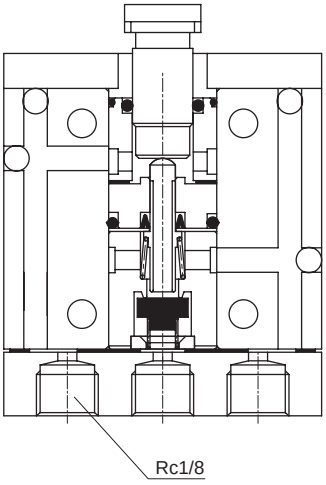

● MM-01

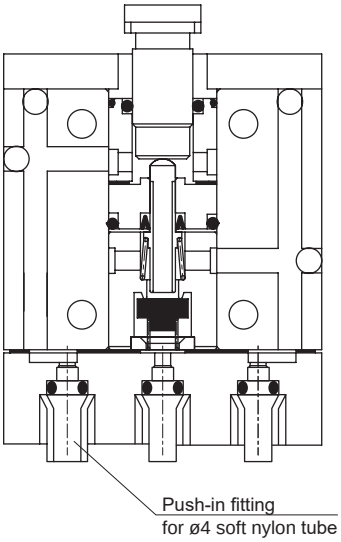

MM-00 is a taper female pipe thread Rc1/8 connection.
· General purpose connection is possible.
· Larger flow rate than MM-01.

MM-01 is a push-in fitting for O.D. ø4 soft nylon.
· Connection is made by simply inserting a soft nylon tube, so piping time is reduced significantly.
· Connecting bracket is not required. Therefore, there is no need to consider the extra space for a bracket.

Operational explanation drawing

Not operating

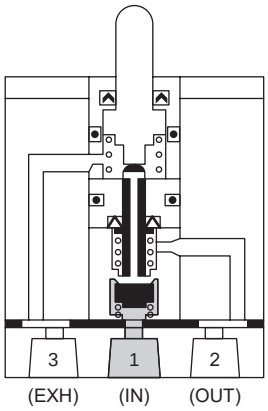

Operating

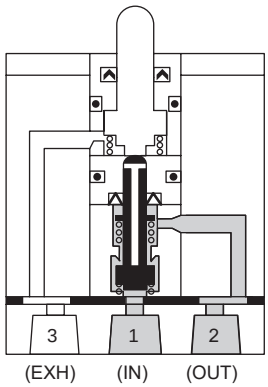

Note) Pressurization from ports other than the IN (1) port is not possible.

Internal structure and parts list

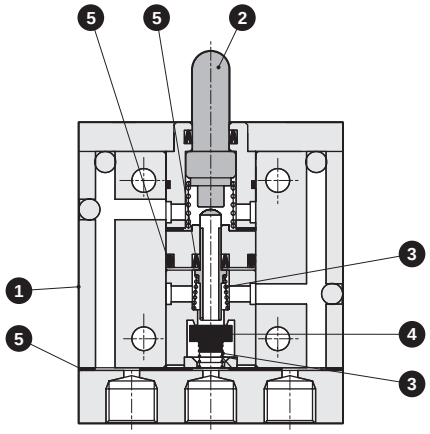

No.	Part	Material
1	Body	Aluminum alloy
2	Spool	Stainless steel
3	Spring	Stainless steel
4	Valve	Nitrile rubber
5	Gasket	Nitrile rubber

Dimensions: Pin plunger (normally closed valve)



JIS symbol

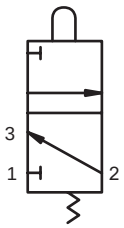

Specifications

Operation code	MM-00-PP,MM-01-PP
O.F	25.5 N (when pressurized at 0.49 MPa)
P.T	1.2 mm
O.T	1.8 mm
T.T	3 mm

Refer to page 1942 for the actuator operation code.

● MM-00-PP Rc1/8 connection (Weight: 230 g)

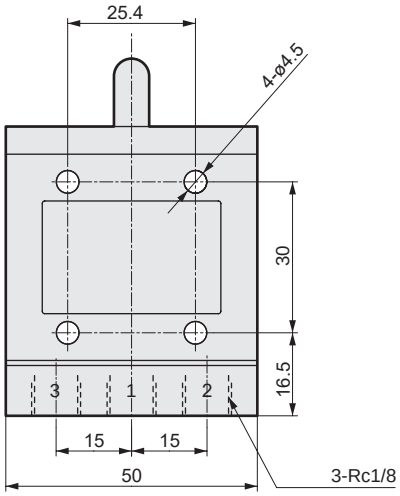

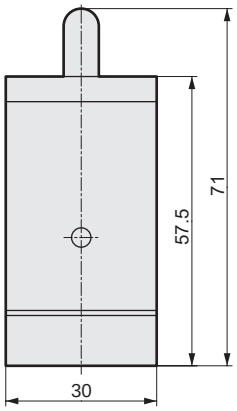

● MM-01-PP Push-in connection (Weight: 260 g)

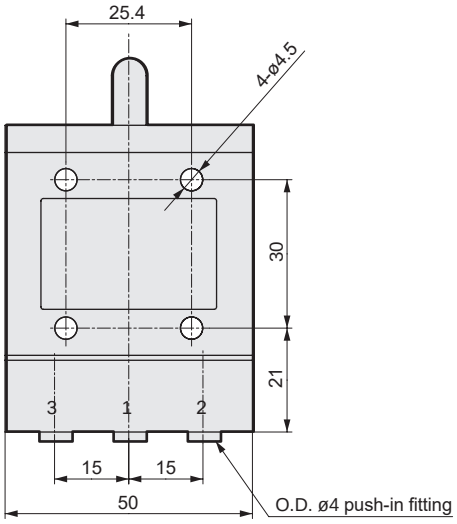

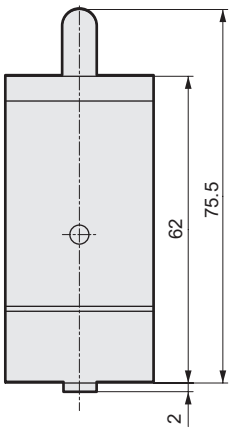

Dimensions: Roller arm (normally closed valve)



JIS symbol

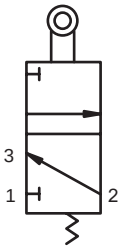

Specifications

Operation code	MM-00-RA,MM-01-RA
O.F	39.2 N·cm (when pressurized at 0.49 MPa)
P.T	20°
O.T	30°
T.T	50°

Refer to page 1942 for the actuator operation code.

● MM-00-RA Rc1/8 connection (Weight: 290 g)

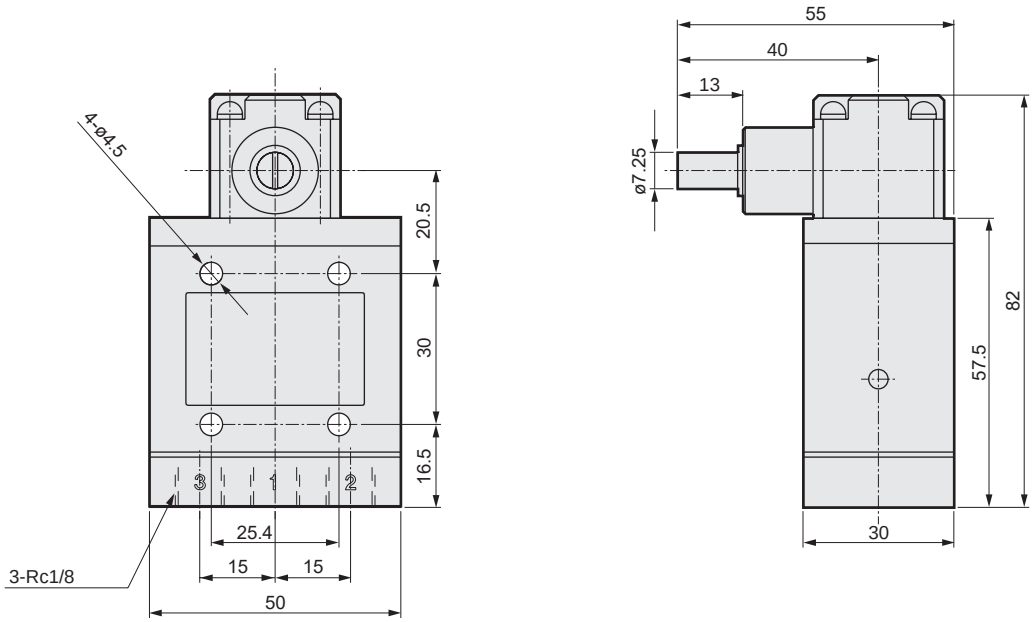

● MM-01-RA Push-in connection (Weight: 330 g)

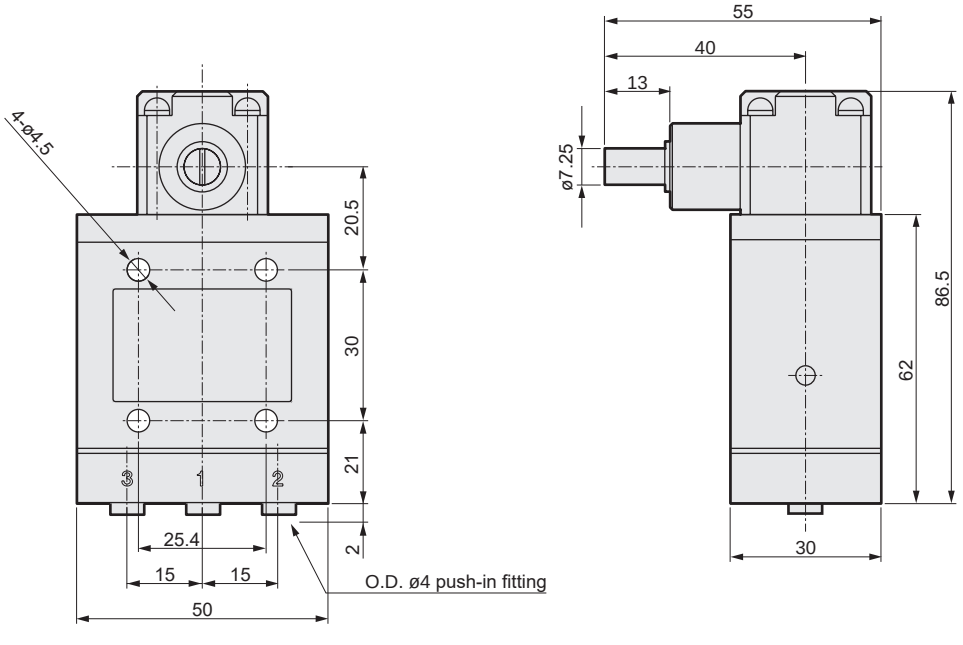

Dimensions: Adjusting roller lever (normally closed valve)

CAD



JIS symbol

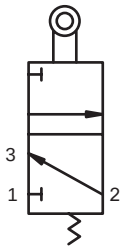

Specifications

Operation code	MM-00-RAA,MM-01-RAA
O.F	4.5 N (when pressurized at 0.49 MPa)
P.T	20°
O.T	30°
T.T	50°

Refer to page 1942 for the actuator operation code.

● MM-00-RAA Rc1/8 connection (Weight: 350 g)

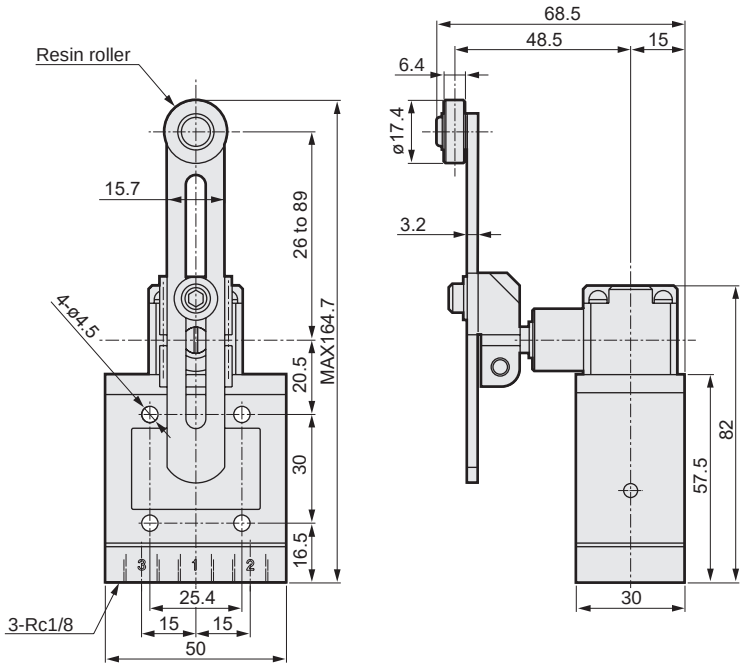

● MM-01-RAA Push-in connection (Weight: 380 g)

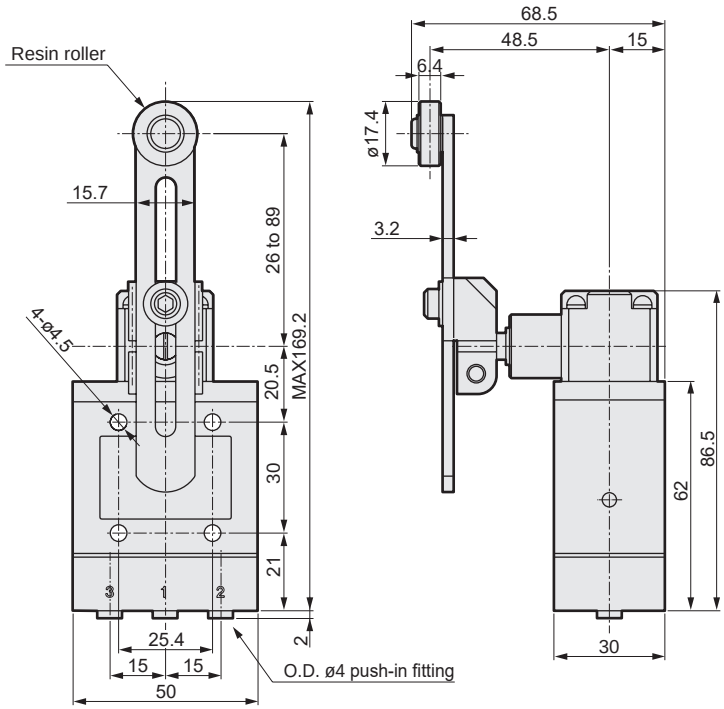

Dimensions: Roller lever (normally closed valve)



JIS symbol

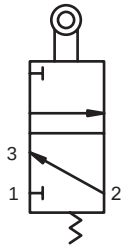

Specifications

Operation code	MM-00-RAB,MM-01-RAB
O.F	9.8 N (when pressurized at 0.49 MPa)
P.T	20°
O.T	30°
T.T	50°

Refer to page 1942 for the actuator operation code.

* The arm fixing method differs from the RAC.

● MM-00-RAB Rc1/8 connection (Weight: 320 g)

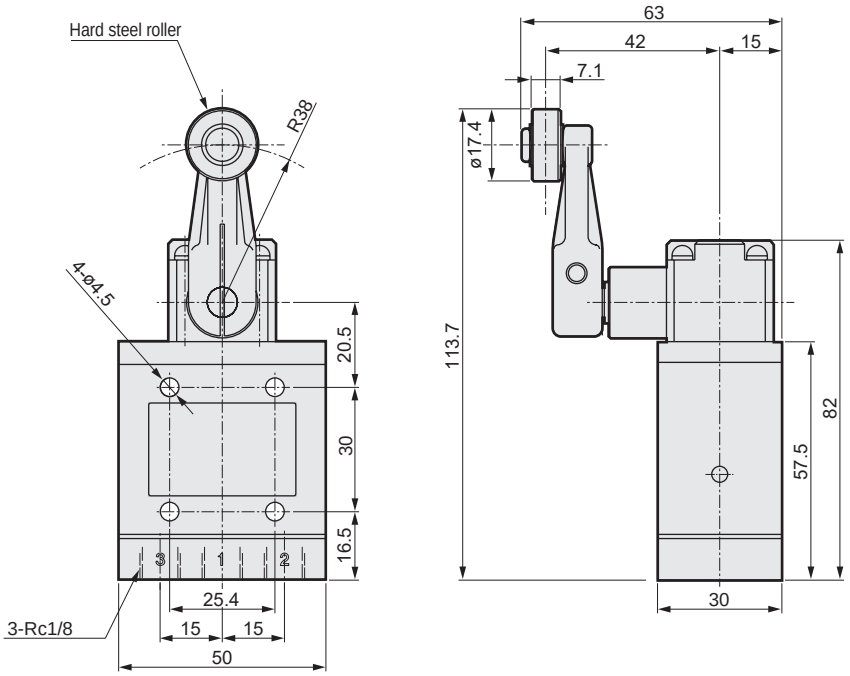

● MM-01-RAB Push-in connection (Weight: 350 g)

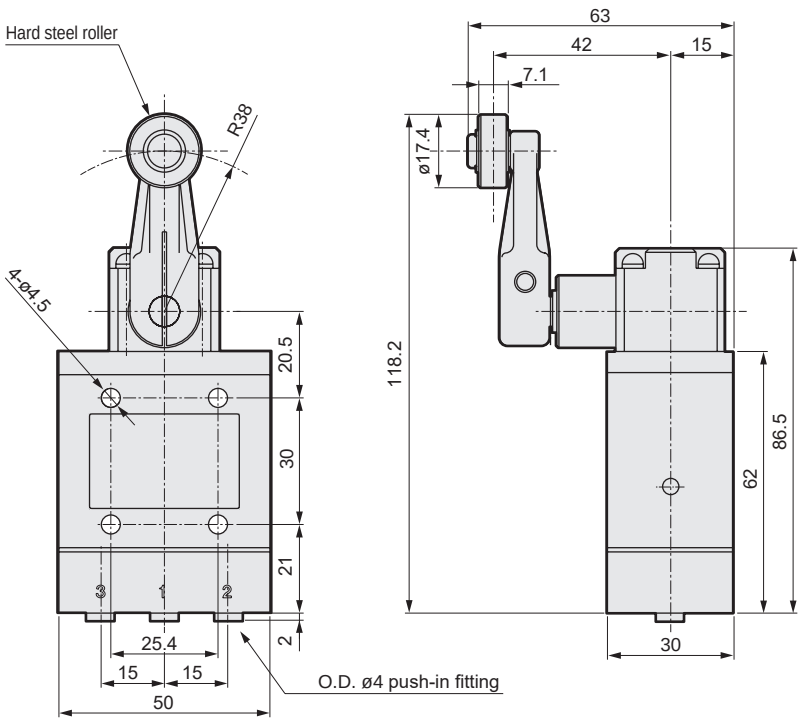

Dimensions: Roller lever (normally closed valve)



JIS symbol

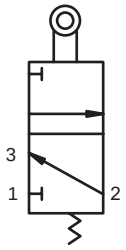

Specifications

Operation code	MM-00-RAC,MM-01-RAC
O.F	9.8 N (when pressurized at 0.49 MPa)
P.T	20°
O.T	30°
T.T	50°

Refer to page 1942 for the actuator operation code.

* The arm fixing method differs from the RAB.

● MM-00-RAC Rc1/8 connection (Weight: 320 g)

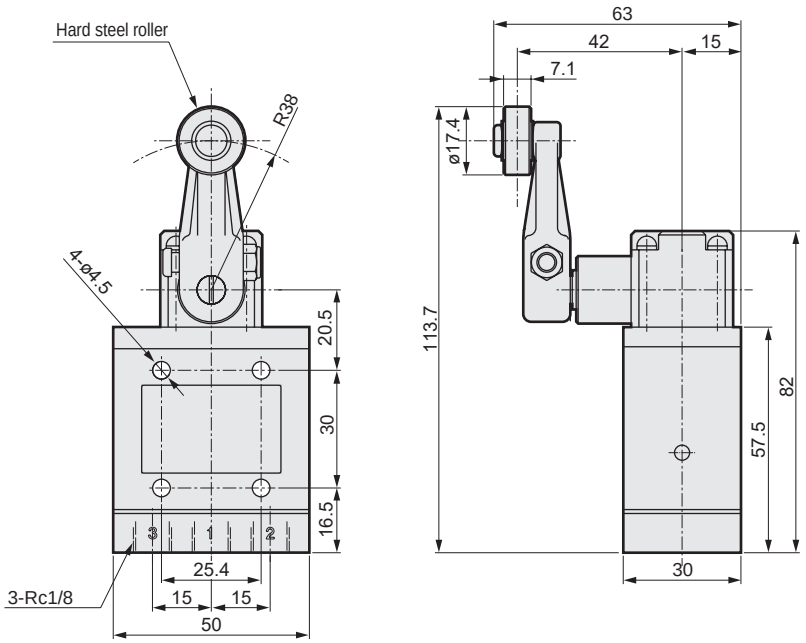

● MM-01-RAC Push-in connection (Weight: 350 g)

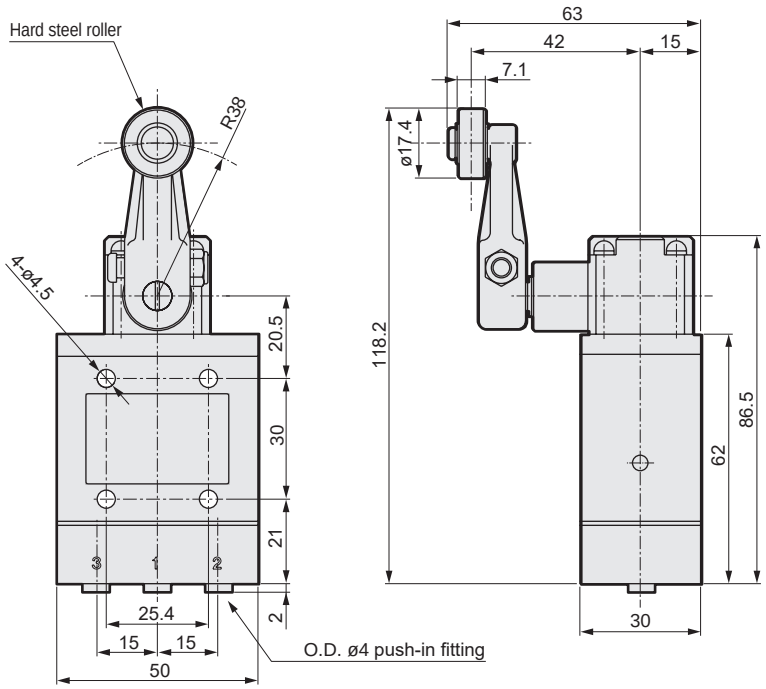

Dimensions: Rod lever (normally closed valve)



JIS symbol

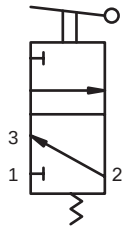

Specifications

Operation code	MM-00-RAD,MM-01-RAD
O.F	2.8 N (when pressurized at 0.49 MPa)
P.T	20°
O.T	30°
T.T	50°

Refer to page 1942 for the actuator operation code.

● MM-00-RAD Rc1/8 connection (Weight: 320 g)

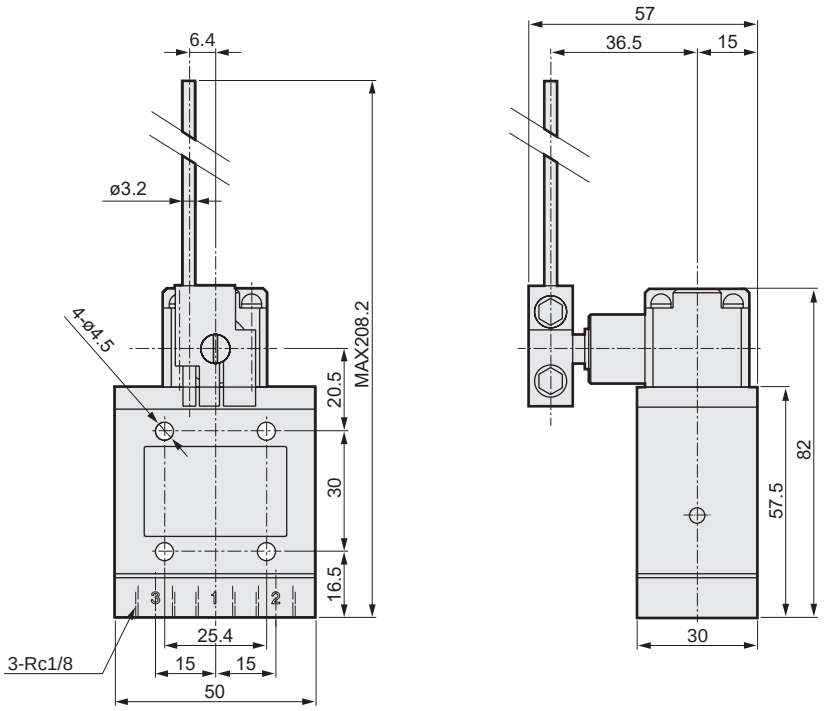

● MM-01-RAD Push-in connection (Weight: 350 g)

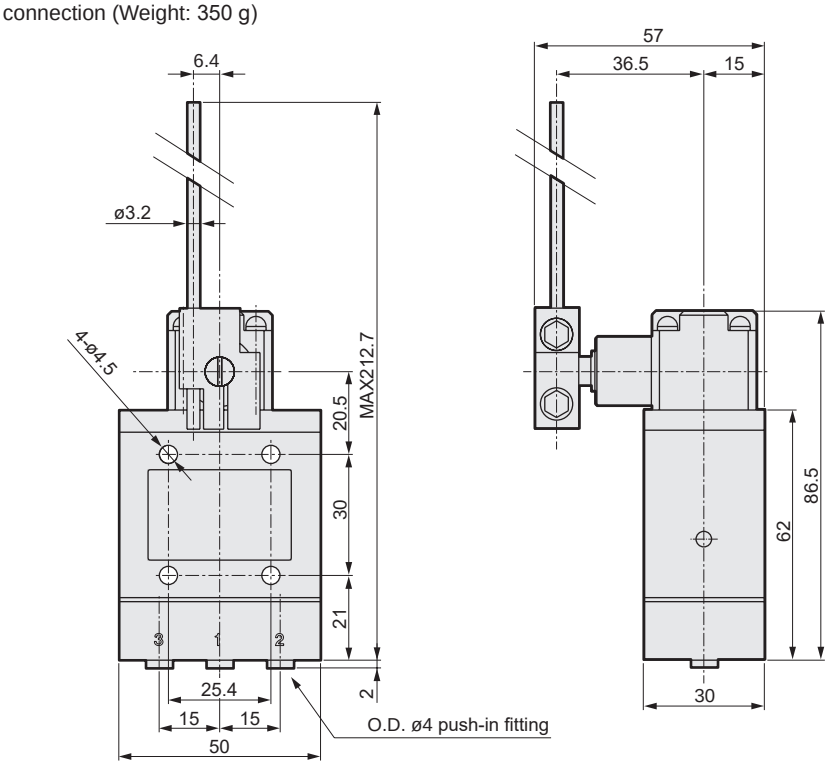

Dimensions: Wire lever (normally closed valve)

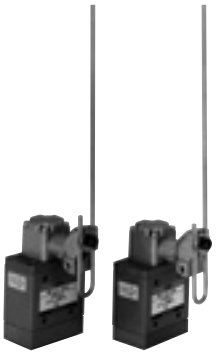

JIS symbol

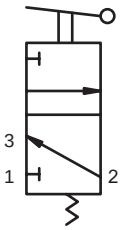

Specifications

Operation code	MM-00-RAE,MM-01-RAE
O.F	1.3 N (when pressurized at 0.49 MPa)
P.T	20°
O.T	30°
T.T	50°

Refer to page 1942 for the actuator operation code.

● MM-00-RAE Rc1/8 connection (Weight: 340 g)

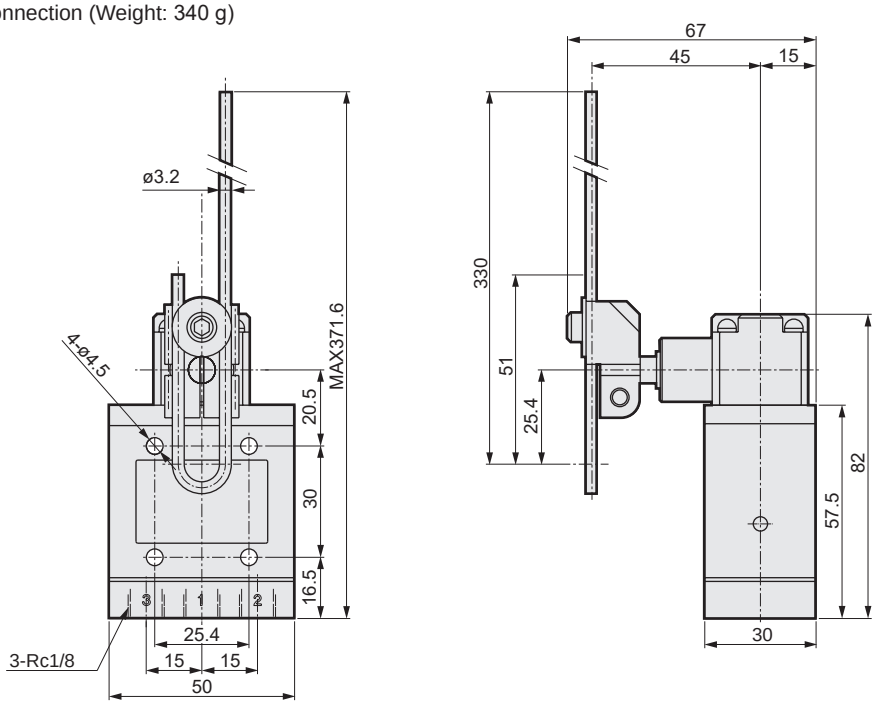

● MM-01-RAE Push-in connection (Weight: 370 g)

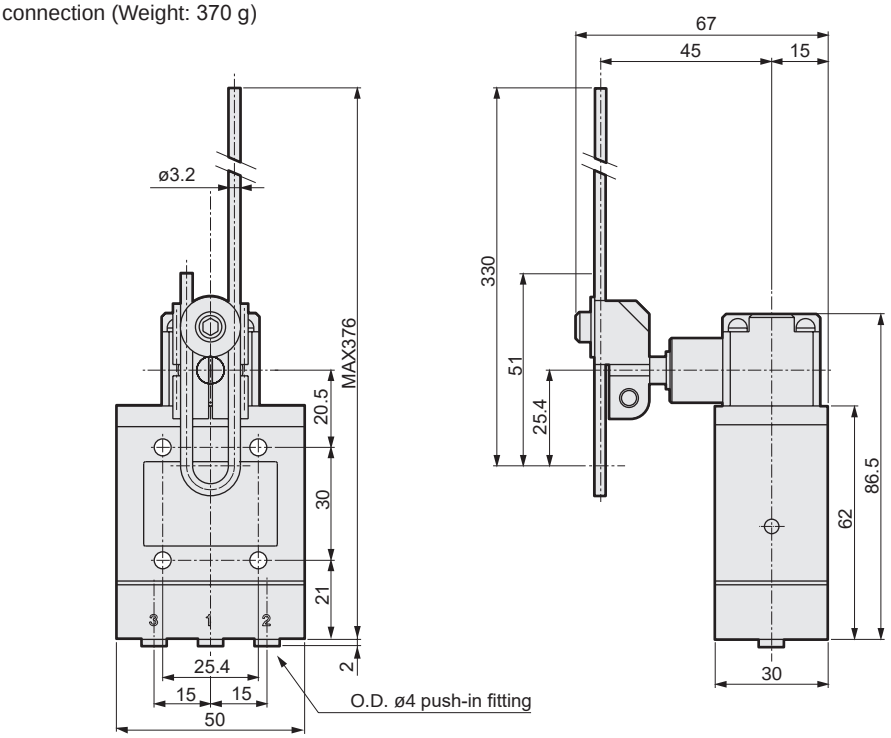

Dimensions: Spring rod (normally closed valve)



JIS symbol

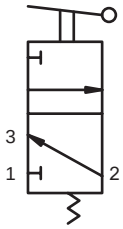

Specifications

Operation code	MM-00-RAF,MM-01-RAF
O.F	1.5 N (when pressurized at 0.49 MPa)
P.T	30°
O.T	20°
T.T	50°

Refer to page 1942 for the actuator operation code.

● MM-00-RAF Rc1/8 connection (Weight: 330 g)

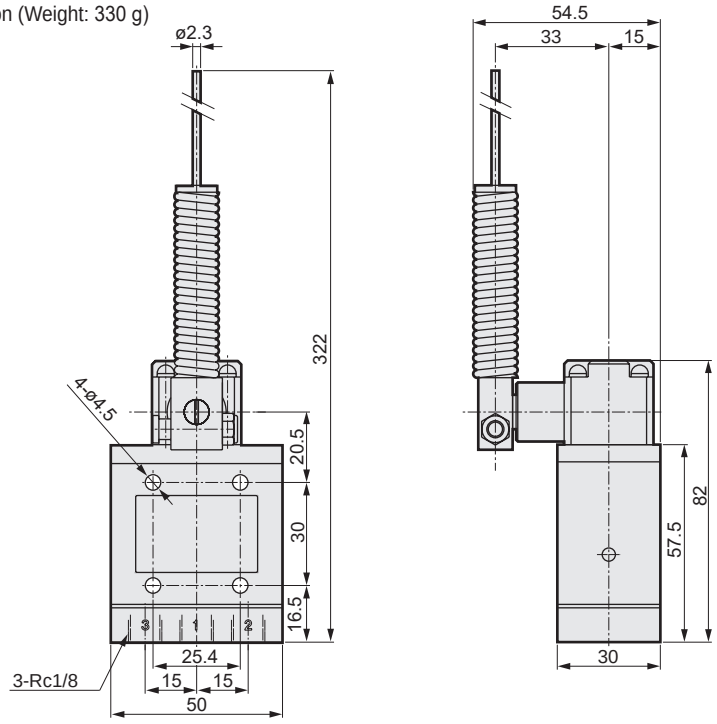

● MM-01-RAF Push-in connection (Weight: 360 g)

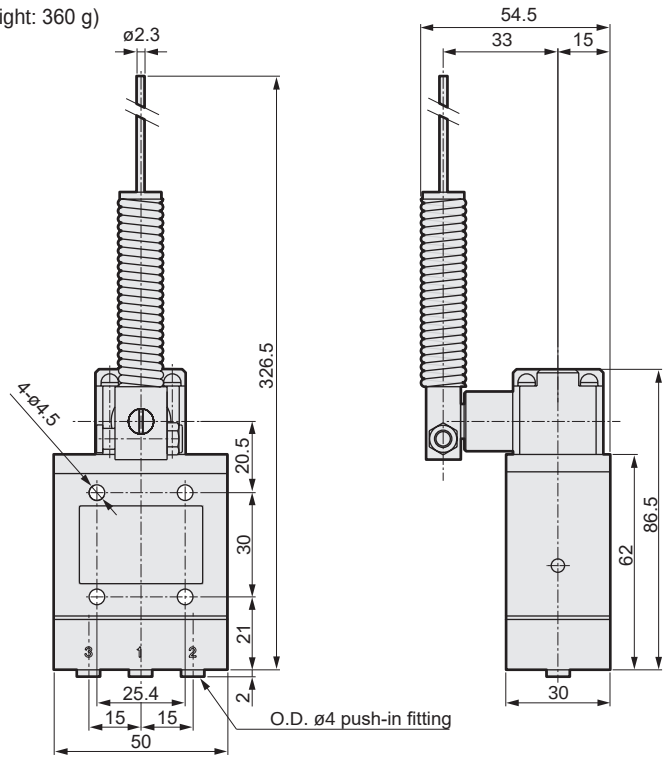

Dimensions: Normally open valve

CAD



JIS symbol

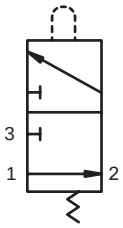

● MM-10-□ Rc1/8 connection
This figure shows MM-10-PP

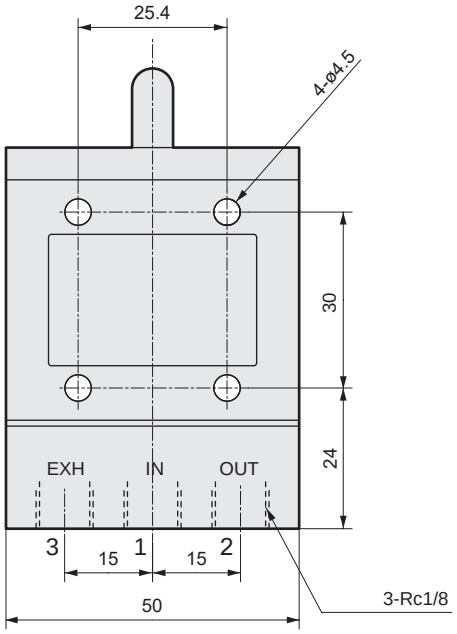

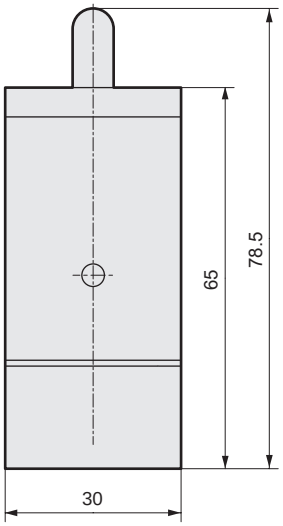

Weight

Model No.	Weight g
MM-10-PP	270
MM-10-RA	330
MM-10-RAA	390
MM-10-RAB	360
MM-10-RAC	360
MM-10-RAD	360
MM-10-RAE	380
MM-10-RAF	370

Dimensions: Normally open valve



JIS symbol

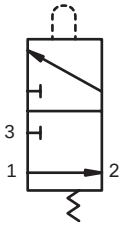

● MM-11-□ Quick connection
This figure shows MM-11-PP.

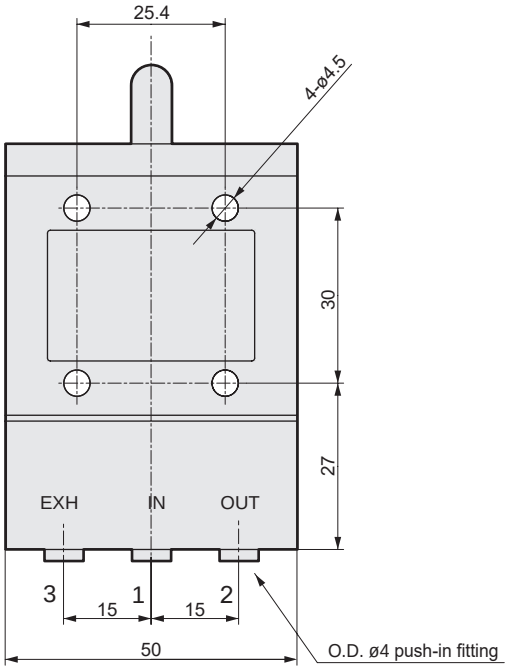

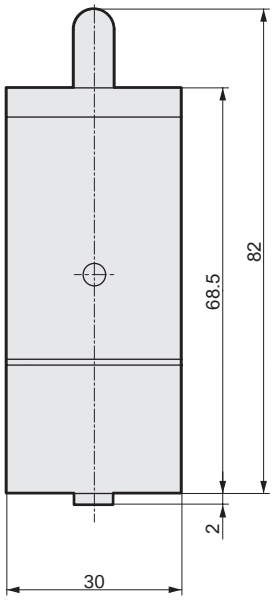

Weight

Model No.	Weight g
MM-11-PP	300
MM-11-RA	360
MM-11-RAA	420
MM-11-RAB	390
MM-11-RAC	390
MM-11-RAD	390
MM-11-RAE	410
MM-11-RAF	400



Large mechanical valve

MAVL Series

This medium size 3-way valve for pneumatic control is equivalent to a vertical limit switch for electric devices and operates with mechanical detection.

● Port size: Rc1/4

Specifications

Item	MAVL Universal
Working fluid	Compressed air
Valve structure	Poppet valve
Min. working pressure MPa	0 (≈0 psi, 0 bar)
Max. working pressure MPa	1.0 (≈150 psi, 10 bar)
Proof pressure MPa	1.5 (≈220 psi, 15 bar)
Port size	Rc1/4
Effective cross-sectional area mm^2	31
Ambient temperature °C	5 (41°F) to 60 (140°F)
Fluid temperature °C	5 (41°F) to 60 (140°F)

Operational explanation drawing

Not operating

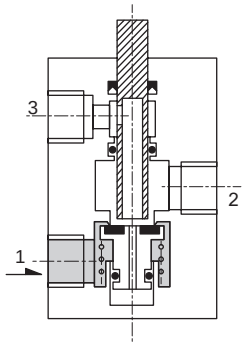

Operating

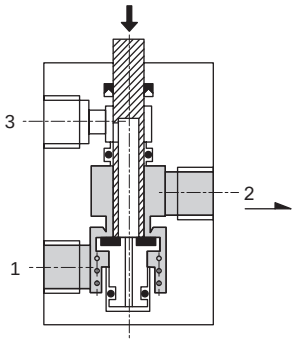

(Content of 3 directions pressurization)
(Applications)

1. Normally closed valve
   Port 1 IN Port 2 OUT Port 3 EXH
2. Normally open valve
   Port 1 EXH Port 2 OUT Port 3 IN
3. Distributor valve
   Port 1 OUT Port 2 IN Port 3 OUT

Internal structure and parts list

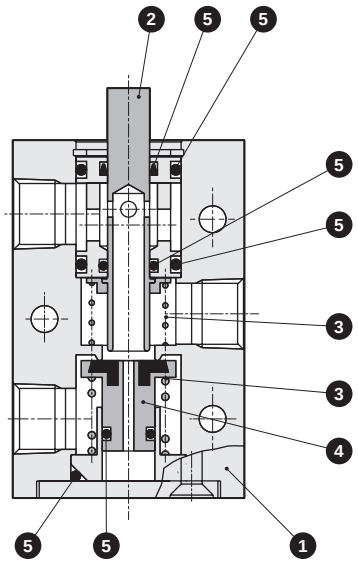

No.	Part	Material
1	Body	Aluminum alloy
2	Spool	Stainless steel
3	Spring	Stainless steel
4	Valve	Nitrile rubber + copper alloy
5	Gasket	Nitrile rubber

Dimensions: Pin plunger (normally closed/normally open)



JIS symbol

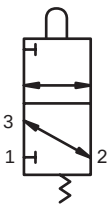

Specifications

Operation code	MAVL-PP
O.F	51.0 N (when NC is pressurized at 0.49 MPa)
	37.3 N (when NO is pressurized at 0.49 MPa)
P.T	3 mm
O.T	2 mm
T.T	5 mm

Refer to page 1942 for the actuator operation code.

● MAVL-PP (weight: 390 g)

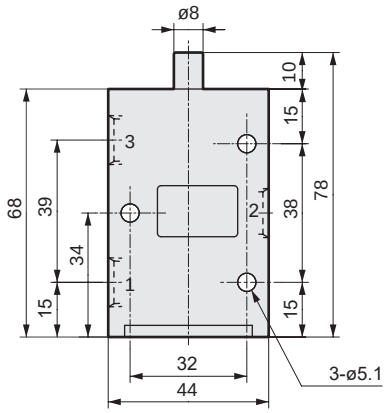

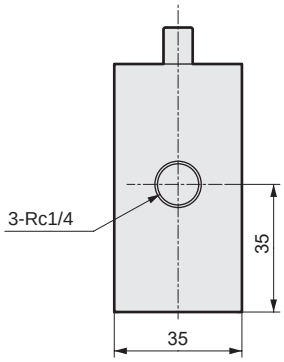

Dimensions: Roller arm (normally closed/normally open)



JIS symbol

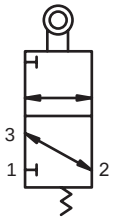

Specifications

Operation code	MAVL-RA
O.F	82.4 N·cm (when NC is pressurized at 0.49 MPa)
	66.7 N·cm (when NO is pressurized at 0.49 MPa)
P.T	25°
O.T	30°
T.T	55°

Refer to page 1942 for the actuator operation code.

● MAVL-RA (weight: 450 g)

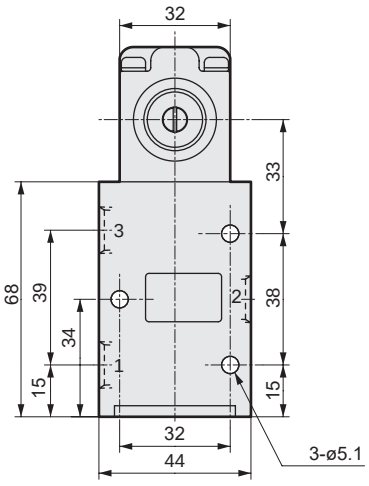

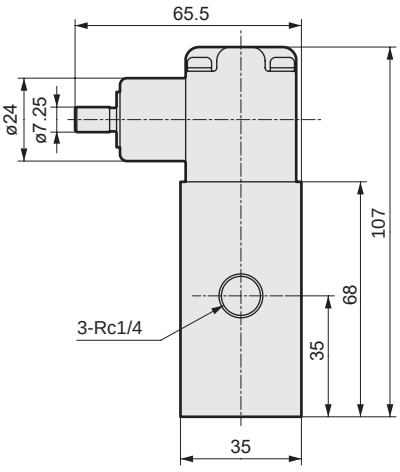

Dimensions: Adjusting roller arm (normally closed/normally open)



JIS symbol

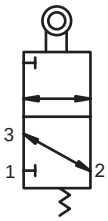

Specifications

Operation code	MAVL-RAA
O.F	9.8 N (when NC is pressurized at 0.49 MPa, arm is at MAX)
	7.9 N (when NO is pressurized at 0.49 MPa, arm is at MAX)
P.T	25°
O.T	30°
T.T	55°
Operation body	Straight cam, low speed cam
	Rotors

Refer to page 1942 for the actuator operation code.

● MAVL-RAA (weight: 510 g)

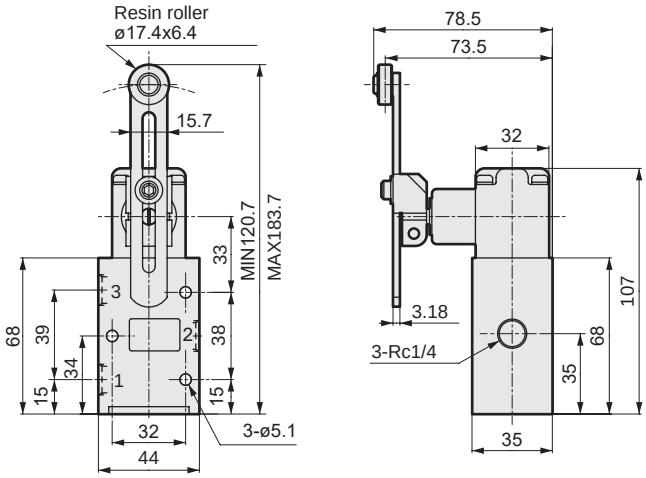

Dimensions: Roller lever (normally closed/normally open)



JIS symbol

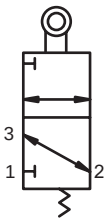

Specifications

Operation code	MAVL-RAB
O.F	21.6 N (when NC is pressurized at 0.49 MPa)
	20.0 N (when NO is pressurized at 0.49 MPa)
P.T	25°
O.T	30°
T.T	55°

* The arm fixing method differs from the RAC.

Refer to page 1942 for the actuator operation code.

● MAVL-RAB (weight: 480 g)

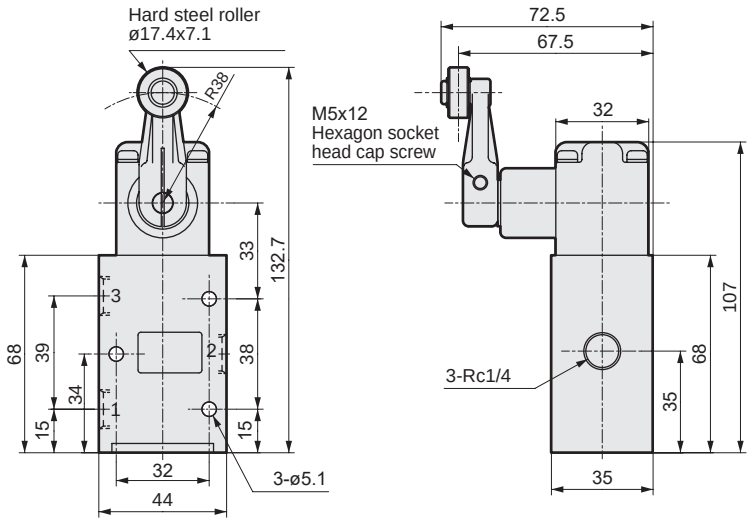

Dimensions: Roller lever (normally closed/normally open)



JIS symbol

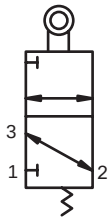

Specifications

Operation code	MAVL-RAC
O.F	21.6 N (when NC is pressurized at 0.49 MPa)
	20.0 N (when NO is pressurized at 0.49 MPa)
P.T	25°
O.T	30°
T.T	55°

* The arm fixing method differs from RAB.

Refer to page 1942 for the actuator operation code.

● MAVL-RAC (weight: 480 g)

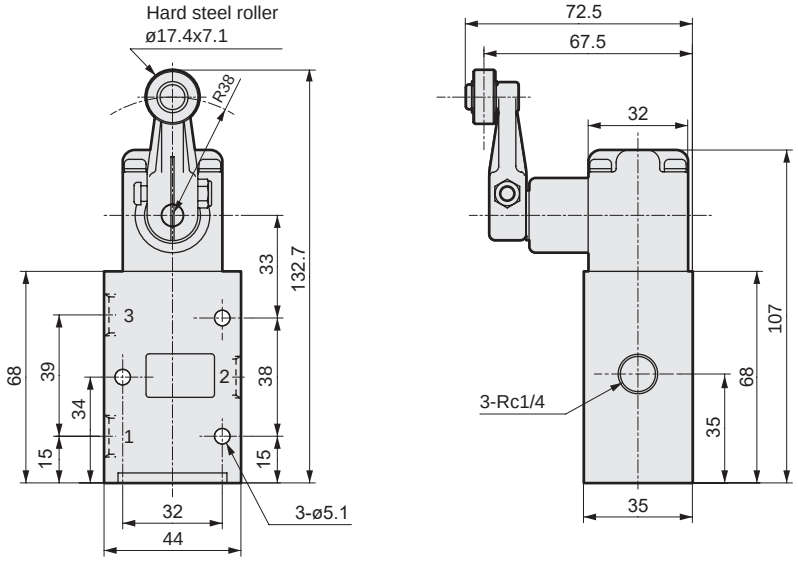

Dimensions: Rod lever (normally closed/normally open)



JIS symbol

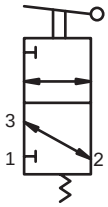

Specifications

Operation code	MAVL-RAD
O.F	4.9 N (when NC is pressurized at 0.49 MPa, arm is at MAX)
	4.0 N (when NO is pressurized at 0.49 MPa, arm is at MAX)
P.T	25°
O.T	30°
T.T	55°

The hard aluminum rod lever can be cut or formed as needed.

Refer to page 1942 for the actuator operation code.

● MAVL-RAD (weight: 480 g)

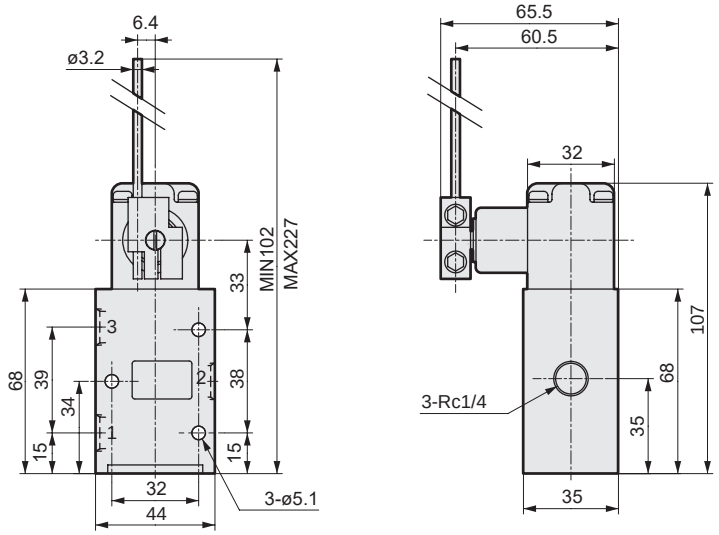

Dimensions: Wire lever (normally closed/normally open)

CAD



JIS symbol

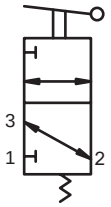

Specifications

Operation code	MAVL-RAE
O.F	1.8 N (when NC is pressurized at 0.49 MPa, arm is at MAX)
	1.2 N (when NO is pressurized at 0.49 MPa, arm is at MAX)
P.T	25°
O.T	30°
T.T	55°

Refer to page 1942 for the actuator operation code.

● MAVL-RAE (weight: 500 g)

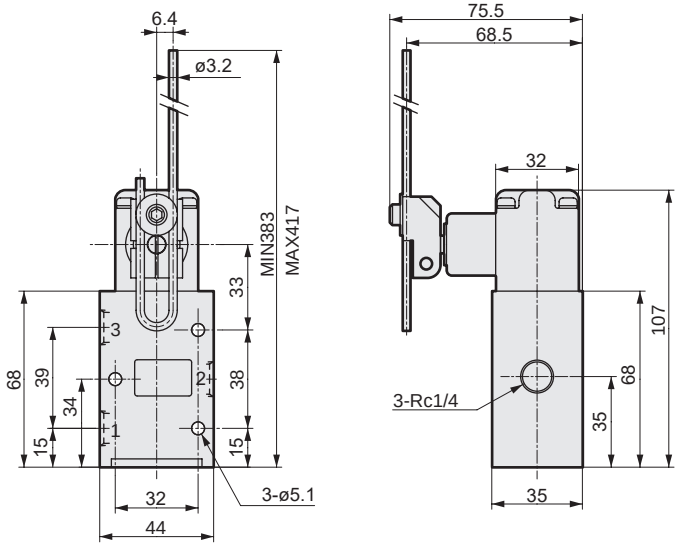

Dimensions: Spring rod (normally closed/normally open)

CAD



JIS symbol

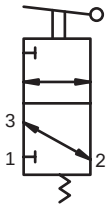

Specifications

Operation code	MAVL-RAF
O.F	3.0 N (when NC is pressurized at 0.49 MPa)
	1.6 N (when NO is pressurized at 0.49 MPa)
P.T	45°
O.T	10°
T.T	55°

Refer to page 1942 for the actuator operation code.

● MAVL-RAF (weight: 490 g)

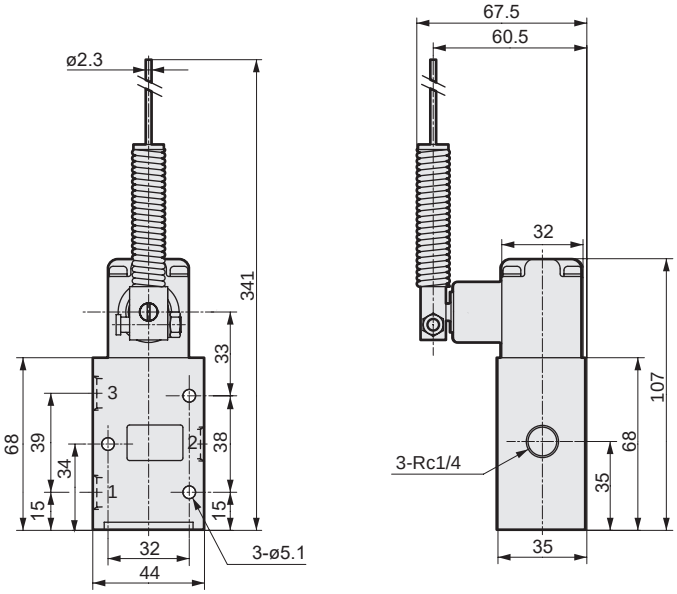

Circuit device (logic valve)

When conducting sequential control by associating several air cylinders, the circuit is assembled with logic valves.
The logic valve is the generic term for small movable fluid control components configuring a circuit.

Logic valve



■ Logic valve

Part name	Model No.	JIS symbol	Page
Air timer	RTD-3A		1938
Pressure switch	PE-1	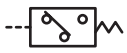	1939
Air lamp	R (red) AL-B (blue) Y (yellow)		1939
Compact air lamp	R (red) SAL- B (blue)		1940

Air timer

RoHS



Specifications

Item	RTD-3A
Working fluid	Compressed air
Working pressure MPa	0.25 (≈36 psi) to 0.8 (≈120 psi)
Pilot pressure MPa	0.25 (≈36 psi) to 0.8 (≈120 psi)
Ambient temperature °C	5 (41°F) to 60 (140°F)
Delay time sec	MAX30
Port	IN port ..... No.1 OUT port ..... No.3 Pilot port No.2
Connection	Push-in
Connection tube	O.D. ø4 nylon tube
Weight g	379

JIS symbol

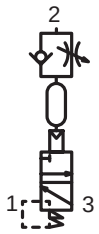

Model No. **RTD – 3A**

Operational explanation

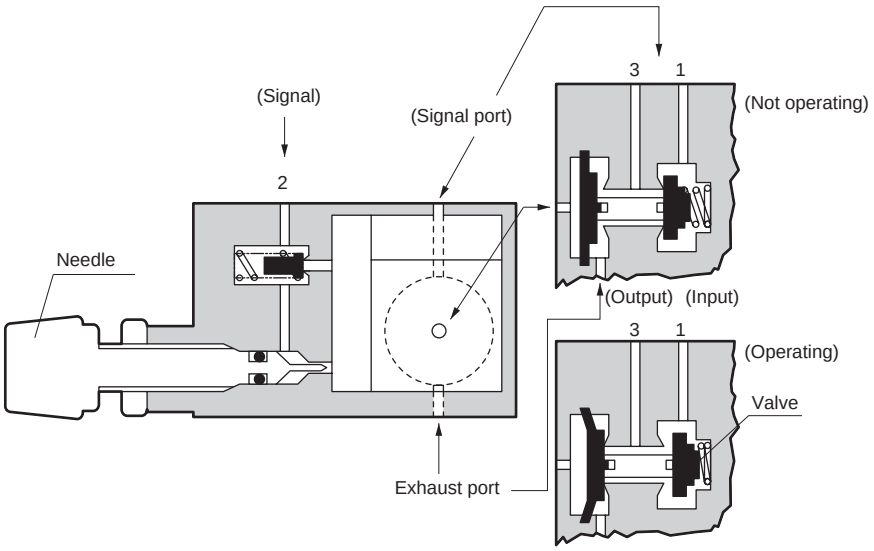

Dimensions

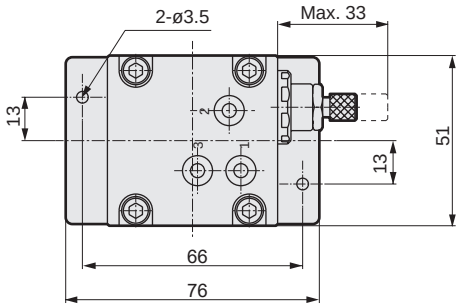

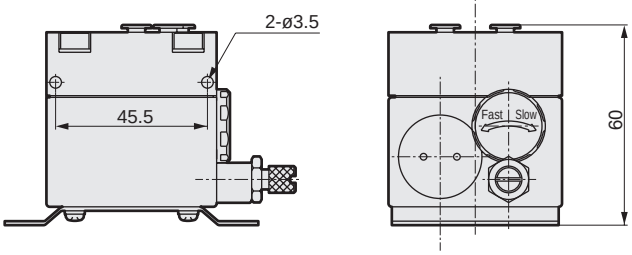

Pressure switch

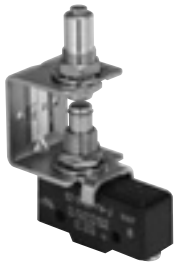

Specifications

1 MPa = 10 bar

Item	PE-1
Working pressure MPa	0.2 (≈29 psi) to 0.7 (≈100 psi)
Electric capacity	15 A or less...125, 250, 480 VAC 0.5 A or less....125 VDC 0.25 A or less...250 VDC
Connection	O.D. ø4 nylon tube Push-in connection
Weight g	102

JIS symbol



Model No.

PE – 1

Dimensions

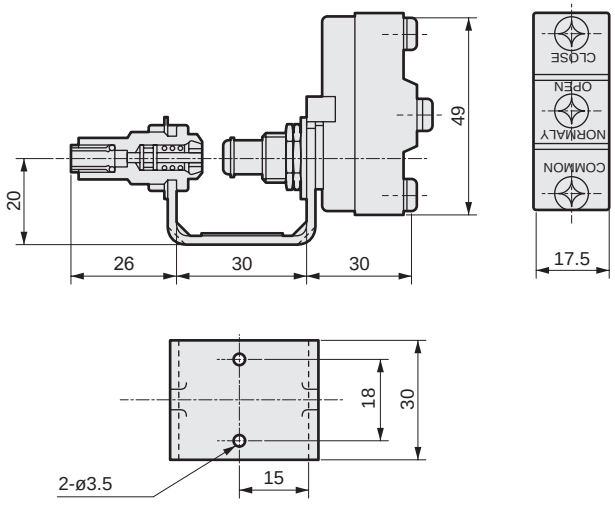

Air lamp



Specifications

1 MPa = 10 bar

Item	AL-R, AL-B, AL-Y
Working pressure MPa	0.05 (≈7.3 psi) to 0.8 (≈120 psi)
Panel	Surface display
Connection	O.D. ø4 nylon tube Push-in connection
Weight g	51

Model No.

AL – R

Display color	
R	Red
B	Blue
Y	Yellow

JIS symbol



Dimensions

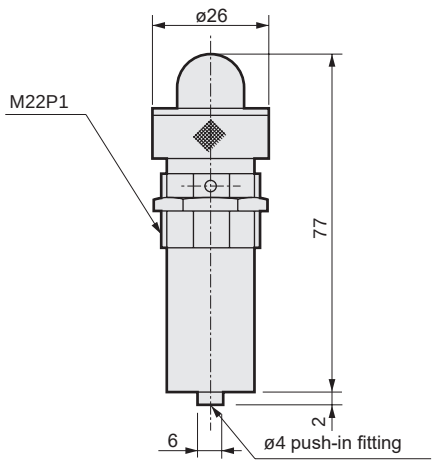

⚠WARNING

Do not attach a pipe wrench, etc., onto the main body (knurled section) and apply excessive force. It could damage the product body.

⚠CAUTION

Do not modify this product. There is a risk of injury and damage.

Compact air lamp

RoHS



Specifications

1 MPa = 10 bar

Item	SAL-R, SAL-B
Working pressure MPa	0.25 (≈36 psi) to 0.8 (≈120 psi)
Connection	Insert into ø4 push-in fitting
Weight g	3.8

Model No.

SAL – R

Display color	
R	Red
B	Blue

JIS symbol



Dimensions

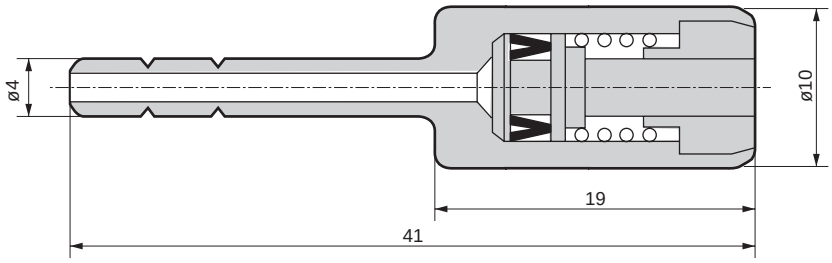

MEMO

Safety Precautions

Be sure to read this section before use.
Refer to Intro Page 59 for precautions for general pneumatic components.

Mounting, installation and adjustment

CAUTION

■ Do not move the component more than the total movement (T.T).

· Actuator operation codes used in the catalog are shown below.

Code	Explanation
O.F	Necessary force for operation
P.T	Action before valve open
O.T	Action after valve open
T.T	Total movement

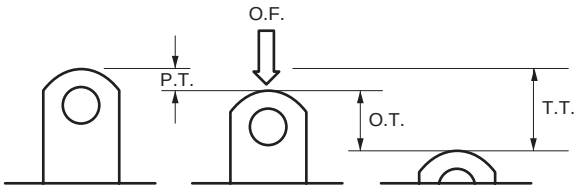

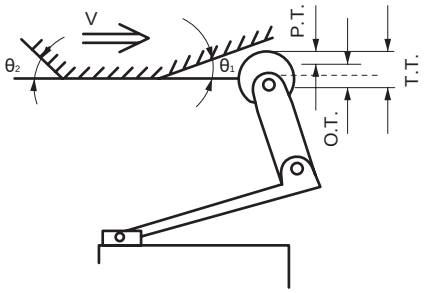

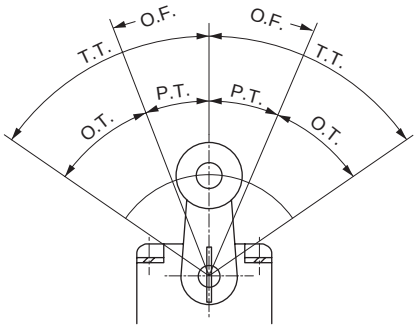

■ Dog

· Set the dog angle θ to 45 degree or less.
· If the dog speed is high, set θ to a small value.
· The dog operation position and depth should be designed to “P.T + O.T/2”.
· Design the cam and dog so that the lever returns gradually.

(1) V ≤ 0.2 m/s

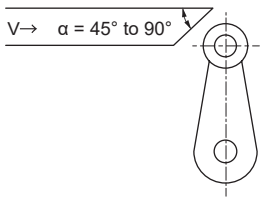

α	Vmax(m/s)
90°	0.05°
75°	0.07°
60°	0.1°
45°	0.2°

Set the arm parallel to the dog’s cut face so that the force is applied at a right angle to the arm. Generally, α = 60° and θ = 30° are desirable for dog design and arm design.

(2) V ≤ 0.1 m/s

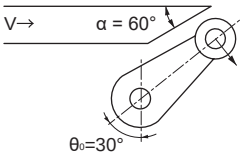

(3) V ≤ 2 m/s

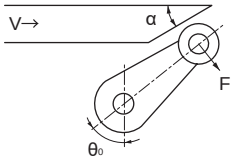

Vmax (max. speed) increases when the angle is reduced. The arm always should be set parallel to the dog’s cut face.

α = 90-θ	Vmax(m/s)
40°	0.7°
35°	0.9°
30°	1.3°
25°	2.0°

(4) When the dog is exceeded (V≤0.2 m/s)

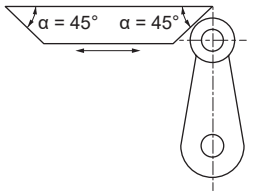

Set the arm perpendicularly so that α = 45°.
V ≤ 0.2 m/s is preferred.

■ Do not use the mechanical valve body as a mechanical stopper.

■ Do not apply excessive force when operating the toggle switch (MS-*-TG).

Manufacturer

Telepneumatic

Total air control systems

Gamma system

■ Total air systems



CONTENTS

Series variation	1944
Common specifications	1945
● PLC (PS*)	1946
● Relay (PR*/PL*)	1947
● Relay sub-base (PZU)	1948
● Integrated (logic element) (PL*)	1950
● Line type (logic element) (PL*/PZM)	1951
● Air lamp (PXV)	1952
● Element and sensor (PR*/PX*)	1953
● Push button switch/switch body (separated) (PXB-B3)	1954
● Switch head (ZB4-B)	1955
● Miniature limit switch (PXC-M)	1956
● Compact limit switch (PXC-M)	1957
● Limit switch (PXC-K)	1960
● Rotary head lever actuator (ZCK)	1961
● Limit switch	1962
● Accessory (Silencer/chip)	1964

Series variation

Total air control systems (Gamma system)

The Gamma system is a total air system ideal for automating devices that use many pneumatic cylinders. Conditions such as manual override, emergency stop, and interlock are easily added using the step-by-step method modular PLC for designing circuits.
(Refer to Gamma System Technical Manual 1/2 (CT-N-35) for details.)

Product group	Features	Page
● PLC elements 	The modular PLC elements are the core of the Gamma system. These module elements are easily incorporated into a pneumatic sequence circuit and have a memory element in the body and AND and OR elements in the sub-base. ● Main features Cycle display indicator Built-in interlock Manual operation button	Specifications: 1945 1946
● Relay elements 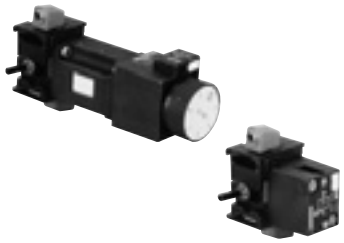	These control elements enable multifunction circuits. ● Diverse product lineup Timer, YES/NOT/AND/OR elements, threshold element, pressure switch, solenoid valve, memory element, booster, amplifier, etc. ● Mount either on a manifold or individually The sub-base can be mounted either individually or on a manifold without having to change its shape.	Specifications: 1945 1946
● Logic elements 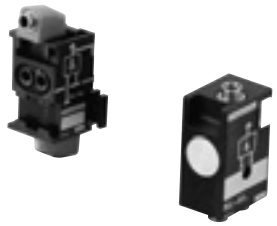	These elements are mainly used when providing several interlocks for operation signals, and are used as a PLC auxiliary circuit arranged on the PLC input or output side. ● Integrated and run types available AND/OR/NOT elements (integrated), AND/OR elements (line type) ● Simple circuit changes possible (integrated) Both cascade and common connections are available by switching selector parts.	Specifications: 1945 1950
● Operation switches and air lamps 	The operation switch elements send signals such as start and stop. The air lamp elements indicate the presence of pneumatic signals. ● Diverse product lineup Select the type ideal for your application. ● Main features Stable snap action with small operating force Push-in fitting for ø4 tube built-in Air counter for pneumatic pulses provided	Specifications: 1945 1952
● Detect elements 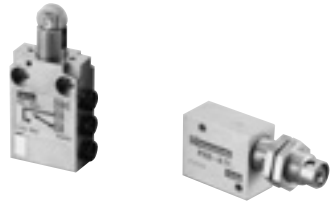	These elements send actuator operation confirmation and object detection signals, etc. ● Diverse product lineup A variety of limit switches and sensors are available to handle a wide range of applications ● Main features Stable snap action with small operating force Push-in fitting for ø4 tube built-in	Specifications: 1945 1956

Common specifications

Item		Specifications
Working fluid		Compressed air (no lubrication)
Max. working pressure	MPa *1	0.8 (≈120 psi, 8 bar)
Min. working pressure	MPa	0.3 (≈44 psi, 3 bar)
Fluid temperature	°C	5 (41°F) to 60 (140°F)
Ambient temperature	°C *2	0 (32°F) to 60 (140°F) (no freezing)
Effective cross-sectional area	mm^2 *3	2
Port size		ø4
Compatible tube		O.D. ø4.0, I.D. ø2.5, hard nylon tube, soft nylon tube F-1504

*1: The max. working pressure of the air counter (PCT, PCP) is 0.6 MPa.
*2: The ambient temperature range for the solenoid valve PRS is 0 to +40°C.
*3: The effective cross-sectional area of the limit switch (miniature) is 0.7 mm^2.

Sequencer

Appearance	Code	Part name	Model No.	Weight (kg)
		PLC element		
		● With manual button	PSM-A12	0.175
		With push-in swivel fitting		
		With indicator		
		Body only	PSM-A10	0.135
		Sub-base only	PSB-A12	0.040
		PLC sub-base V type		
		● With push-in swivel fitting	PSV-A12	0.045
		PLC AND element		
		● With push-in swivel fitting	PSL-A12	0.035
		With indicator		
		PLC I/O block		
		● With push-in swivel fitting	PSE-A12	0.080
		With P port indicator		
		PLC branch block		
		● With push-in swivel fitting	PSD-A12	0.050
		● R type	PSD-B12	0.050
		(Port R signal braking)		



● PSM-A12



● PSV-A12



● PSL-A12



● PSE-A12



● PSE-A12



● PSD-A12



● PSD-B12

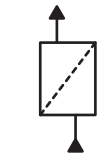



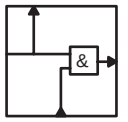

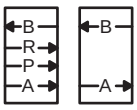

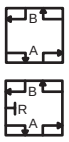

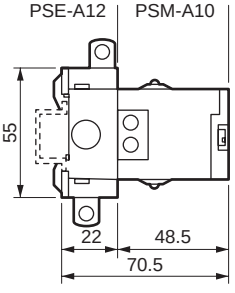

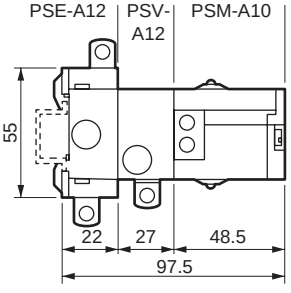

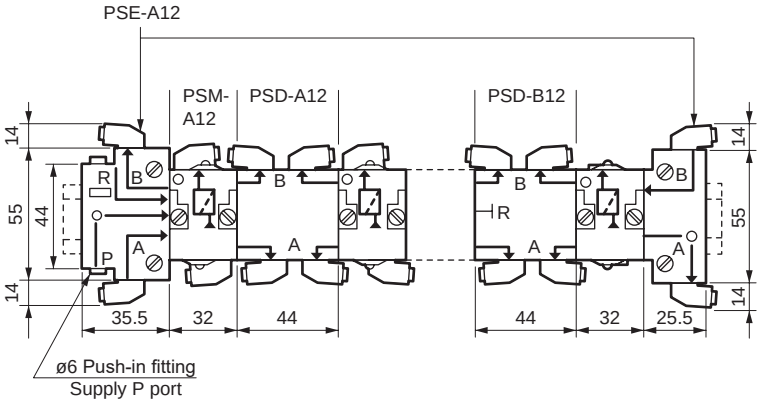

● Note: Use a ø6 tube for the supply P port and ø4 tubes for all other ports.

Relay

Appearance	Code	Part name	Model No.	Weight (kg)
 ● PRT-A12	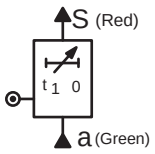	Timer (on-delay) ● With sub-base push-in swivel fitting		
		● 0.1 to 3 sec	PRT-E12	0.165
		● 0.1 to 30 sec	PRT-A12	0.165
		● 10 to 180 sec	PRT-B12	0.165
	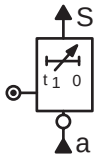	Timer (off-delay)		
		● 0.1 to 3 sec	PRT-F12	0.165
		● 0.1 to 30 sec	PRT-C12	0.165
		● 10 to 180 sec	PRT-D12	0.165
 ● PLJ-C12	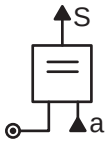	YES element		
		● With sub-base push-in swivel fitting With push-in swivel fitting (Actuation) Output S is issued when there is signal a.	PLJ-C12	0.065
 ● PLL-C12	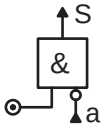	NOT element		
		● With sub-base push-in swivel fitting (Actuation) Output S is issued when there is no signal a.	PLN-C12	0.065
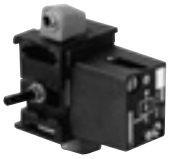 ● PLN-C12	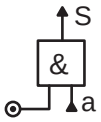	AND element		
		● Sub-base push-in swivel fitting	PLL-C12	0.065
 ● PLK-C12	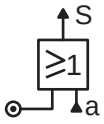	OR element		
		● Sub-base push-in swivel fitting	PLK-C12	0.065
 ● PLN-D12	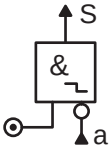	Threshold element		
		● With sub-base push-in fitting, Output S is issued when there is no signal a. Note that signal a does not function until pressure is extremely low.	PLN-D12	0.065

⚠ Cautions for relay

All relay sub-bases are based on PZU-A12. If the sub-base PZU-C12 is required, order the body and sub-base separately. When ordering only the relay body, change the suffix of the model No. from 12 to 10.
For the sub-base relay P □-□12 other than on-delay timer PRT-A12 and threshold element PLN-D12, the body P □-□10 and sub-base PZU-A12 are shipped in separate containers.

On-delay timer: Output S is issued after signal a is input and the set time has elapsed.
Off-delay timer: Output S is constantly issued. Output S stops when signal a is input and the set time has elapsed.

Relay

Appearance	Code	Part name	Model No.	Weight (kg)
 ● PRE-A12	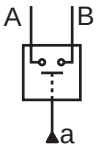	Pressure switch		
		● With sub-base push-in swivel fitting With manual button Contact capacity (resistance load) 600 V/10 A	PRE-A12	0.130
 ● PRS-A121$^{F}_{M}$	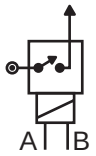	Solenoid valve		
		● With sub-base push-in swivel fitting With manual button	PRS-A121F(110 VAC) PRS-A121M(220 VAC)	0.165 0.165
  ● PLM-A12 ● PLM-A10	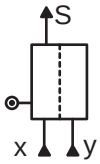	Memory element		
		● With sub-base push-in swivel fitting ● No sub-base	PLM-A12	0.185
		Output S is issued at signal X (setting). Reset at signal y (resetting).	PLM-A10	0.135

Relay sub-base

Appearance	Code	Part name	Model No.	Weight (kg)
 ● PZU-A12	A type 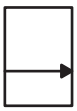	3 port sub-base		
		● A type	PZU-A12	0.040
		● C type	PZU-C12	0.045
  ● PZU-E12 ● PZU-C12	C type 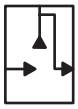	4 port sub-base		
		● With push-in swivel fitting	PZU-B12	0.050
 ● PZU-B12 ● Applicable to 3 port sub-base YES element NOT element AND element OR element Pressure switch Solenoid valve Timer Threshold element Booster ● Applicable to 4 port sub-base Memory element Amplifier	With push-in swivel fitting 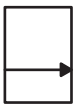 Input block 	Input block		
		● Input block	PZU-E12	0.045

⚠ Cautions for relay

For the sub-base relay P□-□12 other than on-delay timer PRT-A12 and threshold element PLN-D12, the body P□-□10 and sub-base PZU-A12 are shipped in separate containers.

Manifold installation dimensions

Mounting dimensions

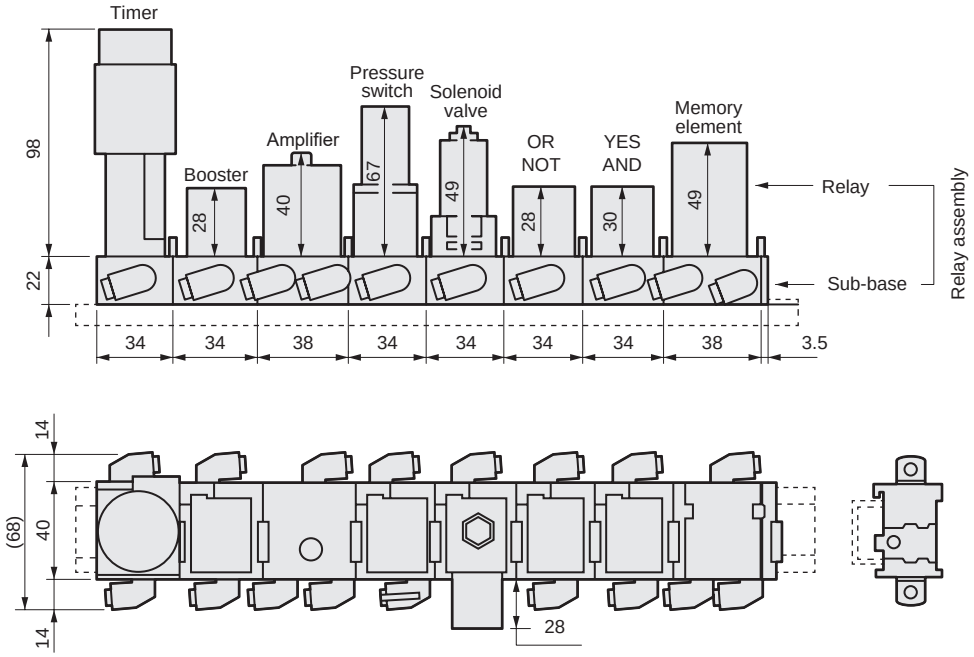

● The above drawing is an example of relay elements installed on the sub-base with a push-in swivel fitting.

Sub-base installation dimensions

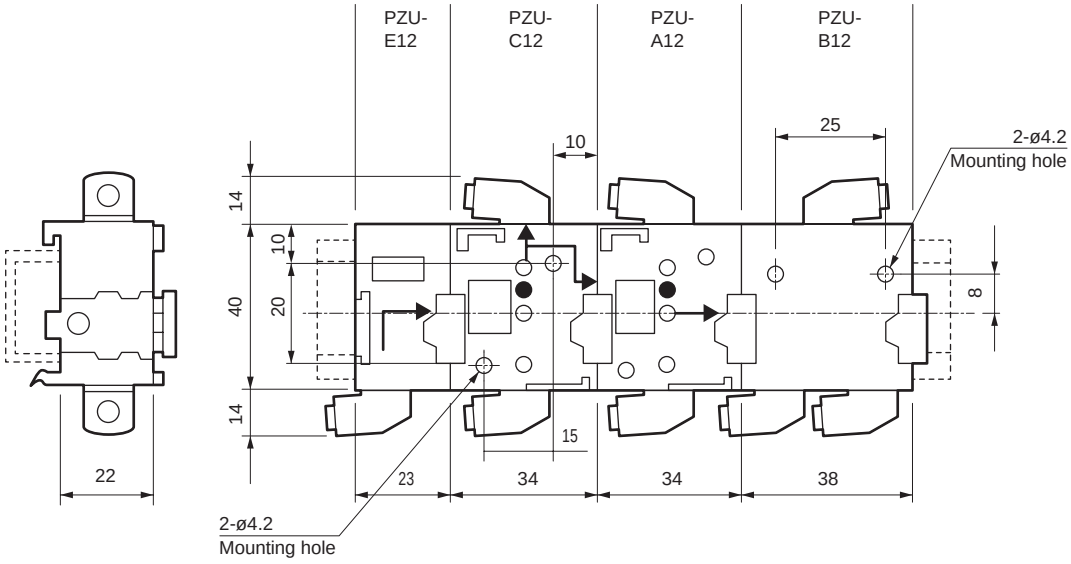

● Use ø4 tubes for all connection ports.
● Can be attached to the rail in a single touch.
● For mounting rails, use those (35 mm width) that conform to the DIN standard.
(DIN rail for pneumatic valves MN4GA and 4GB Series can be purchased.)

Integrated (logic element)

Appearance	Code	Part name	Model No.	Weight (kg)
 ● PLE-B12		Side block		
		● With push-in swivel fitting	PLE-B12	0.075
 ● PLL-B12	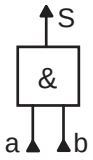	AND element		
		● With push-in swivel fitting (Operation) Output S is issued when both signals a and b are input.	PLL-B12	0.080
 ● PLK-B12	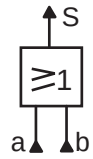	OR element		
		● With push-in swivel fitting (Operation) Output S is issued when signal a or b, or both are input.	PLK-B12	0.080
 ● PLN-B12	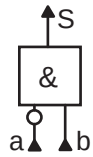	NOT element		
		● With push-in swivel fitting (Operation) Output S is issued when signal b is input and signal a is not.	PLN-B12	0.080

Mounting dimensions

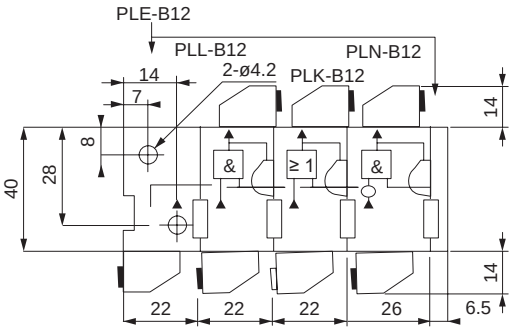

● Use ø4 tubes for all connection ports.



Selector connection

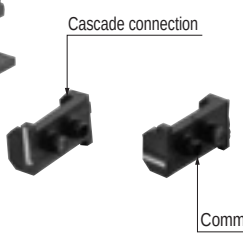

The integrated element is connected through a selector.
The following two methods are used.
1) Cascade line connection
2) COM line connection

Using the selector
The integrated element is connected through a selector.
The following two methods are used.
1. Cascade connection
When the element selector is set in a cascade state, it is internally connected to inside board b. The circuit is called a cascade circuit when all elements are set in a cascade state.
2. Common connection
When the element selector is set in a common connection state, each element's inside board b is connected straight. The circuit is called a common input circuit when all elements are connected in a common state.

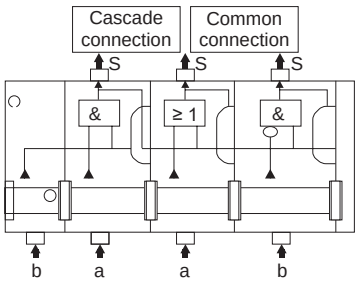

Line type (logic element)

Appearance	Code	Part name	Model No.	Weight (kg)
 ● PLL-A11	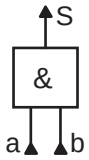	AND element		
		● With push-in fitting	PLL-A11	0.065
 ● PLK-A11	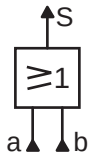	OR element		
		● With push-in fitting	PLK-A11	0.065
 ● PZM-L199		Mounting bracket (including mounting screws)		
		● Used for rail installation.	PZM-L199	0.015

Mounting dimensions

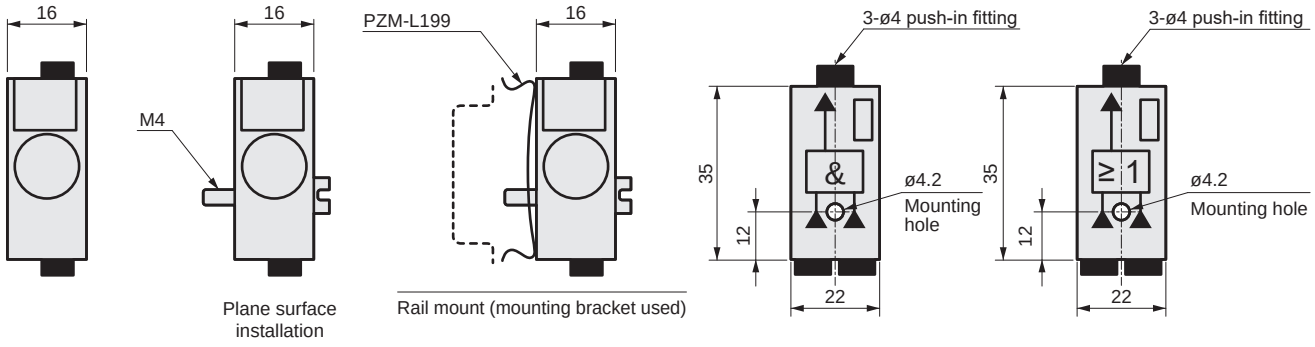

Air lamp

Appearance	Type of color	Model No.	Weight (kg)
 ● PXV-M1 ☐	Air lamp		
	● Green with push-in fitting	PXV-M131	0.085
	● Orange with push-in fitting	PXV-M141	0.085
	● Yellow with push-in fitting	PXV-M151	0.085

Installation explanation

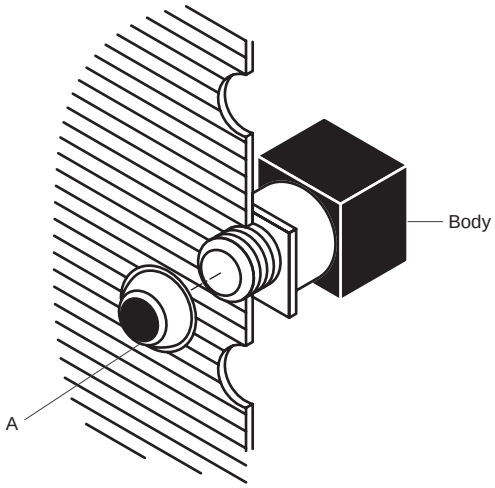

When installing on a panel, turn lens (A) to the left to remove it. Insert the body from the back of the panel, then turn lens (A) to the right to fix it in place.

* Colors shown above are used when supplying air.

Mounting dimensions

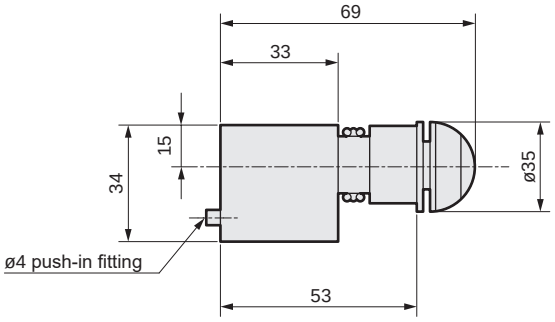

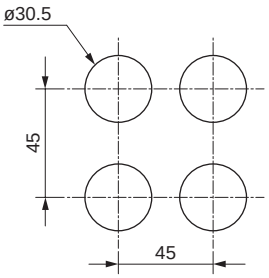

(Mounting hole plate thickness: t1.5 to 6)

Element and sensor

Appearance	Code	Part name	Model No.	Weight (kg)
● PRF-A12	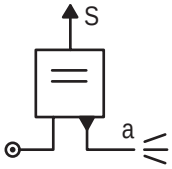	**Booster**		
		● With sub-base push-in swivel fitting Booster signal a is connected to the limit sensor on the machine. Booster output S is issued by closing the bleed hole on the end of the limit sensor.	PRF-A12	0.070
● PXF-A111		**Limit sensor touch**		
		● Push-in fitting	PXF-A111	0.030
● PXF-A121		**Limit sensor ball roller**		
		● Push-in fitting	PXF-A121	0.035
● PXF-A131		**Limit sensor wire**		
		● Push-in fitting	PXF-A131	0.035
● PRD-A12	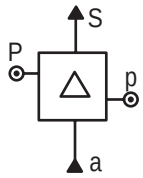	**Amplifier**		
		● With sub-base push-in swivel fitting With manual button Fine pressure signal a from the proximity sensor, etc., is amplified to the supply pressure to issue output S.	PRD-A12	0.175
● PXD-A111		**Proximity sensor**		
		● Push-in fitting	PXD-A111	0.060







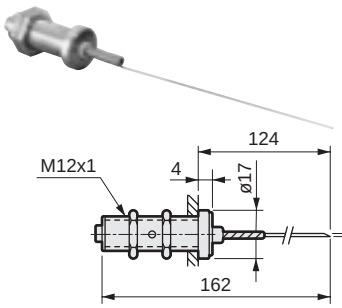





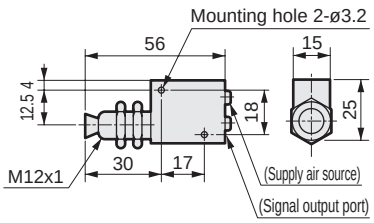

⚠ Element and sensor cautions
The body PRF-A10 and sub-base PZU-A12 are shipped in separate containers for the booster PRF-A12.
The body PRD-A10 and sub-base PZU-B12 are shipped in separate containers for the amplifier PRD-A12.

Pushbutton switch/switch body (separated)

Outline drawing	Code	Part name	Model No.		Weight (kg)
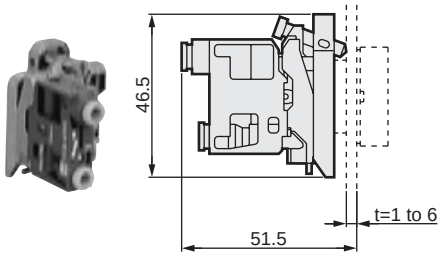 ● Switch body with mounting base	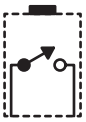	Discrete switch body NC (with switch head installation base)			
		● Flow rate 60 ℓ/min (ANR) (At pressure 0.6 MPa)	PXB-B	3111B	0.048
	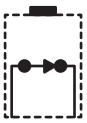	Discrete switch body NO (with switch head installation base)			
		● Flow rate 60 ℓ/min (ANR) (At pressure 0.6 MPa)	PXB-B	3121B	0.048
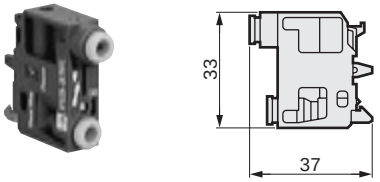 ● Switch body only	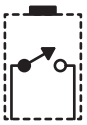	Only switch body NC			
		● Flow rate 60 ℓ/min (ANR) (At pressure 0.6 MPa)	PXB-B	3911	0.010
	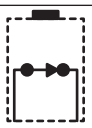	Only switch body NO			
		● Flow rate 60 ℓ/min (ANR) (At pressure 0.6 MPa)	PXB-B	3921	0.010

Safety Precautions

◆ Installing on and removing from the panel

Mounting

①With the arrow facing up, push in the switch head from the front of the panel.
②Push in the switch body, aligning the arrow on it with the arrow on the switch head.
③Tighten the fixing screw on the bottom. (Tightening torque: Max. 0.8 N·m)

Removal

④Loosen the fixing screw on the bottom.
⑤Lift up the switch body hook with a flathead screwdriver.
⑥Pull out the entire switch body.

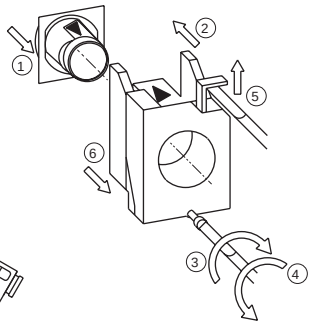

◆ Installing and removing the switch body on/from the installation base

Mounting

①Align the protrusion on the bottom of the switch body with the groove on the bottom of the mounting base.
②Push in the top part until it clicks.

Removal

③Lift up the bracket on the top of the switch body with a flathead screwdriver.
④Remove the switch body.

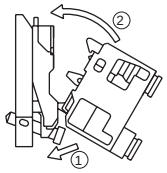

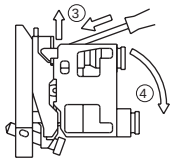

◆ Min. panel cut dimension
Panel thickness: 1 to 6 mm

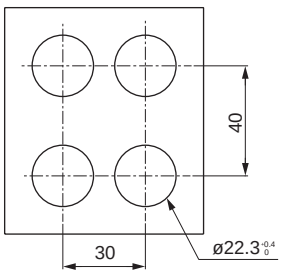

Model No. of push button
Model No. of only switch body: PXB-B *1
Model No. of only switch head: ZB4-B *2
Model No. of switch combination: PXB-B *1 *2

PXB-B *1 *2

Switch head (separated)

◇ Push button head

Outline drawing	Type	Actuation	Color	Model No.		Weight (kg)
● Flat  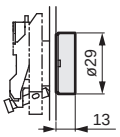	Flat shape	Momentary (Automatic return)	Black	ZB4-B	A2	0.029
			Green	ZB4-B	A3	0.029
			Red	ZB4-B	A4	0.029
			Yellow	ZB4-B	A5	0.029
● Protrusion  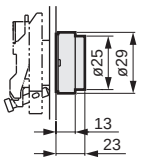	Extension	Momentary (Automatic return)	Black	ZB4-B	L2	0.030
			Green	ZB4-B	L3	0.030
			Red	ZB4-B	L4	0.030
			Yellow	ZB4-B	L5	0.030
● Dust-proof  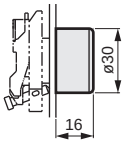	Dust-proof	Momentary (Automatic return)	Black	ZB4-B	P2	0.031
● Mushroom  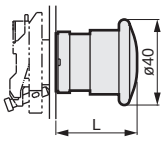	Mushroom (Head diameter ø40 mm)	Momentary (Automatic return)	Black	ZB4-B	C2	0.072
			Green	ZB4-B	C3	0.072
			Red	ZB4-B	C4	0.072
			Yellow	ZB4-B	C5	0.072
		Latch, push/pull	Red	ZB4-B	T84	0.078
		Latch, turn/release	Red	ZB4-B	S844	0.073
● Large mushroom  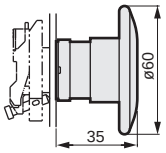	Large mushroom (Head diameter ø60 mm)	Momentary (Automatic return)	Black	ZB4-B	R2	0.093

Model No.	L
ZB4-BC□	32
ZB4-BT84	38.5
ZB4-BS844	39.5

◇ Selector head

Outline drawing	Type	Actuation		Model No.		Weight (kg)
● Standard handle  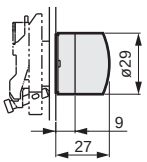	Standard handle, black	2-position self-hold		ZB4-B	D2	0.044
		3-position self-hold		ZB4-B	D3	0.044
● Long handle  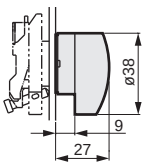	Long handle, black	2-position self-hold		ZB4-B	J2	0.044
		3-position self-hold		ZB4-B	J3	0.044
		3-position automatic return		ZB4-B	J5	0.044
		3-position left side automatic return right side self-hold		ZB4-B	J7	0.044
● Select with key  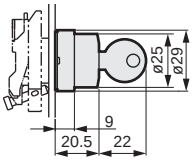	Select type with key	2-position self-hold		ZB4-B	G2	0.069
		2-position self-hold		ZB4-B	G4	0.069

indicates the key release position.

Model No. of switch body and switch head combination
[Example] Combination of discrete switch body NC and mushroom redhead Model No.: PXB-B3111BC4.

Miniature limit switch

Appearance	Code	Part name	Model No.	Weight (kg)
● PXC-M111		Plunger push-in fitting		
		Direct acting 3-port valve NC EXH is released into the atmosphere. JIS symbol 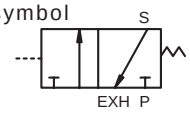	PXC-M111	0.030
● PXC-M121		Roller lever push-in fitting		
			PXC-M121	0.040
● PXC-M521		Roller lever		
			PXC-M521	0.060

Attachment for PXC-M111

Appearance	Code	Part name	Model No.	Weight (kg)
● PXC-Z12		One way roller lever		
			PXC-Z12	0.008
● PXC-Z11		Roller lever		
			PXC-Z11	0.008

Compact limit switch

Appearance	Code	Part name	Model No.	Weight (kg)
 ● PXC-M601A110		Plunger		
		Direct acting 3-port valve NC JIS symbol 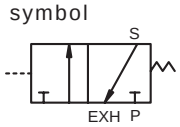	PXC-M601A110	0.150
 ● PXC-M601A102		Roller plunger		
			PXC-M601A102	0.160
 ● PXC-M601A103		Cross roller plunger		
			PXC-M601A103	0.160

Attachment

Appearance	Code	Part name	Model No.	Weight (kg)
 ● XCM-Z24		One way roller lever		
			XCM-Z24	0.080

Compact limit switch specifications

Specifications

Item	PXC-M601A110	PXC-M601A102	PXC-M601A103	PXC-M601A110 +XCM-Z24	PXC-M111	PXC-M121	PXC-M521
Max. operating speed	0.5 m/s	0.1 m/s	0.1 m/s	0.5 m/s	0.5 m/s	1.0 m/s	1.0 m/s
Operating distance: A *1	1.7 mm	1.7 mm	1.7 mm	9.4 mm(A)	0.9 mm	2.0 mm	2.2 mm
Max. distance: B	5.0 mm	5.0 mm	5.0 mm	-	1.4 mm	3.2 mm	5.8 mm
Return distance	0.3 mm	0.2 mm	0.2 mm	1.2 mm(A)	0.15 mm	0.3 mm	0.5 mm
Min. operating force *1	24 N	23 N	23 N	19 N	11 N	4.5 N	7 N
	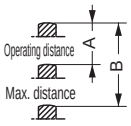	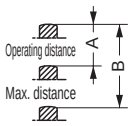	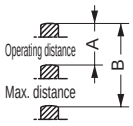	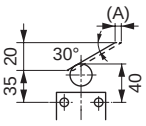	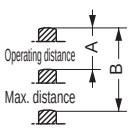	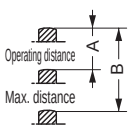	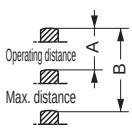

*1: Value at supply pressure of 0.6 MPa.

Compact limit switch

Dimensions

● PXC-M601A102

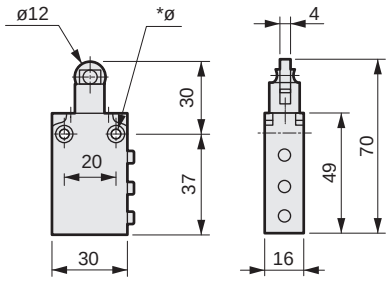

● PXC-M601A103

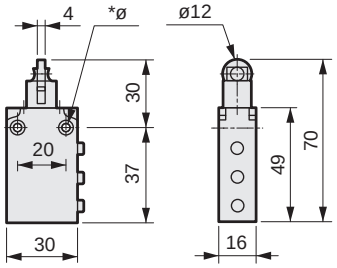

● PXC-M601A110

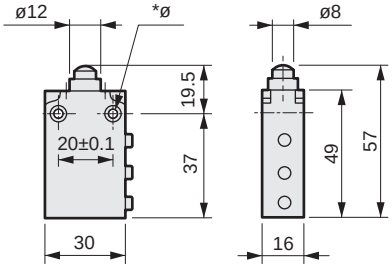

● PXC-M601A110+
XCM-Z24

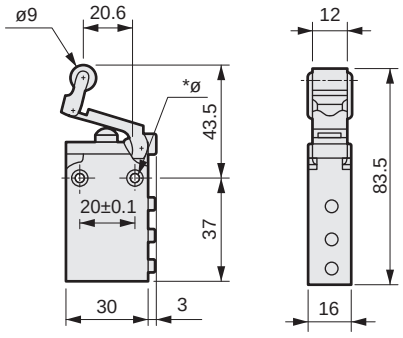

* ø hole detailed dimensions
2-ø4.3 through
2-spot face diameter ø8.2
spot face depth 4

● PXC-M111

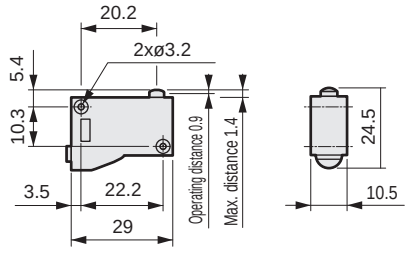

● PXC-Z11

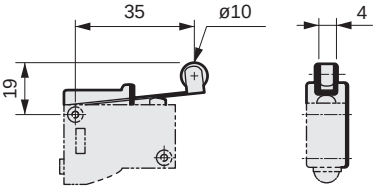

● PXC-Z12

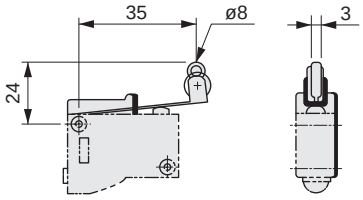

● PXC-M121

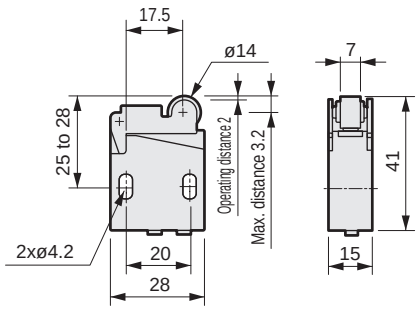

● PXC-M521

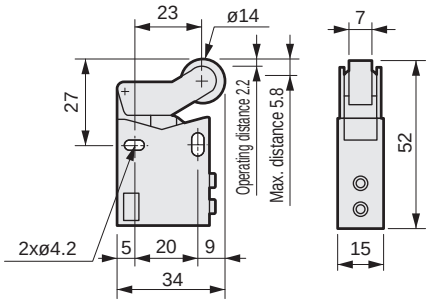

Limit switch

Appearance	Part name	Model No.		Weight (kg)
	NC			
 ● PXC-K211	● Push-in fitting pilot operated 3-port valve NC.	PXC-K	211	0.32
 JIS symbol 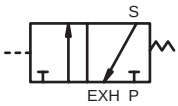				
	NO			
 ● PXC-K221	● Push-in fitting pilot operated 3-port valve NO.	PXC-K	221	0.32
 JIS symbol 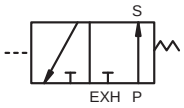				

Appearance	Part name	Model No.		Weight (kg)
	Plunger			
 ● ZCK-D01		ZCK-D	01	0.100
	Roller			
 ● ZCK-D02		ZCK-D	02	0.140
	Roller lever			
	Resin	ZCK-D	21	0.150
 ● ZCK-D21 D23	Steel	ZCK-D	23	0.160
	Wire			
 ● ZCK-D06		ZCK-D	06	0.100
	* Coil spring			
 ● ZCK-D08		ZCK-D	08	0.035

How to order (single unit)

● Model No. of switch body only PXC-K ☐☐☐
● Model No. of head only ZCK-D ☐☐
● Model No. of lever only ZCK-Y ☐☐

Rotary head lever actuator

Appearance	Part name	Model No.		Weight (kg)
	Rotary			
		ZCK-D	05	0.060



● ZCK-D05

Note: Three output methods can be used by changing the position of the inner cam. Refer to page 1962 for details.



Appearance	Part name	Model No.		Weight (kg)
	Roller lever			
	Resin roller	ZCK-Y	31	0.020
	Steel roller	ZCK-Y	33	0.030
	Bearing roller	ZCK-Y	34	0.030



● ZCK-Y31

	Adjusting			
	Resin roller	ZCK-Y	41	0.030



● ZCK-Y41

	Rod lever			
	Round rod	ZCK-Y	55	0.025
	Square rod	ZCK-Y	54	0.025
	Round rod (ø3 glass fiber)			
	Square rod (□3 steel)			



● ZCK-Y55

	Spring			
		ZCK-Y	81	0.010



● ZCK-Y81

	Spring rod			
		ZCK-Y	91	0.030



● ZCK-Y91

How to order combination

● Model No. of plunger and switch combination PXC-K [···] [··]
● Model No. of rotary and switch combination PXC-K [···] 05
● Model No. of lever/rotary and switch combination PXC-K [···] 05 [··]

[Example] Switch body, head, lever actuator combination, NC, rotary, and resin roller
PXC-K211 05 31 = PXC-K2110531

* Custom order product.

Limit switch

Specification PXC-K$2^{1}_{2}1$

Appearance	Item	ZCK-D01	ZCK-D02	ZCK-D21 ZCK-D23	ZCK-D06 ZCK-D08
● ZCK-D01	Max. operating speed	0.5 m/S	0.5 m/S	1.5 m/S	1 m/S
	Operating distance: A *1	0.5 mm	0.5 mm	0.5 mm	-
	Max. distance: B	2.2 mm	2.2 mm	2.6 mm	-
	Return distance	0.2 mm	0.2 mm	0.2 mm	-
	A operating angle *1	-	-	-	35°
● ZCK-D02	Return angle	-	-		12°
	Min. operating force *1	16 N	20 N	15 N	-
	Min. operating torque *1	-	-	-	0.12 N.m

*1: Value at supply pressure of 0.6 MPa.





● ZCK-D06



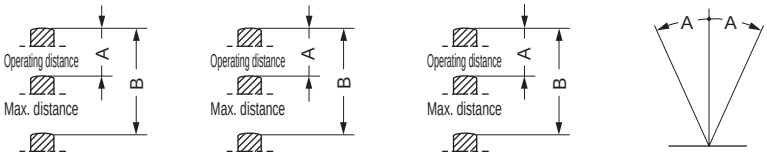

Rotary head ZCK-D05

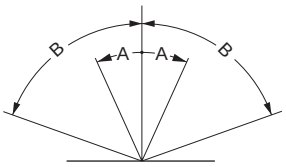

A operating angle *1	31°
B-Max. angle	80°
Return angle	3°
Min. operating torque *1	0.21 N.m

*1: Value at supply pressure of 0.6 MPa.

● Retrieving the output signal

Output signal retrieval is altered by changing the position of the internal cam as shown below.

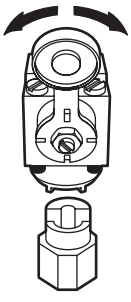

Output signal: Left-right

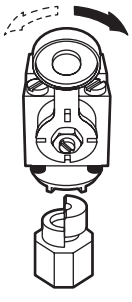

For right

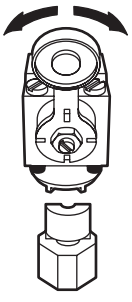

Left-right

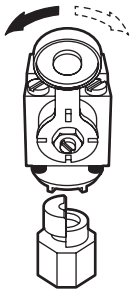

For left

Limit switch

Dimensions

● PXC-K21101, PXC-K22101

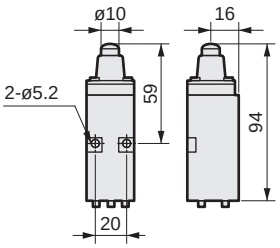

● PXC-K21102, PXC-K22102

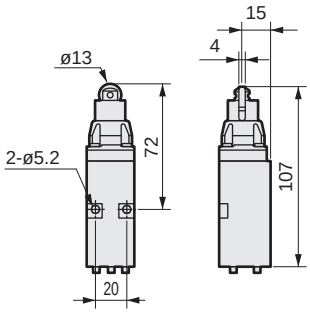

● PXC-K21121, PXC-K22121
K21123 K22123

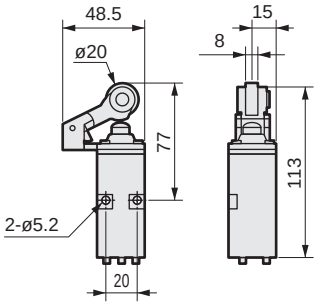

● PXC-K21106, PXC-K22106

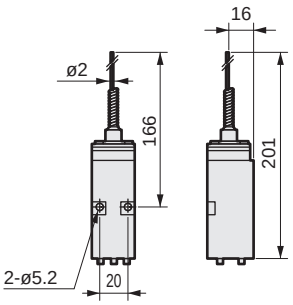

● PXC-K2110531, PXC-K2210531

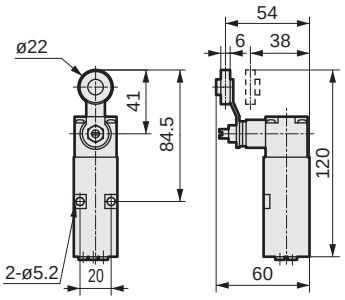

● PXC-K2110541, PXC-K2210541

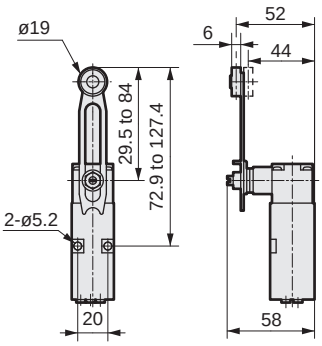

● PXC-K21108 ● PXC-K22108

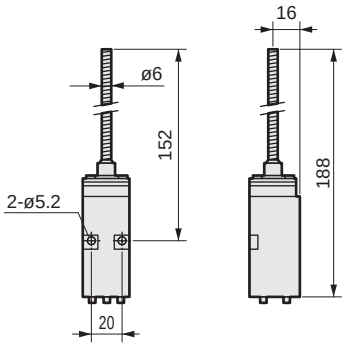

● ZCK-Y54, ZCK-Y55

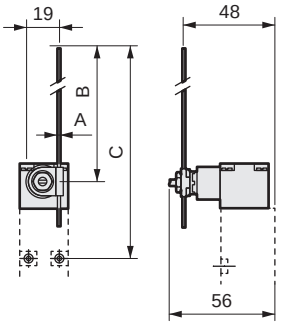

	ZCK-Y55	ZCK-Y54
A	ø3	□3
B	11 to 115	11 to 115
C	53 to 158	53 to 158

● ZCK-Y81

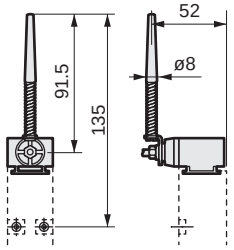

● ZCK-Y91

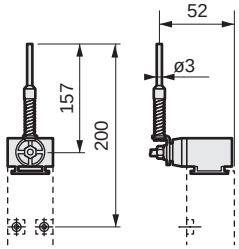

● PXC-K211, PXC-K221

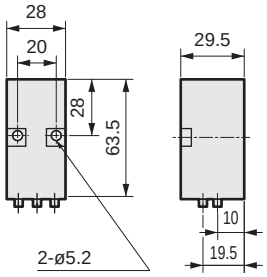

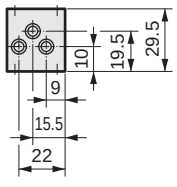

Accessory

Appearance



● PXC-X14

● Applications

Use for PLC, relay, integrated, and line type logical elements, and for terminal blocks.

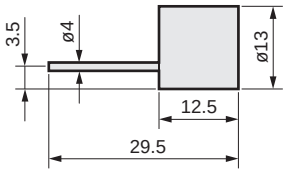

Silencer

Model No.	Weight (kg)
PXC-X14	0.040

Systems

Page

Components for clean room specifications (New Fine System) — Ending 2

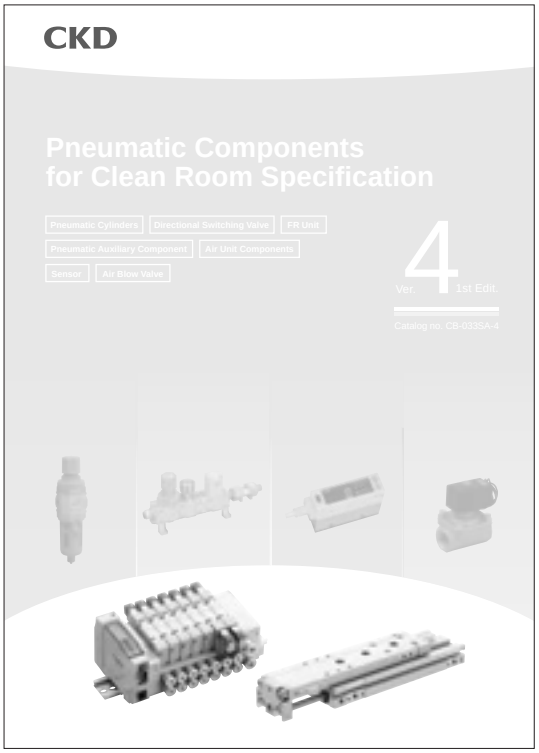

Components for clean room specifications

Catalog No.CB-033SA

Satisfies the various levels of clean room cleanliness in a wide range of industries

● Reliably producing high cleanliness air

Clean blow system model circuit

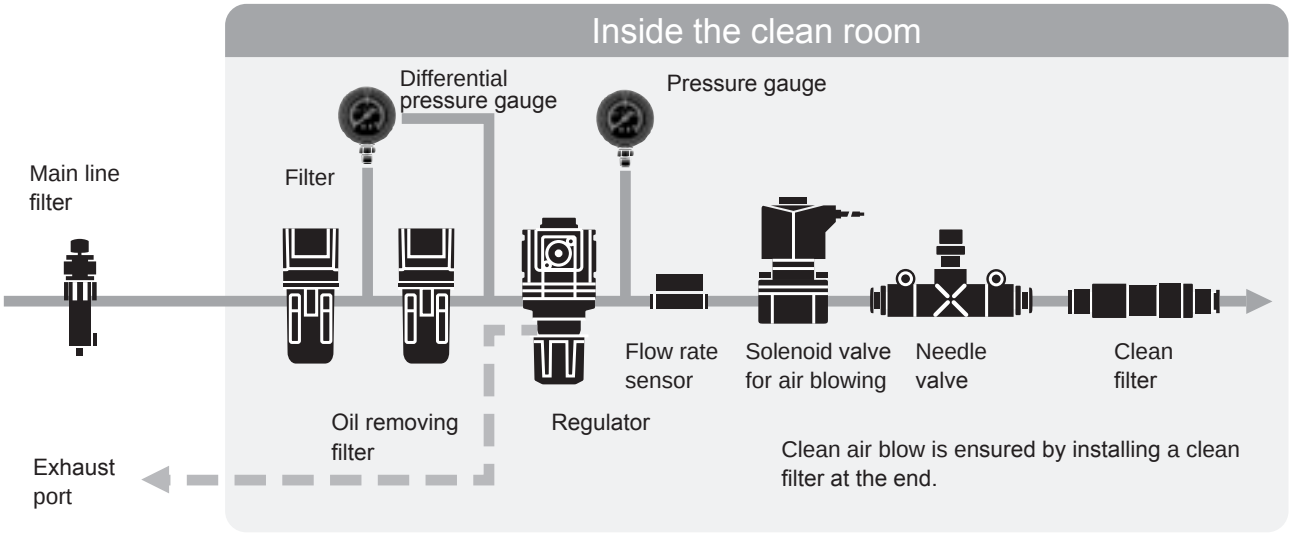

● Zero particle generation with vacuum treatment and exhaust port

Air-driven actuator system circuit structure

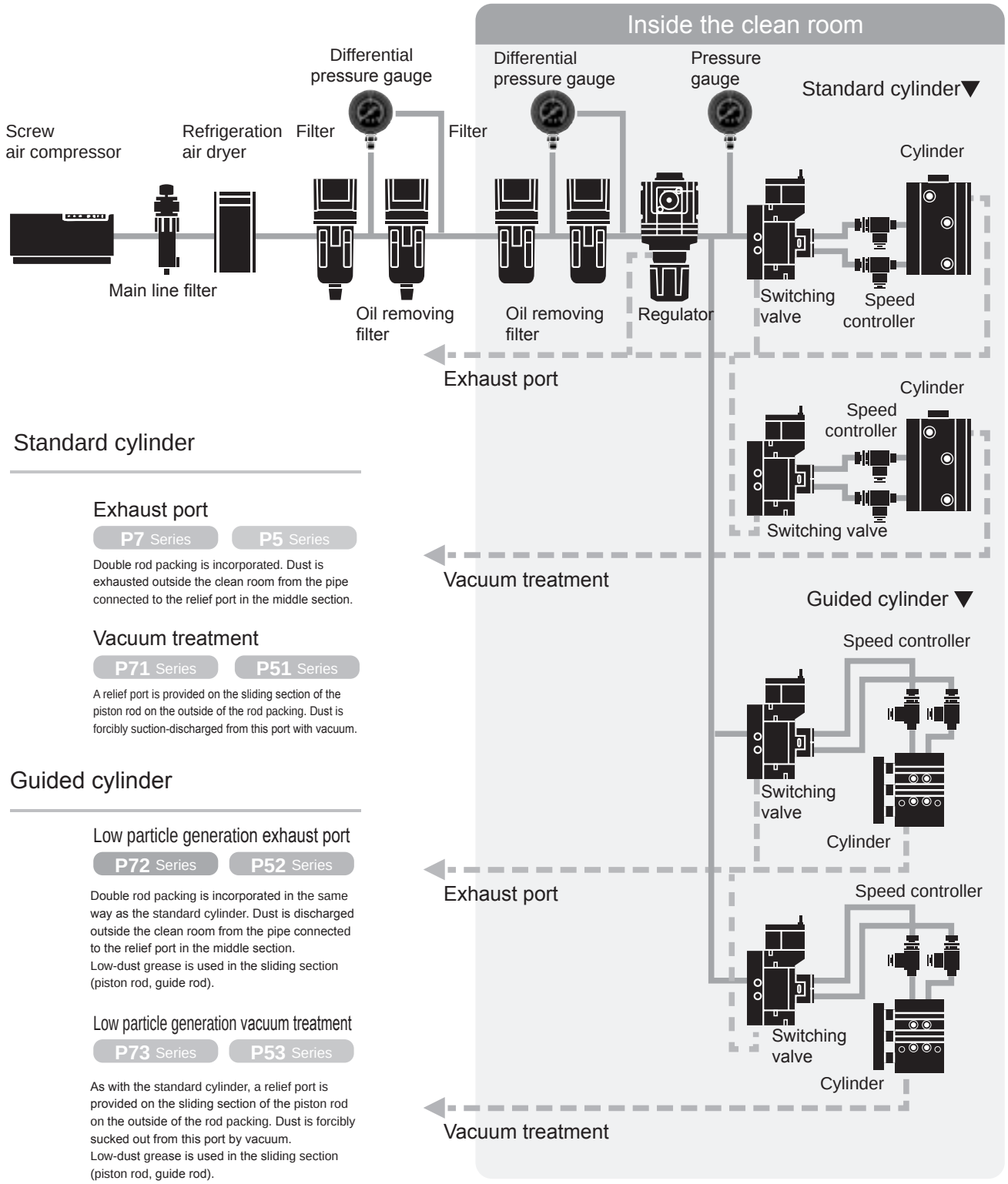

Standard cylinder

Exhaust port

P7 Series P5 Series

Double rod packing is incorporated. Dust is exhausted outside the clean room from the pipe connected to the relief port in the middle section.

Vacuum treatment

P71 Series P51 Series

A relief port is provided on the sliding section of the piston rod on the outside of the rod packing. Dust is forcibly suction-discharged from this port with vacuum.

Guided cylinder

Low particle generation exhaust port

P72 Series P52 Series

Double rod packing is incorporated in the same way as the standard cylinder. Dust is discharged outside the clean room from the pipe connected to the relief port in the middle section.
Low-dust grease is used in the sliding section (piston rod, guide rod).

Low particle generation vacuum treatment

P73 Series P53 Series

As with the standard cylinder, a relief port is provided on the sliding section of the piston rod on the outside of the rod packing. Dust is forcibly sucked out from this port by vacuum.
Low-dust grease is used in the sliding section (piston rod, guide rod).

Ozone proof components

Page

Influence of ozone Ending 6

Ozone proof component selection range Ending 7

Support by product group Ending 8

Plant environments easily affected by ozone

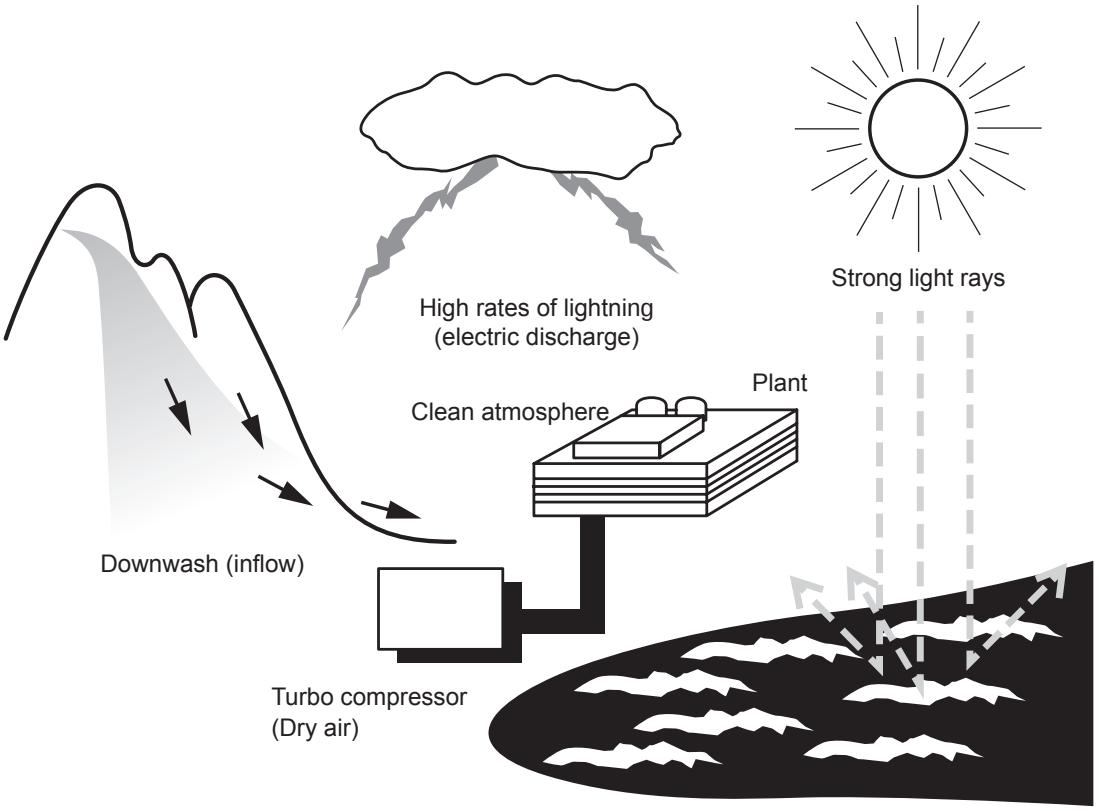

Pneumatic components affected by ozone

Diaphragm and valve seat of regulator

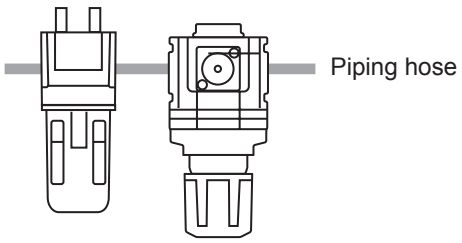

Repeated stress accelerates rubber deterioration

Valve seat of air blow valve

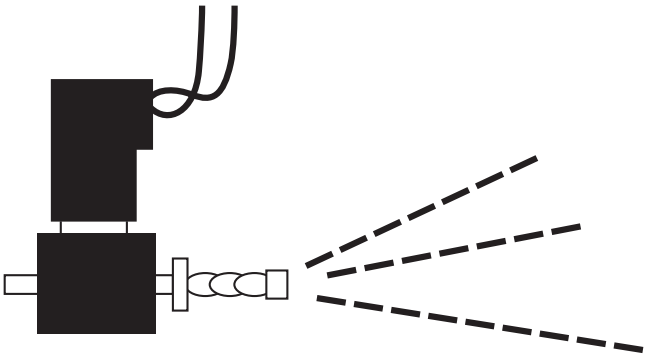

High air flow speed at orifice

Ozone proof component selection range

A typical pneumatic component system consists of the following devices.

Devices in [ ] require ozone countermeasures.

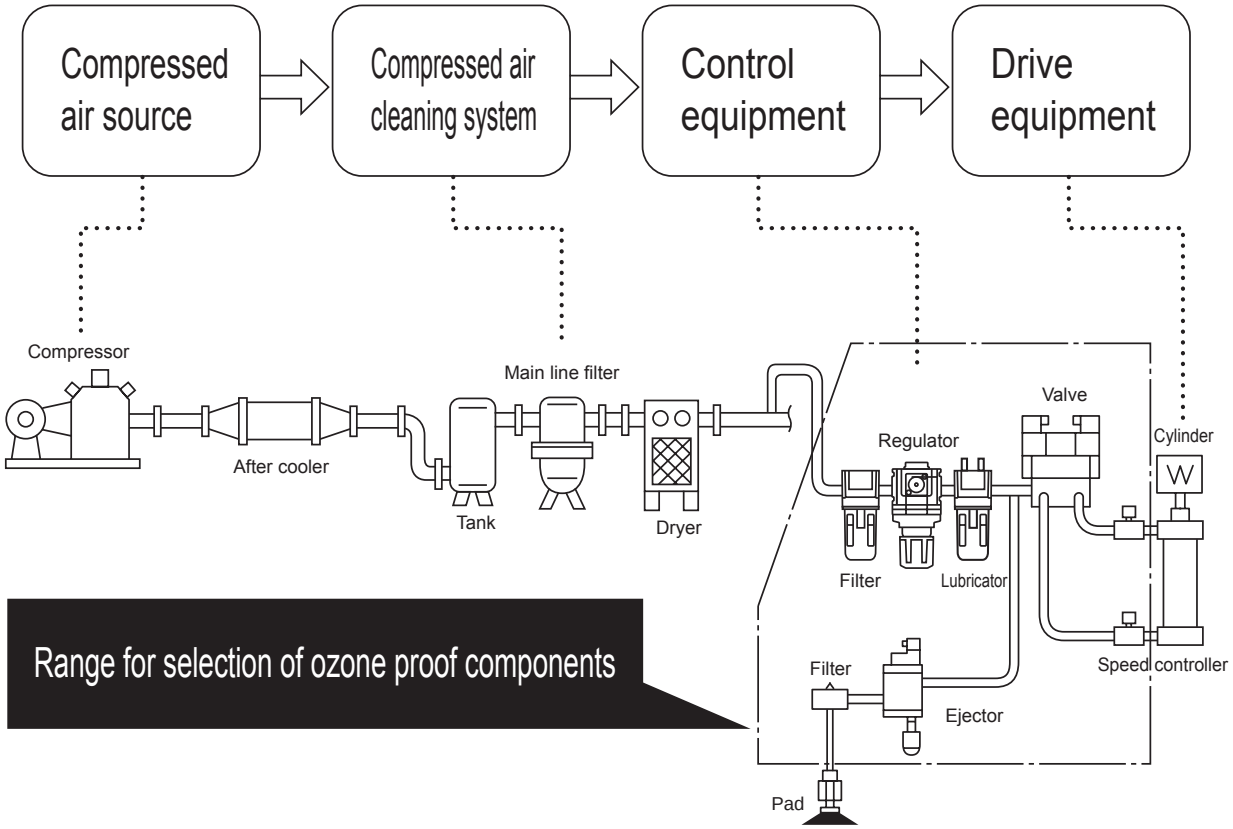

⚠ Safety precautions

Ozone-proof components use fluoro rubber or hydrogenated nitrile rubber for rubber parts.
Therefore, special working environments and conditions that differ from the standard products must be considered when evaluating performance and service life.

Support by product group

1. Pneumatic cylinders

Available as standard specifications.

2. Pneumatic valves

Pneumatic valves are available as indicated below.

● Option
Ozone-proof specifications are available as an option.

● -P11 compatible
Parts with ozone-proof specifications are available by adding -P11 at the end of the model No. (Custom order product)

Ozone countermeasures

The material of the rubber parts differs from standard products.
(Dimensions are the same as for standard products.)

Option compatible model

Series		Model No.	How to order
4G Series	4, 5-port valve	4G$^{A}_{B}$* M4G$^{A}_{B}$* MN4G$^{A}_{B}$*	Selectable with option code A. Example) Single unit [Model No.] [Solenoid position] - [Port size] - [Electrical connections] [Option] A - [Rated voltage] Example) Manifold [Model No.] [Solenoid position] - [Port size] - [Electrical connections] [Option] A - [Station No.] - [Rated voltage]
	3-port valve	3G$^{A}_{B}$* M3G$^{A}_{B}$* MN3G$^{A}_{B}$*	
W4G2 Series	4, 5-port valve	W4GB2* MW4G$^{\hat{B}}_{2}$2*	
	3-port valve	MW3GA2*	
MN4E0 Series	4-port valve	MN4E0*	
	3-port valve	MN3E0*	

-P11 compatible model

Series		Model No.	How to order
4S0 Series	5-port valve	4S$^{A}_{B}$0* M4S$^{A}_{B}$0*	Available by adding -P11 at the end of the model No. (Custom order product) Example) Discrete [Model No.] [Solenoid position] - [Port size] - [Manual operating device] [Electrical connections] [Option] - [Rated voltage] -P11 Example) Manifold [Model No.] [Solenoid position] - [Port size] - [Manual operating device] [Electrical connections] [Option] - [Station No.] - [Rated voltage] - P11
MN4S0 Series	4-port valve	MN4S0* MT4S0*	
	3-port valve	MN3S0* MT3S0*	
4K Series	4, 5-port valve	4K$^{A}_{B}$* M4K$^{A}_{B}$* MN4KB*	
	3-port valve	3KA* M3KA*	
3M Series	3-port valve	3M$^{A}_{B}$0* M3M$^{A}_{B}$0*	
3P Series	3-port valve	3P$^{A}_{B}$* M3P$^{A}_{B}$*	

3. Refining and pressure adjusting components (F.R.L.)

Refer to the “How to order” of each model (Ending Pages 144 to 151).

4. Pneumatic auxiliary components

Pneumatic auxiliary components are available as follows:

● Option
Ozone-proof specifications are available as an option.

● -P11 compatible
Parts with ozone-proof specifications are available by adding -P11 at the end of the model No. (Custom order product)

Ozone countermeasures

The material of the rubber parts differs from standard products.
(Dimensions are the same as the standard products.)

Option compatible model

Series	Model No.	How to order
Speed controller	SC1	Selectable with option code “X1”.
Medium bore size		SC1-[Piping port size]-X1

-P11 compatible model

Series	Model No.	How to order
Speed controller Direct piping/elbow	SC3R	SC3R - [Piping port size] - [Option] P11
Speed controller Elbow with push-in fitting	SC3W	SC3W - [Piping size] - [Compatible tube O.D.] - [Option] P11
Miniature fitting	F	F[Shape] [Flow path shape] [Compatible tube] - [Piping size] - P11
Fitting	GW	GW [Shape] [Compatible tube] - [Piping size] - [Other combination] - P11
Fitting stainless steel	ZW	ZW-[Shape] [Compatible tube O.D.]-[Piping size]-P11

* The following models are available as standard.
Speed controller SCL2/SCD2 Series, silencer SLM/SLW Series, stainless steel fitting ZJ Series, tube F.U.KX

5. Sensors

* The following models are available as standard.
· Mechanical pressure switch (reed small pressure switch) P*100-W Series
· Pressure switch P4000-W Series

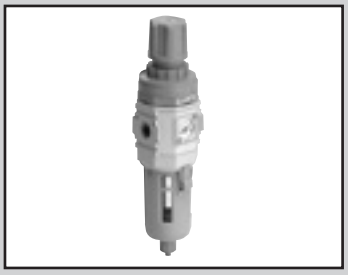

Filter regulator Standard White Series: Ozone proof

W1000-W/W3000-W W4000-W/W8000-W-P11 Series

Fluoro rubber and hydrogenated nitrile rubber, etc., used for rubber part materials.

● Port size: Rc1/8 to Rc1

JIS symbol 

RoHS CAD

How to order

W1000 - 6 ( ) - W - Z P11 - ( ) - A6W G49P

- W1000 — Ⓐ Model No.
- 6 — Ⓑ Port size
- W — Ozone-proof specifications
- Z — Ⓒ Port thread
- P11 — Ⓓ Option *2 *3 *4 *5 *6
- A6W — Ⓔ Display unit
- G49P — Ⓕ Pipe adaptor set (attachments) *7 *8; Ⓖ Other attachments

Code	Content	Ⓐ Model No. W1000	W3000	W4000	W8000
Ⓑ Port size					
6	1/8	●			
8	1/4	●	●	●	
10	3/8		●	●	
15	1/2			●	
20	3/4				●
25	1				●
Ⓒ Port thread	*9				
Blank	Rc thread	●	●	●	●
N	NPT thread	●	●	●	●
G	G thread	●	●	●	●
Ⓓ Option					
Drain discharge **Blank**	Manual drain cock	●	●	●	●
F	Auto-drain manual override (NO)		●	●	●
F1	Auto-drain manual override (NC)		●	●	●
FF	Large auto-drain with manual override (NO)				●
FF1	Large auto-drain with manual override (NC)				●
Bowl material **Blank**	Polycarbonate bowl	●	●	●	●
Z	Nylon bowl	●	●	●	●
M	Metal bowl		●	●	●
Element **Blank**	5 µm	●	●	●	●
Y	0.3 µm (submicron)		●	●	●
Pressure range **Blank**	0.05 to 0.85 MPa	●	●	●	●
L	0.05 to 0.35 MPa	●	●	●	●
Pressure relief **Blank**	With relief mechanism	●	●	●	●
N	Non-relief	●	●	●	●
Pressure gauge **Blank**	With standard pressure gauge (G401)	●	●	●	●
T	No pressure gauge (gauge port (1/4) is assembled sealed)	●	●	●	●
T8	Pressure gauge ready option (gauge port (1/4) is left open)	●	●	●	●
X1	IN/OUT reverse flow (right to left)	●	●	●	●
Ⓔ Display unit					
Blank	MPa display (Rc thread), psi display (NPT thread), bar display (G thread)	●	●	●	●
J1	MPa display (NPT, G thread)	●	●	●	●
Ⓕ Pipe adaptor set (attachments)	*10				
Blank	Without enclosed product	●	●	●	●
A6*W	1/8 pipe adaptor set	●			
A8*W	1/4 pipe adaptor set	●	●	●	
A10*W	3/8 pipe adaptor set	●	●	●	
A15*W	1/2 pipe adaptor set		●	●	
A20*W	3/4 pipe adaptor set			●	●
A25*W	1 pipe adaptor set				●
A32*W	1 1/4 pipe adaptor set				●
*** Adaptor thread**					
Blank	Rc thread	●	●	●	●
N	NPT thread	●	●	●	●
G	G thread	●	●	●	●
Ⓖ Other attachments	*11				
Blank	Without enclosed product	●	●	●	●
BW	C-bracket	●	●	●	●
B3W	L-bracket	●	●	●	
G49P	Pressure gauge: G49D-8-P10 (L: G49D-8-P04)	●	●	●	●
G59P	Pressure gauge: G59D-8-P10 (L: G59D-8-P04)	●	●	●	●
G40P	Pressure gauge: G40D-8-P10 (L: G40D-8-P04)	●	●	●	●

⚠ Precautions for model No. selection

*1: Refer to "Pneumatic, Vacuum and Auxiliary Components (catalog No. CB-024SA)" for specifications and attachments.
*2: Select options for the drainage, bowl material, element and regulator.
When selecting options for several items, list options in order from the top.
*3: If "L" is selected for pressure range option, a low-pressure gauge (0 to 0.4 MPa) is used.
*4: In the case of option code "F", the min. working pressure of the auto-drain is 0.1 MPa.
Air is purged with initial drain until pressure reaches 0.1 MPa.
*5: In the case of option code "F1", the min. working pressure of the auto-drain is 0.15 MPa.
*6: For "T", a gauge plug is assembled instead of a pressure gauge.
*7: Pipe adaptor set A*00-**-W is enclosed.
*8: The pipe adaptor set and C-bracket cannot be used together.
*9: G threads and NPT threads are available for IN, OUT, gauge port and drain outlet (metal bowl with auto-drain).
*10: The adaptor port size can be selected from Rc, NPT or G.
Blank: Rc thread, N: NPT thread, G: G thread.
(Example) A8G
*11: If NPT is selected for ©Port thread, an NPT pressure gauge is supplied. If Rc or G thread is selected, an R thread pressure gauge is supplied.

Dimensions

Same as standard products. Refer to "Pneumatic, Vacuum and Auxiliary Components (catalog No. CB-024SA)".

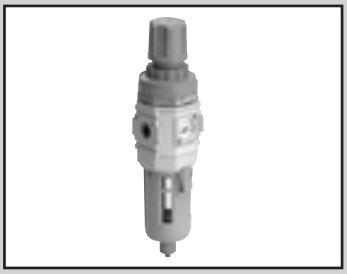

Reverse filter and regulator Standard White Series: Ozone proof

W1100-W/W3100-W W4100-W/W8100-W-P11 Series

Fluoro rubber and hydrogenated nitrile rubber, etc., used for rubber part materials.

● Port size: Rc1/8 to Rc1

JIS symbol 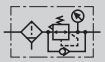

RoHS CAD

How to order

W1000 - 6 ( ) - W - Z P11 - ( ) - A6W G49P

- Ⓐ Model No.
- Ⓑ Port size
- Ozone-proof specifications
- Ⓒ Port thread
- Ⓓ Option
  - *2
  - *3
  - *4
  - *5
  - *6
  - *7
  - * Refer to "Pneumatic, Vacuum and Auxiliary Components (catalog No. CB-024SA)" for the explanation of the option.
- Ⓔ Display unit
- Ⓕ Pipe adaptor set (attachments)
  - *8
  - *9
- Ⓖ Other attachments

Code		Content	Ⓐ Model No. W1100	W3100	W4100	W8100
Ⓑ Port size						
6		1/8	●			
8		1/4	●	●	●	
10		3/8		●	●	
15		1/2			●	
20		3/4				●
25		1				●
Ⓒ Port thread		*10				
Blank		Rc thread	●	●	●	●
N		NPT thread	●	●	●	●
G		G thread	●	●	●	●
Ⓓ Option						
Drain discharge	Blank	Manual drain cock	●	●	●	●
	F	Auto-drain manual override (NO)		●	●	●
	F1	Auto-drain manual override (NC)		●	●	●
	FF	Large auto-drain with manual override (NO)				●
	FF1	Large auto-drain with manual override (NC)				●
Bowl material	Blank	Polycarbonate bowl	●	●	●	●
	Z	Nylon bowl	●	●	●	●
	M	Metal bowl		●	●	●
Element	Blank	5 µm	●	●	●	●
	Y	0.3 µm (submicron)		●	●	●
Pressure Range	Blank	0.05 to 0.85 MPa	●	●	●	●
	L	0.05 to 0.35 MPa	●	●	●	●
Pressure relief	Blank	With relief mechanism	●	●	●	●
	N	Non-relief	●	●	●	●
Pressure gauge	Blank	With standard pressure gauge (G401)	●	●	●	●
	T	No pressure gauge (gauge port (1/4) is assembled sealed)	●	●	●	●
	T8	Pressure gauge ready option (gauge port (1/4) is left open)	●	●	●	●
X1		IN/OUT reverse flow (right to left)	●	●	●	●
Ⓔ Display unit						
Blank		MPa display (Rc thread), psi display (NPT thread), bar display (G thread)	●	●	●	●
J1		MPa display (NPT, G thread)	●	●	●	●
Ⓕ Pipe adaptor set (attachments)		*11				
Blank		Without enclosed product	●	●	●	●
A6*W		1/8 pipe adaptor set	●			
A8*W		1/4 pipe adaptor set	●	●	●	
A10*W		3/8 pipe adaptor set	●	●	●	
A15*W		1/2 pipe adaptor set		●	●	
A20*W		3/4 pipe adaptor set			●	●
A25*W		1 pipe adaptor set				●
A32*W		1 1/4 pipe adaptor set				●
*** Adaptor thread**						
Blank		Rc thread	●	●	●	●
N		NPT thread	●	●	●	●
G		G thread	●	●	●	●
Ⓖ Other attachments		*12				
Blank		Without enclosed product	●	●	●	●
BW		C-bracket	●	●	●	●
B3W		L-bracket	●	●	●	
G49P		Pressure gauge: G49D-8-P10 (L: G49D-8-P04)	●	●	●	●
G59P		Pressure gauge: G59D-8-P10 (L: G59D-8-P04)	●	●	●	●
G40P		Pressure gauge: G40D-8-P10 (L: G40D-8-P04)	●	●	●	●

⚠ Precautions for model No. selection

*1: Refer to "Pneumatic, Vacuum and Auxiliary Components (catalog No. CB-024SA)" for specifications and attachments.

*2: Select options for the drainage, bowl material, element and regulator.
When selecting options for several items, list options in order from the top.

*3: If "L" is selected for pressure range option, a low-pressure gauge (0 to 0.4 MPa) is used.

***4: Positions of check valve and pressure gauge cannot be changed.**
If the IN and OUT directions must be reversed, indicate "X1" at the end of the option field.

*5: In the case of option code "F", the min. working pressure of the auto-drain is 0.1 MPa.
Air is purged with initial drain until pressure reaches 0.1 MPa.

*6: In the case of option code "F1", the min. working pressure of the auto-drain is 0.15 MPa.

*7: For "T", a gauge plug is assembled instead of a pressure gauge.

*8: Pipe adaptor set A*00-**-W is enclosed.

*9: The pipe adaptor set and C-bracket cannot be used together.

*10: G threads and NPT threads are available for IN, OUT, gauge port and drain outlet (metal bowl with auto-drain).

*11: The adaptor port size can be selected from Rc, NPT or G.
Blank: Rc thread, N: NPT thread, G: G thread.
(Example) A8G

*12: If NPT is selected for Ⓒ Port thread, an NPT pressure gauge is supplied. If Rc or G thread is selected, an R thread pressure gauge is supplied.

Dimensions

Same as standard products. Refer to "Pneumatic, Vacuum and Auxiliary Components (catalog No. CB-024SA)".



Regulator Standard White Series: Ozone proof

R1000-W/R2000-W/R3000-W R4000-W/R6000-W/R8000-W-P11 Series

Fluoro rubber and hydrogenated nitrile rubber, etc., used for rubber part materials.

● Port size: Rc1/8 to Rc1

JIS symbol 

RoHS CAD

How to order

R1000 - 6 ( ) - W - L P11 - ( ) - A6W BW

- Ⓐ Model No.
- Ⓑ Port size
- Ⓒ Port thread
- Ⓓ Option
  - *2
  - *3
  - *4
  - * Refer to "Pneumatic, Vacuum and Auxiliary Components (catalog No. CB-024SA)" for the explanation of the option.
- Ⓔ Display unit
- Ⓕ Pipe adaptor set (attachments)
  - *5
  - *6
- Ozone-proof specifications
- Ⓖ Other attachments

Code		Content	Ⓐ Model No. R1000	R2000	R3000	R4000	R6000	R8000
Ⓑ Port size								
6		1/8	●					
8		1/4	●	●	●	●		
10		3/8		●	●	●		
15		1/2				●		
20		3/4					●	●
25		1					●	●
Ⓒ Port thread		*7						
Blank		Rc thread	●	●	●	●	●	●
N		NPT thread	●	●	●	●	●	●
G		G thread	●	●	●	●	●	●
Ⓓ Option								
Pressure range	**Blank**	0.05 to 0.85 MPa	●	●	●	●	●	●
	L	0.05 to 0.35 MPa	●	●	●	●	●	●
Pressure relief	**Blank**	With relief mechanism	●	●	●	●	●	●
	N	Non-relief	●	●	●	●	●	●
Pressure gauge	**Blank**	With standard pressure gauge (G401)	●	●	●	●	●	●
	T	No pressure gauge (gauge port (1/4) is assembled sealed)	●	●	●	●	●	●
	T8	Pressure gauge ready option (gauge port (1/4) is left open)	●	●	●	●	●	●
X1		IN/OUT reverse flow (right to left)	●	●	●	●	●	●
Ⓔ Display unit								
Blank		MPa display (Rc thread), psi display (NPT thread), bar display (G thread)	●	●	●	●	●	●
J1		MPa display (NPT, G thread)	●	●	●	●	●	●
Ⓕ Pipe adaptor set (attachments)		*7						
Blank		Without enclosed product	●	●	●	●	●	●
A6*W		1/8 pipe adaptor set	●					
A8*W		1/4 pipe adaptor set	●	●	●	●		
A10*W		3/8 pipe adaptor set	●	●	●	●		
A15*W		1/2 pipe adaptor set		●	●	●		
A20*W		3/4 pipe adaptor set				●	●	●
A25*W		1 pipe adaptor set					●	●
A32*W		1 1/4 pipe adaptor set					●	●
*** Adaptor thread**								
Blank		Rc thread	●	●	●	●	●	●
N		NPT thread	●	●	●	●	●	●
G		G thread	●	●	●	●	●	●
Ⓖ Other attachments		*8						
Blank		Without enclosed product	●	●	●	●	●	●
BW		C-bracket	●	●	●	●	●	●
B3W		L-bracket	●	●	●	●	●	
B4W		B-bracket		●				
G49P		Pressure gauge: G49D-8-P10 (L: G49D-8-P04)	●	●	●	●	●	●
G59P		Pressure gauge: G59D-8-P10 (L: G59D-8-P04)	●	●	●	●	●	●
G40P		Pressure gauge: G40D-8-P10 (L: G40D-8-P04)	●	●	●	●	●	●

⚠ Precautions for model No. selection

*1: Refer to "Pneumatic, Vacuum and Auxiliary Components (catalog No. CB-024SA)" for specifications and attachments.
*2: When selecting options for several items, list options in order from the top.
*3: If "L" is selected for pressure range option, a low-pressure gauge (0 to 0.4 MPa) is used.
*4: For "T", a gauge plug is assembled instead of a pressure gauge.
Working temperature is 5 to 50°C.
*5: Pipe adaptor set A*00-**-W is attached.
*6: The pipe adaptor set and C-bracket cannot be used together.
*7: G and NPT threads are available for IN, OUT and gauge ports.
*8: The adaptor port size can be selected from Rc, NPT or G.
Blank: Rc thread, N: NPT thread, G: G thread.
(Example) A8G
*9: If NPT is selected for ©Port thread, an NPT pressure gauge is supplied. If Rc or G thread is selected, an R thread pressure gauge is supplied.

Dimensions

Same as standard products. Refer to "Pneumatic, Vacuum and Auxiliary Components (catalog No. CB-024SA)".



Reverse regulator Standard White Series: Ozone proof

R1100-W/R2100-W/R3100-W R4100-W/R6100-W/R8100-W-P11 Series

Fluoro rubber and hydrogenated nitrile rubber, etc., used for rubber part materials.

● Port size: Rc1/8 to Rc1

JIS symbol 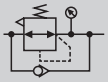

RoHS CAD

How to order

R1100 - 6 ( ) -W- L P11- ( ) - A6W BW

- R1100: Ⓐ Model No.
- 6: Ⓑ Port size
- ( ): Ⓒ Port thread
- L: Ⓓ Option (*2, *3, *4) — * Refer to "Pneumatic, Vacuum and Auxiliary Components (catalog No. CB-024SA)" for the explanation of the option.
- P11: Ozone-proof specifications
- ( ): Ⓔ Display unit
- A6W: Ⓕ Pipe adaptor set (attachments) *5 *6
- BW: Ⓖ Other attachments

Code		Content	Ⓐ Model No. R1100	R2100	R3100	R4100	R6100	R8100
Ⓑ Port size								
6		1/8	●					
8		1/4	●	●	●	●		
10		3/8		●	●	●		
15		1/2				●		
20		3/4					●	●
25		1					●	●
Ⓒ Port thread		*7						
Blank		Rc thread	●	●	●	●	●	●
N		NPT thread	●	●	●	●	●	●
G		G thread	●	●	●	●	●	●
Ⓓ Option								
Pressure range	**Blank**	0.05 to 0.85 MPa	●	●	●	●	●	●
	L	0.05 to 0.35 MPa	●	●	●	●	●	●
Pressure relief	**Blank**	With relief mechanism	●	●	●	●	●	●
	N	Non-relief	●	●	●	●	●	●
Pressure gauge	**Blank**	With standard pressure gauge (G401)	●	●	●	●	●	●
	T	No pressure gauge (gauge port (1/4) is assembled sealed)	●	●	●	●	●	●
	T8	Pressure gauge ready option (gauge port (1/4) is left open)	●	●	●	●	●	●
X1		IN/OUT reverse flow (right to left)	●	●	●	●	●	●
Ⓔ Display unit								
Blank		MPa display (Rc thread), psi display (NPT thread), bar display (G thread)	●	●	●	●	●	●
J1		MPa display (NPT, G thread)	●	●	●	●	●	●
Ⓕ Pipe adaptor set (attachments)		*8						
Blank		Without enclosed product	●	●	●	●	●	●
A6*W		1/8 pipe adaptor set	●					
A8*W		1/4 pipe adaptor set	●	●	●	●		
A10*W		3/8 pipe adaptor set	●	●	●	●		
A15*W		1/2 pipe adaptor set		●	●	●		
A20*W		3/4 pipe adaptor set				●	●	●
A25*W		1 pipe adaptor set					●	●
A32*W		1 1/4 pipe adaptor set					●	●
*** Adaptor thread**								
Blank		Rc thread	●	●	●	●	●	●
N		NPT thread	●	●	●	●	●	●
G		G thread	●	●	●	●	●	●
Ⓖ Other attachments		*9						
Blank		Without enclosed product	●	●	●	●	●	●
BW		C-bracket			●	●		
B3W		L-bracket			●	●		
B4W		B-bracket		●				
G49P		Pressure gauge: G49D-8-P10 (L: G49D-8-P04)	●	●	●	●	●	●
G59P		Pressure gauge: G59D-8-P10 (L: G59D-8-P04)	●	●	●	●	●	●
G40P		Pressure gauge: G40D-8-P10 (L: G40D-8-P04)	●	●	●	●	●	●

Precautions for model No. selection

*1: Refer to "Pneumatic, Vacuum and Auxiliary Components (catalog No. CB-024SA)" for specifications and attachments.
*2: When selecting options for several items, list options in order from the top.
*3: If "L" is selected for pressure range option, a low-pressure gauge (0 to 0.4 MPa) is used.
*4: Positions of check valve and pressure gauge cannot be changed. If the IN and OUT directions must be reversed, indicate "X1" at the end of the option field. For "T", a gauge plug is assembled instead of a pressure gauge.
*5: Pipe adaptor set A*00-**-W is enclosed.
*6: The pipe adaptor set and C-bracket cannot be used together.
*7: G and NPT threads are available for IN, OUT and gauge ports.
*8: The adaptor port size can be selected from Rc, NPT or G. Blank: Rc thread, N: NPT thread, G: G thread. (Example) A8G
*9: If NPT is selected for Ⓒ Port thread, an NPT pressure gauge is supplied. If Rc or G thread is selected, an R thread pressure gauge is supplied.

Dimensions

Same as standard products. Refer to "Pneumatic, Vacuum and Auxiliary Components (catalog No. CB-024SA)".

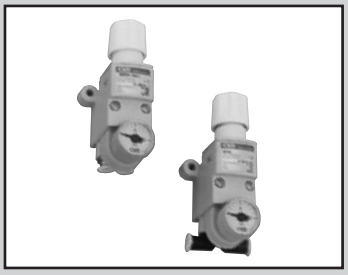

Compact regulator: Ozone proof

RB500-P11 Series

Fluoro rubber and hydrogenated nitrile rubber, etc., used for rubber part materials.

● Port size: Push-in fitting ø4, ø6

JIS symbol

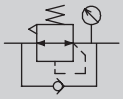

RoHS CAD

How to order

RB500 - SSC4 - P G39 P11

- RB500: Model No.
- SSC4: Ⓐ Connection
- P: Ⓑ Option
- G39: Ⓒ Pressure gauge
- P11: Ozone-proof specifications

Code			Content
Ⓐ Connection			
Direction	IN	S	Straight
		L	Elbow
	OUT	S	Straight
		L	Elbow
Bore size		C4	ø4
		C6	ø6
Ⓑ Option			
Panel Mount		Blank	Without nut
		P	With nut *3
Pressure range		Blank	0.05 to 0.7 MPa
		L	0.05 to 0.35 MPa
Pressure relief		Blank	Relief
		N	Non-relief
Ⓒ Pressure gauge			
T			No pressure gauge
Blank (Press range: Blank)			With pressure gauge (G29D-6-P10)
Blank (Pressure range: L)			With pressure gauge (G39D-6-P04)
G39			With pressure gauge (G39D-6-P10)

⚠ Precautions for model No. selection

*1: Refer to “Pneumatic, Vacuum and Auxiliary Components (catalog No. CB-024SA)” for specifications.
*2: ø21 0 to 1.0 MPa pressure gauge is standard. For low pressure, ø27 0 to 0.4 MPa low pressure gauge is provided.
*3: Indicate option code “P” for panel mounting.

Dimensions

Same as standard products. Refer to “Pneumatic, Vacuum and Auxiliary Components (catalog No. CB-024SA)”.

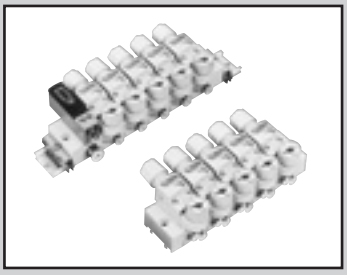

Block manifold regulator: Ozone proof

MNRB500-P11 Series

Fluoro rubber and hydrogenated nitrile rubber, etc., used for rubber part materials.

● Port size: Push-in fitting ø4, ø6, ø8

RoHS CAD

How to order

MNRB500A - SSC64 - 5 - N G39 - D P11

- Ⓐ Model No. *1
- Ⓑ Fitting
- Ⓒ Port size
- Ⓓ Station No. *2
- Ⓔ Option *3
- Ⓕ Mounting method
- Ozone-proof specifications

JIS symbol

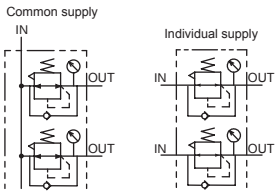

Code	Content
Ⓐ Model No.	
MNRB500A	Common supply
MNRB500B	Individual supply
Ⓑ Fitting	
IN direction	
S	Straight
L	Elbow
OUT direction	
S	Straight
L	Elbow

Ⓒ Port size IN/OUT		MNRB500A	MNRB500B
C64	IN; ø6, OUT; ø4	●	
C66	IN; ø6, OUT; ø6	●	
C84	IN; ø8, OUT; ø4	●	
C86	IN; ø8, OUT; ø6	●	
C4	IN, OUT; ø4		●
C6	IN, OUT; ø6		●

Ⓓ Station No. *3	
1	1 station
2	2 stations
⋮	⋮
10	10 stations

Ⓔ Option			MNRB500A	MNRB500B
Pressure range	**Blank**	0.05 to 0.7 MPa (pressure gauge: G29D-6-P10)	●	
	L	0.05 to 0.35 MPa (gauge: G39D-6-P04)	●	
Pressure relief	**Blank**	Relief	●	
	N	Non-relief	●	
Pressure gauge *4	**Blank**	With pressure gauge	●	
	T	Without pressure gauge (gauge port Rc 1/8)	●	
	G39	With pressure gauge (G39D-6-P10)	●	
Flow direction	**Blank**	Standard flow (left → right)	●	●
	X1	Reverse flow (right → left)	●	

Ⓕ Mounting method	
Blank	DIN rail mount
D	Direct mount

Precautions for model No. selection

*1: Refer to "Pneumatic, Vacuum and Auxiliary Components (catalog No. CB-024SA)" for specifications.
*2: The air supply block is one station.
When using three or more stations simultaneously with the common supply, increase one supply block station for every three stations.
Designate with mix manifold specifications sheet.
*3: Up to five direct mounting stations can be used.
*4: Options and pressure gauges for each regulator block are the same.
*5: ø21 0 to 1.0 MPa pressure gauge is standard.
For low pressure, ø27 0 to 0.4 MPa low-pressure gauge is provided.
*6: When other than basic model specifications, ask CKD to issue the mix manifold specifications on page 331.

Dimensions

Same as standard products. Refer to "Pneumatic, Vacuum and Auxiliary Components (catalog No. CB-024SA)".



Regulator: Ozone proof

B2019-P11 Series

Fluoro rubber or hydrogenated nitrile rubber, etc., used for rubber part materials.

● Port size: Rc1/8, Rc1/4

JIS symbol



How to order

B2019 - **1C** - **NPB** **P11**

- B2019: Model No.
- 1C: Ⓐ Port size *2
- NPB: Ⓑ Option *1 *3
- P11: Ozone-proof specifications

Code		Content
Ⓐ Port size		
1C		Rc1/8
2C		Rc1/4
Ⓑ Option		
Regulator	**Blank**	Standard
	N	Non-relief
	L	Low pressure (0.02 to 0.34 MPa)
	P	Panel mount
Attached product	**Blank**	Without enclosed product
	G	Pressure gauge
	B	Bracket

Precautions for model No. selection

*1: Refer to “Pneumatic, Vacuum and Auxiliary Components (catalog No. CB-024SA)” for specifications and attachments.

*2: If port size NPT thread is selected, do not indicate nominal size C. Example) B2019-1

*3: The pressure gauge supplied is G49D-6-P10 (G49D-6-P04 for low pressure).

Dimensions

Same as standard products. Refer to “Pneumatic, Vacuum and Auxiliary Components (catalog No. CB-024SA)”.

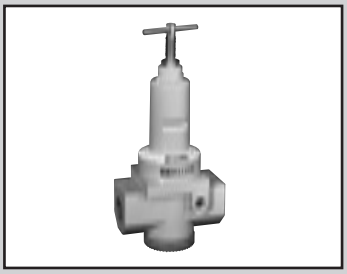

Reverse regulator (chuck valve integrated): Ozone proof

2415-P11 Series

Fluoro rubber and hydrogenated nitrile rubber, etc., used for rubber part materials.

● Port size: Rc3/4, Rc1, Rc1 1/2

JIS symbol

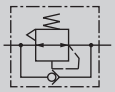

RoHS

How to order

2415 - 6C - NKG P11

- 2415: Model No.
- 6C: Ⓐ Port size *2
- NKG: Ⓑ Option *1 *3
- P11: Ozone-proof specifications

Code		Content
Ⓐ Port size		
6C		Rc3/4
8C		Rc1
10C		Rc1 1/2
Ⓑ Option		
Regulator	**Blank**	Standard
	N	Non-relief
	K	Plastic knob
Attached product	**Blank**	Without attached product
	G	Pressure gauge

⚠ Precautions for model No. selection

*1: Refer to “Pneumatic, Vacuum and Auxiliary Components (catalog No. CB-024SA)” for specifications and attachments.

*2: If port size NPT thread is required, do not indicate nominal size C. Example) 2415-6

*3: The pressure gauge supplied is G59D-8-P10 (G59D-8-P04 for low pressure).

Dimensions

Same as standard products. Refer to “Pneumatic, Vacuum and Auxiliary Components (catalog No. CB-024SA)”.

Custom order products

Available as a custom order. Contact CKD for details.

SC-M5 speed controller: Ozone-proof

- Rubber material is changed to fluoro rubber
- Port size: M5



2QV/3QV Quick Valve: Ozone-proof

- Rubber part materials changed to fluoro rubber or hydrogenated nitrile rubber, etc.
- 2- and 3-port valves are available



DSC speed controller with adjusting dial: Ozone-proof

- Rubber part materials changed to fluoro rubber or hydrogenated nitrile rubber, etc.
- Port size: Rc1/8, Rc1/4, Rc3/8, Rc1/2



International System of Units (SI units)

Conversion of SI units and conventional units

SI units (International System of Units) are used in this catalog.
Conversion for SI and conventional units are shown below.

SI unit conversion table (SI units are indicated with bold line.)

Conversion example (for pressure) 1 kgf/cm^2⇒9.80665 x 10^{-2} MPa 1 MPa ⇒1.01972 x 10 kgf/cm^2

Force

N	dyn	kgf
1	1x10^5	1.01972x10^{-1}
1x10^{-5}	1	1.01972x10^{-6}
9.80665	9.80665x10^5	1

Viscosity

Pa·s	cP	P
1	1x10^3	1x10
1x10^{-3}	1	1x10^{-2}
1x10^{-1}	1x10^2	1

Note: 1 P=1 dyn·s/cm^2 = 1 g/cm·s,
1 Pa·s = 1 N·s/m^2, 1 cP = 1 mPa·s

Stress

Pa or N/m^2	MPa or N/mm^2	kgf/mm^2	kgf/cm^2
1	1x10^{-6}	1.01972x10^{-7}	1.01972x10^{-5}
1x10^6	1	1.01972x10^{-1}	1.01972x10
9.80665x10^6	9.80665	1	1x10^2
9.80665x10^4	9.80665x10^{-2}	1x10^{-2}	1

Note: 1 Pa = 1 N/m^2, 1 MPa = 1 N/mm^2

Kinematic viscosity

m^2/s	cSt	St
1	1x10^6	1x10^4
1x10^{-6}	1	1x10^{-2}
1x10^{-4}	1x10^2	1

Note: 1 St = 1 cm^2/s, 1 cSt = 1 mm^2/s

Pressure

Pa	kPa	MPa	bar	kgf/cm^2	atm	mmH$_2$0 or mmAq	mmHg or Torr
1	1x10^{-3}	1x10^{-6}	1x10^{-5}	1.01972x10^{-5}	9.86923x10^{-6}	1.01972x10^{-1}	7.50062x10^{-3}
1x10^3	1	1x10^{-3}	1x10^{-2}	1.01972x10^{-2}	9.86923x10^{-3}	1.01972x10^2	7.50062
1x10^6	1x10^3	1	1x10	1.01972x10	9.86923	1.01972x10^5	7.50062x10^3
1x10^5	1x10^2	1x10^{-1}	1	1.01972	9.86923x10^{-1}	1.01972x10^4	7.50062x10^2
9.80665x10^4	9.80665x10	9.80665x10^{-2}	9.80665x10^{-1}	1	9.67841x10^{-1}	1x10^4	7.35559x10^2
1.01325x10^5	1.01325x10^2	1.01325x10^{-1}	1.01325	1.03323	1	1.03323x10^4	7.60000x10^2
9.80665	9.80665x10^{-3}	9.80665x10^{-6}	9.80665x10^{-5}	1x10^{-4}	9.67841x10^{-5}	1	7.35559x10^{-2}
1.33322x10^2	1.33322x10^{-1}	1.33322x10^{-4}	1.33322x10^{-3}	1.35951x10^{-3}	1.31579x10^{-3}	1.35951x10	1

Note: 1 Pa = 1 N/m^2

Work/energy/quantity of heat

J	kW·h	kgf·m	kcal
1	2.77778x10^{-7}	1.01972x10^{-1}	2.38889x10^{-4}
3.600x10^6	1	3.67098x10^5	8.6000x10^2
9.80665	2.72407x10^{-6}	1	2.34270x10^{-3}
4.18605x10^3	1.16279x10^{-3}	4.26858x10^2	1

Note: 1 J = 1 W·s, 1 J = 1 N·m 1 cal = 4.18605 J (according to the Measurement Act)

Thermal conduction ratio

W/(m·k)	kcal/(h·m·°C)
1	8.6000x10^{-1}
1.16279	1

Note: 1 cal = 4.18605 J (according to the Measurement Act)

Power (power/motivity) heat flow

W	kgf·m/s	PS	kcal/h
1	1.01972x10^{-1}	1.35962x10^{-3}	8.6000x10^{-1}
9.80665	1	1.33333x10^{-2}	8.43371
7.355x10^2	7.5x10	1	6.32529x10^2
1.16279	1.18572x10^{-1}	1.58095x10^{-3}	1

Note: 1 W = 1 J/s, PS: French horsepower
1 PS = 0.7355 kW (according to the Act for Enforcement of the Measurement Act)
1 cal = 4.18605 J (according to the Measurement Act)

Coefficient of heat transfer

W/(m^2·k)	kcal/(h·m^2·°C)
1	8.6000x10^{-1}
1.16279	1

Note: 1 cal = 4.18605 J (according to the Measurement Act)

Specific heat

J/(kg·k)	kcal/(kg·°C) cal/(g·°C)
1	2.38889x10^{-4}
4.18605x10^3	1

Note: 1 cal = 4.18605 J (according to the Measurement Act)

JIS symbols

JIS symbols used in this catalog are old symbols following JISB0125-1: 2001.
Refer to JISB0125-1: 2007 or JFPS2011: 2006 for new symbols.

	Page
1. Element of symbol	Ending 20
2. Line and port	Ending 21
3. Directional control valve	Ending 21
4. Pressure control valve	Ending 27
5. Flow rate control valve	Ending 27
6. Cylinder and motor	Ending 27
7. Power and tank	Ending 28
8. Air adjustment component	Ending 28
9. Auxiliary components and other components	Ending 29

CAD data is available.

JIS symbol list

1. Element of symbol

(a) Symbol element

Name	Symbol	Applications	Remarks
Line Continuous line		(1) Main line (2) Air supply line to pilot valve (3) Electric signal line	· Return line included · Other: Indicate the electrical code to distinguish from the pipeline.
Broken line		(1) Pilot operation line (2) Drain line (3) Filter (4) Valve switching position	· Internal pilot · External pilot
Dashed line		Surrounding line	· Surrounding line indicating unit with more than one function
Double line		Mechanical connection	· Rotary shaft, lever, piston rod, etc.
Circle Large circle		Energy converter	· Pump, compressor, electric motor, etc.
Medium circle		(1) Measuring instrument (2) Rotation fitting	
Small circle		(1) Check valve (2) Link (3) Roller	· Roller: Put a dot in the center.
Point		(1) Connection of pipeline (2) Roller axis	
Half circle		Shaft of the pump or actuator whose rotating angle is limited	
Square		(1) Fluid control components (2) Driving motor other than electric motor	· The port intersects vertically with the side.
		Fluid adjustment components	· The port intersects with the corner. · Filter, drain separator, lubricator, heat exchanger, etc.
		(1) Cushion in cylinder (2) Weight in accumulator	
Rectangle	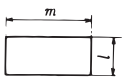	(1) Cylinder (2) Valve	· $m>l$
		Piston	
	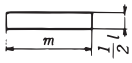	Specific operation	· $l \le m \le 2l$ · Refer to Item 3 (a)
Others Hollow (large)	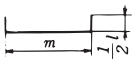	Oil tank (ventilation)	· $m>l$
Hollow (small)	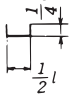	Local display of oil tank (ventilation)	
Capsule	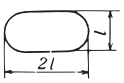	(1) Oil tank (closed) (2) Pneumatics tank (3) Accumulator (4) Auxiliary gas vessel	

(b) Functional element

Name	Symbol	Applications	Remarks
Equilateral triangle			· Fluid energy direction · Type of fluid · Energy source display
Filled in		Hydraulic pressure	
In white		Compressed air and other gas pressure	· Including exhaust to atmosphere
Arrow display Straight line or diagonal line		(1) Linear movement (2) Fluid flow path and direction in valve (3) Heat flow direction	
Curve		Rotary motion	· Arrow indicates the rotation direction viewed from shaft free end
Diagonal line		Variable operation or adjustment method	· Draw diagonal line with appropriate length · Pump, spring or variable solenoid actuator, etc.
Others		Electric	 · Use the following symbols when AC and DC identification is required 
		Closed path or closed port	Closed path Port 
		Solenoid actuator	
		Temperature instruction or adjustment	
		Driving motor	
		Spring	· Refer to Item 7 · Two-thread is preferable
		Restriction	
	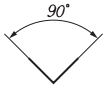	Simplified code of valve seat of check valve	

(c) Mechanical element

Name	Symbol	Remarks
Rod		· 2-direction operation · Arrow indication is optional
Rotary shaft		· 2-direction operation · Arrow indication is optional
Detent		· 2-direction operation · Vertical line on notch indicates clamp
Latch		· 1-direction operation · * Code showing how to release

Name	Symbol	Remarks
Over center mechanism		· 2-direction operation

2. Line and port
(a) Pipeline

Name	Symbol	Remarks
Connection	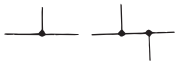	
Intersection		· Not connected
Flexible line		· Hose (normally connected to movable part)

(b) Port

Name	Symbol	Remarks
Air vent		· Air venting is continuously performed · Air venting is performed during a specific period and then the port is closed · Air venting is performed by controlling the check mechanism as necessary
Exhaust port	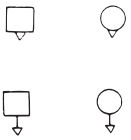	· For pneumatic pressure only · Without port · With port
Quick fitting	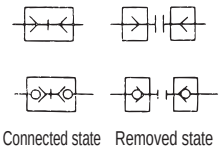	· Without check valve · With check valve (self sealant fitting)
Rotation fitting 1 line 3 line	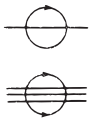	· Swivel joint and rotary joint · 1-direction rotation · 2-direction rotation

3. Directional control valve
(a) Operation

Name	No.	Symbol	Remarks
Manual control	⑩	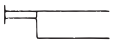	· General symbol used when the operation or the number of operating directions is not specified
Push button	⑪	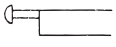	· 1-direction operation
Pull button	⑫	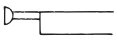	· 1-direction operation
Push/pull button	⑬		· 2-direction operation

Name	No.	Symbol	Remarks
Lever	⑭		·2-direction operation (including rotary motion)
Pedal	⑮		·1-direction operation (including rotary motion)
Double pedal	⑯		· 2-direction operation (including rotary motion)
Mechanical control plunger	⑳ ㉑		· 1-direction operation
Variable stroke length limiter	㉒		· 2-direction operation
Spring	㉓		· 1-direction operation
Roller	㉔		· 2-direction operation
Pull roller	㉕		· Arrow shows operation direction. Indication may be omitted. · 1-direction operation
Electrical control	㉚		· Solenoid, torque motor, etc.
Linear electric actuator Single acting solenoid	㉛		· 1-direction operation · Diagonal line may also run downward left-right
Double acting solenoid	㉜	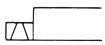	· 2-direction operation · Diagonal line may also spread upward
Single acting variable solenoid actuator	㉝	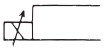	· 1-direction operation · Proportional solenoid, · Force motor, etc.
Double acting variable solenoid actuator	㉞		· 2-direction operation · Torque motor
Rotary electric actuator	㉟	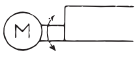	· 2-direction operation · Electric motor
Indirect electric actuator Single acting solenoid	㊱	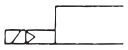	* JIS covers pilot operation, but the valve is typically used as a solenoid valve, so the transfer symbols ㊱ and ㊲ have been used for the electric operation classification.
Double acting solenoid	㊲	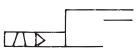	
Pilot operation Direct pilot operation	㊵	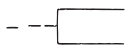	
	㊶	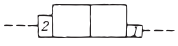	· When the pressurized area is different, indicate the values of the area ratio within the rectangle when required.
Internal pilot	㊸		· Operation flow path is provided inside the device.
External pilot	㊹		· Operation flow path is provided outside the device.

Name	No.	Symbol	Remarks
Indirect pilot operation Pressurized operation method Pneumatic pilot	㊷		· Internal pilot · No primary operation
Electromagnetic/ pneumatic pilot	㊱	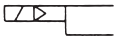	· With primary operation by single acting solenoid · Internal pilot * As this symbol generally indicates a solenoid valve, it is classified into the electrical control category and identified with a number in the ㉚s.
Electromagnetic/ pneumatic pilot with manual override	㊱ ⑩	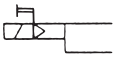	· Valve with manual override added to the above operation

(b) Directional control valve basic

No. of Ports	No. of Positions	Status of normal position	No.	Symbol	Remarks
2	2	Normally closed	Ⓐ	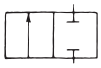	Normally closed
2	2	Normally open	Ⓑ	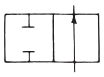	Normally open
3	2	Normally closed	Ⓒ	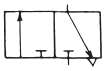	
3	2	Normally open	Ⓓ		
4	2	P/B connection	Ⓔ	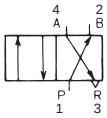 Note) Numerals are as indicated in JISB 8375 (ISO 5599).	
5	2	P/B connection	Ⓕ	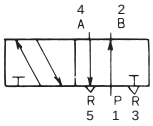	
4	3	All ports closed	Ⓖ	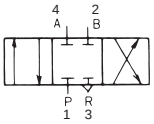	
5	3	All ports closed	Ⓗ	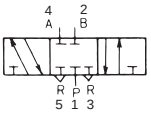	
4	3	A/B/R connection	Ⓘ	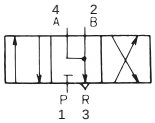	
5	3	A/B/R connection	Ⓙ	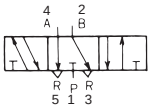	

No. of Ports	No. of Positions	Status of normal position	No.	Symbol	Remarks
4	3	P/A/B connection	Ⓚ	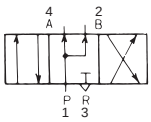	
5	3	P/A/B connection	Ⓛ	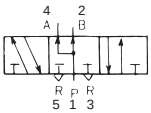 Note) Numerals are as indicated in JISB 8375 (ISO 5599).	

(c) Manual control valve

Name			Combination symbol			Symbol
Basic and operating method	No. of Ports	No. of Positions	Operation mech	Basic	Operation mech	
Direct acting normally closed push-button/ spring/return	2	2	⑪	Ⓐ	㉓	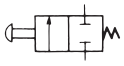
Direct acting normally open push-button/spring/ return	2	2	⑪	Ⓑ	㉓	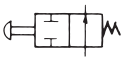
Direct acting normally closed push-button/ spring/return	3	2	⑪	Ⓒ	㉓	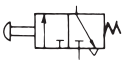
Direct acting normally open push-button/spring/ return	3	2	⑪	Ⓓ	㉓	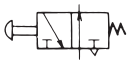
Direct acting normally closed pull button/spring/ return	2	2	⑫	Ⓐ	㉓	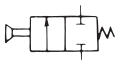
Direct acting normally open pull button/spring/ return	2	2	⑫	Ⓑ	㉓	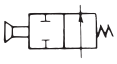
Direct acting normally closed pull button/spring/ return	3	2	⑫	Ⓒ	㉓	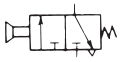
Direct acting normally open pull button/spring/ return	3	2	⑫	Ⓓ	㉓	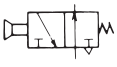
Direct acting normally closed push/pull button	2	2	⑬	Ⓐ		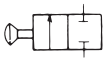
Direct acting normally open push/pull button	2	2	⑬	Ⓑ		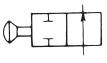
Direct acting normally closed push/pull button	3	2	⑬	Ⓒ		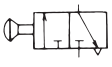
Direct acting normally open push/pull button	3	2	⑬	Ⓓ		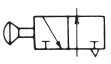

Name	No. of Ports	No. of Positions	Combination symbol			Symbol
Basic and operating method			Operation mech	Basic	Operation mech	
Direct acting normally closed lever/spring/return	2	2	⑭	Ⓐ	㉓	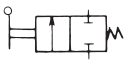
Direct acting normally open lever/spring/return	2	2	⑭	Ⓑ	㉓	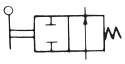
Direct acting normally closed lever/spring/return	3	2	⑭	Ⓒ	㉓	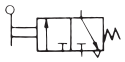
Direct acting normally open lever/spring/return	3	2	⑭	Ⓓ	㉓	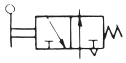
Direct acting lever with detent	2	2	⑭	Ⓐ	③	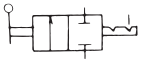
Direct acting lever with detent	3	2	⑭	Ⓒ	③	③Detent item 1 (c) ④Latch item 1 (c) Generally, key selector valve
Direct acting lever with latch	2	2	⑭	Ⓐ	④	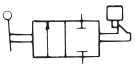
Direct acting lever with latch	3	2	⑭	Ⓒ	④	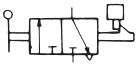
Direct acting normally closed pedal/spring/return (foot valve)	2	2	⑮	Ⓐ	㉓	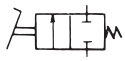
Direct acting normally open pedal/spring/return	2	2	⑮	Ⓑ	㉓	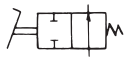
Direct acting normally closed pedal	3	2	⑮	Ⓒ	㉓	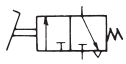
Direct acting normally open pedal	3	2	⑮	Ⓓ	㉓	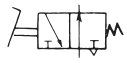
Direct acting double pedal (foot valve for both feet)	2	2	⑯	Ⓐ		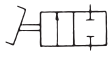
Direct acting double pedal (foot valve for both feet)	3	2	⑯	Ⓒ		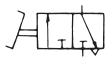
Direct acting push button spring/return	4	2	⑪	Ⓔ	㉓	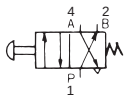
Direct acting push button spring/return	5	2	⑪	Ⓕ	㉓	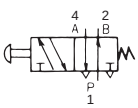

Name	No. of Ports	No. of Positions	Combination symbol			Symbol
Basic and operating method			Operation mech	Basic	Operation mech	
Direct acting both sides operation push button	4	2	⑪	Ⓔ	⑪	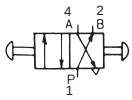
Direct acting both sides operation push button	5	2	⑪	Ⓕ	⑪	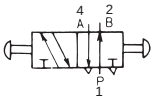
Direct acting push/pull button	4	2	⑬	Ⓔ		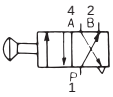
Direct acting push/pull button	5	2	⑬	Ⓕ		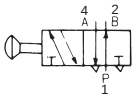
Direct acting closed center with lever/detent	4	3	⑭	Ⓖ	③	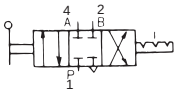
Direct acting closed center with lever/detent	5	3	⑭	Ⓗ	③	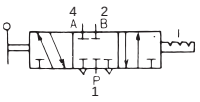
Direct acting pedal spring/return (foot valve)	4	2	⑮	Ⓔ	㉓	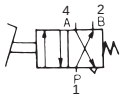
Direct acting pedal spring/return (foot valve)	5	2	⑮	Ⓕ	㉓	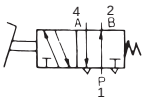
Direct acting double pedal (foot valve)	4	2	⑯	Ⓔ		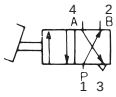
Direct acting double pedal (foot valve)	5	2	⑯	Ⓕ		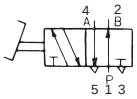
Direct acting double pedal all ports closed with detent	4	3	⑯	Ⓖ	③	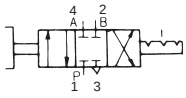
Direct acting double pedal all ports closed with detent	5	3	⑯	Ⓗ	③	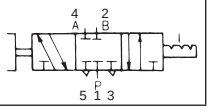

Note) Numerals are as indicated in JISB 8375 (ISO 5599).

(d) Mechanical control valve

Name	No. of Ports	No. of Positions	Combination symbol			Symbol
Basic and operating method			Operation mech	Basic	Operation mech	
Direct acting normally closed plunger spring/return	2	2	㉑	Ⓐ	㉓	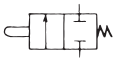
Direct acting normally open plunger spring/return	2	2	㉑	Ⓑ	㉓	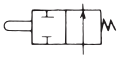

Name			Combination symbol			Symbol
Basic and operating method	No. of Ports	No. of Positions	Operation mech	Basic	Operation mech	
Direct acting normally closed plunger	3	2	㉑	Ⓒ	㉓	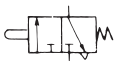
Direct acting normally open plunger	3	2	㉑	Ⓓ	㉓	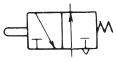
Direct acting normally closed roller spring/return	2	2	㉔	Ⓐ	㉓	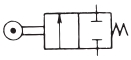
Direct acting normally open roller spring/return	2	2	㉔	Ⓑ	㉓	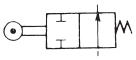
Direct acting normally closed roller spring/return	3	2	㉔	Ⓒ	㉓	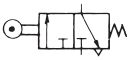
Direct acting normally open roller spring/return	3	2	㉔	Ⓓ	㉓	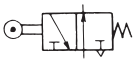
Direct acting normally closed single roller spring/return	2	2	㉕	Ⓐ	㉓	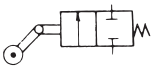
Direct acting normally open single roller spring/return	2	2	㉕	Ⓑ	㉓	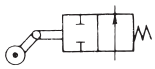
Direct acting normally closed single roller spring/return	3	2	㉕	Ⓒ	㉓	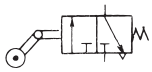
Direct acting normally open single roller spring/return	3	2	㉕	Ⓓ	㉓	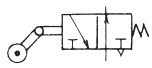

(e) Pilot operated valve

Name			Combination symbol			Symbol
Basic and operating method	No. of Ports	No. of Positions	Operation mech	Basic	Operation mech	
Direct acting pilot normally closed spring/return	2	2	㊶	Ⓐ	㉓	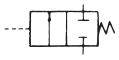
Direct acting pilot normally open spring/return	2	2	㊶	Ⓑ	㉓	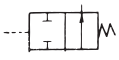
Direct acting pilot normally closed spring/return	3	2	㊶	Ⓒ	㉓	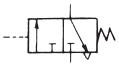
Direct acting pilot normally open pilot	3	2	㊶	Ⓓ	㉓	

Name			Combination symbol			Symbol
Basic and operating method	No. of Ports	No. of Positions	Operation mech	Basic	Operation mech	
Direct acting both sides pilot	2	2	㊶	Ⓐ	㊶	
Direct acting both sides pilot	3	2	㊶	Ⓒ	㊶	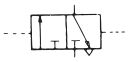
Direct acting pilot spring/return	4	2	㊶	Ⓔ	㉓	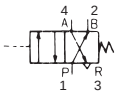
Direct acting pilot spring/return	5	2	㊶	Ⓕ	㉓	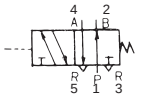
Direct acting both sides pilot	4	2	㊶	Ⓔ	㊶	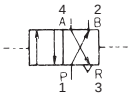
Direct acting both sides pilot	5	2	㊶	Ⓕ	㊶	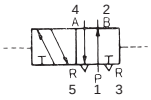
Direct acting all ports closed both sides pilot spring/center	4	3	㊶ ㉓	Ⓖ	㊶ ㉓	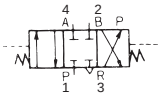
Direct acting all ports closed both sides pilot spring/center	5	3	㊶ ㉓	Ⓗ	㊶ ㉓	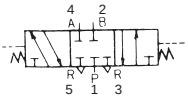
Direct acting A/B/R connection both sides pilot spring/center						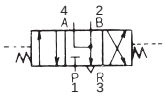
Direct acting both sides pilot A/B/R connection spring/center						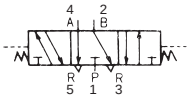
Direct acting P/A/B connection both sides pilot spring/center						* 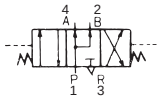
Direct acting P/A/B connection both sides pilot spring/center						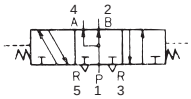
						* The basic valve's operation symbol located in the center position can be written on the diagram with a projection line from the center position of the basic valve.
						Example 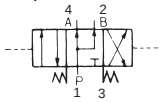
Indirect operation normally closed pilot spring/return						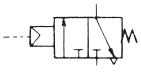

Note) Numerals are as indicated in JISB 8375 (ISO 5599).

(f) Check valve, shuttle valve, exhaust valve

Name	Combination symbol: Operation mech	Combination symbol: Basic	Combination symbol: Operation mech	Symbol (Detailed and simplified symbol)	No.
Check valve without spring	㊸	Ⓐ	㊸	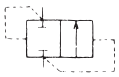 Simplified symbol 	ⓐ
Check valve with spring	㊸ ㉓	Ⓐ	㊸	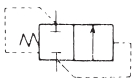 Simplified symbol 	ⓐ′
Pilot operation check valve	㊶ ㊸	Ⓐ	㊸	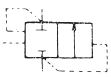 Valve is closed by external pilot Simplified symbol 	ⓑ
High pressure priority shuttle valve	㊸	Ⓒ	㊸	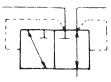 Simplified symbol 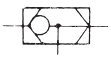	ⓒ
Low pressure priority shuttle valve				 The low pressure inlet is connected to the low-pressure priority output, and the high-pressure inlet is closed. Simplified symbol 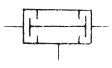	ⓓ
Quick manual valve				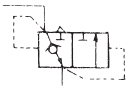 Simplified symbol 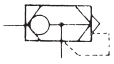	ⓔ

(g) Solenoid valve

Name: Basic and operating method	No. of Ports	No. of Positions	Combination symbol: Operation mechanism	Combination symbol: Basic	Combination symbol: Operation mechanism	Symbol
Direct acting normally closed Single acting solenoid spring/return	2	2	㉛	Ⓐ	㉓	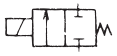
Direct acting normally open Single acting solenoid spring/return	2	2	㉛	Ⓑ	㉓	
Direct acting normally closed single acting solenoid	3	2	㉛	Ⓒ	㉓	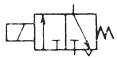
Direct acting normally open single acting solenoid	3	2	㉛	Ⓓ	㉓	
Direct acting both sides solenoid	2	2	㉛	Ⓐ	㉛	
Direct acting both sides solenoid	3	2	㉛	Ⓒ	㉛	
Direct acting double acting solenoid ㊟Use when the relationship to the electric signal need not be indicated.	3	2	㉜	Ⓒ		㊟  ㊟Position and functions of valving element are specified.
Direct acting Single acting solenoid	4	2	㉛	Ⓔ	㉓	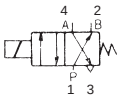
Direct acting Single acting solenoid	5	2	㉛	Ⓕ	㉓	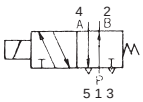
Indirect operation Single acting solenoid spring/return ㊟Pressure/return	4	2	㊱	Ⓔ	㉓ ㊸	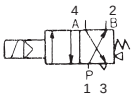
Indirect operation Single acting solenoid spring/return ㊟Pressure/return	5	2	㊱	Ⓕ	㉓	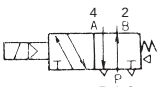 ㊟For the pressure and return operation symbols, indicate the functional element equilateral triangle at the edge.
Direct acting both sides solenoid	4	2	㉛	Ⓔ	㉛	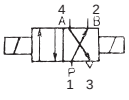

Note) Numerals are as indicated in JISB 8375 (ISO 5599).

Name	No. of Ports	No. of Positions	Combination symbol: Operation mechanism	Combination symbol: Basic	Combination symbol: Operation mechanism	Symbol
Direct acting double acting solenoid	4	2	㉜	Ⓔ		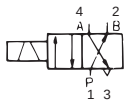 ㊟As stated above, JIS stipulates use if the relationship to the electrical signal need not be indicated. If this is clear, ㉜ can be indicated as an abbreviation of ㉛-◯-㉛.
Direct acting both sides solenoid	5	2	㉛	Ⓕ	㉛	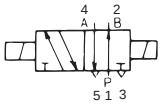
Direct acting double acting solenoid	5	2	㉜	Ⓕ		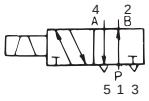
Indirect operation both sides solenoid	4	2	㊱	Ⓔ	㊱	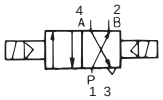
Indirect operation double acting solenoid	4	2	㊲	Ⓔ		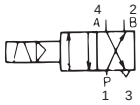
Indirect operation both sides solenoid	5	2	㊱	Ⓕ	㊱	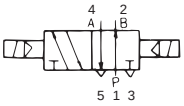
Indirect operation double acting solenoid	5	2	㊲	Ⓕ		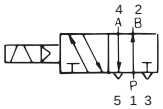
Direct acting all ports closed both sides solenoid spring/pressure centers	4	3	㉛ ㉓	Ⓖ	㉛ ㉓	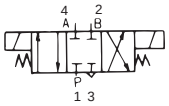
Direct acting all ports closed both sides solenoid spring/pressure centers	5	3	㉛ ㉓	Ⓗ	㉛ ㉓	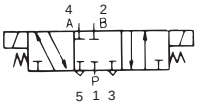
Direct acting A/B/R connection both sides solenoid spring/pressure centers	4	3	㉛ ㉓	Ⓘ	㉛ ㉓	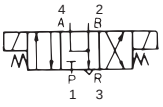
Direct acting A/B/R connection both sides solenoid spring/pressure centers	5	3	㉛ ㉓	Ⓙ	㉛ ㉓	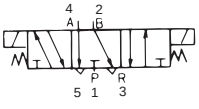
Direct acting P/A/B connection both sides solenoid spring/pressure centers	4	3	㉛	Ⓚ	㉛	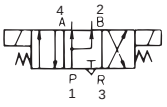

Name	No. of Ports	No. of Positions	Combination symbol: Operation mechanism	Combination symbol: Basic	Combination symbol: Operation mechanism	Symbol
Direct acting P/A/B both sides solenoid spring/pressure centers used together	5	3	㉛ ㉓㊸	Ⓛ	㉛ ㊸㉓	
Direct acting P/A/B connection both sides solenoid with manual override			㉛ ⑩ ㉓㊸	Ⓛ	㉛ ⑩ ㊸㉓	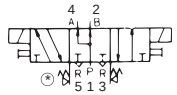 ㊟If the diagram is difficult to read when all symbols are indicated on both ends, separate symbols.
Indirect operation all ports closed both sides solenoid spring/pressure centers	4	3	㊱ ㉓	Ⓖ	㊱ ㉓	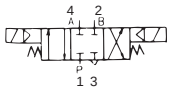
Indirect operation all ports closed both sides solenoid spring/pressure centers	5	3	㊱ ㉓㊸	Ⓗ	㊱ ㉓	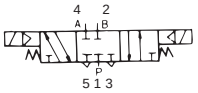
Indirect operation A/B/R connection Both sides solenoid spring/pressure centers used together	4	3	㊱ ㉓㊸	Ⓘ	㊱ ㊸㉓	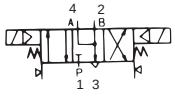
Indirect operation A/B/R connection Both sides solenoid spring/pressure centers used together	5	3	㊱ ㉓㊸	Ⓙ	㊱ ㊸㉓	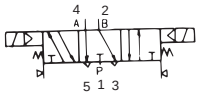
Indirect operation P/A/B connection Both sides solenoid spring/pressure center pilot with manual override	4	3	㊱ ⑩ ㉓	Ⓚ	㊱ ⑩ ㉓	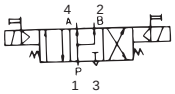
Indirect operation P/A/B connection Both sides solenoid spring/pressure center with manual override	5	3	㊱ ⑩ ㉓	Ⓛ	㊱ ⑩ ㉓	

Note) Numerals are as indicated in JISB 8375 (ISO 5599).

Name			Combination symbol			Symbol
Basic and operating method	No. of Ports	No. of Positions	Operation mechanism	Basic	Operation mechanism	
(Proportional control valve) Direct acting solenoid proportional flow rate control valve	2		㉝	Ⓐ	㉓	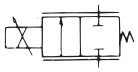
Direct acting solenoid proportional flow rate control valve	3		㉝	Ⓒ	㉓	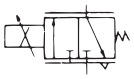
(Servo valve) Direct acting solenoid servo control spring/center	4		㉞ ㉓	Ⓖ	㉓	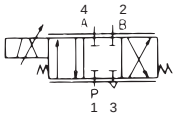
Direct acting Solenoid servo control spring/center	5		㊱ ㉓	Ⓗ	㉓	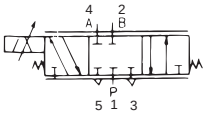

Note) Numerals are as indicated in JISB 8375 (ISO 5599).

4. Pressure control valve

Name	Symbol	Remarks
Relief valve	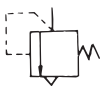	Direct acting or general symbol
Pilot operation relief valve	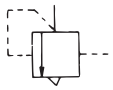	
Regulator	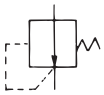	Non-relief
Regulator with relief	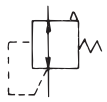	
Pilot operation regulator	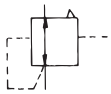	
Regulator with filter	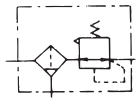	
Regulator with check valve	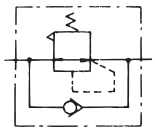	
Sequence valve	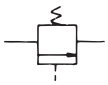	
Proportional electromagnetic pressure control valve		

5. Flow rate control valve

Name	Symbol	Remarks
Metering valve Variable metering valve	Detailed symbol Simplified symbol 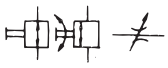	· The simplified symbols do not indicate the operation method or valve state. · Normally, there is no completely closed status
Stop valve		
Speed control valve		· Variable metering valve · One direction is free flow, while the other direction is controlled flow
Metering valve		
Metering valve with silencer	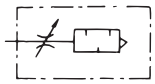	

6. Cylinder and motor

Name	Symbol	Remarks
Single acting cylinder	Detailed symbol Simplified symbol 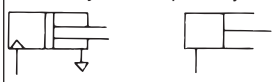	· Push type · Single rod · Exhaust to atmosphere
Single acting cylinder (with spring)	(1) (2) 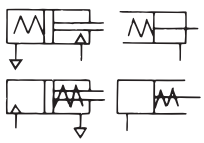	· Single rod (1) Rod pushed by spring force (2) Rod retracted by spring force
Double acting cylinder	(1) (2) 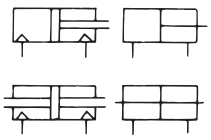	(1) Single rod (2) Double rod
Double acting telescopic cylinder	◎ 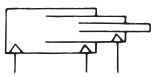	
Cylinder with adjustable stroke (head side)	◎ 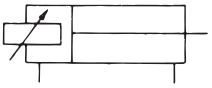	Reference In accordance with JIS B 8368 usage. In JIS B 0142:1984, the head side is the cap side and the rod side is the head side.
Cylinder with adjustable stroke (rod side)	◎ 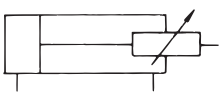	
Cylinder with speed control valve	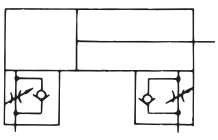	· Example of meter-out

Name	Symbol	Remarks
Cylinder with brake	◎ 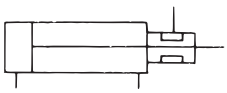	· Describe the braking method if required.
Cylinder with end lock	(1)◎ 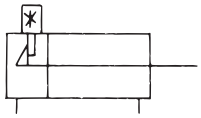 (2)◎ 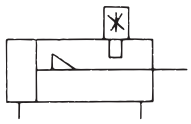	* Symbol showing how to release (1) Head side (2) Rod side Note: In accordance with JIS B 8368:1999 usage.
Cylinder with switch	◎ 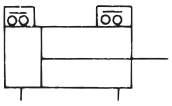	· Specify a and b contacts 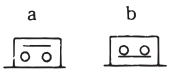
Rotation-stop cylinder	◎ 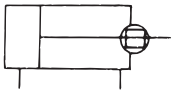	
Rodless cylinder	◎ 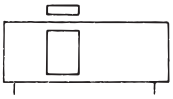	
Cylinder with valve	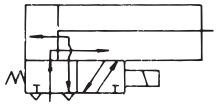	· Example of push type during energizing
Air motor	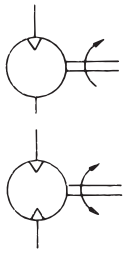	· 1-direction flow · 1 direction rotation · 2-direction flow · 2 direction rotation
Oscillating actuator	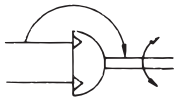	· Pneumatic pressure · Constant angle · 2-direction oscillation · Drawings of arrows to indicate relationship of the shaft rotating direction and flow direction are optional.

7. Power and tank

Name	Symbol	Remarks
Hydraulic (power) source		· General symbols
Pneumatic (power) source		· General symbols
Electric motor		

Name	Symbol	Remarks
Driving motor		(Excluding electric motor)
Air receiver		

8. Air adjustment component

Name	Symbol	Remarks
Filter	(1) 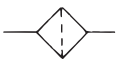 (2)  (3) 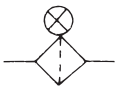	(1) General symbols (2) With magnet (3) With clogging display
Filter with drain discharger	(1)  (2) 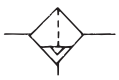	(1) Manual discharge (2) Automatic discharge
Oil mist separator	(1) 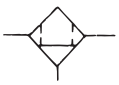 (2) 	(1) Manual discharge (2) Automatic discharge
Micro mist separator	(1) ◎  (2) ◎ 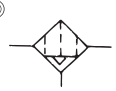 (3) ◎ 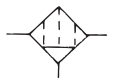	(1) Manual discharge (2) Automatic discharge (3) Deodorization filter
Drain discharger	(1)  (2) 	(1) Manual discharge (2) Automatic discharge
Air dryer		
Heat exchanger Cooler	(1)  (2)  (3) 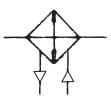	(1) Water cooling (when coolant piping path is not displayed) (2) Water cooling (when coolant piping path is displayed) (3) Air cooling

Name	Symbol	Remarks
Lubricator		All volume Selection
Pneumatic adjustment unit	Simplified symbol 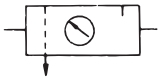 Detailed symbol 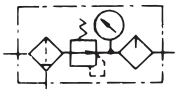	The vertical arrow indicates a discharger. Detailed symbol shows · Filter with manual exhaust valve · Non-relief regulator · An example of the all-volume lubricator
Oil mist separator for exhaust	◎ 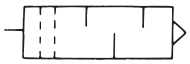	
Noise reduction device	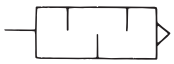	
Oil injector	◎ 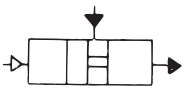	

9. Auxiliary components and other components

Name	Symbol	Remarks
Pneumatic - hydraulic converter	(1) 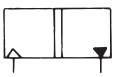 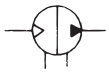	(1) Single acting (2) Continuous type
Booster	(1) 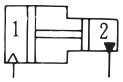 (2) 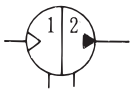	· For pressure ratio 1:2 · For Class 2 fluids (1) Single acting (2) Continuous type
Booster valve	◎ 	Pressure ratio 1:2
Delay valve	(Example) 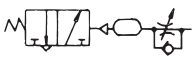	· Indicate with a compound symbol based on the mechanism
Buzzer	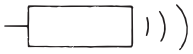	
Pressure switch	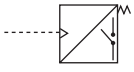	Can be indicated as follows if there is no chance for it to be misread: 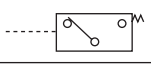

Name	Symbol	Remarks
Limit switch	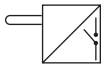	Can be indicated as follows if drawing could not be misread: 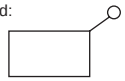
Air ejector	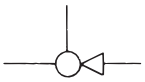	· As defined in JIS Z 8207
Pneumatic counter	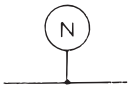	
Pressure display		· Simple display without measurement
Pressure gauge		
Differential pressure gauge		
Thermometer		
Galvanoscope		
Flow rate meter	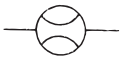	
Integrating flow gauge	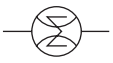	
Rotation speed gauge	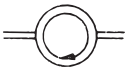	
Torque gauge	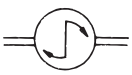	

(Refer to JISB0125-1:2001 and JPAS010)
Note: The ◎ mark indicates codes specific to JPAS010. Application is limited to those indicated.

CE Marking

CKD, with a wide range of EU Standards compliant components, supports customers' machine products to attain CE marking.



CE : Shown on EU Standards compliant products

What is CE Marking?

- CE Marking certifies that the product satisfies all EC Directive requirements to which it is applicable.
- CE Marking serves as a product passport that allows products with CE Marking to be freely distributed in EU countries.
- Machines exported to the EU must comply with Machinery Directives, EMC Directives and Low-Voltage Directives, etc. In principle, CE Marking must be indicated on the final product marketed; therefore, as a rule, built-in components do not require CE Markings. If compliance of built-in parts (CKD products) with EU Standards can be verified, CE Marking of the final product (customer's machine product) can be easily obtained.

Applicable EC Directives

CKD's main components, such as solenoid valves, sensors, and direct drive actuator, are called on to comply with the Directives below. Many models already comply with EU Standards.

Directive	Requirement	Application
Machinery Directive (2006/42/EC)	Requirements on safety for machinery	■ Machines with drive sections Components such as solenoid valves are not subject to this compliance, but the user can obtain CE Marking certification more easily by complying with Standards.
EMC Directive (2014/30/ EU)	Electromagnetic interference generation (EMI emission) and electromagnetic interference elimination performance countermeasures (EMS immunity)	■ Devices generating electromagnetic interference or affected by electromagnetic interference Solenoid valves composed of a simple solenoid are not affected by electromagnetic interference, but the user can obtain CE Marking certification more easily by complying with Standards.
Low-Voltage Directive (2014/35/EU)	Electrical safety with regard to electric shock, etc.	■ Devices operating at 50 VAC to 1000 VAC and 75 VDC to 1500 VDC
Pressure Equipment Directive (2014/68/EU)	Safety regarding the dangers of fluid energy found in pressure equipment	■ When specific criteria are exceeded within pressure equipment
Simple Pressure Vessels Directive (2014/29/ EU)	Safety with regard to vessel leakage and explosion	■ Containers welded and for which total max. working pressure and volume (PV/S) exceeds 50 bar/liter The CKD air tank (AT) does not comply with this directive, and cannot be exported to the EU.
RoHS Directive (2011/65/ EU)	Environmentally active 6 restricted substances	■ Electrical and electronics devices
2011/65/EU and (EU)2015/863	Environmentally active 10 restricted substances	■ Electrical and electronics devices

CE marking is applicable for the European Union (EU) countries and European Free Trade Association (EFTA) countries, in addition to Turkey.

CKD product conformity to EU standards

⚠ Depending on specifications and detailed model No. combinations, compatible parts may not be available. Contact your CKD Sales Representative for details.
Visit our website for the latest information.
Website address https://www.ckd.co.jp/english/support/eu/

CKD RoHS Compliance

CKD's target is to develop environmentally friendly products.

RoHS

RoHS is the abbreviation for Restriction Of the use of certain Hazardous Substances in electrical and electronic equipment.
This is the directive prohibiting use of certain hazardous substances issued by the EU.



- CKD products are approved as in conformity to RoHS directive in order of priority from July 1, 2006.
- RoHS-compliant products are designed to reduce environmental load and can be distributed in the EU countries.

CKD Environment Policy

Based on the CKD Environment Policy enacted in 2001, CKD has been promoting company-wide environment management activities to protect the global environment.

CKD Environment Policy

1. Development and sales of low-environmental load products
2. Reduction of environmental pollutants
3. Promotion of energy and resource saving
4. Reduction of waste

CKD's Compliance with RoHS

From July 2006, we have sequentially enforced RoHS compliance of our key products.
These products are indicated with the "RoHS-compliant" mark in this manual.

(Note) Check our website for the latest Statuses.

Technical data

RoHS Directive

(Directive 2011/65/EU of 27 January 2003 on the restriction of the use of certain hazardous substances in electrical and electronic equipment)

This directive assimilates laws related to limiting the use of hazardous substances in electrical and electronics components set forth by each EU member state, contributes to the protection of human health, and provides sufficient means for processing and recycling waste electrical and electric products.

1 Scope of application

1. Large appliances
2. Small appliances
3. IT equipment and telecommunications equipment
4. Consumer equipment
5. Lighting equipment
6. Electric tools
7. Toys, leisure goods and sporting equipment
8. Medical equipment and in-vitro diagnostic medical equipment
9. Monitoring and control equipment, industrial monitoring and control equipment
10. Vending machines
11. Other electrical and electronic equipment not in the above categories

Our equipment products mainly correspond to category 9: Industrial monitoring and control equipment.
(Some category 8 medical devices and non-applicable products are available)

2 Objective

Restricted substances 2011/65/EU

- Lead, mercury, cadmium, hexavalent chromium, polybrominated biphenyls (PBBs)
- Polybrominated diphenyl ethers (PBDEs)

Substances subject to additional regulation ((EU)2015/863)

- Specified phthalates (DEHP,DBP,BBP,DIBP)

As a general rule, categories 8 and 9 electrical and electronic equipment containing any of the above may not be brought into the EU from July 22, 2021 on, and those in other categories likewise from July 22, 2019 on.

ISO9001/ISO14001 Certification

Providing safe quality, friendly to users, machines and environment.

CKD has acquired International Standard ISO9001 and ISO14001 certification and structured a quality and environment management system.
With safety, environment and energy conservation as our most important priorities, we are working company-wide to promote safe product and quality creation friendly to users, machines, society and the global environment.





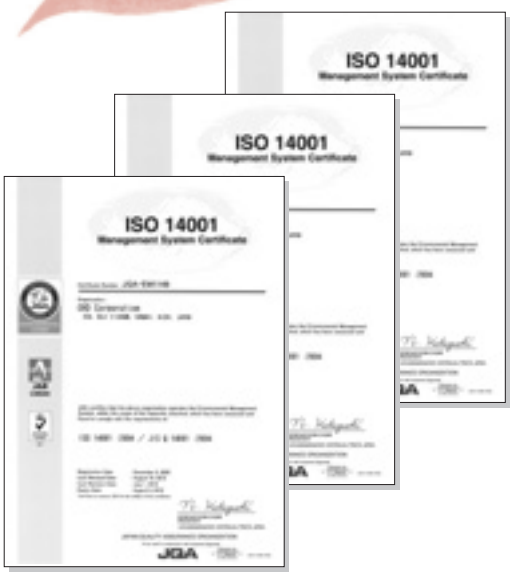

International Standard ISO9001 Certification

International Standard for quality management systems.

CKD's production division acquired certification in 1994, and all CKD divisions, including the sales division, acquired certification in 2007.

Approach to quality system

To respond to diverse product needs, CKD develops user-friendly products individualized for each industry. We conduct quality management activities to increase customer satisfaction.



International Standard ISO14001 Certification

International Standard for environment management systems. CKD's production division acquired certification in 2000, and all CKD divisions, including the sales division, acquired certification in 2003.

Approach to environment and energy conservation

CKD is aware that preserving the global environment is an utmost priority. We conduct environmental management activities based on the CKD Environment Policy.

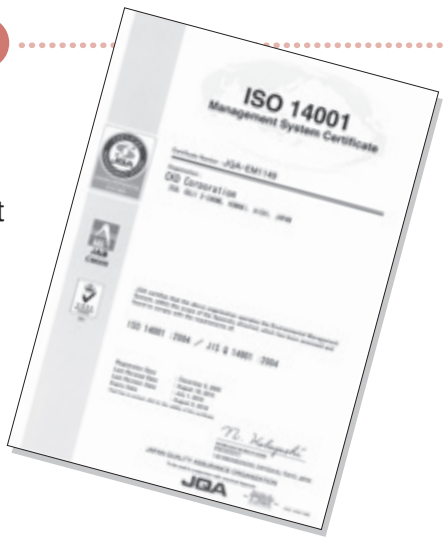

MEMO

MEMO

MEMO

MEMO

MEMO

MEMO

MEMO

MEMO

MEMO

MEMO

MEMO

MEMO

Model No. [index in alphabetical order]

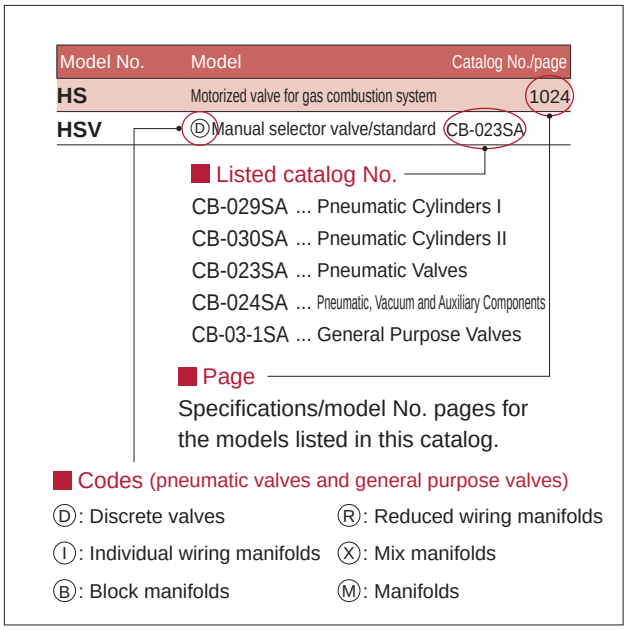

Model No.	Model	Catalog No./page
1		
1219	Micro alescer/micro naught (oil removal)	CB-024SA
1238	Micro alescer/micro naught (oil removal)	CB-024SA
1326	Heavy duty air filter	CB-024SA
1126 -*-*Y	Submicron air filter (for tar removal)	CB-024SA
1126-*-E	Air filter	CB-024SA
1138 -*-*Y	Submicron air filter (for tar removal)	CB-024SA
1138-*-E	Air filter	CB-024SA
1226 (J)	Micro alescer/micro naught (oil removal)	CB-024SA
1226 (J) -*-X	Micro alescer/odor naught (odor removal)	CB-024SA
1238-*-X	Micro alescer/odor naught (odor removal)	CB-024SA
1326 -*-*Y	Submicron air filter (for tar removal)	CB-024SA
2		
2215	Regulator	CB-024SA
2216	Regulator	CB-024SA
2302 to 2304-*C	Dial air regulator	CB-024SA
2302 to 2304-*C-R	Remote dial air regulator	CB-024SA
2415	Reverse regulator (check valve integrated)	CB-024SA
2419	Reverse regulator (check valve integrated)	CB-024SA
2619	Regulator	CB-024SA
2QV	Quick valve with push-in fitting	CB-024SA
3		
3003E to 3005E	Lubricator/econo-mist	CB-024SA
3003E-*C-V	Lubricator/auto-fill	CB-024SA
3GA1/2/3	ⒹPilot operated 3-port valve/ body piping	12
3GA1/2/3	ⒹPilot operated 3-port valve (Master valve)/body piping	324
3GB1/2	ⒹPilot operated two 3-port valves integrated/base piping	60
3GD1/2/3	ⒹPilot operated 3-port valve/ body piping	442
3GD1/2*0EJ	ⒹIntrinsically safe explosion-proof pilot operated 3-port valve/body piping	1700
3GE1/2	ⒹPilot operated two 3-port valves integrated/base piping	482
3GE1/2*0EJ	ⒹIntrinsically safe explosion-proof pilot operated 3-port valve/base piping	1720
3KA1	ⒹPilot operated 3-port valve/ body piping	1264
3KA1	ⒹPilot operated 3-port valve (Master valve)/body piping	1350
3MA0	ⒹDirect acting 3-port valve/ body piping	1594
3MB0	ⒹDirect acting 3-port valve/ sub-plate piping	1596
3PA1/2	ⒹDirect acting 3-port valve/ body piping	1612
3PB1/2	ⒹDirect acting 3-port valve/ sub-plate piping	1620
3QB1	ⒹDirect acting 3-port valve/ sub-plate piping	1552
3QE1	ⒹDirect acting 3-port valve/ sub-plate piping	1546
3QRA1	ⒹDirect acting 3-port valve/ body piping	1558
3QRB1	ⒹDirect acting 3-port valve/ sub-plate piping	1558
3QV	Quick valve with push-in fitting	CB-024SA

4

4001, 4002	Desiccant air dryer/ manual air dryer	CB-024SA
46011	Urethane tube	CB-024SA
4F0/1/2/3	ⒹPilot operated 5-port valve/ body piping	1372
4F0/1/2/3	ⒹPilot operated 5-port valve (Master valve)/body piping	1454
4F2/3	ⒹPilot operated 5-port valve, outdoor type	1400
4F30EX**	ⒹExplosion-proof pilot operated 5-port valve/body piping	1782
4F30E**	ⒹExplosion-proof pilot operated 5-port valve/body piping	1810
4F4/5/6/7	ⒹPilot operated 5-port valve/ sub-plate piping	1386
4F4/5/6/7	ⒹPilot operated 5-port valve (Master valve)/sub-plate piping	1454
4F4/5/6/ 70EX**	ⒹExplosion-proof pilot operated 5-port valve/body piping	1782
4F4/5/6/ 70E**	ⒹExplosion-proof pilot operated 5-port valve/sub-plate piping	1824
4GA1/2/3	ⒹPilot operated 5-port valve/ body piping	12
4GA1/2/3	ⒹPilot operated 5-port valve (Master valve)/body piping	324
4GA4	ⒹPilot operated 5-port valve/ body piping	704
4GB1/2/3	ⒹPilot operated 5-port valve/ base piping	60
4GB1/2/3	ⒹPilot operated 5-port valve (Master valve)/base piping	334
4GB4	ⒹPilot operated 5-port valve/ base piping	716
4GD1/2/3	ⒹPilot operated 5-port valve/ body piping	442
4GD1/2/3/4*0EJ	ⒹIntrinsically safe explosion-proof pilot operated 5-port valve/body piping	1700
4GE1/2/3	ⒹPilot operated 5-port valve/ base piping	482
4GE1/2/3/4*0EJ	ⒹIntrinsically safe explosion-proof pilot operated 5-port valve/base piping	1720
4KA1/2/3/4	ⒹPilot operated 5-port valve Body piping	1264
4KA1/2/3/4	ⒹPilot operated 5-port valve (Master valve)/body piping	1350
4KB1/2/3/4	ⒹPilot operated 5-port valve/ sub-plate piping	1282
4KB1/2/3/4	ⒹPilot operated 4, 5-port valve (Master valve)/sub-plate piping	1356
4SA0	ⒹPilot operated 5-port valve/ body piping	1236
4SB0	ⒹPilot operated 5-port valve/ sub-plate piping	1236

5

5100-4C	Heavy duty drain	CB-024SA

6

6119	Moisture indicator	CB-024SA

A

A	Marine cable gland	CB-03-1SA
A100 to 800-W	Piping adapter/Standard White Series	CB-024SA
A101 to 801-W	Radial piping adapter/Standard White Series	CB-024SA
A1019	Air filter	CB-024SA
A1338	Heavy duty air filter	CB-024SA
A1338-*Y	Submicron air filter (for tar removal)	CB-024SA
A2-3400	Ultra-low temperature 2-port solenoid valve	CB-03-1SA
A2-5201	Direct acting 2-port solenoid valve (for high frequency of use)	CB-03-1SA
A2-5202	Pilot operated 2-port solenoid valve (for high frequency of use)	CB-03-1SA
A2-5800	Ultra-low temperature 2-port solenoid valve	CB-03-1SA
A2-6500	Proportional control valve	CB-03-1SA
A3019	Lubricator/econo-mist	CB-024SA
AB21	Direct acting 2-port solenoid valve (General purpose)	CB-03-1SA
AB31	Direct acting 2-port solenoid valve, single unit (General purpose)	CB-03-1SA
AB31-Z	Direct acting 2-port solenoid valve for dry air (General purpose)	CB-03-1SA
AB41	Direct acting 2-port solenoid valve, single unit (General purpose)	CB-03-1SA
AB41E2	Explosion-proof direct acting 2-port solenoid valve (General purpose)/d2G2	CB-03-1SA

Model No. [index in alphabetical order]

Model No.	Model	Catalog No./page
A		
AB41E4	Explosion-proof direct acting 2-port solenoid valve (General purpose)/d2G4	CB-03-1SA
AB41E4-Z	Explosion-proof direct acting 2-port solenoid valve for dry air (General purpose)/d2G4	CB-03-1SA
AB41EX2	Explosion-proof direct acting 2-port solenoid valve (General purpose)/Exd II BT2	CB-03-1SA
AB41EX4	Explosion-proof direct acting 2-port solenoid valve (General purpose)/Exd II BT4	CB-03-1SA
AB41-Z	Direct acting 2-port solenoid valve for dry air (General purpose)	CB-03-1SA
AB42	Direct acting 2-port solenoid valve, single unit (General purpose)	CB-03-1SA
AB42E4	Explosion-proof direct acting 2-port solenoid valve (General purpose)/d2G4	CB-03-1SA
AB71	Direct acting 2-port solenoid valve (General purpose)/Large bore size	CB-03-1SA
ABP	Air booster	CB-024SA
AD11	Pilot operated 2-port solenoid valve (General purpose)/diaphragm drive	CB-03-1SA
AD11E4	Explosion-proof pilot operated 2-port solenoid valve (General purpose)/diaphragm drive/d2G4	CB-03-1SA
AD11EX4	Explosion-proof pilot operated 2-port solenoid valve (General purpose)/diaphragm drive/Exd II BT4	CB-03-1SA
AD12	Pilot operated 2-port solenoid valve (General purpose)/diaphragm drive	CB-03-1SA
AD12E4	Explosion-proof pilot operated 2-port solenoid valve (General purpose)/diaphragm drive/d2G4	CB-03-1SA
AD21	Pilot operated 2-port solenoid valve (General purpose)/diaphragm drive	CB-03-1SA
AD21E4	Explosion-proof pilot operated 2-port solenoid valve (General purpose)/diaphragm drive/d2G4	CB-03-1SA
AD21EX4	Explosion-proof pilot operated 2-port solenoid valve (General purpose)/diaphragm drive/Exd II BT4	CB-03-1SA
AD22	Pilot operated 2-port solenoid valve (General purpose)/diaphragm drive	CB-03-1SA
AD22E4	Explosion-proof pilot operated 2-port solenoid valve (General purpose)/diaphragm drive/d2G4	CB-03-1SA
ADK11	Pilot kick operated 2-port solenoid valve (General purpose)/diaphragm drive	CB-03-1SA
ADK11-W	Pilot kick operated 2-port solenoid valve (General purpose)/diaphragm drive/Outdoor Series	CB-03-1SA
ADK11E4	Explosion-proof pilot kick operated 2-port solenoid valve (General purpose)/diaphragm drive/d2G4	CB-03-1SA
ADK11EX4	Explosion-proof pilot operated 2-port solenoid valve (General purpose)/diaphragm drive/Exd II BT4	CB-03-1SA
ADK11-Z	Pilot kick 2-port solenoid valve for dry air (General purpose)	CB-03-1SA
ADK12	Pilot kick operated 2-port solenoid valve (General purpose)/diaphragm drive	CB-03-1SA
ADK12E4	Explosion-proof pilot kick operated 2-port solenoid valve (General purpose)/diaphragm drive/d2G4	CB-03-1SA
ADK21	Pilot kick operated 2-port solenoid valve (General purpose)/diaphragm drive	CB-03-1SA
AF2-P**	Medium main line filter/solids/oil removal filter	CB-024SA
AF2-M**	Medium main line filter/high performance solids/oil removal filter	CB-024SA
AF2-X**	Medium main line filter/odor removal filter	CB-024SA
AF3016M to 3256M	Large main line filter (popular)/High-performance oil removing filter	CB-024SA
AF3016P to 3256P	Large main line filter (popular)/Pre-filter	CB-024SA
AF3016S to 3256S	Large main line filter (popular)/Oil removing filter	CB-024SA
AF3016X to 3256X	Large main line filter (popular)/Activated carbon filter	CB-024SA
AF4004M to AF4020M	Medium main line filter (oil-prohibited)/High-performance oil removing filter	CB-024SA
AF4004P to AF4020P	Medium main line filter (oil-prohibited)/Pre-filter	CB-024SA
AF4004S to AF4020S	Medium main line filter (oil-prohibited)/Solid removing filter	CB-024SA
AF4004X to AF4020X	Medium main line filter (oil-prohibited)/Odor removal filter	CB-024SA
AF5016M to 5256M	Large main line filter (oil-prohibited)/High-performance oil removing filter	CB-024SA
AF5016P to 5256P	Large main line filter (oil-prohibited)/Pre-filter	CB-024SA
AF5016S to 5256S	Large main line filter (oil-prohibited)/Oil removing filter	CB-024SA
AF5016X to 5256X	Large main line filter (oil-prohibited)/Activated carbon filter	CB-024SA
AG3*-Z	Direct acting 3-port solenoid valve for dry air (General purpose)	CB-03-1SA
AG31	Direct acting 3-port solenoid valve, single unit (General purpose)	CB-03-1SA
AG33	Direct acting 3-port solenoid valve, single unit (General purpose)	CB-03-1SA

AG34	Direct acting 3-port solenoid valve, single unit (General purpose)	CB-03-1SA
AG4*E4-Z	Explosion-proof direct acting 3-port solenoid valve for dry air (General purpose)/d2G4	CB-03-1SA
AG4*-Z	Direct acting 3-port solenoid valve for dry air (General purpose)	CB-03-1SA
AG41	Direct acting 3-port solenoid valve, single unit (General purpose)	CB-03-1SA
AG41E4	Explosion-proof direct acting 3-port solenoid valve (General purpose)/d2G4	CB-03-1SA
AG41EX4	Explosion-proof direct acting 3-port solenoid valve (General purpose)/Exd II BT4	CB-03-1SA
AG43	Direct acting 3-port solenoid valve, single unit (General purpose)	CB-03-1SA
AG43E4	Explosion-proof direct acting 3-port solenoid valve (General purpose)/d2G4	CB-03-1SA
AG43EX4	Explosion-proof direct acting 3-port solenoid valve (General purpose)/Exd II BT4	CB-03-1SA
AG44	Direct acting 3-port solenoid valve, single unit (General purpose)	CB-03-1SA
AG44E4	Explosion-proof direct acting 3-port solenoid valve (General purpose)/d2G4	CB-03-1SA
AG44EX4	Explosion-proof direct acting 3-port solenoid valve (General purpose)/Exd II BT4	CB-03-1SA
AGD0*R	Air operated valve for process gas	CB-03-1SA
AGD1/2*R	Air operated valve for process gas	CB-03-1SA
AHB	Air hydraulic booster	CB-029SA
AL	Air lamp/logic valve	CB-024SA
AM4F0	Ⓘ Pilot operated 5-port valve/body piping	1410
AMD	Air operated valve for chemical liquids (2-port)	CB-03-1SA
AMD0*3R	Air operated valve for chemical liquids (2-port)	CB-03-1SA
AMD3*3R	Air operated valve for chemical liquids (2-port)	CB-03-1SA
AMD4*3R	Air operated valve for chemical liquids (2-port)	CB-03-1SA
AMD5*3R	Air operated valve for chemical liquids (2-port)	CB-03-1SA
AMD2**	Air operated valve for chemical liquids (2-port)	CB-03-1SA
AMDS	Air operated valve for chemical liquids/drip prevention valve integrated	CB-03-1SA
AMDZ*3R	Air operated valve for chemical liquids (2-port)	CB-03-1SA
AMG	Air operated valve for chemical liquids (3-port)	CB-03-1SA
AMGZ03R	Air operated valve for chemical liquids (3-port valve)	CB-03-1SA
AMS	Drip prevention valve for chemical liquids	CB-03-1SA
AP11	Pilot operated 2-port solenoid valve (General purpose)/Piston drive	CB-03-1SA
AP11E2	Explosion-proof pilot operated 2-port solenoid valve (General purpose)/piston drive/d2G2	CB-03-1SA
AP11E4	Explosion-proof pilot operated 2-port solenoid valve (General purpose)/piston drive/d2G4	CB-03-1SA
AP11EX2	Explosion-proof pilot operated 2-port solenoid valve (General purpose)/piston drive/Exd II BT2	CB-03-1SA
AP11EX4	Explosion-proof pilot operated 2-port solenoid valve (General purpose)/piston drive/Exd II BT4	CB-03-1SA
AP12	Pilot operated 2-port solenoid valve (General purpose)/Piston drive	CB-03-1SA
AP12E2	Explosion-proof pilot operated 2-port solenoid valve (General purpose)/piston drive/d2G2	CB-03-1SA
AP12E4	Explosion-proof pilot operated 2-port solenoid valve (General purpose)/piston drive/d2G4	CB-03-1SA
AP21	Pilot operated 2-port solenoid valve (General purpose)/Piston drive	CB-03-1SA
AP21E2	Explosion-proof pilot operated 2-port solenoid valve (General purpose)/piston drive/d2G2	CB-03-1SA
AP21EX2	Explosion-proof pilot operated 2-port solenoid valve (General purpose)/piston drive/Exd II BT2	CB-03-1SA
AP21E4	Explosion-proof pilot operated 2-port solenoid valve (General purpose)/piston drive/d2G4	CB-03-1SA
AP21EX4	Explosion-proof pilot operated 2-port solenoid valve (General purpose)/piston drive/Exd II BT4	CB-03-1SA
AP22	Pilot operated 2-port solenoid valve (General purpose)/Piston drive	CB-03-1SA
AP22E2	Explosion-proof pilot operated 2-port solenoid valve (General purpose)/piston drive/d2G2	CB-03-1SA
AP22E4	Explosion-proof pilot operated 2-port solenoid valve (General purpose)/piston drive/d2G4	CB-03-1SA
APA1	Pel system/Switching element	CB-024SA
APA3	Pel system/switching element/manifold	CB-024SA
APA4	Pel system/detection nozzle	CB-024SA
APA6	Piping instrument/air sensor	CB-024SA
APE	Mechanical pressure switch	CB-024SA

■ Listed catalog No.

CB-029SA : Pneumatic Cylinders I
CB-030SA : Pneumatic Cylinders II
CB-023SA : Pneumatic Valves
CB-024SA : Pneumatic, Vacuum and Auxiliary Components
CB-03-1SA : General Purpose Valves

■ Codes (pneumatic valves and general purpose valves)

Ⓓ : Discrete valves
Ⓡ : Reduced wiring manifolds
Ⓘ : Individual wiring manifolds
Ⓧ : Mix manifolds
Ⓑ : Block manifolds
Ⓜ : Manifolds

Model No. [index in alphabetical order]

Model No.	Model	Catalog No./page
A		
APK11	Pilot kick 2-port solenoid valve (General purpose)/Piston drive	CB-03-1SA
APK21	Pilot kick 2-port solenoid valve (General purpose)/Piston drive	CB-03-1SA
APS	Compact mechanical pressure switch	CB-024SA
AT	Air tank	CB-024SA
AVB3**	Air operated valve for high vacuum	CB-03-1SA
AVB7**	Air operated valve for high vacuum	CB-03-1SA
AZ	Tube cutter	CB-024SA
B		
B	Booster	CB-029SA
B*P51*	Ⓘ Pilot operated 2, 3, 5-port valve/ Metal base	1654
B110 to 820-W	Bracket/for F.R.L./Standard White Series	CB-024SA
B2019	Regulator	CB-024SA
B512*	Ⓓ Pilot operated 2-port valve/ sub-base	1638
B513*	Ⓓ Pilot operated 3-port valve/ sub-base	1638
B5142	Ⓓ Pilot operated 5-port valve/ sub-base	1638
B6061	Relief valve	CB-024SA
B7019	F.R. unit	CB-024SA
BBS-A	Balancer unit, automatic pressure adjustment	CB-030SA
BBS-O	Balancer unit, fixed pressure adjustment	CB-030SA
BHA	Compact cross roller parallel hand	CB-030SA
BHA-FC	Mechanical hand	CB-030SA
BHA-LN	Length measuring sensor with hand/With sensor crossover roller parallel hand	CB-030SA
BHE	Centering hand	CB-030SA
BHE-LN	Length measuring sensor with hand/ With sensor Centering hand	CB-030SA
BHG	Compact cross roller parallel hand with rubber cover	CB-030SA
BHG-LN	Length measuring sensor with hand/With sensor with rubber cover crossover roller parallel hand	CB-030SA
BN	Air blow nozzle General	CB-024SA
BNB	Air blow nozzle Blower specification	CB-024SA
BNE-F	Air blow nozzle Flat type	CB-024SA
BNE-R	Air blow nozzle Round	CB-024SA
BSA2	Miniature cross roller parallel hand	CB-030SA
BW7019	Filter/regulator for outdoor use	CB-024SA
C		
C1000 to 8000-P6	F.R.L. combination/copper and PTFE free series	CB-024SA
C1000 to 8000-W	F.R.L. combination/Standard White Series	CB-024SA
C1010 to 8010-W	W.L. combination/Standard White Series	CB-024SA
C1020 to 8020-W	F.R. combination/Standard White Series	CB-024SA
C1030 to 8030-W	F.M.R. combination/Standard White Series	CB-024SA
C1040 to 8040-W	W.M. combination/Standard White Series	CB-024SA
C1050 to 8050-W	R.M. combination/Standard White Series	CB-024SA
C1060 to 8060-W	F.M. combination/Standard White Series	CB-024SA
C25N-B	Governor for medium pressure gas	CB-03-1SA
C3070 to 8070-W	F.F.M. combination/Standard White Series	CB-024SA
CAC4	Clamp cylinder/double acting/single rod	CB-030SA
CAC4-G4	Clamp cylinder/Double acting/ anti-spatter adherence	CB-030SA
CAC-N32/40	Lightweight clamp cylinder/ Double acting/single rod	CB-030SA
CAT	Cartridge cylinder/single acting, push type	CB-029SA
CAU30	Clean air unit	CB-024SA
CAV2	Cylinder with valve/ With valve/double acting/lubrication	CB-029SA
CAV2-N	Cylinder with valve/With valve/ double acting/no-lubrication	CB-029SA
CCH	Coolant check valve	CB-03-1SA
CG	Fiber tube push-in fitting (clean-room)	CB-024SA
CHB	Air operated 2-port ball valve (compact rotary valve)/double acting	CB-03-1SA
CHBF	Air operated 2-port ball valve (compact rotary valve) /Double acting/full bore	CB-03-1SA
CHBF-R*	Air operated 2-port ball valve (compact rotary valve) /Single acting/full bore	CB-03-1SA
CHBF-V*	Air operated 2-port ball valve (compact rotary valve) /With solenoid valve/double acting/full bore	CB-03-1SA
CHBF-X*	Air operated 2-port ball valve (compact rotary valve) /With solenoid valve/single acting/full bore	CB-03-1SA
CHB-R*	Air operated 2-port ball valve (compact rotary valve) /single acting	CB-03-1SA

APK11	Pilot kick operated 2-port solenoid valve (General purpose)/Piston drive	CB-03-1SA
APK21	Pilot kick operated 2-port solenoid valve (General purpose)/Piston drive	CB-03-1SA
APS	Reed switch compact mechanical pressure switch	CB-024SA
AT	Air tank	CB-024SA
AVB3**	Air operated valve for high vacuum	CB-03-1SA
AVB7**	Air operated valve for high vacuum	CB-03-1SA
AZ	Tube cutter	CB-024SA

B

B	Booster	CB-029SA
B*P51*	Ⓘ Pilot operated 2, 3, 5-port valve/metal base	1654
B110 to 820-W	Bracket/for modular F.R.L./ Standard White Series	CB-024SA
B2019	Regulator	CB-024SA
B512*	Ⓓ Pilot operated 2-port valve/ sub-base	1638
B513*	Ⓓ Pilot operated 3-port valve/ sub-base	1638
B5142	Ⓓ Pilot operated 5-port valve/ sub-base	1638
B6061	Relief valve	CB-024SA
B7019	F.R. unit	CB-024SA
BBS-A	Balancer unit, automatic pressure adjustment	CB-030SA
BBS-O	Balancer unit, fixed pressure adjustment	CB-030SA
BHA	Compact cross roller parallel hand	CB-030SA
BHA-FC	Mechanical hand	CB-030SA
BHA-LN	Hand with length measuring sensor/ Cross roller parallel hand with sensor	CB-030SA
BHE	Centering hand	CB-030SA
BHE-LN	Hand with length measuring sensor/Centering hand with sensor	CB-030SA
BHG	Compact cross roller parallel hand with rubber cover	CB-030SA
BHG-LN	Hand with length measuring sensor/Rubber covered cross roller parallel hand with sensor	CB-030SA
BN	Air blow nozzle General	CB-024SA
BNB	Air blow nozzle Blower specification	CB-024SA
BNE-F	Air blow nozzle Flat	CB-024SA
BNE-R	Air blow nozzle Round	CB-024SA
BSA2	Miniature cross roller parallel hand	CB-030SA
BW7019	Filter/Regulator Outdoor Series	CB-024SA

C

C1000 to 8000-P6	F.R.L. combination/copper and PTFE free series	CB-024SA
C1000 to 8000-W	F.R.L. combination/Standard White Series	CB-024SA
C1010 to 8010-W	W.L. combination/Standard White Series	CB-024SA
C1020 to 8020-W	F.R. combination/Standard White Series	CB-024SA
C1030 to 8030-W	F.M.R. combination/Standard White Series	CB-024SA
C1040 to 8040-W	W.M. combination/Standard White Series	CB-024SA
C1050 to 8050-W	R.M. combination/Standard White Series	CB-024SA
C1060 to 8060-W	F.M. combination/Standard White Series	CB-024SA
C25N-B	Governor for medium pressure gas	CB-03-1SA
C3070 to 8070-W	F.F.M. combination/Standard White Series	CB-024SA
CAC4	Clamp cylinder/double acting/single rod	CB-030SA
CAC4-G4	Clamp cylinder/double acting/ anti-spatter adherence	CB-030SA
CAC-N32/40	Lightweight clamp cylinder/ double acting/single rod	CB-030SA
CAT	Cartridge cylinder/single acting, push type	CB-029SA
CAU30	Clean air unit	CB-024SA
CAV2	Cylinder with valve/ double acting/lubrication	CB-029SA
CAV2-N	Cylinder with valve/ double acting/no-lubrication	CB-029SA
CCH	Coolant check valve	CB-03-1SA
CG	Fiber tube push-in fitting (clean-room)	CB-024SA
CHB	Air operated 2-port ball valve (compact rotary valve)/double acting	CB-03-1SA
CHBF	Air operated 2-port ball valve (compact rotary valve)/double acting/full bore	CB-03-1SA

■ Listed catalog No.

CB-029SA : Pneumatic Cylinders I
CB-030SA : Pneumatic Cylinders II
CB-023SA : Pneumatic Valves
CB-024SA : Pneumatic, Vacuum and Auxiliary Components
CB-03-1SA : General Purpose Valves

■ Codes (pneumatic valves and general purpose valves)

Ⓓ : Discrete valves
Ⓘ : Individual wiring manifolds
Ⓑ : Block manifolds
Ⓡ : Reduced wiring manifolds
Ⓧ : Mix manifolds
Ⓜ : Manifolds

Model No. [index in alphabetical order]

Model No.	Model	Catalog No./page
C		
CHBF-R*	Air operated 2-port ball valve (compact rotary valve)/single acting/full bore	CB-03-1SA
CHBF-V*	Air operated 2-port ball valve (compact rotary valve)/with solenoid valve/double acting/full bore	CB-03-1SA
CHBF-X*	Air operated 2-port ball valve (compact rotary valve)/with solenoid valve/single acting/full bore	CB-03-1SA
CHB-R*	Air operated 2-port ball valve (compact rotary valve)/single acting	CB-03-1SA
CHB-V*	Air operated 2-port ball valve (compact rotary valve)/with solenoid valve/double acting	CB-03-1SA
CHB-X*	Air operated 2-port ball valve (compact rotary valve)/with solenoid valve/single acting	CB-03-1SA
CHB-W	Air operated 2-port ball valve (compact rotary valve)/double acting/Outdoor Series	CB-03-1SA
CHB-WR*	Air operated 2-port ball valve (compact rotary valve)/single acting/Outdoor Series	CB-03-1SA
CHB-WV1	Air operated 2-port ball valve (compact rotary valve)/with solenoid valve/double acting/Outdoor Series	CB-03-1SA
CHB-WX1	Air operated 2-port ball valve (compact rotary valve)/with solenoid valve/single acting/Outdoor Series	CB-03-1SA
CHC	Auto hand changer	CB-030SA
CHG	Air operated 3-port ball valve (compact rotary valve)/double acting	CB-03-1SA
CHG-R*	Air operated 3-port ball valve (compact rotary valve)/single acting	CB-03-1SA
CHG-V*	Air operated 3-port ball valve (compact rotary valve)/with solenoid valve/double acting	CB-03-1SA
CHG-X*	Air operated 3-port ball valve (compact rotary valve)/with solenoid valve/single acting	CB-03-1SA
CHG-W	Air operated 3-port ball valve (compact rotary valve)/double acting/Outdoor Series	CB-03-1SA
CHG-WR*	Air operated 3-port ball valve (compact rotary valve)/single acting/Outdoor Series	CB-03-1SA
CHG-WV1	Air operated 3-port ball valve (compact rotary valve)/with solenoid valve/double acting/Outdoor Series	CB-03-1SA
CHG-WX1	Air operated 3-port ball valve (compact rotary valve)/with solenoid valve/single acting/Outdoor Series	CB-03-1SA
CHL	Check valve with push-in fitting	CB-024SA
CHV2	Check valve	CB-024SA
CK	3-way jaw long stroke chuck	CB-030SA
CKA	3-way jaw thin chuck	CB-030SA
CKF	Hollow chuck	CB-030SA
CKG	3-way jaw bearing chuck	CB-030SA
CKH2	Powerful chuck with high gripping power	CB-030SA
CKJ	Ultra long stroke chuck	CB-030SA
CKL2	Powerful chuck	CB-030SA
CKL2-*-HC	Position locking powerful chuck	CB-030SA
CKL2-FC	Mechanical chuck	CB-030SA
CKLB2	2-way powerful chuck	CB-030SA
CKS	Thin chuck	CB-030SA
CKV2	Compact cylinder with valve/double acting/single rod	CB-029SA
CKV2-M	Compact cylinder with valve/double acting/anti-rotation	CB-029SA
CMA2	Medium bore size cylinder/double acting/single rod	CB-029SA
CMA2-E	Medium bore size cylinder/double acting/direct mounting	CB-029SA
CMK2	Small bore size cylinder/double acting/single rod	CB-029SA
CMK2-*C	Small bore size cylinder/double acting/rubber-air cushioned	CB-029SA
CMK2-B	Small bore size cylinder/double acting/back to back	CB-029SA
CMK2-C	Small bore size cylinder/double acting/air cushioned	CB-029SA
CMK2-D	Small bore size cylinder/double acting/double rod	CB-029SA
CMK2-F	Small bore size cylinder/double acting/fine speed	CB-029SA
CMK2-G2/G3	Small bore size cylinder/Double acting/coolant proof	CB-029SA
CMK2-H	Small bore size cylinder/double acting/low hydraulic	CB-029SA
CMK2-M	Small bore size cylinder/double acting/rotation-stop	CB-029SA
CMK2-P	Small bore size cylinder/double acting/adjustable stroke/push	CB-029SA
CMK2-Q	Small bore size cylinder/double acting/position locking	CB-029SA
CMK2-R	Small bore size cylinder/double acting/adjustable stroke/pull	CB-029SA
CMK2-S	Small bore size cylinder/single acting/push	CB-029SA
CMK2-SR	Small bore size cylinder/single acting/pull	CB-029SA
CMK2-T	Small bore size cylinder/double acting/heat resistance	CB-029SA
CMK2-Z	Small bore size cylinder/double acting/built-in speed controller	CB-029SA
COV*2	Cylinder with valve/double acting/lubrication	CB-029SA
COV*2-N	Cylinder with valve/double acting/no-lubrication	CB-029SA
CPD	Electronic pressure switch for coolant (with digital display)	CB-024SA
CPE	Mechanical pressure switch for coolants (for low pressure)	CB-024SA

CSB	Air operated 2-port ball valve for steam (compact rotary valve)/standard bore	CB-03-1SA
CSBF	Air operated 2-port ball valve for steam (compact rotary valve)/full bore	CB-03-1SA
CSBF-R	Air operated 2-port ball valve for steam (compact rotary valve)/full bore	CB-03-1SA
CSB-R*	Air operated 2-port ball valve for steam (compact rotary valve)/standard bore	CB-03-1SA
CSB-W	Air operated 2-port ball valve for steam (compact rotary valve)/Standard bore/Outdoor Series	CB-03-1SA
CSB-WR*	Air operated 2-port ball valve for steam (compact rotary valve)/Standard bore/Outdoor Series	CB-03-1SA
CV3E	Air operated 3-port valve for low pressure (coolant valve)	CB-03-1SA
CVE2-05/10	Air operated 2-port valve for low pressure (coolant valve)	CB-03-1SA
CVE2-16/30	Air operated 2-port valve for medium pressure (coolant valve)	CB-03-1SA
CVE22-05/10	Air operated 2-port valve for low pressure (coolant valve)	CB-03-1SA
CVE22-16/30	Air operated 2-port valve for medium pressure (coolant valve)	CB-03-1SA
CVE22-70	Air operated 2-port valve for high pressure (coolant valve)	CB-03-1SA
CVE2-70	Air operated 2-port valve for high pressure (coolant valve)	CB-03-1SA
CVE3-35/70	Air operated 3-port valve for medium and high pressure (coolant valve)	CB-03-1SA
CVS3E	Air operated 3-port valve for low pressure (coolant valve)/with solenoid valve	CB-03-1SA
CVSE2-05/10	Air operated 2-port valve for low pressure (coolant valve)/with solenoid valve	CB-03-1SA
CVSE2-15AX039	Air operated 2-port valve with solenoid valve (coolant control)/high pressure coolant valve	CB-03-1SA
CVSE2-16/30	Air operated 2-port valve for medium pressure (coolant valve) /with solenoid valve	CB-03-1SA
CVSE2-20AX040	Air operated 2-port valve with solenoid valve (coolant control)/high pressure coolant valve	CB-03-1SA
CVSE2-25AX041	Air operated 2-port valve with solenoid valve (coolant control)/high pressure coolant valve	CB-03-1SA
CVSE22-05/10	Air operated 2-port valve for low pressure (coolant valve)/with solenoid valve	CB-03-1SA
CVSE22-16/30	Air operated 2-port valve for medium pressure (coolant valve) /with solenoid valve	CB-03-1SA
CVSE22-70	Air operated 2-port valve for high pressure (coolant valve)/with solenoid valve	CB-03-1SA
CVSE2-70	Air operated 2-port valve for high pressure (coolant valve)/with solenoid valve	CB-03-1SA
CVSE3-35/70	Air operated 3-port valve for medium/high pressure (coolant valve)/with solenoid valve	CB-03-1SA
CXU	Air unit	CB-024SA

D

D101 to 801-W	Distributor/for modular F.R.L./ Standard White Series	CB-024SA
DB1000	Automatic drain	CB-024SA
DB3000	Automatic drain	CB-024SA
DBS1006	Drain sensor	CB-024SA
DPS	Switch	CB-024SA
DSC	Speed controller with adjusting dial	CB-024SA
DSG	Solenoid valve for gas combustion system	CB-03-1SA
DSG-W	Solenoid valve for gas combustion system	CB-03-1SA
DT3000, 3010-W	Automatic drain	CB-024SA
DT4000, 4010-W	Automatic drain	CB-024SA
DVL	Needle valve with adjusting dial	CB-024SA

E

E0, ET0	Cylinder switch/heat resistance/2-wire reed	CB-029SA
ECS	Electric actuator	CB-029SA
ECV	Electric actuator	CB-029SA
EH	Fiber tube clean-room type (For push-in fitting)	CB-024SA
EMB21	Metal-free 2-port solenoid valve	CB-03-1SA
EMB41	Metal-free 2-port solenoid valve	CB-03-1SA
EMB51	Metal-free 2-port solenoid valve	CB-03-1SA
ETS	Electric actuator	CB-029SA
ETV	Electric actuator	CB-029SA

■ Listed catalog No.

CB-029SA : Pneumatic Cylinders I
CB-030SA : Pneumatic Cylinders II
CB-023SA : Pneumatic Valves
CB-024SA : Pneumatic, Vacuum and Auxiliary Components
CB-03-1SA : General Purpose Valves

■ Codes (pneumatic valves and general purpose valves)

Ⓓ: Discrete valves
Ⓡ: Reduced wiring manifolds
Ⓘ: Individual wiring manifolds
Ⓧ: Mix manifolds
Ⓑ: Block manifolds
Ⓜ: Manifolds

Model No. [index in alphabetical order]

Model No.	Model	Catalog No./page
F		
EV2100V, 2109V	Electro pneumatic regulator/solenoid valve vacuum compatible	CB-024SA
EVR	Electro pneumatic regulator/solenoid valve medium flow rate	CB-024SA
EVB*17	Electric vacuum valve	CB-03-1SA
EVD	Digital electro pneumatic regulator	CB-024SA
EVL	Low pressure electro pneumatic regulator	CB-024SA
EVS2	Compact electro pneumatic regulator/solenoid valve	CB-024SA
EXA	Pilot operated 2-port solenoid valve for compressed air	CB-03-1SA
F		
F*	Soft nylon tube	CB-024SA
F0V/H	Cylinder switch/1-color display/reed 2-wire	CB-029SA
F1000 to 8000-P6	Air filter/copper and PTFE free series	CB-024SA
F1000 to 8000-W	Air filter/Standard White Series	CB-024SA
F2S, F3S	Cylinder switch/1-color display/2, 3-wire proximity sensor	CB-029SA
F2, 3V/H	Cylinder switch/1-color display/2, 3-wire proximity sensor	CB-029SA
F3PH/V	Cylinder switch/PNP output 3-wire proximity sensor	CB-029SA
F2, 3Y V/H	Cylinder switch/2-color display/2, 3-wire proximity sensor	CB-029SA
F3000 to 8000-G4	Air filter/flame-resistant series	CB-024SA
FA*	Miniature fitting/adjustable socket	CB-024SA
FA331 to 831	Exhaust cleaner	CB-024SA
FAB	Direct acting 2-port solenoid valve for compressed air, single unit (Special purpose)	CB-03-1SA
FAC	Clean exhaust filter	CB-024SA
FAG	Direct acting 3-port solenoid valve for compressed air/single unit (Special purpose)	CB-03-1SA
FBS	Miniature fitting/bush	CB-024SA
FBU2	Fine buffer	CB-024SA
FC*	Miniature fitting/clamp fitting	CB-024SA
FCD	Flat compact cylinder/double acting/single rod	CB-029SA
FCD-D	Flat compact cylinder/double acting/double rod	CB-029SA
FCD-K	Flat compact cylinder/double acting/cushioned	CB-029SA
FCH	Flat compact cylinder/single acting/pull	CB-029SA
FCK	Shock absorber/adjustable	CB-030SA
FCM	Compact flow rate controller	CB-024SA
FCS	Flat compact cylinder/single acting/push	CB-029SA
FCS1000	Inline clean filter	CB-024SA
FCS500	Inline clean filter	CB-024SA
FGB	Direct acting 2-port solenoid valve for dry air, single unit (Special purpose)	CB-03-1SA
FGB31	Noise reduction special purpose valve (2-port direct acting solenoid valve for compressed air/dry air)	CB-03-1SA
FGB41	Noise reduction special purpose valve (2-port direct acting solenoid valve for compressed air/dry air)	CB-03-1SA
FGG	Direct acting 3-port solenoid valve for dry air, single unit (Special purpose)	CB-03-1SA
FGS	Miniature fitting/gasket	CB-024SA
FH100	Feather hand (mini-parallel hand)	CB-030SA
FH500	Feather hand (mini-fulcrum hand)	CB-030SA
FHB	Direct acting 2-port solenoid valve for hot water/single unit (Special purpose)	CB-03-1SA
FJ	Floating fitting	CB-030SA
FK	Simplified floating fitting	CB-030SA
FLB	Direct acting 2-port solenoid valve for oil/single unit (Special purpose)	CB-03-1SA
FLS	Miniature fitting/extension	CB-024SA
FM*	Miniature fitting/manifold	CB-024SA
FM3000 to 8000	Air filter/medium pressure series	CB-024SA
FMD	Flow rate adjusting valve	CB-03-1SA
FMS	Metering valve with silencer	CB-024SA
FNS	Miniature fitting/double screw nipple	CB-024SA
FPL	Miniature fitting/plug	CB-024SA
FPV	Block valve	CB-024SA
FS*	Miniature fitting/socket	CB-024SA
FSL100	Inline filter	CB-024SA
FSL200	Inline filter	CB-024SA
FSL500	Inline filter	CB-024SA
FSM3	Compact flow rate sensor/integrated display/separated display	CB-024SA
FSM-V	Compact flow rate sensor/miniature analog output/switch output	CB-024SA
FSM-V	Miniature flow rate sensor	CB-024SA
FSM-V-D	Separated display	CB-024SA
FSM-VFM	Compact flow rate sensor/inline filter	CB-024SA
FSM-X	Miniature flow rate switch	CB-024SA
FT*	Miniature fitting/barbed fitting	CB-024SA
FVB	Direct acting 2-port solenoid valve for medium vacuum/single unit (Special purpose)	CB-03-1SA

FWB	Direct acting 2-port solenoid valve for water/single unit (Special purpose)	CB-03-1SA
FWB31	Noise reduction special purpose valve (direct acting 2-port solenoid valve for water)	CB-03-1SA
FWB41	Noise reduction special purpose valve (direct acting 2-port solenoid valve for water)	CB-03-1SA
FWD	Compact pilot operated solenoid valve for water	CB-03-1SA
FWG	Direct acting 3-port solenoid valve for water, single unit (Special purpose)	CB-03-1SA
FWS	Miniature fitting/bulkhead	CB-024SA
FW4000, 8000	Air filter Outdoor Series	CB-024SA
FX	Drain separator	CB-024SA

G

G29D	Miniature pressure gauge	CB-024SA
G39D	Round pressure gauge	CB-024SA
G401-W	Low-profile pressure gauge	CB-024SA
G40D	Pressure gauge with safety marker	CB-024SA
G45D	Pressure gauge with limit marker	CB-024SA
G49D, 59D	General-use pressure gauge	CB-024SA
G49D, 59D-P6	Pressure gauge/copper and PTFE free series	CB-024SA
G49D, G59D-P70, P9*	General purpose pressure gauge for clean room	CB-024SA
G52D	Pressure gauge with switch	CB-024SA
G53D	Pressure gauge for panel mounting	CB-024SA
GA400	Differential pressure gauge	CB-024SA
GAB312	Direct acting 2-port solenoid valve, manifold/actuator (General purpose)	CB-03-1SA
GAB312-Z	Direct acting 2-port solenoid valve for dry air, manifold/actuator (General purpose)	CB-03-1SA
GAB352	Direct acting 2-port solenoid valve, manifold/actuator (General purpose)	CB-03-1SA
GAB352-Z	Direct acting 2-port solenoid valve for dry air, manifold/actuator (General purpose)	CB-03-1SA
GAB412	Direct acting 2-port solenoid valve, manifold/actuator (General purpose)	CB-03-1SA
GAB412-Z	Direct acting 2-port solenoid valve for dry air, manifold/actuator (General purpose)	CB-03-1SA
GAB422	Direct acting 2-port solenoid valve, manifold/actuator (General purpose)	CB-03-1SA
GAB452	Direct acting 2-port solenoid valve, manifold/actuator (General purpose)	CB-03-1SA
GAB452-Z	Direct acting 2-port solenoid valve for dry air, manifold/actuator (General purpose)	CB-03-1SA
GAG31*	Direct acting 3-port solenoid valve, manifold/actuator (General purpose)	CB-03-1SA
GAG31*-Z	Direct acting 3-port solenoid valve for dry air, manifold/actuator (General purpose)	CB-03-1SA
GAG33*	Direct acting 3-port solenoid valve, manifold/actuator (General purpose)	CB-03-1SA
GAG33*-Z	Direct acting 3-port solenoid valve for dry air, manifold/actuator (General purpose)	CB-03-1SA
GAG34*	Direct acting 3-port solenoid valve, actuator (General purpose)	CB-03-1SA
GAG34*-Z	Direct acting 3-port solenoid valve for dry air, actuator (General purpose)	CB-03-1SA
GAG35*	Direct acting 3-port solenoid valve, manifold/actuator (General purpose)	CB-03-1SA
GAG35*-Z	Direct acting 3-port solenoid valve for dry air, manifold/actuator (General purpose)	CB-03-1SA
GAG41*	Direct acting 3-port solenoid valve, manifold/actuator (General purpose)	CB-03-1SA
GAG41*-Z	Direct acting 3-port solenoid valve for dry air, manifold/actuator (General purpose)	CB-03-1SA
GAG43*	Direct acting 3-port solenoid valve, manifold/actuator (General purpose)	CB-03-1SA
GAG43*-Z	Direct acting 3-port solenoid valve for dry air, manifold/actuator (General purpose)	CB-03-1SA
GAG44*	Direct acting 3-port solenoid valve, actuator (General purpose)	CB-03-1SA
GAG44*-Z	Direct acting 3-port solenoid valve for dry air, actuator (General purpose)	CB-03-1SA
GAG45*	Direct acting 3-port solenoid valve, manifold/actuator (General purpose)	CB-03-1SA
GAG45*-Z	Direct acting 3-port solenoid valve for dry air, manifold/actuator (General purpose)	CB-03-1SA
GAMD3R**	Air operated valve for chemical liquids (Manifold/branch valve)	CB-03-1SA
GASB	Ball valve for automatic emergency shutdown	CB-03-1SA

■ Listed catalog No.

CB-029SA : Pneumatic Cylinders I
CB-030SA : Pneumatic Cylinders II
CB-023SA : Pneumatic Valves
CB-024SA : Pneumatic, Vacuum and Auxiliary Components
CB-03-1SA : General Purpose Valves

■ Codes (pneumatic valves and general purpose valves)

Ⓓ: Discrete valves
Ⓘ: Individual wiring manifolds
Ⓑ: Block manifolds
Ⓡ: Reduced wiring manifolds
Ⓧ: Mix manifolds
Ⓜ: Manifolds

Model No. [index in alphabetical order]

Model No.	Model	Catalog No./page
G		
GAV	Low pressure gas combination valve	CB-03-1SA
GCVE2	Modular coolant valve/air operated	CB-03-1SA
GCVSE2	Modular coolant valve/with solenoid valve	CB-03-1SA
GEXA	Pilot operated 2-port solenoid valve for compressed air/push-in fitting manifold	CB-03-1SA
GFAB	Direct acting 2-port solenoid valve for compressed air, manifold (Special purpose)	CB-03-1SA
GFAG	Direct acting 3-port solenoid valve for compressed air, manifold (Special purpose)	CB-03-1SA
GFGB	Direct acting 2-port solenoid valve for dry air, manifold (Special purpose)	CB-03-1SA
GFGG	Direct acting 3-port solenoid valve for dry air, manifold (Special purpose)	CB-03-1SA
GFLB	Direct acting 2-port solenoid valve for oil, manifold (Special purpose)	CB-03-1SA
GFM	Glass float module	CB-024SA
GFVB	Direct acting 2-port solenoid valve for medium vacuum, manifold (Special purpose)	CB-03-1SA
GFWB	Direct acting 2-port solenoid valve for water, manifold (Special purpose)	CB-03-1SA
GFWG	Direct acting 3-port solenoid valve for water, manifold (Special purpose)	CB-03-1SA
GHV	Gas combination valve	CB-03-1SA
GLC	Guideless cylinder/double acting	CB-030SA
GMF1	ⓘPilot operated 5-port ISO valve/ DIN terminal box/ISO size (1)	1484
GMF1	ⓘPilot operated 5-port ISO valve/I/O connector/ISO size (1)	1512
GMF2	ⓘPilot operated 5-port ISO valve/ DIN terminal box/ISO size (2)	1488
GMF2	ⓘPilot operated 5-port ISO valve/I/O connector/ISO size (2)	1516
GMFZ	ⓧPilot operated 5-port ISO valve/ DIN terminal box/ISO size (1)/(2)	1492
GMFZ	ⓧPilot operated 5-port ISO valve/ I/O connector /ISO size (1)/(2)	1520
GNAB*	Air operated 2-port valve, manifold (Compact cylinder valve)	CB-03-1SA
GNAB*V	Air operated 2-port valve for low vacuum, manifold (Compact cylinder valve)	CB-03-1SA
GNAD*	Diaphragm cylinder valve, manifold	CB-03-1SA
GNAD*V	Diaphragm cylinder valve for low vacuum, manifold	CB-03-1SA
GPS2	Contact confirmation switch/single unit	CB-024SA
GPS3	Digital gap switch/single unit	CB-024SA
GRC	Table rotary actuator/basic	CB-030SA
GRC-F	Table rotary actuator/fine speed	CB-030SA
GRC-K	Table rotary actuator/high accuracy	CB-030SA
GRC-KF	Table rotary actuator/high accuracy, fine speed	CB-030SA
GSV	Solenoid valve for automatic watering control	CB-03-1SA
GSV2	Solenoid valve for automatic watering control	CB-03-1SA
GT9000	Refrigeration air dryer/air cooling, large standard inlet air (40°C)	CB-024SA
GT9000W	Refrigeration air dryer/water cooling, large standard inlet air (40°C)	CB-024SA
GT9000WV2	Refrigeration air dryer/inverter-controlled water cooling, large standard inlet air (40°C)	CB-024SA
GW49D	Outdoor-use pressure gauge	CB-024SA
GWC*	Fitting/cap	CB-024SA
GWCR*	Fitting/cross	CB-024SA
GWFY*	Fitting/FY	CB-024SA
GWJL*	Mini fitting/elbow	CB-024SA
GWJP*	Mini fitting/plug	CB-024SA
GWJS*	Mini fitting/straight	CB-024SA
GWJT*	Mini fitting/tee	CB-024SA
GWJY*	Mini fitting/Y tee	CB-024SA
GWL*	Fitting/elbow	CB-024SA
GWM*	Fitting/for tightening fitting	CB-024SA
GWMF*	Fitting/manifold	CB-024SA
GWP*-0	Fitting/connecting plug	CB-024SA
GWP*-B	Fitting/blanking plug	CB-024SA
GWP*-L	Fitting/L type plug	CB-024SA
GWS*	Fitting/straight	CB-024SA
GWT*	Fitting/tee	CB-024SA
GWTR*	Fitting/tetrapod	CB-024SA
GWWY*	Fitting/double Y	CB-024SA
GWY*	Fitting/Y tee	CB-024SA
GX3200D	Refrigeration air dryer/compact type for mounting on equipment, standard inlet air (35°C)	CB-024SA
GX5200D	Refrigeration air dryer/compact, for direct compressor connection, high temperature inlet air (55°C)	CB-024SA

H

H0	Cylinder switch/1-color display/reed	CB-029SA
H0Y	Cylinder switch/2-color display/reed	CB-029SA
HAP-1C	Parallel hand	CB-030SA
HAP-2 to 4CS	Parallel hand	CB-030SA
HB	High corrosion resistant direct acting 2-port solenoid valve	CB-03-1SA
HBL	Fulcrum hand	CB-030SA
HCA	High speed cylinder/double acting/single rod	CB-030SA
HCM	High energy absorption cylinder/double acting/single rod	CB-030SA
HCP	Lateral parallel hand	CB-030SA
HD-0.5 to 9	Desiccant air dryer/compact heat-less dryer	CB-024SA
HDL	Wide angle hand	CB-030SA
HFP	Wide parallel hand	CB-030SA
HGP	Long stroke parallel hand	CB-030SA
HJL	Toggle hand	CB-030SA
HK1	Motorized valve for gas combustion system	CB-03-1SA
HKP	Cross roller parallel hand	CB-030SA
HLA	Thin parallel hand	CB-030SA
HLAG	Rubber covered thin parallel hand	CB-030SA
HLB	Thin parallel hand	CB-030SA
HLBG	Rubber covered thin parallel hand	CB-030SA
HLC	Thin long stroke parallel hand	CB-030SA
HLD	Ultra thin parallel hand	CB-030SA
HMD	Thin wide angle hand	CB-030SA
HMF	Compact wide parallel hand	CB-030SA
HMFB	LM guided large wide parallel hand	CB-030SA
HMTB1	Compact metal-free lever 2-port solenoid valve for medical equipment	CB-03-1SA
HMTG1	Compact metal-free lever 3-port solenoid valve for medical equipment	CB-03-1SA
HMV	Ⓓ Manual selector valve/miniature	1840
HNB1	Compact direct acting 2-port solenoid valve	CB-03-1SA
HNG1	Compact direct acting 3-port solenoid valve	CB-03-1SA
HPS	Close contact confirmation switch/single unit	CB-024SA
HPV	Manual pinch valve	CB-03-1SA
HRL-1	Hybrid robot/pneumatic robot element/single axis unit	CB-030SA
HRL-2G	Hybrid robot/2-action pneumatic robot	CB-030SA
HRL-2S	Hybrid robot/2-action pneumatic robot	CB-030SA
HS	Motorized valve for gas combustion system	CB-03-1SA
HSV	Ⓓ Manual selector valve/standard	1840
HVB112	Solenoid valve for high vacuum	CB-03-1SA
HVB212	Solenoid valve for high vacuum	CB-03-1SA
HVB312	Solenoid valve for high vacuum	CB-03-1SA
HVB412	Solenoid valve for high vacuum	CB-03-1SA
HVB512	Solenoid valve for high vacuum	CB-03-1SA
HVB612	Solenoid valve for high vacuum	CB-03-1SA
HVB712	Solenoid valve for high vacuum	CB-03-1SA
HVL12	Delay vacuum solenoid valve	CB-03-1SA
HYN	Direct acting 2, 3-port valve (pinch valve for high purity fluids)	CB-03-1SA

I

IAGD5	Integrated gas supply system	CB-03-1SA

J

J100 to 800-W	Joiner/for rotary modular F.R.L./Standard White Series	CB-024SA
JL	Fitting (elbow fitting)	CB-024SA
JSB3	Brake unit	CB-030SA
JSC3 (-N) JSC4 (-N)	Brake cylinder (medium and large bore size)/double acting/single rod	CB-030SA
JSC3-H JSC4-H	Brake cylinder (medium and large bore size)/double acting/low hydraulic	CB-030SA
JSC3-P12	Brake cylinder (oil-prohibited)	CB-029SA
JSC3-T JSC4-T	Brake cylinder (medium and large bore size)/double acting/heat resistance	CB-030SA

■ Listed catalog No.

CB-029SA : Pneumatic Cylinders I
CB-030SA : Pneumatic Cylinders II
CB-023SA : Pneumatic Valves
CB-024SA : Pneumatic, Vacuum and Auxiliary Components
CB-03-1SA : General Purpose Valves

■ Codes (pneumatic valves and general purpose valves)

Ⓓ : Discrete valves
Ⓡ : Reduced wiring manifolds
Ⓘ : Individual wiring manifolds
Ⓧ : Mix manifolds
Ⓑ : Block manifolds
Ⓜ : Manifolds

Model No. [index in alphabetical order]

Model No.	Model	Catalog No./page
J		
JSC3-V	Brake cylinder medium bore size/ with valve for brake/double acting	CB-030SA
JSG	Tie rod cylinder with brake/ double acting/single rod	CB-030SA
JSG-V	Tie rod cylinder with brake/double acting/with valve for brake release	CB-030SA
JSK2	Brake cylinder (small bore size ø20 to 40/caulking)/double acting	CB-030SA
JSK2-V	Brake cylinder (small bore size ø20 to 40/caulking)/with valve/double acting	CB-030SA
JSM2	Brake cylinder (small bore size ø20 to 40/disassembly)/double acting	CB-030SA
JSM2-V	Brake cylinder (small bore size ø20 to 40/disassembly)/with valve/double acting	CB-030SA
K		
K-005	Filter/for air sensor	CB-024SA
K0V/H	Cylinder switch/1-color display/reed 2-wire	CB-029SA
K2, 3V/H	Cylinder switch/1-color display/2, 3-wire proximity sensor	CB-029SA
K2, 3Y V/H	Cylinder switch/2-color display/2, 3-wire proximity sensor	CB-029SA
K3P V/H	Cylinder switch/PNP output 3-wire proximity sensor	CB-029SA
K5V/H	Cylinder switch/no display/reed 2-wire	CB-029SA
K60570	F.R.L. kit	CB-024SA
KML50	Fine level switch	CB-03-1SA
KML60	Fine level switch	CB-03-1SA
KML703	Fine level switch	CB-03-1SA
KX	Coiling tube	CB-024SA
KZV3	Pilot operated 2-port solenoid valve	CB-03-1SA
L		
L1000 to 8000-P6	Lubricator/copper and PTFE free series	CB-024SA
L1000 to 8000-W	Lubricator/Standard White Series	CB-024SA
LAD*	Diaphragm cylinder valve	CB-03-1SA
LBC	Air bearing actuator	CB-030SA
LCG	Linear slide cylinder/double acting/single rod	CB-030SA
LCG-P7*	Linear slide cylinder/double acting/clean-room specifications	CB-030SA
LCG-Q	Linear slide cylinder /double acting/position locking	CB-030SA
LCM	Linear slide cylinder/double acting/single rod	CB-030SA
LCM-A	Linear slide cylinder/double acting/side mounting	CB-030SA
LCM-P	Linear slide cylinder/double acting/adjustable stroke/push	CB-030SA
LCM-P73	Linear slide cylinder/double acting/clean-room specifications	CB-030SA
LCM-R	Linear slide cylinder/double acting/adjustable stroke/push-pull	CB-030SA
LCR	Linear slide cylinder/double acting/single rod	CB-030SA
LCR-F	Linear slide cylinder/double acting/fine speed	CB-030SA
LCR-F-P7*	Linear slide cylinder/double acting/ fine speed/clean-room specifications	CB-030SA
LCR-P7*	Linear slide cylinder/double acting/ single rod/clean-room specifications	CB-030SA
LCR-Q	Linear slide cylinder /double acting/position locking	CB-030SA
LCW	Linear slide cylinder/double acting/single rod	CB-030SA
LCW-Q	Linear slide cylinder /double acting/position locking	CB-030SA
LCX	Linear slide cylinder/double acting/single rod	CB-030SA
LCX-*L	Linear slide cylinder/double acting/single rod/long stroke	CB-030SA
LCX-*L-P7*	Linear slide cylinder/double acting/single rod/clean-room specifications/long stroke	CB-030SA
LCX-P7*	Linear slide cylinder/double acting/ single rod/clean-room specifications	CB-030SA
LCX-Q	Linear slide cylinder/double acting/position locking	CB-030SA
LCX-Q-*L	Linear slide cylinder/double acting/position locking/long stroke	CB-030SA
LFC-KL	Lifter cylinder	CB-029SA
LGD**	Air operated valve for process gas	CB-03-1SA
LGD*0	Manual valve for process gas	CB-03-1SA
LHA	Linear guide hand	CB-030SA
LHAG	Linear guide hand with rubber cover	CB-030SA
LMB	Linear guide lock	CB-030SA
LML	Linear guide lock	CB-030SA

LN	Cylinder with length measuring sensor/sensor/amplifier/display	CB-030SA
LSH	Linear Slide Hand	CB-030SA
LW4000/LW8000	Lubricator Outdoor Series	CB-024SA

M

M0V/H	Cylinder switch/1-color display/reed 2-wire	CB-029SA
M1000 to 8000-P6	Oil mist filter/copper and PTFE free series	CB-024SA
M1000 to 8000-W	Oil mist filter/Standard White Series	CB-024SA
M2, 3V/H	Cylinder switch/1-color display/2, 3-wire proximity sensor	CB-029SA
M2, 3WV	Cylinder switch/2-color display/2, 3-wire proximity sensor	CB-029SA
M3GA1/2/3	Ⓘ Pilot operated 3-port valve/ body piping	96
M3GA1/2/3	Ⓜ Pilot operated 3-port valve (master valve)/body piping	324
M3GA1/2/3-T*(D)	Ⓡ Pilot operated 3-port valve Body piping	136
M3GB1/2	Ⓘ Pilot operated two 3-port valves integrated/base piping	112
M3GB1/2-T* (D)	Ⓡ Pilot operated two 3-port valves integrated/base piping	158
M3GD1/2/3	Ⓘ Pilot operated 3-port valve/ body piping	508
M3GD1/2/3-T*(D)	Ⓡ Pilot operated 3-port valve Body piping	534
M3GD1/2*0EJ	Ⓘ Intrinsically safe explosion-proof pilot operated 3-port valve/body piping	1740
M3GE1/2	Ⓘ Pilot operated two 3-port valves integrated/base piping	520
M3GE1/2-T* (D)	Ⓡ Pilot operated two 3-port valves integrated/base piping	554
M3GE1/2*0EJ	Ⓘ Intrinsically safe explosion-proof pilot operated 3-port valve/base piping	1748
M3KA1	Ⓘ Pilot operated 3-port valve Body piping	1298
M3KA1	Ⓜ Pilot operated 3-port valve (master valve)/body piping	1350
M3MA0	Ⓘ Direct acting 3-port valve/ body piping	1596
M3MB0	Ⓘ Direct acting 3-port valve/ sub-plate piping	1596
M3P V/H	Cylinder switch/1-color display/PNP output/3-wire proximity sensor	CB-029SA
M3PA1/2	Ⓘ Direct acting 3-port valve/ body piping	1620
M3PB1/2	Ⓘ Direct acting 3-port valve/ sub-plate piping	1620
M3QB1	Ⓘ Direct acting 3-port valve/ sub-plate piping	1522
M3QE1	Ⓘ Direct acting 3-port valve/ sub-plate piping	1546
M3QZ1	Ⓘ Direct acting 3-port valve/ sub-plate piping	1546
M3QRA	Ⓘ Direct acting 3-port valve/ body piping	1558
M3QRB	Ⓘ Direct acting 3-port valve/ sub-plate piping	1558
M4F0/1/2/3	Ⓘ Pilot operated 5-port valve/ body piping	1410
M4F0/1/2/3	Ⓜ Pilot operated 5-port valve (master valve)/body piping	1454
M4F30EX**	Ⓘ Explosion-proof pilot operated 5-port valve/body piping	1794
M4F3*0E	Ⓘ Explosion-proof pilot operated 5-port valve/body piping	1824
M4F4/5/6/7	Ⓘ Pilot operated 5-port valve/ sub-plate piping	1438
M4F4/5/6/7	Ⓜ Pilot operated 5-port valve (master valve)/sub-plate piping	1454
M4F4/5/6/7*0EX	Ⓘ Explosion-proof pilot operated 5-port valve/sub-plate piping	1794
M4F4/5/6/7*0E	Ⓘ Explosion-proof pilot operated 5-port valve/sub-plate piping	1824
M4GA1/2/3	Ⓘ Pilot operated 5-port valve/ body piping	96
M4GA1/2/3	Ⓜ Pilot operated 5-port valve (master valve)/body piping	324

■ Listed catalog No.

CB-029SA : Pneumatic Cylinders I
CB-030SA : Pneumatic Cylinders II
CB-023SA : Pneumatic Valves
CB-024SA : Pneumatic, Vacuum and Auxiliary Components
CB-03-1SA : General Purpose Valves

■ Codes (pneumatic valves and general purpose valves)

Ⓓ : Discrete valves
Ⓘ : Individual wiring manifolds
Ⓑ : Block manifolds
Ⓡ : Reduced wiring manifolds
Ⓧ : Mix manifolds
Ⓜ : Manifolds

Model No. [index in alphabetical order]

Model No.	Model	Catalog No./page
M		
M4GA1/2/3-T*(D)	Ⓡ Pilot operated 5-port valve/body piping	136
M4GA4	Ⓘ Pilot operated 5-port valve/body piping	728
M4GA4-T*	Ⓡ Pilot operated 5-port valve/body piping	760
M4GA4-T6 (D)	Ⓡ Pilot operated 5-port valve (serial transmission)/body piping	770
M4GB1/2/3	Ⓘ Pilot operated 5-port valve/base piping	112
M4GB1/2/3	Ⓜ Pilot operated 5-port valve (master valve)/base piping	334
M4GB1/2/3-T* (D)	Ⓡ Pilot operated 5-port valve base piping	158
M4GB4	Ⓘ Pilot operated 5-port valve/base piping	742
M4GB4-T*	Ⓡ Pilot operated 5-port valve base piping	776
M4GB4-T6 (D)	Ⓡ Pilot operated 5-port valve (serial transmission)/base piping	788
M4GD1/2/3	Ⓘ Pilot operated 5-port valve/body piping	508
M4GD1/2/3-T*(D)	Ⓡ Pilot operated 5-port valve/body piping	534
M4GD1/2/3/4*0EJ	Ⓘ Intrinsically safe explosion-proof pilot operated 5-port valve/body piping	1740
M4GE1/2/3	Ⓘ Pilot operated 5-port valve/base piping	520
M4GE1/2/3-T* (D)	Ⓡ Pilot operated 5-port valve base piping	554
M4GE1/2/3/4*0EJ	Ⓘ Intrinsically safe explosion-proof pilot operated 5-port valve/base piping	1748
M4KA1/2/3/4	Ⓘ Pilot operated 5-port valve/body piping	1298
M4KA1/2/3/4	Ⓜ Pilot operated 5-port valve (master valve)/body piping	1350
M4KB1/2/3/4	Ⓘ Pilot operated 4, 5-port valve/sub-plate piping	1310
M4KB1/2/3/4	Ⓜ Pilot operated 4, 5-port valve (master valve)/sub-plate piping	1356
M4SA0	Ⓘ Pilot operated 5-port valve/body piping	1244
M4SB0	Ⓘ Pilot operated 5-port valve/sub-plate piping	1244
M4SB0	Ⓡ Pilot operated 5-port valve/sub-plate piping	1248
M512*	Ⓓ Pilot operated 2-port valve/direct mounting	1638
M513*	Ⓓ Pilot operated 3-port valve/direct mounting	1638
M5V/H	Cylinder switch/no display/reed 2-wire	CB-029SA
MAB1	Metal-free 2-port solenoid valve	CB-03-1SA
MAG1	Metal-free 3-port solenoid valve	CB-03-1SA
MAVL	Large mechanical valve/detector	CB-024SA
MCP	Mechanical power cylinder	CB-030SA
MD	Multi-monitors	CB-024SA
MDC2	Compact direct mounting cylinder/double acting/single rod	CB-029SA
MDC2-F	Compact direct mounting cylinder/double acting/fine speed	CB-029SA
MDC2-X	Compact direct mounting cylinder/single acting/push	CB-029SA
MDC2-Y	Compact direct mounting cylinder/single acting/pull	CB-029SA
MDV	Compact direct mounting cylinder	CB-029SA
MEB2	Metal-free 2-port solenoid valve	CB-03-1SA
MEG2	Metal-free 3-port solenoid valve	CB-03-1SA
MEVT	Thin electro pneumatic regulator/reduced wiring manifold	CB-024SA
MFC	Robot cylinder/double acting/single rod	CB-030SA
MFC-B	Robot cylinder/double acting/with brake	CB-030SA
MFC-BK	Robot cylinder/double acting/with brake/high load	CB-030SA
MFC-BS	Robot cylinder/double acting/with brake sensor	CB-030SA
MFC-BSK	Robot cylinder/double acting/with brake sensor/high load	CB-030SA
MFC-K	Robot cylinder/double acting/high load	CB-030SA
MGD10/20R	Manual valve for process gas	CB-03-1SA
MGPS2	Contact confirmation switch/manifold	CB-024SA
MGPS3	Digital gap switch/manifold	CB-024SA
MHB4	Miniature motorized 2-port ball valve (motor valve)	CB-03-1SA
MHG4	Miniature motorized 3-port ball valve (motor valve)	CB-03-1SA
MHPS	Close contact confirmation switch manifold	CB-024SA
MJB3	Metal-free direct acting 2-port solenoid valve	CB-03-1SA
MJL*	Tightening fitting/elbow	CB-024SA

MJN*	Tightening fitting/sleeve	CB-024SA
MJS*	Tightening fitting/straight	CB-024SA
MJT*	Tightening fitting/tee	CB-024SA
MJU*	Tightening fitting/insert ring	CB-024SA
MKB3	Metal-free 2-port solenoid valve	CB-03-1SA
MM	Medium mechanical valve/detector	CB-024SA
MM3000 to 8000	Oil mist filter/medium pressure series	CB-024SA
MMD*03RN	Manual valve for chemical liquids	CB-03-1SA
MN3E0	Ⓡ Pilot operated 3, 4-port valve	896
MN3E00	Ⓡ Pilot operated 3, 4-port valve	872
MN3EX0	Ⓡ/Ⓧ Pilot operated 3-port valve	920
MN3GA1/2	Ⓘ/Ⓑ Pilot operated 3-port valve/body piping	230
MN3GA1/2-T*	Ⓘ/Ⓑ Pilot operated 3-port valve/body piping	246
MN3GAX12	Ⓡ/Ⓧ Pilot operated 3-port valve/body piping	284
MN3GB1/2	Ⓘ/Ⓑ Pilot operated two 3-port valves integrated/base piping	238
MN3GB1/2-T*	Ⓡ/Ⓑ Pilot operated two 3-port valves integrated/base piping	262
MN3GD1/2	Ⓘ/Ⓑ Pilot operated 3-port valve/body piping	614
MN3GD1/2-T*	Ⓘ/Ⓑ Pilot operated 3-port valve/body piping	630
MN3GDX12	Ⓡ/Ⓧ Pilot operated 3-port valve/body piping	666
MN3GE1/2	Ⓘ/Ⓑ Pilot operated two 3-port valves integrated/base piping	622
MN3GE1/2-T*	Ⓡ/Ⓑ Pilot operated two 3-port valves integrated/base piping	646
MN3S0	Ⓡ Pilot operated 3-port valve/(reduced wiring valve)	1196
MN3S0	Ⓡ Pilot operated 3-port valve/(reduced wiring valve)/two 3-port valves integrated	1196
MN4E0	Ⓡ Pilot operated 3, 4-port valve	896
MN4E00	Ⓡ Pilot operated 3, 4-port valve	872
MN4EX0	Ⓡ/Ⓧ Pilot operated 4-port valve	920
MN4GA1/2	Ⓘ/Ⓑ Pilot operated 5-port valve/body piping	230
MN4GA1/2-T*	Ⓡ/Ⓑ Pilot operated 5-port valve/body piping	246
MN4GAX12	Ⓡ/Ⓧ Pilot operated 5-port valve/body piping	284
MN4GB1/2	Ⓘ/Ⓑ Pilot operated 5-port valve/base piping	238
MN4GB1/2-T*	Ⓡ/Ⓑ Pilot operated 5-port valve/base piping	262
MN4GBX12	Ⓡ/Ⓧ Pilot operated 5-port valve/base piping	284
MN4GD1/2	Ⓘ/Ⓑ Pilot operated 5-port valve/body piping	614
MN4GD1/2-T*	Ⓡ/Ⓑ Pilot operated 5-port valve/body piping	630
MN4GDX12	Ⓡ/Ⓧ Pilot operated 5-port valve/body piping	666
MN4GE1/2	Ⓘ/Ⓑ Pilot operated 5-port valve/base piping	622
MN4GE1/2-T*	Ⓡ/Ⓑ Pilot operated 5-port valve/base piping	646
MN4GEX12	Ⓡ/Ⓧ Pilot operated 5-port valve/base piping	666
MN4KB1/2	Ⓑ Pilot operated 5-port valve/sub-plate piping	1330
MN4S0	Ⓡ Pilot operated 4-port valve/(reduced wiring valve)	1196
MNRB500	Block manifold regulator	CB-024SA
MNRJB500	Block manifold Compact direct acting precision regulator	CB-024SA
MR10R	Compact metal-free 2, 3-port solenoid valve	CB-03-1SA
MR16	Compact metal-free 2, 3-port solenoid valve	CB-03-1SA
MRG2	Magnet rodless cylinder/double acting	CB-029SA
MRL2	Magnet rodless cylinder/combination guided	CB-029SA
MRL2-F	Magnet rodless cylinder/combination guided/fine speed	CB-029SA

■ Listed catalog No.

CB-029SA : Pneumatic Cylinders I
CB-030SA : Pneumatic Cylinders II
CB-023SA : Pneumatic Valves
CB-024SA : Pneumatic, Vacuum and Auxiliary Components
CB-03-1SA : General Purpose Valves

■ Codes (pneumatic valves and general purpose valves)

Ⓓ : Discrete valves
Ⓘ : Individual wiring manifolds
Ⓑ : Block manifolds
Ⓡ : Reduced wiring manifolds
Ⓧ : Mix manifolds
Ⓜ : Manifolds

Model No. [index in alphabetical order]

Model No.	Model	Catalog No./page
M		
MRL2-G	Magnet rodless cylinder/ simplified guide 1-piston	CB-029SA
MRL2-GF	Magnet rodless cylinder/simplified guide 1-piston/fine speed	CB-029SA
MRL2-W	Magnet rodless cylinder/ simplified guide 2-piston	CB-029SA
MRL2-WF	Magnet rodless cylinder/simplified guide 2-piston/fine speed	CB-029SA
MS	Compact mechanical valve/detector	CB-024SA
MSB1	Motor driven 2-port ball valve for steam (motor valve)	CB-03-1SA
MSB1D	Motor driven 2-port ball valve with relay for steam (motor valve)	CB-03-1SA
MSB1DF	Motor driven 2-port ball valve with relay for steam (motor valve)/full bore	CB-03-1SA
MSB1F	Motor driven 2-port ball valve for steam (motor valve)/full bore	CB-03-1SA
MSD	Small compact cylinder/ double acting/single rod	CB-029SA
MSD-F	Small compact cylinder/double acting/single rod/fine speed	CB-029SA
MSDG-L	Small compact cylinder/double acting/guided/with switch	CB-029SA
MSDG-LF	Small compact cylinder/double acting/guided/with switch/fine speed	CB-029SA
MSD-K	Small compact cylinder/ double acting/high load	CB-029SA
MSD-KF	Small compact cylinder/double acting/high load/fine speed	CB-029SA
MSD-X	Small compact cylinder/single acting/push	CB-029SA
MSD-Y	Small compact cylinder/single acting/pull	CB-029SA
MT3S0	Ⓡ Pilot operated 3-port valve/ (reduced wiring valve)	1196
MT3S0	Ⓡ Pilot operated 3-port valve (Reduced wiring valve) Two 3-port valves integrated	1196
MT4S0	Ⓡ Pilot operated 4-port valve/ (reduced wiring valve)	1196
MTLPS	Cutting tool breakage detection switch/manifold	CB-024SA
MV3QRA	3QR negative pressure switching unit Body piping	1576
MV3QRB	3QR negative pressure switching unit Sub-plate piping	1576
MVB*0	Manual valve for high vacuum	CB-03-1SA
MVB*17	Manual valve for high vacuum	CB-03-1SA
MVC	Small cylinder with suction pad/double acting/single rod	CB-029SA
MVP*0	Manual valve for high vacuum	CB-03-1SA
MW3GA2	Ⓡ Pilot operated 3-port valve/ body piping	988
MW3GA2-R1	Ⓘ Pilot operated 3-port valve/ body piping	976
MW4GA2	Ⓡ Pilot operated 5-port valve/ body piping	988
MW4GA2-R1	Ⓘ Pilot operated 5-port valve/ body piping	976
MW4GB2	Ⓡ Pilot operated 5-port valve/ base side piping	1010
MW4GB2-R1	Ⓘ Pilot operated 5-port valve/ base side piping	980
MW4GB4-R1	Ⓘ Pilot operated 5-port valve/ base side piping	1124
MW4GB4-T1/6	Ⓡ Pilot operated 5-port valve/ base side piping	1128
MW4GZ2	Ⓡ Pilot operated 5-port valve/ base bottom piping	1010
MW4GZ2-R1	Ⓘ Pilot operated 5-port valve/ base bottom piping	980
MW4GZ4-R1	Ⓘ Pilot operated 5-port valve/ base bottom piping	1124
MW4GZ4-T1/6	Ⓡ Pilot operated 5-port valve/ base bottom piping	1128
MW4000, 8000	Oil mist filter Outdoor Series	CB-024SA
MWD	Weir diaphragm valve	CB-03-1SA
MX1000 to 8000-W	High performance oil mist filter Standard White Series	CB-024SA
MXB1	Motor driven 2-port ball valve (motor valve)	CB-03-1SA
MXB1D	Motor driven 2-port ball valve with relay (motor valve)	CB-03-1SA
MXB1DF	Motor driven 2-port ball valve with relay (motor valve)/full bore	CB-03-1SA
MXB1D-N	Motor driven oil-prohibited 2-port ball valve (motor valve)	CB-03-1SA
MXB1F	Motor driven 2-port ball valve (motor valve)/full bore	CB-03-1SA

MXB1-N	Motor driven oil-prohibited 2-port ball valve (motor valve)	CB-03-1SA
MXBC2	Motor driven proportional control 2-port ball valve (motor valve)	CB-03-1SA
MXG1	Motor driven 3-port ball valve (motor valve)	CB-03-1SA
MXG1D	Motor driven 3-port ball valve with relay (motor valve)	CB-03-1SA
MXG1D-N	Motor driven oil-prohibited 3-port ball valve (motor valve)	CB-03-1SA
MXG1-N	Motor driven oil-prohibited 3-port ball valve (motor valve)	CB-03-1SA
MXGC2	Motor driven proportional control 3-port ball valve (motor valve)	CB-03-1SA
MYB1	Metal-free 2-port solenoid valve	CB-03-1SA
MYB2	Metal-free 2-port solenoid valve	CB-03-1SA
MYB3	Metal-free 2-port solenoid valve	CB-03-1SA
MYG1	Metal-free 3-port solenoid valve	CB-03-1SA
MYG2	Metal-free 3-port solenoid valve	CB-03-1SA
MYG3	Metal-free 3-port solenoid valve	CB-03-1SA

N

N*P51*	Ⓑ Pilot operated 2, 3, 5-port valve/block manifold	1660
NAB*	Air operated 2-port valve/single unit (compact cylinder valve)	CB-03-1SA
NAB*V	Air operated 2-port valve with solenoid valve for low vacuum/single unit (compact cylinder valve)	CB-03-1SA
NAB-4SX1450	Air operated 2-port valve, cylinder valve for high pressure air	CB-03-1SA
NAB-4SX1451	Air operated 2-port valve, cylinder valve for high pressure air	CB-03-1SA
NAB-6X2191/2192	Medium pressure cylinder valve	CB-03-1SA
NAB-X2267/2268	Color changing valve	CB-03-1SA
NAD*	Diaphragm cylinder valve	CB-03-1SA
NAD*V	Diaphragm cylinder valve for low vacuum	CB-03-1SA
NAP11	Air operated 3-port valve	CB-03-1SA
NCK	Shock absorber/fixed	CB-030SA
NHS-H	New handling system/Z-axis module HRL	CB-030SA
NHS-S	New handling system/Z-axis module STL-B	CB-030SA
NP13/14	Internal pilot 3-port valve with solenoid valve	CB-03-1SA
NPV2	Direct pressure automatic pinch valve	CB-03-1SA
NS	Nitrogen gas extraction unit/unit type	CB-024SA
NSU	Nitrogen gas extraction unit/system	CB-024SA
NSR	New handling system/X-axis module	CB-030SA
NU	New urethane tube	CB-024SA
NVP11	Air operated 3-port valve/with solenoid valve	CB-03-1SA

O

OGD10/20R	Manual valve for process gas	CB-03-1SA
OMC2	Sequential fluid control components for pulse-jet valve (large port size dust collector valve)	CB-03-1SA

P

P1100-W	Reed switch Compact mechanical pressure switch	CB-024SA
P4000-W	Mechanical pressure switch/Standard White Series	CB-024SA
P4100-W	Reed switch Compact mechanical pressure switch	CB-024SA
P512*	Ⓓ Pilot operated 2-port valve/pilot	1638
P513*	Ⓓ Pilot operated 3-port valve/pilot	1638
P5142	Ⓓ Pilot operated 5-port valve/pilot	1638
P8100-W	Reed switch Compact mechanical pressure switch	CB-024SA
PCC	Pin clamp cylinder Double acting/single rod	CB-030SA
PCC-Q	Pin clamp cylinder Double acting/position locking	CB-030SA
PD2	Pilot operated 2-port air operated valve for dust collector	CB-03-1SA
PD3-20 to 40A	Pilot operated 2-port air operated valve for dust collector	CB-03-1SA
PD3-65 to 80A/M	Pilot operated 2-port valve, air operated for large bore size dust collector	CB-03-1SA

■ Listed catalog No.

CB-029SA : Pneumatic Cylinders I
CB-030SA : Pneumatic Cylinders II
CB-023SA : Pneumatic Valves
CB-024SA : Pneumatic, Vacuum and Auxiliary Components
CB-03-1SA : General Purpose Valves

■ Codes (pneumatic valves and general purpose valves)

Ⓓ : Discrete valves
Ⓡ : Reduced wiring manifolds
Ⓘ : Individual wiring manifolds
Ⓧ : Mix manifolds
Ⓑ : Block manifolds
Ⓜ : Manifolds

Model No. [index in alphabetical order]

Model No.	Model	Catalog No./page
P		
PDV2	Pilot operated 2-port valve with solenoid valve for dust collector	CB-03-1SA
PDV3-20 to 40A	Pilot operated 2-port valve with solenoid valve for dust collector	CB-03-1SA
PDV3-65 to 80A/M	Pilot operated 2-port valve with solenoid valve for large bore size dust collector	CB-03-1SA
PDVE4	Explosion-proof 2-port solenoid valve (explosion-proof pulse-jet valve) for dust collector	CB-03-1SA
PE	Pressure switch/logic valve	CB-024SA
PFD	Pneumatic flow rate sensor/separated display	CB-024SA
PFK	Pneumatic flow rate sensor/tester kit	CB-024SA
PG	Push-in fitting for fiber tube (Standard)	CB-024SA
PGM	Regulator for process gas	CB-03-1SA
PG-P2-B	Blanking plug	CB-024SA
PJVB	Control box manifold solenoid valve (2-port solenoid valve for pulse jet control)	CB-03-1SA
PKA	Pilot kick 2-port solenoid valve for air	CB-03-1SA
PKS	Pilot kick 2-port solenoid valve for steam	CB-03-1SA
PKW	Pilot kick 2-port solenoid valve for water	CB-03-1SA
PL	PL switch	CB-024SA
PLE-B12	Side block/integrated	CB-024SA
PLJ-C12	YES element/relay	CB-024SA
PLK-A11	OR element/line type	CB-024SA
PLK-B12	OR element/integrated	CB-024SA
PLK-C12	OR element/relay	CB-024SA
PLL-A11	AND element/line type	CB-024SA
PLL-B12	AND element/integrated	CB-024SA
PLL-C12	AND element/relay	CB-024SA
PLM	Memory element/relay	CB-024SA
PLN-B12	NOT element/integrated	CB-024SA
PLN-C12	NOT element/relay	CB-024SA
PLN-D12	Threshold element/relay	CB-024SA
PMP	Fine regulator	CB-03-1SA
PNA	Oxygen concentration monitor	CB-024SA
PPD3	Electronic pressure switch/sensor-amplifier integrated with display	CB-024SA
PPD3-S	Electronic pressure switch/stainless steel diaphragm sensor/sensor/amplifier integrated with display	CB-024SA
PPE	Compact electronic pressure switch/sensor-amplifier integrated/no display	CB-024SA
PPE-*A	Compact electronic pressure switch/sensor-amplifier integrated/no display/analog output	CB-024SA
PPG-D	Electronic pressure sensor with digital display	CB-024SA
PPR	Electronic pressure sensor with digital display	CB-024SA
PPX	Digital pressure sensor	CB-024SA
PRD	Amplifier/element and sensor	CB-024SA
PRE-A12	Pressure switch/relay	CB-024SA
PRF-A2	Booster/element and sensor	CB-024SA
PRS-A12	Solenoid valve/relay	CB-024SA
PRT	Timer/relay	CB-024SA
PSD	PLC branch block	CB-024SA
PSE	PLC I/O block	CB-024SA
PSL	PLC AND element	CB-024SA
PSM	PLC element	CB-024SA
PSV	PLC sub-base V type	CB-024SA
PSW	Electronic pressure switch/sensor-amplifier integrated/no display	CB-024SA
PTN2	Fitting for fiber tube	CB-024SA
PV5-6R	Ⓓ Pilot operated 5-port ISO valve/I/O connector/ISO size (1)	1500
PV5-8R	Ⓓ Pilot operated 5-port ISO valve/I/O connector/ISO size (2)	1506
PV5G-6	Ⓓ Pilot operated 5-port ISO valve/DIN terminal box/ISO size (1)	1472
PV5G-8	Ⓓ Pilot operated 5-port ISO valve/DIN terminal box/ISO size (2)	1478
PV5S-0	ISO compliant master valve	1527
PVP	Precise suction plate	CB-024SA
PVS	Pilot operated 2-port solenoid valve	CB-03-1SA
PWS	Threshold sensor	CB-024SA
PXB-B3	Pushbutton switch and switch body/separated	CB-024SA
PXC-K	Limit switch	CB-024SA
PXC-M	Miniature limit switch	CB-024SA
PXC-M	Compact limit switch	CB-024SA
PXD	Proximity sensor/element and sensor	CB-024SA
PXF	Limit sensor/element and sensor	CB-024SA
PXV	Air lamp	CB-024SA
PYM	Fine regulator	CB-03-1SA

PZM	Mounting bracket/line type	CB-024SA
PZU	Sub-base and input block/ relay sub-base	CB-024SA

Q

QEL	Quick exhaust valve	CB-024SA
QEV2	Quick exhaust valve	CB-024SA

R

R0, 3, 4, 6	Cylinder switch/1-color display/reed 2-wire	CB-029SA
R1, 2	Cylinder switch/1-color display/2-wire proximity sensor	CB-029SA
R1000 to 8000-P6	Regulator/copper and PTFE free series	CB-024SA
R1000 to 8000-W	Regulator/Standard White Series	CB-024SA
R1100 to 8100-P6	Reverse regulator/copper and PTFE free series	CB-024SA
R1100 to R8100-W	Reverse regulator/Standard White Series	CB-024SA
R2, 3Y	Cylinder switch/2-color display/2, 3-wire proximity sensor	CB-029SA
R3000 to 8000-G4	Regulator/flame-resistant series	CB-024SA
R3100 to 8100-G4	Reverse regulator/flame-resistant series	CB-024SA
R5	Cylinder switch/no display/ reed 2-wire	CB-029SA
RA800	Compact regulator/compact piston	CB-024SA
RB500	Compact regulator	CB-024SA
RC2000	Clean regulator	CB-024SA
RCC2	Rotary clamp cylinder Double acting/single rod	CB-030SA
RCC2-G4	Rotary clamp cylinder Anti-spatter adherence	CB-030SA
RCS	Rotary clamp cylinder (Single guide) double acting/single rod	CB-030SA
RG	Fiber tube push-in fitting (flame resistance)	CB-024SA
RJB500	Compact direct acting precision regulator	CB-024SA
RJF	Rotary fitting	CB-024SA
RM3000, 4000	Regulator/medium pressure series	CB-024SA
RN3000 to 8000	Oil-prohibited regulator	CB-024SA
RP1000	Precision regulator	CB-024SA
RPE1000	Precision regulator	CB-024SA
RP2000	Precision regulator	CB-024SA
RRC	Rotary actuator/rack & pinion	CB-030SA
RS-6	Rain sensor for automatic watering control	CB-03-1SA
RSC-G	Watering controller	CB-03-1SA
RSC-1WP	Battery operated watering controller	CB-03-1SA
RSC-1WP-C	Automatic watering controller	CB-03-1SA
RSC-1WP-H	Automatic watering controller	CB-03-1SA
RSC-2WP	Battery operated watering controller	CB-03-1SA
RSC-S5	Solar controller	CB-03-1SA
RSV-K	Solenoid valve for automatic watering control	CB-03-1SA
RSV-W	Solenoid valve for automatic watering control	CB-03-1SA
RTD-3A	Air timer/logic valve	CB-024SA
RW4000, 8000	Regulator Outdoor Series	CB-024SA
RV3DA	Compact rotary actuator/variable angle/double vane mechanism	CB-030SA
RV3DV/W	Compact rotary actuator/with valve/double vane mechanism	CB-030SA
RV3DV/W	Large rotary actuator/with valve/double vane mechanism	CB-030SA
RV3S/D	Compact rotary actuator/vane	CB-030SA
RV3S/D	Large rotary actuator/vane	CB-030SA
RV3S/DH	Large rotary actuator/low hydraulic/vane mechanism	CB-030SA
RV3SA	Compact rotary actuator/variable angle/single vane mechanism	CB-030SA
RV3SV/W	Compact rotary actuator/with valve/single vane mechanism	CB-030SA
RV3SV/W	Large rotary actuator/with valve/single vane mechanism	CB-030SA
RVC	Shock absorber	CB-030SA

S

SAB*A	Air operated 2-port valve for air/gas (cylinder valve)	CB-03-1SA
SAB*S	Air operated 2-port valve for steam/water/air (cylinder valve)	CB-03-1SA

■ Listed catalog No.

CB-029SA : Pneumatic Cylinders I
CB-030SA : Pneumatic Cylinders II
CB-023SA : Pneumatic Valves
CB-024SA : Pneumatic, Vacuum and Auxiliary Components
CB-03-1SA : General Purpose Valves

■ Codes (pneumatic valves and general purpose valves)

Ⓓ: Discrete valves
Ⓘ: Individual wiring manifolds
Ⓑ: Block manifolds
Ⓡ: Reduced wiring manifolds
Ⓧ: Mix manifolds
Ⓜ: Manifolds

Model No. [index in alphabetical order]

Model No.	Model	Catalog No./page
S		
SAB*V	Air operated 2-port valve for low vacuum (cylinder valve)	CB-03-1SA
SAB*W	Air operated 2-port valve for water/liquid (cylinder valve)	CB-03-1SA
SAL	Compact air lamp/logic valve	CB-024SA
SC1	Speed controller/medium bore size	CB-024SA
SC1-W	Speed controller/Outdoor Series	CB-024SA
SC-20A to 50A	Speed controller/large bore size	CB-024SA
SC3P	Speed controller/stainless steel anti-corrosion	CB-024SA
SC3R	Speed controller/direct piping/elbow	CB-024SA
SC3U	Speed controller/universal/with push-in fitting	CB-024SA
SC3W	Speed controller/elbow/with push-in fitting	CB-024SA
SCA2	Medium bore size cylinder (medium bore size ø40 to 100)/double acting/single rod	CB-029SA
SCA2-B	Medium bore size cylinder (medium bore size ø40 to 100)/double acting/back to back	CB-029SA
SCA2-D	Medium bore size cylinder (medium bore size ø40 to 100)/double acting/double rod	CB-029SA
SCA2-G	Medium bore size cylinder (medium bore size ø40 to 100)/double acting/rubber scraper	CB-029SA
SCA2-G1	Medium bore size cylinder (medium bore size ø40 to 100)/double acting/with scraper	CB-029SA
SCA2-G2/3	Medium bore size cylinder (medium bore size ø40 to 100)/double acting/coolant proof	CB-029SA
SCA2-G4	Medium bore size cylinder (medium bore size ø40 to 100)/double acting/anti-spatter adherence	CB-029SA
SCA2-H	Medium bore size cylinder (medium bore size ø40 to 100)/double acting/low hydraulic	CB-029SA
SCA2-K	Medium bore size cylinder (medium bore size ø40 to 100)/double acting/steel tube	CB-029SA
SCA2-O	Medium bore size cylinder (medium bore size ø40 to 100)/double acting/low speed	CB-029SA
SCA2-P	Medium bore size cylinder (medium bore size ø40 to 100)/double acting/stroke adjustable/push	CB-029SA
SCA2-P12	Medium bore size cylinder (oil-prohibited)	CB-029SA
SCA2-Q2	Medium bore size cylinder (medium bore size ø40 to 100)/double acting/position locking	CB-029SA
SCA2-R	Medium bore size cylinder (medium bore size ø40 to 100)/double acting/adjustable stroke/pull	CB-029SA
SCA2-T	Medium bore size cylinder (medium bore size ø40 to 100)/double acting/heat resistance	CB-029SA
SCA2-U	Medium bore size cylinder (medium bore size ø40 to 100)/double acting/low friction	CB-029SA
SCA2-V	Medium bore size cylinder (medium bore size ø40 to 100)/with valve/double acting	CB-029SA
SCA2-W	Medium bore size cylinder (medium bore size ø40 to 100)/double acting/two-stage	CB-029SA
SCD	Speed controller/miniature in/out	CB-024SA
SCD2	Speed controller/in/out line/with push-in fitting	CB-024SA
SCG	Tie rod cylinder/double acting/single rod	CB-029SA
SCG-D	Tie rod cylinder/double acting/double rod	CB-029SA
SCG-G	Tie rod cylinder/double acting/rubber scraper	CB-029SA
SCG-G2/3	Tie rod cylinder/double acting/coolant proof	CB-029SA
SCG-G4	Tie rod cylinder/double acting/anti-spatter adherence	CB-029SA
SCG-M	Tie rod cylinder/double acting/anti-rotation	CB-029SA
SCG-O	Tie rod cylinder/double acting/low speed	CB-029SA
SCG-Q	Tie rod cylinder/double acting/position locking	CB-029SA
SCG-U	Tie rod cylinder/double acting/low friction	CB-029SA
SCK	Shock absorber/adjustable	CB-030SA
SCL2	Speed controller/inline/with push-in fitting	CB-024SA
SCL2-N	Needle valve/line/with push-in fitting	CB-024SA
SCM	Round shaped cylinder/double acting/single rod	CB-029SA
SC-M3/M5 (-F)	Speed controller/miniature	CB-024SA
SCM-B	Round shaped cylinder/double acting/back to back	CB-029SA
SCM-D	Round shaped cylinder/double acting/double rod	CB-029SA
SCM-F	Round shaped cylinder/double acting/fine speed	CB-029SA
SCM-LD	Round shaped cylinder/double acting/direct mounting foot	CB-029SA
SCM-M	Round shaped cylinder/double acting/rotation-stop	CB-029SA

SCM-O	Round shaped cylinder/ double acting/low speed	CB-029SA
SCM-P	Round shaped cylinder/double acting/adjustable stroke/push	CB-029SA
SCM-Q	Round shaped cylinder/ double acting/position locking	CB-029SA
SCM-R	Round shaped cylinder/double acting/adjustable stroke/pull	CB-029SA
SCM-T	Round shaped cylinder/ double acting/heat resistance	CB-029SA
SCM-U	Round shaped cylinder/ double acting/low friction	CB-029SA
SCM-W	Round shaped cylinder/ double acting/two-stage	CB-029SA
SCM-W4	Round shaped cylinder/ double acting/tandem	CB-029SA
SCM-X	Round shaped cylinder/single acting/push	CB-029SA
SCM-Y	Round shaped cylinder/single acting/pull	CB-029SA
SCPD3	Pencil shaped cylinder/double acting/single rod	CB-029SA
SCPD3-*C	Pencil shaped cylinder/double acting/rubber-air cushioned	CB-029SA
SCPD3-D	Pencil shaped cylinder/double acting/double rod	CB-029SA
SCPD3-DT	Pencil shaped cylinder/double acting/double rod/heat resistance	CB-029SA
SCPD3-F	Pencil shaped cylinder/double acting/fine speed	CB-029SA
SCPD3-K	Pencil shaped cylinder/double acting/high load	CB-029SA
SCPD3-M	Pencil shaped cylinder/double acting/anti-rotation	CB-029SA
SCPD3-O	Pencil shaped cylinder/double acting/low speed	CB-029SA
SCPD3-T	Pencil shaped cylinder/double acting/heat resistance	CB-029SA
SCPD3-V	Pencil shaped cylinder/with valve/double acting	CB-029SA
SCPD3-Z	Pencil shaped cylinder/double acting/with speed controller	CB-029SA
SCPH3	Pencil shaped cylinder/single acting/pull	CB-029SA
SCPS	Pencil shaped cylinder/single acting/push	CB-029SA
SCPS3	Pencil shaped cylinder/single acting/push	CB-029SA
SCPS3-M	Pencil shaped cylinder/single acting/push/anti-rotation	CB-029SA
SCPS3-V	Pencil shaped cylinder/with valve/single acting	CB-029SA
SCS2	Large bore size cylinder (large bore size ø125 to 250)/double acting/single rod/lubricating	CB-029SA
SCS2-(N)	Large bore size cylinder (large bore size ø125 to 250)/double acting/single rod/non-lubricating	CB-029SA
SCS2-(N)D	Large bore size cylinder (large bore size ø125 to 250)/double acting/double rod/non-lubricating	CB-029SA
SCS2-B	Large bore size cylinder (large bore size ø125 to 250)/double acting/back to back	CB-029SA
SCS2-D	Large bore size cylinder (large bore size ø125 to 250)/double acting/double rod	CB-029SA
SCS2-G	Large bore size cylinder (large bore size ø125 to 250)/double acting/rubber scraper	CB-029SA
SCS2-H	Large bore size cylinder (large bore size ø125 to 250)/double acting/low hydraulic	CB-029SA
SCS2-P	Large bore size cylinder (large bore size ø125 to 250)/double acting/adjustable stroke	CB-029SA
SCS2-T	Large bore size cylinder (large bore size ø125 to 250)/double acting/heat resistance	CB-029SA
SCS2-W	Large bore size cylinder (large bore size ø125 to 250)/double acting/two-stage	CB-029SA
SD301, 302D	High polymer membrane dryer/single unit	CB-024SA
SD301, 302E	High polymer membrane dryer/single unit	CB-024SA
SD3015 to 3075	High polymer membrane dryer/single unit	CB-024SA
SD401, 402D	High polymer membrane dryer/single unit	CB-024SA
SD401, 402E	High polymer membrane dryer/single unit	CB-024SA
SD4050 to 4100	High polymer membrane dryer/single unit	CB-024SA
SDM4050 to 4100	High polymer membrane dryer/super dryer module unit series (large)	CB-024SA
SFC*	Anti-bacterial/bacteria-removing filter	CB-024SA
SFS10	Bacteria removing filter/inline	CB-024SA
SFR/SFRT	Fine speed fan rotary actuator	CB-029SA

■ Listed catalog No.

CB-029SA : Pneumatic Cylinders I
CB-030SA : Pneumatic Cylinders II
CB-023SA : Pneumatic Valves
CB-024SA : Pneumatic, Vacuum and Auxiliary Components
CB-03-1SA : General Purpose Valves

■ Codes (pneumatic valves and general purpose valves)

Ⓓ: Discrete valves
Ⓡ: Reduced wiring manifolds
Ⓘ: Individual wiring manifolds
Ⓧ: Mix manifolds
Ⓑ: Block manifolds
Ⓜ: Manifolds

Model No. [index in alphabetical order]

Model No.	Model	Catalog No./page
S		
SHC	High power cylinder/double acting/double force	CB-030SA
SHC-K	High power cylinder/double acting/quad force	CB-030SA
SHD	Desiccant air dryer/medium/ large heat-less dryer	CB-024SA
SHV2	Shuttle valve	CB-024SA
SKAC	Contact protecting circuit box (for AC circuit)	CB-029SA
SKDC	Contact protecting circuit box (for DC circuit)	CB-029SA
SKH	Shock absorbing valve	1858
SKL	Shock absorber	CB-030SA
SL	Silencer/metal body	CB-024SA
SLM	Silencer/miniature	CB-024SA
SL-M5	Silencer/small bore size	CB-024SA
SL-W	Silencer/Outdoor Series	CB-024SA
SLW	Silencer/small bore size/resin body	CB-024SA
SLW-*A-H	Silencer/high noise reduction/ small bore size/resin body	CB-024SA
SLW-*L	Silencer/large flow rate/small bore size/resin body	CB-024SA
SLW-20S	Silencer/high noise reduction/ compact	CB-024SA
SLW-6S, 8S	Silencer/high noise reduction/ compact	CB-024SA
SLW-H*	Silencer/push-in	CB-024SA
SM-25	Shuttle mover Standard/high load	CB-029SA
SMG	Compact cylinder/double acting/single rod	CB-029SA
SMG-F	Compact cylinder/double acting/fine speed	CB-029SA
SMG-M	Compact cylinder/double acting/rotation-stop	CB-029SA
SMG-X	Compact cylinder/single acting/push	CB-029SA
SMG-Y	Compact cylinder/single acting/pull	CB-029SA
SMW	Metering valve with silencer	CB-024SA
SMW2	Metering valve with silencer	CB-024SA
SNP	3-port solenoid valve with spool position detection	CB-024SA
SNS	Residual pressure exhaust valve with spool position detection	CB-024SA
SPK	Pilot kick 2-port solenoid valve for steam	CB-03-1SA
SR	Flame-resistant tube	CB-024SA
SRG3	High precision guided rodless cylinder (single guide)/double acting	CB-029SA
SRL3	Rodless cylinder/double acting	CB-029SA
SRL3-G	Rodless cylinder/double acting/with resin guide	CB-029SA
SRL3-GQ	Rodless cylinder/double acting/with resin guide/with position locking function	CB-029SA
SRL3-Q	Rodless cylinder/double acting/ with position locking function	CB-029SA
SRM3	High precision guided rodless cylinder (double guide)/double acting	CB-029SA
SRM3-Q	High precision guided rodless cylinder (double guide)/double acting/position locking	CB-029SA
SRT3	Rodless cylinder with brake/ double acting	CB-029SA
SSD	Compact cylinder/double acting/single rod	CB-029SA
SSD2	Compact cylinder/double acting/single rod	CB-029SA
SSD2-B	Compact cylinder/double acting/back to back	CB-029SA
SSD2-D	Compact cylinder/double acting/double rod	CB-029SA
SSD2-DG1	Compact cylinder/double acting/double rod/coil scraper	CB-029SA
SSD2-DG4	Compact cylinder/double acting/ double rod/anti-spatter adherence	CB-029SA
SSD2-DM	Compact cylinder/double acting/double rod/rotation-stop	CB-029SA
SSD2-F	Compact cylinder/double acting/fine speed	CB-029SA
SSD2-G	Compact cylinder/double acting/rubber scraper	CB-029SA
SSD2-G1	Compact cylinder/double acting/coil scraper	CB-029SA
SSD2-G1L4	Compact cylinder/double acting/with strong magnetic field proof switch/with coil scraper	CB-029SA
SSD2-G2/ G3	Compact cylinder/double acting/coolant proof	CB-029SA
SSD2-G4	Compact cylinder/double acting/anti-spatter adherence	CB-029SA
SSD2-G5	Compact cylinder/double acting/ environment-resistant scraper	CB-029SA
SSD2-K	Compact cylinder/double acting/single rod/high load	CB-029SA
SSD2-K-*C	Compact cylinder/double acting/ high load/rubber-air cushioned	CB-029SA

SSD2-KF	Compact cylinder/double acting/fine speed	CB-029SA
SSD2-KG1	Compact cylinder/double acting/high load/coil scraper	CB-029SA
SSD2-KG1L4	Compact cylinder/double acting/high load/with strong magnetic field proof switch/with coil scraper	CB-029SA
SSD2-KG2/KG3	Compact cylinder/double acting/high load/coolant proof	CB-029SA
SSD2-KG4	Compact cylinder/double acting/high load/anti-spatter adherence	CB-029SA
SSD2-KG5	Compact cylinder/double acting/high load/environment-resistant scraper	CB-029SA
SSD2-KL4	Compact cylinder/double acting/high load/with strong magnetic field proof switch	CB-029SA
SSD2-KU	Compact cylinder/double acting/high load/low friction	CB-029SA
SSD2-L	Compact cylinder/double acting/single rod/long stroke	CB-029SA
SSD2-L4	Compact cylinder/double acting/with strong magnetic field proof switch	CB-029SA
SSD2-M	Compact cylinder/double acting/rotation-stop	CB-029SA
SSD2-O	Compact cylinder/double acting/low speed	CB-029SA
SSD2-P7*	Compact cylinder/double acting/clean-room specifications	CB-029SA
SSD2-Q	Compact cylinder/double acting/with position locking	CB-029SA
SSD2-T1	Compact cylinder/double acting/heat resistance	CB-029SA
SSD2-T1L	Compact cylinder/double acting/with heat resistant cylinder switch	CB-029SA
SSD2-W	Compact cylinder/double acting/two-stage	CB-029SA
SSD2-X	Compact cylinder/single acting/push	CB-029SA
SSD2-Y	Compact cylinder/single acting/pull	CB-029SA
SSD-B	Compact cylinder/double acting/back to back	CB-029SA
SSD-D	Compact cylinder/double acting/double rod	CB-029SA
SSD-DG1	Compact cylinder/double acting/double rod/coil scraper	CB-029SA
SSD-DG4	Compact cylinder/double acting/double rod/anti-spatter adherence	CB-029SA
SSD-F	Compact cylinder/double acting/fine speed	CB-029SA
SSD-G1	Compact cylinder/double acting/coil scraper	CB-029SA
SSD-G1L4	Compact cylinder/double acting/with strong magnetic field proof for switch/with coil scraper	CB-029SA
SSD-G2/G3	Compact cylinder/double acting/coolant proof	CB-029SA
SSD-G4	Compact cylinder/double acting/anti-spatter adherence	CB-029SA
SSD-G5	Compact cylinder/double acting/single rod/environment-resistant scraper	CB-029SA
SSD-K	Compact cylinder/double acting/single rod/high load	CB-029SA
SSD-K-*C	Compact cylinder/double acting/high load/rubber-air cushioned	CB-029SA
SSD-KF	Compact cylinder/double acting/high load/fine speed	CB-029SA
SSD-KG1	Compact cylinder/double acting/high load/coil scraper	CB-029SA
SSD-KG1L4	Compact cylinder/double acting/high load/with strong magnetic field proof switch/with coil scraper	CB-029SA
SSD-KG2/KG3	Compact cylinder/double acting/high load/coolant proof	CB-029SA
SSD-KG4	Compact cylinder/double acting/high load/anti-spatter adherence	CB-029SA
SSD-KG5	Compact cylinder/double acting/high load/environment-resistant scraper	CB-029SA
SSD-KL4	Compact cylinder/double acting/high load/with strong magnetic field proof switch	CB-029SA
SSD-K-P12	Compact cylinder/oil-prohibited	CB-029SA
SSD-KU	Compact cylinder/double acting/low friction	CB-029SA
SSD-L4	Compact cylinder/double acting/with strong magnetic field proof switch	CB-029SA
SSD-LN	With length measuring sensor	CB-030SA

■ Listed catalog No.

CB-029SA : Pneumatic Cylinders I
CB-030SA : Pneumatic Cylinders II
CB-023SA : Pneumatic Valves
CB-024SA : Pneumatic, Vacuum and Auxiliary Components
CB-03-1SA : General Purpose Valves

■ Codes (pneumatic valves and general purpose valves)

Ⓓ: Discrete valves
Ⓡ: Reduced wiring manifolds
Ⓘ: Individual wiring manifolds
Ⓧ: Mix manifolds
Ⓑ: Block manifolds
Ⓜ: Manifolds

Model No. [index in alphabetical order]

Model No.	Model	Catalog No./page
S		
SSD-M	Compact cylinder/double acting/rotation-stop	CB-029SA
SSD-O	Compact cylinder/double acting/low speed	CB-029SA
SSD-Q	Compact cylinder/double acting/position locking	CB-029SA
SSD-T	Compact cylinder/double acting/heat resistance	CB-029SA
SSD-T1L	Compact cylinder/double acting/with heat resistant cylinder switch	CB-029SA
SSD-W	Compact cylinder/double acting/two-stage	CB-029SA
SSD-X	Compact cylinder/single acting/push	CB-029SA
SSD-Y	Compact cylinder/single acting/pull	CB-029SA
SSG	Guided super compact cylinder/double acting/single rod	CB-029SA
STA2	Stopper cylinder	CB-029SA
STG	Guided cylinder/double acting/single rod	CB-030SA
STG-*-*C	Guided cylinder/double acting/rubber-air cushioned	CB-030SA
STG-*C	Guided cylinder/double acting/air cushioned	CB-030SA
STG-*G	Guided cylinder/double acting/rubber scraper	CB-030SA
STG-*G1	Guided cylinder/double acting/coil scraper	CB-030SA
STG-*G2/G3	Guided cylinder/double acting/coolant proof	CB-030SA
STG-*G4	Guided cylinder/double acting/anti-spatter adherence	CB-030SA
STG-*Q	Guided cylinder/double acting/position locking	CB-030SA
STG-B-P7*	Guided cylinder/double acting/clean-room specifications	CB-030SA
STG-K	Guided cylinder/double acting/heavy duty guide rod	CB-030SA
STG-MG5	Guided cylinder/double acting/environment-resistant scraper	CB-030SA
STK	Stopper cylinder/double acting/round rod end form	CB-029SA
STK-JY	Stopper cylinder/single acting/pull/rod end form roller	CB-029SA
STK-JY1	Stopper cylinder/double acting/spring integrated/rod end form roller	CB-029SA
STK-M	Stopper cylinder/double acting/rod end form chamfered	CB-029SA
STK-MY	Stopper cylinder/single acting/pull/rod end form chamfered	CB-029SA
STK-MY1	Stopper cylinder/double acting/spring integrated/rod end form chamfered	CB-029SA
STK-Y	Stopper cylinder/single acting/pull/round rod end form	CB-029SA
STK-Y1	Stopper cylinder/double acting/spring integrated/round rod end form	CB-029SA
STL-*	Guided cylinder (long stroke)/double acting/single rod	CB-030SA
STL-*-*C	Guided cylinder (long stroke)/double acting/rubber-air cushioned	CB-030SA
STL-*C	Guided cylinder (long stroke)/double acting/air cushioned	CB-030SA
STL-*F	Guided cylinder (long stroke)/double acting/fine speed	CB-030SA
STL-*G/G1	Guided cylinder (long stroke)/double acting/scraper	CB-030SA
STL-*G2/G3	Guided cylinder (long stroke)/double acting/coolant proof	CB-030SA
STL-*G4	Guided cylinder (long stroke)/double acting/anti-spatter adherence	CB-030SA
STL-*O	Guided cylinder (long stroke)/double acting/low speed	CB-030SA
STL-*P	Guided cylinder (long stroke)/double acting/stroke adjustable/push	CB-030SA
STL-*Q	Guided cylinder (long stroke)/double acting/position locking	CB-030SA
STL-*T	Guided cylinder (long stroke)/double acting/heat resistance	CB-030SA
STL-*T2	Guided cylinder (long stroke)/double acting/packing material fluoro rubber	CB-030SA
STL-*V	Guided cylinder (long stroke)/with valve/double acting	CB-030SA
STM-B-P7*	Guided cylinder/double acting/single rod/clean-room specifications	CB-030SA
STM-M/B	Guided cylinder/double acting/single rod	CB-030SA
STR2-*	Twin rod cylinder/double acting/single rod	CB-030SA

STR2-*D	Twin rod cylinder/double acting/double rod	CB-030SA
STR2-*F	Twin rod cylinder/double acting/fine speed	CB-030SA
STR2-*O	Twin rod cylinder/double acting/low speed	CB-030SA
STR2-*Q	Twin rod cylinder/double acting/position locking	CB-030SA
STS-*	Guided cylinder (short stroke)/ double acting/single rod	CB-030SA
STS-*-*C	Guided cylinder (short stroke)/ double acting/rubber-air cushioned	CB-030SA
STS-*C	Guided cylinder (short stroke)/ double acting/air cushioned	CB-030SA
STS-*F	Guided cylinder (short stroke)/ double acting/fine speed	CB-030SA
STS-*G/G1	Guided cylinder (short stroke)/double acting/scraper	CB-030SA
STS-*G2/G3	Guided cylinder (short stroke)/ double acting/coolant proof	CB-030SA
STS-*G4	Guided cylinder (short stroke)/ double acting/anti-spatter adherence	CB-030SA
STS-*O	Guided cylinder (short stroke)/ double acting/low speed	CB-030SA
STS-*P	Guided cylinder (short stroke)/ double acting/stroke adjustable/push	CB-030SA
STS-*Q	Guided cylinder (short stroke)/ double acting/position locking	CB-030SA
STS-*T	Guided cylinder (short stroke)/ double acting/heat resistance	CB-030SA
STS-*T2	Guided cylinder (short stroke)/double acting/packing material fluoro rubber	CB-030SA
STS-*V	Guided cylinder (short stroke)/ with valve/double acting	CB-030SA
SU301, 302D	High polymer membrane dryer/unit	CB-024SA
SU301, 302E	High polymer membrane dryer/unit	CB-024SA
SU3015 to 3075	High polymer membrane dryer/unit	CB-024SA
SU401, 402D	High polymer membrane dryer/unit	CB-024SA
SU401, 402E	High polymer membrane dryer/unit	CB-024SA
SU4050, 4100	High polymer membrane dryer/unit	CB-024SA
SUH	Transfer module	CB-029SA
SVB*A	Air operated 2-port valve with solenoid valve for air/gas (cylinder valve)	CB-03-1SA
SVB*S	Air operated 2-port valve with solenoid valve for steam/water/air (cylinder valve)	CB-03-1SA
SVB*V	Air operated 2-port valve with solenoid valve for low vacuum (cylinder valve)	CB-03-1SA
SVB*W	Air operated 2-port valve with solenoid valve for water/liquid (cylinder valve)	CB-03-1SA
SWD	Weir diaphragm valve	CB-03-1SA

T

T0V/H/C	Cylinder switch/1-color display/reed 2-wire	CB-029SA
T1 V/H	Cylinder switch/1-color display/2-wire proximity sensor	CB-029SA
T2 V/H R	Cylinder switch/bend resistant lead wire/2-wire proximity sensor	CB-029SA
T2, 3 V/H/C	Cylinder switch/1-color display/2, 3-wire proximity sensor	CB-029SA
T2, 3Y (W) V/H	Cylinder switch/2-color display/2, 3-wire proximity sensor	CB-029SA
T2, 3YL V/H	Cylinder switch/coolant proof/2, 3-wire proximity sensor	CB-029SA
T2J V/H	Cylinder switch/off-delay/2-wire proximity sensor	CB-029SA
T2YD (T)	Cylinder switch/strong magnetic field proof/2-wire proximity sensor	CB-029SA
T3P V/H	Cylinder switch/PNP output 3-wire proximity sensor	CB-029SA
T5V/H/C	Cylinder switch/no display/reed 2-wire	CB-029SA
T8 V/H	Cylinder switch/1-color display/reed 2-wire	CB-029SA
TAC-25	Medium pressure gas shut off control system	CB-03-1SA
TLPS	Cutting tool breakage detection switch/single unit	CB-024SA

U

U	Urethane tube	CB-024SA
UCA2	Unit cylinder/double acting/ single rod/metal bush bearing	CB-030SA

■ Listed catalog No.

CB-029SA : Pneumatic Cylinders I
CB-030SA : Pneumatic Cylinders II
CB-023SA : Pneumatic Valves
CB-024SA : Pneumatic, Vacuum and Auxiliary Components
CB-03-1SA : General Purpose Valves

■ Codes (pneumatic valves and general purpose valves)

Ⓓ: Discrete valves
Ⓡ: Reduced wiring manifolds
Ⓘ: Individual wiring manifolds
Ⓧ: Mix manifolds
Ⓑ: Block manifolds
Ⓜ: Manifolds

Model No. [index in alphabetical order]

Model No.	Model	Catalog No./page
U		
UCA2-B	Unit cylinder/double acting/single rod/ball bearing	CB-030SA
UCAC2	Position locking clamp cylinder/double acting/single rod	CB-030SA
UCAC-N32/40	Lightweight clamp cylinder/position locking/double acting/single rod	CB-030SA
UFCD	Free position flat cylinder with position locking/double acting/single rod	CB-030SA
UGPS2	Contact confirmation switch/unit	CB-024SA
UGPS3	Digital gap switch/unit	CB-024SA
UHPS	Close contact confirmation switch/unit	CB-024SA
ULK	Brake cylinder/double acting/single rod	CB-030SA
ULKP	Brake cylinder/double acting/single rod (ø16)	CB-030SA
ULK-V	Brake cylinder/with valve/double acting	CB-030SA
UMB1	High corrosion resistant miniature direct acting 2-port solenoid valve for medical equipment	CB-03-1SA
UMG1	High corrosion resistant miniature direct acting 3-port solenoid valve for medical equipment	CB-03-1SA
UP	Antistatic fiber tube (for push-in fitting)	CB-024SA
UP--F1/F2**	Antistatic tube	CB-024SA
UP-9102-20-*-F1	Antistatic fiber tube	CB-024SA
UP-9102-SR	Flame-resistant fiber tube (For push-in fitting)	CB-024SA
US	Compact direct acting 2, 3-port solenoid valve (resin body)	CB-03-1SA
USB2	Compact direct acting 2-port solenoid valve	CB-03-1SA
USB3	Compact direct acting 2-port solenoid valve	CB-03-1SA
USC	Free position locking medium bore size cylinder/double acting/single rod	CB-030SA
USC-G1	Free position locking medium bore size cylinder/double acting/with coil scraper	CB-030SA
USG2	Compact direct acting 3-port solenoid valve	CB-03-1SA
USG3	Compact direct acting 3-port solenoid valve	CB-03-1SA
USSD	Position locking compact cylinder/double acting/single rod	CB-030SA
USSD-K	Position locking compact cylinder/double acting/single rod/high load	CB-030SA
UTLPS	Cutting tool breakage detection switch/unit	CB-024SA
V		
V0	Compact cylinder switch/strong magnetic field proof/reed 2-wire	CB-029SA
V1000, 3000-W	Residual pressure exhaust valve/Standard White Series	CB-024SA
V3010, 6010-W	Residual pressure exhaust valve with locking hole/With keyhole, OSHA quasi	CB-024SA
V3301, 3321-W	Slow start valve	CB-024SA
VFA1000 to 4000	Vacuum filter	CB-024SA
VG41D	Vacuum pressure gauge with limit marker	CB-024SA
VLA	Solenoid valve for gas combustion system	CB-03-1SA
VLM	Medium pressure gas safety cutoff control system	CB-03-1SA
VNA	Solenoid valve for gas combustion system	CB-03-1SA
VNA-R/RH	Solenoid valve for gas combustion system	CB-03-1SA
VNM	Medium pressure gas safety cutoff control system	CB-03-1SA
VNM-25-K	Safety residual pressure exhaust valve (increased fire safety specifications)	CB-03-1SA
VNR	Solenoid valve for gas combustion system NO (closed when energized)	CB-03-1SA
VRA2000	Vacuum regulator	CB-024SA
W		
W1000 to 8000-P6	Filter/regulator/copper and PTFE free series	CB-024SA
W1000 to 8000-W	Filter/regulator/Standard White Series	CB-024SA
W1100 to 8100-P6	Reverse filter/regulator/copper and PTFE free series	CB-024SA
W1100 to 8100-W	Reverse filter/regulator/Standard White Series	CB-024SA
W2P513*	Ⓓ Pilot operated 5-port valve/double	1638
W3000 to 8000-G4	Filter/regulator/flame-resistant series	CB-024SA
W3100 to 8100-G4	Reverse filter/regulator/Flame-resistant Series	CB-024SA
W4GB2	Ⓓ Pilot operated 3, 5-port valve/base piping	972
W4GB4	Ⓓ Pilot operated 5-port valve/base side piping	1118
W4GZ4	Ⓓ Pilot operated 5-port valve/base bottom piping	1118
WB500	Compact filter/regulator	CB-024SA
WFC	Capacitance electromagnetic flow sensor	CB-024SA

WFK2	Karman vortex flow rate sensor for water	CB-024SA
WFK3000	Karman vortex flow rate sensor for water, compact/device built-in	CB-024SA
WR1/2	Regulator for water	CB-024SA
WW4000, 8000	Filter/regulator Outdoor Series	CB-024SA
WXU	Integrated unit for water control	CB-03-1SA
Y		
YS	Y shaped strainer	CB-03-1SA
Z		
ZB4-B	Switch head	CB-024SA
ZCK	Rotary head lever actuator	CB-024SA
ZJ-L*	Tightening fitting (stainless steel)/elbow	CB-024SA
ZJ-N*	Tightening fitting (stainless steel)/sleeve integrated with nut	CB-024SA
ZJ-S*	Tightening fitting (stainless steel)/straight	CB-024SA
ZJ-T*	Tightening fitting (stainless steel)/tee	CB-024SA
ZSP	Fitting (stainless steel)	CB-024SA
ZW-L*	Fitting (stainless steel)/elbow	CB-024SA
ZW-S*	Fitting (stainless steel)/straight	CB-024SA
ZW-T*	Fitting (stainless steel)/tee	CB-024SA

■ Listed catalog No.

CB-029SA : Pneumatic Cylinders I
CB-030SA : Pneumatic Cylinders II
CB-023SA : Pneumatic Valves
CB-024SA : Pneumatic, Vacuum and Auxiliary Components
CB-03-1SA : General Purpose Valves

■ Codes (pneumatic valves and general purpose valves)

Ⓓ: Discrete valves
Ⓡ: Reduced wiring manifolds
Ⓘ: Individual wiring manifolds
Ⓧ: Mix manifolds
Ⓑ: Block manifolds
Ⓜ: Manifolds

Pneumatic Valves Catalog No. CB-023SA 9

Date of issue October 14, 1996 1st edition
January 31 2017 9th edition
May 31, 2021 9th edition Ver. 2
October 28, 2021 9th edition Ver.2 2-print

Place of issue **CKD Corporation**
2-250 Ouji, Komaki City, Aichi 485-8551, Japan
https://www.ckd.co.jp/en/

Fixed price 1,000 yen (tax not included)

© **CKD Corporation** 2022 Printed in Japan
Unauthorized copying prohibited
The specifications and appearances listed in this catalog may change without prior notice in order for improvements to be made.

CKD WARRANTY

Subject to the conditions below, CKD Corporation ("CKD") warrants the first end user (the "Buyer") that CKD's products are free from defects in material and workmanship.

"Warranty Period" is one (1) year from the first delivery to the customer.

CKD will, at CKD's option, either repair or replace a defective product, including lowest transportation costs but not including installation or any other similar charges, provided that (1) the buyer notifies CKD in writing of the claimed defect within one year from the date Buyer received the product, (2) provides a complete explanation of the defect, the application of the product, and such other information concerning use of the product as CKD may request, and (3) returns the product to CKD in accordance with CKD's specific written instructions and authorization obtained from CKD prior to return of the product, and CKD's inspection confirms that the product was defective.

This warranty applies only if the product was used and applied correctly under normal operating conditions and good engineering practice; was installed, operated and maintained in accordance with all instructions issued or published by CKD; was used within stated pressure, media and operating limitations published by CKD and in effect on the date of shipment; and was not subject to abuse, misuse or unauthorized modification.

THIS WARRANTY IS THE ONLY AUTHORIZED CKD WARRANTY AND IN LIEU OF ALL OTHER WARRANTIES, EXPRESSED OR IMPLIED, INCLUDING ANY IMPILIED WARRANTY OF MERCHANTABILITY OR FITNESS FOR A PARTICULAR PURPOSE, notwithstanding any disclosure to CKD of the use to which the product is to be put. The Buyer's **SOLE AND EXCLUSIVE REMEDY** on any claim of any kind for any loss or damage arising out of the manufacture, sale, delivery or use of CKD's products shall be for the repair or replacement of any defective products as provided herein.

IN NO EVENT SHALL CKD BE LIABLE FOR BUSINESS INTERRUPTIONS, LOSS OF PROFITS, PERSONAL INJURY, COSTS OF DELAY OR FOR ANY OTHER SPECIAL, INDIRECT, INCIDENTAL OR CONSEQUENTIAL LOSSES, COSTS OR DAMAGES. There are no warranties, expressed or implied, made by CKD other than the warranty against defects in material and workmanship set forth above, and CKD neither assumes nor authorizes any other person or firm to assume for it any other obligations or liability.

CKD shall not be liable for any trouble, malfunction and damages of CKD products caused, directly or indirectly, by disaster or any other causes not attributable to CKD’s responsibility. CKD also shall not be responsible for any trouble, malfunction and damages of CKD Products caused by the lack or malfunction of safety circuit or structure or function that should be commonly equipped in the Buyer's equipment in which the CKD products were used.

CKD MAINTAINS A POLICY OF ONGOING PRODUCT DEVELOPMENT AND INPROVEMENT. WE THEREFORE RESERVE THE RIGHT TO CHANGE DIMENSIONS, SPECIFICATIONS AND DESIGN WITHOUT NOTICE.

WORLD-NETWORK



CKD Corporation

Website https://www.ckd.co.jp/en/

□ 2-250 Ouji, Komaki City, Aichi 485-8551, Japan
□ PHONE +81-568-74-1338 FAX +81-568-74-1165

ASIA

喜開理(上海)機器有限公司
CKD(SHANGHAI)CORPORATION

- 営業部/上海浦西事務所(SALES HEADQUARTERS / SHANGHAI PUXI OFFICE)
  Room 612, 6th Floor, Yuanzhongkeyan Building, No. 1905 Hongmei Road, Xuhui District, Shanghai 200233, China
  PHONE +86-21-60906046 FAX +86-21-60906046
- 上海浦東事務所(SHANGHAI PUDONG OFFICE)
- 寧波事務所(NINGBO OFFICE)
- 杭州事務所(HANGZHOU OFFICE)
- 無錫事務所(WUXI OFFICE)
- 昆山事務所(KUNSHAN OFFICE)
- 蘇州事務所(SUZHOU OFFICE)
- 南京事務所(NANJING OFFICE)
- 合肥事務所(HEFEI OFFICE)
- 成都事務所(CHENGDU OFFICE)
- 武漢事務所(WUHAN OFFICE)
- 鄭州事務所(ZHENGZHOU OFFICE)
- 長沙事務所(CHANGSHA OFFICE)
- 重慶事務所(CHONGQING OFFICE)
- 西安事務所(XIAN OFFICE)
- 広州事務所(GUANGZHOU OFFICE)
- 中山事務所(ZHONGSHAN OFFICE)
- 深圳西事務所(WEST SHENZHEN OFFICE)
- 深圳東事務所(EAST SHENZHEN OFFICE)
- 東莞事務所(DONGGUAN OFFICE)
- 廈門事務所(XIAMEN OFFICE)
- 福州事務所(FUZHOU OFFICE)
- 瀋陽事務所(SHENYANG OFFICE)
- 大連事務所(DALIAN OFFICE)
- 長春事務所(CHANGCHUN OFFICE)
- 北京事務所(BEIJING OFFICE)
- 天津事務所(TIANJIN OFFICE)
- 青島事務所(QINGDAO OFFICE)
- 濰坊事務所(WEIFANG OFFICE)
- 済南事務所(JINAN OFFICE)
- 烟台事務所(YANTAI OFFICE)

CKD INDIA PRIVATE LTD.

- HEADQUARTERS
  Unit No. 607, 6th Floor, Welldone Tech Park, Sector 48, Sohna Road, Gurgaon-122018, Haryana, India
  PHONE +91-124-418-8212
- BANGALORE OFFICE
- PUNE OFFICE
- CHENNAI OFFICE
- MUMBAI OFFICE
- HYDERABAD OFFICE

PT CKD TRADING INDONESIA

- HEAD OFFICE
  Menara Bidakara 2, 18th Floor, Jl. Jend. Gatot Subroto Kav. 71-73, Pancoran, Jakarta 12870, Indonesia
  PHONE +62-21-2938-6601 FAX +62-21-2906-9470
- MEDAN OFFICE
- BEKASI OFFICE
- KARAWANG OFFICE
- SEMARANG OFFICE
- SURABAYA OFFICE

CKD KOREA CORPORATION

- HEADQUARTERS
  (3rd Floor), 44, Sinsu-ro, Mapo-gu, Seoul 04088, Korea
  PHONE +82-2-783-5201～5203 FAX +82-2-783-5204
- 水原営業所(SUWON OFFICE)
- 天安営業所(CHEONAN OFFICE)
- 蔚山営業所(ULSAN OFFICE)

M-CKD PRECISION SDN.BHD.

- HEAD OFFICE
  Lot No.6,Jalan Modal 23/2, Seksyen 23, Kawasan MIEL, Fasa 8, 40300 Shah Alam,Selangor Darul Ehsan, Malaysia
  PHONE +60-3-5541-1468 FAX +60-3-5541-1533
- JOHOR BAHRU BRANCH OFFICE
- PENANG BRANCH OFFICE

CKD SINGAPORE PTE. LTD.

No.33 Tannery Lane #04-01 Hoesteel Industrial Building, Singapore 347789, Singapore
PHONE +65-67442623 FAX +65-67442486

CKD CORPORATION BRANCH OFFICE

No.33 Tannery Lane #04-01 Hoesteel Industrial Building, Singapore 347789, Singapore
PHONE +65-67447260 FAX +65-68421022

CKD THAI CORPORATION LTD.

- HEADQUARTERS
  19th Floor, Smooth Life Tower, 44 North Sathorn Road, Silom, Bangrak, Bangkok 10500, Thailand
  PHONE +66-2-267-6300 FAX +66-2-267-6304-5
- NAVANAKORN OFFICE
- EASTERN SEABOARD OFFICE
- LAMPHUN OFFICE
- KORAT OFFICE
- AMATANAKORN OFFICE
- PRACHINBURI OFFICE
- SARABURI OFFICE

台湾喜開理股份有限公司
TAIWAN CKD CORPORATION

- HEADQUARTERS
  16F-3, No. 7, Sec. 3, New Taipei Blvd., Xinzhuang Dist., New Taipei City 242, Taiwan
  PHONE +886-2-8522-8198 FAX +886-2-8522-8128
- 新竹営業所(HSINCHU OFFICE)
- 台中営業所(TAICHUNG OFFICE)
- 台南営業所(TAINAN OFFICE)
- 高雄営業所(KAOHSIUNG OFFICE)

CKD VIETNAM ENGINEERING CO.,LTD.

- HEADQUARTERS
  18th Floor, CMC Tower, Duy Tan Street, Cau Giay District, Hanoi, Vietnam
  PHONE +84-24-3795-7631 FAX +84-24-3795-7637
- HO CHI MINH OFFICE

EUROPE

CKD EUROPE B.V.

- HEADQUARTERS
  Beechavenue 125A, 1119 RB Schiphol-Rijk, the Netherlands
  PHONE +31-23-554-1490
- CKD EUROPE GERMANY OFFICE
- CKD EUROPE UK
- CKD EUROPE CZECH O.Z.

CKD CORPORATION EUROPE BRANCH

Beechavenue 125A, 1119 RB Schiphol-Rijk, the Netherlands
PHONE +31-23-554-1490

CKD ITALIA S.R.L.

Via di Fibbiana 15 Calenzano (FI) CAP 50041, Italy
PHONE +39 0558825359 FAX +39 0558827376

NORTH AMERICA & LATIN AMERICA

CKD MEXICO, S. DE R.L. DE C.V.

Cerrada la Noria No. 200 Int. A-01, Querétaro Park II, Parque Industrial Querétaro, Santa Rosa Jáuregui, Querétaro, C.P. 76220, México
PHONE +52-442-161-0624

CKD USA CORPORATION

- HEADQUARTERS
  1605 Penny Lane, Schaumburg, IL 60173, USA
  PHONE +1-847-648-4400 FAX +1-847-565-4923
- LEXINGTON OFFICE
- SAN ANTONIO OFFICE
- SAN JOSE OFFICE/ TECHNICAL CENTER
- DETROIT OFFICE
- BOSTON OFFICE

The goods and/or their replicas, the technology and/or software found in this catalog are subject to complementary export regulations by Foreign Exchange and Foreign Trade Law of Japan. If the goods and/or their replicas, the technology and/or software found in this catalog are to be exported from Japan, Japanese laws require the exporter makes sure that they will never be used for the development and/or manufacture of weapons for mass destruction.

●Specifications are subject to change without notice. © CKD Corporation 2024 All copy rights reserved.

2024.3

CKD Corporation

https://www.ckd.co.jp/en/

2-250 Ouji, Komaki City,
Aichi 485-8551, Japan