CKD

Index Drives General Catalog

Roller gear cam drive

Parallel cam drive

Pick and Place drive

Ver. 8

Catalog No. CB-019SA-8

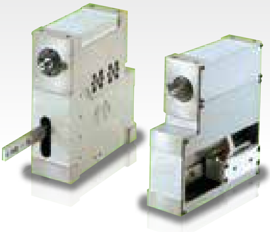

Guide to CKD Components General Catalog

CKD offers a wide variety of products
to meet your various needs.
Select the ideal product
according to your application.

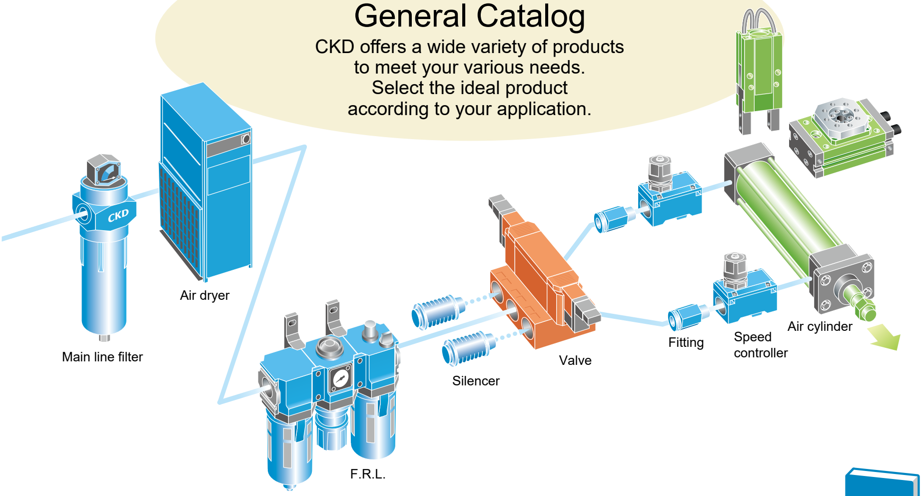

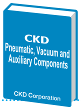

Pneumatic, Vacuum and Auxiliary Components

F.R.L. units
Modular design
(F.R.L.)
Drain separator
Anti-bacterial /
bacteria-removing filter
Compact regulator /
Filter regulator
Large bore size filter / Regulator
Precision regulator
Mechanical pressure switch
Residual pressure exhaust valve
Adapter/joiner
Pressure gauge
Vacuum filter /
Regulator
Clean filter /
Regulator
Electro pneumatic regulator

Pneumatic auxiliary components
Speed controller
Silencer
Auxiliary valve
Fitting/tube
Air blow nozzle

Air unit components
Clean air unit
Air unit

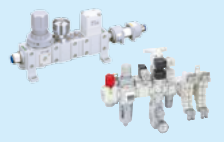

Precision components
Glass float module
Precise suction plate
Magnetic spring buffer

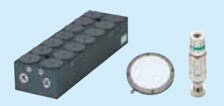

Pressure sensors
Electronic pressure switch
Contact/close contact check/
cutting tool breakage
detection switch
Air sensor
Pressure switch for coolant

Sensor/controller components
Gas flow sensor
Gas flow controllers
Water flow rate sensor

Total air systems
Total air system
(detector/circuit device)
γ system
(PLC components/
signal control components)

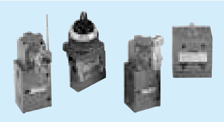

Gas generator
Nitrogen gas extraction
unit
Oxygen concentration
monitor

Main line units
Air dryer
High polymer membrane
Air dryer unit
Main line filter
Drain discharger

● Catalogs for chemical liquids for semiconductors and valves for process gases are also available.

Pneumatic Cylinders Ⅰ and Ⅱ

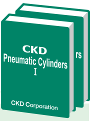
CKD
Pneumatic Cylinders
Ⅰ
CKD Corporation

Pneumatic Cylinders Ⅰ

- Standard
- With valve
- Space saving structure
- Rodless type
- Related products
  - Shock absorber
  - Free joint
  - Simplified floating joint
  - Speed controller
- Cylinder switches

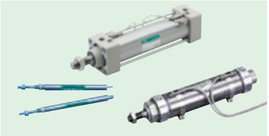
Standard


Space saving structure

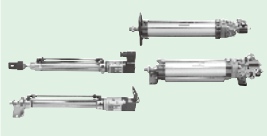
With valve

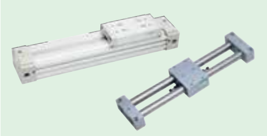
Rodless

Pneumatic Cylinders Ⅱ

- Combined functions
- Braking and position locking
- High speed
- Special type
- Oscillation/rotation drive
- Modular unit
- Length measuring function
- Hands/chucks
- Related products
  - Shock absorber
  - Free joint
  - Simplified floating joint
  - Speed controller
- Cylinder switches

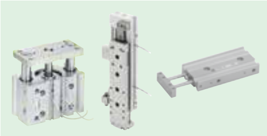
Combined functions


Oscillation/rotation drive

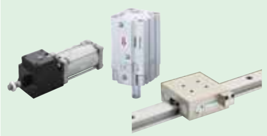
With brake/position locking


Hand/chuck

Pneumatic Valves

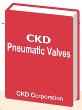
CKD
Pneumatic Valves
CKD Corporation

- Pilot operated
- Direct acting
- Explosion-proof
- Manual selector
- Related products

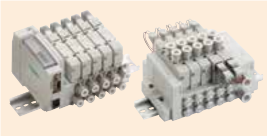
3, 4, 5-port pilot operated valve


Reduced wiring valve

General Purpose Valves

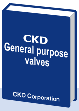
CKD
General purpose valves
CKD Corporation

- 2, 3-port solenoid valves for various fluid control
  - Direct acting 2, 3-port solenoid valve
  - Pilot operated 2-port solenoid valve
  - Air driven 2, 3-port valve
  - Motorized ball valve
  - Components for Life Science
  - Related products for water
  - Gas combustion system
  - Automatic watering control device
  - Products for outdoor use
  - Special fluid control valve


2, 3-port direct acting solenoid valve


2-port air operated valve

Index Units (Index Drive)


CKD
Indexman
CKD Corporation

- Roller gear cam units
- Parallel cam units
- Pick and place units
- Direct drive actuators
- Drivers/controllers/dedicated terminals

Overview
Safety precautions
Technical Explanation
Size selection
Roller gear cam Drive
Compact
Standard
Table
Wide angle
Basic
Parallel cam Drive
Pick and Place drive
Circular
Linear
Options

INDEX Drives

● CONTENTS

Refer to the back of each section for drive details.

OUTLINE

Overview A

Product overview

● CKD labor saving products

● CKD power-saving products are manufactured with the highest precision employing technologies in automated machines, valves, cylinders and solenoids.
We meet customers' demands with our comprehensive product series and their assured quality.

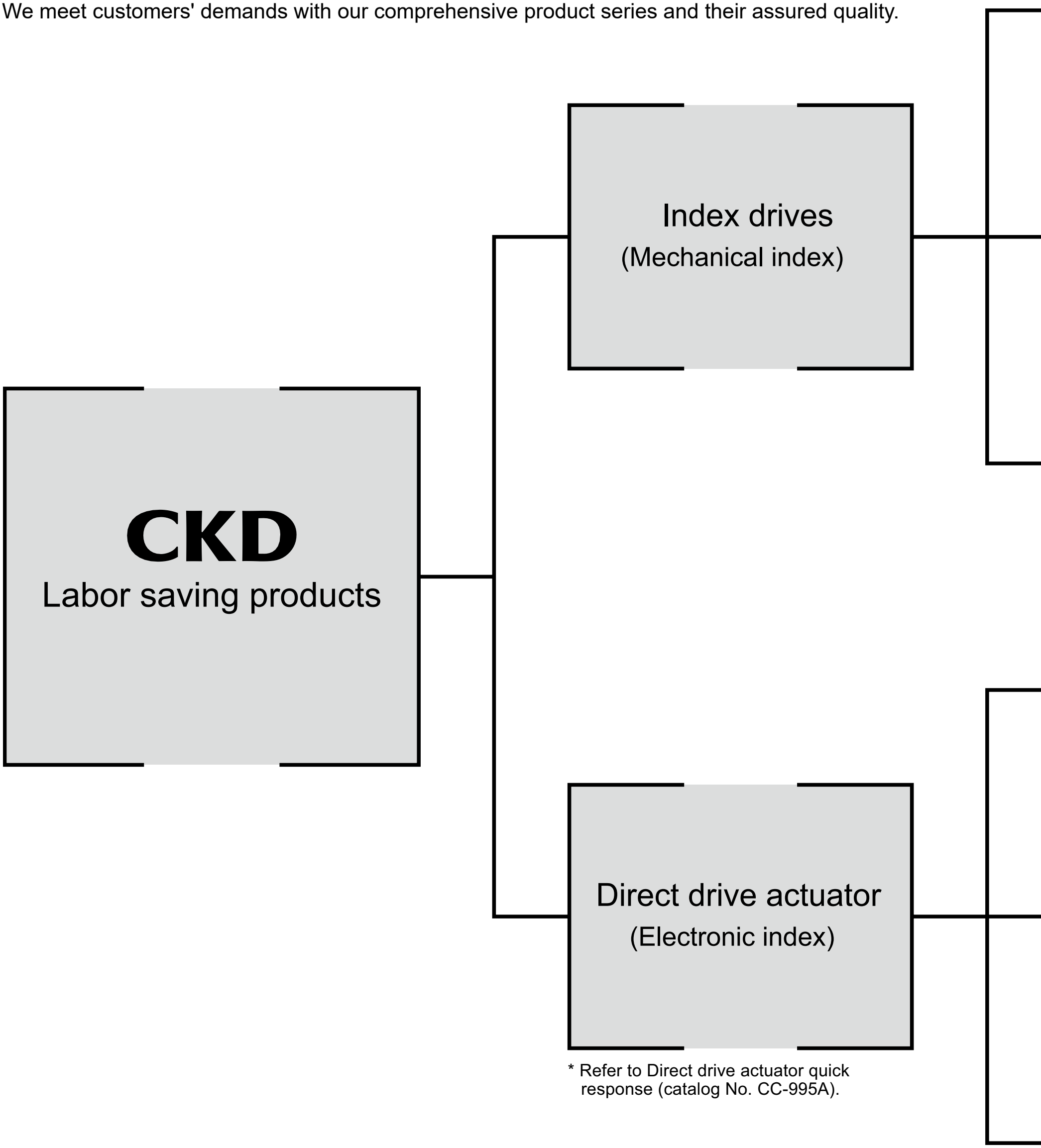

* Refer to Direct drive actuator quick response (catalog No. CC-995A).

Roller gear cam drive

Parallel cam drive

Pick and place drive

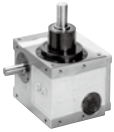

Direct drive actuator

Driver/controller

Dedicated terminal

Product overview

● Index drive series variation

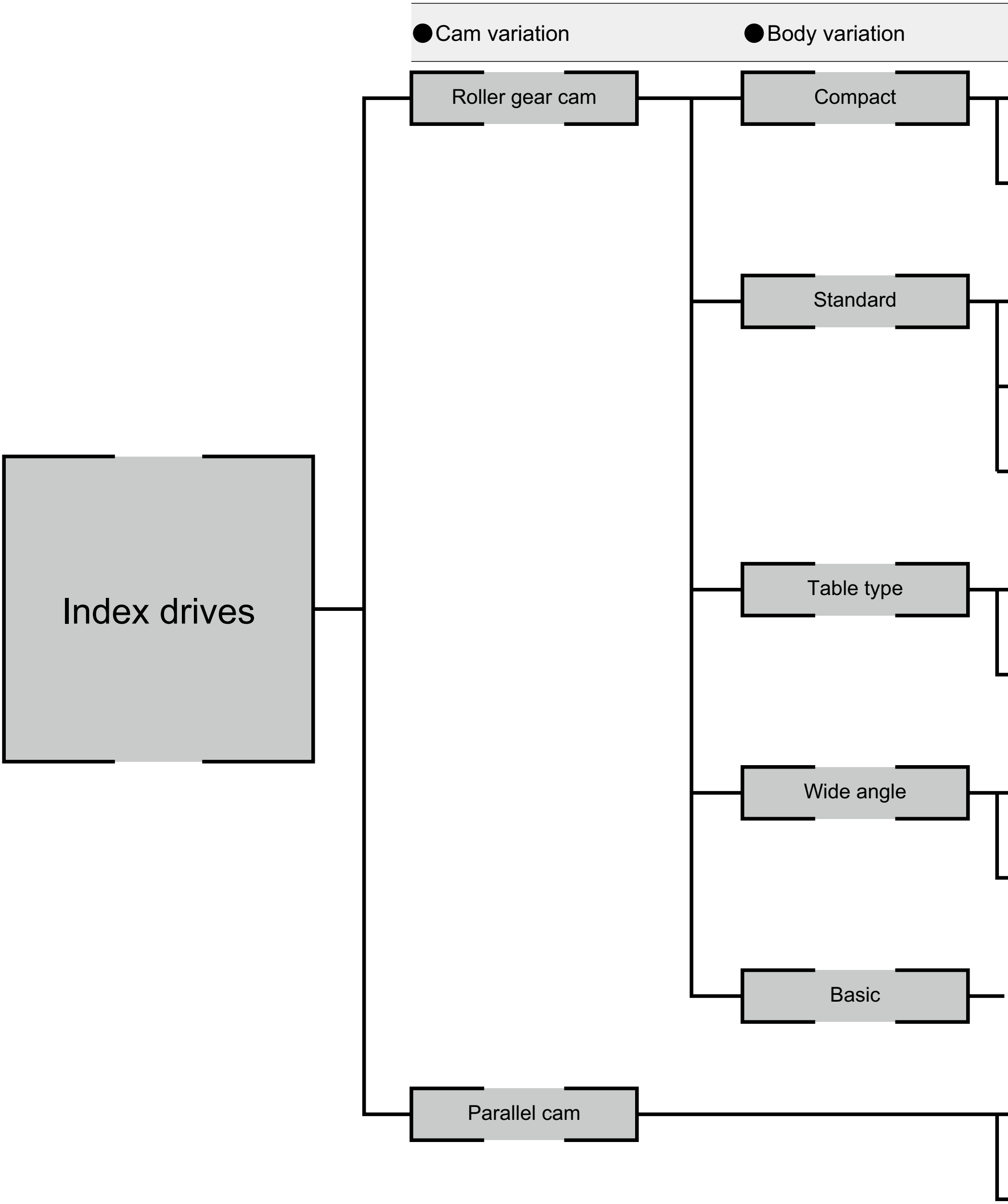

● Cam motion variation	● Model/size		● Shape of the output shaft		
			Straight	Flange	
Index series	RGIS	025 032	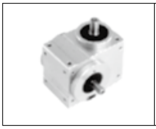	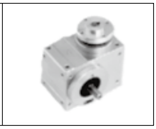	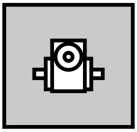
Oscillating series	RGOS				
Index series	RGIS	040 050 063 080 110 140 180 250		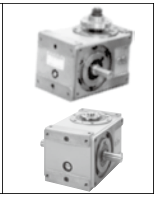	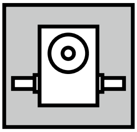
Oscillating series	RGOS				
Reducer series	RGCS				
Index series	RGIT	063 080 110 140 180 250		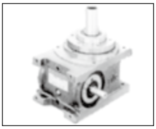	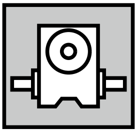
Reducer series	RGCT				
Index series	RGIL	063 080 110 140 180 250	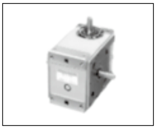		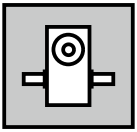
Oscillating series	RGOL				
Index series	RGIB	250		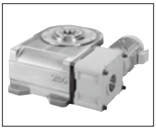	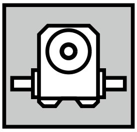
Index series	PCIS	040 050 063 080 100 125 160 200 250	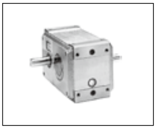		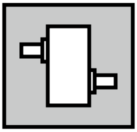
Oscillating series	PCOS				

Product overview

● Index drive selection procedure

				● Page
Models	Selection guide	● Index drive series variation		A-5
		● Feature table		A-8
		● Description of each type		A-19
		● Index number and angle combinations		A-9
Working condition	Confirming operating conditions	● Index number		B-5
		● Index angle		B-5
		● Input shaft rotational speed (cycle time)		B-6
		● Cam curve		B-11
	Confirming load conditions	●Weight, dial plate diameter, table support, external load, etc.		C-3
Size selection procedure	Dynamic rated torque output	● Calculating moment of inertia		C-4
		● Calculating max. angular acceleration		C-4
		● Calculating load torque	● Calculating inertia torque	C-4
			● Calculating frictional torque	C-4
			● Calculating work torque	C-5
		● Selecting the usage factors		C-6
		● Calculating actual load torque		C-6
		● Size selection	● Checking service life	C-7
			● Checking max. table diameter	C-7
	Static rated torque output	● Applied load torque when the input shaft is stopped		
	Checking the characteristics	● Thrust force		B-27
		● Radial force		B-27
		● Bending moment		B-28
		● Accuracy		B-29
Peripheral devices	Selecting peripheral devices	● Overload protection unit		D-633
		● Worm reducer		C-9
		● Calculating the motor capacity		C-9
Model No.	How to write out the model No.	● Model No. table — ● Roller gear cam drive	● Compact	D-5
			● Standard	D-41
			● Table type	D-275
			● Wide angle	D-353
			● Basic	D-391
		● Model No. table — ● Parallel cam drive		D-407

Using index drive selection guide service

● Feature table

Unit	Roller gear cam					Parallel cam
Type	Compact	Standard	Table	Wide angle	Basic	
Specifications		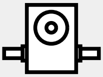	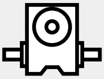	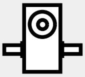	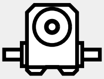	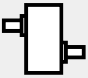
Table drive	○	◎	◎		◎	
Conveyer drive	○	○		○		◎
Hollow shaft		○	◎		◎	
Wide angle	○			◎		○
Torque saver	○	○	○	○		○
Select mounting surface	○	◎		◎		◎
Slim design					◎	
High speed	○	◎	○			○
Motor body	◎	○	○		○	
Aluminum light weight	◎	○				
Oilless	◎					
Cost (CKD comparison)	◎	◎	○	○	◎	◎
Delivery schedule (CKD comparison)	◎	◎	○	○	○	◎

Product overview

● Range of the index number / index angle combinations

Index series single-dwell cam

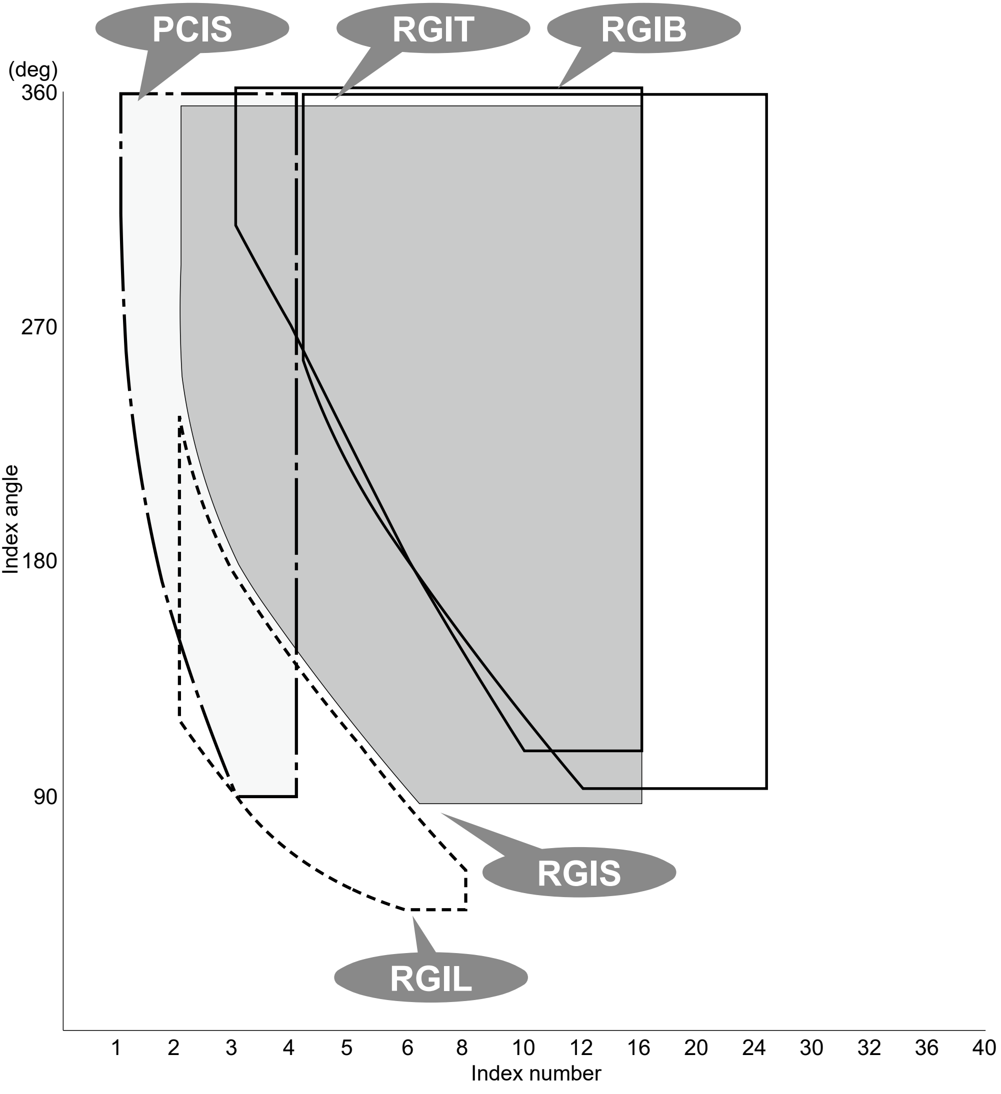

This shows the range of the index number and index angle combinations of the index drive (single-dwell cam).

Find the most suitable model for the combination of required index number and index angle, and determine the operational conditions for the index drive. For the “index number and index angle,” refer to the “Technical Explanation” section.

Options

Options	Worm reducer	**CRG25/32**	 
		HO32 to 135	 
		TE35 to 150	
	Torque saver	**TSF2 to 18**	 
		TST6 to 11	
		TGX20 to 70	 
	Others	**With geared motor or With switch**	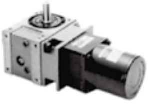 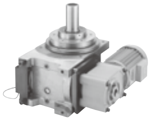

Others	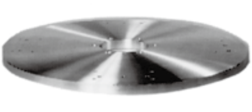	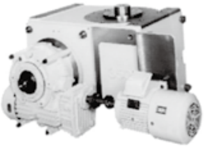	

Basic Operation of the Index Drives

● Single-dwell cam index / multi-dwell cam index

The basic functions of the index drives are classified into 3 categories: indexer, oscillator and reducer based on its operation. CKD offers all 3 types of index drives with a wide variety of models.

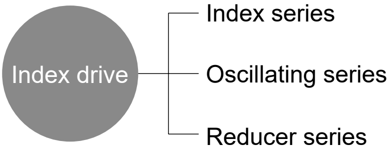

* Note: In this catalog, the term "index" means "precise motion or rotation to a new specified position with the use of cams" with a drive which can achieve this.

Indexing

The index drive repeats a sequence of motions of rotating the output shaft by certain degrees while the input shaft is continuously rotating at a constant speed. The cam attached to the input shaft has a geometrically defined motion curve. The cam follower on the output shaft converts this curve into the optimal movement.
This mechanism has the following characteristics:

1 Synchronization properties

The rotation of the input shaft is functionally converted into the operation of output shaft. Since the motion is determined in time, it is possible to synchronize this motion with others.

2 Motion characteristics

The smooth curve of the cam allows the output shaft to rotate and stop at high speeds and with high frequency. Speed and acceleration can be controlled with the appropriate motion curve.

3 Repeatability

The index drive repeats a sequence of motions of rotating and stopping the output shaft at the specified degree and speed while the input shaft is continuously rotating at a constant speed. This also enables outstanding accuracy.

Among the index drives using a cam, the roller gear cam, the parallel cam and the barrel cam are very popular.
In terms of the mechanism, they are different, but combining "index number," "index angle," and "cam curve," they all can achieve various operations.

Single-dwell cam index and multi-dwell cam index

For a general index drive, the index angle which corresponds to 1 full 360 degree turn of the input shaft and single dwell angle which corresponds to a dwell interval are set up. This is called a "single-dwell (1 dwell) cam."

However, when you need multiple index numbers, you can set up multiple index angles and dwell angles. This is called a "multi-dwell cam." Compared to a single-dwell cam, the multi-dwell cam is inferior in accuracy but superior in rigidity. We suggest that you compare and consider type, size and accuracy depending on your application.

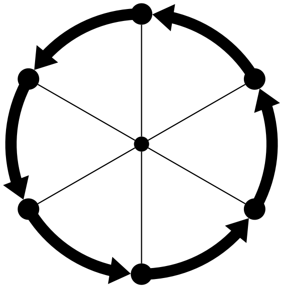

● Single-dwell cam index of 6 divisions

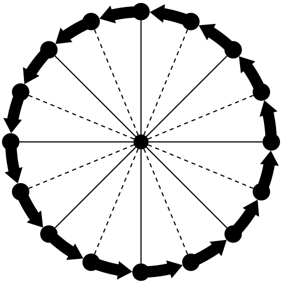

● 2 dwell cam index of 16 divisions

General application of index drive is the drive source for intermittent table, intermittent conveyor and roller used for unidirectional indexing.

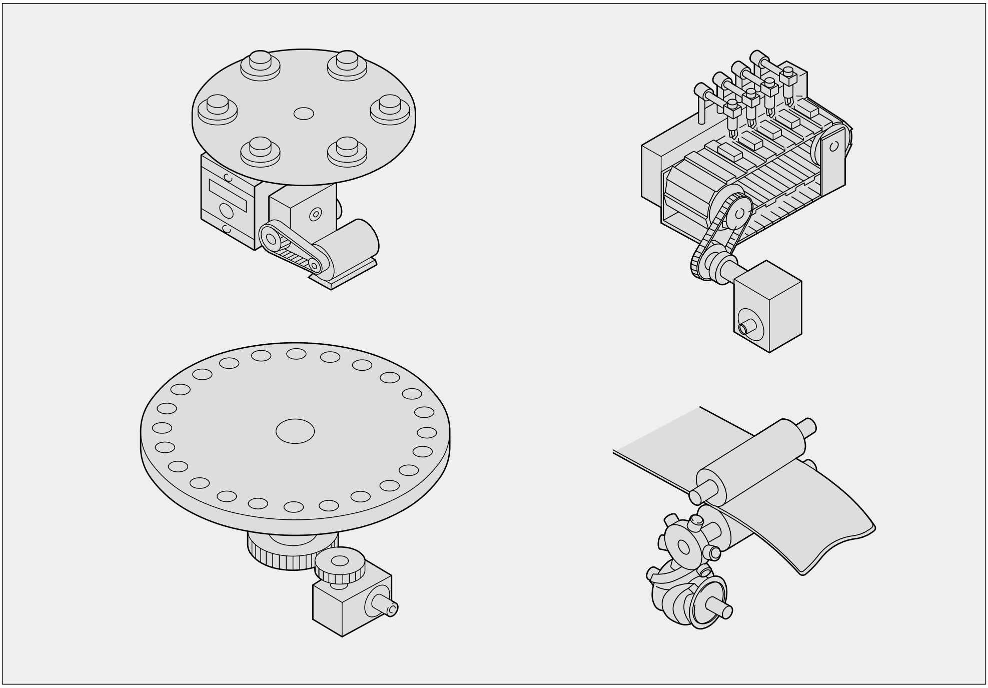

Basic Operation of the Index Drives

● Special index drive / Oscillator

Special index drive

(1) Unequal division index

Normally, the index angle of the output shaft is equally divided, but depending on the design conditions, an unequal division index can be manufactured.

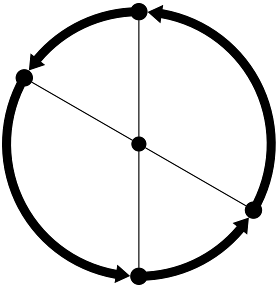

(2) Irregularly divided index drive

Normally, the output shaft stops at the same spot for every turn repeatedly. However, when you create an index which turns by 80 degrees (4.5 divisions), the output shaft stops at the same spot not at every turn but every other turn. This can be used as the drive source of a reduction mechanism with gears.

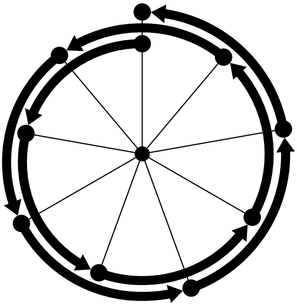

(3) Return motion index

In some cases, you may want to move a workpiece to a certain direction with another unit after it is conveyed to the specified position with an intermittent conveyor. In this case, you have to release the workpiece from the jig pressure. We can create a cam which moves back slightly after moving to a specified position, i.e., a cam that is a combination of index and oscillator, which we'll explain below.

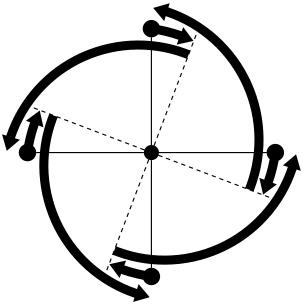

Oscillator

While the index gives a sequence of motions in 1 direction, the oscillator rotates the output shaft by the specified angle and stops. Then, it goes back to the original position with the input shaft continuously rotating at a constant speed. Within 1 full 360 degree rotation of the input shaft, it sets up the dwell angle, the index angle (forward), the dwell angle and the index angle (return). Compared with the index of the same size whose output shaft turns only in 1 direction, the oscillating angle of the output shaft and the index angle of the input shaft may be restricted, which requires consideration on timing.

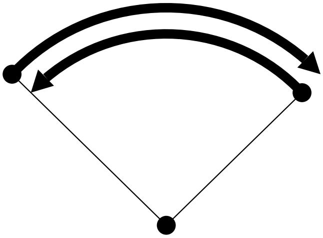

● Timing chart

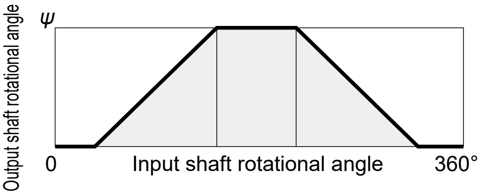

This can be used for the drive source of the reciprocating motion of a slider, swing arm, pick-and-place, and gripper feed.

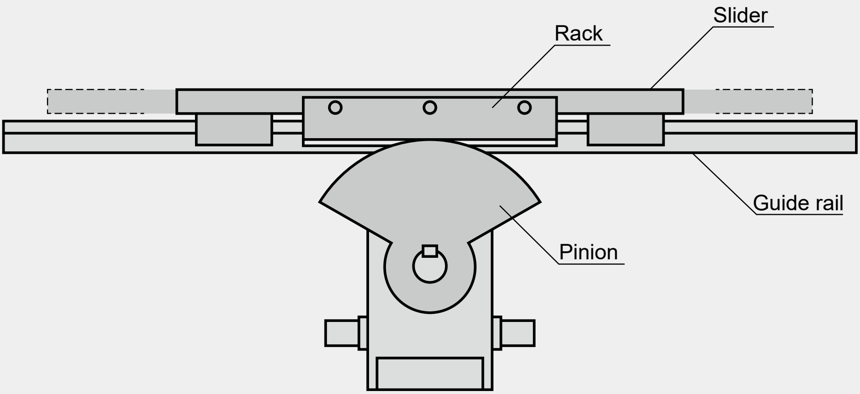

Basic Operation of the Index Drives

● Special oscillator / Reducer / Special reducer

Special oscillator

(1) Oscillator with different reciprocating times

Normally for the oscillator series, the index angle and the dwell angle are the same for either direction. Yet, it is possible to change the dwell time at the end of the oscillator or the movement time for 1 of the reciprocating motions with the input shaft continuously rotating at a constant speed. This means, you can freely set up the ratio of index angle and dwell angle within 360 degrees of the input shaft.

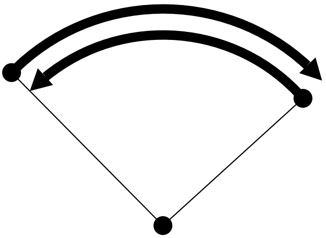

● Timing chart

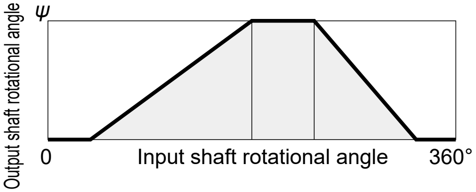

(2) Oscillator with 3 or more stop positions

When work is done at the end of the oscillator, there are some cases in which an arm or jig on the output shaft may interfere with another drive when it comes to the end of the oscillator. If this happens, you should set up a standby point in addition to the end of the oscillator. That is, a compact dwell angle on the input shaft side should be set up and the drive within that angle stopped until the work is completed. This solution may become critical to set up the standby point for the machine configuration when stopping a cycle, work supply (input) is stopped or when movement is halted at the specified stopping point.

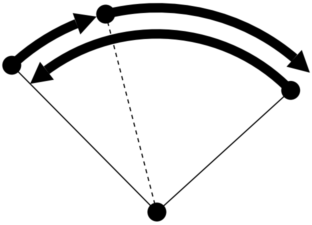

● Timing chart

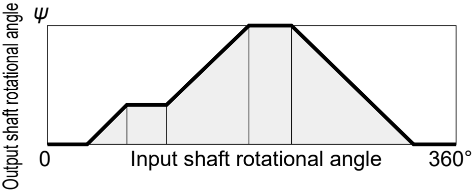

To manufacture these special oscillators, you should determine the specifications including the rotational direction of the input/output shaft, the relationship between the output shaft keyway and the tap hole, and set up the timing chart.

Reducer

Instead of this solution, in which the dwell angle is set up so that the index stops at a specified point, you can obtain a reduction mechanism of the reduction ratio corresponding to the index number if a constant velocity curve is employed as the cam curve with the dwell angle selected to be zero.

This reducer cam:

(1) Has compact backlash,

(2) Changes less over time due to wear and it has higher reduction efficiency because of the rolling contact mechanism, which is beneficial in various applications.

● Timing chart

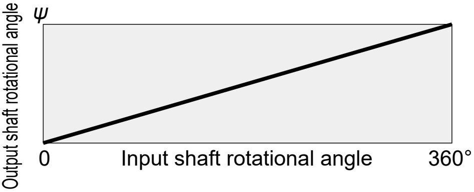

▪ Applications

· Servo motor reducer

· By combining with an index, multiple indexing can be achieved.

· Precision transmission element between 2 shafts in place of gears.

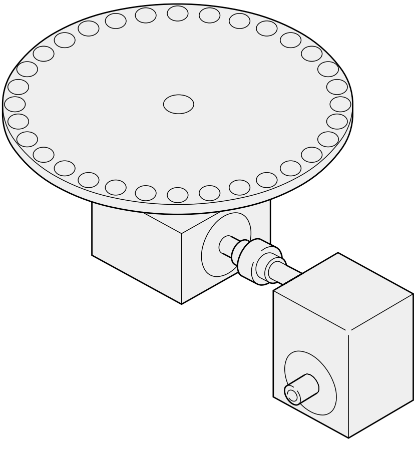

Special reducer (surf motion)

A common reducer is a constant speed reduction mechanism, but as a special case, it is possible to cyclically fluctuate the output shaft speed even though the input shaft turns at a constant speed. For instance, with the 1:1 reducer, the output shaft turns 1 full turn at a constant speed when the input shaft turns 1 full turn at a constant speed. For the special reducer, which is called "surf motion," you can freely set up an acceleration range and a deceleration range in addition to a constant speed range within 1 turn of the input shaft.

This is similar to the non-circular gear, but the reducer cam is superior because the design flexibility is much higher and the backlash is smaller. In other words, this is a speed conversion unit without vibration and having excellent motion characteristics with a cam curve.

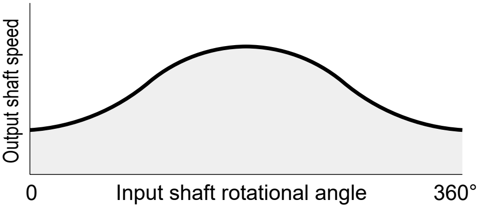

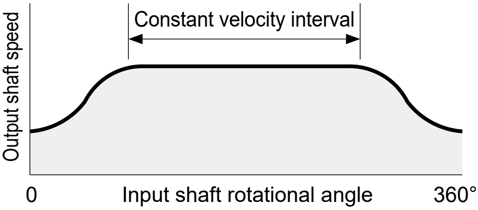

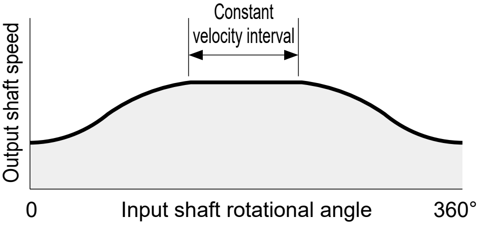

Features and Applications of the Index Drives

● Introduction

Roller gear cam

This employs a drum-shaped cam called "concave globoidal cam" with the input shaft and the output shaft crossing at a right angle. The cam followers are arranged radially on the turret on the output shaft, and they are driven while the tapered ribs on the cam attached to the input shaft apply preload. Hence, no backlash exists between the cam and the cam followers, and this is considered to be one of the most reliable cam mechanisms.

● Main features

(1) Index number of 2 to 16 (single-dwell cam)

The cam followers of the roller gear cam drive are arranged radially on the turret on the output shaft. For a single-dwell cam, the common (standard) type has 6 to sixteen cam followers to achieve 2 to sixteen indexes. Since the cam followers are arranged on the turret, the size of the cam followers decreases compact when the index number increases. This may adversely affect the rigidity in some cases. For these cases, other than the issue of accuracy, you can choose a multi-dwell cam in place of a single-dwell cam to improve rigidity.

(2) Smooth indexing

Backlash between the cam and the cam followers is eliminated with preload from the eccentric mechanism of the input shaft. In addition, the cam curve with excellent motion characteristics is adopted as standard to achieve smooth indexing. (Refer to "Cam curve.")

(3) High output and rigidity

The cam and the cam followers that are precision ground and heat-treated constant contact against each other at multiple spots to provide excellent transmission efficiency. Compared to the parallel cam, since the pressure angle becomes zero at the dwell interval, residual vibration is less and positioning with high rigidity can be achieved.

(4) High speed operation

Preload always exists between the cam and the cam followers that are precision machined, eliminating backlash, and the cam curve with excellent motion characteristics allows high speed operation. Depending on the load conditions, the input shaft can be turned at 1,000 rpm or faster. This type of unit is employed for the feed unit (roller feed and gripper feed) for press materials, for which high speed indexing is a must. We are ready to provide you with separate data so that the optimum model can be selected depending on expected service life, load and operating conditions.

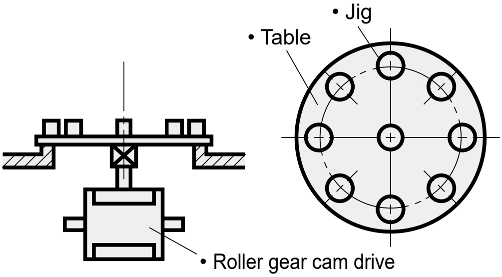

● Applications

- Driving source of index tables with large inertia.
- Intermittent conveyor
- Roller feed and gripper feed (press material feed)
- Oscillator and reciprocating linear motion using the oscillation cam
- Smooth transfer positioning using the cam curve (filling machine and packaging machine)

Parallel cam

The parallel cam is a type of conjugate cam. Both the input shaft and the output axis are parallel in the drive. Two plate cams are arranged on the input shaft. The cam followers are alternately placed on either side of the turret, which is a 1-piece construction with the output shaft. One of the parallel cams pushes up the cam follower in the rising process while the other cam turns the output shaft with the cam follower in the falling process to reach a dwell interval, and this motion is repeated.

In the same manner as the roller gear cam, the eccentric mechanism of the input shaft generates preload between the cam and the cam follower during operation. Hence, backlash does not exist, and motion characteristics of the continuous cam curve are achieved. For a mechanical reason, the parallel cam system will go into a restraining condition with the pressure angle slightly higher because there are 2 cams, while the pressure angle at the dwell interval for the roller gear cam system is zero. Hence, residual vibration tends to occur due to the rigidity of the driving system if the load has significant moment of inertia. This system is considered to be more suitable for the conveyer drive, whose frictional load is relatively greater compared with the table drive, whose moment of inertia is significant.

● Main features

(1) Parallel input and output axes

Since the input and output axes are arranged in parallel, the driving system configuration can be different from that of the roller gear cam system (crossing at the right angle). For the parallel cam system, it is easy to intermittently drive the output shaft parallel to the drive shaft (counter shaft). Combinations of rotating directions of the input and the output shafts are the same as those for a spur gear system or Geneva drive.

(2) 1 to 4 division index number

From the practical perspective, the parallel cam system is most suitable for a compact index number such as 1, 2, 3, or 4. Since a compact index angle is effectively employed compared to the roller gear cam system, these systems are helpful to add flexibility in terms of timing to the machine design as the supplementary unit for the roller gear cam system. For the 1 to 4 division index number, a single-dwell cam, which has 1 index angle and single dwell angle, is used. On the contrary, for the index number of 6 to 8, a 2 dwell cam, which has 2 of each in symmetrical layout for 1 rotation of the input shaft, is used.

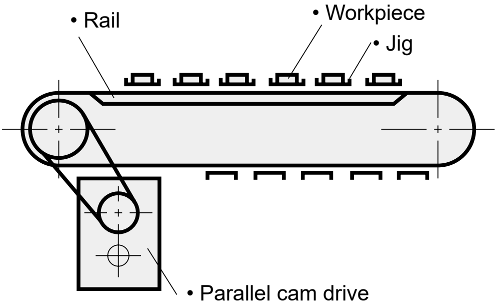

● Applications

- Intermittent conveyor
- Intermittent drive source using parallel shaft
- Roller feed
- Oscillator and reciprocating linear motion using the oscillation cam
- Smooth transfer positioning using the cam curve (filling machine and packaging machine)

Features and Applications of the Index Drives

● Roller gear cam

Compact

● RGIS 025/032
● RGOS 025/032

These 2 compact models are suitable for compact equipment. These types are most suitable to provide the drive source for indexing compact precision parts and transporting operation.

1. High speed rotation

As miniature cam followers with needle bearing are used, this achieves smooth and high speed driving.

2. Two miniature models

Two miniature models with the shaft interval of 25 mm and 23 mm are offered.

3. Large flexibility of index angle

Compared to the standard, this type is easier to synchronize with other devices since a wide index angle is permitted for a wide angle swivel.

4. Lightweight and clean environment compatible

The housing is made of aluminum, and grease is used for lubrication. This type is capable to be used in a clean environment as no other lubrication is required.

5. Option

A miniature worm reducer, geared motor and torque saver can be installed.

Standard

- ● RGIS 040 to 250
- ● RGOS 040 to 250
- ● RGCS 040 to 250

This type is widely used for general purposes. You can select either the flange shaft or the straight shaft depending on the connection of the application such as the table, the sprocket, the gear and the shaft.

1. Wider variations in size

Covering the shaft interval of 40 to 250 mm with the standard products, these can be used in a wide range of applications from transporting compact parts such as electronic parts and ICs to large parts for automotive industry.

2. High output

The cams and the cam followers are precision-ground and heat-treated so that they are capable of handling high power relative to their housing size.

3. Mounting face

The housing has mounting holes machined on all 6 faces as standard.

4. Aluminum light weight available

For those with the shaft interval of 40, 50, 63 and 80 mm, aluminum housing is available. This helps keep the drive system light.

5. High speed rotation

The cam, the cam follower and the turret are all precision machined to achieve optimum balance. Among the index drive series, this type is most suitable for high speed operation.

6. Options

Various options including a torque saver, the reducer, the clutch/brake and the motor are available, reducing the steps in designing and assembling the drive system.

Features and Applications of the Index Drives

● Roller gear cam

Table type

● RGIT 063 to 250

● RGCT 063 to 250

This type features a hollow fixed shaft inside the rotating output shaft (flange). Piping, wiring and/or a drive shaft can be put to the hollow shaft.

1. Making the unit compact

The entire system can be designed to be compact as an attachment can be mounted inside the rotating table.

2. Index number of 4 to 24 (single-dwell cam)

Compared to the standard, the turret diameter of the output shaft is large allowing a larger index number.

3. High rigidity and high precision

The table mounting face is large and the rotating flatness accuracy is high, which makes this suitable for table drive.

4. Wider variations in size

Eight models with the shaft interval of 63 to 250 mm are available as standard. You can choose the optimum size depending on the load.

5. Installation position

The position #1 is the standard installation. Those with the shaft interval of 63 to 110 mm may be installed differently if requested.

6. Options

Various options including a torque saver, reducer, clutch/brake and motor are available.

Wide angle

● RGIL 063 to 250

● RGOL 063 to 250

Compared to the standard roller gear cam drive, the cam diameter is designed to be large. For instance, for the case of wide angle indexing such as when the index number is 2, the index angle required for the standard is 270 degrees while it is just 120 degrees for the wide angle. Hence, the restrictions on timing for the continuous operation are reduced, and by directly driving the unit without any mechanism to increase speed such as gears and pulleys, accurate transport positioning becomes possible.

1. Wide angle indexing

As the index angle can be made compact for wide angle indexing and oscillator, the dwell time can be longer in the cycle time.
When the oscillator cam is employed, the dwell time at the end of oscillator can be made quite long, which is most convenient for continuous operation.

2. Wider variations in size

Six models with a shaft interval of 63 to 250 mm are available as standard.

3. Mounting face

The housing has mounting holes machined on all 6 faces as standard.

4. Options

Various options including a torque saver, the reducer, the clutch/brake and motor are available.

Basic

● RGIB 250

1. Basic is added to index drive series

Inheriting the advantages of our table type RGIT series (with a fixed hollow shaft), the cost performance is improved with a new design while maintaining its basic performance.

2. Space saving

Coupled with the thin design of the index drive and the compact hollow shaft geared motor, the entire system became shorter and with a smaller footprint.

3. Integrated design of the driving system

Providing optional integrated design of the driving system with the geared motor, the customer's tasks of designing, procuring, assembling and adjusting are eliminated.

4. Maintenance free

Clutch/Brake are eliminated due to the inverter control. This is a true maintenance free system.

Features and Applications of the Index Drives

● Parallel cam

Parallel cam drive

● PCIS 040 to 250
● PCOS 040 to 250

As the input and output shafts are arranged in parallel, the driving system impossible with a roller gear cam drive or a barrel cam drive is possible. This drive is suitable for a relatively compact index number such as 1, 2, 3, or 4. This is most suitable for long pitch feed drive of a conveyor or a roller feed.
By adding an oscillator cam to the index cam, the automatic drive can be enhanced without plate cams and levers which require time consuming design stages.

1. 1 to 4 division index number

The index angle required for wide angle index such as 1, 2, 3, or 4 indexes, can be compact compared to the roller gear cam drive (standard).

2. Oscillator

The oscillator cam with the oscillating angle of up to 45 degrees can be manufactured.

3. Mounting face

The housing has mounting holes machined on all 6 faces as standard.
Any of the 6 installation orientations is possible.

4. Wider variations in size

9 models with the shaft interval of 40 to 250 mm are available as standard.
You can choose the optimum size depending on the load.

5. Repeatability

The cam followers on the output side continuously receive sufficient preload resulting in no backlash between the cam and the cam followers. This system achieves high repeatability and smooth operation.

6. Options

Various options including a torque saver, the reducer, the clutch/brake and the motor are available. This helps reduce the steps in designing and assembling the drive system.

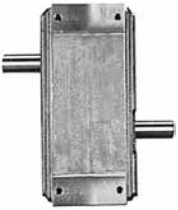

Options

In order to make most of the features of the index drive, the functionality of the peripheral devices are critical.

CKD provides various options including reducers, clutches/brakes, torque saver and torque guard so that customers can make the most of index drive′s performance.

CAUTION

To mount optional components, the exterior specification of the index drive may be changed. When you add or change an option due to maintenance or specification change, be sure to check the specifications of the index drive.

Worm reducer

- ● CRG 25/32
- ● HO 32 to 135
- ● TE 35 to 150

This is a dedicated reducer for the index drive. By mounting this directly on the housing, you will get a compact drive system.

To make most of the distinctive features of the index drive, it is extremely important to eliminate factors which cause deflection and backlash not only from the reducer of the drive system but also from various connections and linkages as much as possible.

The dedicated reducer solves this problem by connecting directly to the index drive.

For the worm reducer, you can choose 1 either with clutch/brake or without from HO32 to 135 or a high-torque version from TE35 to 150.

CRG25/32 are also available as the dedicated compact reducers for RGIS025/032.

These reducers are capable of ensuring maximum performance of the index drive. This helps reduce the steps in designing and assembling the drive system.

HO Series

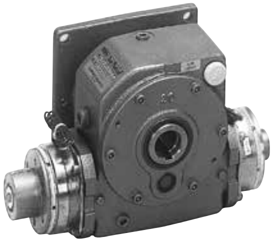

TE Series

Overload protection unit for the output shaft

● Torque saver TSF 2 to 18

This dedicated safety unit protects index drive from overload by being mounted on its output shaft.

● Torque saver for the table TST 6 to 11

This is a dedicated safety unit to be mounted on the output shaft of the table type index drive to protect it from overload.

● Torque saver for coupling TGX 20 to 70

This is a dedicated safety unit with a coupling function that absorbs misalignment caused by errors in angularity, parallelism and axial deflection, protecting the index drive from overload.

1. Accurate release

This works accurately with less variation in the set torque.

2. Small backlash

To maximize the index accuracy of the index drive, backlash is minimized, and the journal has high rigidity in both radial and thrust directions.

3. One-point setting

Not only the positioning accuracy but also the synchronized characteristics with other devices may become an issue on the output shaft of the index drive. This torque saver has the function to restore at a single point for each rotation of the output shaft. The restore accuracy after release can be maintained for an extended period of time.

4. Overload detection

By combining this with a proximity switch, when a torque saver is released due to overload, the detection signal to stop the driving and other devices can be taken out.

5. Release torque adjustment

The release torque is infinitely adjustable. The construction is uniquely designed to maintain the set torque for an extended period of time. This is mounted on the output shaft of the index drive with a tapered ring at our factory. There is no need to prepare connectors or to make installation adjustment. This helps you keep the accuracy of the unit (with the straight output shaft) to extend its service life. (TST is fixed with bolts)

TSF Series

TST Series

TGX Series

Options

With a geared motor

This transmits power of a standard compact geared motor to index drive to gears and belt. This can be used as drive source for compact index drive (RGIS 025, 032, 040, 050, 063). Its compactness allows space-saving design of the system.
For some of these, the driving method can be chosen from 3 types: gear drive, longitudinal belt drive and lateral belt drive. You can choose any of the "induction," "reversible," "brake-equipped," and "clutch/brake-equipped," motors.

RGIS/RGIT series driving system option Hollow shaft geared motor

1. Environmentally Friendly

By eliminating clutch/brake and adopting an inverter for starting/stopping, consumable parts are eliminated. Power consumption is reduced with the improved efficiency of the motor reducer mechanism.

2. Maintenance free

With an inverter adopted for starting/stopping, servicing the clutch/brake parts becomes unnecessary.

3. Low cost

The hollow shaft geared motor with excellent cost performance achieves low cost.

4. Mechatronics design

We propose a unit with integrated drive system compatible with DD motor.

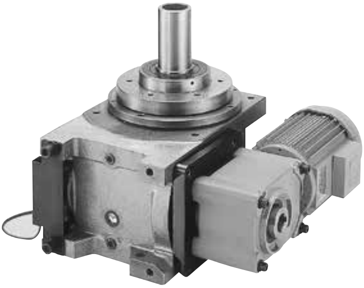

Index Drives and Peripheral Devices

Example of a drive system

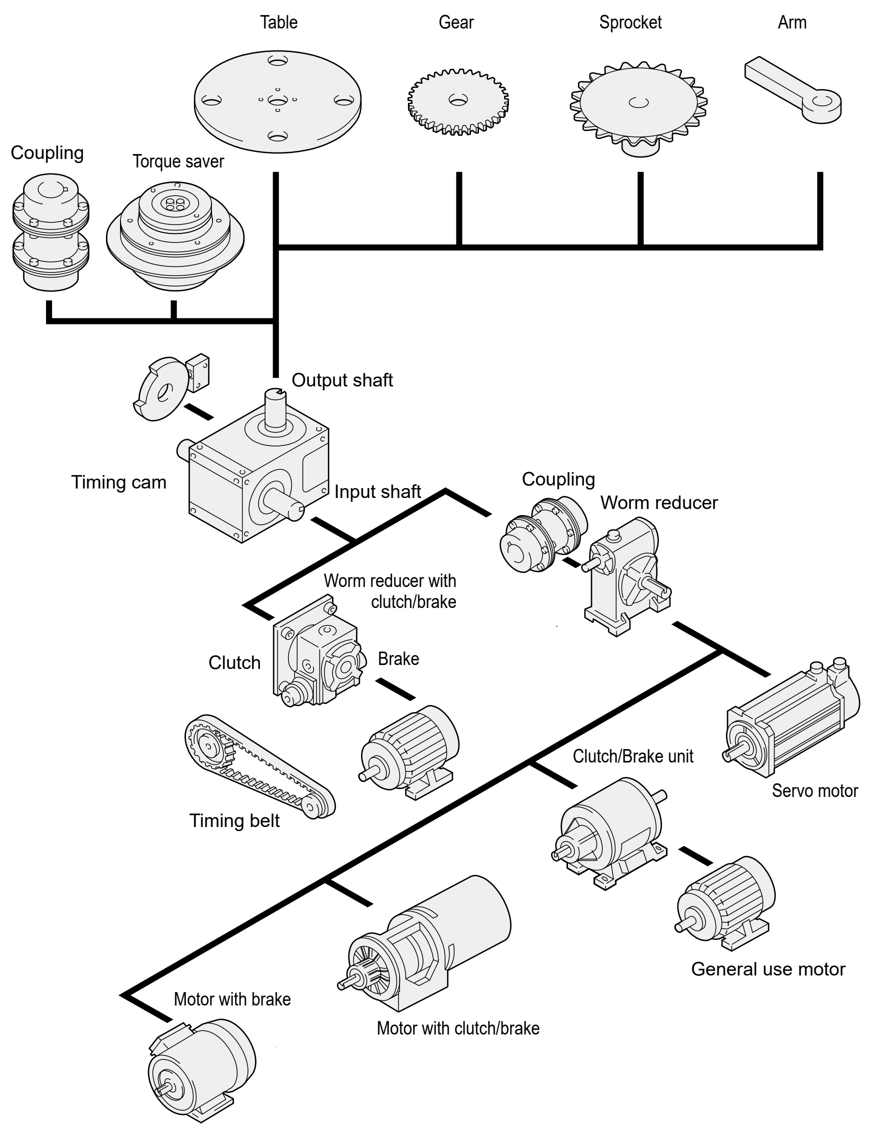

● Index drive output side

Overload protection unit (torque saver)

For an overload protection unit of the index drive, choose the 1 with min. backlash.
Note also that it should be able to go back to the original position accurately after release. We recommend using our torque saver.

Coupling

Choose the one with min. backlash and high torsional rigidity. You should also remember that the moment of inertia should be compact considering the load of the index drive.

Table

● Fasten the table, flange, arm, etc. in the manner which has no backlash. It is very effective if you could use set bolts, clamping slots, tapered rings, etc., in combination.
● We recommend employing positioning pins in case you remove the table for maintenance.
● Excessive torque may apply while the table or jig is being installed. The allowable rated static output torque of the index drive should be checked to prevent any overload.

Gear

High rigidity mounting is critical just like the table. Backlash between gears and positioning accuracy may affect the service life of the system. Unless the gear system is not hindered, minimize backlash as much as possible. The system is superior in terms of torque and accuracy when the driven speed of the index drive is reduced.
We recommend a design where the output drive system and the index drive models are taken into consideration.

Sprocket

Minimize backlash employing a rigid chain tensioner or sprocket center adjusting mechanism which have no cushioning function. Due to the polygonal motion of the chain link, the cam curve may be disturbed.
To minimize this, you should choose a sprocket with a large number of teeth or of a compact chain pitch as long as this does not have an adverse effect on transmission capacity.

Index Drives and Peripheral Devices

● Index drive input side

Coupling

The index drive ensures the motion characteristics defined by the cam curve only when the input shaft turns at a constant speed. If a fluctuation in rotation occurs due to the coupling, the continuous curve of the cam curve may be disturbed. Choose the one with min. backlash and high rigidity for a coupling whose output shaft rotates at a constant speed.

Chain

In the same manner as the output shaft, take measures to minimize backlash. Reversed load is applied to the input shaft of index drive periodically. If the rotation fluctuates due to backlash, overload may occur to the index drive. It is very important to eliminate any factors which may cause uneven rotation because of backlash and chain link to maximize the characteristics of the cam curve.

Timing belt

Generally, a timing belt is used between the reducer and the motor. Minimize pulsation with optimum tension. When a timing belt is used between the input shaft of index drive and the reducer, the following should be checked:

- Is the tension correct?
- Are the rigidity and transmission capacity sufficient?
- Is servicing possible if it gets broken?

The timing belt has the following advantages compared to the chain:

- Less rotational fluctuation as links are not used.
- Min. backlash.
- Min. stretching by long-term use.
- Oilless.

Hence, a timing belt is suitable for driving a relatively compact index drive.

Reducer

We recommend a worm reducer for driving index drives. Since the output shaft of index drive repeats the turning and stopping frequently, the input shaft receives periodic load in the forward and reverse directions. Hence, the greater the backlash of the reducer, the greater the rotation fluctuation, which generates acceleration greater than the theoretical acceleration defined by the cam curve on the output shaft. The inertia load of the output side is represented with:

Moment of inertia x angular acceleration

Hence, the greater the angular acceleration, the greater the moment of inertia. This increases load fluctuation on the input side and increases backlash in the transmission mechanism leading to a vicious circle. Thus, the following features are required of a reducer:

- Min. backlash
- Self-locking feature
- High rigidity
- Simple connection eliminating backlash factors such as coupling, gear and belt, as much as possible

To satisfy the above requirements, we recommend a worm reducer to drive index drive. If a reducer other than a worm reducer is used, you should choose the size with extra capacity, considering acceleration fluctuation and overload due to rotational fluctuation.

Clutch/Brake

Generally, the clutch/brake is used to stop the input shaft of the index drive for every cycle of an intermittent operation. In this case, starting and stopping with clutch/brake should be conducted within the dwell angle of the input shaft of the index drive. Hence, the moment of inertia and the load which apply to the output shaft of the index drive can be ignored, and the clutch/brake directly connected to the worm shaft is most suitable. In addition, when the clutch/brake is attached to the motor, the moment of inertia of elements such as the timing belt and the pulleys should be taken into consideration. In addition, the frequency of starting and stopping (generally, this is assumed to be 15 times per minute or less), the expected service life and the ambient environment should be also taken into consideration.

Brake motor

The brake motor allows 5 stops per minute while the clutch/brake allows 15 stops per minute or less. However, depending on the model, this may vary. Please refer to the manufacturers' catalog.

Servo motor

If the stopping/starting frequency would exceed the limit for the clutch/brake or when you have to switch the rotational direction often, think about using a servo motor. You should take the reducer, the reduction ratio and the motor characteristics into consideration to choose an optimum model.

Motor

When you choose a general use motor, take the following into consideration.

- Index drive output load
- Frictional load inside the reducer
- Change in viscosity of the lubricating oil due to temperature change
- Efficiency of the reduction mechanism
- Backlash generated in the driving system
- Load from devices other than the index drive

Unless any special restriction exists, we recommend an electric motor. The speed of motors driven by fluids such as air or hydraulics are difficult to control, and it is thought that the environment may cause fluctuations on the load and speed.

Detection cam switch

When the index drive is to be stopped intermittently, the input shaft of the index drive should be accurately stopped within the dwell interval. If it is stopped within the indexing section, the positioning of the output shaft will not be accurate and excessive load will be applied to the cam and cam followers.

Usage example

● Assembling machine

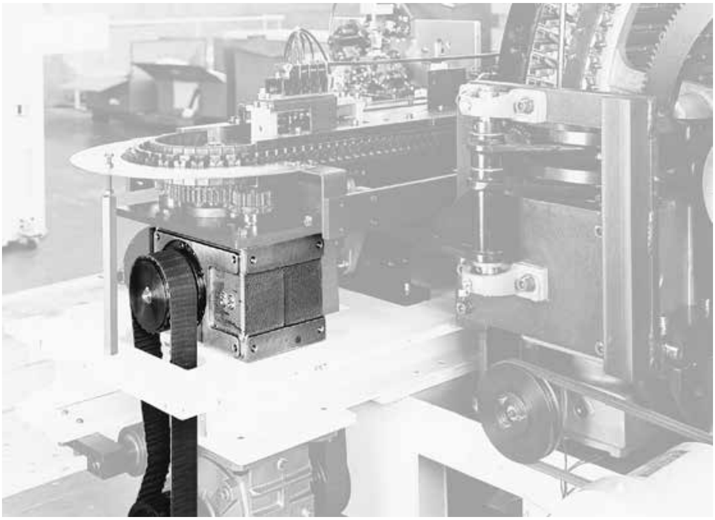

● Machine tool

● Packaging machine

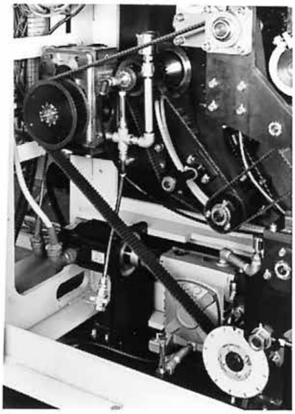

● Packaging machine

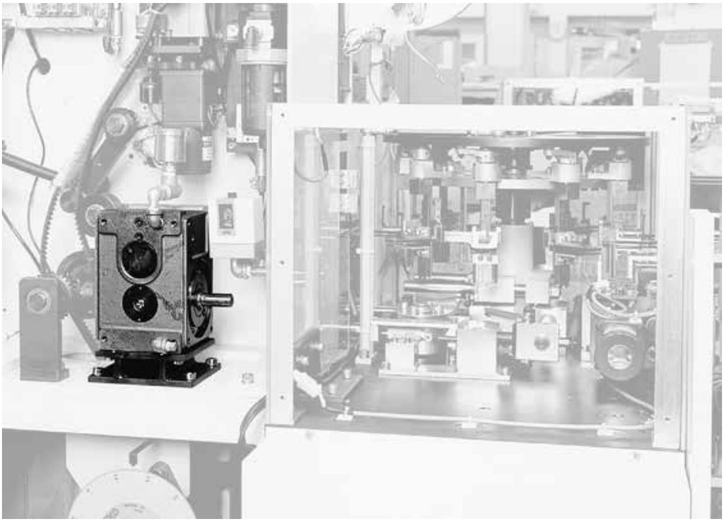

Guide to CKD's CAD data

How to use CKD's CAD data

CKD's CAD data is provided as follows for your use in CAD design.

2D CAD data

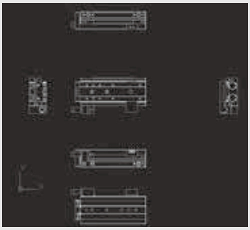

Types of compatible CAD
- · DXF
- · Dedicated CAD types

3D CAD data

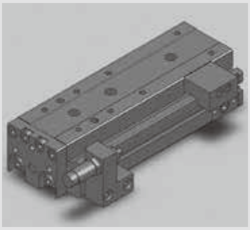

Types of compatible CAD
- · DXF
- · IGES
- · SAT
- · Palasolid
- · Dedicated CAD types

Homepage

Catalog PDFs and CAD data of CKD products are available for download.

https://www.ckd.co.jp/en/

For PDF and DXF data of the general catalogs

CKD Website Product/Support→ Component Products > **Materials: Download digital catalogs/catalog PDFs**

For PDF and DXF data of new products

CKD Website Product/Support→ Component Products > **Search for a product from the product list**

For 2D/3D CAD data

CKD Website Product/Support→ Component Products > **Materials: Download 2D CAD data/3D CAD data**

Guide to the model selection system

How to use the model selection system

Published on the website

This is a system for selecting products according to the customer's application and working conditions.

* Software may not be downloadable depending on your security policy.

Selection results are linked with catalog PDFs and CAD data!

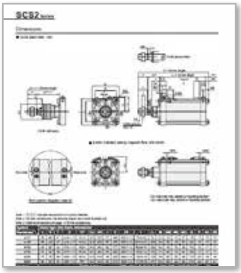

Registration not required - available at any time!

A variety of services such as CKD product catalogs, PDFs, CAD data, and model selection are available. Feel free to try them.

https://www.ckd.co.jp/en/

Important safety information

Be sure to read this section before starting use.

When designing and manufacturing a unit using CKD products, the manufacturer is obligated to ensure safety of the system operated by the mechanism with electrical control. It is important to select, use, handle and maintain the products appropriately to ensure that the CKD product is used safely. Observe warnings and precautions to ensure unit safety. Confirm that unit safety is ensured, and manufacture a safe unit.

⚠ WARNING

1 Use the products within their product specifications.

This product must be used within its stated specifications. Use with load or speed exceeding the specifications range may result in damage, operation faults, or inaccurate operation. It must not be modified or machined. This product is intended for use as a unit or part for general-purpose industrial machinery. It is not intended for use outdoors or for use under the following conditions or environment.
(Note that this product can be used when CKD is consulted prior to use and the customer consents to CKD product specifications. The customer must provide safety measures to avoid risks in the event of problems.)

❶ Use for special applications for which safety is required, including but not limited to nuclear energy, railways, aircrafts, marine vessels, vehicles, medicinal devices, devices or applications coming into contact with beverages or foodstuffs, amusement devices, emergency cutoff circuits, press machines, brake circuits, or safety devices or applications.
❷ Use for applications where life or property could be adversely affected and special safety measures are required.

2 Do not touch any moving parts while the unit is running.

This would lead to injury.

3 Do not stop the input shaft abruptly while the output section is operating.

❶ If the input shaft is stopped abruptly with an inverter, load torque exceeding the design value may apply causing the unit to be damaged resulting in the table to overrun, which causes serious injury or damage on the entire unit.
❷ If it should be stopped for emergency to ensure safety, think of a procedure to avoid abrupt stopping and select the unit of size that can withstand the load torque of an emergency stop.

4 Do not service or inspect the units while power is being supplied.

It may sudden run due to an error or control circuit failure resulting in injury.

5 Do not use this product in an environment where explosion or corrosion may occur.

⚠ CAUTION

1 The installation of the unit to the machinery should be conducted by a qualified person who has knowledge of machine assembly.

Incorrect installation may cause injury or damage of the unit.

2 Start/Stop the unit when it is in dwell intervals.

If the input shaft is started/stopped at a spot other than dwell section, load torque exceeding the design value applies resulting in damage.

3 When the input shaft is equipped with a position detection cam, check its position periodically for any misalignment.

If there is a misalignment due to a loosened screw, the unit may malfunction resulting in injury.

4 Do not use the products in the environment where water or oil may be splashed over the unit. (no condensation)

CKD products are not water-proof nor splash-proof. If water or oil is splashed, the unit may malfunction or get damaged. Provide countermeasures such as a cover if water or oil may be splashed.

5 Units are filled with lubricating oil. Oil may seep out of oil seal while being used. Conduct periodic inspection and provide countermeasures such as an oil drip pan if this may cause a product defect.

■ The precautions are ranked as "DANGER", "WARNING" and "CAUTION" in this section.

⚠ DANGER:	When a dangerous situation may occur if handling is mistaken leading to fatal or serious injuries, and when there is a high degree of emergency to a warning.
⚠ WARNING:	When a risk of death or serious injury is expected if the product is misused.
⚠ CAUTION:	When a risk of minor injury or property damage is expected if the product is misused.

Note that some items described as "CAUTION" may lead to serious results depending on the situation.
All these items are very important. Be sure to observe all of these.

Limited warranty and disclaimer

Terms and conditions of warranty
The warranty period and scope of warranty are defined as below.

❶ Term of warranty

The warranty period is 1 year from the first delivery to the customer. (The running time per day is assumed to be 8 hours or less.) When the product reaches its service life specified in the catalogs/specifications within 1 year, this shall be the period for warranty.

❷ Scope of warranty

In case any defect attributable to CKD is found during the warranty period defined above, CKD shall, at its own discretion, repair or replace the product in whole or in part with no charge.
This Limited Warranty will not apply to:
This limited warranty shall not apply to:
(1) Use contrary to conditions/environment specified in its product specifications,
(2) Abuse/misuse due to carelessness or incorrect management,
(3) Failure caused by factors other than the product,
(4) Use other than original design purposes,
(5) Modification and/or repair after delivery on the construction, performance, or specification which CKD does not approve and has no knowledge of.
(6) Failure which could have been avoided if the customer's system in which the product is installed is equipped with the industry standard functionality,
(7) Failure due to causes not foreseeable with the technology at the time of delivery,
(8) Failure attributable to external factors including but not limited to fire, earthquake, flood, lightning, other force majeure, pollution, salty or gaseous atmosphere, abnormal voltage, etc.
(9) Failure caused by the component supplied or specified by the customer.
(10) Failure due to wear or deterioration of the repair parts such as bearings and oil seals.
The service life of optional parts (switches and drive system parts) varies depending on the operation conditions, and they should be warrantied under the terms and conditions specified by the manufacturer.
The warranty covers the actually delivered product, and does not cover any damage resulting from losses induced by faults in the delivered product.

❸ Limited warranty for export

1) The product should be returned to our plant or the company/plant which CKD specifies for any warranty services. The cost of returning the product shall not be covered by the warranty.
2) The repaired product shall be delivered to the specified location in Japan in domestic packing specifications.

The terms and conditions of warranty define the fundamental conditions. The terms and conditions specified in the specification drawing or the specification sheet take precedence if they differ from the terms and conditions specified here.

❹ Compatibility confirmation

The customer is responsible for confirming the compatibility of CKD products with the customer's systems, machines and equipment.

Precautions for export

❶ Security trade control

The products in this catalog and their related technologies may require approval before export or provision.
To contribute to world peace and safety, there may be cases in which approval under the Foreign Exchange and Foreign Trade Control Law is required depending on the country to where the product or related technology is being exported or provided.
The scope of products and related technologies requiring approval are listed in the Export Trade Control Order Appendix Table 1 or Foreign Exchange Order Appendix Table.
The Export Trade Control Order Appendix Table 1 and Foreign Exchange Order Appendix Table contain the following 2 types of information:
- "List control," which is specified for each item from 1 to 15
- “Catchall controls,” that do not specify specifications by item, but restrict by application (Section 16).

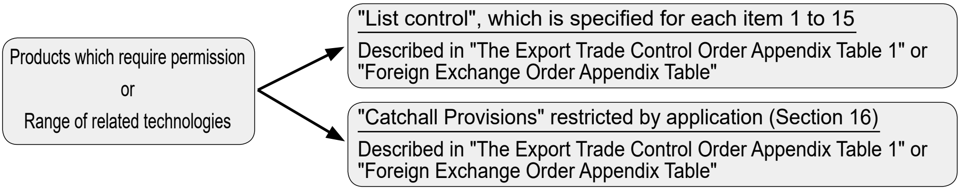

Products which require permission
or
Range of related technologies

"List control", which is specified for each item 1 to 15
Described in "The Export Trade Control Order Appendix Table 1" or "Foreign Exchange Order Appendix Table"

"Catchall Provisions" restricted by application (Section 16)
Described in "The Export Trade Control Order Appendix Table 1" or "Foreign Exchange Order Appendix Table"

An application for approval is
received by the Security Export Licensing Division of the Ministry of Economy, Trade and Industry or local bureaus of the Ministry of Economy, Trade and Industry.

❷ Products in this catalog and their related technologies

The products and related technologies in this catalog are subject to the catch-all control of the Foreign Exchange and Foreign Trade Control Law. When exporting or providing the products or related technologies in this catalog, ensure that they are not used for arms or weapons.

❸ Contact

Contact your local CKD Sales Office for information on the Security Trade Control of the products and related technologies in this catalog.

Important safety information

Be sure to read this section before starting use.

When designing or selecting

CAUTION

1 Selection

1) The load torque should be smaller than the dynamic rated output torque of index drive.
2) When you operate the input shaft at 200 rpm or faster, consult CKD as the installation adjustment procedure for high speed operation is required. (Special specifications)
3) Allowable max. diameter of the table
   The max. diameter of the table should be less than the allowable max. table diameter calculated when selecting index drive.
   Contact CKD if it exceeds this.
4) When you operate index drive intermittently using clutch/brake, check the motion time of the clutch/brake. The motion time of the clutch/brake varies depending on the characteristics of the clutch/brake itself and the rotation speed and moment of inertia of the shaft/pulley to be operated.
5) When you install a detection switch, check the response time of the detection switch.
   If the input shaft speed is fast, the detection switch may not be able to detect.
6) Index drive should be used in the ambient temperature of 0 to 40 degrees C. (no condensation)
   Also, mount a cover in dusty places or those exposed to water or oil drops, etc.
7) Note that optionally mountable parts have specifications, characteristic values, and durability set by their manufacturers; in some cases, depending on the usage environment, speed, or frequency, they may not be available for use or may have shortened service lives. Refer to each manufacturer's catalog for details.

Service life suggested by the manufacturers of optional components.

Options	Approximate service life	Manufacturer
Motor with brake or with C/B	2,000,000 operating cycles	Oriental Motors

2 Design of mounting and installation

1) When you design the mounting and installation of index drive, take into consideration that inspection, disassembly and assembly should be able to be easily conducted and the oil level gauge should be accessible.

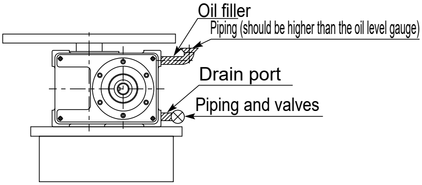

2) When you install index drive in an automated machine, replacing oil may become impossible.
   In this case, we recommend you should provide piping for draining and refilling oil before installation so that you can replace it easily.

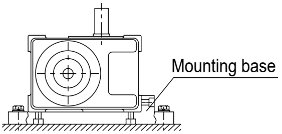

3) Index drive receives a large load. As in the right diagram, it should be securely fastened not only vertically but also horizontally to the base.

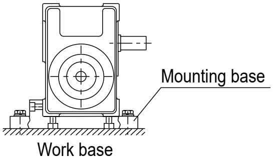

4) If the unit is stopped for emergency, be sure to turn the unit slowly by hand so that the output is in a dwell interval and then restart the system.
In case this procedure is needed, provide a manual handwheel in the driving system so that the input shaft can be turned manually.

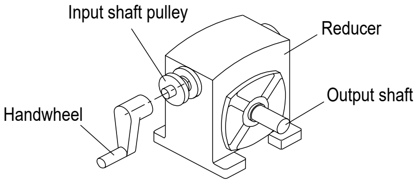

3 Designing the output shaft section

1) Allowable thrust force of the output shaft
Use the units within allowable thrust force. When the thrust force on the output shaft exceeds the allowable thrust force while the load torque is within the rated dynamic output torque of index drive, the rotating tables should be supported individually with thrust bearings or rollers.

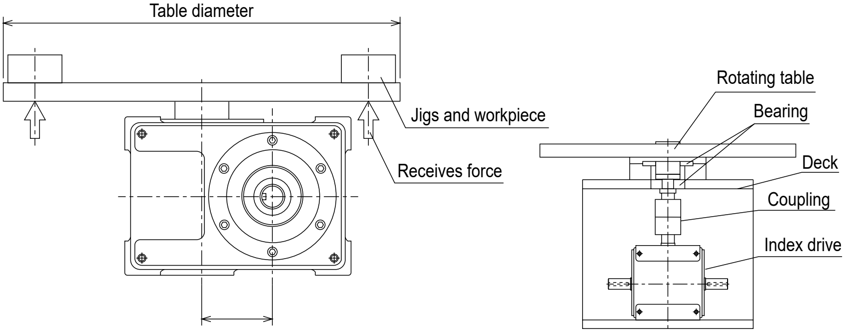

Shaft interval of index drive

2) Designing the rotating table jigs
   (1) In order to reduce the load applying to index drive, make the diameter of the rotation table, the pitch circle of the jig and the weight, as compact as possible.
   (2) The rotating table should be aligned not only with the bolts but with 2 positioning pins so that the alignment can be accurately reproduced after disassembly. (Flange)
   (3) When vertical load applies because of pressing, stamping, or caulking, never let the load apply directly to the rotating table or index drive. Be sure to provide a cradle or an alternative unit.

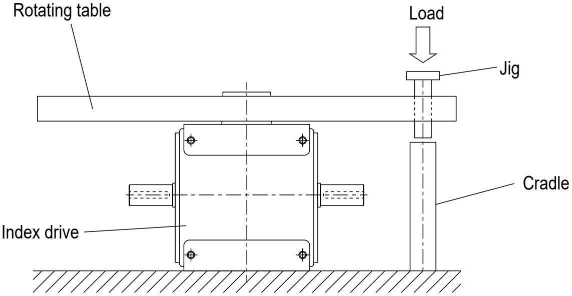

Cradle example

Safety precautions

Important safety information

Be sure to read this section before starting use.

When designing or selecting

⚠ CAUTION

4 Designing the input shaft section

1) Minimize backlash in the driving system from the motor to index drive, and give the driving system high rigidity.
   In general, the input shaft of index drive should be rotated at a constant speed. Backlash or uneven rotation of the driving system may cause vibration while the table is rotating, shorten the service life of the unit, and damage the components.

2) Avoid inserting an input shaft in series between the motor and the input shaft of index drive.

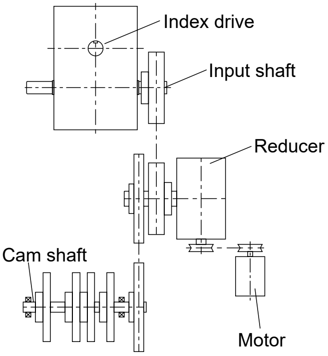

Good driving system example

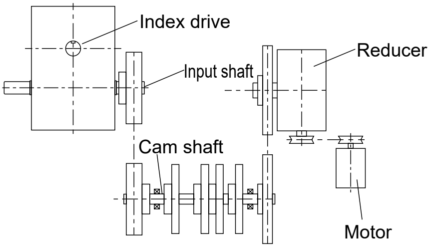

Sample arrangement which induces shocks

3) When you connect the input shaft of index drive directly to the output shaft of a reducer with a coupling, be sure to use a coupling which would not have backlash and which has a center adjusting mechanism.
   (We also provide index drive with an integrated reducer if the space allows.)

4) When stopping and starting frequency is 5 times per minute or less, a brake motor can handle this.
   When the frequency exceeds this, insert a clutch/brake or use a motor with clutch/brake.

5) When you use a timing belt or a chain, be sure to install a tensioner.
   Without a tensioner, the slack may cause shock or vibration.

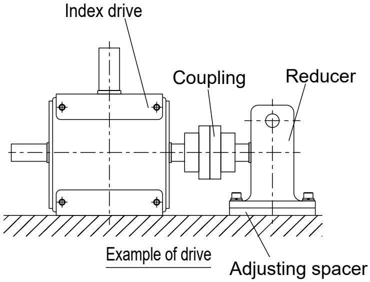

Example of drive

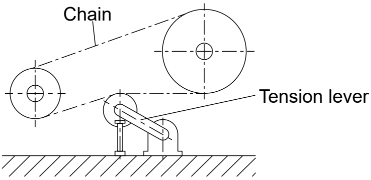

Tension lever example

6) When you use the input shaft for another attachment to synchronize, pay attention to the relationship between the keyway of the input shaft and the output shaft stop range.
(Refer to "Timing chart and keyway location" for the description of motion.)

When the keyway of the input shaft is within the index angle, the output shaft rotates; when it is in the dwell interval, the output shaft stops. (for single-dwell Index series)

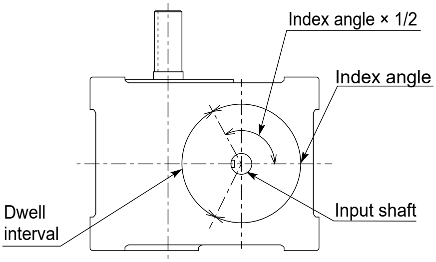

5 Designing the coupling of shafts

1) When you use a key to secure the shaft with a coupling, gear, sprocket, pulley, cam, or boss, shock or vibration occurs if the key is loose. We recommend the following key materials below in the table. You also should think of ensuring the fastening with split clamping or friction coupling in addition to the key.

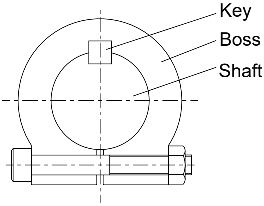

(Split)

Model			Recommended standards	
Roller gear cam	Compact	(RG□S)	Standard	(JIS B 1301-1996)
	Standard	(RG□S)	Type 1 key	(JIS B 1301-1959)
	Table type	(RG□T)	Type 1 key	(JIS B 1301-1959)
	Wide angle	(RG□L)	Standard	(JIS B 1301-1996)
	Basic	(RGIB)	Standard	(JIS B 1301-1996)
Parallel cam		(PC□S)	Standard	(JIS B 1301-1996)

2) When you connect shafts, align the centers of the shafts.
If not aligned, the shaft may get broken.

Important safety information

Be sure to read this section before starting use.

Installation & adjustment

⚠ CAUTION

1 Be sure to make index drive start and stop within a dwell interval.
(Refer to "Input shaft keyway position and index angle.")
Avoid emergency stopping, starting, or inching at an indexing section. Load which far exceeds the normal operational load would apply to index drive resulting in malfunction or deterioration of accuracy. If the unit is stopped for emergency, be sure to turn the unit slowly by hand so that the output is in a dwell interval and then restart the system. (Generally, index drive is driven to a worm reducer. Turn the input shaft of the reducer when you turn by hand.) When the rotation detection switch is installed on the input shaft, adjust the detection cam so that the input shaft stops within a dwell interval.

2 When you install a pulley, sprocket, or table to the input/output shaft, do not apply impact with a hammer. When impacted, index drive may be damaged or the accuracy may deteriorate.

3 Check for any loose connection or play in the input and output shaft connection.
If the connection is loose or play exists, the table does not turn smoothly resulting in shocks.

4 Install the unit in the position specified in the specifications.

5 Rotate the input shaft at speed specified in the specifications.

6 Index drive (excluding compact types) are shipped with lubricating oil filled. Make sure the oil level comes around the center of the oil level gauge. Before operation, replace the plug with the 1 with breather holes included in the shipment. If not replaced, oil leak may occur. When the internal pressure increases due to work speed or environment, oil may come out from the plug with breather holes. In this case, provide additional piping with an elbow so that oil does not spill over.

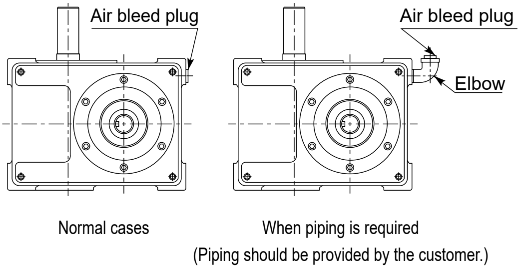

During use & maintenance

⚠ CAUTION

1. Inspect for any loosened bolts and screws.

2. If any abnormal noise comes out, immediately stop the machine. The index drive may be damaged internally. Contact your dealer of CKD.

3. Procedure of water-proofing and rust-proofing
   The input and output shafts and installation faces are not treated against rusting. Depending on the storage condition or atmosphere, rusting may occur. Apply anti-rust oil or grease or anti-rust paint on the machined surfaces.

4. Replacing lubricating oil
   Lubricating oil should be replaced after the initial 500 hours. After this, replace it at every 2,000 hour interval. Check the oil level every week. Refill as necessary. Be sure to use specified lubricating oil.

Type / Manufacturer	Lubricating oil		Grease
	Input shaft rotational speed less than 200 rpm	Input shaft rotational speed 200 rpm or more	
ENEOS (CKD standard products)	Bonnoc TS220	Gear Grand GL-5 80W-90	
Kyodo Yushi Co., Ltd. (CKD standard products)			Citrax EP No.2
ENEOS			Epnoc Grease AP2
Idemitsu Kosan CO., Ltd.	Daphne Super Gear oil 220	Apollo oil Wide Gear LW 80W-90	Daphne Eponex EP No.2
Showa Shell Sekiyu K.K.	Shell Omala Oil 220	Shell Gelco Power Gear 80W-90	Shell Alvania EP Grease R02
Exxon Mobil	Mobil Gear 600XP 220	Mobil Lube HD 80W-90	Mobilux EP2
Cosmo Oil Lubricants Co., Ltd.	Cosmo Gear SE220	Cosmo Gear GL-5 80W-90	Cosmo Grease Dynamax EP No.2

5. Service life of repair parts such as oil seals depends on the operational conditions, and it may not be satisfied in some cases.
   Regularly check any abnormal noise or oil leak in addition to checking the oil level.

● TECHNICAL INFORMATION

Technical Explanation B

● Explanation of operation

● Explanation of characteristics

● Explanation of accuracy

Explanation of operation

1. Name of parts and motion

Name of parts

● Roller gear cam mechanism

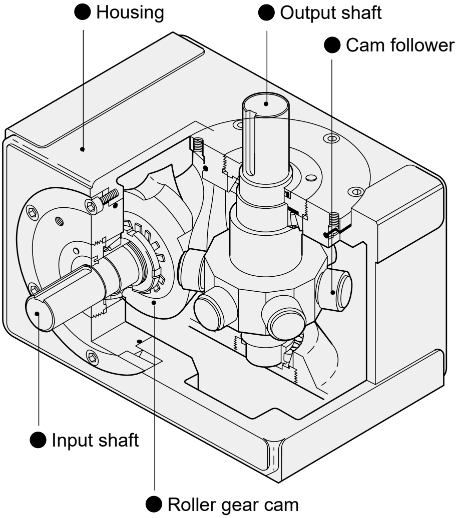

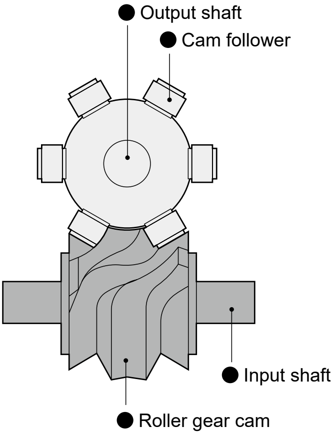

● Parallel cam mechanism

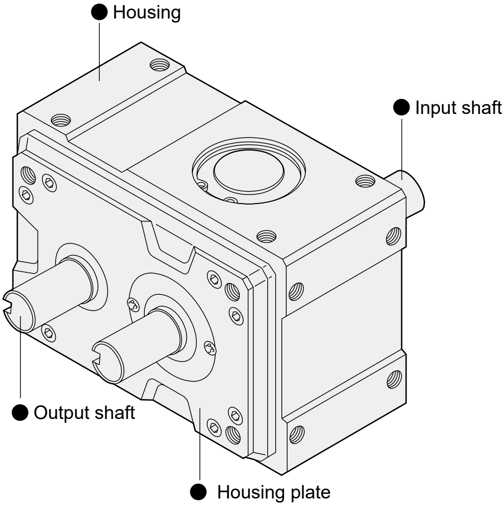

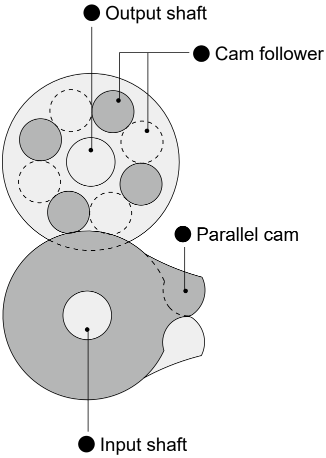

Motion

● Roller gear cam

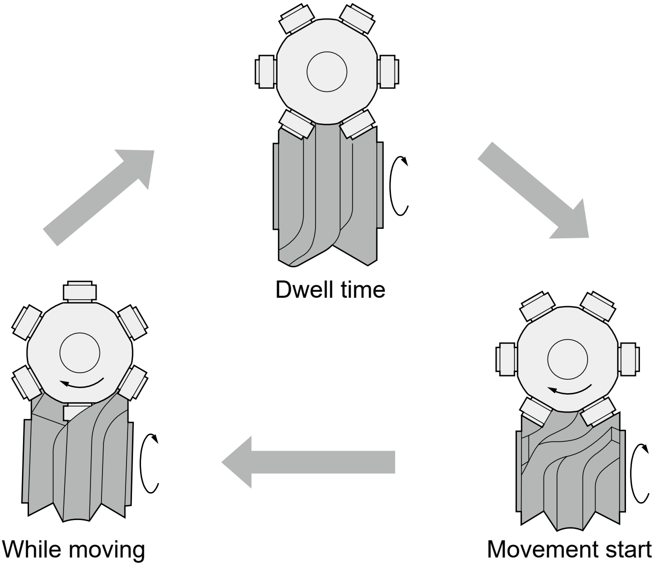

● Parallel cam

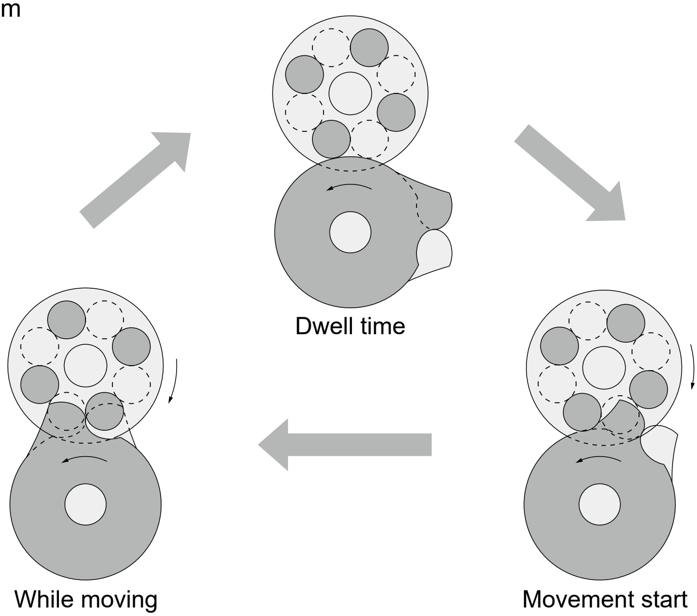

Explanation of operation

2. Index number and index angle

2-1. Index number (n)

The output shaft of index drive repeats the cycle of moving and stopping. How many times the output shaft stops for 1 full turn is called the "index number." For instance, when the output shaft stops at equal intervals 4 times for 1 full 360 turn, it turns by 90 degrees. This 90 degree angle is called the oscillating angle (ψ). The index number and the oscillating angle have the following relationship.

$$n= \frac{360}{\psi}$$

Since the output shaft of the Oscillator oscillates by a certain angle, the oscillating angle is used instead of the index number.

2-2. Index angle (θh)

The index angle represents the rotational angle of the input shaft required to move the output shaft for 1 index position.
The section of the index angle is called the index section, and the rest is called the dwell section.
In the dwell section, the output shaft stays stopped even if the input shaft rotates. You can choose the index angle freely within a certain range depending on the specifications. In this case, choose one generally based on 2 criteria depending on the operation of the input shaft.

(1) When the input shaft rotates continuously
The ratio of moving and stopping of the output shaft is equal to the ratio of the index angle and the dwell angle. For instance, when you choose the index angle to be 120 degrees, the dwell angle will be 240 degrees, and the ratio of moving and stopping will be 1:2.

(2) When the input shaft stops at every index position
Since the ratio of moving and stopping can be adjustable while the input shaft is stopped, a larger index angle among the standard values, such as 270 degrees and 300 degrees, is generally selected as this is more beneficial in terms of capacity.

t_0: Unit cycle time (s)
t_1: Index time (s)
z: Dwell No.

$$\theta h= \frac{360 \cdot t_1}{z \cdot t_0}$$

● Index angle of the roller gear cam

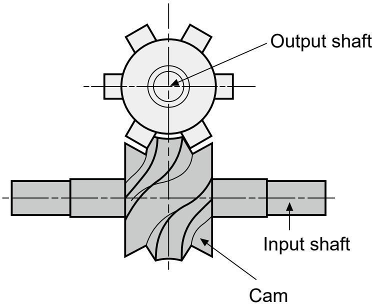

Cam development diagram

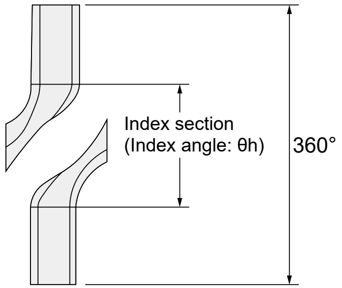

● Index angle of the parallel cam

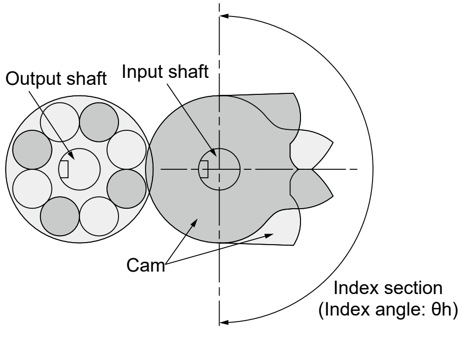

2-3. Dwell No. (z)

The dwell No. represents the number of indexing done by the output shaft for 1 full turn of the input shaft.

For instance, when a single indexing is done for 1 full turn of the input shaft, the dwell No. will be 1, and this is called a "1 dwell system.". The system with 2 or more dwell intervals is called the multi-dwell interval system.

For index drive, a single-dwell interval system is the standard, but a multi-dwell interval system is used for a greater index number.

(Note 1)

The 2 dwell interval system is the standard for Oscillators.

In some cases, systems have an identical index number but with different dwell interval numbers. In these cases, the greater the dwell interval number, the more beneficial in terms of capacity.

Model No.	RGIS		
Size	80	Material of housing:	FC
Index number	16	Shaft type	S shaft
Index angle:	120 degrees	Unit cycle time:	2 s
Cam curve	MS		

(N·m)

Dwell No.	Dynamic rated output torque
1	30.0(30rpm)
2	133.0(15rpm)

Table. Comparison of output torque for identical specifications

2-4. Total index angle (θt)

The total index angle is the total of index angles present within 1 full turn of the input shaft.

For a single-dwell interval system, the index angle and the total index angle are identical. In this catalog, the total index angle is used in the specifications for the model number and a torque table.

$$\theta t = \theta h \times z \text{ (for the standard specification)}$$

3. Cycle time

Unit cycle time (t_0)

Time required for 1 full cycle of the machine is called the cycle time.

All machines have a cycle time. The cycle time for the entire machinery is called the machine cycle time, while the cycle time for a unit composing the machine is called the unit cycle time. Henceforth, unless otherwise specified, "cycle time" refers to the unit cycle time.

When the input shaft of index drive is rotated continuously, the machine cycle time and the unit cycle time are identical. However, if the input shaft of index drive is stopped at every indexing, the machine cycle time and the unit cycle time are different. In this case, you should consider them separately.

When you select a size for index drive, the unit cycle time is used.

t_1: Index time (s)
t_2: Dwell time (s)
N: Input shaft rotational speed (rpm)
Suppose,

$$t_0=t_1+t_2=\frac{60}{N \times z}$$

and
tm: Machine cycle time (s)
ts: Input shaft stop time (s)
to be suppose,
the calculation will be:
tm = t_0+ts

Explanation of operation

4. Timing chart and keyway location

4-1. Timing chart

The chart which represents the movements of the output shaft of the index drive is called the timing chart.
This chart may not be important for the standard drive, but for an output shaft with special specifications making complicated movements, the timing chart is used to describe the motion.
The timing chart is drawn with the rotational angle (position) of the input shaft (Note 2) on the horizontal axis and the rotational angle (position) of the output shaft on the vertical axis to indicate the output shaft position relative to the input shaft position.
When you draw the chart, first plot the starting and ending points of the index section and then connect these with a straight line. (Note 3)

The line of the timing chart is drawn as below.

● Index section
Since both the input shaft and the output shaft move, the line will be either upward-sloping or downward-sloping. Whether it becomes upward-sloping or downward-sloping, it will correspond to the direction of the twist of the cam. Depending on how to choose the reference point, the direction of the twist cannot be determined for the upward-sloping line.

● Dwell section
Since the output shaft is stopped although the input shaft is rotating, the line becomes horizontal.

By default, the point of origin (the starting point of the input/output shaft, 0°position) for drawing the timing chart is the keyway location indicated in this catalog.
(For Oscillators, the output shaft is drawn at the middle of the movement for the purpose of convenience.) If you request a special movement of the index and specify its specifications with the timing chart, you can follow this convention.
In the case of special timing, if the input shaft rotation is reversed, you cannot obtain the expected movements. Hence, it is necessary to specify the rotational direction of the input/output shaft in the timing chart.

Note 2: To be precise, the horizontal axis represents time. Since the input shaft of the index drive rotates at a constant speed, the position of the input shaft and time are synonymous.

Note 3: The timing chart refers to the starting and ending points of the index section of the cam. Although the index section has a smooth curve, the line is represented with a straight line on the timing chart.

4-2. Standard Index

The standard index is located at the center of the cam dwell section when the input shaft keyway is at the "reference position." The output shaft is moved by the set angle referring to the "stop position" as the input shaft rotates.
The relationship between the standard timing chart and the input shaft keyway position is shown below with index angles. Refer to this when designing a system.

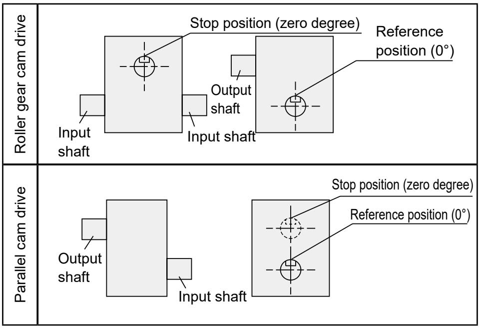

● Input shaft keyway position and index angle (θh)

1 dwell

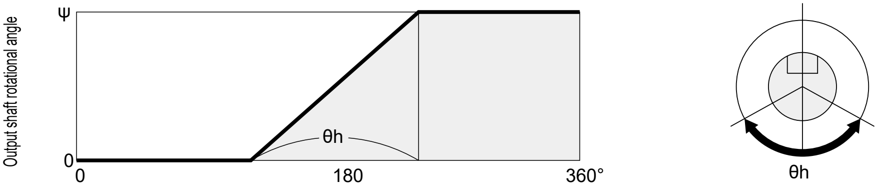

2 dwell

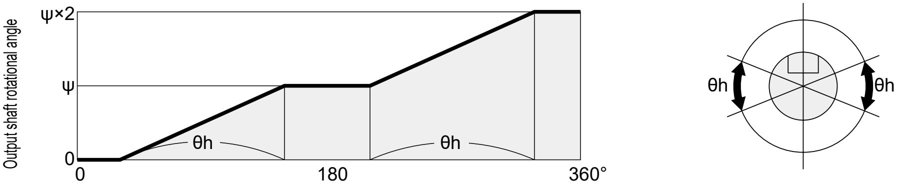

3 dwell

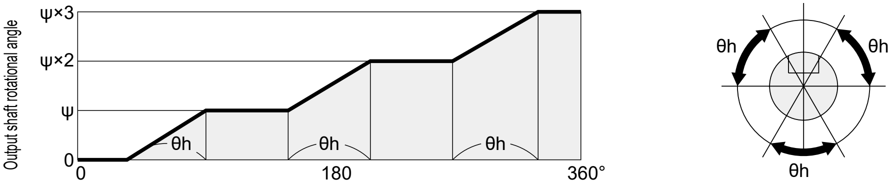

4 dwell

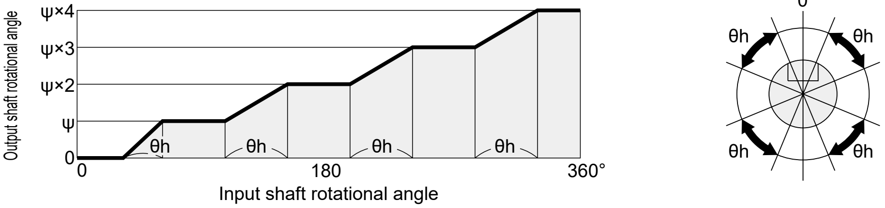

Explanation of operation

4. Timing chart and keyway location

4-3. Standard oscillator

The standard oscillator is located at the center of either of the 2 cam dwell sections when the input shaft keyway is at the "reference position."
At this time, the output shaft stops at the "oscillator reference position." The oscillator is conducted by the set angle from this spot as the input shaft rotates.

Note 1: In the outline dimensional diagram of the Product specifications D, the output shaft keyway is drawn at the center of the oscillating angle.
For the input/output shaft, the reference point in the right figure and the oscillator reference point are taken to be the reference (zero degrees). Refer to this when designing a system.

Note 2: When the output shaft is the flange, the mounting hole locations on the flange face will have the same positional relationship as the keyway.

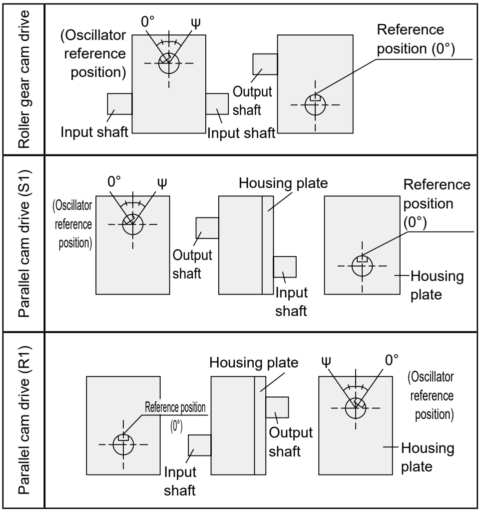

● Input shaft keyway position and index angle (θh)

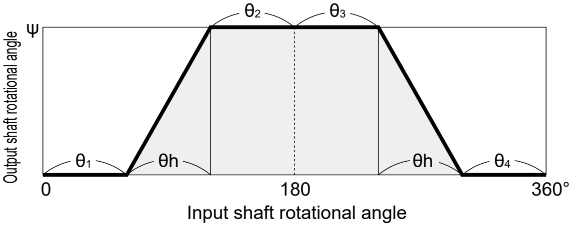

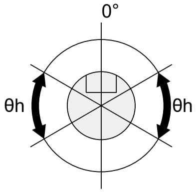

4-4. Standard reducer

This reducer has extremely small backlash from the cam and cam follower. During the full turn (360°) of the input shaft, there is no dwell section and while the rotational speed is constant, it is reduced and outputted.

● Input shaft keyway position and index angle (θh)

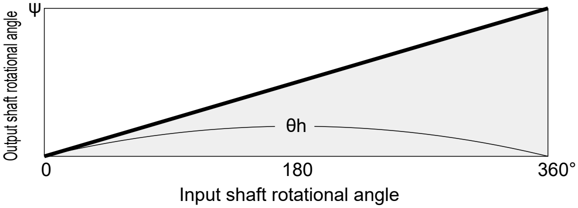

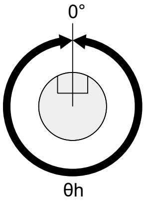

4-5. Sample of special timing chart

● Special index (unequal division)

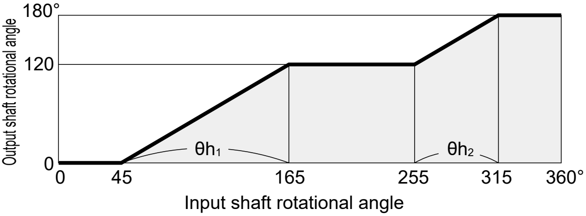

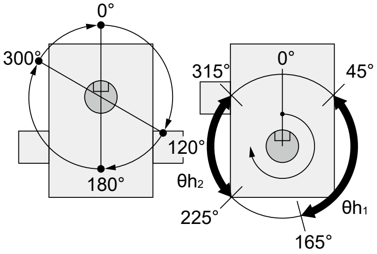

● Special oscillator

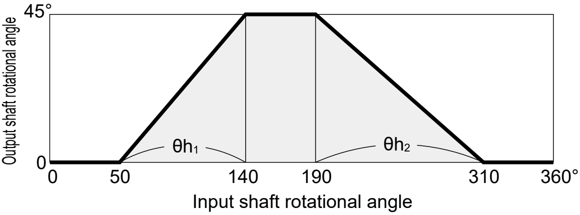

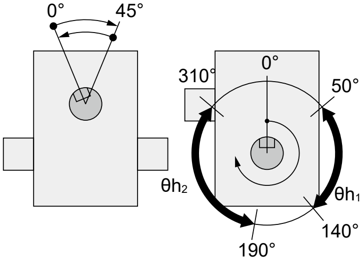

● Special oscillator

(1) When the input shaft turns in the direction a.

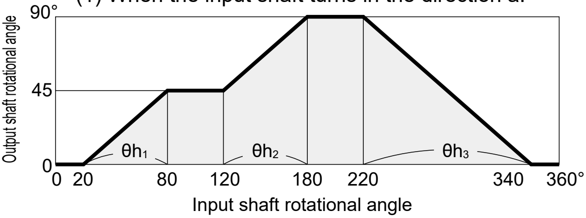

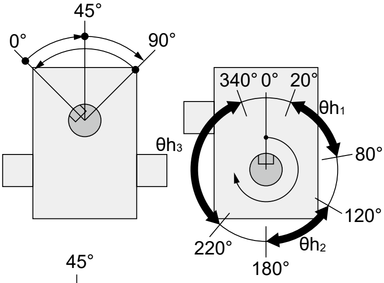

(2) When the input shaft turns in the direction b.

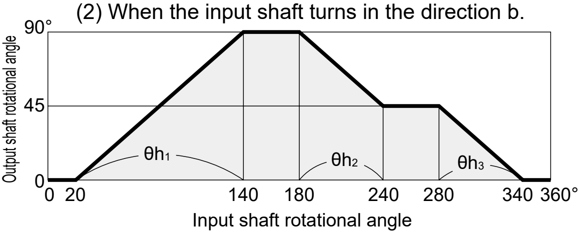

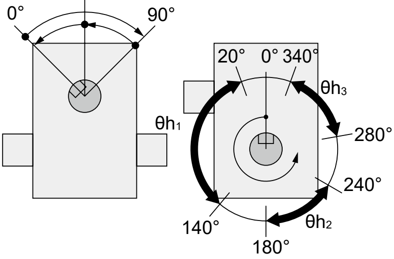

When you order an index drive with special timing, create a timing chart verifying the following points.

(1) Keyway of the input/output shaft and the position of the reference point (0 degrees) for the mounting holes.

(2) Rotational direction of the input/output shaft

(3) Shaft layout in the case of the parallel cam drive

Explanation of operation

5. Cam curve

Overview

The cam curve represents the movement curve of the output shaft driven by the cam. The index drive converts the continuous rotation of the input shaft into intermittent operation of the output shaft. Generally in this case, only the starting and the ending points are taken into consideration, but in order to move the workpiece smoothly at high speeds, how the movement occurs becomes important. To discuss how the workpiece moves throughout the movement, the movement is represented with the movement curve and this is called the cam curve. Characteristics of the movement curve include displacement (S), speed (V), acceleration (A) and jump (J).

Standard curve

There are various cam curves, but the MS curve is the most commonly used today. When we think of a curve to be used with the general purpose index drive, the primary requirement is that the cam curve should be balanced since the index drive is used for various applications. Hence, the MS curve, which has excellent balance, is adopted as the standard curve for various index drive products. When you select a cam curve, we consider it appropriate to select the standard MS curve for most cases.

The cam has existed as a mechanical element for ages, and there are numerous variations. On the contrary, the cam curve is relatively a new notion. This becomes important as the machining accuracy of the cam is increased and flexible cam forms can be created.
In the early days, the cam was manufactured by defining the contour of the cam, and the motion characteristics were not particularly taken into consideration. However, the current cam design defines the motion characteristics of the output shaft first and then creates the cam contour which achieves these characteristics. Hence, it becomes possible to balance high precision and high frequency, which are contradictory at a higher dimension.

Characteristics of the cam curve

Characteristics of the movement curve include displacement (S), speed (V), acceleration (A) and jump (J). These are obtained by differentiating the displacement (S) with time (T) in sequence. The formulae are given as:

$$V=\frac{dS}{Td}$$

$$A=\frac{d^2S}{dT^2}$$

$$J=\frac{d^3S}{dT^3}$$

The subscript "m" is added to the max. values as "Vm", "Am", etc.
When you actually design the curve, values with units are used, but to represent the cam curve, non-dimensional values are used.
The following relationship holds between the non-dimensional values and the actual values with dimensions. Suppose the values with dimensions to be displacement (s), speed (v), acceleration (a) and jump (j).

$$s=h\cdot S$$

$$v=\frac{h}{th}\cdot V$$

$$a=\frac{h}{th^2}\cdot A$$

$$j=\frac{h}{th^3}\cdot J$$

Here, "h" represents the actual size of displacement and "th" represents the time from the start of the displacement to its end.

MS: Modified sine curve

The modified sine curve is similar to a curve with the acceleration peak of the cycloid curve horizontally moved (displaced). The motion characteristics are relatively compact and well balanced, which is why this is commonly used. We use this curve as the standard curve as well.

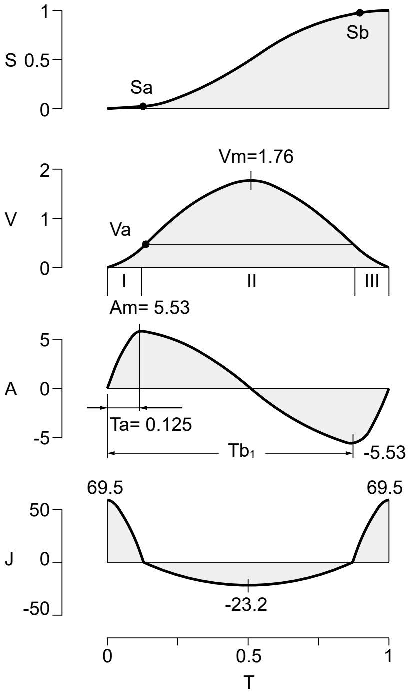

Constant formula

$$Ta=\frac{1}{8}$$

$$Am=\frac{1}{\frac{2Ta}{\pi}+\frac{2-8Ta}{\pi^2}}$$

$$Va=\frac{2TaAm}{\pi}$$

$$Sa=\frac{2Ta^2Am}{\pi}-\frac{4Ta^2Am}{\pi^2}$$

Sb= 1-Sa

Displacement formula

Section I (0 ≤ T ≤ Ta)

$$S=\frac{2TaAm}{\pi}T-\frac{4Ta^2Am}{\pi^2}\sin\frac{\pi T}{2Ta}$$

Section II (Ta < T ≤ 1-Ta)

$$S=\frac{(1-2Ta)^2Am}{\pi^2}\left(1-\cos\frac{\pi(T-Ta)}{1-2Ta}\right)$$
$$+Va(T-Ta)+Sa$$

Section III (1-Ta < T ≤ 1)

$$S=\frac{4Ta^2Am}{\pi^2}\left(\cos\frac{\pi\ (T-1+Ta)}{2Ta}-1\right)$$
$$+Va(T-1+Ta)+Sb$$

Explanation of operation

5. Cam curve

MC: Modified constant velocity curve

The modified constant velocity curve has a constant speed section in the middle of the movement. Although this curve is inferior to MS in terms of motion characteristics, it is used when the workpiece is transferred in the middle of the movement or when the workpiece should be moved at a constant velocity.
Generally, this is called the MCV50 curve, but we abbreviate it as the MC curve. The figure "50" in "MCV50" represents the ratio of the time the output shaft moves at a constant speed. Therefore, MCV50 means the output shaft moves at a constant speed for 50% of the movement time. MCV25 is also used.

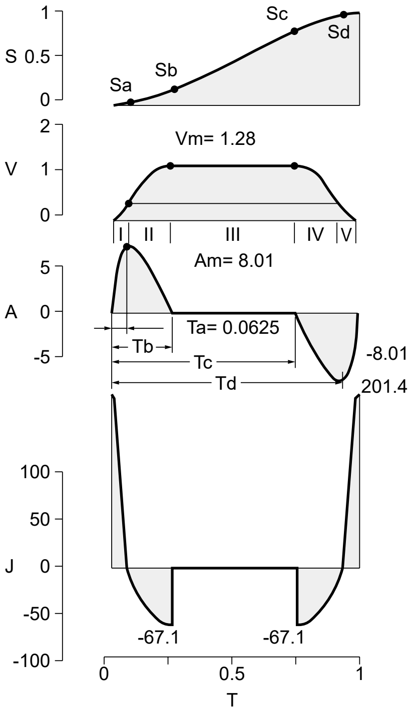

Constant formula

$$Ta=\frac{1}{16}$$

$$Tb=\frac{1}{4}$$

$$Am=\frac{1}{\frac{2}{\pi}\left(\left(2-\frac{8}{\pi}\right)TaTb+\left(\frac{4}{\pi}-2\right)Tb^2+Tb\right)}$$

$$Va=\frac{2TaAm}{\pi}$$

$$Sa=\frac{2Ta^2Am}{\pi}-\frac{4Ta^2Am}{\pi^2}$$

$$Vm=\frac{2TbAm}{\pi}$$

$$Sb=\frac{4(Tb-Ta)^2Am}{\pi^2}+Va(Tb-Ta)+Sa$$

$$Sc=1-Sb$$

$$Sd=1-Sa$$

Displacement formula

Section I ($0 \leq T \leq Ta$)

$$S=\frac{2TaAm}{\pi}T-\frac{4Ta^2Am}{\pi^2}\sin\frac{\pi T}{2Ta}$$

Section II ($Ta < T \leq Tb$)

$$S=\frac{4(Tb-Ta)^2Am}{\pi^2}\left(1-\cos\frac{\pi(T-Ta)}{2(Tb-Ta)}\right)$$
$$+Va\ (T-Ta)+Sa$$

Section III ($Tb < T \leq 1-Tb$)

$$S=Vm(T-Tb)+Sb$$

Section IV ($1-Tb < T \leq 1-Ta$)

$$S=\frac{4(Tb-Ta)^2Am}{\pi^2}\sin\frac{\pi(T-1+Tb)}{2(Tb-Ta)}-\frac{2(Tb-Ta)Am}{\pi}$$
$$\times(T-1+Tb)+Vm(T-1+Tb)+Sc$$

Section V ($1-Ta < T \leq 1$)

$$S=\frac{4Ta^2Am}{\pi^2}\left(\cos\frac{\pi(T-1+Ta)}{2Ta}-1\right)$$
$$+Va(T-1+Ta)+Sd$$

MT: Modified trapezoidal curve

The modified trapezoidal curve has a compact value for the max. acceleration and is suitable for high speeds. Yet, this is not very good except for the acceleration. It is not well balanced compared to the MS from a comprehensive perspective, and the MT is not often used except for special applications.

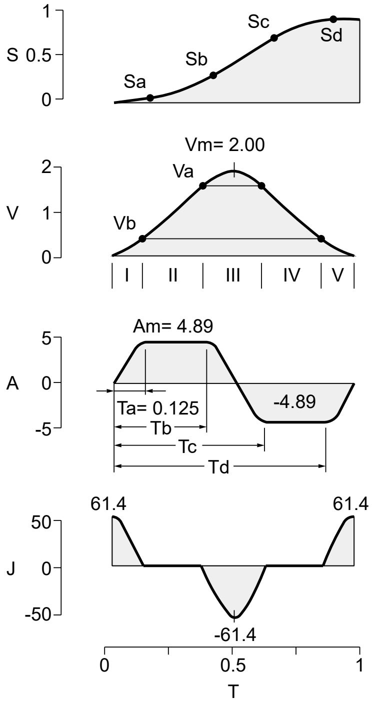

Constant formula

$$Ta=\frac{1}{8}$$

$$Am=\frac{1}{\frac{1}{4}-Ta+\frac{2}{\pi}Ta}$$

$$Va=\frac{2TaAm}{\pi}$$

$$Sa=\frac{2Ta^2Am}{\pi}-\frac{4Ta^2Am}{\pi^2}$$

$$Vb=Am(0.5-2Ta)+Va$$

$$Sb=\frac{Am}{2}(0.5-2Ta)^2+Va(0.5-2Ta)+Sa$$

$$Sc=1-Sb$$

$$Sd=1-Sa$$

Displacement formula

Section I ($0 \leq T \leq Ta$)

$$S=\frac{2TaAm}{\pi}T-\frac{4Ta^2Am}{\pi^2}\sin\frac{\pi T}{2Ta}$$

Section II ($Ta < T \leq 0.5-Ta$)

$$S=\frac{Am}{2}(T-Ta)^2+Va\,(T-Ta)+Sa$$

Section III ($0.5-Ta < T \leq 0.5+Ta$)

$$S=\frac{4Ta^2Am}{\pi^2}\left(1-\cos\frac{\pi\,(T-0.5+Ta)}{2Ta}\right)$$
$$+Vb\,(T-0.5+Ta)+Sb$$

Section IV ($0.5+Ta < T \leq 1-Ta$)

$$S=-\frac{Am}{2}(T-0.5-Ta)^2+Vb\,(T-0.5-Ta)+Sc$$

Section V ($1-Ta < T \leq 1$)

$$S=\frac{4Ta^2Am}{\pi^2}\left(\cos\frac{\pi\,(T-1+Ta)}{2Ta}-1\right)$$
$$+Va(T-1+Ta)+Sd$$

Explanation of operation

5. Cam curve

TR: Trapecloid curve (Asymmetrical cam curve)

This curve is used when you want to minimize the residual vibration at dwell intervals.
This does not hold in every case, but if the residual vibration at high speeds becomes an issue with a system of sufficient rigidity, this curve can mitigate residual vibration more than other curves. The vibration issue, however, is closely related to the rigidity of the machinery or the backlash load rather than the cam curve, and adopting this curve does not guarantee the complete elimination of residual vibrations.
In addition, since this curve is an asymmetrical cam curve, the system does not work properly if the input shaft rotation is reversed. Hence, the rotational direction of the input/output shaft will have to be determined beforehand.

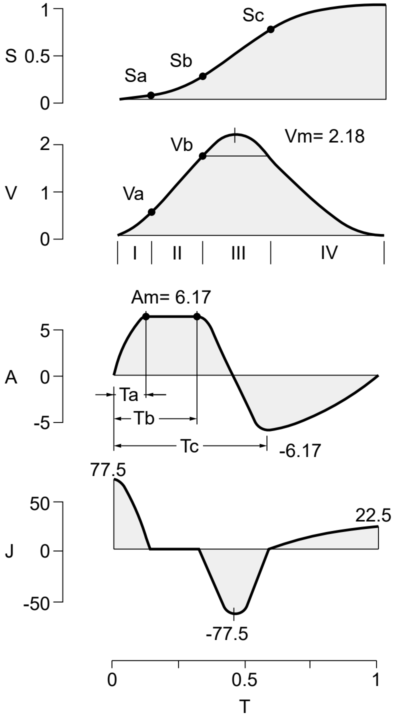

Constant formula

$$Ta=\frac{1}{8}$$

$$Tb=\frac{2-6Ta+\pi Ta}{2+\pi}$$

$$Tc=\frac{2-2Ta+3\pi Ta}{2+\pi}$$

$$Am=1\Bigg/\left(\left(-\frac{3}{2}+\frac{4}{\pi}+\frac{4}{\pi^2}\right)Ta^2+\left(1+\frac{2}{\pi}\right)TaTb+\frac{1}{2}Tb^2+\left(\frac{2}{\pi}-\frac{4}{\pi^2}\right)(1-Tc)^2\right)$$

$$Va=\frac{2TaAm}{\pi} \qquad Sa=\frac{2Ta^2Am}{\pi}-\frac{4Ta^2Am}{\pi^2}$$

$$Vb=Am(Tb-Ta)+Va$$

$$Sb=\frac{Am}{2}(Tb-Ta)^2+Va(Tb-Ta)+Sa$$

$$Sc=\frac{8Ta^2Am}{\pi^2}+2VbTa+Sb$$

Displacement formula

Section I ($0 \leq T \leq Ta$)

$$S=\frac{2TaAm}{\pi}T-\frac{4Ta^2Am}{\pi^2}\sin\frac{\pi T}{2Ta}$$

Section II ($Ta < T \leq Tb$)

$$S=\frac{Am}{2}(T-Ta)^2+Va(T-Ta)+Sa$$

Section III ($Tb < T \leq Tc$)

$$S=\frac{4Ta^2Am}{\pi^2}\left(1-\cos\frac{\pi(T-Tb)}{2Ta}\right)+Vb(T-Tb)+Sb$$

Section IV ($Tc < T \leq 1$)

$$S=\frac{4(1-Tc)^2Am}{\pi^2}\left(\cos\frac{\pi(T-Tc)}{2(1-Tc)}-1\right)+Vb(T-Tc)+Sc$$

Cam curve characteristics table and how to use it

The cam curve characteristics table is shown below. All these values do not have dimensions, and to convert them into values with units a simple calculation is required.

(Sample)

Index number = 6	Index angle = 270°
Cam curve = MS	Input shaft rotational speed = 60 rpm

For an index with the above specifications, let us try to calculate the position of the input shaft and the output shaft angular speed when the output shaft moves 11 degrees. Since the index number is 6, the size of displacement (h) (in this case, the oscillating angle of the output shaft) is

$$h=\frac{360}{6}=60°$$

and the time (th) required to move 60 degrees is

$$th=\frac{\theta h}{360}\times\frac{60}{N}$$

θh: Index angle (degrees)
N: Input shaft rotational speed (rpm)

$$th=\frac{270}{360}\times\frac{60}{60}=0.75\text{ (sec)}$$

First, when the output shaft position of 11 degrees is represented with a non-dimensional value, the calculation will be:

$$S=\frac{11}{60}=0.1833$$

When we search this value in the non-dimensional displacement (S) in the cam curve characteristics table, we can obtain close values of 0.17789 and 0.19132. The non-dimensional time (T) at this time is 0.30 and 0.31 respectively. From these values, when you obtain the non-dimensional time when S is 0.1833, with the proportional interpolation, the calculation will be:

$$T=0.3+(0.31-0.3)\times\frac{(0.1833-0.17789)}{(0.19132-0.17789)}=0.304$$

In the same manner, non-dimensional speed (V) is

$$V=1.32295+(1.36325-1.32295)\times\frac{(0.1833-0.17789)}{(0.19132-0.17789)}$$
$$=1.339$$

Since the input shaft rotates at a constant speed, Non-dimensional time = Non-dimensional input shaft position, which does not pose any problems. That is, the input shaft position (θ) is

$\theta = \theta h \times T = 270 \times 0.304 = 82.08°$

Then, the speed (v) at this time is

$$v=\frac{h}{th}\times V\times\frac{\pi}{180}=\frac{60}{0.75}\times 1.339\times\frac{\pi}{180}$$
$$=107.12\times\frac{\pi}{180}=1.8696\text{(rad/s)}$$

List of characteristics of the cam curve

Name	Acceleration curve	Vm	Am	Jm	Qm
MS Modified sine curve	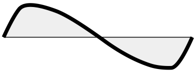	1.76	±5.53	+69.5 -23.2	±0.99
MC Modified constant velocity curve (MCV50)	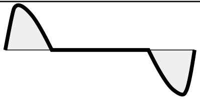	1.28	±8.01	+201.4 -67.1	±0.72
Modified constant velocity curve (MCV25)	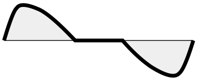	1.48	±6.19	+103.8 -34.6	±0.83
MT Modified trapezoidal curve	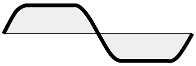	2.00	±4.89	±61.4	±1.65
TR Trapecloid curve	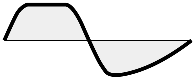	2.18	±6.17	±77.5	±1.76

Explanation of operation MS

5. Cam curve characteristics table

● MS Modified sine curve

Non-dimensional time	Non-dimensional displacement	Non-dimensional speed	Non-dimensional acceleration	Non-dimensional saltation	Torque coefficient
T	S	V	A	J	Q=(A·V)/Am
0.00000	0.00000	0.00000	0.00000	69.46636	0.00000
0.01000	0.00001	0.00347	0.69284	68.91859	0.00043
0.02000	0.00009	0.01382	1.37475	67.28394	0.00344
0.03000	0.00031	0.03089	2.03498	64.58819	0.01137
0.04000	0.00073	0.05441	2.66311	60.87383	0.02621
0.05000	0.00142	0.08401	3.24925	56.19946	0.04938
0.06000	0.00243	0.11923	3.78415	50.63880	0.08162
0.07000	0.00382	0.15950	4.25936	44.27952	0.12289
0.08000	0.00564	0.20419	4.66741	37.22194	0.17240
0.09000	0.00792	0.25260	5.00185	29.57734	0.22856
0.10000	0.01070	0.30396	5.25740	21.46628	0.28909
0.11000	0.01400	0.35747	5.43004	13.01670	0.35114
0.12000	0.01785	0.41228	5.51705	4.36183	0.41147
0.13000	0.02225	0.46754	5.52674	-0.48493	0.46744
0.14000	0.02720	0.52277	5.51705	-1.45394	0.52173
0.15000	0.03270	0.57785	5.49767	-2.42040	0.57468
0.16000	0.03876	0.63269	5.46865	-3.38262	0.62590
0.17000	0.04536	0.68719	5.43004	-4.33890	0.67502
0.18000	0.05250	0.74126	5.38190	-5.28757	0.72167
0.19000	0.06018	0.79480	5.32432	-6.22696	0.76552
0.20000	0.06839	0.84771	5.25740	-7.15543	0.80622
0.21000	0.07713	0.89991	5.18125	-8.07134	0.84347
0.22000	0.08639	0.95131	5.09602	-8.97310	0.87697
0.23000	0.09616	1.00180	5.00185	-9.85911	0.90646
0.24000	0.10642	1.05131	4.89890	-10.72783	0.93168
0.25000	0.11718	1.09975	4.78735	-11.57773	0.95241
0.26000	0.12841	1.14703	4.66741	-12.40731	0.96847
0.27000	0.14012	1.19307	4.53928	-13.21513	0.97969
0.28000	0.15227	1.23779	4.40318	-13.99977	0.98594
0.29000	0.16487	1.28111	4.25936	-14.75984	0.98711
0.30000	0.17789	1.32295	4.10807	-15.49402	0.98315
0.31000	0.19132	1.36325	3.94957	-16.20102	0.97400
0.32000	0.20515	1.40192	3.78415	-16.87960	0.95968
0.33000	0.21935	1.43891	3.61208	-17.52856	0.94021
0.34000	0.23392	1.47414	3.43368	-18.14678	0.91566
0.35000	0.24883	1.50756	3.24925	-18.73315	0.88612
0.36000	0.26406	1.53911	3.05912	-19.28667	0.85173
0.37000	0.27961	1.56873	2.86363	-19.80635	0.81264
0.38000	0.29543	1.59636	2.66311	-20.29128	0.76905
0.39000	0.31153	1.62197	2.45792	-20.74061	0.72119
0.40000	0.32787	1.64551	2.24842	-21.15356	0.66929
0.41000	0.34443	1.66693	2.03498	-21.52940	0.61364
0.42000	0.36120	1.68620	1.81796	-21.86746	0.55453
0.43000	0.37815	1.70328	1.59776	-22.16717	0.49230
0.44000	0.39525	1.71814	1.37475	-22.42798	0.42728
0.45000	0.41250	1.73076	1.14933	-22.64945	0.35985
0.46000	0.42986	1.74112	0.92189	-22.83118	0.29036
0.47000	0.44732	1.74920	0.69284	-22.97286	0.21923
0.48000	0.46484	1.75498	0.46257	-23.07424	0.14685
0.49000	0.48241	1.75845	0.23149	-23.13514	0.07364
0.50000	0.50000	1.75960	0.00000	-23.15545	0.00000

● MS Modified sine curve

Non-dimensional time T	Non-dimensional displacement S	Non-dimensional speed V	Non-dimensional acceleration A	Non-dimensional saltation J	Torque coefficient Q=(A·V)/Am
0.50000	0.50000	1.75960	0.00000	-23.15545	0.00000
0.51000	0.51759	1.75845	-0.23149	-23.13514	-0.07364
0.52000	0.53516	1.75498	-0.46257	-23.07424	-0.14685
0.53000	0.55268	1.74920	-0.69284	-22.97286	-0.21923
0.54000	0.57014	1.74112	-0.92189	-22.83118	-0.29036
0.55000	0.58750	1.73076	-1.14933	-22.64945	-0.35985
0.56000	0.60475	1.71814	-1.37475	-22.42798	-0.42728
0.57000	0.62185	1.70328	-1.59776	-22.16717	-0.49230
0.58000	0.63880	1.68620	-1.81796	-21.86746	-0.55453
0.59000	0.65557	1.66693	-2.03498	-21.52940	-0.61364
0.60000	0.67213	1.64551	-2.24842	-21.15356	-0.66929
0.61000	0.68847	1.62197	-2.45792	-20.74061	-0.72119
0.62000	0.70457	1.59636	-2.66311	-20.29128	-0.76905
0.63000	0.72039	1.56873	-2.86363	-19.80635	-0.81264
0.64000	0.73594	1.53911	-3.05912	-19.28667	-0.85173
0.65000	0.75117	1.50756	-3.24925	-18.73315	-0.88612
0.66000	0.76608	1.47414	-3.43368	-18.14678	-0.91566
0.67000	0.78065	1.43891	-3.61208	-17.52856	-0.94021
0.68000	0.79485	1.40192	-3.78415	-16.87960	-0.95968
0.69000	0.80868	1.36325	-3.94957	-16.20102	-0.97400
0.70000	0.82211	1.32295	-4.10807	-15.49402	-0.98315
0.71000	0.83513	1.28111	-4.25936	-14.75984	-0.98711
0.72000	0.84773	1.23779	-4.40318	-13.99977	-0.98594
0.73000	0.85988	1.19307	-4.53928	-13.21513	-0.97969
0.74000	0.87159	1.14703	-4.66741	-12.40731	-0.96847
0.75000	0.88282	1.09975	-4.78735	-11.57773	-0.95241
0.76000	0.89358	1.05131	-4.89890	-10.72783	-0.93168
0.77000	0.90384	1.00180	-5.00185	-9.85911	-0.90646
0.78000	0.91361	0.95131	-5.09602	-8.97310	-0.87697
0.79000	0.92287	0.89991	-5.18125	-8.07134	-0.84347
0.80000	0.93161	0.84771	-5.25740	-7.15543	-0.80622
0.81000	0.93982	0.79480	-5.32432	-6.22696	-0.76552
0.82000	0.94750	0.74126	-5.38190	-5.28757	-0.72167
0.83000	0.95464	0.68719	-5.43004	-4.33890	-0.67502
0.84000	0.96124	0.63269	-5.46865	-3.38262	-0.62590
0.85000	0.96730	0.57785	-5.49767	-2.42040	-0.57468
0.86000	0.97280	0.52277	-5.51705	-1.45394	-0.52173
0.87000	0.97775	0.46754	-5.52674	-0.48493	-0.46744
0.88000	0.98215	0.41228	-5.51705	4.36183	-0.41147
0.89000	0.98600	0.35747	-5.43004	13.01670	-0.35114
0.90000	0.98930	0.30396	-5.25740	21.46628	-0.28909
0.91000	0.99208	0.25260	-5.00185	29.57734	-0.22856
0.92000	0.99436	0.20419	-4.66741	37.22194	-0.17240
0.93000	0.99618	0.15950	-4.25936	44.27952	-0.12289
0.94000	0.99757	0.11923	-3.78415	50.63880	-0.08162
0.95000	0.99858	0.08401	-3.24925	56.19946	-0.04938
0.96000	0.99927	0.05541	-2.66311	60.87383	-0.02621
0.97000	0.99969	0.03089	-2.03498	64.58819	-0.01137
0.98000	0.99991	0.01382	-1.37475	67.28394	-0.00344
0.99000	0.99999	0.00347	-0.69284	68.91859	-0.00043
1.00000	1.00000	0.00000	0.00000	69.46636	0.00000

Explanation of operation MCV50

5. Cam curve characteristics table

● MC Modified constant velocity curve (MCV50)

Non-dimensional time T	Non-dimensional displacement S	Non-dimensional speed V	Non-dimensional acceleration A	Non-dimensional saltation J	Torque coefficient Q=(A·V)/Am
0.00000	0.00000	0.00000	0.00000	201.38070	0.00000
0.01000	0.00003	0.01002	1.99267	195.05395	0.00249
0.02000	0.00027	0.03944	3.86014	176.47125	0.01900
0.03000	0.00088	0.08641	5.48506	146.80021	0.05915
0.04000	0.00204	0.14799	6.76533	107.90517	0.12495
0.05000	0.00388	0.22030	7.62051	62.23006	0.20951
0.06000	0.00647	0.29880	7.99687	12.64480	0.29821
0.07000	0.00986	0.37887	7.99687	-4.21493	0.37812
0.08000	0.01404	0.45853	7.92673	-9.80610	0.45362
0.09000	0.01902	0.53722	7.80098	-15.32849	0.52303
0.10000	0.02478	0.61437	7.62051	-20.74335	0.58430
0.11000	0.03131	0.68945	7.38660	-26.01272	0.63558
0.12000	0.03856	0.76193	7.10087	-31.09963	0.67523
0.13000	0.04653	0.83130	6.76533	-35.96839	0.70189
0.14000	0.05518	0.89708	6.38234	-40.58486	0.71455
0.15000	0.06446	0.95880	5.95458	-44.91666	0.71253
0.16000	0.07434	1.01603	5.48506	-48.93340	0.69552
0.17000	0.08477	1.06837	4.97706	-52.60691	0.66362
0.18000	0.09569	1.11546	4.43415	-55.91142	0.61728
0.19000	0.10706	1.15695	3.86014	-58.82375	0.55737
0.20000	0.11881	1.19257	3.25905	-61.32347	0.48506
0.21000	0.13089	1.22206	2.63510	-63.39306	0.40189
0.22000	0.14323	1.24521	1.99267	-65.01798	0.30967
0.23000	0.15577	1.26186	1.33627	-66.18686	0.21044
0.24000	0.16844	1.27190	0.67048	-66.89148	0.10643
0.25000	0.18119	1.27526	0.00000	0.00000	0.00000
0.26000	0.19394	1.27526	0.00000	0.00000	0.00000
0.27000	0.20669	1.27526	0.00000	0.00000	0.00000
0.28000	0.21944	1.27526	0.00000	0.00000	0.00000
0.29000	0.23220	1.27526	0.00000	0.00000	0.00000
0.30000	0.24495	1.27526	0.00000	0.00000	0.00000
0.31000	0.25770	1.27526	0.00000	0.00000	0.00000
0.32000	0.27045	1.27526	0.00000	0.00000	0.00000
0.33000	0.28321	1.27526	0.00000	0.00000	0.00000
0.34000	0.29596	1.27526	0.00000	0.00000	0.00000
0.35000	0.30871	1.27526	0.00000	0.00000	0.00000
0.36000	0.32146	1.27526	0.00000	0.00000	0.00000
0.37000	0.33422	1.27526	0.00000	0.00000	0.00000
0.38000	0.34697	1.27526	0.00000	0.00000	0.00000
0.39000	0.35972	1.27526	0.00000	0.00000	0.00000
0.40000	0.37247	1.27526	0.00000	0.00000	0.00000
0.41000	0.38523	1.27526	0.00000	0.00000	0.00000
0.42000	0.39798	1.27526	0.00000	0.00000	0.00000
0.43000	0.41073	1.27526	0.00000	0.00000	0.00000
0.44000	0.42348	1.27526	0.00000	0.00000	0.00000
0.45000	0.43624	1.27526	0.00000	0.00000	0.00000
0.46000	0.44899	1.27526	0.00000	0.00000	0.00000
0.47000	0.46174	1.27526	0.00000	0.00000	0.00000
0.48000	0.47449	1.27526	0.00000	0.00000	0.00000
0.49000	0.48725	1.27526	0.00000	0.00000	0.00000
0.50000	0.50000	1.27526	0.00000	0.00000	0.00000

● MC Modified constant velocity curve (MCV50)

Non-dimensional time T	Non-dimensional displacement S	Non-dimensional speed V	Non-dimensional acceleration A	Non-dimensional saltation J	Torque coefficient Q=(A·V)/Am
0.50000	0.50000	1.27526	0.00000	0.00000	0.00000
0.51000	0.51275	1.27526	0.00000	0.00000	0.00000
0.52000	0.52551	1.27526	0.00000	0.00000	0.00000
0.53000	0.53826	1.27526	0.00000	0.00000	0.00000
0.54000	0.55101	1.27526	0.00000	0.00000	0.00000
0.55000	0.56376	1.27526	0.00000	0.00000	0.00000
0.56000	0.57652	1.27526	0.00000	0.00000	0.00000
0.57000	0.58927	1.27526	0.00000	0.00000	0.00000
0.58000	0.60202	1.27526	0.00000	0.00000	0.00000
0.59000	0.61477	1.27526	0.00000	0.00000	0.00000
0.60000	0.62753	1.27526	0.00000	0.00000	0.00000
0.61000	0.64028	1.27526	0.00000	0.00000	0.00000
0.62000	0.65303	1.27526	0.00000	0.00000	0.00000
0.63000	0.66578	1.27526	0.00000	0.00000	0.00000
0.64000	0.67854	1.27526	0.00000	0.00000	0.00000
0.65000	0.69129	1.27526	0.00000	0.00000	0.00000
0.66000	0.70404	1.27526	0.00000	0.00000	0.00000
0.67000	0.71679	1.27526	0.00000	0.00000	0.00000
0.68000	0.72955	1.27526	0.00000	0.00000	0.00000
0.69000	0.74230	1.27526	0.00000	0.00000	0.00000
0.70000	0.75505	1.27526	0.00000	0.00000	0.00000
0.71000	0.76780	1.27526	0.00000	0.00000	0.00000
0.72000	0.78056	1.27526	0.00000	0.00000	0.00000
0.73000	0.79331	1.27526	0.00000	0.00000	0.00000
0.74000	0.80606	1.27526	0.00000	0.00000	0.00000
0.75000	0.81881	1.27526	0.00000	-67.12690	0.00000
0.76000	0.83156	1.27190	-0.67048	-66.89148	-0.10643
0.77000	0.84423	1.26186	-1.33627	-66.18686	-0.21044
0.78000	0.85677	1.24521	-1.99267	-65.01798	-0.30967
0.79000	0.86911	1.22206	-2.63510	-63.39306	-0.40189
0.80000	0.88119	1.19257	-3.25905	-61.32347	-0.48506
0.81000	0.89294	1.15695	-3.86014	-58.82375	-0.55737
0.82000	0.90431	1.11546	-4.43415	-55.91142	-0.61728
0.83000	0.91523	1.06837	-4.97706	-52.60691	-0.66362
0.84000	0.92566	1.01603	-5.48506	-48.93340	-0.69552
0.85000	0.93554	0.95880	-5.95458	-44.91666	-0.71253
0.86000	0.94482	0.89708	-6.38234	-40.58486	-0.71455
0.87000	0.95347	0.83130	-6.76533	-35.96839	-0.70189
0.88000	0.96144	0.76193	-7.10087	-31.09963	-0.67523
0.89000	0.96869	0.68945	-7.38660	-26.01272	-0.63558
0.90000	0.97522	0.61437	-7.62051	-20.74335	-0.58430
0.91000	0.98098	0.53722	-7.80098	-15.32849	-0.52303
0.92000	0.98596	0.45853	-7.92673	-9.80610	-0.45362
0.93000	0.99014	0.37887	-7.99687	-4.21493	-0.37812
0.94000	0.99353	0.29880	-7.99687	12.64480	-0.29821
0.95000	0.99612	0.22030	-7.62051	62.23006	-0.20951
0.96000	0.99796	0.14799	-6.76533	107.90517	-0.12495
0.97000	0.99912	0.08641	-5.48506	146.80021	-0.05915
0.98000	0.99973	0.03944	-3.86014	176.47125	-0.01900
0.99000	0.99997	0.01002	-1.99267	195.05395	-0.00249
1.00000	1.00000	0.00000	0.00000	201.38070	0.00000

Explanation of operation MCV25

5. Cam curve characteristics table

● Modified constant velocity curve (MCV25)

Non-dimensional time T	Non-dimensional displacement S	Non-dimensional speed V	Non-dimensional acceleration A	Non-dimensional saltation J	Torque coefficient Q=(A·V)/Am
0.00000	0.00000	0.00000	0.00000	103.78659	0.00000
0.01000	0.00002	0.00518	1.03302	102.33316	0.00086
0.02000	0.00014	0.02056	2.03710	98.01360	0.00676
0.03000	0.00046	0.04573	2.98413	90.94888	0.02203
0.04000	0.00108	0.07997	3.84758	81.33687	0.04967
0.05000	0.00209	0.12232	4.60327	69.44678	0.09090
0.06000	0.00355	0.17160	5.23003	55.61163	0.14489
0.07000	0.00554	0.22643	5.71030	40.21892	0.20874
0.08000	0.00809	0.28528	6.03065	23.69976	0.27774
0.09000	0.01125	0.34648	6.18208	6.51681	0.34580
0.10000	0.01503	0.40840	6.19053	-1.20737	0.40815
0.11000	0.01942	0.47021	6.16881	-3.13548	0.46828
0.12000	0.02443	0.53171	6.12786	-5.05382	0.52601
0.13000	0.03005	0.59271	6.06779	-6.95640	0.58060
0.14000	0.03628	0.65301	5.98880	-8.83728	0.63134
0.15000	0.04311	0.71242	5.89113	-10.69061	0.67755
0.16000	0.05053	0.77077	5.77510	-12.51059	0.71861
0.17000	0.05852	0.82786	5.64105	-14.29157	0.75392
0.18000	0.06708	0.88353	5.48942	-16.02797	0.78299
0.19000	0.07619	0.93760	5.32066	-17.71439	0.80536
0.20000	0.08582	0.98989	5.13531	-19.34557	0.82065
0.21000	0.09598	1.04025	4.93395	-20.91643	0.82859
0.22000	0.10662	1.08852	4.71720	-22.42205	0.82895
0.23000	0.11774	1.13454	4.48574	-23.85775	0.82160
0.24000	0.12931	1.17818	4.24029	-25.21905	0.80652
0.25000	0.14129	1.21930	3.98162	-26.50171	0.78375
0.26000	0.15368	1.25778	3.71054	-27.70173	0.75344
0.27000	0.16644	1.29348	3.42788	-28.81535	0.71580
0.28000	0.17954	1.32630	3.13453	-29.83912	0.67115
0.29000	0.19296	1.35613	2.83140	-30.76983	0.61989
0.30000	0.20665	1.38290	2.51945	-31.60459	0.56247
0.31000	0.22060	1.40650	2.19964	-32.34079	0.49946
0.32000	0.23477	1.42687	1.87297	-32.97614	0.43144
0.33000	0.24913	1.44394	1.54046	-33.50865	0.35909
0.34000	0.26364	1.45766	1.20315	-33.93666	0.28313
0.35000	0.27827	1.46799	0.86208	-34.25885	0.20430
0.36000	0.29299	1.47489	0.51833	-34.47420	0.12342
0.37000	0.30776	1.47835	0.17296	-34.58204	0.04128
0.38000	0.32255	1.47878	0.00000	0.00000	0.00000
0.39000	0.33733	1.47878	0.00000	0.00000	0.00000
0.40000	0.35212	1.47878	0.00000	0.00000	0.00000
0.41000	0.36691	1.47878	0.00000	0.00000	0.00000
0.42000	0.38170	1.47878	0.00000	0.00000	0.00000
0.43000	0.39649	1.47878	0.00000	0.00000	0.00000
0.44000	0.41127	1.47878	0.00000	0.00000	0.00000
0.45000	0.42606	1.47878	0.00000	0.00000	0.00000
0.46000	0.44085	1.47878	0.00000	0.00000	0.00000
0.47000	0.45564	1.47878	0.00000	0.00000	0.00000
0.48000	0.47042	1.47878	0.00000	0.00000	0.00000
0.49000	0.48521	1.47878	0.00000	0.00000	0.00000
0.50000	0.50000	1.47878	0.00000	0.00000	0.00000

● Modified constant velocity curve (MCV25)

Non-dimensional time T	Non-dimensional displacement S	Non-dimensional speed V	Non-dimensional acceleration A	Non-dimensional saltation J	Torque coefficient Q=(A·V)/Am
0.50000	0.50000	1.47878	0.00000	0.00000	0.00000
0.51000	0.51479	1.47878	0.00000	0.00000	0.00000
0.52000	0.52958	1.47878	0.00000	0.00000	0.00000
0.53000	0.54436	1.47878	0.00000	0.00000	0.00000
0.54000	0.55915	1.47878	0.00000	0.00000	0.00000
0.55000	0.57394	1.47878	0.00000	0.00000	0.00000
0.56000	0.58873	1.47878	0.00000	0.00000	0.00000
0.57000	0.60351	1.47878	0.00000	0.00000	0.00000
0.58000	0.61830	1.47878	0.00000	0.00000	0.00000
0.59000	0.63309	1.47878	0.00000	0.00000	0.00000
0.60000	0.64788	1.47878	0.00000	0.00000	0.00000
0.61000	0.66267	1.47878	0.00000	0.00000	0.00000
0.62000	0.67745	1.47878	0.00000	0.00000	0.00000
0.63000	0.69224	1.47835	-0.17296	-34.58204	-0.04128
0.64000	0.70701	1.47489	-0.51833	-34.47420	-0.12342
0.65000	0.72173	1.46799	-0.86208	-34.25885	-0.20430
0.66000	0.73636	1.45766	-1.20315	-33.93666	-0.28313
0.67000	0.75087	1.44394	-1.54046	-33.50865	-0.35909
0.68000	0.76523	1.42687	-1.87297	-32.97614	-0.43144
0.69000	0.77940	1.40650	-2.19964	-32.34079	-0.49946
0.70000	0.79335	1.38290	-2.51945	-31.60459	-0.56247
0.71000	0.80704	1.35613	-2.83140	-30.76983	-0.61989
0.72000	0.82046	1.32630	-3.13453	-29.83912	-0.67115
0.73000	0.83356	1.29348	-3.42788	-28.81535	-0.71580
0.74000	0.84632	1.25778	-3.71054	-27.70173	-0.75344
0.75000	0.85871	1.21930	-3.98162	-26.50171	-0.78375
0.76000	0.87069	1.17818	-4.24029	-25.21905	-0.80652
0.77000	0.88226	1.13454	-4.48574	-23.85775	-0.82160
0.78000	0.89338	1.08852	-4.71720	-22.42205	-0.82895
0.79000	0.90402	1.04025	-4.93395	-20.91643	-0.82859
0.80000	0.91418	0.98989	-5.13531	-19.34557	-0.82065
0.81000	0.92381	0.93760	-5.32066	-17.71439	-0.80536
0.82000	0.93292	0.88353	-5.48942	-16.02797	-0.78299
0.83000	0.94148	0.82786	-5.64105	-14.29157	-0.75392
0.84000	0.94947	0.77077	-5.77510	-12.51059	-0.71861
0.85000	0.95689	0.71242	-5.89113	-10.69061	-0.67755
0.86000	0.96372	0.65301	-5.98880	-8.83728	-0.63134
0.87000	0.96995	0.59271	-6.06779	-6.95640	-0.58060
0.88000	0.97557	0.53171	-6.12786	-5.05382	-0.52601
0.89000	0.98058	0.47021	-6.16881	-3.13548	-0.46828
0.90000	0.98497	0.40840	-6.19053	-1.20737	-0.40815
0.91000	0.98875	0.34648	-6.18208	6.51681	-0.34580
0.92000	0.99191	0.28528	-6.03065	23.69976	-0.27774
0.93000	0.99446	0.22643	-5.71030	40.21892	-0.20874
0.94000	0.99645	0.17160	-5.23003	55.61163	-0.14489
0.95000	0.99791	0.12232	-4.60327	69.44678	-0.09090
0.96000	0.99892	0.07997	-3.84758	81.33687	-0.04967
0.97000	0.99954	0.04573	-2.98413	90.94888	-0.02203
0.98000	0.99986	0.02056	-2.03710	98.01360	-0.00676
0.99000	0.99998	0.00518	-1.03302	102.33316	-0.00086
1.00000	1.00000	0.00000	0.00000	103.78659	0.00000

Explanation of operation MT

5. Cam curve characteristics table

● MT Modified trapezoidal curve

Non-dimensional time T	Non-dimensional displacement S	Non-dimensional speed V	Non-dimensional acceleration A	Non-dimensional saltation J	Torque coefficient Q=(A·V)/Am
0.00000	0.00000	0.00000	0.00000	61.42597	0.00000
0.01000	0.00001	0.00307	0.61264	60.94161	0.00038
0.02000	0.00008	0.01222	1.21563	59.49616	0.00304
0.03000	0.00027	0.02732	1.79944	57.11243	0.01006
0.04000	0.00065	0.04811	2.35487	53.82799	0.02318
0.05000	0.00125	0.07429	2.87317	49.69466	0.04367
0.06000	0.00215	0.10543	3.34615	44.77761	0.07217
0.07000	0.00338	0.14104	3.76636	39.15439	0.10867
0.08000	0.00498	0.18056	4.12718	32.91368	0.15245
0.09000	0.00700	0.22336	4.42291	26.15391	0.20210
0.10000	0.00946	0.26878	4.64888	18.98167	0.25563
0.11000	0.01238	0.31610	4.80154	11.51008	0.31050
0.12000	0.01578	0.36456	4.87848	3.85697	0.36384
0.13000	0.01967	0.41343	4.88812	0.00000	0.41343
0.14000	0.02405	0.46231	4.88812	0.00000	0.46231
0.15000	0.02892	0.51119	4.88812	0.00000	0.51119
0.16000	0.03428	0.56007	4.88812	0.00000	0.56007
0.17000	0.04012	0.60895	4.88812	0.00000	0.60895
0.18000	0.04646	0.65783	4.88812	0.00000	0.65783
0.19000	0.05328	0.70671	4.88812	0.00000	0.70671
0.20000	0.06059	0.75559	4.88812	0.00000	0.75559
0.21000	0.06839	0.80448	4.88812	0.00000	0.80448
0.22000	0.07668	0.85336	4.88812	0.00000	0.85336
0.23000	0.08546	0.90224	4.88812	0.00000	0.90224
0.24000	0.09472	0.95112	4.88812	0.00000	0.95112
0.25000	0.10448	1.00000	4.88812	0.00000	1.00000
0.26000	0.11472	1.04888	4.88812	0.00000	1.04888
0.27000	0.12546	1.09776	4.88812	0.00000	1.09776
0.28000	0.13668	1.14664	4.88812	0.00000	1.14664
0.29000	0.14839	1.19552	4.88812	0.00000	1.19552
0.30000	0.16059	1.24441	4.88812	0.00000	1.24441
0.31000	0.17328	1.29329	4.88812	0.00000	1.29329
0.32000	0.18646	1.34217	4.88812	0.00000	1.34217
0.33000	0.20012	1.39105	4.88812	0.00000	1.39105
0.34000	0.21428	1.43993	4.88812	0.00000	1.43993
0.35000	0.22892	1.48881	4.88812	0.00000	1.48881
0.36000	0.24405	1.53769	4.88812	0.00000	1.53769
0.37000	0.25967	1.58657	4.88812	0.00000	1.58657
0.38000	0.27578	1.63544	4.87848	-3.85697	1.63221
0.39000	0.29238	1.68390	4.80154	-11.51008	1.65408
0.40000	0.30946	1.73122	4.64888	-18.98167	1.64649
0.41000	0.32700	1.77664	4.42291	-26.15391	1.60755
0.42000	0.34498	1.81944	4.12718	-32.91368	1.53621
0.43000	0.36338	1.85896	3.76636	-39.15439	1.43236
0.44000	0.38215	1.89457	3.34615	-44.77761	1.29692
0.45000	0.40125	1.92571	2.87317	-49.69466	1.13190
0.46000	0.42065	1.95189	2.35487	-53.82799	0.94033
0.47000	0.44027	1.97268	1.79944	-57.11243	0.72619
0.48000	0.46008	1.98778	1.21563	-59.49616	0.49434
0.49000	0.48001	1.99693	0.61264	-60.94161	0.25028
0.50000	0.50000	2.00000	0.00000	-61.42597	0.00000

● MT Modified trapezoidal curve

Non-dimensional time T	Non-dimensional displacement S	Non-dimensional speed V	Non-dimensional acceleration A	Non-dimensional saltation J	Torque coefficient Q=(A·V)/Am
0.50000	0.50000	2.00000	0.00000	-61.42597	0.00000
0.51000	0.51999	1.99693	-0.61264	-60.94161	-0.25028
0.52000	0.53992	1.98778	-1.21563	-59.49616	-0.49434
0.53000	0.55973	1.97268	-1.79944	-57.11243	-0.72619
0.54000	0.57935	1.95189	-2.35487	-53.82799	-0.94033
0.55000	0.59875	1.92571	-2.87317	-49.69466	-1.13190
0.56000	0.61785	1.89457	-3.34615	-44.77761	-1.29692
0.57000	0.63662	1.85896	-3.76636	-39.15439	-1.43236
0.58000	0.65502	1.81944	-4.12718	-32.91368	-1.53621
0.59000	0.67300	1.77664	-4.42291	-26.15391	-1.60755
0.60000	0.69054	1.73122	-4.64888	-18.98167	-1.64649
0.61000	0.70762	1.68390	-4.80154	-11.51008	-1.65408
0.62000	0.72422	1.63544	-4.87848	-3.85697	-1.63221
0.63000	0.74033	1.58657	-4.88812	0.00000	-1.58657
0.64000	0.75595	1.53769	-4.88812	0.00000	-1.53769
0.65000	0.77108	1.48881	-4.88812	0.00000	-1.48881
0.66000	0.78572	1.43993	-4.88812	0.00000	-1.43993
0.67000	0.79988	1.39105	-4.88812	0.00000	-1.39105
0.68000	0.81354	1.34217	-4.88812	0.00000	-1.34217
0.69000	0.82672	1.29329	-4.88812	0.00000	-1.29329
0.70000	0.83941	1.24441	-4.88812	0.00000	-1.24441
0.71000	0.85161	1.19552	-4.88812	0.00000	-1.19552
0.72000	0.86332	1.14664	-4.88812	0.00000	-1.14664
0.73000	0.87454	1.09776	-4.88812	0.00000	-1.09776
0.74000	0.88528	1.04888	-4.88812	0.00000	-1.04888
0.75000	0.89552	1.00000	-4.88812	0.00000	-1.00000
0.76000	0.90528	0.95112	-4.88812	0.00000	-0.95112
0.77000	0.91454	0.90224	-4.88812	0.00000	-0.90224
0.78000	0.92332	0.85336	-4.88812	0.00000	-0.85336
0.79000	0.93161	0.80448	-4.88812	0.00000	-0.80448
0.80000	0.93941	0.75559	-4.88812	0.00000	-0.75559
0.81000	0.94672	0.70671	-4.88812	0.00000	-0.70671
0.82000	0.95354	0.65783	-4.88812	0.00000	-0.65783
0.83000	0.95988	0.60895	-4.88812	0.00000	-0.60895
0.84000	0.96572	0.56007	-4.88812	0.00000	-0.56007
0.85000	0.97108	0.51119	-4.88812	0.00000	-0.51119
0.86000	0.97595	0.46231	-4.88812	0.00000	-0.46231
0.87000	0.98033	0.41343	-4.88812	0.00000	-0.41343
0.88000	0.98422	0.36456	-4.87848	3.85697	-0.36384
0.89000	0.98762	0.31610	-4.80154	11.51008	-0.31050
0.90000	0.99054	0.26878	-4.64888	18.98167	-0.25563
0.91000	0.99300	0.22336	-4.42291	26.15391	-0.20210
0.92000	0.99502	0.18056	-4.12718	32.91368	-0.15245
0.93000	0.99662	0.14104	-3.76636	39.15439	-0.10867
0.94000	0.99785	0.10543	-3.34615	44.77761	-0.07217
0.95000	0.99875	0.07429	-2.87317	49.69466	-0.04367
0.96000	0.99935	0.04811	-2.35487	53.82799	-0.02318
0.97000	0.99973	0.02732	-1.79944	57.11243	-0.01006
0.98000	0.99992	0.01222	-1.21563	59.49616	-0.00304
0.99000	0.99999	0.00307	-0.61264	60.94161	-0.00038
1.00000	1.00000	0.00000	0.00000	61.42597	0.00000

Explanation of operation TR

5. Cam curve characteristics table

● TR Trapecloid (Asymmetrical cam)

Non-dimensional time T	Non-dimensional displacement S	Non-dimensional speed V	Non-dimensional acceleration A	Non-dimensional saltation J	Torque coefficient Q=(A·V)/Am
0.00000	0.00000	0.00000	0.00000	77.54006	0.00000
0.01000	0.00001	0.00387	0.77336	76.92864	0.00049
0.02000	0.00010	0.01543	1.53453	75.10400	0.00384
0.03000	0.00035	0.03448	2.27149	72.09493	0.01269
0.04000	0.00082	0.06074	2.97263	67.94888	0.02926
0.05000	0.00158	0.09378	3.62689	62.73123	0.05512
0.06000	0.00271	0.13308	4.22396	56.52427	0.09110
0.07000	0.00426	0.17804	4.75441	49.42590	0.13718
0.08000	0.00629	0.22792	5.20988	41.54804	0.19244
0.09000	0.00884	0.28196	5.58318	33.01495	0.25512
0.10000	0.01194	0.33929	5.86844	23.96120	0.32269
0.11000	0.01563	0.39902	6.06115	14.52956	0.39195
0.12000	0.01993	0.46020	6.15827	4.86878	0.45929
0.13000	0.02484	0.52188	6.17044	0.00000	0.52188
0.14000	0.03036	0.58358	6.17044	0.00000	0.58358
0.15000	0.03651	0.64529	6.17044	0.00000	0.64529
0.16000	0.04327	0.70699	6.17044	0.00000	0.70699
0.17000	0.05065	0.76870	6.17044	0.00000	0.76870
0.18000	0.05864	0.83040	6.17044	0.00000	0.83040
0.19000	0.06726	0.89211	6.17044	0.00000	0.89211
0.20000	0.07649	0.95381	6.17044	0.00000	0.95381
0.21000	0.08633	1.01552	6.17044	0.00000	1.01552
0.22000	0.09680	1.07722	6.17044	0.00000	1.07722
0.23000	0.10788	1.13892	6.17044	0.00000	1.13892
0.24000	0.11957	1.20063	6.17044	0.00000	1.20063
0.25000	0.13189	1.26233	6.17044	0.00000	1.26233
0.26000	0.14482	1.32404	6.17044	0.00000	1.32404
0.27000	0.15837	1.38574	6.17044	0.00000	1.38574
0.28000	0.17254	1.44745	6.17044	0.00000	1.44745
0.29000	0.18732	1.50915	6.17044	0.00000	1.50915
0.30000	0.20272	1.57086	6.17044	0.00000	1.57086
0.31000	0.21874	1.63256	0.20000	0.00000	1.63256
0.32000	0.23537	1.69426	6.17032	-0.49473	1.69423
0.33000	0.25262	1.75578	6.11673	-10.20898	1.74050
0.34000	0.27048	1.81628	5.96667	-19.76223	1.75630
0.35000	0.28894	1.87480	5.72252	-29.00381	1.73871
0.36000	0.30797	1.93043	5.38812	-37.78799	1.68568
0.37000	0.32754	1.98228	4.96875	-45.97623	1.59623
0.38000	0.34760	2.02954	4.47102	-53.43939	1.47058
0.39000	0.36811	2.07146	3.90277	-60.05979	1.31019
0.40000	0.38901	2.10739	3.27298	-65.73300	1.11782
0.41000	0.41023	2.13675	2.59157	-70.36957	0.89743
0.42000	0.43172	2.15909	1.86929	-73.89636	0.65408
0.43000	0.45339	2.17404	1.11753	-76.25777	0.39374
0.44000	0.47517	2.18138	0.34815	-77.41655	0.12308
0.45000	0.49699	2.18098	-0.42673	-77.35442	-0.15083
0.46000	0.51877	2.17287	-1.19487	-76.07236	-0.42076
0.47000	0.54043	2.15715	-1.94418	-73.59060	-0.67967
0.48000	0.56189	2.13408	-2.66282	-69.94827	-0.92095
0.49000	0.58308	2.10403	-3.33946	-65.20282	-1.13871
0.50000	0.60395	2.06747	-3.96344	-59.42908	-1.32799

● TR trapecloid

Non-dimensional time T	Non-dimensional displacement S	Non-dimensional speed V	Non-dimensional acceleration A	Non-dimensional saltation J	Torque coefficient Q=(A·V)/Am
0.50000	0.60395	2.06747	-3.96344	-59.42908	-1.32799
0.51000	0.62441	2.02497	-4.52492	-52.71810	-1.48496
0.52000	0.64443	1.97721	-5.01503	-45.17573	-1.60698
0.53000	0.66394	1.92494	-5.42606	-36.92091	-1.69272
0.54000	0.68291	1.86897	-5.75151	-28.08383	-1.74208
0.55000	0.70131	1.81021	-5.98626	-18.80385	-1.75617
0.56000	0.71911	1.74956	-6.12660	-9.22732	-1.73713
0.57000	0.73630	1.68800	-6.17043	0.04171	-1.68800
0.58000	0.75287	1.62631	-6.16591	0.86297	-1.62511
0.59000	0.76883	1.56471	-6.15318	1.68309	-1.56033
0.60000	0.78417	1.50327	-6.13225	2.50096	-1.49397
0.61000	0.79889	1.44209	-6.10317	3.31551	-1.42637
0.62000	0.81301	1.38124	-6.06596	4.12564	-1.35785
0.63000	0.82652	1.32080	-6.02067	4.93028	-1.28874
0.64000	0.83943	1.26085	-5.96737	5.72835	-1.21936
0.65000	0.85174	1.20148	-5.90613	6.51880	-1.15001
0.66000	0.86346	1.14275	-5.83703	7.30058	-1.08101
0.67000	0.87460	1.08476	-5.76015	8.07263	-1.01263
0.68000	0.88516	1.02758	-5.67561	8.83394	-0.94517
0.69000	0.89515	0.97127	-5.58351	9.58349	-0.87889
0.70000	0.90459	0.91593	-5.48398	10.32028	-0.81403
0.71000	0.91347	0.86162	-5.37715	11.04334	-0.75085
0.72000	0.92182	0.80841	-5.26317	11.75169	-0.68955
0.73000	0.92964	0.75638	-5.14217	12.44441	-0.63033
0.74000	0.93695	0.70559	-5.01433	13.12055	-0.57339
0.75000	0.94376	0.65612	-4.87982	13.77923	-0.51888
0.76000	0.95008	0.60802	-4.73881	14.41957	-0.46695
0.77000	0.95593	0.56136	-4.59149	15.04071	-0.41771
0.78000	0.96131	0.51621	-4.43806	15.64183	-0.37128
0.79000	0.96626	0.47262	-4.27872	16.22213	-0.32772
0.80000	0.97077	0.43065	-4.11369	16.78084	-0.28711
0.81000	0.97487	0.39036	-3.94318	17.31721	-0.24946
0.82000	0.97858	0.35181	-3.76742	17.83052	-0.21480
0.83000	0.98192	0.31503	-3.58665	18.32010	-0.18312
0.84000	0.98489	0.28009	-3.40110	18.78530	-0.15438
0.85000	0.98752	0.24702	-3.21103	19.22548	-0.12855
0.86000	0.98984	0.21588	-3.01668	19.64008	-0.10554
0.87000	0.99185	0.18670	-2.81831	20.02853	-0.08528
0.88000	0.99358	0.15953	-2.61620	20.39032	-0.06764
0.89000	0.99505	0.13439	-2.41060	20.72497	-0.05250
0.90000	0.99627	0.11133	-2.20179	21.03203	-0.03972
0.91000	0.99728	0.09037	-1.99005	21.31109	-0.02914
0.92000	0.99809	0.07154	-1.77566	21.56178	-0.02059
0.93000	0.99872	0.05486	-1.55891	21.78377	-0.01386
0.94000	0.99919	0.04036	-1.34008	21.97677	-0.00877
0.95000	0.99953	0.02806	-1.11947	22.14051	-0.00509
0.96000	0.99976	0.01798	-0.89737	22.27477	-0.00261
0.97000	0.99990	0.01012	-0.67408	22.37939	-0.00111
0.98000	0.99997	0.00450	-0.44988	22.45421	-0.00033
0.99000	1.00000	0.00113	-0.22509	22.49915	-0.00004
1.00000	1.00000	0.00000	0.00000	22.51413	0.00000

Explanation of characteristics

Explanation of allowable values and characteristics

● **Dynamic rated output torque**

The dynamic rated output torque represents the max. torque that can be applied to the output shaft while it is moving.
When you select the size of index drive, obtain the load torque that ultimately applies to the output shaft taking the weight of the workpiece, movement speed, index number, index angle, etc. into consideration. Based on this value, the appropriate size should be selected. The output torque table contains the allowable rated torque values for each speed of the various models and specifications.

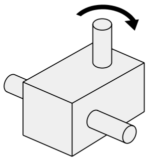

● **Static rated output torque**

The static rated output torque represents the max. torque that can be applied to the output shaft within the index angle when the input shaft is stopped.
As in the case of the dynamic rated output torque, the static rated output torque varies depending on the specifications including index number and index angle, even if the size is the same. If a torque greater than this is applied to the output shaft, the internal components may be damaged.

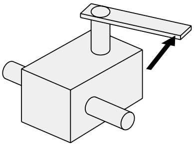

● **Input/Output shaft tolerance**
Thrust force

The allowable thrust force indicates the max. force that can be applied in the direction parallel to the axis (thrust). This is not an issue for the input shaft, but this restricts the load value of the table for the output shaft.

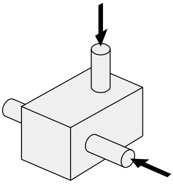

● **Input/Output shaft tolerance**
Radial force

The allowable radial force indicates the max. force that can be applied in the direction perpendicular to the axis (radial). This restricts the tension of the pulley attached to the input shaft and the table load when the output shaft is installed horizontally such as in Position #5. The value indicates the force that can be applied to the center of the shaft.
When you want to know the value if the force is applied to the end or to the shaft extension, please contact us.

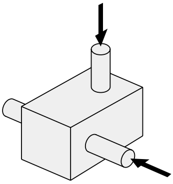

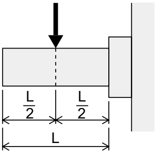

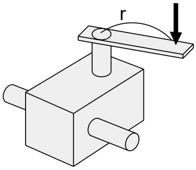

● Allowable bending moment for the output shaft	The allowable bending moment for the output shaft indicates the max. load that can be applied to the spot offset from the center of the output shaft. The unit is "N·m" and the moment will be the position of the point of action (r) multiplied by load.
● Moment of inertia of the input shaft	This indicates the total moment of inertia of the input shaft and the cam. This is required to select a clutch brake. Generally, when the clutch brake is activated to start or stop the motion, it is performed at the cam dwell section. Hence, there is no need to consider the moment of inertia of the output shaft as a load.
● Moment of inertia of the output shaft	This represents the moment of inertia of the output shaft itself. In most cases, this value is not often used, but when a motor is selected for high speed operation, the value of the moment of inertia of the output shaft should be added to the moment of inertia of the load. This is because the moment of inertia of the output shaft at low speeds is negligible compared to the moment of inertia of the load although it becomes relatively greater at high speeds. That is, the output shaft itself becomes a load at high speeds. If a motor is selected disregarding the moment of inertia of the output shaft, the system may not work properly at high speeds due to insufficient capacity.
● Internal frictional torque	This indicates that a torque is required to rotate the input shaft of the index drive itself. The index drive has a preload to maintain accuracy, and so even without a load, a certain amount of torque is required to rotate it. This value is required when you select a reducer or a motor.

Explanation of accuracy

Indexing accuracy

We can think of 2 types of indexing accuracy for the index drive. One is the dynamic indexing accuracy when a load is applied to the system, and the other is the static indexing accuracy when the system is stopped or no load is applied. Generally, when we mention "indexing accuracy," we refer to the static indexing accuracy.
The factors that affect accuracy include the machining accuracy of the output shaft, the accuracy of the cam follower, the accuracy of the journals and bearings, and the accuracy of assembly and adjustment. Taking all these factors into consideration, we try to achieve the optimum result with a 1-piece design of the output shaft and turret and high precision cam follower.

Static indexing accuracy

The static indexing accuracy is the statically measured accuracy of the index drive itself. Factors closely related to the indexing accuracy are repeatability and dwell accuracy.

Indexing accuracy

The indexing accuracy of the index drive indicates the difference between the target position and the actual position where the output shaft moves. The target position is defined with the angle from the reference station, and for each station, the target value is defined. Based on the max. and min. values obtained for each station, the indexing accuracy is calculated. Incidentally, the reference station is the position indicated in the dimensions of this catalog.
To measure the angle, an autocollimator or high precision angle encoder is used.
When an autocollimator is used, a polygon mirror (when index number is 6, hexagon mirror) which has a number of faces corresponding to the index number is mounted on the output shaft of the index drive. The autocollimator emits light towards the mirror and receives its reflection, and the angular misalignment is displayed. If the polygon is created with sufficient accuracy, the value will be the indexing accuracy of the index drive.

Measuring indexing accuracy using the autocollimator

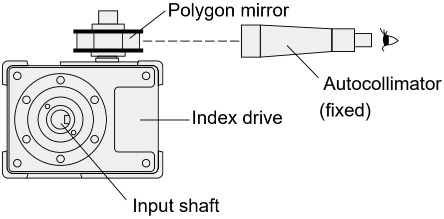

An example of the indexing accuracy measurement of the index drive

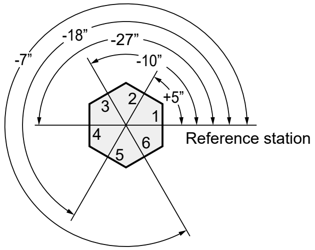

Measurement position	Measured values
1	0
2	+5”
3	-10”
4	-27”
5	-18”
6	-7”

Indexing accuracy
±16

An example of the indexing accuracy measurement of the Oscillator

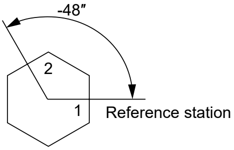

Measurement position	Measured values
1	0
2	-48

Indexing accuracy
±24″

Repeatability

Repeatability is the amount of variation that occurs in the results when measured repeatedly under the same conditions. The max. value of the variations is indicated in seconds (").

- Swing direction
  This accuracy represents repeatability of the positioning of each index. This is one of the typical features why the cam mechanism is evaluated to be highly reliable. Depending on the accuracy requirements of the machinery, you should choose either repeatability or indexing accuracy.
  For oscillators, indexing accuracy is not critical in most cases, while repeatability becomes critical.
- Lift direction
  This accuracy represents the repeatability of positioning at the upper and the lower ends. This is one of the typical features why the cam mechanism is evaluated to be highly reliable.

Dwell accuracy

Dwell accuracy represents the movement of the output shaft when the input shaft is turned within the dwell section of the cam.
As its name indicates, the dwell section is where the output shaft is stopped, but to be precise, it is not completely stopped. Due to errors of the components, it moves very slightly. The max. difference in movement is represented in secs.

Dwell accuracy example

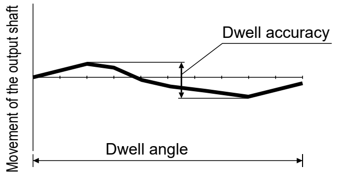

Dynamic indexing accuracy

Dynamic indexing accuracy represents the indexing accuracy when the machinery to which the installed index drive is operating. Therefore, for the automated machinery, the dynamic indexing accuracy determines the accuracy of the entire machinery.
Factors that affect the dynamic indexing accuracy of the index drive include the load to be used, rigidity, cam curve, the driving system of the input/output shaft, service life, static indexing accuracy, etc. When a system is designed, it is important to select the model, calculate the load and design the driving system while taking important factors from various perspectives into consideration.

Stroke accuracy

The stroke accuracy in the P&P drive represents the difference between the target stroke and the actual stroke.
As in Figure d, by measuring the stroke from the bottom end to the top end or from the top end to the bottom end, the stroke accuracy is obtained.

Stroke accuracy example

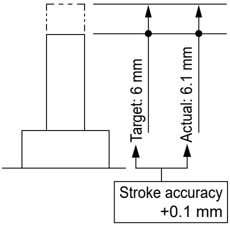

Accuracy of torque saver and torque guard

- Return accuracy
  This represents the displacement when reset after a release (trip).
- Variations of release (trip) torque
  This represents the range of variations of release torque.
  (For TGX, this represents the difference of neighboring trip torque variations when the trip is repeated.)
- Lost motion (torque saver)
  This represents the displacement from the original position when torque (T) is applied and is then released.
  Torque (T) = 1/2 of set torque

Calculating indexing accuracy

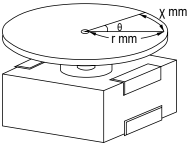

$$(\pm)\chi = 2\pi r \frac{(\pm)\theta}{360\times60\times60}$$
$$=0.00000485 \times r \times \theta$$

Angle θ Radius r	10"	20"	30"	60"	90"
100 mm	0.005	0.010	0.015	0.029	0.044
200 mm	0.010	0.019	0.029	0.058	0.087
300 mm	0.015	0.029	0.044	0.087	0.131

● References

Yo Makino, *Automated Machinery Mechanics*. 1976 Nikkan Kogyo Business & Technology Daily News.
Mechanical Engineering Handbook. 1986. Japan Society of Mechanical Engineers
JIS Z8203 International Unit System (SI) and how to use. 1985. Japan Standards Association.

● SIZING

Size selection C

How to determine the specifications and select the size

When you select specifications and model of the index drive, determine the following primary specifications first.

Work content	Operational conditions	Load conditions
Table drive Conveyer drive Oscillatior drive	Index number Index angle Cam curve Rotational speed of input shaft	Load capacity Outside table diameter Table supporting method External load

Taking service life and allowable max. table diameter into consideration, the selection should be finalized comparing the actual load torque applied to the output shaft with the dynamic rated output torque of the index drives when the index drive is operated under these conditions.

When the index drive is selected, the design of the index angle should be as large as possible, the table diameter as small as possible and the weight as light as possible from the start. Taking all these factors into consideration in designing may help you reduce the size of the index drives, which can contribute to saving space and costs.

Size selection flow chart

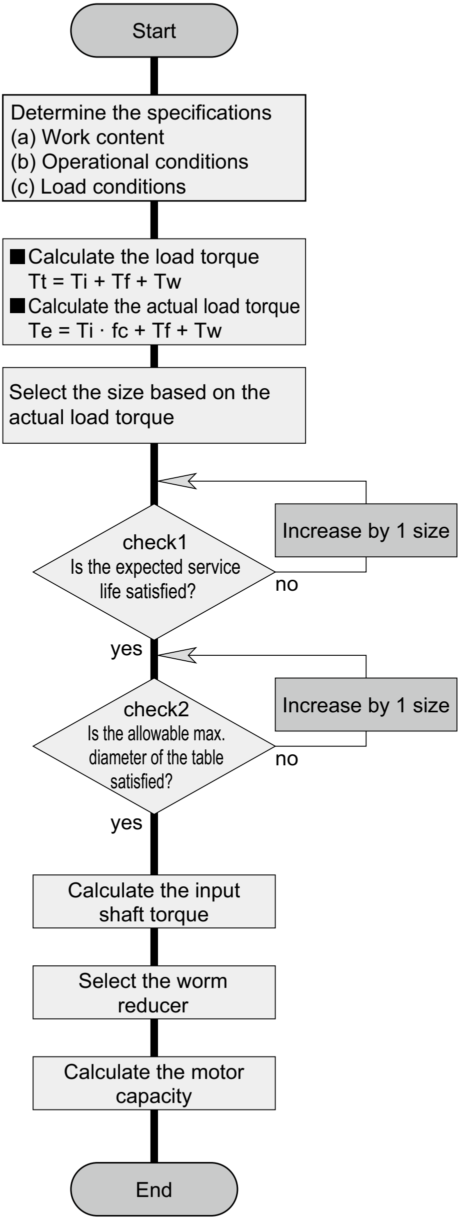

1. Calculating the load torque

a. Load torque for the standard timing

When the table or conveyor is driven, 3 different types of torque is applied to the output shaft of index drives: inertia torque, frictional torque and work torque. The total of these 3 is called the load torque.

$$Tt = Ti + Tf + Tw \ (N\cdot m)$$

Here, Tt : Load torque (N·m)
Ti : Inertial torque (N·m)
Tf : Frictional torque (N·m)
Tw : Work torque (N·m)

(1) Inertial torque: Ti

The inertial torque is the torque required to accelerate/decelerate the table, the jigs and the workpieces mounted on the output shaft during indexing.

The inertia torque can be obtained by multiplying the moment of inertia with the output shaft max. angular acceleration.

$$Ti = I \cdot \alpha \ (N\cdot m)$$

Here, I : Total moment of inertia ($kg\cdot m^2$)
α : Max. angular acceleration of the output shaft (rad/s^2)

(1)-1 Total moment of inertia: I

This indicates the total moment of inertia for various objects with the identical center of rotation. (Refer to the moment of inertia formulas.)

$$I = I_1 + I_2 + ... + In \ (kg\cdot m^2)$$

(1)-2 Max. angular acceleration of the output shaft: α

The max. output shaft angular acceleration can be obtained with a formula which consists of the non-dimensional max. acceleration Am of the cam curve, Index number n, index angle θh and input shaft rotational speed N.

● Index

$$\alpha = Am \cdot \frac{2\pi}{n} \left(\frac{360}{\theta h} \cdot \frac{N}{60} \right)^2 \ (rad/s^2)$$

Here, Am : non-dimensional max. acceleration of cam curve

Type of curve	MS modified sign curve	MC modified constant velocity curve	MT modified trapezoidal curve	TR trapecloid
Am	±5.53	±8.01	±4.89	±6.17

n : Index number
θh: Index angle (degrees)

$$\theta h = \frac{\theta t}{z}$$

θt : Total index angle (degrees)
N : Input shaft rotational speed (rpm)
z : Dwell No.

● Oscillator

$$\alpha = Am \cdot \frac{\pi \cdot \psi}{180} \cdot \left(\frac{360}{\theta h} \cdot \frac{N}{60} \right)^2 (rad/s^2)$$

Here, ψ : Oscillating angle (°)

(2) Frictional torque: Tf

The friction torque is the torque applied to the output shaft due to friction of the bearing and the sliding surfaces. Friction torque can be obtained using the following formula.

$Tf = \mu\cdot Ff\cdot Rf$ (N·m)
$Ff = mg$ (N)

Here, μ : Coefficient of friction

Rolling friction	Sliding friction
μ = 0.03 to 0.05	μ = 0.1 to 0.3

Ff : Force applied to a sliding surface and a bearing (N)
Rf : Average frictional radius (m)
m : Weight (kg)
g : Gravity acceleration (m/s^2)

How to determine the specifications and size selection

(3) Work torque: Tw

When the output shaft is in operation or when an external load acts on the output shaft as a load, the total of these is the work torque.
For example, when the output shaft is set up to be horizontal, the forces caused by the table (arm), the jigs and the workpieces as eccentric load are to be considered as the work torque.

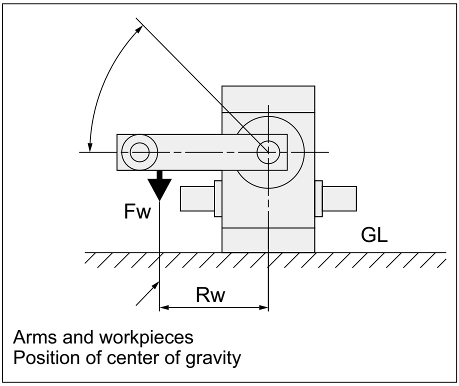

Work torque can be obtained using the following formula.

$$Tw = Fw \cdot Rw \ (N \cdot m)$$

Here, Fw : Force required for work (N)
Rw : Radius for work (m)

CAUTION: Compare the torque which is applied when the input shaft stops to the rated static output torque.

b. Load torque for the special timing

After obtaining load torque Tt for each index range, the max. value should be selected.

Example of special timing (index)

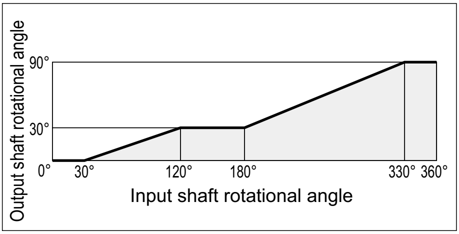

Example of special timing (oscillation)

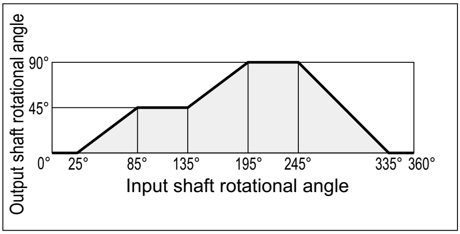

c. Load torque for indirect drive

When you make index units indirectly drive the unit to its output shaft using gears and/or sprockets, calculate the equivalent load torque considering the reduction ratios (io) of various torques.

(1) Equivalent inertial torque for the output shaft: Tie

$$Ie = I \cdot io^2 \ (kg \cdot m^2)$$

Here, Ie : Equivalent moment of inertia for the output shaft

$$Tie = Ie \cdot \alpha \ (N \cdot m)$$

(2) Equivalent frictional torque for the output shaft: Tfe

$$Tfe = Tf \cdot io \ (N \cdot m)$$

(3) Equivalent work torque for the output shaft: Twe

$$Twe = Tw \cdot io \ (N \cdot m)$$

2. Calculating the actual load torque: Te

The load torque mentioned above is the theoretical torque. The actual load torque applying to the output shaft of the index drive is greater than this because of the rigidity of the driving system, presence of backlash and the coupling method. Furthermore, how the unit is used critically affects it.
Hence, you should calculate the actual load torque taking the usage factor for your operational conditions which you have obtained from experience into consideration.

$$Te = Ti \cdot fc + Tf + Tw \ (\text{N·m})$$

Here, Te: Actual load torque (N·m)
fc : Usage factor

(Table C.1) Usage factors for various driving methods

Driving method		Reduction ratio of the reducer	
Output system	Input system	≤ 1/20 [1/10, 1/20]	> 1/20 [1/30,1/40 1/50, 1/60]
Table arm directly connected	Direct worm (1)	1.6	1.5
	Direct worm (2)	1.7	1.6
	Indirect worm	2.1	1.9
	Geared motor	3.7	3.7
	Geared motor (hypoid gear)	2.0(2.5)	2.0(2.5)
	Geared motor (helical worm gear)	1.6	1.5
Table indirect	Direct worm (1)	2.0	1.8
	Direct worm (2)	2.2	2.0
	Indirect worm	2.7	2.5
	Geared motor	4.7	4.7
	Geared motor (hypoid gear)	2.5(3.1)	2.5(3.1)
	Geared motor (helical worm gear)	2.0	1.8
Conveyer drive	Direct worm (1)	1.9	1.7
	Direct worm (2)	2.0	1.9
	Indirect worm	2.5	2.3
	Geared motor	4.4	4.4
	Geared motor (hypoid gear)	2.4(3.0)	2.4(3.0)
	Geared motor (helical worm gear)	1.9	1.7

Note: Figures in ( ) are for RGIB series.

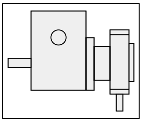

Direct worm (1)
Worm reducer is directly mounted on the housing.

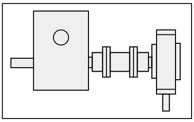

Direct worm (2)
Connected with a coupling.

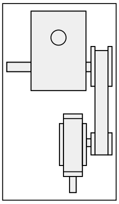

Indirect worm

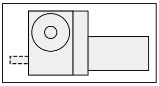

Geared motor

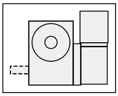

Geared motor
(Hypoid gear)/(Helical worm gear)

CAUTION: When a system is designed, make sure to give sufficient rigidity for the drive system from the motor to the input shaft of index drives minimizing backlash. This allows you to reduce the usage factors and helps you select the suitable index size.
Backlash in the system may cause vibration while the table is rotating, shortening the service life of the unit, and damaging the components.

(1) Avoid inserting a camshaft in series between the motor and the input shaft of the index drives. If it cannot be avoided, design the system taking the following factors into consideration.

- -1 Increase the rigidity of the cam shaft.
- -2 Select the connection method of min. backlash.
- -3 Select the motor capacity with sufficient margin.
- -4 Use a timing belt of high rigidity.

(2) When the input shaft of the index drives are connected directly to the output shaft of a reducer with a coupling, be sure to use a coupling of high rigidity which does not have backlash. Consideration should be given to making the center height adjustable.

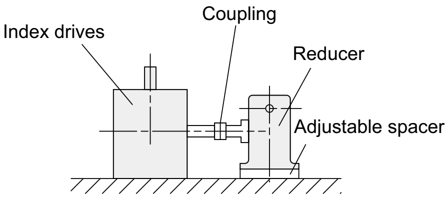

Example of a drive

How to determine the specifications and size selection

3. Size selection

Provisionally select the index drives based on the actual load torque Te and verify that this satisfies the expected service life and the allowable max. diameter of the outside table.

Check. 1 Service life: Lh

We design our products to have a service life of 10,000 hours based on the service life for rolling fatigue of the race surface of the cam follower at the input shaft rotational speed at the rated torque.
When you want service life longer than 10,000 hours, determine the required torque using the following formula taking the service life coefficient into consideration.

$$fh = \frac{Tr}{Te}$$

$$Lh = 10000 \cdot fh^{(10/3)}(h)$$

Here, Tr : Rated dynamic output torque (N·m)
fh : Service life coefficient
Lh: Service life hours (h)

Verify the service life is above the expected service life. If not, the size of the index drives should be increased.
Service life of repair parts such as oil seals depends on the Operational conditions, and it may not be satisfied in some cases.

(Table C.2) Service life and the coefficient of service life

Lh(h)	fh	Lh(h)	fh	Lh(h)	fh
10,000	1.000	25,000	1.316	60,000	1.712
12,000	1.056	30,000	1.390	70,000	1.793
14,000	1.106	35,000	1.456	80,000	1.866
16,000	1.151	40,000	1.516	90,000	1.933
18,000	1.193	45,000	1.570	100,000	1.995
20,000	1.231	50,000	1.621		

If the expected service life Lh is less than 10,000 hours, contact us.

If you choose the service life longer than necessary when you select a model, the size of the index drives will become large, which is uneconomical. Considering the actual time when the input shaft of the index drive is in operation, choose the most economical service life when you design the system.

Check. 2 Allowable max. diameter of the table: Dm

For the table drive, if the outside diameter of the table is large compared to the difference between the shafts of the index drives, a small impact may generate a force greater than the static torque of the index drives, leading to damage of the cam follower and the cam. This may also result in the increased residual vibration due to the outside diameter of the table being too large, and positioning will take too much time.
Based on our experience, the allowable diameter of the table where the index is mounted is calculated using the following formula as a guide. Note that this formula only applies to the standard unit. You should be careful when there is a factor which negatively affects the rigidity of the system such as an extended output shaft.

$$Dm \geq De$$

Here, Dm : Allowable max. diameter of the table (mm)

$$Dm = \frac{C \cdot ft}{io}$$

De: Max. diameter of the table (mm)
ft : Table coefficient (refer to Table C.3.)
C : Index drive size (Shaft interval) (mm)
io : Reduction ratio of the output shaft

(Table C.3) Formula for calculating the coefficient of table

Type	Formula	ft max. value
Compact	ft=1.5·fh+2.5	ft=7
Standard	ft=2.5·fh+2.5	ft=12 *1
Wide angle	ft=1.5·fh+1.5	ft=6
Table	ft=2·fh+4	ft=12 *1
Compact multi-index		
Flat		
Basic		

*1
- We recommend this to be used with $De \leq \frac{10/C}{io}$.

For the service life coefficient fh, refer to Table C.2.

[For using a parallel cam drive]

The parallel cam is easy to make because of its simple construction, but the rigidity will be low as the pressure angle at the dwell interval is high.
If the parallel cam is used to drive a table whose inertia load is large, residual vibration may be generated because of its low rigidity at the dwell interval. Residual vibration has a negative effect on the index accuracy, as well as on the service life of the index drives. In order to drive the table, we recommend the roller gear which has high rigidity at the dwell interval.
The driving method suitable for the parallel cam is the conveyor drive. The conveyor drive has the friction load in addition to the inertia load. Friction load suppresses residual vibration. Parallel cams with small index number can be manufactured, and a single indexing is offered as standard. Using the index drives of a small index number for conveyor drive allows large feed pitch motion. Using a gear reducer also reduces the load torque applied to the output shaft, which makes it possible to reduce the size of index drives. In addition, since the input and output shafts are arranged in parallel, this mechanism is suitable for conveyors.

4. Calculating the input shaft torque: Tc

The input shaft torque is the sum of the 1 required to drive the load which applies to index drives output shaft and the internal frictional torque. The former can be further divided into the inertia load torque and the friction/work load torque.

$$Tc=Tci+Tcw$$

Here, Tci : Input shaft torque (N·m) due to inertia load

Tcw : Input shaft torque due to frictional load (N·m)

$$Tci=\frac{\psi}{\theta h}\cdot Qm\cdot Ti$$

Here, ψ : Oscillating angle $\psi = \frac{360}{n}(°)$

θh : Index angle (degrees)

Qm: Torque coefficient

$$Tcw=\frac{\psi}{\theta h}\cdot Vm\cdot(Tf+Tw)+Tin$$

Here, Vm: Non-dimensional max. speed of cam curve

Tin : Internal frictional torque (N·m)

(Table C.4) Qm and Vm list

	MS modified sign curve	MC modified constant velocity curve	MT modified trapezoidal curve	TR trapecloid
Qm	±0.99	±0.72	±1.65	±1.76
Vm	1.76	1.28	2.00	2.18

CAUTION: The input shaft torque obtained here is the one required to drive the index drives itself. The torque must be calculated separately due to the external load.

How to determine the specifications and size selection

5. Selecting the worm reducer

Calculate the torque Ter of the output shaft of the reducer using the following formula. (when it is directly connected to the input shaft of the index drives)

$$Ter = Tc \times fr \ (N\cdot m)$$

Here, Ter : Load torque (N·m) of the reducer
Tc : Index input shaft torque
fr : Reducer usage factor
(Refer to Table C.5.)

Compare Ter obtained here in the worm reducer rated output torque table to verify that the reducer can be used combined with the index drives. If Ter is greater than the worm reducer rated output torque in the standard combination, the size of the reducer should be increased. For details (dimensions for mounting a reducer), contact us.

(Table C.5) Reducer usage factors: fr

	Operational hours per day		
	2 hours	10 hours	24 hours
Continuous operation	0.90	1.25	1.50
Intermittent operation	1.25	1.50	1.75

6. Calculating the motor capacity

(1) When the index drive is driven with a worm reducer

●Calculating the motor capacity: P
You can obtain the motor capacity for the index drives itself from the input shaft torque and input shaft rotational speed of the index drives.

$$P=\frac{Tc\cdot N}{9550\cdot\eta}(kW)$$

Here, P : Motor capacity (kw)
Tc: Input shaft torque (N·m)
N : Input shaft rotational speed (rpm)
η : Efficiency of the reducer (η < 1)
(Refer to "Section D: Reducer Specifications.")

●Calculating the actual motor capacity: Pe
The capacity calculated above is the peak value for index driving. The actual capacity is roughly half of the above generally required for the inertia torque. In addition, considering the motor capacity of the reducer unit, a value is added to the motor capacity of the index drive.

$$Pe = \frac{1}{2}\times \text{Motor capacity due to inert load}$$

$$+ \text{Motor capacity for frictional load}$$

$$+ \text{Motor capacity for reducer unit}$$

$$Pe = \frac{1}{2}\cdot\frac{Tci\cdot N}{9550\cdot\eta}+\frac{Tcw\cdot N}{9550\cdot\eta}+Pr$$

$$=\frac{N}{9550\cdot\eta}(\frac{1}{2}\cdot Tci+Tcw)+Pr(kW)$$

Here, Pe : Actual motor capacity (kW)
Pr : Motor capacity for the worm reducer unit itself (kW)

$$Pr=\frac{Tinr\cdot Nr}{9550}\ (kW)$$

Tinr: Internal frictional torque of the reducer (N·m)
(Refer to Table C.6.)
Nr : Worm shaft rotational speed (rpm)

Table C.6 indicates the relationship between the oil temperature of the reducer and its internal friction torque for each size. When we make calculations, we assume the oil temperature to be 10 degrees C unless otherwise requested.

(Table C.6) Internal frictional torque of the reducer: Tinr (N·m)

Reducer size		Oil temperature			
		5°C	10°C	15°C	20°C
HO	32	0.30	0.24	0.19	0.16
	40	0.53	0.42	0.34	0.29
	50	0.92	0.72	0.59	0.50
	60	1.5	1.1	0.93	0.79
	80	2.9	2.2	1.8	1.4
	100	4.0	3.1	2.5	2.0
	135	5.7	4.5	3.6	2.9
TE	35	0.38	0.33	0.29	0.26
	42	0.61	0.52	0.45	0.40
	51	1.25	1.00	0.85	0.72
	63	2.03	1.63	1.34	1.14
	80	3.56	2.72	2.19	1.83
	100	6.11	4.56	3.55	2.90
	150	10.6	7.96	6.15	4.95
CRG	25	1.96×10^{-2}			
	32	1.96×10^{-2}			

CAUTION: The following standard lubricating oil should be used.
HO reducer Bonnoc TS320
TE reducer Daphne Alpha Oil TE260
CRG reducer grease No. 2 (sealed)

CAUTION:

When you use a worm reducer other than the above, add to Pr the value obtained by converting the internal frictional torque given in the technical data into motor capacity.

In addition, since the viscosity of lubricating oil in the reducer becomes high in the cold climate region or during cold winter morning, higher motor capacity will become necessary. As a result, the motor capacity may become insufficient failing to obtain the expected speed. In the worst case, the motor may get stuck.

As you can see, select a motor with sufficient margin for the calculation.

(2) When the index drive is driven with a geared motor

●Calculating the actual motor capacity: Pe

When a motor drives a mechanism whose torque fluctuates significantly such as index drives, the motor may be driven reversely in the deceleration range.

Furthermore, compared to the worm reducer, the geared motor has larger backlash, creating a situation where it will be directly affected by this. Hence, the peak value for index drive is taken as the actual motor capacity Pe.

Pe = Motor capacity due to inert load
+ Motor capacity for frictional load

$$Pe=\frac{Tci\cdot N}{9550\cdot\eta}+\frac{Tcw\cdot N}{9550\cdot\eta}$$

$$=\frac{N}{9550\cdot\eta}(Tci+Tcw)\ (kW)$$

Here, Pe : Actual motor capacity (kW)

CAUTION:

Some manufacturers of geared motors indicate the rated torque of the gear head. You should verify that the selected motor frame number satisfies the following conditions.

$$\begin{array}{ccc} \text{Index drives} & & \text{Gear head} \\ \text{Input shaft torque} & < & \text{Rated torque} \end{array}$$

How to determine the specifications and size selection

7. Selecting the hollow shaft geared motor

(1) Verify the motor power (Pm) in the characteristics table for the selected index drives to confirm that it exceeds the motor capacity (Pe) obtained in 6.

$Pm \geq Pe$

(2) Select the input shaft rotational speed (N) from the output shaft rotational speed (Nrs) in the characteristics table to determine the reduction ratio (ir).
When you control the unit with an inverter, select the reduction ratio (ir) so that the specified rotational speed is obtained with the setup frequency of the inverter to be 40-60 Hz for continuous operation.

(3) Verify that the allowable output torque (Trr) of the geared motor exceeds the geared motor load torque (Ter).

$Trr \geq Ter$

$Ter = Tc \times fr$

fr: Factor when geared motor is used

(Table C.7) Usage factor for geared motor: fr

Motor type	Operation	Operational hours per day		
		2 hours	10 hours	24 hours
Hypoid gear	Continuous	1.30		1.75
	Intermittent			
Helical worm gear	Continuous	0.90	1.25	1.50
	Intermittent	1.25	1.50	1.75

8. Selecting the inverter

When the inverter controls the starting/stopping of the index drive, a suitable inverter should be chosen for the task.
Referring to the catalog of the chosen inverter, verify its capacity.
If the capacity is satisfied, any inverter can be used irrespective of manufacturer and model.

(1) Calculating the required capacity of the inverter

Capacity required for starting/stopping the motor: Pinv

-1 Motor braking time: td

It is required that the total of the braking time required for starting and that required for stopping should be within the dwell time (t_2).

$$t_2 = \frac{60}{N} \times \frac{360-\theta h}{360} \text{ (s)}$$

t_2: Index drives dwell time (s)

$td \leqq \frac{1}{2} t_2$ td : Motor braking time (s) required for starting/stopping

Or when sensor signals are taken out using a detection cam on the input shaft of index drives

Within the braking angle determined by the braking time, the adjusting angle required for the detection cam should be 50% of it.

$td \leq \frac{1}{4} t_2$

Note: The braking time (td) is assumed to be the min. of 0.1 sec.

(2) Converted moment of inertia for the motor shaft: JMc

$$JMc=\frac{Ic}{ir^2}+JM\ (kg\cdot m^2)$$

JMc: Converted moment of inertia for the motor shaft ($kg\cdot m^2$)
JM : Moment of inertia of the motor ($kg\cdot m^2$)
ir : Reduction ratio
Ic : Moment of inertia of the input shaft ($kg\cdot m^2$)

Note: For Ic, refer to the Characteristics table of individual models.

(3) Required capacity of the inverter: Pinv

$$Pinv=\frac{JMc\cdot Nms^2}{91190\cdot td}\ (kW)$$

Pinv: Required capacity of the inverter (kW)
Nms: Motor speed (rpm)

(2) Selection of the inverter

-1 Select the inverter whose capacity is greater than the required capacity of inverter (Pinv) obtained with the motor output (Pm) in the Characteristics table and calculation.

Inverter capacity ≥ Pm or Pinv

Note1: About braking time (td)
When you set up braking time (td) to be 0.1 sec. or less, the capacity of the geared motor may not be sufficient.
If you want the specification of 0.1 sec. or less, you should re-select the geared motor. Contact CKD if necessary.

Note2: About starting and stopping
Be sure to make the Index drives start and stop within the dwell range. If it is unavoidable to make it stop/start while rotating, allow enough braking time.

Example of calculating the table drive (direct drive)

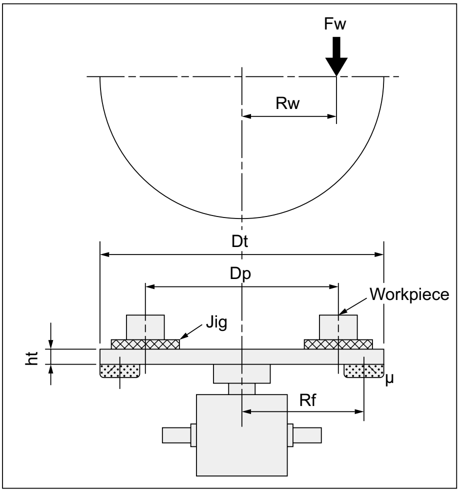

Selection conditions

(1) Model: RGIS

(2) Shape of the output shaft: flange

(3) Index number: n = 6

(4) Input shaft rotates intermittently

(5) Machine cycle time: tm = 5 s

(6) Movement time (index time): t_1 = 0.6 s

(7) Index angle: θh = 270 degrees

(8) Unit cycle time: t_0

$$t_0=0.6\times\frac{360}{270}=0.8\text{ s}$$

(9) Input shaft rotational speed: N

$$N=\frac{60}{0.8}=75\text{ rpm}$$

(10) Cam curve: MS modified sign curve

(11) Table diameter: Dt = 300 mm

(12) Table thickness: ht = 20 mm

(13) Material of table:
Steel (Material density ρ = 7.86 g/cm^3)

(14) Number of workpieces: nw = 2

(15) Total weight of workpieces: m_2 = 1.5 kg × 2 = 3 kg

(16) Number of jigs: np = 6

(17) Total weight of jigs: m_3 = 6 kg × 6 = 36 kg

(18) Diameter of jigs and workpieces mounting center: Dp = 250 mm

(19) With a support underneath the table and roller bearing
μ=0.03

(20) Average frictional radius: Rf = 125 mm

(21) Force required for work (external load 1 kgf)
Fw=1×9.81=9.81N

(22) Radius for work: Rw = 125 mm

(23) When index drive is driven with a worm reducer

(24) Index drives should be installed in Position #1

(25) Material of housing: Fc

(26) The cam of index drive is spiraled in the left direction (standard)

(27) Expected service life: 12000 hours
Select the size for the above conditions.

CAUTION:

You should distinguish the cycle time of the index drives and that of the machine.

● Unit cycle time: t_0 (s)

$$t_0=t_1+t_2=\frac{60}{N\times z}$$

Here, t_1 : Index time (s)
t_2 : Dwell time (s)
N: Input shaft rotational speed (rpm)
z : Dwell No.

● Machine cycle time: tm (s)

$$tm=t_0+ts$$

Here, t_0 : Unit cycle time (s)
ts: Stop time (s) (input shaft stop time)

In addition, when the input shaft operates intermittently, a large index angle is generally chosen.

Size selection

1. Calculating the load torque: Tt

● Calculating the weight which is a load

Weight of the table

$$m_1=\frac{\pi}{4}\cdot Dt^2\cdot ht\cdot\rho\cdot 10^{-6}$$

$$=\frac{\pi}{4}\times 300^2\times 20\times 7.86\times 10^{-6}$$

$$=11.1\ \text{kg}$$

(1) Inertial torque: Ti

(1)-1 Total moment of inertia

Moment of inertia of the table

$$I_1=\frac{m_1\cdot R^2}{2}=\frac{11.1\times 0.15^2}{2}=0.125\ \text{kg}\cdot\text{m}^2$$

Moment of inertia of the workpieces

$$I_2=m_2\cdot Re^2=3\times 0.125^2=0.0469\ \text{kg}\cdot\text{m}^2$$

Moment of inertia of the jigs

$$I_3=m_3\cdot Re^2=36\times 0.125^2=0.563\ \text{kg}\cdot\text{m}^2$$

● Total moment of inertia

$$I=I_1+I_2+I_3=0.125+0.0469+0.563$$

$$=0.735\ \text{kg}\cdot\text{m}^2$$

(1)-2 Max. angular acceleration of the output shaft

$$\alpha=Am\cdot\frac{2\pi}{n}\cdot\left(\frac{360}{\theta h}\cdot\frac{N}{60}\right)^2$$

$$=5.53\times\frac{2\pi}{6}\times\left(\frac{360}{270}\times\frac{75}{60}\right)^2$$

$$=16.1\ \text{rad/s}^2$$

● Thus, the inertial torque is;

$$Ti=I\cdot\alpha$$

$$=0.735\times 16.1$$

$$=11.8\ \text{N}\cdot\text{m}$$

(2) Frictional torque: Tf

● Calculating the force applied to a sliding surface and a bearing

$$Ff=m\cdot g$$

$$=(11.1+3+36)\times 9.81$$

$$=491\ \text{N}$$

● Calculating the frictional torque

$$Tf=\mu\cdot Ff\cdot Rf$$

$$=0.03\times 491\times 0.125$$

$$=1.84\ \text{N}\cdot\text{m}$$

(3) Work torque: Tw

$$Tw=Fw\cdot Rw$$

$$=9.81\times 0.125$$

$$=1.23\ \text{N}\cdot\text{m}$$

(4) Load torque: Tt

$$Tt=Ti+Tf+Tw$$

$$=11.8+1.84+1.23$$

$$=14.9\ \text{N}\cdot\text{m}$$

2. Calculating the actual load torque: Te

● Determine the usage factors

fc=1.6

(Refer to Table C.1. Usage factors for various driving methods.)

● Actual load torque

$$Te=Ti\cdot fc+Tf+Tw$$

$$=11.8\times 1.6+1.84+1.23$$

$$=22.0\ \text{N}\cdot\text{m}$$

Example of calculating the table drive (direct drive)

3. Index drive size selection

You can find the index drives which rated output torque satisfies the actual load torque of Te = 22.0 N·m to be RGIS040 or greater in the rated output torque table. Provisionally select RGIS040 (Tr = 26.1 N·m, C = 40) and verify that this satisfies all the conditions.

Check. 1 Service life: Lh

Service life coefficient: fh

$$fh = \frac{Tr}{Te} = \frac{26.1}{22.0} = 1.19$$

$$Lh = 10000 \cdot fh^{(10/3)}$$
$$= 10000 \times 1.19^{(10/3)}$$
$$= 17900\ h$$

Hence, this satisfies the expected service life (12000 hours).

Check. 2 Allowable max. diameter of the table: Dm

Table coefficient: ft

$$fh < 3$$
$$ft = 2.5 \cdot fh + 2.5$$
$$= 2.5 \times 1.19 + 2.5$$
$$= 5.48$$
$$Dm = C \cdot ft$$
$$= 40 \times 5.48$$
$$= 219\ mm$$

Hence, this does not satisfy Dm ≥ Dt = 300 mm. Here, you should reselect the drive to a 1 step larger in size, RGIS050 (Tr = 43.1 N·m, C = 50).

Check. 1 Service life: Lh

Service life coefficient: fh

$$fh = \frac{Tr}{Te} = \frac{43.1}{22.0} = 1.96$$

$$Lh = 10000 \cdot fh^{(10/3)}$$
$$= 94200\ h$$

Hence, this satisfies the expected service life (12000 hours).

Check. 2 Allowable max. diameter of the table: Dm

Table coefficient: ft

$$ft = 2.5 \cdot fh + 2.5$$
$$= 7.4$$
$$Dm = C \cdot ft$$
$$= 50 \times 7.4$$
$$= 370\ mm$$

Hence, this satisfies Dm ≥ Dt = 300 mm.

Based on the above, RGIS050-006270S1F1 is chosen.

4. Calculating the input shaft torque: Tc

$$Tc = Tci + Tcw$$

$$Tci = \frac{\Psi}{\theta h} \cdot Qm \cdot Ti$$

$$Tcw = \frac{\Psi}{\theta h} \cdot Vm \cdot (Tf + Tw) + Tin$$

For the internal frictional torque Tin, refer to the characteristics table in the catalog.

$$Tci = \frac{60}{270} \times 0.99 \times 11.8$$
$$= 2.6\ N \cdot m$$

$$Tcw = \frac{60}{270} \times 1.76 \times (1.84 + 1.23) + 3.0$$
$$= 4.2\ N \cdot m$$

$$Tc = 2.6 + 4.2$$
$$= 6.8\ N \cdot m$$

5. Selecting the worm reducer (HO series)

● Determine the reducer usage factors. (Table C.5)

fr=1.5

(Continuous operation: Operation exceeding 10 hours per day)

● Calculate a torque Ter of the output shaft of HO reducer.

$$\begin{aligned} Ter &= Tc \cdot fr \\ &= 6.8 \times 1.5 \\ &= 10.2 \text{ N·m} \end{aligned}$$

Verify Ter obtained here to be within the dynamic rated output torque Trr of the standard combination reducer.
The standard HO reducer for RGIS050 is HO32.
The reduction ratio required for 75 rpm of the input shaft rotational speed is 1/20 for 60 Hz.
Worm shaft rotational speed: Nr = 75 × 20 = 1500 rpm. Thus, calculate the dynamic rated output torque Trr when the worm shaft rotational speed of HO32-1/20 is 1500 rpm.

Trr=16 N·m
This is acceptable because Trr ≥ Ter.

Since the operation is intermittent for this specification, the clutch and brake are required. Hence, the reducer HO32-1/20 with C/B is chosen.

6. Calculating the motor capacity: P

When index drive is driven with a worm reducer (HO series), calculate the motor capacity.

● Calculating the actual motor capacity: Pe
To calculate the internal frictional torque of the worm reducer, suppose the oil temperature to be 10°C.

Tinr=0.24 N·m

(Refer to Table C.6. Internal frictional torque of the HO reducer.)

$$Pr = \frac{Tinr \cdot Nr}{9550} = \frac{0.24 \times 1500}{9550} = 0.038 \text{ kW}$$

$$Pe = \frac{N}{9550 \times \eta}\left(\frac{1}{2} \times Tci + Tcw\right) + Pr$$

$$= \frac{75}{9550 \times 0.68}\left(\frac{1}{2} \times 2.6 + 4.2\right) + 0.038$$

$$= 0.102 \text{ kW}$$

Hence, the motor whose capacity is 0.102 kW or greater should be chosen.

Example of calculating the table drive (indirect drive)

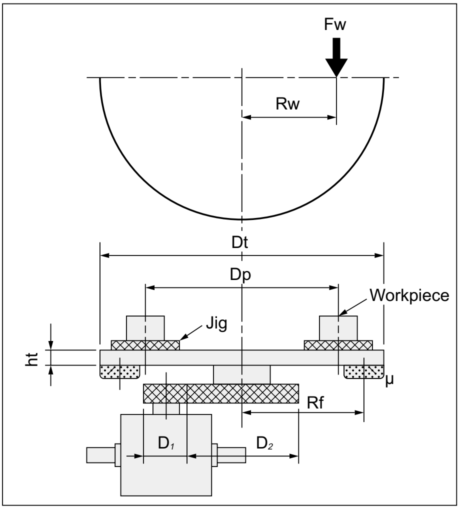

Selection conditions

(1) Model: RGIS

(2) Shape of the output shaft: straight

(3) Number of stations: ns = 6

(4) Input shaft rotates intermittently

(5) Machine cycle time: tm = 6 s

(6) Movement time (indexing time): t_1 = 1.5 s

(7) Index angle: θh = 300 degrees

(8) Unit cycle time: t_0

$$t_0=1.5\times\frac{360}{300}=1.8\text{ s}$$

(9) Input shaft rotational speed: N

$$N=\frac{60}{1.8}=33.3\text{ rpm}$$

(10) Cam curve: MS modified sign curve

(11) Table diameter: Dt = 1200 mm

(12) Table thickness: ht = 25 mm

(13) Material of table: aluminum
(Material density ρ = 2.7 g/cm^3)

(14) Number of workpieces: nw = 6

(15) Total weight of workpieces: m_2 = 10 kg × 6 = 60 kg

(16) Number of jigs: np = 6

(17) Total weight of jigs: m_3 = 30 kg × 6 = 180 kg

(18) Diameter of jigs and workpieces mounting center: Dp = 1000 mm

(19) Gear on the table side:
Weight … m_4 = 45 kg
Number of teeth … Z_2 = 180
Pitch circle diameter … D_2 = 540 mm

(20) Index drives output shaft gear:
Weight … m_5= 5 kg
Number of teeth … Z_1 = 60
Pitch circle diameter … D_1 = 180 mm

(21) Reduction ratio of the output shaft:

$$io=\frac{Z_1}{Z_2}=\frac{60}{180}=\frac{1}{3}$$

(22) Index number:

$$n=ns\cdot io=6\times\frac{1}{3}=2$$

(23) With a support underneath the table.
Roller bearing μ = 0.03

(24) Average frictional radius: Rf = 500 mm

(25) Suppose there is no force required for operation.

(26) When index drive is driven with a worm reducer.

(27) Index drives should be installed in Position #1.

(28) Material of housing: FC

(29) The cam of the index drive is spiraled in the left direction (standard).

(30) Expected service life: 10000 hours

Select the size for the above conditions.

Size selection

1. Calculating the equivalent load torque: Tte

(1) Equivalent inertial torque for the output shaft: Tie

● Calculating the weight which is a load

Weight of the table

$$m_1=\frac{\pi}{4}\cdot Dt^2\cdot ht\cdot \rho\cdot 10^{-6}$$

$$=\frac{\pi}{4}\times 1200^2\times 25\times 2.7\times 10^{-6}$$

$$=76.3\ \text{kg}$$

(1)-1 Calculating moment of inertia

Moment of inertia of the table

$$I_1=\frac{m_1\cdot R^2}{2}=\frac{76.3\times 0.6^2}{2}=13.7\ \text{kg}\cdot\text{m}^2$$

Moment of inertia of the jigs

$$I_2=m_3\cdot Re^2\cdot 180\times 0.5^2\cdot 45.0\ \text{kg}\cdot\text{m}^2$$

Moment of inertia of the workpieces

$$I_3=m_2\cdot Re^2=60\times 0.5^2=15.0\ \text{kg}\cdot\text{m}^2$$

Moment of inertia of the gear on the table side

$$I_4=\frac{m_4\cdot R^2}{2}=\frac{45.0\times 0.27^2}{2}=1.64\ \text{kg}\cdot\text{m}^2$$

Moment of inertia of the index drives output shaft gear:

$$I_5=\frac{m_5\cdot R^2}{2}=\frac{5.0\times 0.09^2}{2}=0.0203\ \text{kg}\cdot\text{m}^2$$

● Equivalent inertial torque for the output shaft

$$Ie=(I_1+I_2+I_3+I_4)\cdot io^2+I_5$$

$$=(13.7+45.0+15.0+1.64)\times\left(\frac{1}{3}\right)^2$$

$$+0.0203$$

$$= 8.39$$

(1)-2 Calculating the max. angular acceleration of the output shaft

$$\alpha=Am\cdot\frac{2\pi}{n}\cdot\left(\frac{360}{\theta h}\cdot\frac{N}{60}\right)^2$$

$$=5.53\times\frac{2\pi}{2}\times\left(\frac{360}{300}\times\frac{33.3}{60}\right)^2$$

$$=7.71\ \text{rad/s}^2$$

● Calculating the equivalent inertial torque for the output shaft

$Tie=Ie\cdot\alpha=8.39\times 7.71=64.7$ N·m

(2) Equivalent frictional torque for the output shaft: Tfe

● Calculating the force applied to a sliding surface and bearing

$$Ff=m\cdot g$$

$$=(76.3+180+60+45)\times 9.81$$

$$=3540\ \text{N}$$

● Calculating the frictional torque

$$Tf=\mu\cdot Ff\cdot Rf$$

$$=0.03\times 3540\times 0.5$$

$$=53.1\ \text{N}\cdot\text{m}$$

● Calculating the equivalent frictional torque for the output shaft

$$Tfe=Tf\cdot io$$

$$=53.1\times\frac{1}{3}$$

$$=17.7\ \text{N}\cdot\text{m}$$

(3) Equivalent work torque for the output shaft: Twe

Since no force is required for work, the equivalent work torque Twe is zero.

(4) Equivalent load torque: Tte

$$Tte=Tie+Tfe+Twe$$

$$=64.7+17.7+0$$

$$=82.4\ \text{N}\cdot\text{m}$$

2. Actual load torque: Te

● Determine the usage factors

$$fc=1.8$$

(Refer to Table C.1. Usage factors for various driving methods.)

● Actual load torque

$$Te=Tie\times 1.8+Tfe+Twe$$

$$=134\ \text{N}\cdot\text{m}$$

Example of calculating the table drive (indirect drive)

3. Index drive size selection

You can find the index drives which rated output torque satisfies the actual load torque of Te = 134 N·m to be RGIS110 or greater in the rated output torque table. Provisionally select RGIS110 (Tr = 265 N·m, C = 110) and verify that this satisfies all the conditions.

Check. 1 Service life: Lh

Service life coefficient: fh

$$fh = \frac{Tr}{Te} = \frac{265}{134} = 1.98$$

$$Lh = 10000 \cdot fh^{(10/3)}$$
$$= 10000 \times 1.98^{(10/3)}$$
$$= 97500 \text{ h}$$

Hence, this satisfies the expected service life (10000 hours).

Check. 2 Allowable max. diameter of the table: Dm

Table coefficient: ft

$$ft = 2.5 \cdot fh + 2.5$$
$$= 2.5 \times 1.98 + 2.5$$
$$= 7.45$$

$$Dm = \frac{C \cdot ft}{io}$$

$$= \frac{110 \times 7.45}{\frac{1}{3}}$$

$$= 2460 \text{ mm}$$

Hence, this satisfies Dm ≥ Dt = 1200 mm.

Based on the above, RGIS110-002300S1S1 is chosen.

4. Calculating the input shaft torque: Tc

$$Tc = Tci + Tcw$$

$$Tci = \frac{\Psi}{\theta h} \cdot Qm \cdot Tie$$

$$Tcw = \frac{\Psi}{\theta h} \cdot Vm \cdot (Tfe + Twe) + Tin$$

For the internal frictional torque Tin, refer to the characteristics table in the catalog.

$$Tci = \frac{180}{300} \times 0.99 \times 64.7$$
$$= 38.4 \text{ N·m}$$

$$Tcw = \frac{180}{300} \times 1.76 \times (17.7 + 0) + 15$$
$$= 33.7 \text{ N·m}$$

$$Tc = 38.4 + 33.7$$
$$= 72.1 \text{ N·m}$$

5. Selecting the worm reducer (HO series)

● Determine the reducer usage factors. (Table C.5)

fr=1.5

(Continuous operation: Operation exceeding 10 hours per day)

● Calculate a torque Ter of the output shaft of HO reducer.

$$\begin{aligned} Ter &= Tc \cdot fr \\ &= 72.1 \times 1.5 \\ &= 108 \text{ N·m} \end{aligned}$$

Verify Ter obtained here to be within the rated torque Trr of the standard combination reducer. The standard HO reducer for RGIS110 is HO60. The reduction ratio required for 33.3 rpm of the input shaft rotational speed is 1/40 for 60 Hz. Worm shaft rotational speed: Nr = 33.3 × 40 = 1332 rpm. Thus, calculate the dynamic rated output torque Trr when the worm shaft rotational speed of HO60 is 1332 rpm.

Trr=108 N·m

This is acceptable because Trr ≥ Ter.

Since the operation is intermittent for this specification, the clutch and brake are required. Hence, the reducer HO60-1/40 with C/B is chosen.

6. Calculating the motor capacity: P

When index drive is driven with a worm reducer (HO series), calculate the motor capacity.

● Calculating the actual motor capacity: Pe

To calculate the internal frictional torque of the worm reducer, suppose the oil temperature to be 10°C.

Tinr=1.1 N·m

(Refer to Table C.6. Internal frictional torque of the HO reducer.)

$$Pr = \frac{Tinr \cdot Nr}{9550} = \frac{1.1 \times 1332}{9550} = 0.15 \text{ kW}$$

$$Pe = \frac{N}{9550 \times \eta}\left(\frac{1}{2} \times Tci + Tcw\right) + Pr$$

$$= \frac{33.3}{9550 \times 0.6}\left(\frac{1}{2} \times 38.4 + 33.7\right) + 0.15$$

$$= 0.457 \text{ kW}$$

Hence, the motor whose capacity is 0.457 kW or greater should be chosen.

Example of calculating the oscillator drive

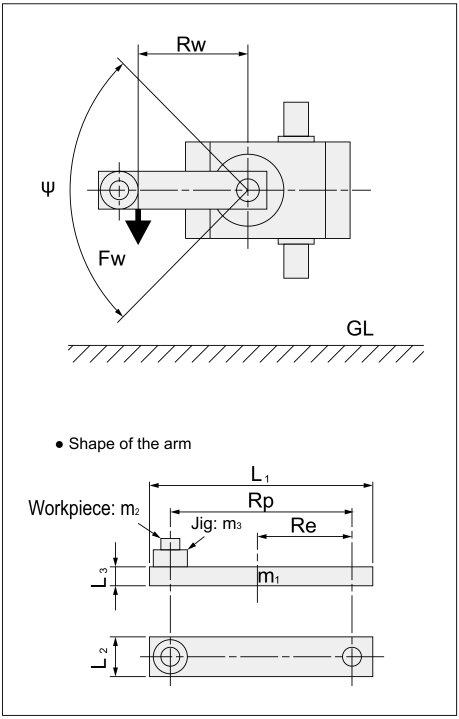

Selection conditions

(1) Model: RGOL

(2) Shape of the output shaft: straight

(3) Oscillating angle: ψ = 90 degrees

(4) Input shaft rotates continuously

(5) Unit cycle time: t_0

$$t_0=1\ \text{s}$$

(6) Total index angle: θt = 120 degrees

(7) Index angle: θh

$$\theta h=\frac{\theta t}{z}=\frac{120}{2}=60°$$

Note: For the oscillation drive of the standard specification, the number of dwell points is 2.

(8) Movement time (indexing time): t_1

$$t_1=1\times\frac{60}{360}=0.167\ \text{s}$$

Note: Time required to oscillate the output shaft for 90 degrees

(9) Input shaft rotational speed

$$N=\frac{60}{1}=60\ \text{rpm}$$

(10) Cam curve: MS modified sign curve

(11) Shape of the arm

Total length of the arm: L_1 = 200 mm

Arm width: L_2 = 40 mm

Arm thickness: L_3 = 20 mm

Weigh of the arm: m_1 = 1.3 kg

Amount of eccentricity of the arm: Re = 70 mm

(12) Weight of workpiece: m_2 = 0.5 kg

(13) Weight of jig: m_3 = 1.5 kg

(14) Workpiece and jig mounting radius: Rp = 150 mm

(15) Suppose there is no load due to friction.

(16) Installation of index drives should be Position #3.

(17) Since the installation is of Position #3, the weights of the arm, the jig and the workpiece all add as eccentric load to the force required for operation. Suppose there is no other force required for operation.

(18) When index drive is driven with a worm reducer.

(19) Orbit pattern should be T.

(20) Expected service life: 10000 hours

(21) Timing chart (standard)

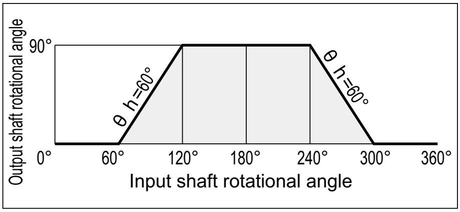

Select the model suitable for the above conditions.

Size selection

1. Calculating the load torque: Tt

(1) Inertial torque: Ti

(1)-1 Calculating moment of inertia

Moment of inertia of the arm

$$I_1=m_1\cdot\left(\frac{L_1^2+L_2^2}{12}+Re^2\right)$$

$$= 1.3 \times \left(\frac{0.2^2+0.04^2}{12}+0.07^2\right)$$

$$= 0.0109 \text{ kg}\cdot\text{m}^2$$

Moment of inertia of the workpieces

$I_2=m_2\cdot Rp^2=0.5\times0.15^2=0.0113 \text{ kg}\cdot\text{m}^2$

Moment of inertia of the jigs

$I_3=m_3\cdot Rp^2=1.5\times0.15^2=0.0338 \text{ kg}\cdot\text{m}^2$

● Total moment of inertia

$$I=I_1+I_2+I_3$$

$$= 0.0109 + 0.0113 + 0.0338$$

$$= 0.056 \text{ kg}\cdot\text{m}^2$$

(1)-2 Calculating the max. angular acceleration of the output shaft

$$\alpha=Am\cdot\frac{\pi\cdot\psi}{180}\cdot\left(\frac{360}{\theta h}\cdot\frac{N}{60}\right)^2$$

$$=5.53\times\frac{\pi\times90}{180}\times\left(\frac{360}{60}\times\frac{60}{60}\right)^2$$

$$=313 \text{ rad/s}^2$$

● Calculating the inertial torque

$$Ti=I\cdot\alpha$$

$$=0.056\times313$$

$$=17.5 \text{ N}\cdot\text{m}$$

(2) Frictional torque: Tf

Since no frictional load exists, the frictional torque Tf is zero.

(3) Work torque: Tw

As described before, when the orientation is #3, the arm and the jigs become the eccentric load acting as work torque.

● Work torque due to eccentric load on the arm: Tw_1

Force required for work

$Fw_1=1.3\times9.81=12.8\text{N}$

Radius for work

$Re=0.07$

$\therefore Tw_1 = Fw_1\cdot Re = 12.8 \times 0.07$

$= 0.896 \text{ N}\cdot\text{m}$

● Work torque due to eccentric load of the jigs and workpieces: Tw_2

Force required for work

$Fw_2=(1.5+0.5)\times9.81$

$=19.6 \text{ N}$

Radius for work

$Rp=0.15 \text{ m}$

$\therefore Tw_2 = Fw_2\cdot Rp = 19.6 \times 0.15$

$= 2.94 \text{ N}\cdot\text{m}$

Hence, the total work torque

$Tw=Tw_1+Tw_2=0.896\times2.94$

$=3.84 \text{ N}\cdot\text{m}$

(4) Load torque: Tt

$Tt=Ti+Tf+Tw=17.5+0+3.84$

$=21.3 \text{ N}\cdot\text{m}$

2. Calculating the actual load torque: Te

● Determine the usage factors

$fc=1.6$

(Refer to Table C.1. Usage factors for various driving methods.)

● Actual load torque

$$Te=Ti\cdot fc+Tf+Tw$$

$$=17.5\times1.6+0+3.84$$

$$=31.8 \text{ N}\cdot\text{m}$$

Example of calculating the oscillator drive

3. Index drives size selection

You can find the index drives which rated output torque satisfies the actual load torque of Te = 31.8 N·m to be RGOL140 or greater in the rated output torque table. Provisionally select RGOL140 (Tr = 45.9 N·m, C = 140) and verify that this satisfies all the conditions.

Check. 1 Service life: Lh

Service life coefficient: fh

$$fh = \frac{Tr}{Te} = \frac{45.9}{31.8} = 1.44$$

$$Lh = 10000 \cdot fh^{(10/3)}$$
$$= 10000 \times 1.44^{(10/3)}$$
$$= 33700 \text{ h}$$

Hence, this satisfies the expected service life (10000 hours).

Check. 2 Allowable max. diameter of the table: Dm

Table coefficient: ft

$$ft = 1.5 \cdot fh + 1.5$$
$$= 1.5 \times 1.44 + 1.5$$
$$= 3.66$$

Max. diameter of the table (assumed)

$$De = L_1 + Re \times 2 = 200 + 70 \times 2 = 340 \text{ mm}$$

$$Dm = C \cdot ft$$
$$= 140 \times 3.66$$
$$= 512 \text{ mm}$$

Hence, this satisfies Dm ≥ De = 340 mm.

Based on the above, RGOL140-090120STS3 is chosen.

4. Calculating the input shaft torque: Tc

$$Tc = Tci + Tcw$$

$$Tci = \frac{\Psi}{\theta h} \cdot Qm \cdot Ti$$

$$Tcw = \frac{\Psi}{\theta h} \cdot Vm \cdot (Tf + Tw) + Tin$$

For the internal frictional torque Tin, refer to the characteristics table in the catalog.

$$Tci = \frac{90}{60} \times 0.99 \times 17.5$$
$$= 26.0 \text{ N·m}$$

$$Tcw = \frac{90}{60} \times 1.76 \times (0 + 3.84) + 29$$
$$= 39.1 \text{ N·m}$$

$$Tc = 26.0 + 39.1$$
$$= 65.1 \text{ N·m}$$

5. Selecting the worm reducer (HO series)

● Determine the reducer usage factors. (Table C.5)

fr=1.5

(Continuous operation: Operation exceeding 10 hours per day)

● Calculate a torque Ter of the output shaft of HO reducer.

$$\begin{aligned} Ter &= Tc \cdot fr \\ &= 65.1 \times 1.5 \\ &= 97.7 \text{ N·m} \end{aligned}$$

Verify Ter obtained here to be within the rated torque Trr of the standard combination reducer. The standard HO reducer for RGOL140 is HO60. The reduction ratio required for 60 rpm of the input shaft rotational speed is 1/20 for 60 Hz. Worm shaft rotational speed: Nr = 60 × 20 = 1200 rpm. Thus, calculate the dynamic rated output torque Trr when the worm shaft rotational speed of HO60 is 1200 rpm.

Trr=105 N·m

This is acceptable because Trr ≥ Ter.

Since the operation is intermittent for this specification, the clutch and brake are required. Hence, the reducer HO60-1/20 with C/B is chosen.

6. Calculating the motor capacity: P

When index drive is driven with a worm reducer (HO series), calculate the motor capacity.

● Calculating the actual motor capacity: Pe

To calculate the internal frictional torque of the worm reducer, suppose the oil temperature to be 10°C.

Tinr=1.1 N·m

(Refer to Table C.6. Internal frictional torque of the HO reducer.)

$$Pr = \frac{Tinr \cdot Nr}{9550} = \frac{1.1 \times 1200}{9550} = 0.14 \text{ kW}$$

$$Pe = \frac{N}{9550 \times \eta}\left(\frac{1}{2} \times Tci + Tcw\right) + Pr$$

$$Pe = \frac{60}{9550 \times 0.71}\left(\frac{1}{2} \times 26.0 + 39.1\right) + 0.14$$

$$= 0.601 \text{ kW}$$

Hence, the motor which capacity is 0.601 kW or more should be chosen.

Example of calculating the conveyor drive

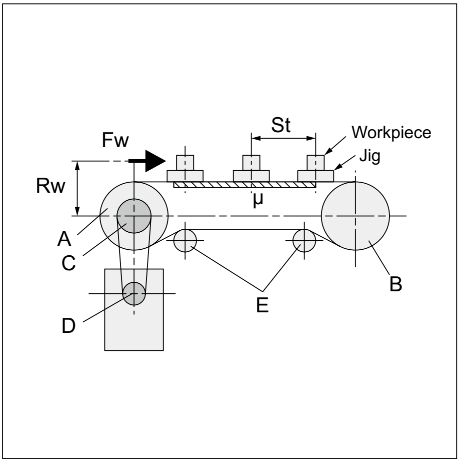

Selection conditions

(1) Model: PCIS

(2) Input shaft rotates continuously

(3) Input shaft rotational speed: N = 80 rpm

(4) Index angle: θh = 300 degrees

(5) Unit cycle time: t_0

$$t_0=\frac{60}{80}=0.75\ s$$

(6) Movement time (indexing time): t_1

$$t_1=0.75\times\frac{300}{360}=0.625\ s$$

(7) Cam curve: MS modified sign curve

(8) Approximate conveyor feed pitch:

St’=190 mm

(9) Chain size: #40

Chain pitch: Sch = 12.7 mm

Weight per unit: mch = 0.64 kg/m

(10) Number of chain threads: single

(11) Number of conveyor feed teeth: nc

$$\frac{St'}{Sch}=14.96$$

Determine nc = 15

(12) Fixed conveyor feed pitch:

$St=Sch\cdot nc=12.7\times15$

$=190.5$ mm

(13) Sprocket A (driving), B:

Weight … m_4 = 0.7 × 2 = 1.4 kg

Number of teeth … Za = 30

Pitch circle diameter…Da = 121.50 mm

(14) Sprocket C:

Weight … m_5 = 0.3 kg

Number of teeth … Zc = 20

Pitch circle diameter…Dc = 81.18 mm

(15) Sprocket D:

Weight … m_6 = 0.08 kg

Number of teeth … Zd = 10

Pitch circle diameter…Dd = 41.10 mm

(16) Reduction ratio of the output shaft:

$$io=\frac{Zd}{Zc}=\frac{1}{2}$$

(17) Index number:

$$n=\frac{Za}{nc}\cdot io=\frac{30}{15}\times\frac{1}{2}=1$$

(18) Number of jigs (pallets): np = 20

(19) Number of jigs (pallets):

m_3=0.8kg×20=16 kg

(20) Number of workpieces: nw = 5

(21) Total weight of workpieces:

m_2=0.4kg×5=2 kg

(22) Coefficient of friction: μ = 0.3

(23) Sprocket E (idler):

Weight … m_7 = 0.075 kg

Number of teeth … Ze = 10

Pitch circle diameter…De = 41.10 mm

Quantity … 2

(24) Suppose there is no force required for operation.

(25) When index drive is driven with a worm reducer.

(26) Index drives should be installed in Position #5.

(27) The shaft layout of index drive is S1.

(28) Expected service life: 20000 hours

Select the model suitable for the above conditions.

Size selection

1. Calculating the equivalent load torque: Tte

(1) Equivalent inertial torque for the output shaft: Tie

● Calculating the weight which is a load

Chain weight

$$m_1=St\cdot np\cdot mch\cdot\frac{1}{1000}$$

$$=190.5\times20\times0.64\times\frac{1}{1000}=2.44\ \mathrm{kg}$$

(1)-1 Calculating moment of inertia

Moment of inertia of the chain

$$I_1=2.44\times0.061^2$$

$$=0.0091\ \mathrm{kg\cdot m^2}$$

Moment of inertia of the sprockets A and B

$$I_4=\frac{1.4\times0.061^2}{2}=0.0026\ \mathrm{kg\cdot m^2}$$

Moment of inertia of the sprocket C

$$I_5=\frac{0.3\times0.041^2}{2}=0.0003\ \mathrm{kg\cdot m^2}$$

Moment of inertia of the 2 idlers

$$I_7=\frac{0.075\times0.021^2}{2}\times\left(\frac{Za}{Ze}\right)^2\times2$$

$$=\frac{0.075\times0.021^2}{2}\times3^2\times2=0.0003\ \mathrm{kg\cdot m^2}$$

Moment of inertia of the jigs (pallets)

$$I_3=16\times0.061^2$$

$$=0.0595\ \mathrm{kg\cdot m^2}$$

Moment of inertia of the workpieces

$$I_2=2\times0.061^2=0.0074\ \mathrm{kg\cdot m^2}$$

Moment of inertia of the sprocket D

$$I_6=\frac{0.08\times0.021^2}{2}=0.00002\ \mathrm{kg\cdot m^2}$$

● Equivalent inertial torque for the output shaft

$$Ie=(I_1+I_2+I_3+I_4+I_5+I_7)\cdot io^2+I_6$$

$$=0.0792\times(1/2)^2+0.00002$$

$$=0.0198\ \mathrm{kg\cdot m^2}$$

● Calculating the max. angular acceleration of the output shaft

$$\alpha=Am\cdot\frac{2\pi}{n}\cdot\left(\frac{360}{\theta h}\cdot\frac{N}{60}\right)^2$$

$$=5.53\times\frac{2\pi}{1}\times\left(\frac{360}{300}\times\frac{80}{60}\right)^2$$

$$=88.9\ \mathrm{rad/s^2}$$

(1)-2 Calculating the equivalent inertial torque for the output shaft

$$Tie=Ie\cdot\alpha=0.0198\times88.9$$

$$=1.76\ \mathrm{N\cdot m}$$

(2) Equivalent frictional torque for the output shaft: Tf

● Calculating the force applied to a sliding surface and bearing

$$Ff=m\cdot g=\left(\frac{m_1+m_3}{2}+m_2\right)\times9.81$$

$$=110\ \mathrm{N}$$

● Calculating the frictional torque

$$Tf=\mu\cdot Ff\cdot Rf=0.3\times110\times0.061$$

$$=2.01\ \mathrm{N\cdot m}$$

● Calculating the equivalent frictional torque for the output shaft

$$Tfe=Tf\cdot io$$

$$=2.01\times\frac{1}{2}$$

$$=1.01\ \mathrm{N\cdot m}$$

(3) Equivalent work torque for the output shaft
Since no force is required for work, the equivalent work torque

Twe will be zero.

(4) Equivalent load torque: Tte

$$Tte=Tie+Tfe+Twe$$

$$=1.76+1.01+0$$

$$=2.77\ \mathrm{N\cdot m}$$

2. Actual load torque: Te

● Determine the usage factors

fc=1.9

(Refer to Table C.1. Usage factors for various driving methods.)

● Actual load torque

$$Te=Tie\cdot fc+Tfe+Twe$$

$$=1.76\times1.9+1.01+0$$

$$=4.35\ \mathrm{N\cdot m}$$

Example of calculating the conveyor drive

3. Index drive size selection

You can find the index drives which rated output torque satisfies the actual load torque of Te = 4.35 N·m to be PCIS050 or greater in the rated output torque table. Provisionally select PCIS050 (Tr = 7.26 N·m, C = 50) and verify that this satisfies all the conditions.

Check. 1 Service life: Lh

Service life coefficient: fh

$$fh = \frac{Tr}{Te} = \frac{7.26}{4.35} = 1.67$$

$$Lh = 10000 \cdot fh^{(10/3)}$$
$$= 10000 \times 1.67^{(10/3)}$$
$$= 55300 \text{ h}$$

Hence, this satisfies the expected service life (20000 hours).

Based on the above, PCIS050-001300S115 is chosen.

4. Calculating the input shaft torque: Tc

$$Tc = Tci + Tcw$$

$$Tci = \frac{\psi}{\theta h} \cdot Qm \cdot Tie$$

$$Tcw = \frac{\psi}{\theta h} \cdot Vm \cdot (Tfe + Twe) + Tin$$

For the internal frictional torque Tin, refer to the characteristics table in the catalog.

$$Tci = \frac{360}{300} \times 0.99 \times 1.76$$
$$= 2.09 \text{ N·m}$$

$$Tcw = \frac{360}{300} \times 1.76 \times (1.01 + 0) + 1.7$$
$$= 3.83 \text{ N·m}$$

$$Tc = 2.09 + 3.83$$
$$= 5.92 \text{ N·m}$$

5. Selecting the worm reducer (HO series)

● Determine the reducer usage factors. (Table C.5)

$fr=1.5$

(Continuous operation: Operation exceeding 10 hours per day)

● Calculate a torque Ter of the output shaft of HO reducer.

$$Ter=Tc\cdot fr$$
$$=5.92\times1.5$$
$$=8.88\ \text{N}\cdot\text{m}$$

Verify Ter obtained here to be within the rated torque Trr of the standard combination reducer. The standard HO reducer for PCIS050 is HO32. The reduction ratio required for 80 rpm of the input shaft rotational speed is 1/20 for 60 Hz. Worm shaft rotational speed: Nr = 80 × 20 = 1600 rpm. Thus, calculate the dynamic rated output torque Trr when the worm shaft rotational speed of HO32 is 1600 rpm.

$Trr=21\ \text{N}\cdot\text{m}$

This is acceptable because Trr ≥ Ter.

Since the operation is continuous for this specification, the clutch and brake are not required.

Hence, the reducer HO32-1/20 without C/B is chosen.

6. Calculating the motor capacity

When index drive is driven with a worm reducer (HO series), calculate the motor capacity.

● Calculating the actual motor capacity: Pe

To calculate the internal frictional torque of the worm reducer, suppose the oil temperature to be 10°C.

$Tinr=0.24\ \text{N}\cdot\text{m}$

(Refer to Table C.6. Internal frictional torque of the HO reducer.)

$$Pr=\frac{Tinr\cdot Nr}{9550}=\frac{0.24\times1600}{9550}$$
$$=0.0402\ \text{kW}$$

$$Pe=\frac{N}{9550\times\eta}\left(\frac{1}{2}\times Tci+Tcw\right)+Pr$$

$$=\frac{80}{9550\times0.69}\left(\frac{1}{2}\times2.09+3.83\right)+0.0402$$

$$=0.099\ \text{kW}$$

Hence, a motor whose capacity is 0.099 kW or greater should be chosen.

Moment of inertia formulas

[m: Weight of body (kg)]

● A: when the rotational center is its shaft

1. Disc (Cylinder)

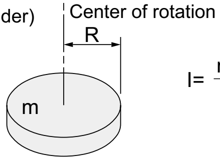

$$I=\frac{mR^2}{2}$$

2. Hollow disc (Hollow cylinder)

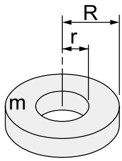

$$I=\frac{m\ (R^2+r^2)}{2}$$

3. Direct hexagonal side finish body

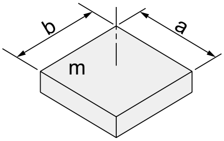

$$I=\frac{m\ (a^2+b^2)}{12}$$

4. Ring

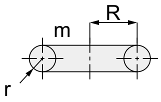

$$I=\frac{m\ (4R^2+3r^2)}{4}$$

5. Cylinder

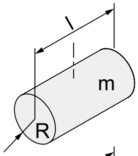

$$I=\frac{m\ (3R^2+l^2)}{12}$$

6. Hollow cylinder

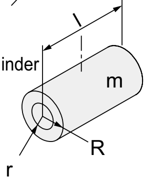

$$I=\frac{m\ (R^2+r^2+l^2/3)}{4}$$

● B: when the rotational center is not its shaft

1. Any shape (as long as sufficiently compact)

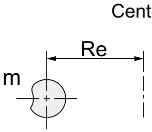

$$I=mRe^2$$

2. Disc (Cylinder)

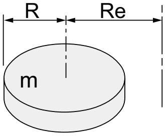

$$I=m\left(\frac{R^2}{2}+Re^2\right)$$

3. Hollow disc
(Hollow cylinder)

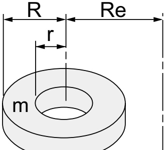

$$I=m\left(\frac{R^2+r^2}{2}+Re^2\right)$$

4. Direct hexagonal side finish body

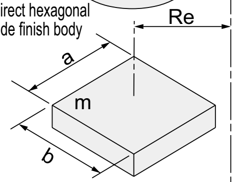

$$I=m\left(\frac{a^2+b^2}{12}+Re^2\right)$$

5. Cylinder

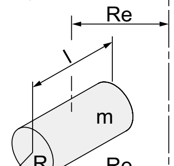

$$I=m\left(\frac{3R^2+l^2}{12}+Re^2\right)$$

6. Hollow cylinder

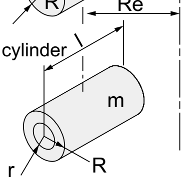

$$I=m\left(\frac{R^2+r^2+l^2/3}{4}+Re^2\right)$$

● Conveyor

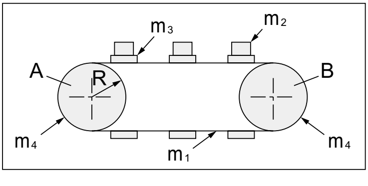

m_1: Weight of chain
m_2: Total weight of workpieces
m_3: Total weight of jigs (pallets)
m_4: Total weight of Sprocket A (driving) + B
R: Driving sprocket radius

$$I=(m_1+m_2+m_3+\frac{m_4}{2})\cdot R^2$$

List of symbols and formulas

Symbol	Name	Unit	Formula
A	Non-dimensional acceleration		
Am	Non-dimensional max. acceleration		
C	Shaft interval of the index drives	mm	
De	Max. diameter of the table	mm	
Dm	Allowable max. diameter of the table	mm	
Dt	Outside diameter of the table	mm	
Ff	Force applied to a sliding surface and bearing	N	Ff=m·g
Fw	Force required for work	N	
fa	Acceleration coefficient		
fc	Usage factor of the index drives		Refer to Table C.1.
fh	Service life coefficient		Refer to Table C.2.
ft	Table coefficient		Refer to Table C.3.
fr	Reducer usage factor Usage factor of the geared motor		Refer to Table C.5. Refer to Table C.7.
g	Gravitational acceleration	m/s^2	$1g=9.81m/s^2$
id	Reduction ratio (Reducer series)		
io	Reduction ratio of the output shaft		
ir	Reduction ratio		
I	Moment of inertia	$kg\cdot m^2$	Refer to the moment of inertia formulas
Ic	Moment of inertia of the input shaft	$kg\cdot m^2$	
Ie	Equivalent moment of inertia for the output shaft [For indirect drive]	$kg\cdot m^2$	$Ie=I\cdot io^2$
J	Non-dimensional jerk		
JMc	Converted moment of inertia for the motor shaft	$kg\cdot m^2$	
JM	Moment of inertia of the motor	$kg\cdot m^2$	
Jm	Non-dimensional max. jerk		
Lh	Service life	h	$Lh=10000\cdot fh^{(10/3)}$
m	Weight	kg	
mch	Weight of chain per unit length	kg/m	Refer to the catalogs of chain manufacturers.
N	Rotational speed of input shaft	rpm	● Index: $N=\frac{60}{t_0\cdot z}$ ● Oscillator: $N=\frac{60}{t_0}$
Nms	Motor speed	rpm	
Nr	Rotational speed of worm shaft	rpm	
Nrs	Rotational speed of output shaft	rpm	
n	index number		n=ns·io [For indirect drive]
nc	Number of conveyor feed teeth		
np	Number of jigs (pallets)		
ns	Number of stations		

List of symbols and formulas

Symbol	Name	Unit	Formula
n_w	Number of workpieces		
P	Motor capacity	kW	$P=\frac{Tc\cdot N}{9550\cdot\eta}$
Pe	Actual motor capacity	kW	●Worm reducer drive $Pe=\frac{N}{9550\cdot\eta}(\frac{1}{2}\cdot Tci+Tcw)+Pr$ ●Geared motor drive $Pe=\frac{N}{9550\cdot\eta}(Tci+Tcw)$
Pinv	Required capacity of the inverter	kW	
Pm	Motor output	kW	
Pr	Worm reducer unit itself Motor capacity		$Pr=\frac{Tinr\cdot Nr}{9550}$
Qm	Torque coefficient		Refer to Table C.4.
Rf	Average frictional radius	m	
Rw	Radius for work	m	
S	Non-dimensional displacement		
Sch	Chain pitch	mm	Refer to the catalogs of chain manufacturers.
St	Conveyor feed pitch	mm	
T	Non-dimensional time		
Taj	Release (Trip) torque	N·m	Taj=Te×1.3
Tc	Input shaft torque	N·m	Tc=Tci+Tcw
Tci	Input shaft torque due to inertia load	N·m	$Tci=\frac{\Psi}{\theta h}\cdot Qm\cdot Ti$
Tcw	Input shaft torque due to frictional load	N·m	$Tcw=\frac{\Psi}{\theta h}\cdot Vm\cdot(Tf+Tw)+Tin$
td	Motor control time	s	
Te	Actual load torque	N·m	Te=Ti·fc+Tf+Tw
Ter	Load torque of the reducer Geared motor load torque	N·m	Ter=Tc·fr
Tf	Frictional torque	N·m	Tf=μ·Ff·Rf
Tfe	Equivalent frictional torque for the output shaft (for indirect drive)	N·m	Tfe=Tf·io
Ti	Inertial torque	N·m	Ti=I·α
Tie	Equivalent inertial torque for the output shaft (for indirect drive)	N·m	Tie=Ie·α
Tin	Internal frictional torque of the index drives	N·m	Refer to the characteristics table of each model.
Tinr	Internal frictional torque of the reducer	N·m	Refer to Table C.6.
Tr	Dynamic rated output torque of the index drives	N·m	
Trr	Rated output torque of the reducer Allowable torque of the geared motor output shaft	N·m	
Tt	Load torque	N·m	Tt=Ti+Tf+Tw
Tte	Equivalent load torque for the output shaft	N·m	Tte=Tie+Tf+Tw
Tw	Work torque	N·m	Tw=Fw·Rw
Twe	Equivalent work torque for the output shaft (for indirect drive)	N·m	Twe=Tw·io

Symbol	Name	Unit	Formula
t_0	Unit cycle time	S	● Index: $t_0=t_1+t_2=\frac{60}{N\cdot z}$ ● Oscillator: $t_0=2\cdot(t_1+t_2)=\frac{60}{N}$
t_1	Indexing time	S	$t_1=\frac{\theta h}{360}\cdot\frac{60}{N}$
t_2	Dwell time	S	
ts	Stop time	S	
tm	Machine cycle time	S	$tm=t_0+ts$
V	Non-dimensional speed		
Vm	Non-dimensional max. speed		
Zp	Number of conveyor feed teeth		$Zp=\frac{St}{Sch}$
z	Dwell No.		
α	Max. angular acceleration	rad/s^2	● Index $\alpha=Am\cdot\frac{2\pi}{n}\cdot\left(\frac{360}{\theta h}\cdot\frac{N}{60}\right)^2$ ● Oscillator $\alpha=Am\cdot\frac{\pi\cdot\psi}{180}\cdot\left(\frac{360}{\theta h}\cdot\frac{N}{60}\right)^2$
η	Efficiency of the reducer		Refer to "Section D: Reducer Specifications."
θh	Index angle	°(degrees)	$\theta h=\frac{\theta t}{z}$ (Applicable only to the standard specification)
θt	Total index angle	°(degrees)	
μ	Coefficient of friction		
ψ	Oscillating angle	°(degrees)	$\psi=\frac{360}{n}$

● How to read Greek letters

Upper case	Lower case	How to read	Normal applications	Upper case	Lower case	How to read	Normal applications
Α	α	alpha	Angle, coefficient	Ο	ο	omicron	
Β	β	beta	Angle, coefficient	Π	π	pi	Pi (3.14159...) Angle, (upper case) symbol for product
Γ	γ	gamma	Angle, weight per unit area (upper case) relation				
Δ	δ	delta	Compact changes, density, displacement	Ρ	ρ	rho	Radius, density
Ε	ε	epsilon	Compact amount, strain	Σ	σ	sigma	Stress, standard deviation, (upper case) sum
Ζ	ζ	zeta	Variable	Τ	τ	tau	Time constant, time, torque
Η	η	eta	Variable				
Θ	θ	theta	Angle, temperature, time	Υ	υ	epsilon	
Ι	ι	iota		Φ	φ	phi	Angle, function, diameter
Κ	κ	kappa	Radius of gyration	Χ	χ	khi	
Λ	λ	lambda	Wave length, eigenvalue	Ψ	ψ	psi	Angle, relation
Μ	μ	mu	Coefficient of friction 10^{-6} (micro)	Ω	ω	omega	Angular speed = 2πf (Upper case) Ω = Electrical resistance unit
Ν	ν	nu	Frequency				
Ξ	ξ	xi	Variable				

List of symbols and formulas of the index and table (direct/indirect) drives

Selected model: ☐RGIS ☐RGIT ☐RGIL ☐RGIB ☐Other

Shape of the output shaft: ☐S (straight shaft) ☐F (flange shaft)

Material of housing: ☐ Fc ☐ Aℓ

Installation position: ☐1 ☐2 ☐3 ☐4 ☐5 ☐6

■ Operational conditions

1. Index number: n =

2. For the indirect drive of the table

- Output shaft reduction ratio: $io = \frac{D_1}{D_2} =$
- Number of stations: $ns = \frac{n}{io} =$

3. Total index angle (θt) = index angle (θh) × dwell No. (z)

°= °×

4. Cycle time

☐For continuous drive	Unit Cycle time (t_0) = indexing time (t_1) + dwell time (t_2) seconds = seconds + seconds
☐For intermittent drive	Machine Unit Cycle time (tm) = cycle time (t_0) + stopping time (ts) seconds = seconds + seconds *ts: Time when the input shaft is stopped because of C/B

5. Input shaft rotational speed: N

$$N = \frac{60}{\text{Unit cycle time } (t_0) \times \text{Dwell No. } (z)} = \quad \text{rpm}$$

6. Cam curve: ☐ MS (standard) ☐ MC ☐ MT ☐ Other (   )

7. Input shaft driving method

☐ Direct worm (1) [HO, TE, etc. installed]
☐ Direct worm (2) [connected via coupling]
☐ Indirect worm [Chain & belt drive]
☐ Gear motor

8. Expected service life

h

Unless otherwise specified, this will be calculated as 10000 hours.

C K D
TO: (   )

Company name		Name	
Department/ Section			
T E L		F A X	

[Options]

☐ Worm reducer: HO, CRG, TE series

- C/B ☐ Yes ☐ No
- Reduction ratio 1/
- Mounting direction

☐ Overload protection unit: TSF, TST, TGX ☐ — ☐

■ Load conditions

1. Table

- Diameter: Dt = ø ☐ mm
- Thickness: ht = ☐ mm
- Material: ☐ Steel ☐ Aluminum

  ☐ Other (Material: ☐ Material density: ☐)

2. Workpieces and jigs

- Number of workpieces: nw = ☐
- Total weight of workpieces: m_2 = ☐ × nw = ☐ kg
- Number of jigs: np = ☐
- Total weight of jigs: m_3 = ☐ × np = ☐ kg
- Mounting center diameter of workpieces and jigs: Dp = P.C.D ☐ mm

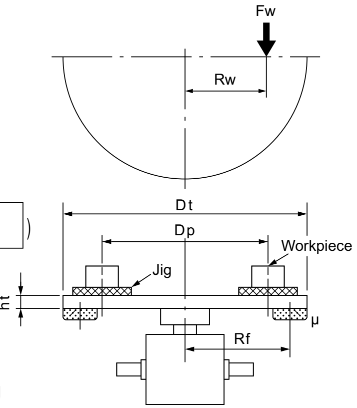

■ Direct drive

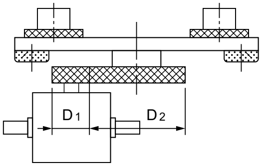

■ Indirect drive

3. Specification of the lower surface of the table (Yes / No)

- Frictional radius: Rf = ☐ mm
- Coefficient of friction: μ = ☐

4. External load during indexing (when the output shaft is operating)

- External load: Fw = ☐ N or ☐ kgf
- Action radius Rw = ☐ mm

	Index gear	Gear on the table side
P.C.D	D_1=	D_2=
Tooth width		

■ For a case other than the above conditions, contact our sales representative.

List of symbols and formulas of the index and conveyor drives

Selected model: ☐PCIS ☐RGIS ☐RGIL ☐Other
Shape of the output shaft: ☐S (straight shaft) ☐F (flange shaft)
Material of housing: ☐ Fc ☐ Aℓ
Installation position: ☐1 ☐2 ☐3 ☐4 ☐5 ☐6

■ Operational conditions

1. Index number: n =

2. Reduction ratio of the output shaft: $io = \frac{Zd}{Zc} =$

3. Total index angle (θt) = index angle (θh) × dwell No. (z)

° = ° × *Set Z=2 for 6,8 index of PCIS

4. Cycle time

☐ For continuous drive	Unit Cycle time (t_0) = indexing time (t_1) + dwell time (t_2) seconds = seconds + seconds
☐ For intermittent drive	Machine Unit Cycle time (tm) = cycle time (t_0) + stopping time (t_s) seconds = seconds + seconds *ts: Time when the input shaft is stopped because of C/B

5. Input shaft rotational speed: N

$$N = \frac{60}{\text{Unit cycle time } (t_0) \times \text{Dwell No. } (z)} = \quad \text{rpm}$$

6. Cam curve: ☐ MS (standard) ☐ MC ☐ MT ☐ Other ( )

7. Input shaft driving method
- ☐ Direct worm (1) [HO, TE, etc. installed]
- ☐ Direct worm (2) [connected via coupling]
- ☐ Indirect worm [Chain & belt drive]
- ☐ Gear motor

8. Expected service life

h

Unless otherwise specified, this will be calculated as 10000 hours.

C K D
TO: (   )

Company name		Name	
Department/ Section			
T E L		F A X	

[Options]

☐ Worm reducer: HO, CRG, TE series

- C/B ☐ Yes ☐ No
- Reduction ratio 1/
- Mounting direction

☐ Overload protection unit: TSF, TGX —

■ Load conditions

1. Conveyor feed pitch: St = mm

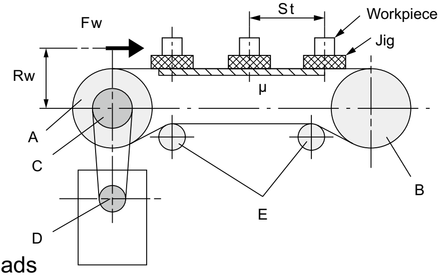

2. Chain size

- Chain model number
- Chain pitch: Sch = mm
- Weight per unit: mch =

3. Number of chain threads: NB = threads

4. Sprocket

	A (drive)	B	C	D	E
Number of teeth (Z)					
Pitch circle diameter (D)					
Tooth width (h)					
Number per thread	1	1			

5. Workpieces and jigs

- Number of workpieces: nw =
- Total weight of workpieces: m_2 = × nw = kg
- Number of jigs: np =
- Total weight of jigs: m_3 = × np = kg
- Coefficient of friction: μ =

6. External load during indexing (when the output shaft is operating)

- External load: Fw = N or kgf
- Action radius: Rw = mm

■ For cases other than the above conditions, contact our sales representative.

● SPECIFICATION

Product specifications D

● Common specifications

1. Installation position can be freely chosen. (Oilless)

2. Mounting face

On the face indicated with an arrow in the right figure, mounting holes are provided.

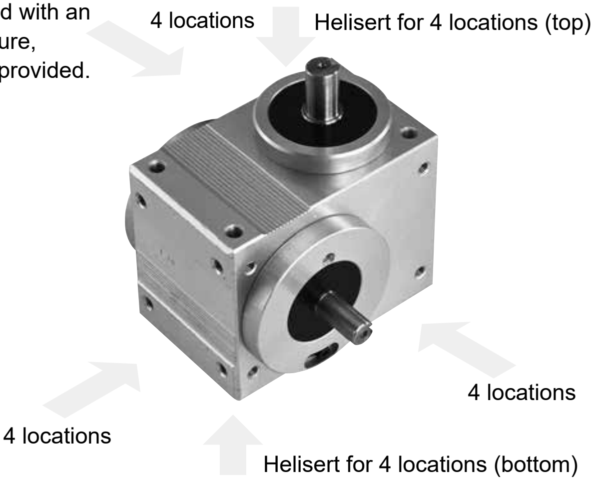

3. Material of housing / A ℓ

4. Oilless / grease filled lubrication

5. Diameter of input/output shaft stepped section

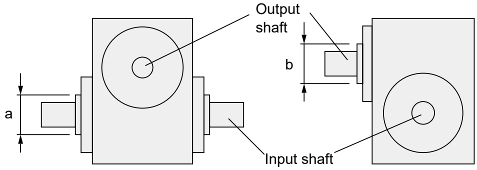

Dimensions / Size	a	b
025	ø 8.5	ø 13
032	ø 10.5	ø 15

6. Housing dowel pin hole dimensions (custom order)

When housing dowel pin holes are to be added, the dimensions should be as follows:

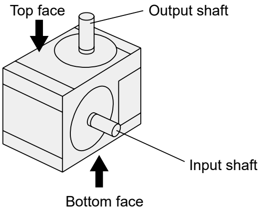

	025	032
Bottom face	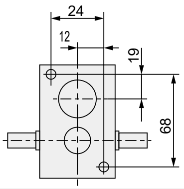	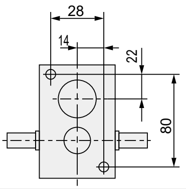
Standard bore	2-ø4H8 depth 6	2-ø5H7 depth 8

*For the tolerance of positioning pins on bottom face, contact us.

7. Optional gear head + motor

List of gear head + motor installation

Body Model No.		RGIS RGOS	025	032
Motor specification		Motor output	6W	15W
	Induction	Single-phase 100 V	◎	◎
		Single-phase 200V	○	○
	Reversible	Single-phase 100 V	○	○
		Single-phase 200V	○	○
	With Electromagnetic brake	Single-phase 100 V	○	○
		Single-phase 200V	○	○
	C/B	Single-phase 100 V	○	–
Gear head reduction ratio			1/3, 1/3.6, 1/5, 1/6, 1/7.5, 1/9, 1/12.5, 1/15, 1/18, 1/25, 1/30, 1/36, 1/50, 1/60, 1/75, 1/90, 1/100, 1/120, 1/150, 1/180	
Gear housing and belt pulley reduction ratio			1/1	

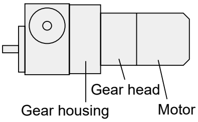

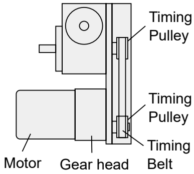

◎··· Standard (Given in external dimensions)
○··· Semi standard
– ··· No applicable model

Note: Electronic brake circuit is required when intermittently driven with an induction motor. Purchase a brake pack manufactured by Oriental Motor Company separately.

Note: Calculate the motor capacity before using.

8. Optional miniature worm reducer

Body	Model No.	Reducer Size	Reduction ratio
RGIS RGOS	025	CRG25	1/10, 1/20, 1/30, 1/40, 1/50, 1/60
	032	CRG32	1/10, 1/20, 1/30, 1/40, 1/50, 1/60

* Note that the actual reduction ratio of 1/20 and 1/40 will be 1/19.5 and 1/39 respectively.

9. Optional single-turn detection cam on the input shaft + proximity switch

Proximity switch model No.

SW model No.	Manufacturer
E2S-Q23	OMRON

10. Optional torque saver (TSF2 to TSF4) + release detection proximity switch

Proximity switch model No.

SW model No.	Manufacturer
TL-W3MC1	OMRON

11. About the options (motor)

Manufacturers specify the approximate service life for optional components as below. Depending on the operating frequency, a component may reach its service life quickly. Set up the maintenance schedule referring to the following service life.

Service life suggested by the manufacturers of optional components

Options	Approximate service life	Manufacturer
Motor with brake, Motor with C/B	2,000,000 operating cycles	Oriental Motors

Roller gear cam drive

Compact

1. Standard model No. Index series

RGIS 025 – 002 180 S 1 S A

Ⓐ Ⓑ Ⓒ Ⓓ Ⓔ Ⓕ Ⓖ Ⓗ

Ⓐ Model	Ⓑ Shaft interval		Ⓒ Index number (n)		Ⓓ Total index angle (θt)		Ⓔ Cam curve		Ⓕ Cam helix direction/dwell No.	
RGIS	025	25 mm	002	2	045	45°	S	MS curve (Standard)	1	Left helix/1 dwell
	032	32 mm	003	3	060	60°			2	Left helix/2 dwell
			004	4	090	90°	C	MC curve (MCV50)	3	Left helix/3 dwell
			005	5	120	120°			4	Left helix/4 dwell
			006	6	150	150°	T	MT curve		
			008	8	180	180°			5	Right helix/1 dwell
			009	9	210	210°			6	Right helix/2 dwell
			010	10	240	240°			7	Right helix/3 dwell
			012	12	270	270°			8	Right helix/4 dwell
			016	16	300	300°				
			018	18	330	330°				
			020	20						
			024	24						
			030	30						
			032	32						
			036	36						
			040	40						
			048	48						

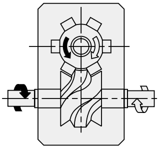
Left helix
(Standard)

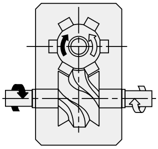
Right helix

For details of the timing chart, refer to B-7.

Example of model No. (1)

RGIS025-003120C1FA

Shaft interval .... 25 mm
Index number 3
Total index angle .... 120°
Cam curve .... MC curve
Cam helix direction/dwell No. .... Left helix/1 dwell
Shape of the output shaft .... Flange
Material of housing .... Al housing

Ⓖ	Shape of the output shaft	Ⓗ	Material of housing
S	Straight	A	Aluminum housing
F	Flange		
	* When a torque saver (optional) is installed, the code will be S.		* No Fc housing specification is available for the compact types.

Example of model No. (2)

RGIS032-048150S4SA

Shaft interval .... 32 mm
Index number 48
Total index angle .... 150° (37.5° × 4)
Cam curve .... MS curve
Cam helix direction/dwell No. .... Left helix/4 dwell
Shape of the output shaft .... Straight
Material of housing .... Al housing

Compact

2-1. Model No. with options

Common for index and oscillating series

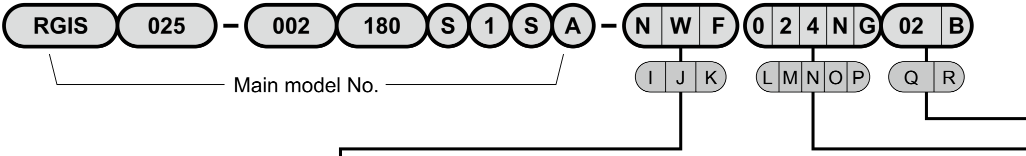

Input/Output shaft specification code

Ⓘ Input shaft specification code (left shaft)	Ⓙ Input shaft specification code (right shaft)	Ⓚ Output shaft specification code

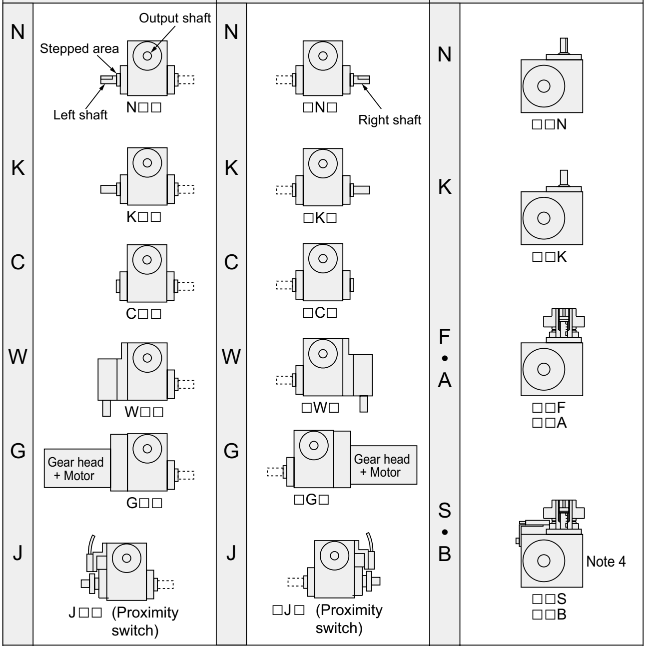

N	Standard (with keyway)
K	No keyway
C	Cutoff * This is cut off at the stepped spot. It will protrude from the housing. Verify the dimensions with the diagram.
W	With the worm reducer * Since the specification for the worm reducer (CRG reducer) is required, determine "Worm reducer installation specification code."
G	Gear head + motor * Since the specifications for the gear head and the motor are required, determine "Gear head and motor installation specification code."
J	Input shaft - with rotation detection cam + proximity switch (1 station) * Double or higher are custom order items. (When the input shaft is rotated in both directions, double may be required.) * The proximity switch detects 2 spots for the 2 dwell setup (including oscillation). If the dwell No. is 3 or greater, a custom order is required.

N	Standard (with keyway)
K	No keyway (straight shaft)
F	With Torque saver (TSF)
A	With Torque saver (TSF) (without keyway on the output shaft)
S	With Torque saver (TSF) + proximity switch for release detection
B	With Torque saver (TSF) + proximity switch for release detection (without keyway on the output shaft)

Since the specification for a torque saver is required when F, A, S, or B is selected, determine "Torque saver installation specification code."

▼ When a worm reducer is installed

Ⓛ Ⓜ Ⓝ Ⓞ Ⓟ

Ⓛ Ⓜ Reducer size		Ⓝ Reduction ratio	
02	CRG25	1	1/10
03	CRG32	2	1/20
		3	1/30
		4	1/40
		5	1/50
		6	1/60

▼ When a gear head and a motor are installed

Ⓛ Ⓜ Ⓝ Ⓞ Ⓟ

Ⓛ Motor type		Ⓜ Motor output	
E	Induction	A	6 W
R	Reversible	B	15 W
B	With brake		
C	With C/B		
	* Refer to List of gear heads and motor installation on D-4.		

* While a torque saver is installed onto the output shaft and when none of the worm reducer and the gear head & motor can be installed onto the input shaft, insert a hyphen "-" at Ⓛ and continue with the torque saver installation specification code.

Worm reducer installation specification code

Ⓞ Clutch Brake:		Ⓟ Mounting direction				
N	Clutch Brake: No * Clutch/Brake is not available for the compact worm reducer CRG series.	Left shaft installation	A 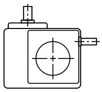	B 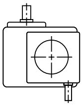	C 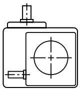	D 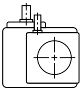
			J 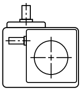 AR	K 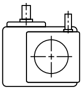 BR	L 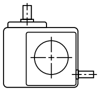 CR	M 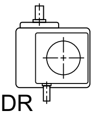 DR
		Right shaft installation	E 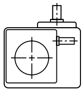	F 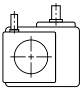	G 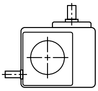	H 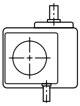
			N 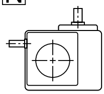 ER	P 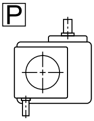 FR	Q 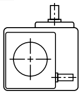 GR	R 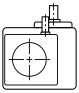 HR

Ⓠ Ⓡ Torque saver mounting specification code				Application index size
Ⓠ TSF size		Ⓡ Release torque range Note 1		
02	TSF2	A B	A B	025
03	TSF3	C D	C D	032
04	TSF4	C D	C D	032

When TSF4 is installed on RG□S032, the release torque range will be either C or D.

Note 1: When you specify the release torque of a torque saver, notify us of the value. Otherwise, the product will be shipped adjusted at the min. value within the adjusting range.

Note 2: When the reduction ratio is between 1/3 and 1/9, the input shaft rotational speed may reach 200 rpm or higher. Special specification model number is required.

Note 3: When the reduction ratio is between 1/100 and 1/180, the belt strength for the belt (lateral/longitudinal) drive will become an issue. Please contact CKD.

Note 4: The proximity switch for release detection of a torque saver is the NO type. NC type is also available.

Gear head + motor installation specification code

Ⓝ Rated voltage		Ⓞ Gear head reduction ratio Note 2, 3				Ⓟ Driving method					
A	Single-phase 100 V	A	1/3	L	1/30	G	Gear drive 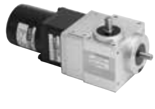	H	Lateral belt drive 	V	Longitudinal belt drive 
		B	1/3.6	M	1/36						
C	Single-phase 200 V	C	1/5	N	1/50						
		D	1/6	P	1/60						
		E	1/7.5	Q	1/75						
		F	1/9	R	1/90						
		G	1/12.5	S	1/100						
		H	1/15	T	1/120						
		J	1/18	U	1/150						
		K	1/25	V	1/180						

2-2. Examples of model numbers with options / 3. Custom specification model No.

When you place an order with a model number, ensure that it matches exactly what you ordered. Even if 1 letter is incorrectly written in symbols representing the model No., the product will be with incorrect specifications.
In order to deliver what you require, carefully determine the model number referring to the following examples.

Example of model No. (3)

RGIS025-020240S2SA-NNK
Input shaft specification
  Left shaft: Standard
  Right shaft: Standard
Output shaft specification
  No keyway

Example of model No. (4)

RGIS032-008090S1SA-NGNEBANH
Input shaft specification
  Left shaft: Standard
  Right shaft: Gear head + motor installed
Output shaft specification: Standard

Motor installation specification
  Motor type: Induction
  Motor output: 15 W
  Voltage: Single-phase 100 V
  Reduction ratio: 1/50
  Driving method: Lateral belt drive

Example of model No. (5)

RGIS025-003210S1SA-NNF-02B
Input shaft specification
  Left shaft: Standard
  Right shaft: Standard
Output shaft specification: Torque saver installed

Torque saver mounting specification
  TSF size: TSF2
  Release torque range: B

Example of model No. (6)

RGIS032-008270S1SA-JGSRBAKH03A
Input shaft specification
  Left shaft: Input shaft - with rotation detection cam + proximity switch (1 station)
  Right shaft: Gear head + motor installed
Output shaft specification: Torque saver installed (with proximity switch)

Gear head + motor installation specification
  Motor type: Reversible
  Motor output: 15 W
  Voltage: Single-phase 100 V
  Reduction ratio: 1/25
  Driving method: Lateral belt drive

Torque saver mounting specification
  TSF size: TSF3
  Release torque range: A

● Special specification model number Common for index and oscillating series

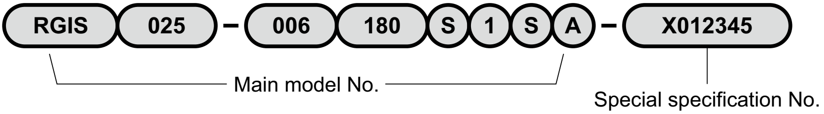

* Add "-X (6 digit number)" after the main model No. as the special specification number.
The special specification model number shall be determined after the consultation with the customer. Options other than the standard are available upon request. Please provide us with the specifications.
* High speed specifications (input shaft rotational speed of 200 rpm or higher) are deemed to be special specifications.

Roller gear cam drive

Compact

1. Standard model No. Oscillating series

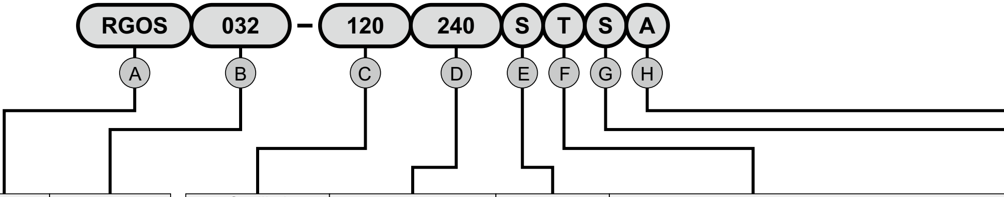

Ⓐ Model	Ⓑ Shaft interval	
RGOS	025	25 mm
	032	32 mm

Ⓒ Oscillating angle (ψ)		Ⓓ Total index angle (θt)		Ⓔ Cam curve		Ⓕ Orbit pattern	
180	180°	090	90° (45°×2)	S	MS curve (Standard)	T (Standard)	When the input shaft starts to rotate from the rotation reference point, the output shaft rotates in sequence from 1 and 2 as in the figure. 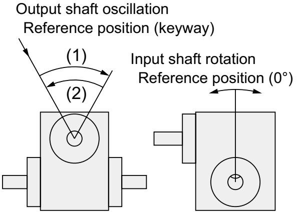
120	120°	120	120° (60°×2)				
090	90°	180	180° (90°×2)	C	MC curve (MCV50)		
060	60°	240	240° (120°×2)	T	MT curve		
045	45°	300	300° (150°×2)				
030	30°	360	360° (180°×2)				
						S	When the input shaft starts to rotate from the rotation reference point, the output shaft rotates in sequence from 1 and 2 as in the figure. 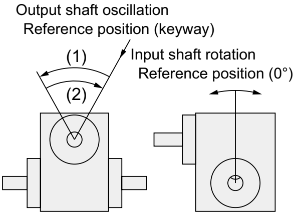 For details of the timing chart, refer to B-7.

Example of model No. (1)

RGOS025-180300STSA

Shaft interval	25 mm
Oscillating angle	180°
Total index angle	300° (150° × 2)
Cam curve	MS curve
Orbit pattern	T
Shape of the output shaft	Straight
Material of housing	Al housing

Ⓖ Shape of the output shaft		Ⓗ Material of housing	
S	Straight	A	Aluminum housing
F	Flange		
	* When a torque saver (optional) is installed, the code will be S.		* No Fc housing specification is available for the compact types.

Example of model No. (2)

RGOS032-060120STFA

Shaft interval	32 mm
Oscillating angle	60°
Total index angle	120° (60° × 2)
Cam curve	MS curve
Orbit pattern	T
Shape of the output shaft	Flange
Material of housing	Al housing

Compact

Index	RG I S 025
Oscillator	RGOS 025

● Standard specifications

Dimensions

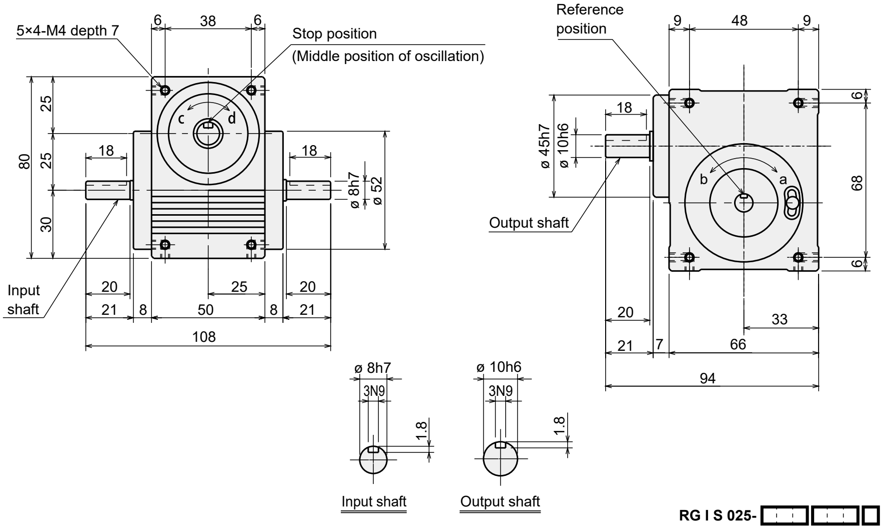

RG I S 025-☐☐☐☐ SA
RGOS 025

Characteristics

Descriptions	Unit	Characteristics	
		Output shaft	Input shaft
Allowable thrust force	N	300	200
Allowable radial force	N	250	200
Allowable bending moment	N·m	7	–
Moment of inertia	$kg \cdot m^2$	9.14×10^{-6}	9.42×10^{-6}

Descriptions	Unit	Characteristics
Internal frictional torque (Tin)	N·m	0.68
Product weight	kg	1
Oil level	ℓ	Sealed grease
Body color		Silver
Finishing		Alumite

Accuracy

Index accuracy (sec.)		
Indexing accuracy	1 dwell	±90
	2 dwell	±180
	3 dwell	±240
	4 dwell	±300
Repeatability		45

Oscillating accuracy (sec.)	
Indexing accuracy	±180
Repeatability	45

* For dwell accuracy, please contact us.

List of index angles

Index series **RGIS 025** Cam curve / MS

	Total index angle(θt) / Index number(n)	45	60	90	120	150	180	210	240	270	300	330
1 dwell	2					○	○	○	○	○	○	○
	3				○	○	○	○	○	○	○	○
	4				○	○	○	○	○	○	○	○
	5								○	○	○	○
	6		○	○	○	○	○	○	○	○	○	○
	8			○	○	○	○	○	○	○	○	○
	9				○	○	○	○	○	○	○	○
	10				○	○	○	○	○	○	○	○
2 dwell	16				○	○	○	○	○	○	○	○
	18				○	○	○	○	○	○	○	○
	20				○	○	○	○	○	○	○	○
3 dwell	24					○	○	○	○	○	○	○
	30					○	○	○	○	○	○	○
4 dwell	32						○	○	○	○	○	○
	36						○	○	○	○	○	○
	40					○	○	○	○	○	○	○

Oscillating series **RGOS 025** Cam curve / MS

Total index angle(θt) / Oscillating angle (ψ)	90	120	180	240	300	360
180					○	○
120				○	○	○
90				○	○	○
60		○	○	○	○	○
45			○	○	○	○

Dimensions with options

With worm reducer (CRG25)

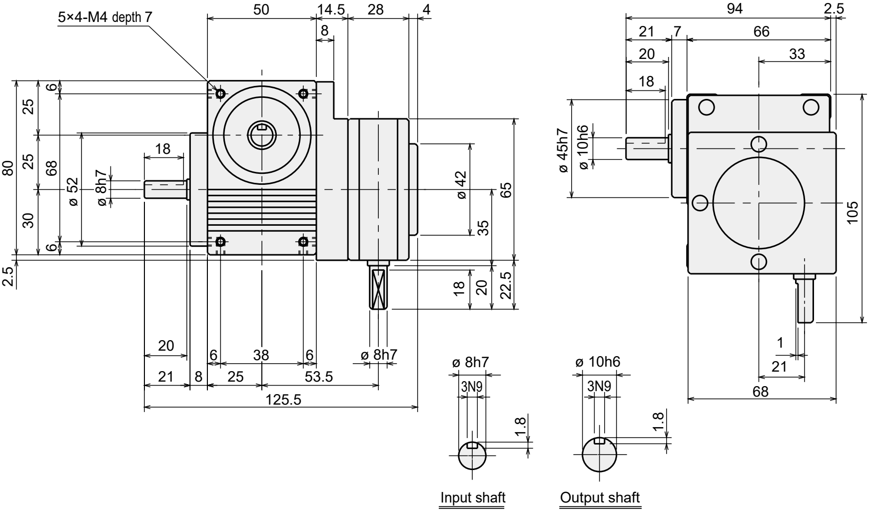

RG I S 025-☐☐☐☐☐☐☐☐ SA-NWN02 ☐ NG
RGOS 025

With Gear head + motor (gear drive)

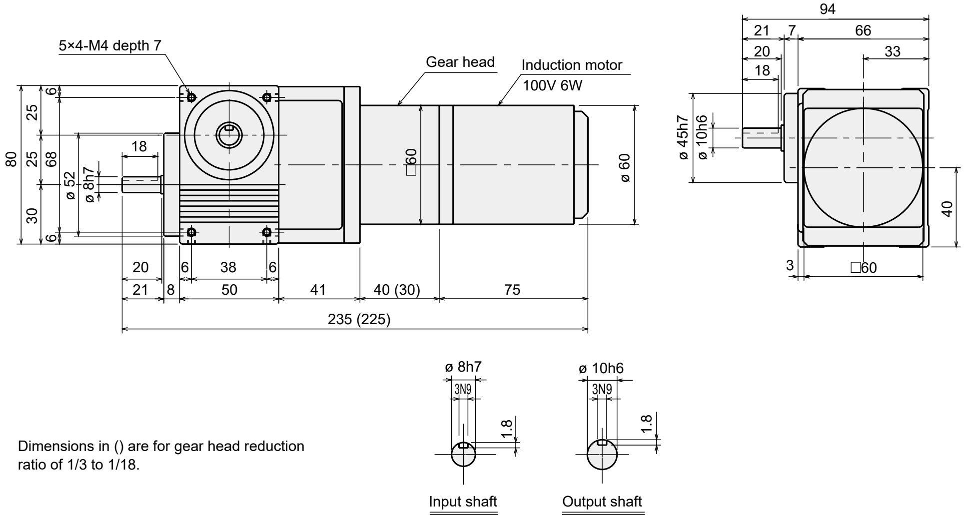

Dimensions in () are for gear head reduction ratio of 1/3 to 1/18.

RG I S 025-☐☐☐☐☐☐☐☐ SA-NGNEAA ☐ G
RGOS 025

With Gear head + motor (lateral gear drive)

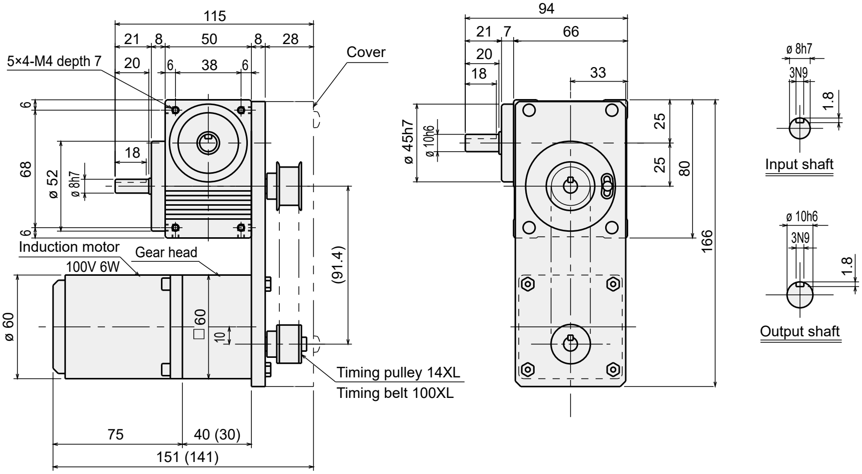

Dimensions in ( ) are for gear head reduction ratio of
Dimensions are for 1/3 to 1/18.

RG I S 025-☐☐☐☐SA-NGNEAA☐H
RGOS 025

With Gear head + motor (longitudinal gear drive)

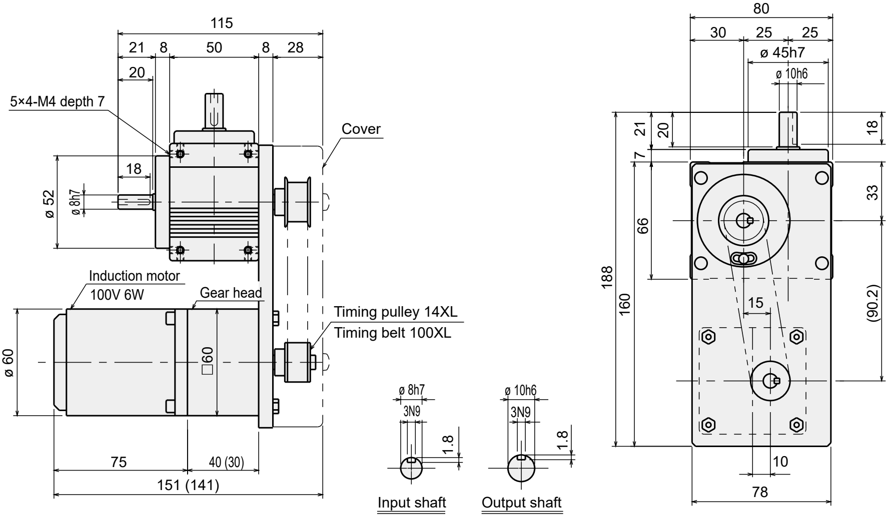

Dimensions in () are for gear head reduction ratio of 1/3 to 1/18.

RG I S 025-☐☐☐☐SA-NGNEAA☐V
RGOS 025

Index	**RG I S 025**
Oscillator	**RGOS 025**

● Dimensions with options

Input shaft - with rotation detection cam + proximity switch

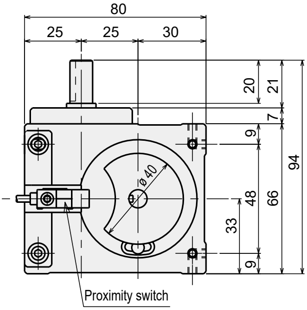

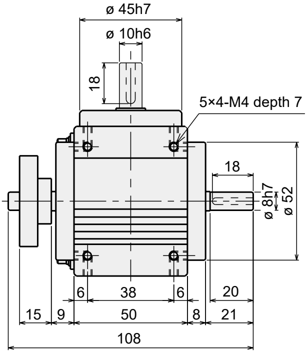

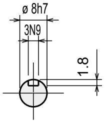

Input shaft

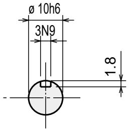

Output shaft

RG I S 025- ☐☐☐☐☐☐☐☐ **SA-JNN**
RGOS 025

With Torque saver (TSF2)

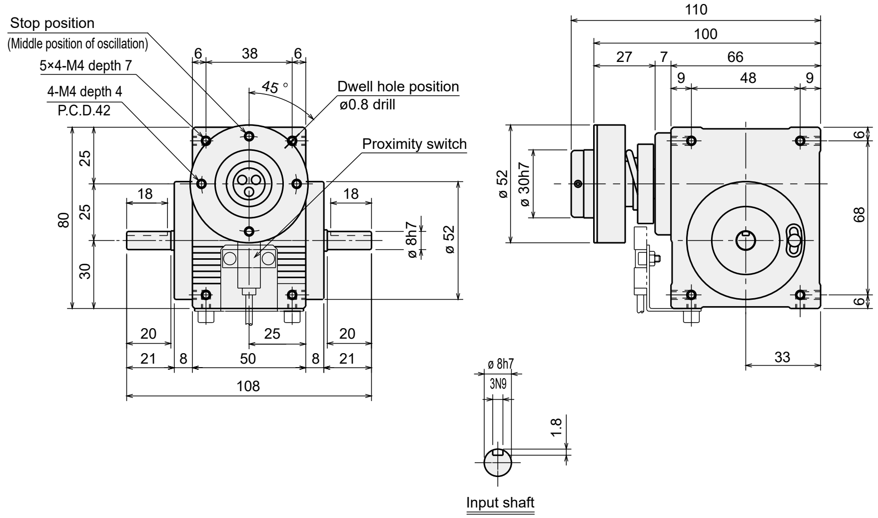

RG I S 025-☐☐☐☐ SA-NNF-02 ☐
RGOS 025

Product specifications
Roller gear cam drive
Compact
Standard
Table
Wide angle
Basic
Parallel cam drive
Pick and Place drive
Circular
Linear
Option

Difference between shafts: **25** mm Flange shaft

Compact

Index	**RG I S 025**
Oscillator	**RGOS 025**

● Standard specifications

Dimensions

CAD

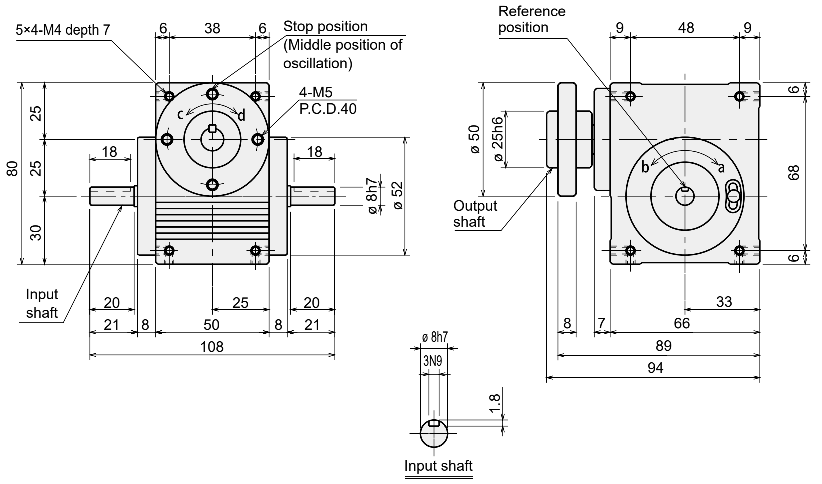

RG I S 025-☐☐☐☐**FA**
RGOS 025

Characteristics

Descriptions	Unit	Characteristics	
		Output shaft	Input shaft
Allowable thrust force	N	300	200
Allowable radial force	N	250	200
Allowable bending moment	N·m	7	-
Moment of inertia	kg·m^2	2.36×10^{-5}	9.42×10^{-6}

Descriptions	Unit	Characteristics
Internal frictional torque (Tin)	N·m	0.68
Product weight	kg	1
Oil level	ℓ	Sealed grease
Body color		Silver
Finishing		Alumite

Accuracy

Index accuracy (sec.)		
Indexing accuracy	1 dwell	±90
	2 dwell	±180
	3 dwell	±240
	4 dwell	±300
Repeatability		45

Oscillating accuracy (sec.)	
Indexing accuracy	±180
Repeatability	45

* For dwell accuracy, please contact CKD.

List of index angles

Index series **RGIS 025** Cam curve/MS

	Total index angle(θt) / Index number(n)	45	60	90	120	150	180	210	240	270	300	330
1 dwell	2					○	○	○	○	○	○	○
	3				○	○	○	○	○	○	○	○
	4				○	○	○	○	○	○	○	○
	5								○	○	○	○
	6		○	○	○	○	○	○	○	○	○	○
	8			○	○	○	○	○	○	○	○	○
	9				○	○	○	○	○	○	○	○
	10				○	○	○	○	○	○	○	○
2 dwell	16				○	○	○	○	○	○	○	○
	18				○	○	○	○	○	○	○	○
	20				○	○	○	○	○	○	○	○
3 dwell	24					○	○	○	○	○	○	○
	30					○	○	○	○	○	○	○
4 dwell	32						○	○	○	○	○	○
	36						○	○	○	○	○	○
	40					○	○	○	○	○	○	○

Oscillating series **RGOS 025** Cam curve/MS

Total index angle(θt) / Oscillating angle (ψ)	90	120	180	240	300	360
180					○	○
120				○	○	○
90				○	○	○
60		○	○	○	○	○
45			○	○	○	○

Dimensions with options

With worm reducer (CRG25)

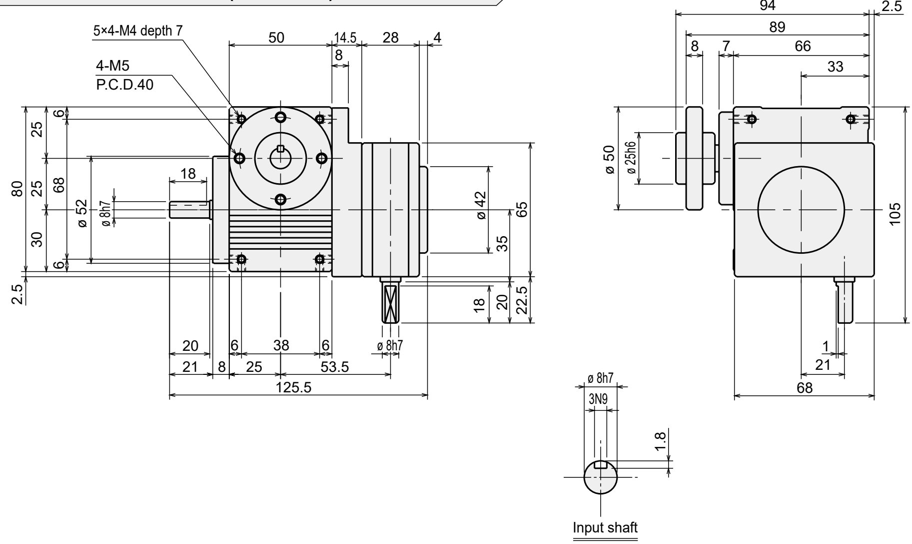

RG I S 025-□□□□ FA-NWN02 □ NG
RGOS 025

With Gear head + motor (gear drive)

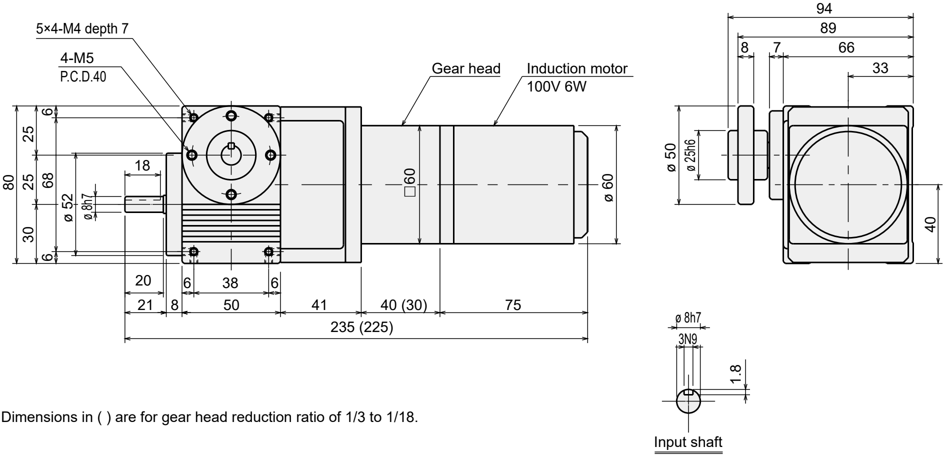

Dimensions in ( ) are for gear head reduction ratio of 1/3 to 1/18.

RG I S 025-□□□□ FA-NGNEAA □ G
RGOS 025

With Gear head + motor (lateral gear drive)

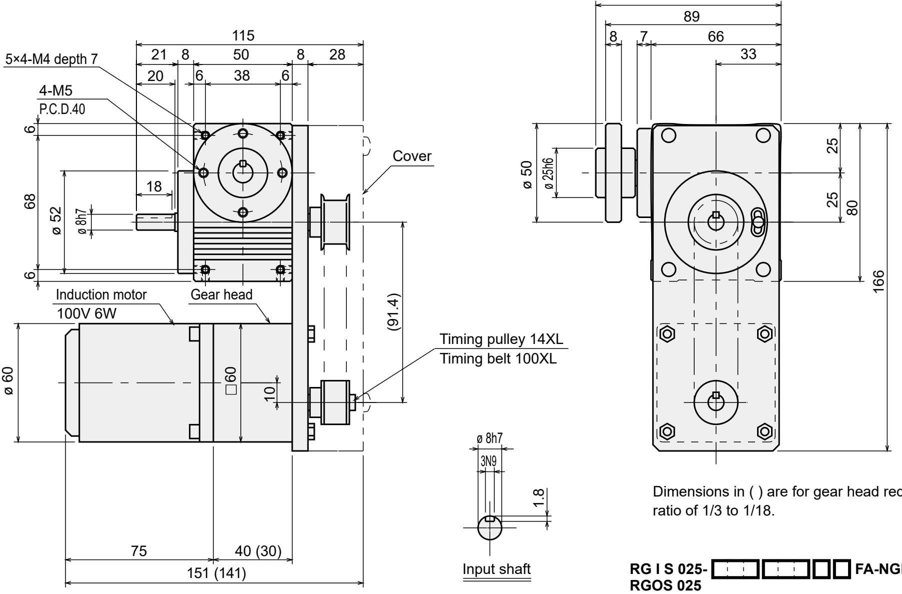

Dimensions in ( ) are for gear head reduction ratio of 1/3 to 1/18.

RG I S 025-☐☐☐☐FA-NGNEAA☐H
RGOS 025

With Gear head + motor (longitudinal gear drive)

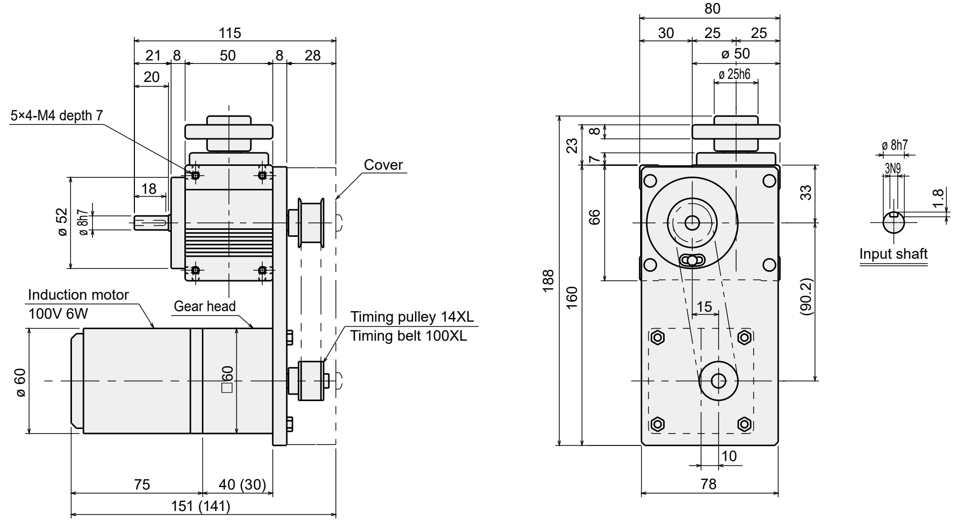

Dimensions in ( ) are for gear head reduction ratio of 1/3 to 1/18.

RG I S 025-☐☐☐☐FA-NGNEAA☐V
RGOS 025

● Dimensions with options

Input shaft - with rotation detection cam + proximity switch

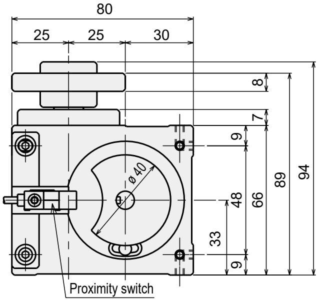

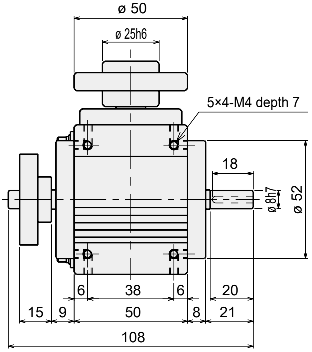

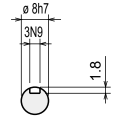

Input shaft

RG I S 025-☐☐☐☐☐☐☐☐ FA-JNN
RGOS 025

●MEMO

Compact

Index	**RG I S 032**
Oscillator	**RGOS 032**

Standard specifications

Dimensions

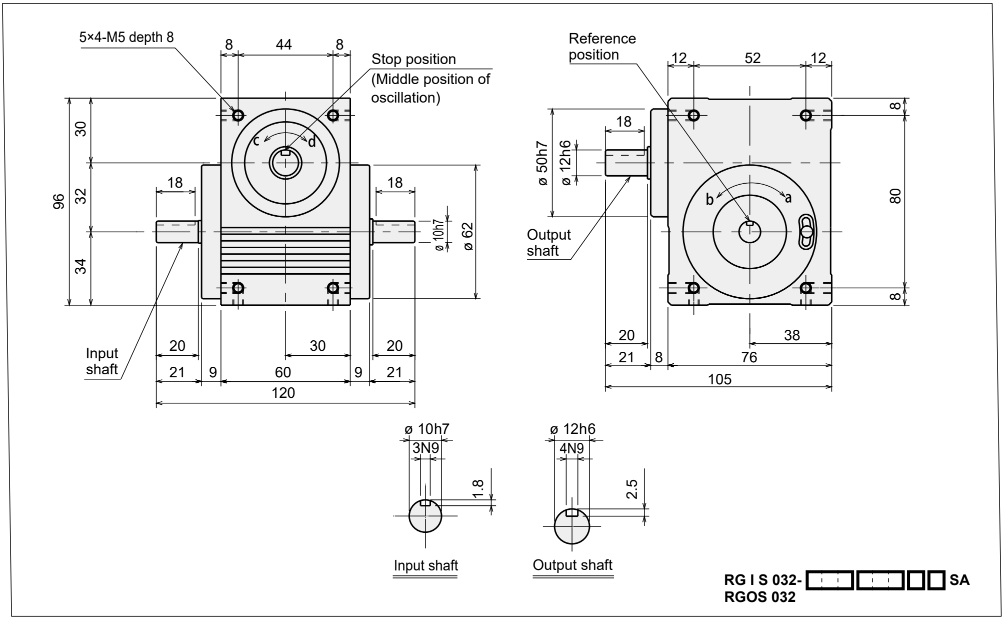

Characteristics

Descriptions	Unit	Characteristics	
		Output shaft	Input shaft
Allowable thrust force	N	400	220
Allowable radial force	N	400	250
Allowable bending moment	N·m	12	-
Moment of inertia	kg·m^2	2.23 × 10^{-5}	2.94 × 10^{-5}

Descriptions	Unit	Characteristics
Internal frictional torque (Tin)	N·m	1.1
Product weight	kg	1.4
Oil level	ℓ	Sealed grease
Body color		Silver
Finishing		Alumite

Accuracy

	Index accuracy (sec.)	
Indexing accuracy	1 dwell	±60
	2 dwell	±180
	3 dwell	±240
	4 dwell	±300
Repeatability		30

Oscillating accuracy (sec.)	
Indexing accuracy	±180
Repeatability	30

* For dwell accuracy, please contact CKD.

List of index angles

Index series **RGIS 032** Cam curve / MS

	Total index angle(θt) / Index number(n)	45	60	90	120	150	180	210	240	270	300	330
1 dwell	2					○	○	○	○	○	○	○
	3				○	○	○	○	○	○	○	○
	4			○	○	○	○	○	○	○	○	○
	5					○	○	○	○	○	○	○
	6		○	○	○	○	○	○	○	○	○	○
	8	○	○	○	○	○	○	○	○	○	○	○
	9			○	○	○	○	○	○	○	○	○
	10			○	○	○	○	○	○	○	○	○
	12			○	○	○	○	○	○	○	○	○
2 dwell	16				○	○	○	○	○	○	○	○
	18				○	○	○	○	○	○	○	○
	20				○	○	○	○	○	○	○	○
	24			○	○	○	○	○	○	○	○	○
3 dwell	24					○	○	○	○	○	○	○
	30					○	○	○	○	○	○	○
	36				○	○	○	○	○	○	○	○
4 dwell	32						○	○	○	○	○	○
	36					○	○	○	○	○	○	○
	40					○	○	○	○	○	○	○
	48				○	○	○	○	○	○	○	○

Oscillating series **RGOS 032** Cam curve / MS

Total index angle(θt) / Oscillating angle (ψ)	90	120	180	240	300	360
180					○	○
120				○	○	○
90			○	○	○	○
60		○	○	○	○	○
45	○	○	○	○	○	○
30			○	○	○	○

Dimensions with options

With worm reducer (CRG32)

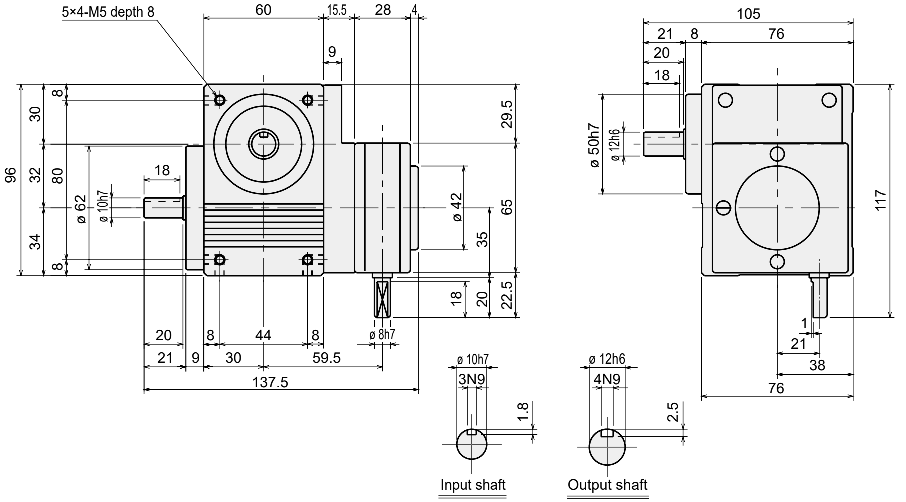

RG I S 032-☐☐☐☐☐☐☐☐SA-NWN03☐NG
RGOS 032

With Gear head + motor (gear drive)

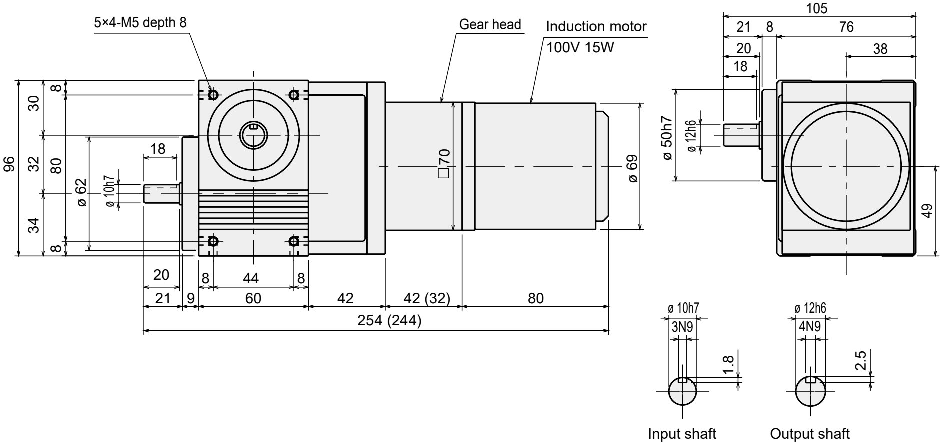

Dimensions in ( ) are for gear head reduction ratio of 1/3 to 1/18.

RG I S 032-☐☐☐☐☐☐☐☐SA-NGNEBA☐G
RGOS 032

With Gear head + motor (lateral gear drive)

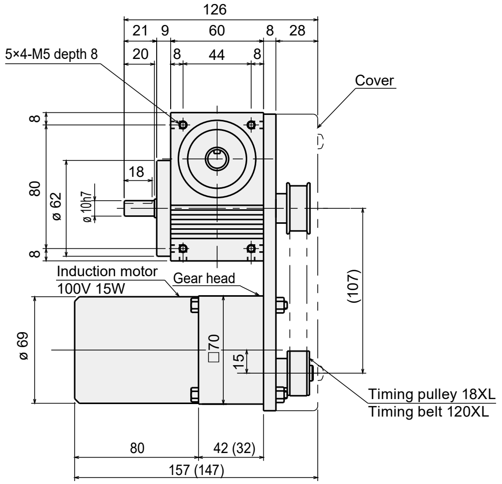

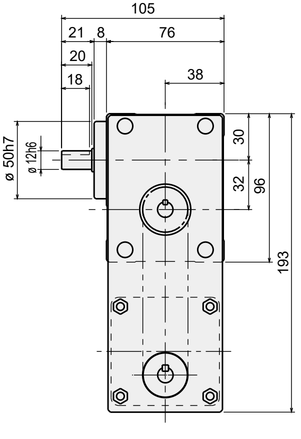

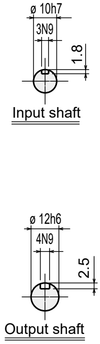

Dimensions in ( ) are for gear head reduction ratio of 1/3 to 1/18.

RG I S 032- ☐ ☐ ☐ ☐ **SA-NGNEBA** ☐ **H**
RGOS 032

With Gear head + motor (longitudinal gear drive)

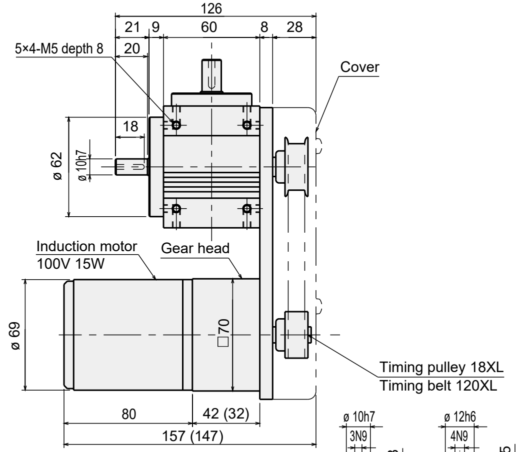

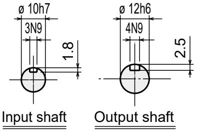

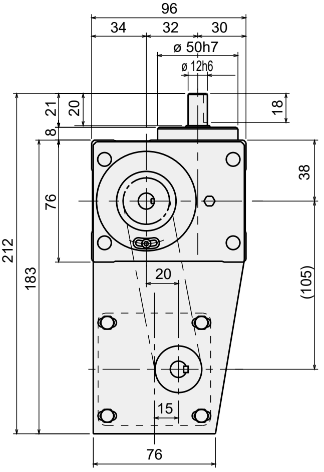

Dimensions in ( ) are for gear head reduction ratio of 1/3 to 1/18.

RG I S 032- ☐ ☐ ☐ ☐ **SA-NGNEBA** ☐ **V**
RGOS 032

Dimensions with options

Input shaft - with rotation detection cam + proximity switch

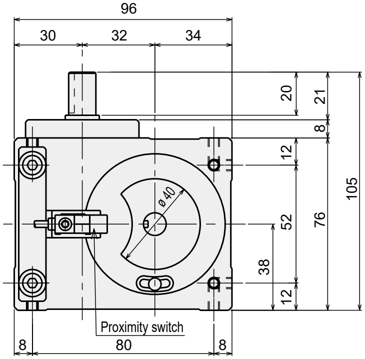

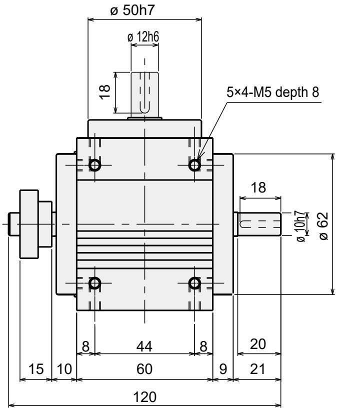

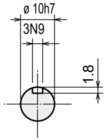

Input shaft

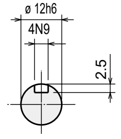

Output shaft

RG I S 032-☐☐☐☐SA-JNN
RGOS 032

With Torque saver (TSF3)

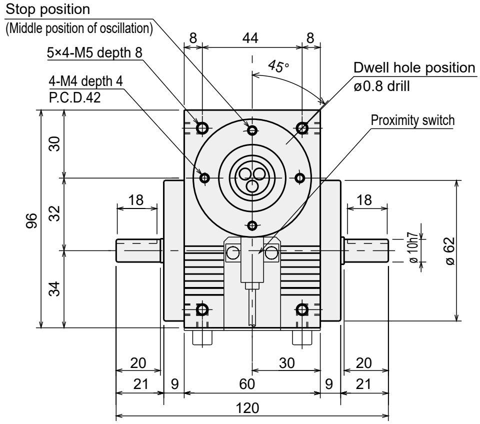

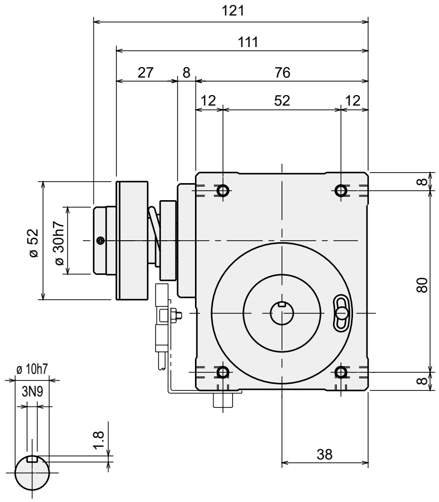

Input shaft

RG I S 032- ☐☐☐☐ **SA-NNF-03** ☐
RGOS 032

With Torque saver (TSF4)

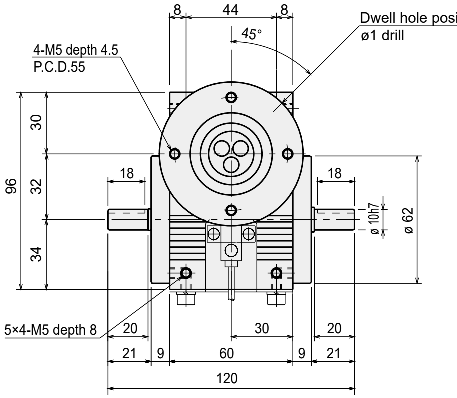

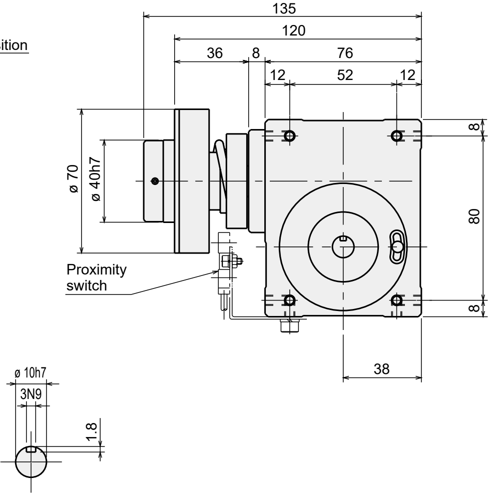

Input shaft

The adjusting range of release torque is either C or D.

RG I S 032- ☐☐☐☐ **SA-NNF-04** ☐
RGOS 032

Difference between shafts: **32** mm Flange shaft

Compact

Index	RG I S 032
Oscillator	RGOS 032

● Standard specifications

Dimensions

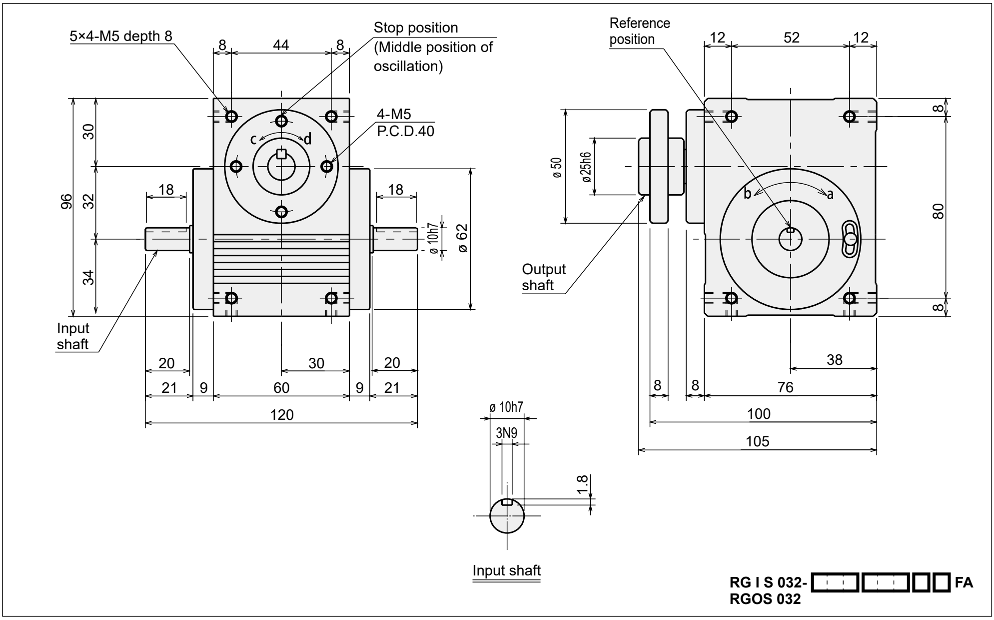

Characteristics

Descriptions	Unit	Characteristics	
		Output shaft	Input shaft
Allowable thrust force	N	400	220
Allowable radial force	N	400	250
Allowable bending moment	N·m	12	-
Moment of inertia	kg·m^2	3.67 × 10^{-5}	2.94 × 10^{-5}

Descriptions	Unit	Characteristics
Internal frictional torque (Tin)	N·m	1.1
Product weight	kg	1.4
Oil level	ℓ	Sealed grease
Body color		Silver
Finishing		Alumite

Accuracy

Index accuracy (sec.)		
Indexing accuracy	1 dwell	±60
	2 dwell	±180
	3 dwell	±240
	4 dwell	±300
Repeatability		30

Oscillating accuracy (sec.)	
Indexing accuracy	±180
Repeatability	30

* For dwell accuracy, please contact us.

List of index angles

Index series **RGIS 032** Cam curve / MS

	Total index angle(θt) / Index number(n)	45	60	90	120	150	180	210	240	270	300	330
1 dwell	2					○	○	○	○	○	○	○
	3				○	○	○	○	○	○	○	○
	4			○	○	○	○	○	○	○	○	○
	5					○	○	○	○	○	○	○
	6		○	○	○	○	○	○	○	○	○	○
	8	○	○	○	○	○	○	○	○	○	○	○
	9			○	○	○	○	○	○	○	○	○
	10			○	○	○	○	○	○	○	○	○
	12			○	○	○	○	○	○	○	○	○
2 dwell	16				○	○	○	○	○	○	○	○
	18				○	○	○	○	○	○	○	○
	20				○	○	○	○	○	○	○	○
	24			○	○	○	○	○	○	○	○	○
3 dwell	24					○	○	○	○	○	○	○
	30					○	○	○	○	○	○	○
	36				○	○	○	○	○	○	○	○
4 dwell	32						○	○	○	○	○	○
	36					○	○	○	○	○	○	○
	40					○	○	○	○	○	○	○
	48				○	○	○	○	○	○	○	○

Oscillating series **RGOS 032** Cam curve / MS

Total index angle(θt) / Oscillating angle (ψ)	90	120	180	240	300	360
180					○	○
120				○	○	○
90			○	○	○	○
60		○	○	○	○	○
45	○	○	○	○	○	○
30			○	○	○	○

Dimensions with options

With worm reducer (CRG32)

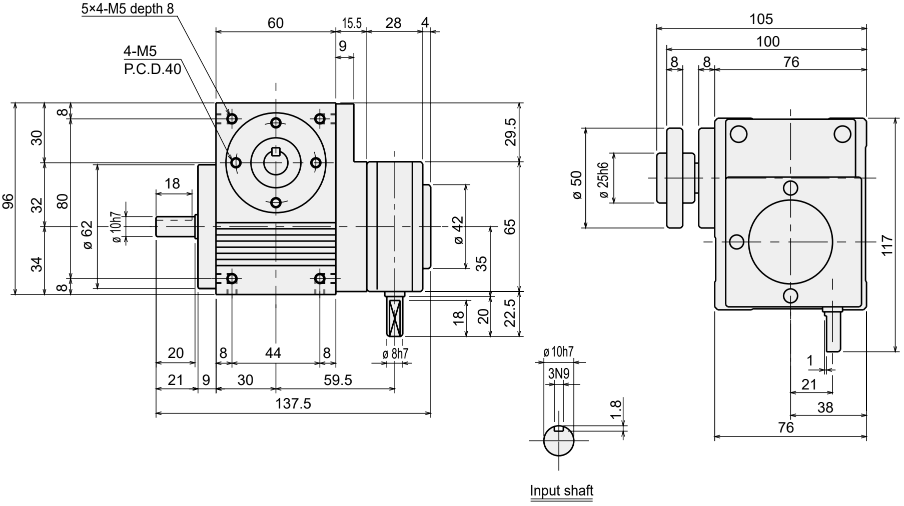

RG I S 032-☐☐☐☐ FA-NWN03☐NG
RGOS 032

With Gear head + motor (gear drive)

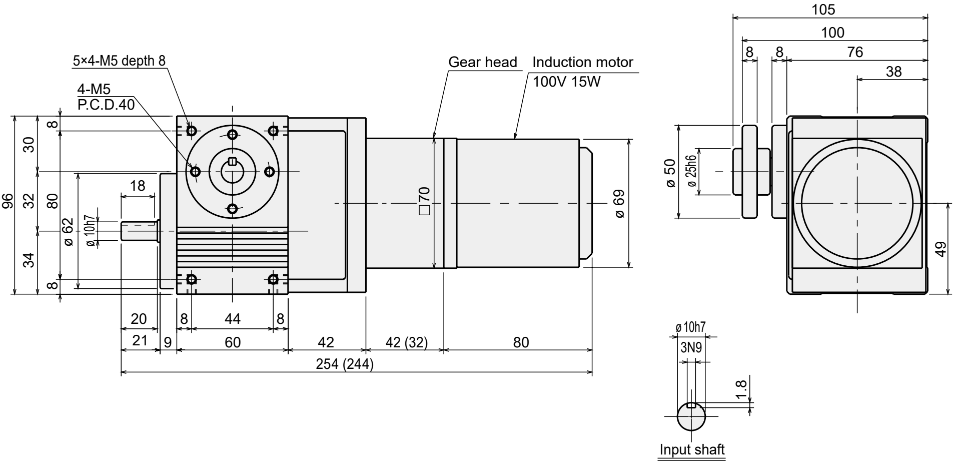

Dimensions in ( ) are for gear head reduction ratio of 1/3 to 1/18.

RG I S 032-☐☐☐☐ FA-NGNEBA☐G
RGOS 032

With Gear head + motor (lateral gear drive)

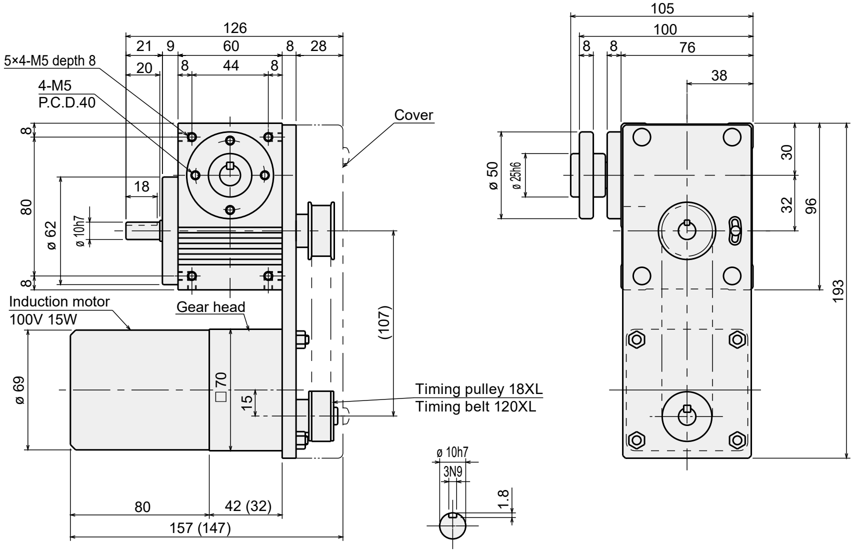

Dimensions in ( ) are for gear head reduction ratio of 1/3 to 1/18.

RG I S 032-☐☐☐☐FA-NGNEBA☐H
RGOS 032

With Gear head + motor (longitudinal gear drive)

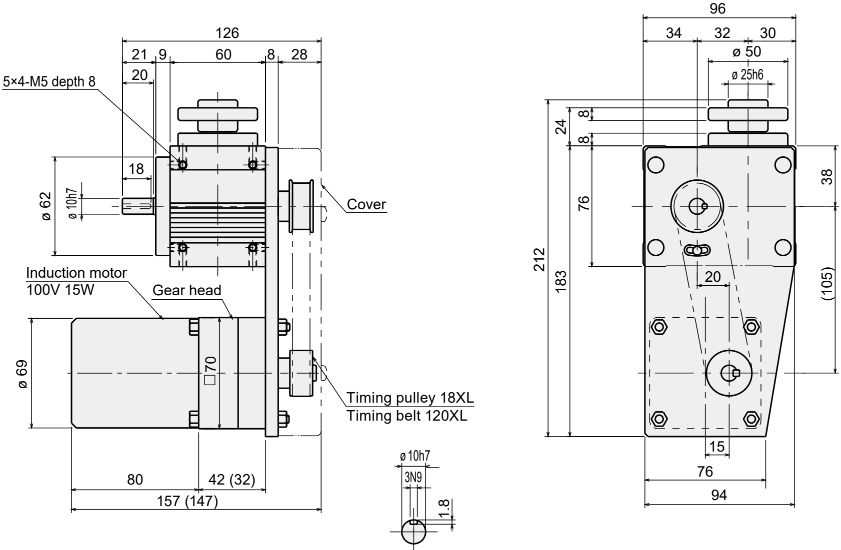

Dimensions in ( ) are for gear head reduction ratio of 1/3 to 1/18.

RG I S 032-☐☐☐☐FA-NGNEBA☐V
RGOS 032

● Dimensions with options

Input shaft - with rotation detection cam + proximity switch

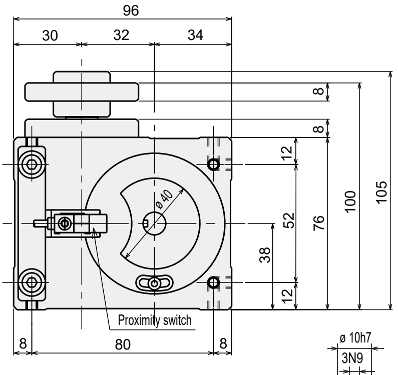

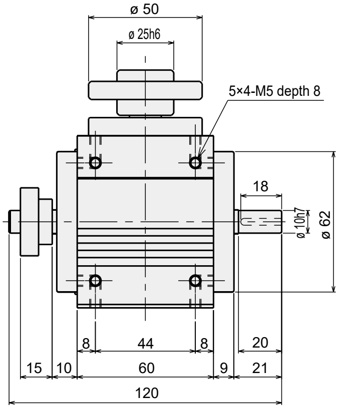

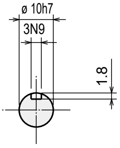

Input shaft

RG I S 032-□□□ □□□ □ □ FA-JNN
RGOS 032

●MEMO

● Common specifications

1. Installation position

For the positions of the fill/drain ports and the oil level gauge, refer to the dimensions page for each size.

Depending on the position of the index drive, the oil supply port, the drain port and the oil level gauge are to be located differently. You should choose one of the correct orientations from (1) to (6).

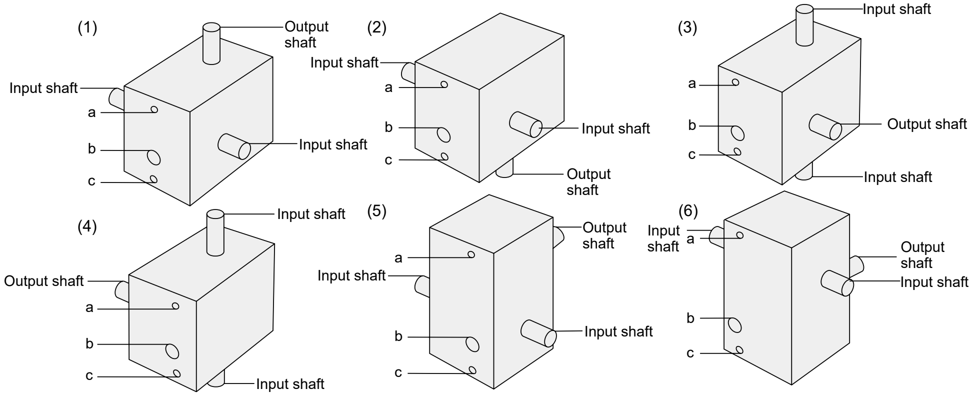

a: Oil supply port b: Oil level gauge c: Drain port

2. Housing mounting holes: mounting holes all machined on the 6 faces of the housing.

3. Material of housing

For those with the difference between the shafts of 40, 50, 63 and 80, either Fc or Al can be chosen.

Size	Material
040 to 250	Fc
040 to 080	Aℓ

4. Diameter of the stepped section of the input/output shaft

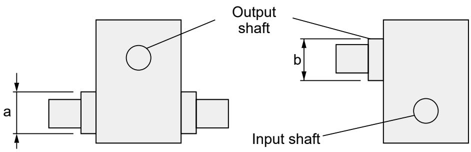

Dimensions Size	a	b
040	ø 15	ø 20
050	ø 17	ø 25
063	ø 25	ø 30
080	ø 28	ø 32
110	ø 32	ø 42
140	ø 42	ø 55
180	ø 55	ø 70
250	ø 70	ø 90

5. Hollow flange shaft model (custom order)

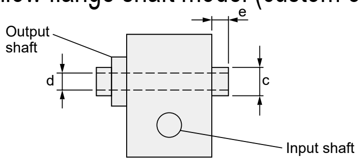

Dimensions Size	c	d	e
080	ø 25	ø 12	5
110	ø 30	ø 16	5
140	ø 40	ø 20	5
180	ø 55	ø 30	5
250	ø 80	ø 45	5

* For the installation position (6), please contact CKD.

6. Output shaft (flange shaft) positioning pin hole dimensions (custom order)

When positioning pin holes are to be added to the output shaft, the dimensions should be as follows:

Size	050	063	080	110	140
Pitch	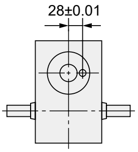	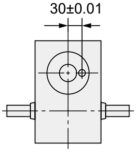	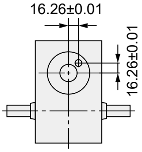	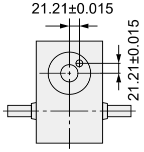	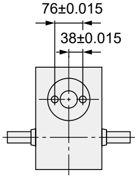
Reference hole	ø 8H7 penetrating Effective length 12	ø 8H7 penetrating Effective length 12	ø8H7 depth 15 (P.C.D 46)	ø10H7 depth 20 (P.C.D 60)	2-ø13H7 depth 25

Size	180	250
Pitch	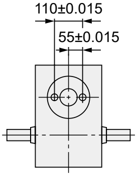	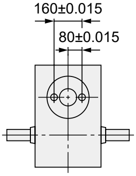
Reference hole	2-ø16H7 depth 30	2-ø20H7 depth 30

7. Housing dowel pin hole dimensions (custom order)

When housing dowel pin holes are to be added, the dimensions should be as follows:

Note: For aluminum housing, contact CKD.

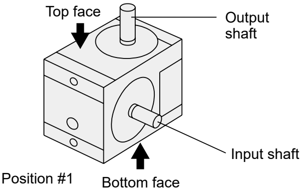

Size	040	050	063	080	110	140	180
Top face		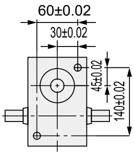	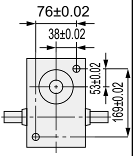	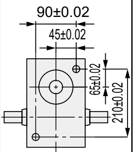	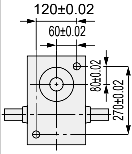	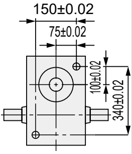	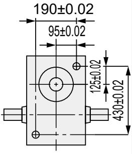
Bottom face	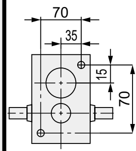	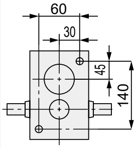	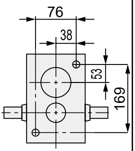	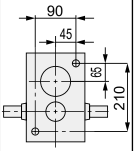	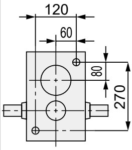	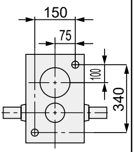	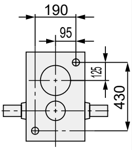
Standard Hole diameter	2-ø6H7 depth 8	2-ø8H7 depth 10	2-ø8H7 depth 10	2-ø8H7 depth 10	2-ø10H7 depth 10	2-ø13H7 depth 8	2-ø13H7 depth 10

* For the tolerance of positioning pins on the lower face, contact CKD.

8. Optional worm reducer

Standard worm reducers

Main model No.		HO reducer Size	Reduction ratio Value in ( ) represents the special reduction ratio	TE reducer Size	Reduction ratio
RGIS	040	HO 32	1/20, 1/40, 1/60 (1/30, 1/50)		
	050	HO 32	1/20, 1/40, 1/60 (1/30, 1/50)	TE 35	1/10, 1/20, 1/30 1/40, 1/50, 1/60
	063	HO 40	1/20, 1/40, 1/60 (1/30, 1/50)	TE 42	1/10, 1/20, 1/30 1/40, 1/50, 1/60
RGOS	080	HO 50	1/20, 1/30, 1/40 1/50, 1/60	TE 51	1/10, 1/20, 1/30 1/40, 1/50, 1/60
	110	HO 60	1/20, 1/30, 1/40 1/50, 1/60	TE 63	1/10, 1/20, 1/30 1/40, 1/50, 1/60
RGCS	140	HO 80	1/20, 1/30, 1/40 1/50, 1/60	TE 80	1/10, 1/20, 1/30 1/40, 1/50, 1/60
	180	HO100	1/20, 1/30, 1/40 1/50, 1/60	TE100	1/10, 1/20, 1/30 1/40, 1/50, 1/60
	250	HO135	1/20, 1/40, 1/60 (1/30, 1/50)	TE150	1/10, 1/20, 1/30 1/40, 1/50, 1/60

* The above indicates the combinations of standard installations. Check the reducer load torque (Ter) and the reducer rated output torque before use.

9. About the options (motor)

Manufacturers specify the approximate service life for optional components as below. Depending on the operating frequency, a component may reach its service life quickly. Set up the maintenance schedule referring to the following service life.

Service life suggested by the manufacturers of optional components.

Options	Approx. service life	Manufacturer
Motor with brake, Motor with C/B	2,000,000 operating cycles	Oriental Motors

10. Option/ With Gear head + motor (Made by Oriental Motors)

List of gear head + motor installation

Main model No.		RGIS RGOS RGCS	040	040 050	050 063	063
Motor specification	Motor output		25W	40W	60W	90W
	Induction	Single-phase 100 V	○	○	○	○
		Single-phase 200V	○	○	○	○
		3-phase 200 V	○	○	○	○
	Reversible	Single-phase 100 V	○	○	○	○
		Single-phase 200V	○	○	○	○
	With Electromagnetic brake	Single-phase 100 V	○	○	○	○
		Single-phase 200V	○	○	○	○
		3-phase 200 V	○	○	○	○
	With C/B	Single-phase 100 V	◎	◎	◎	◎
		Single-phase 200V	○	○	○	○
		3-phase 200 V	○	○	○	○
Gear head reduction ratio			1/3, 1/3.6, 1/5, 1/6, 1/7.5, 1/9, 1/12.5 1/15, 1/18, 1/25, 1/30, 1/36, 1/50, 1/60 1/75, 1/90, 1/100, 1/120, 1/150, 1/180			
Gear housing reduction ratio			1/1			

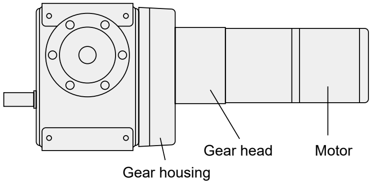

* For the belt driving system, contact CKD.

◎··· Standard (Given in external dimensions)
○··· Semi standard

Note: Electronic brake circuit is required when intermittently driven with an induction motor. Purchase a brake pack manufactured by Oriental Motor Company separately.

Note: Calculate the motor capacity when you select a unit.

11.Optional single-turn detection cam on the input shaft + proximity switch

Proximity switch model No.

Body Shaft interval	SW model No.	Manufacturer
040 to 110	E2S-Q23	OMRON
140 to 250	E2E-X2E1	

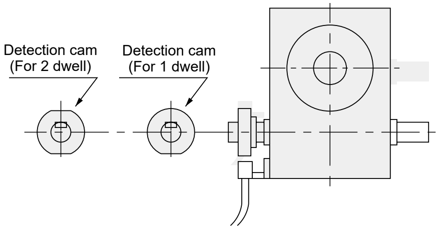

12.Optional torque saver (TSF4 to TSF18) Torque guard (TGX20 to TGX70) + release detection proximity switch

Proximity switch model No.

Torque saver Torque guard	SW model No.	Manufacturer
TSF4	TL-W3MC1	OMRON
TSF5 to TSF18	TL-W5MC1	
TGX20 to TGX70		

Roller gear cam drive

Standard

1. Standard model No. Index series

RGIS **080** – **006** **120** **S** **1** **S** **1**

A B C D E F G H

A Model	B Shaft interval		C Indexing number (n)		D Total index angle (θt)		E Cam curve		F Cam helix direction/dwell No.	
RGIS	040	40 mm	002	2	090	90°	S	MS curve	1	Left helix/1 dwell
	050	50 mm	003	3	120	120°		(Standard)	2	Left helix/2 dwell
	063	63 mm	004	4	150	150°	C	MC curve	3	Left helix/3 dwell
	080	80 mm	005	5	180	180°		(MCV50)	4	Left helix/4 dwell
	110	110 mm	006	6	210	210°	T	MT curve		
	140	140 mm	008	8	240	240°			5	Right helix/1 dwell
	180	180 mm	009	9	270	270°			6	Right helix/2 dwell
	250	250 mm	010	10	300	300°			7	Right helix/3 dwell
			012	12	330	330°			8	Right helix/4 dwell
			015	15						
			016	16						
			018	18						
			020	20						
			024	24						
			030	30						
			032	32						
			036	36						
			040	40						
			048	48						

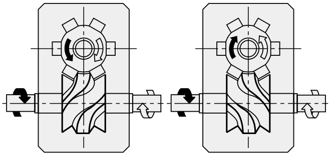

Left helix (Standard)   Right helix

For details of the timing chart, refer to B-7.

Example of model No. (1)

RGIS063-008270S5F1

Shaft interval ....63 mm
Index number 8
Total index angle ....270°
Cam curve ....MS curve
Cam helix direction/dwell No. ....Right helix/1 dwell
Shape of the output shaft ....Flange
Installation position and the material of housing ....Position #1 and Fc housing

Ⓖ Shape of the output shaft	
S	Straight
F	Flange * When a torque saver (optional) is installed, the code will be S.

Ⓗ Installation position and the material of housing	
1	Position #1/Fc housing
2	Position #2/Fc housing
3	Position #3/Fc housing
4	Position #4/Fc housing
5	Position #5/Fc housing
6	Position #6/Fc housing
A	Position #1/Al housing
B	Position #2/Al housing
C	Position #3/Al housing
D	Position #4/Al housing
E	Position #5/Al housing
F	Position #6/Al housing
	* Fc housing comes as standard. For Aluminum housing specifications, the optional specifications for the shaft interval are between 40 and 80 mm. (Consult the delivery schedule with us.)

■Position #1

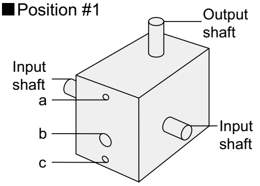

■Position #2

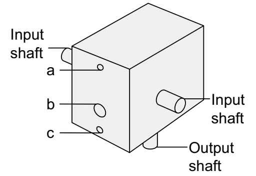

■Position #3

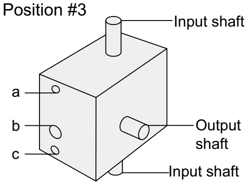

■Position #4

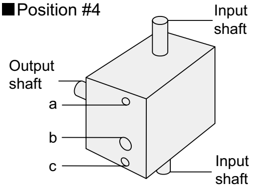

■Position #5

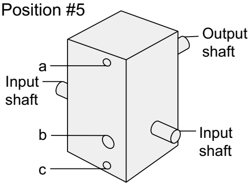

■Position #6

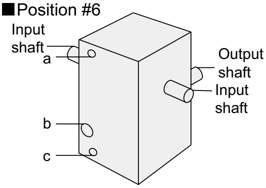

a: Oil supply port　b: Oil level gauge　c: Drain port

Example of model No. (2)

RGIS110-024090S2S5

Shaft interval	110 mm
Index number	24
Total index angle	90° (45° × 2)
Cam curve	MS curve
Cam helix direction/dwell No.	Left helix/2 dwell
Shape of the output shaft	Straight
Installation position and the material of housing	Position #5 and Fc housing

Roller gear cam drive

Standard

2-1. Model No. with options

Common for index, oscillating, reducer series

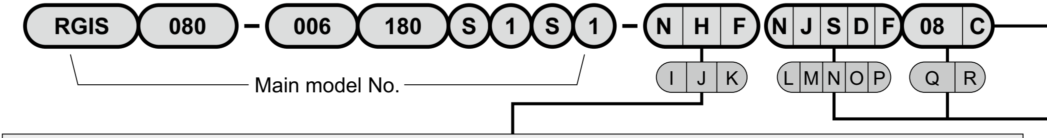

Input/Output shaft specification code

Ⓘ Input shaft specification code (left shaft)

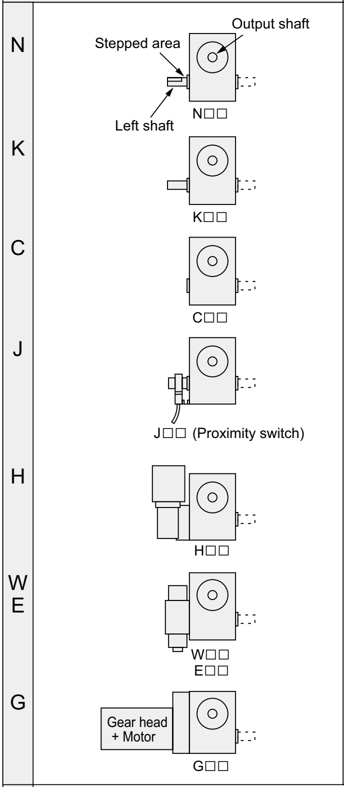

Ⓙ Input shaft specification code (right shaft)

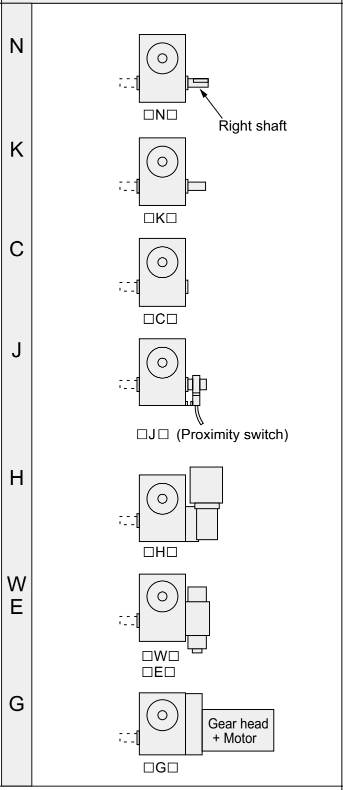

Ⓚ Output shaft specification code

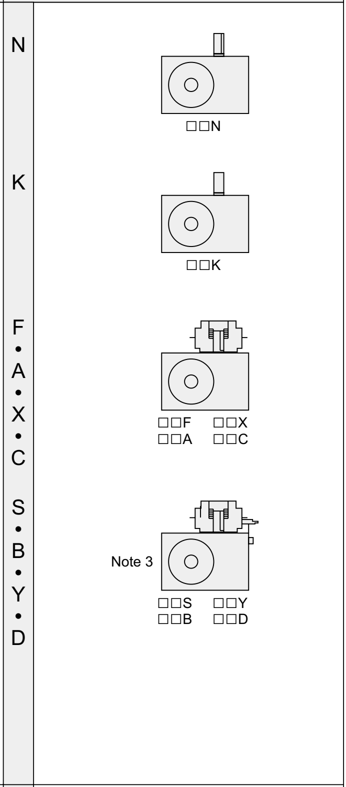

N	Standard (with keyway)
K	No keyway
C	Cutoff * This is cut off at the stepped spot. It will protrude from the housing. Verify the dimensions with the diagram.
J	Input shaft - with rotation detection cam + proximity switch (1 station) * Double or higher are custom order items. (When the input shaft is rotated in both directions, double may be required.) * The proximity switch detects 2 spots for the 2 dwell setup (including oscillation). If the dwell No. is 3 or greater, a custom order is required.
H	With the hollow shaft geared motor * Since the specification for the motor is required, determine "Hollow shaft geared motor installation specification code."
W E	With the worm reducer (W: HO reducer, E: TE reducer) * Since the specification for the worm reducer is required, determine "Worm reducer installation specification code."
G	Gear head + motor * Since the specifications for the gear head and the motor are required, determine "Gear head and motor installation specification code."

N	Standard (with keyway)
K	No keyway (straight shaft)
F	With Torque saver (TSF)
A	With Torque saver (TSF) (Output shaft without keyway)
X	With Torque guard (TGX)
C	With Torque guard (TGX) (Output shaft without keyway)
S	With Torque saver (TSF) + proximity switch for release detection
B	With Torque saver (TSF) + proximity switch for release detection (without keyway on the output shaft)
Y	With Torque guard (TGX) + proximity switch for release detection
D	With Torque guard (TGX) + proximity switch for release detection (without keyway on the output shaft)

Since the specifications for a torque saver and a torque guard are required when F, A, X, C, S, B, Y, or D is selected, determine "Torque saver/guard installation specification code."

▼ When a torque saver and a torque guard are installed

(Refer to next page)

▼ Installation specification code of the hollow shaft geared motor

* Refer to pages D-621 to D-624.

Ⓛ Motor type		Ⓜ Motor output		Application index size	Ⓝ Rated voltage		Ⓞ Reduction ratio	Ⓟ Driving method	
G	Hypoid Gear	G	0.1 kW	050	S	Three-phase 200 V	For the reducer codes, refer to the following table	F	Face Mount
		H	0.2 kW						
		H	0.2 kW	063					
		J	0.4 kW						
		J	0.4 kW	080					
		K	0.75 kW						
		K	0.75 kW	110					
		L	1.5 kW						
		L	1.5 kW	140					
T		M	2.2 kW						
S	Helical Worm gear	M	2.2 kW	180					
		N	3.7 kW						
		P	5.5 kW	250					
		Q	7.5 kW						

Ⓛ G:Nissei T:Tsubaki Emerson S:SEW

▼ Table of the combinations of motor output and reduction ratio

Ⓜ Motor output			Ⓞ Reduction ratio											
		Size	A	B	C	D	E	F	G	H	J	K	L	M
G	0.1 kW	050	–	–	1/20	1/25	1/30	1/40	1/50	1/60				
H	0.2 kW		1/10	1/15	1/20	1/25	1/30	1/40	1/50	1/60				
H	0.2 kW	063	–	–	1/20	1/25	1/30	1/40	1/50	1/60				
J	0.4 kW		1/10	1/15	1/20	1/25	1/30	1/40	1/50	1/60				
J	0.4 kW	080	–	–	1/20	1/25	1/30	1/40	1/50	1/60				
K	0.75 kW		1/10	1/15	1/20	1/25	1/30	1/40	1/50	1/60				
K	0.75 kW	110	–	–	1/20	1/25	1/30	1/40	1/50	1/60				
L	1.5 kW		1/10	1/15	1/20	1/25	1/30	1/40	1/50	1/60				
L	1.5 kW	140	–	–	1/20	1/25	1/30	1/40	1/50	1/60				
M	2.2 kW		1/10	1/15	1/20	1/25	1/30	1/40	1/49.286	1/60				
M	2.2 kW	180	1/20.37	1/23.33	1/26.93	1/29.63	1/34.80	1/36.85	1/41.89	1/46.40				
N	3.7 kW		1/12.07	1/15.28	1/20.99	1/25.07	1/28.41	1/32.38	1/35.94	1/41.07	1/43.33	1/49.38	1/53.87	1/56.92
P	5.5 kW	250	1/19.70	1/25.50	1/31.43	1/34.96	1/39.10	1/44.03	1/47.91	1/57.00				
Q	7.5 kW		1/10.93	1/15.64	1/19.70	1/25.50	1/31.43	1/34.96	1/39.10	1/44.03				

* The above indicates the combinations of standard installations.

Use this after verifying the motor capacity (Pe), the allowable output shaft torque (Trr), the load torque of the geared motor (Ter).

▼ When a worm reducer is installed

(Refer to next page)

▼ When a gear head and a motor are installed

(Refer to next page)

Roller gear cam drive

Standard

2-1. Model No. with options

Common for index, oscillating, reducer series

RGIS 080 – 006 180 S 1 S 1 – N W F 0 5 6 Y G 08 C

Main model No.

I J K L M N O P Q R

▼ When a worm reducer is installed

Ⓛ Ⓜ Ⓝ Ⓞ Ⓟ	Worm reducer installation specification code					
Ⓛ Ⓜ Reducer size		Ⓝ Reduction ratio		Ⓞ Clutch Brake:		Ⓟ Mounting direction
03	HO32, TE35	1	1/10 (TE reducer only)	Y	Clutch Brake: Yes	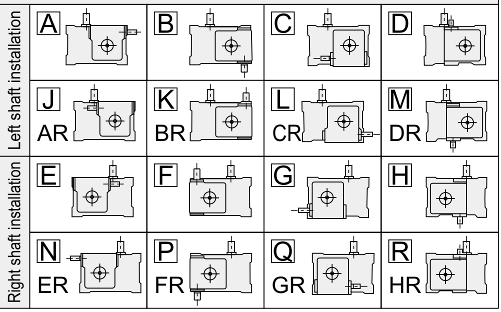
04	HO40, TE42	2	1/20			
05	HO50, TE51	3	1/30			
06	HO60, TE63	4	1/40	N	Clutch Brake: No	
08	HO80, TE80	5	1/50			
10	HO100, TE100	6	1/60			
13	HO135, —					
15	—, TE150		* Those of 1/30 and 1/50 for HO32, HO40 and HO135 have special ratio. Verify the delivery schedule.			
	* Refer to D-551 to 588.					

▼ When a gear head and a motor are installed

Ⓛ Ⓜ Ⓝ Ⓞ Ⓟ	Gear head + motor installation specification code										
Ⓛ Motor type		Ⓜ Motor output		Ⓝ Rated voltage		Ⓞ Gear head reduction ratio				Ⓟ Driving method	
E	Induction	C	25 W	A	Single-phase 100 V	A	1/3	L	1/30	G	Gear drive
R	Reversible	D	40 W			B	1/3.6	M	1/36		
B	With brake	E	60 W	C	Single-phase 200 V	C	1/5	N	1/50		
C	With C/B	F	90 W			D	1/6	P	1/60		
				S	Three-phase 200 V	E	1/7.5	Q	1/75		
						F	1/9	R	1/90		
						G	1/12.5	S	1/100		
						H	1/15	T	1/120		
						J	1/18	U	1/150		
	* Refer to List of gear heads and motor installation on D-39.					K	1/25	V	1/180		

* When the reduction ratio is between 1/3 and 1/9, the input shaft rotational speed may reach 200 rpm or higher. Special specification model number is required.

▼ When a torque saver is installed

Ⓠ Ⓡ Torque saver Mounting specification code				Application Index Size
Ⓠ TSF size		Ⓡ Release Torque range		
04	TSF4	A B C D	A B C D	040
05	TSF5			040/050
06	TSF6			050/063
08	TSF8			080
11	TSF11			110
14	TSF14			140
18	TSF18			180

▼ When a torque guard is installed

Ⓠ Ⓡ Torque guard Mounting specification code				Application Index Size
Ⓠ TGX size		Ⓡ Trip Torque range		
20	TGX20	L M H	LC MC HC	040/050
35	TGX35			063
50	TGX50			080
70	TGX70			110

* While a torque saver/guard is installed onto the output shaft and when none of the worm reducer, the gear head & motor and the hollow shaft geared motor can be installed onto the input shaft, insert a hyphen "-" at Ⓛ and continue with the torque saver/guard installation specification code.
Example: RGIS080-006270S1S1-NNF-08D
RGIS110-008180S1S1-NNX-70L

* For a specification of index number n exceeding 12, a suitable release torque may not be configured if a torque saver/guard is installed. Verify this when you select a model.

* When you specify the release (trip) torque of a torque saver/guard, notify CKD of the value. Otherwise, the product will be shipped adjusted at the min. value within the adjusting range.
(Refer to D-589 to 619.)

* The proximity switch for release detection of a torque saver/guard is the NO type. An NC type is also available.

Standard

2-2. Examples of model numbers with options / 3. Custom specification model No.

When you place an order with a model number, ensure that it exactly matches what you ordered. Even if 1 letter is incorrectly written, the product will be different with different specifications.
In order for us to deliver what you really want, carefully determine the model number referring to the following examples.

Example of model No. (3)

RGIS110-016090S1S5-NJN
Input shaft specification
  Left shaft: Standard
  Right shaft: Input shaft - with rotation detection cam + proximity switch (1 station)
Output shaft specification
  Standard

Example of model No. (4)

RGIS180-008270S1S1-WNN104YL
Input shaft specification
  Left shaft: Worm reducer installed
  Right shaft: Standard
Output shaft specification: Standard

Worm reducer installation specification
  Reducer size: HO100
  Reduction ratio: 1/40
  Clutch/Brake: Yes
  Mounting direction: L

Example of model No. (5)

RGIS040-004270S1S1-NNS-04B
Input shaft specification
  Left shaft: Standard
  Right shaft: Standard
Output shaft specification: Torque saver + Proximity switch for release detection installed
Torque saver mounting specification
  TSF size: TSF4
  Release torque range: B

Example of model No. (6)

RGIS063-008270S1SA-JWF046YG06C
Input shaft specification
  Left shaft: Input shaft - with rotation detection cam + proximity switch (1 station)
  Right shaft: Worm reducer installed
Output shaft specification: Torque saver installed

Worm reducer installation specification
  Reducer size: HO40
  Reduction ratio: 1/60
  Clutch/Brake: Yes
  Mounting direction: G

Torque saver mounting specification
  TSF size: TSF6
  Release torque range: C

● Special specification model number Common for index, oscillating, reducer series

RGIS **080** – **006** **180** **S** **1** **S** **1** – **X012345**

Main model No. | Special specification No.

* Add "-X (6 digit number)" after the main model No. as the special specification number.
The special specification model number shall be determined after the consultation with the customer.
Options other than the standard are available upon request. Please provide CKD with the specifications.
* High speed specifications (input shaft rotational speed of 200 rpm or higher) are deemed to be special specifications.

Roller gear cam drive

Standard

1. Standard model No. Oscillating series

RGOS 063 – 090 300 S T S 1

Ⓐ Ⓑ Ⓒ Ⓓ Ⓔ Ⓕ Ⓖ Ⓗ

Ⓐ Model	Ⓑ Shaft interval		Ⓒ Oscillating angle (ψ)		Ⓓ Total index angle (θt)		Ⓔ Cam curve		Ⓕ Orbit pattern	
RGOS	040	40 mm	120	120°	180	180° (90°×2)	S	MS curve (Standard)	T (Standard)	When the input shaft starts to rotate from the rotation reference point, the output shaft rotates in sequence from 1 and 2 as in the figure. 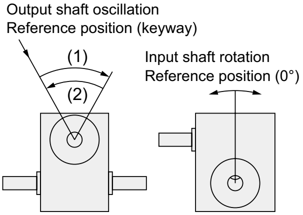
	050	50 mm	090	90°	240	240° (120°×2)	C	MC curve (MCV50)		
	063	63 mm	060	60°	300	300° (150°×2)	T	MT curve		
	080	80 mm	045	45°	360	360° (180°×2)				
	110	110 mm	030	30°						
	140	140 mm								
	180	180 mm								
	250	250 mm								
									S	When the input shaft starts to rotate from the rotation reference point, the output shaft rotates in sequence from 1 and 2 as in the figure. 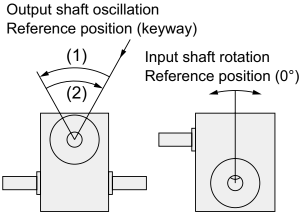

For details of the timing chart, refer to B-7.

Example of model No. (1)

RGOS110-045180STS1

Shaft interval .... 110 mm
Oscillating angle .... 45°
Total index angle .... 180° (90° × 2)
Cam curve .... MS curve
Orbit pattern .... T
Shape of the output shaft .... Straight
Installation position and the material of housing .... Position #1 and Fc housing

Ⓖ	Shape of the output shaft	Ⓗ	Installation position and the material of housing
S	Straight	1	Position #1/Fc housing
F	Flange	2	Position #2/Fc housing
	* When a torque saver (optional) is installed, the code will be S.	3	Position #3/Fc housing
		4	Position #4/Fc housing
		5	Position #5/Fc housing
		6	Position #6/Fc housing
		A	Position #1/Al housing
		B	Position #2/Al housing
		C	Position #3/Al housing
		D	Position #4/Al housing
		E	Position #5/Al housing
		F	Position #6/Al housing
			* Fc housing comes as standard. For Aluminum housing specifications, the optional specifications for the shaft interval are between 40 and 80 mm. (Consult the delivery schedule with CKD.)

■Position #1

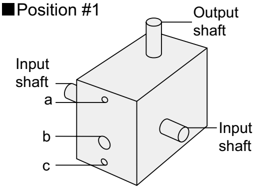

■Position #2

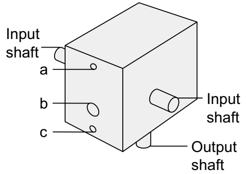

■Position #3

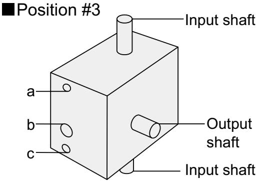

■Position #4

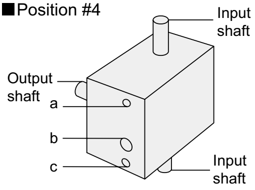

■Position #5

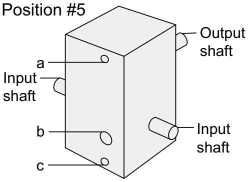

■Position #6

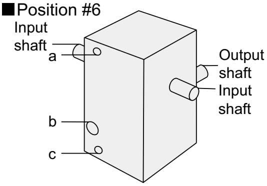

a: Oil supply port b: Oil level gauge c: Drain port

Standard

1. Standard model No. Reducer series

RGCS **040** – **010** **360** **R** **L** **S** **1**

Ⓐ Ⓑ Ⓒ Ⓓ Ⓔ Ⓕ Ⓖ Ⓗ

Ⓐ Model	Ⓑ Shaft interval		Ⓒ Reduction ratio (id)		Ⓓ Total index angle (θt)		Ⓔ Cam curve		Ⓕ Spiral direction of the cam	
RGCS	040	40 mm	003	1/3	360	360°	R	Constant velocity rotation Curve	L	Left helix
	050	50 mm	004	1/4					R	Right helix
	063	63 mm	005	1/5						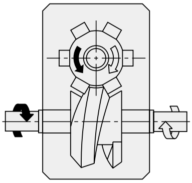 Left helix 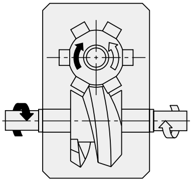 Right helix For details of the timing chart, refer to B-7.
	080	80 mm	006	1/6						
	110	110 mm	008	1/8						
	140	140 mm	009	1/9						
	180	180 mm	010	1/10						
	250	250 mm	012	1/12						

Example of model No. (1)

RGCS050-005360RRF1

Shaft interval ....50 mm
Reduction ratio 1/5
Total index angle ....360°
Cam curve ....Constant velocity rotation curve
Spiral direction of the cam ....Right helix
Shape of the output shaft ....Flange
Installation position and the material of housing ....Position #1 and Fc housing

Ⓖ	Shape of the output shaft	Ⓗ	Installation position and the material of housing
S	Straight	1	Position #1/Fc housing
F	Flange	2	Position #2/Fc housing
		3	Position #3/Fc housing
	* When a torque saver (optional) is installed, the code will be S.	4	Position #4/Fc housing
		5	Position #5/Fc housing
		6	Position #6/Fc housing

■Position #1

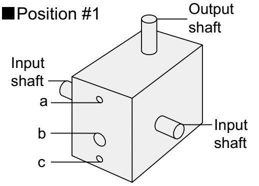

■Position #2

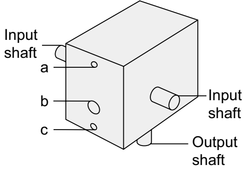

■Position #3

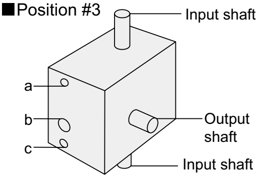

■Position #4

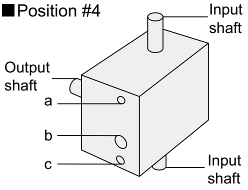

■Position #5

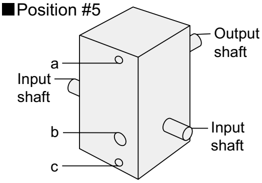

■Position #6

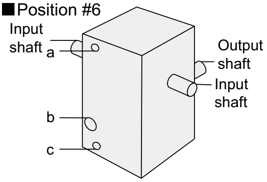

a: Oil supply port b: Oil level gauge c: Drain port

Difference between shafts: **40** mm Straight shaft

Standard

Index	**RG I S 040**
Oscillator	**RGOS 040**
Reducer	**RGCS 040**

● Standard specifications

Dimensions

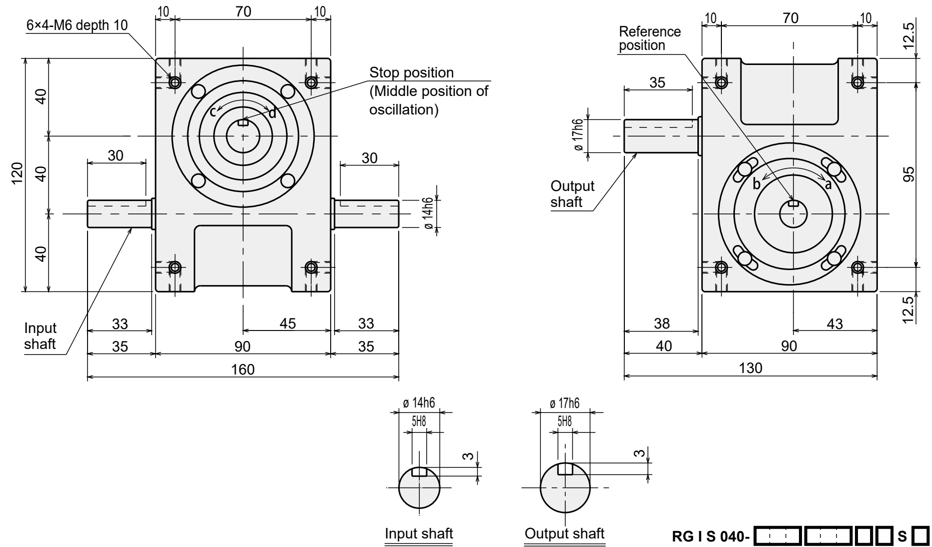

RG I S 040-☐☐☐☐**S**☐
RGOS 040
RGCS 040

● Oil fill/drain port (Rc 1/4) ○ Oil level gauge
Orientations 1 to 4 (ø20)
Orientations 5 to 6 (ø30)

Installation position and oil supply/drain port and oil level gauge positions

Installation position	1	2	3
Series	RGIS/RGOS/RGCS	RGIS/RGOS/RGCS	RGIS/RGOS/RGCS
Dimensions	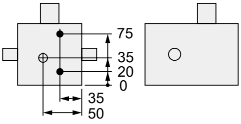 75 35 20 0 35 50	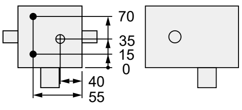 70 35 15 0 40 55	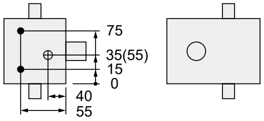 75 35(55) 15 0 40 55 The dimensions in ( ) are for RGOS.

Installation position	4	5	6
Series	RGIS/RGOS/RGCS	RGIS/RGOS/RGCS	RGIS/RGOS/RGCS
Dimensions	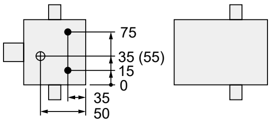 75 35 (55) 15 0 35 50 The dimensions in ( ) are for RGOS.	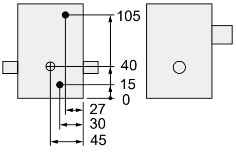 105 40 15 0 27 30 45	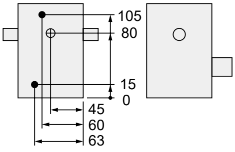 105 80 15 0 45 60 63

Characteristics

Values in parenthesis ( ) represents the aluminum housing data.

Descriptions	Unit	Characteristics	
		Output shaft	Input shaft
Allowable thrust force	N	1300(800)	800(500)
Allowable radial force	N	1200(700)	750(450)
Allowable bending moment	N·m	35(20)	-
Moment of inertia	kg·m^2	6.40×10^{-5}	4.61×10^{-5}

Descriptions	Unit	Characteristics
Internal frictional torque (Tin)	N·m	1.9
Product weight	kg	5(3)
Oil level	ℓ	0.1
Paint color		Silver

Accuracy

Index accuracy (sec.)		
Indexing accuracy	1 dwell	±60
	2 dwell	±120
	3 dwell	±180
	4 dwell	±240
Repeatability		30

Oscillating accuracy (sec.)	
Indexing accuracy	±120
Repeatability	30

* For dwell accuracy, please contact us.

List of index angles

Index series **RGIS 040** Cam curve / MS

	Total index angle(θt) / Index number(n)	90	120	150	180	210	240	270	300	330
1 dwell	2							○	○	○
	3				○	○	○	○	○	○
	4			○	○	○	○	○	○	○
	5		○	○	○	○	○	○	○	○
	6	○	○	○	○	○	○	○	○	○
	8	○	○	○	○	○	○	○	○	○
	9	○	○	○	○	○	○	○	○	○
	10	○	○	○	○	○	○	○	○	○
	12	○	○	○	○	○	○	○	○	○
2 dwell	16		○	○	○	○	○	○	○	○
	18		○	○	○	○	○	○	○	○
	20	○	○	○	○	○	○	○	○	○
	24	○	○	○	○	○	○	○	○	○
3 dwell	24			○	○	○	○	○	○	○
	30		○	○	○	○	○	○	○	○
	36	○	○	○	○	○	○	○	○	○
4 dwell	32				○	○	○	○	○	○
	36			○	○	○	○	○	○	○
	40			○	○	○	○	○	○	○
	48		○	○	○	○	○	○	○	○

Reducer series **RGCS 040**

Total index angle(θt) / Reduction ratio(id)	360
1/3	○
1/4	○
1/5	○
1/6	○
1/8	○
1/9	○
1/10	○
1/12	○

Oscillating series **RGOS 040** Cam curve / MS

Total index angle(θt) / Oscillating angle (ψ)	90	120	180	240	300	360
120						○
90					○	○
60			○	○	○	○
45			○	○	○	○
30			○	○	○	○

Dimensions with options

With worm reducer (with HO32-C/B)

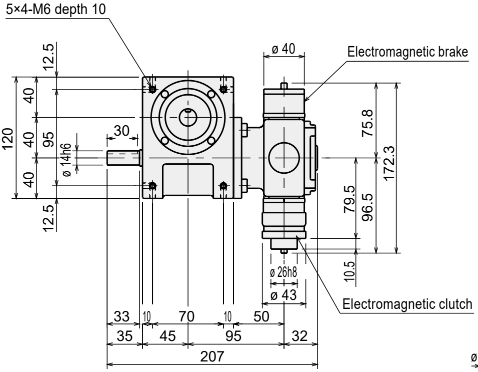

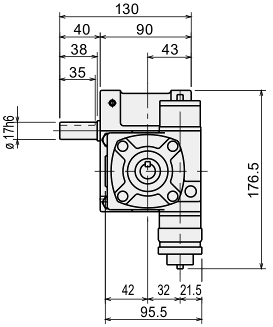

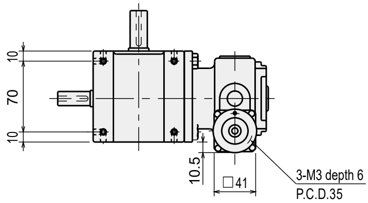

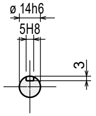

Input shaft

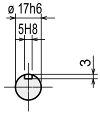

Output shaft

RG I S 040-☐☐☐☐☐☐☐☐ S ☐ -NWN03 ☐ YG
RGOS 040
RGCS 040

With worm reducer (without HO32-C/B)

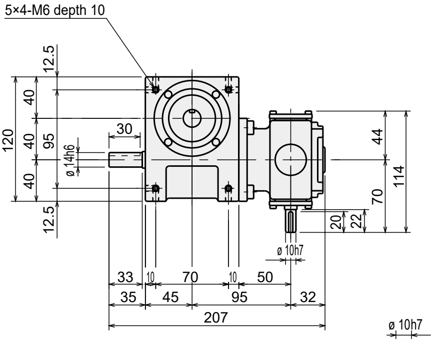

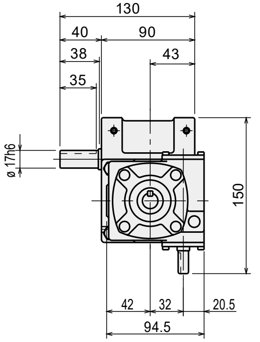

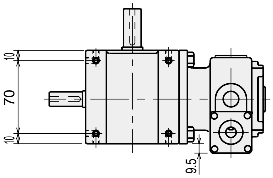

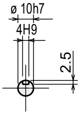

Reducer input shaft

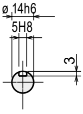

Input shaft

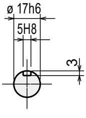

Output shaft

RG I S 040-☐☐☐☐☐☐☐☐ S ☐ -NWN03 ☐ NG
RGOS 040
RGCS 040

With Gear head + motor (25 W with C/B)

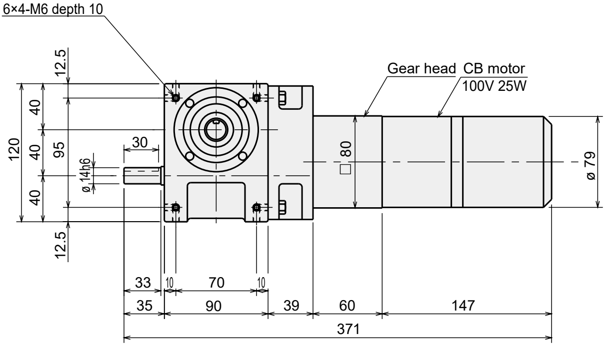

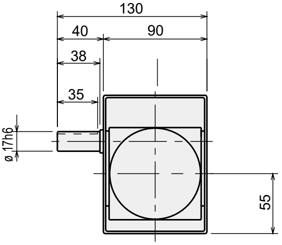

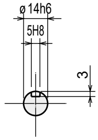

Input shaft

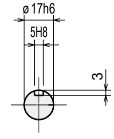

Output shaft

RG I S 040-☐☐☐☐☐☐☐☐ S ☐ -NGNCCA ☐ G
RGOS 040
RGCS 040

With Gear head + motor (40W with C/B)

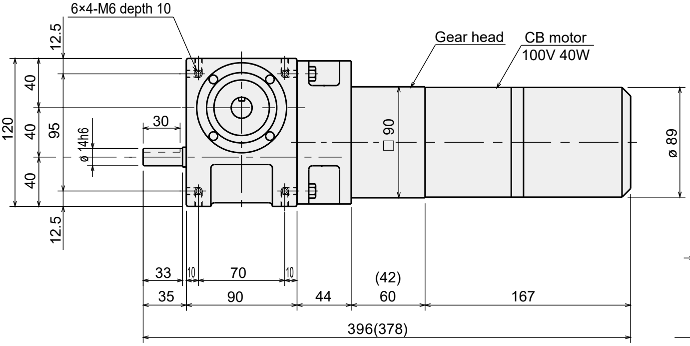

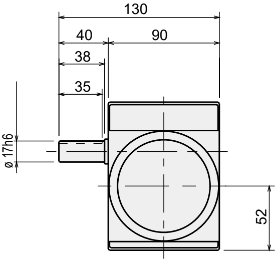

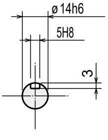

Input shaft

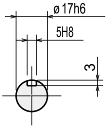

Output shaft

Dimensions in ( ) are for gear head reduction ratio of 1/3 to 1/18.

RG I S 040-☐☐☐☐☐☐☐☐ S ☐ -NGNCDA ☐ G
RGOS 040
RGCS 040

● Dimensions with options

With Torque saver (TSF4)

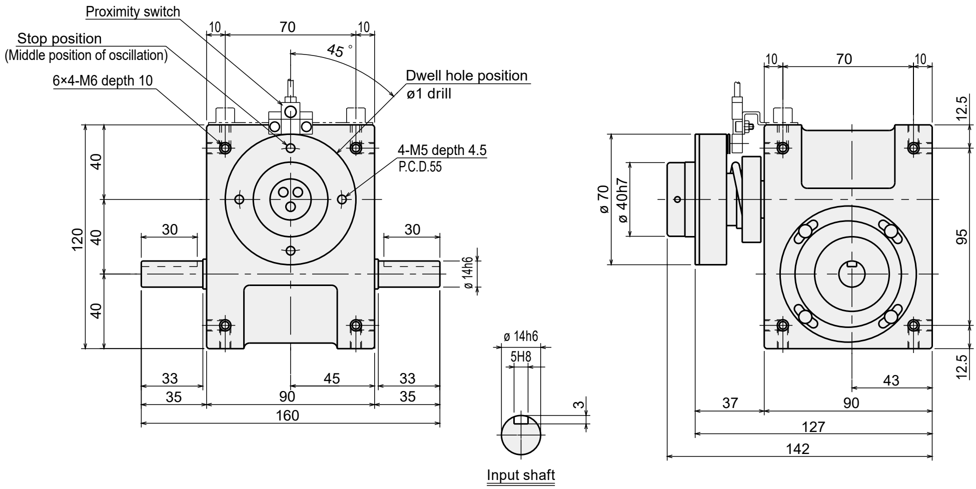

RG I S 040-☐☐☐ ☐☐☐ ☐ ☐ S ☐ -NNF-04 ☐
RGOS 040
RGCS 040

With Torque saver (TSF5)

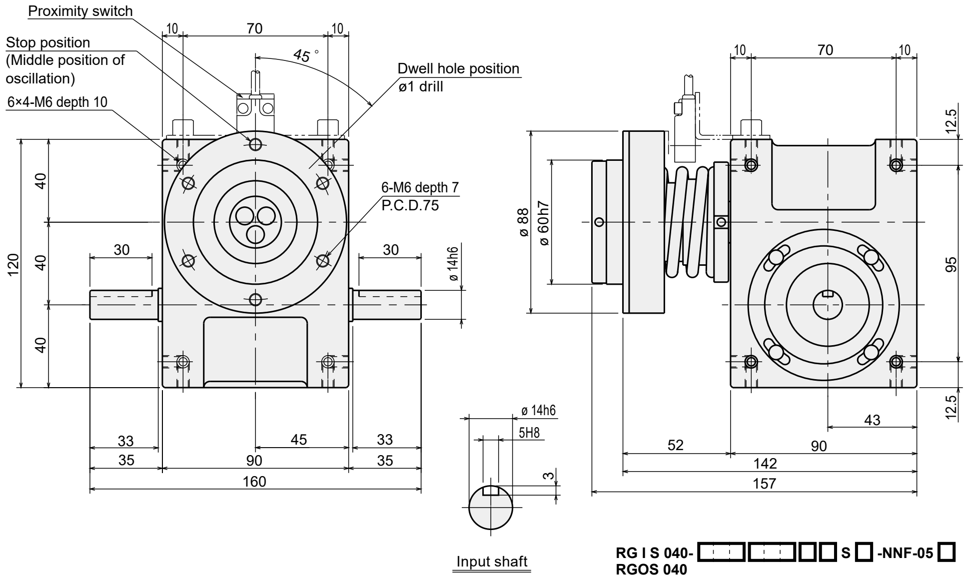

RG I S 040-☐☐☐ ☐☐☐ ☐ ☐ S ☐ -NNF-05 ☐
RGOS 040
RGCS 040

With Torque guard (TGX20)

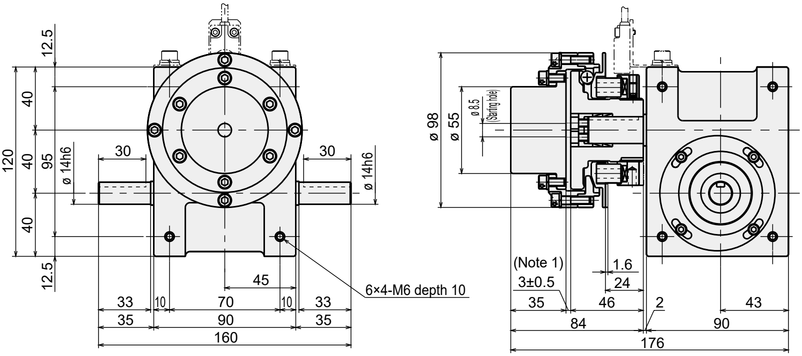

RG I S 040-☐☐☐☐ S ☐ -NNX-20 ☐
RGOS 040
RGCS 040

Note 1: Attach to the equipment within the dimensions specified.

Difference between shafts: **40** mm Flange shaft

Standard

Index	RG I S 040
Oscillator	RGOS 040
Reducer	RGCS 040

● Standard specifications

Dimensions

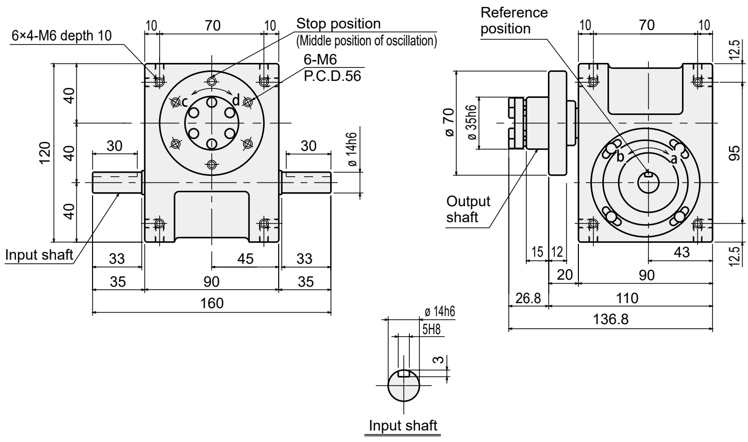

RG I S 040-☐☐☐☐**F**☐
RGOS 040
RGCS 040

● Oil fill/drain port (Rc 1/4) ○ Oil level gauge
Orientations 1 to 4(ø20)
Orientations 5 to 6(ø30)

Installation position and oil supply/drain port and oil level gauge positions

Installation position	1	2	3
Series	**RGIS/RGOS/RGCS**	**RGIS/RGOS/RGCS**	**RGIS/RGOS/RGCS**
Dimensions	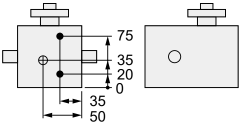	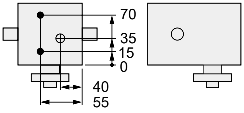	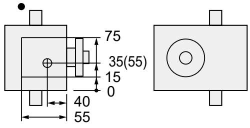 The dimensions in ( ) are for RGOS.

Installation position	4	5	6
Series	**RGIS/RGOS/RGCS**	**RGIS/RGOS/RGCS**	**RGIS/RGOS/RGCS**
Dimensions	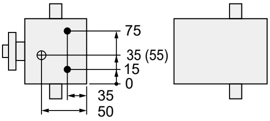 The dimensions in ( ) are for RGOS.	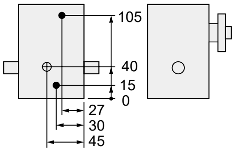	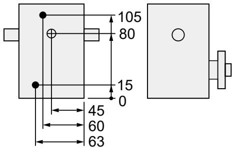

Characteristics

Values in parenthesis ( ) represents the aluminum housing data.

Descriptions	Unit	Characteristics	
		Output shaft	Input shaft
Allowable thrust force	N	1300(800)	800(500)
Allowable radial force	N	1200(700)	750(450)
Allowable bending moment	N·m	35(20)	-
Moment of inertia	kg·m^2	3.14 × 10^{-4}	4.61 × 10^{-5}

Descriptions	Unit	Characteristics
Internal frictional torque (Tin)	N·m	1.9
Product weight	kg	5(3)
Oil level	ℓ	0.1
Paint color		Silver

Accuracy

Index accuracy (sec.)		
Indexing accuracy	1 dwell	±60
	2 dwell	±120
	3 dwell	±180
	4 dwell	±240
Repeatability		30

Oscillating accuracy (sec.)	
Indexing accuracy	±120
Repeatability	30

* For dwell accuracy, please contact us.

List of index angles

Index series **RGIS 040** Cam curve / MS

	Total index angle(θt) / Index number(n)	90	120	150	180	210	240	270	300	330
1 dwell	2							○	○	○
	3				○	○	○	○	○	○
	4			○	○	○	○	○	○	○
	5		○	○	○	○	○	○	○	○
	6	○	○	○	○	○	○	○	○	○
	8	○	○	○	○	○	○	○	○	○
	9	○	○	○	○	○	○	○	○	○
	10	○	○	○	○	○	○	○	○	○
	12	○	○	○	○	○	○	○	○	○
2 dwell	16		○	○	○	○	○	○	○	○
	18		○	○	○	○	○	○	○	○
	20	○	○	○	○	○	○	○	○	○
	24	○	○	○	○	○	○	○	○	○
3 dwell	24			○	○	○	○	○	○	○
	30		○	○	○	○	○	○	○	○
	36	○	○	○	○	○	○	○	○	○
4 dwell	32				○	○	○	○	○	○
	36			○	○	○	○	○	○	○
	40			○	○	○	○	○	○	○
	48		○	○	○	○	○	○	○	○

Reducer series **RGCS 040**

Total index angle(θt) / Reduction ratio(id)	360
1/3	○
1/4	○
1/5	○
1/6	○
1/8	○
1/9	○
1/10	○
1/12	○

Oscillating series **RGOS 040** Cam curve / MS

Total index angle(θt) / Oscillating angle (ψ)	90	120	180	240	300	360
120						○
90					○	○
60			○	○	○	○
45			○	○	○	○
30			○	○	○	○

Index	**RG I S 040**
Oscillator	**RGOS 040**
Reducer	**RGCS 040**

● Dimensions with options

With worm reducer (with HO32-C/B)

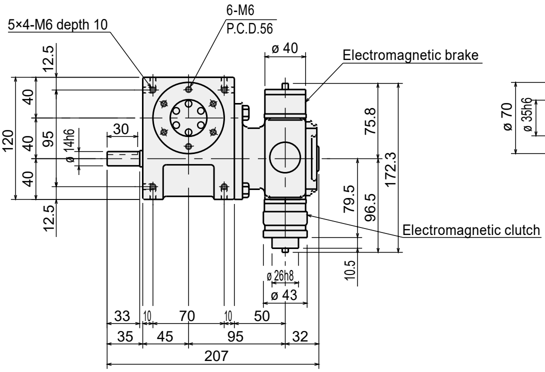

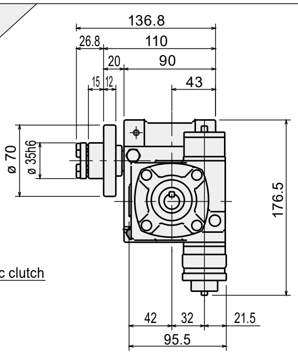

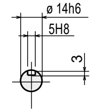

Input shaft

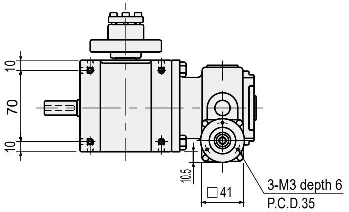

RG I S 040-☐☐☐☐F☐- NWN03☐YG
RGOS 040
RGCS 040

With worm reducer (without HO32-C/B)

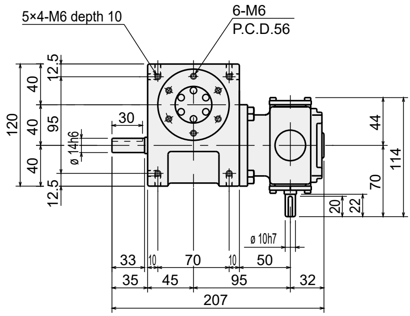

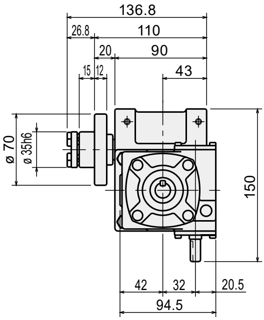

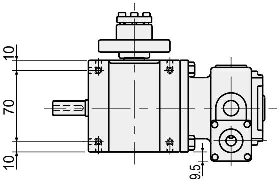

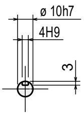

Reducer input shaft

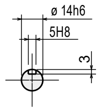

Input shaft

RG I S 040-☐☐☐☐F☐-NWN03☐NG
RGOS 040
RGCS 040

With Gear head + motor (25 W with C/B)

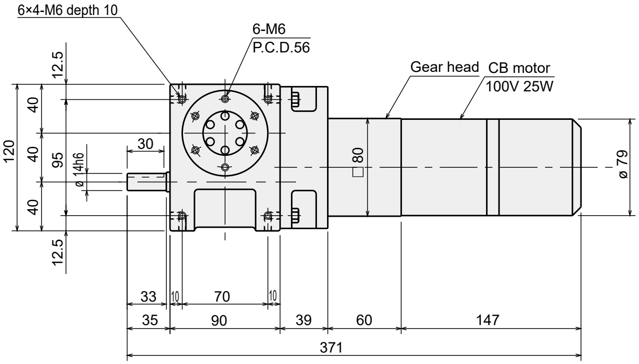

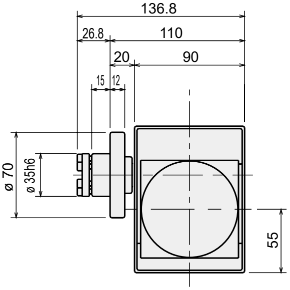

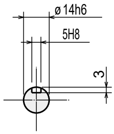

Input shaft

RG I S 040-☐☐☐☐☐☐☐☐F☐-NGNCCA☐G
RGOS 040
RGCS 040

With Gear head + motor (40W with C/B)

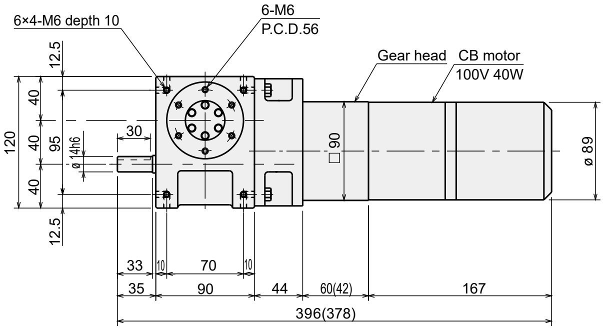

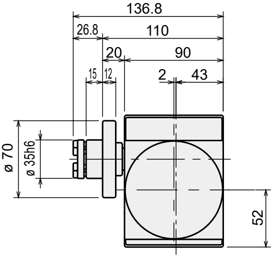

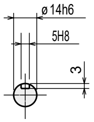

Input shaft

Dimensions in ( ) are for gear head reduction ratio of 1/3 to 1/18.

RG I S 040-☐☐☐☐☐☐☐☐F☐-NGNCDA☐G
RGOS 040
RGCS 040

Difference between shafts: **50** mm Straight shaft

Standard

Index	**RG I S 050**
Oscillator	**RGOS 050**
Reducer	**RGCS 050**

● Standard specifications

Dimensions

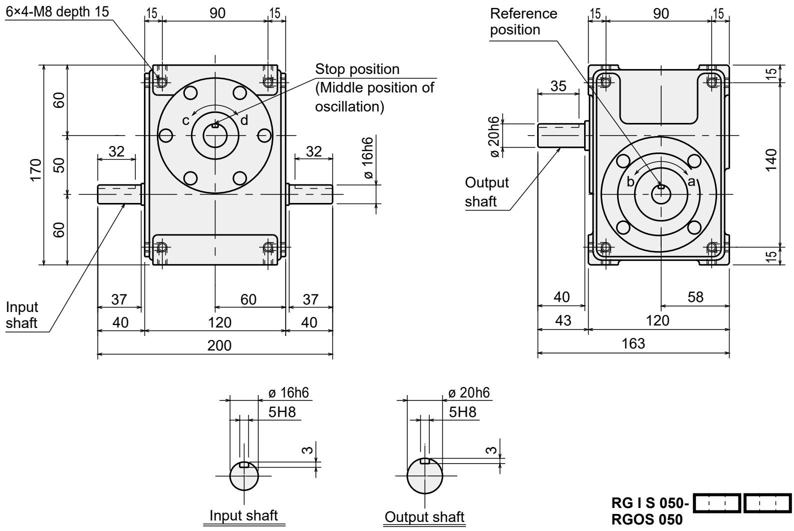

RG I S 050-☐☐☐s☐
RGOS 050
RGCS 050

Installation position and oil supply/drain port and oil level gauge positions

Installation position	1	2	3
Series	**RGIS/RGOS/RGCS**	**RGIS/RGOS/RGCS**	**RGIS/RGOS/RGCS**
Dimensions	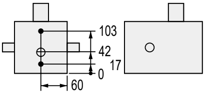	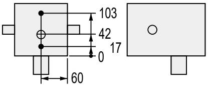	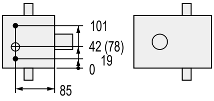 The dimensions in ( ) are for RGOS.

- ● Oil fill/drain port (Rc$^1/_4$)
- ○ Oil level gauge (ø 20)

Installation position	4	5	6	
Series	**RGIS/RGOS/RGCS**	**RGIS/RGOS/RGCS**	**RGIS/RGCS**	**RGOS**
Dimensions	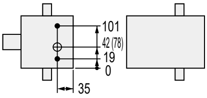 The dimensions in ( ) are for RGOS.	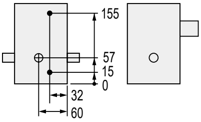	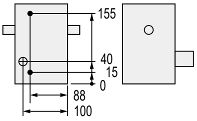	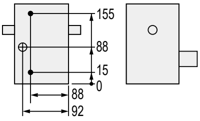

Characteristics Values in parenthesis ( ) represents the aluminum housing data.

Descriptions	Unit	Characteristics	
		Output shaft	Input shaft
Allowable thrust force	N	2200 (1300)	1200 (700)
Allowable radial force	N	2000 (1200)	900 (550)
Allowable bending moment	N·m	55(35)	-
Moment of inertia	kg·m^2	2.20 × 10^{-4}	2.57 × 10^{-4}

Descriptions	Unit	Characteristics
Internal frictional torque (Tin)	N·m	3.0
Product weight	kg	11 (7.5)
Oil level	ℓ	0.5
Paint color		Silver

Accuracy (Index number of ☆)

	Index accuracy (sec.)	
Indexing accuracy	1 dwell	±30
	2 dwell	±90
	3 dwell	±135
	4 dwell	±180
Repeatability		15

(Index number other than ☆)

	Index accuracy (sec.)	
Indexing accuracy	1 dwell	±60
	2 dwell	±120
	3 dwell	±180
	4 dwell	±240
Repeatability		30

* For the dwell accuracy, please contact CKD.

List of index angles

Index series **RGIS 050** Cam curve/MS

	Total index angle (θt) Index number (n)	90	120	150	180	210	240	270	300	330
1 dwell	☆2							○	○	○
	☆3				○	○	○	○	○	○
	☆4			○	○	○	○	○	○	○
	☆5		○	○	○	○	○	○	○	○
	☆6	○	○	○	○	○	○	○	○	○
	☆8	○	○	○	○	○	○	○	○	○
	☆9	○	○	○	○	○	○	○	○	○
	10	○	○	○	○	○	○	○	○	○
	12	○	○	○	○	○	○	○	○	○
2 dwell	☆16		○	○	○	○	○	○	○	○
	☆18		○	○	○	○	○	○	○	○
	20	○	○	○	○	○	○	○	○	○
	24	○	○	○	○	○	○	○	○	○
3 dwell	☆24			○	○	○	○	○	○	○
	30		○	○	○	○	○	○	○	○
	36	○	○	○	○	○	○	○	○	○
4 dwell	☆32				○	○	○	○	○	○
	☆36			○	○	○	○	○	○	○
	40			○	○	○	○	○	○	○
	48		○	○	○	○	○	○	○	○

Reducer series **RGCS 050**

Total index angle (θt) Reduction ratio (id)	360
1/3	○
1/4	○
1/5	○
1/6	○
1/8	○
1/9	○
1/10	○
1/12	○

Oscillating series **RGOS 050** Cam curve/MS

Total index angle (θt) Oscillating angle (ψ)	90	120	180	240	300	360
★120						○
★ 90					○	○
★ 60			○	○	○	○
★ 45			○	○	○	○
30			○	○	○	○

(Oscillating angle marked with ★)

Oscillating accuracy (sec.)	
Indexing accuracy	±90
Repeatability	15

(Oscillating angle other than ★)

Oscillating accuracy (sec.)	
Indexing accuracy	±120
Repeatability	30

* For the dwell accuracy, please contact CKD.

● Dimensions with options

With worm reducer (with HO32-C/B)

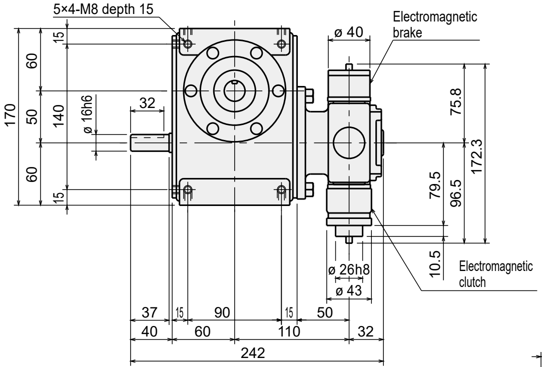

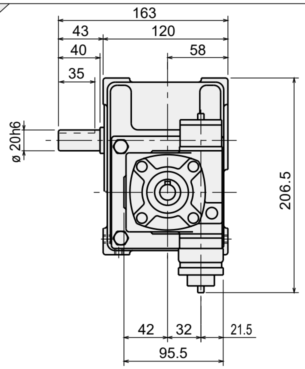

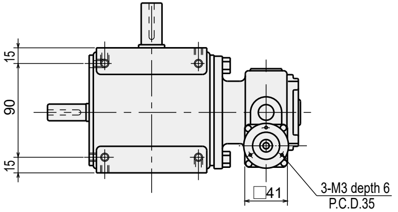

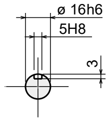

Input shaft

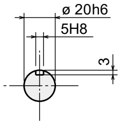

Output shaft

RG I S 050-☐☐☐☐☐☐☐☐ S ☐ -NWN03 ☐ YG
RGOS 050
RGCS 050

With worm reducer (without HO32-C/B)

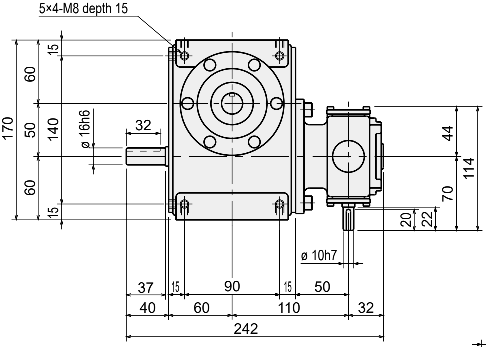

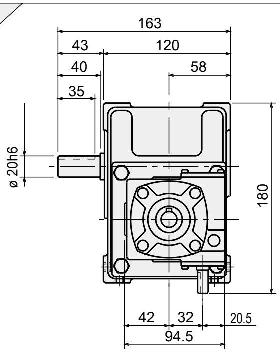

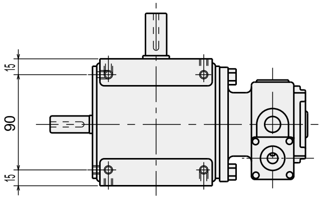

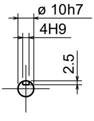

Reducer input shaft

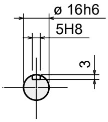

Input shaft

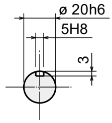

Output shaft

RG I S 050-☐☐☐☐☐☐☐☐ S ☐ -NWN03 ☐ NG
RGOS 050
RGCS 050

With Gear head + motor (40 W with C/B)

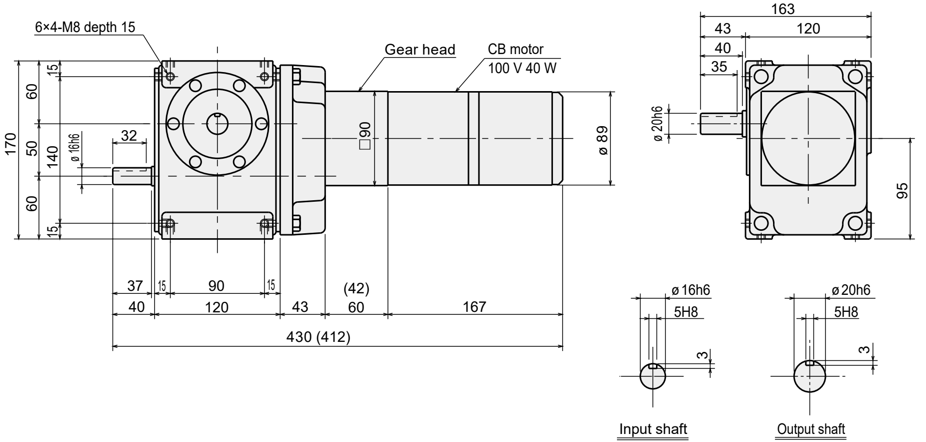

Dimensions in ( ) are for gear head reduction ratio of 1/3 to 1/18.

RG I S 050-☐☐☐☐S☐-NGNCDA☐G
RGOS 050
RGCS 050

With Gear head + motor (60 W with C/B)

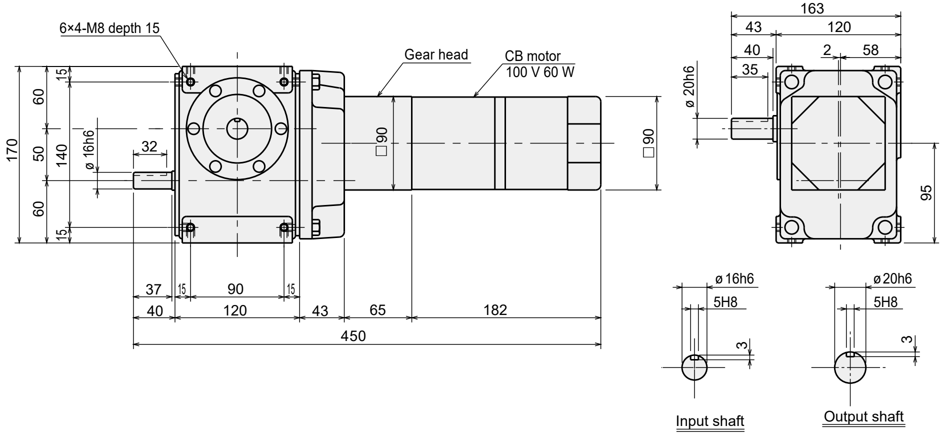

RG I S 050-☐☐☐☐S☐-NGNCEA☐G
RGOS 050
RGCS 050

Dimensions with options

With Torque saver (TSF5)

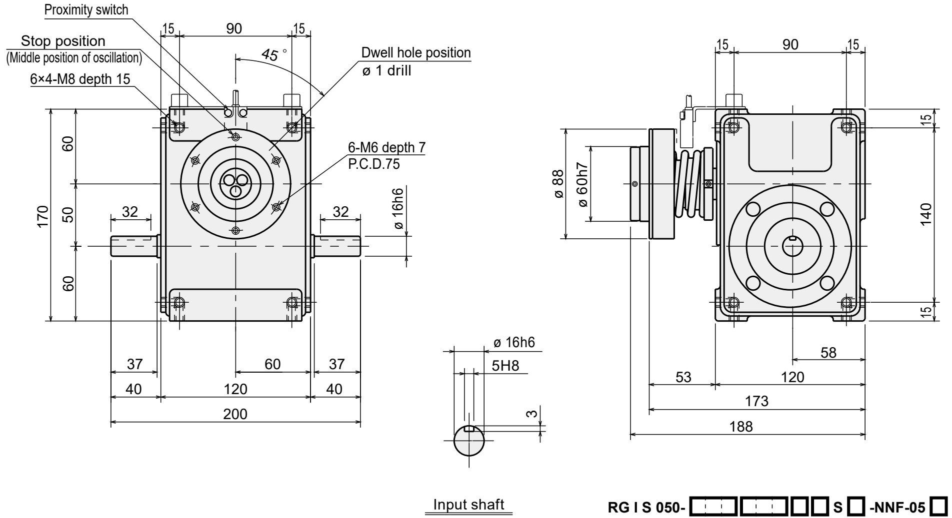

RG I S 050-☐☐☐☐☐☐☐☐ S ☐ -NNF-05 ☐
RGOS 050
RGCS 050

With Torque saver (TSF6)

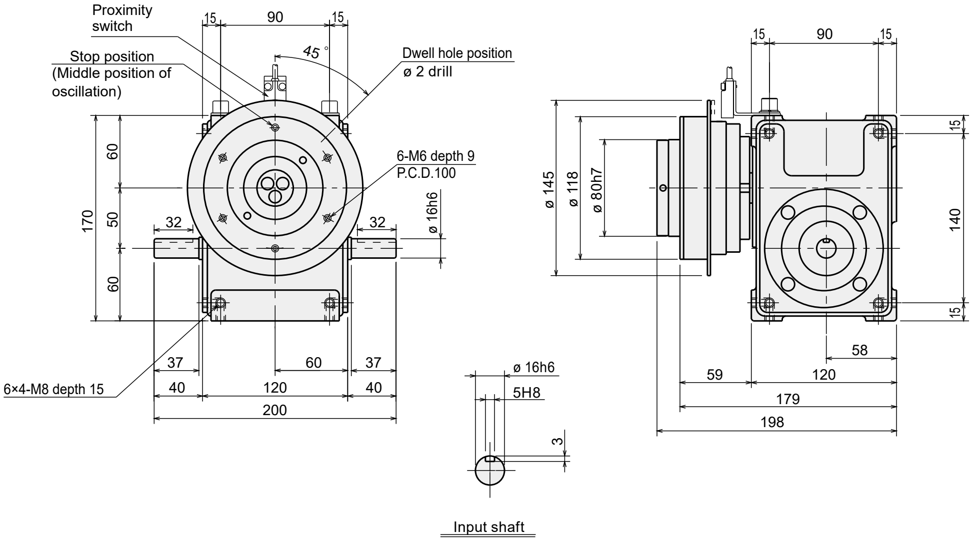

RG I S 050-☐☐☐☐☐☐☐☐ S ☐ -NNF-06 ☐
RGOS 050
RGCS 050

With Torque guard (TGX20)

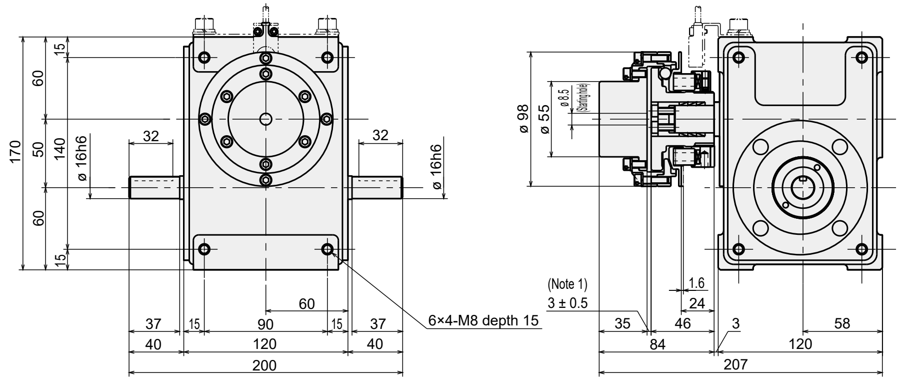

RG I S 050-☐☐☐☐ S ☐ -NNX-20 ☐
RGOS 050
RGCS 050

Note 1: Attach to the equipment within the dimensions specified.

Index	**RG I S 050**
Oscillator	**RGOS 050**
Reducer	**RGCS 050**

● Dimensions with options

With the hollow shaft geared motor (0.1 kW)

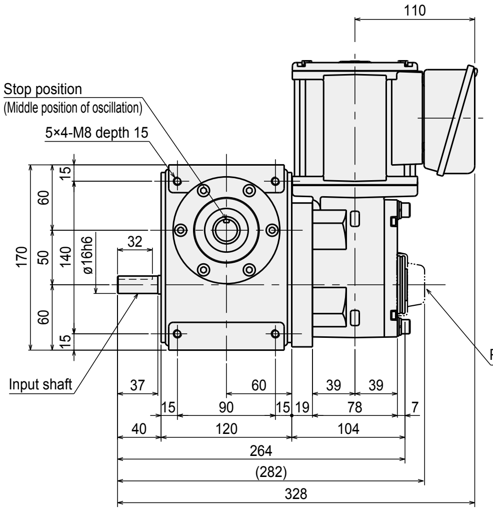

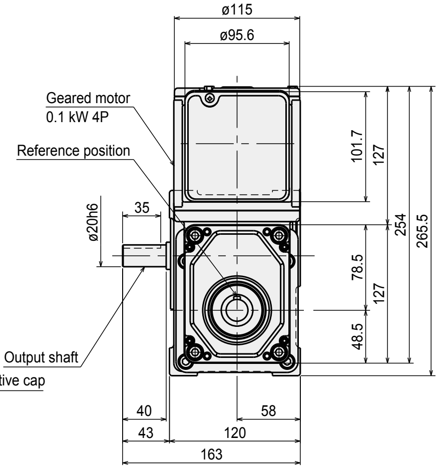

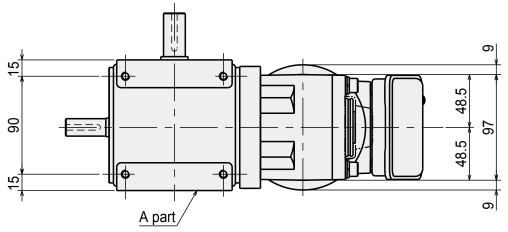

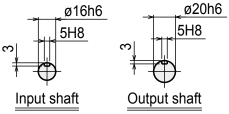

RG I S 050-☐☐☐☐S☐-NHNGGS☐F
RGOS 050
RGCS 050

*The motor may protrude from the housing end (A part).

With the hollow shaft geared motor (0.2 kW)

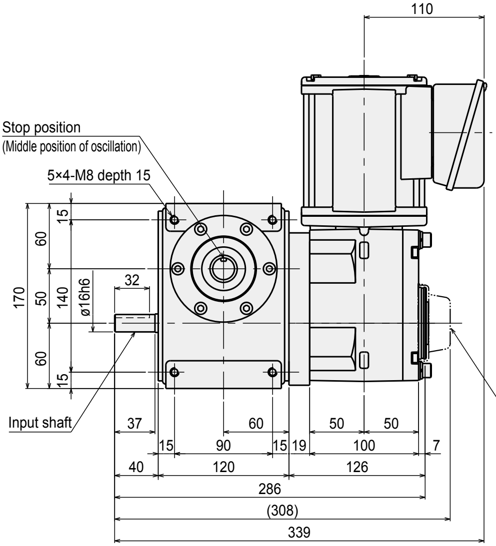

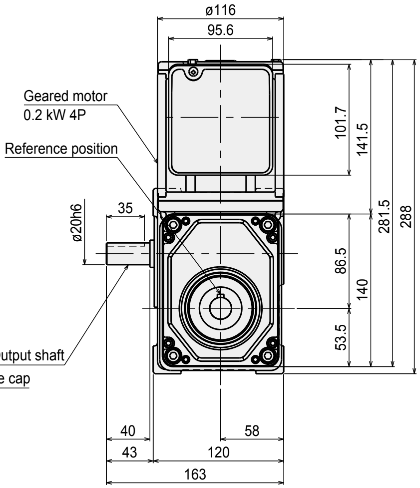

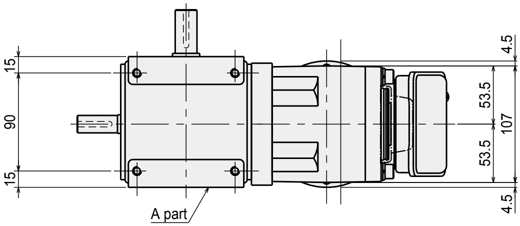

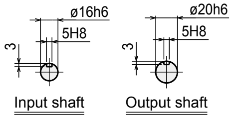

RG I S 050-☐☐☐☐S☐-NHNGHS☐F
RGOS 050
RGCS 050

*The motor may protrude from the housing end (A part).

Difference between shafts: **50** mm Flange shaft

Standard

Index	**RG I S 050**
Oscillator	**RGOS 050**
Reducer	**RGCS 050**

● Standard specifications

Dimensions

CAD

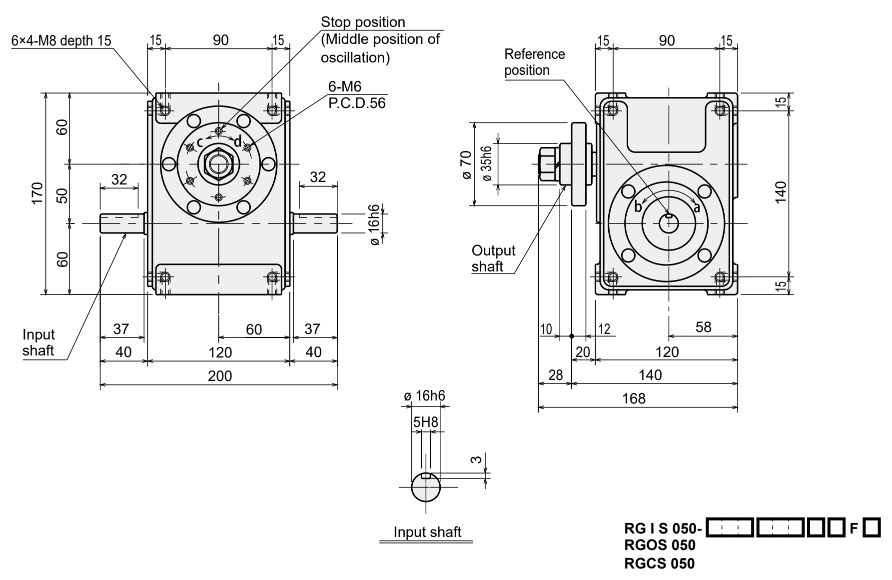

Installation position and oil supply/drain port and oil level gauge positions

Installation position	1	2	3
Series	**RGIS/RGOS/RGCS**	**RGIS/RGOS/RGCS**	**RGIS/RGOS/RGCS**
Dimensions	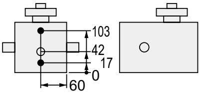	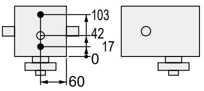	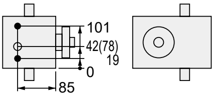 The dimensions in ( ) are for RGOS.

- ● Oil fill/drain port (Rc^1/4)
- ○ Oil level gauge (ø 20)

Installation position	4	5	6	
Series	**RGIS/RGOS/RGCS**	**RGIS/RGOS/RGCS**	**RGIS/RGCS**	**RGOS**
Dimensions	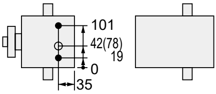 The dimensions in ( ) are for RGOS.	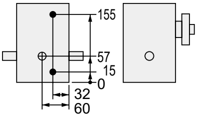	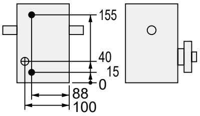	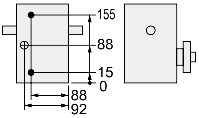

Characteristics Values in parenthesis ( ) represents the aluminum housing data.

Descriptions	Unit	Characteristics	
		Output shaft	Input shaft
Allowable thrust force	N	2200 (1300)	1200 (700)
Allowable radial force	N	2000 (1200)	900 (550)
Allowable bending moment	N·m	55(35)	-
Moment of inertia	kg·m^2	4.69×10^{-4}	2.57×10^{-4}

Descriptions	Unit	Characteristics
Internal frictional torque (Tin)	N·m	3.0
Product weight	kg	11(7.5)
Oil level	ℓ	0.5
Paint color		Silver

Accuracy (Index number of ☆)

	Index accuracy (sec.)	
Indexing accuracy	1 dwell	±30
	2 dwell	±90
	3 dwell	±135
	4 dwell	±180
Repeatability		15

(Index number other than ☆)

	Index accuracy (sec.)	
Indexing accuracy	1 dwell	±60
	2 dwell	±120
	3 dwell	±180
	4 dwell	±240
Repeatability		30

* For the dwell accuracy, please contact CKD.

List of index angles

Index series **RGIS 050** Cam curve/MS

	Total index angle (θt) / Index number (n)	90	120	150	180	210	240	270	300	330
1 dwell	☆2							○	○	○
	☆3				○	○	○	○	○	○
	☆4			○	○	○	○	○	○	○
	☆5		○	○	○	○	○	○	○	○
	☆6	○	○	○	○	○	○	○	○	○
	☆8	○	○	○	○	○	○	○	○	○
	☆9	○	○	○	○	○	○	○	○	○
	10	○	○	○	○	○	○	○	○	○
	12	○	○	○	○	○	○	○	○	○
2 dwell	☆16		○	○	○	○	○	○	○	○
	☆18		○	○	○	○	○	○	○	○
	20	○	○	○	○	○	○	○	○	○
	24	○	○	○	○	○	○	○	○	○
3 dwell	☆24			○	○	○	○	○	○	○
	30		○	○	○	○	○	○	○	○
	36	○	○	○	○	○	○	○	○	○
4 dwell	☆32				○	○	○	○	○	○
	☆36			○	○	○	○	○	○	○
	40			○	○	○	○	○	○	○
	48		○	○	○	○	○	○	○	○

Reducer series **RGCS 050**

Total index angle (θt) / Reduction ratio (id)	360
1/3	○
1/4	○
1/5	○
1/6	○
1/8	○
1/9	○
1/10	○
1/12	○

Oscillating series **RGOS 050** Cam curve/MS

Total index angle (θt) / Oscillating angle (ψ)	90	120	180	240	300	360
★120						○
★ 90					○	○
★ 60			○	○	○	○
★ 45			○	○	○	○
30			○	○	○	○

(Oscillating angle marked with ★)

Oscillating accuracy (sec.)	
Indexing accuracy	±90
Repeatability	15

(Oscillating angle other than ★)

Oscillating accuracy (sec.)	
Indexing accuracy	±120
Repeatability	30

* For the dwell accuracy, please contact CKD.

Index	RG I S 050
Oscillator	RGOS 050
Reducer	RGCS 050

● Dimensions with options

With worm reducer (with HO32-C/B)

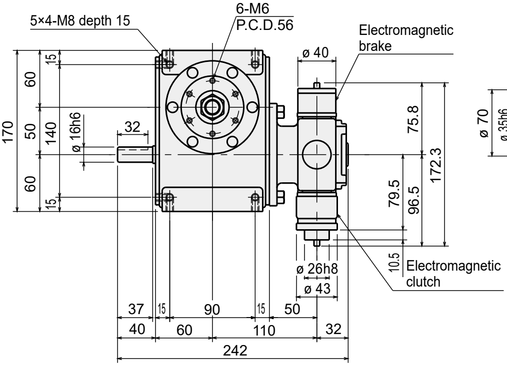

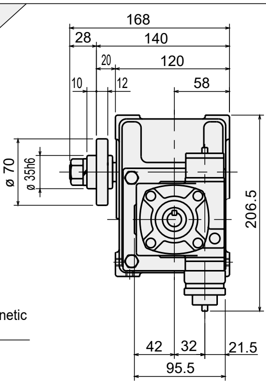

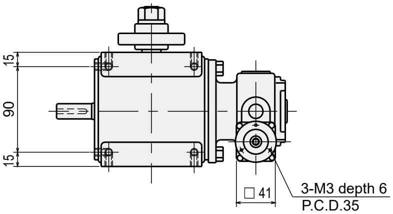

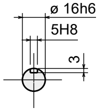

Input shaft

RG I S 050-☐☐☐☐F☐-NWN03☐YG
RGOS 050
RGCS 050

With worm reducer (without HO32-C/B)

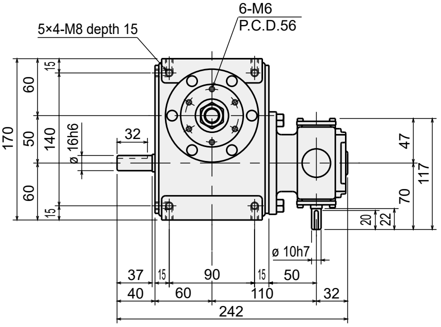

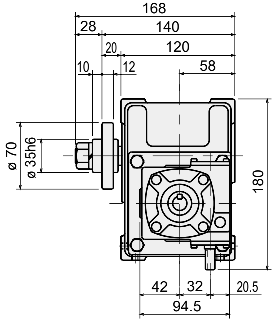

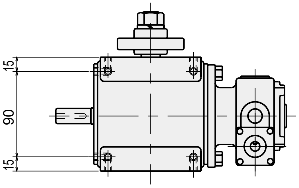

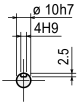

Reducer input shaft

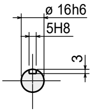

Input shaft

RG I S 050-☐☐☐☐F☐-NWN03☐NG
RGOS 050
RGCS 050

With Gear head + motor (40 W with C/B)

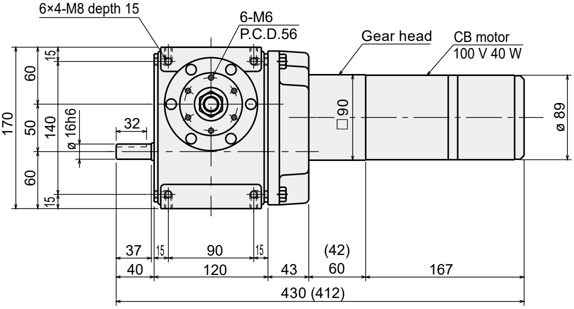

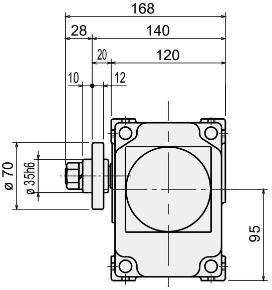

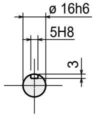

Input shaft

Dimensions in ( ) are for gear head reduction ratio of 1/3 to 1/18.

RG I S 050-☐☐☐☐☐☐☐☐ F ☐ -NGNCDA ☐ G
RGOS 050
RGCS 050

With Gear head + motor (60 W with C/B)

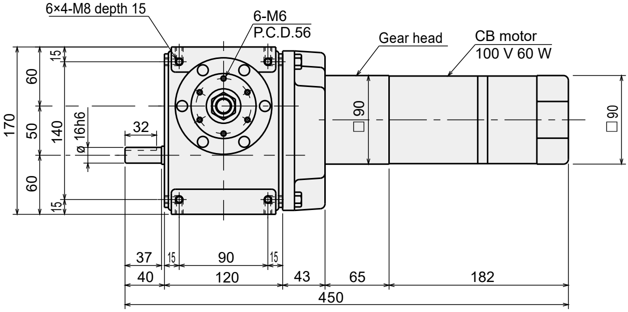

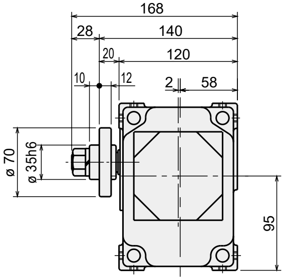

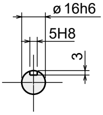

Input shaft

RG I S 050-☐☐☐☐☐☐☐☐ F ☐ -NGNCEA ☐ G
RGOS 050
RGCS 050

Index	**RG I S 050**
Oscillator	**RGOS 050**
Reducer	**RGCS 050**

● Dimensions with options

With the hollow shaft geared motor (0.1 kW)

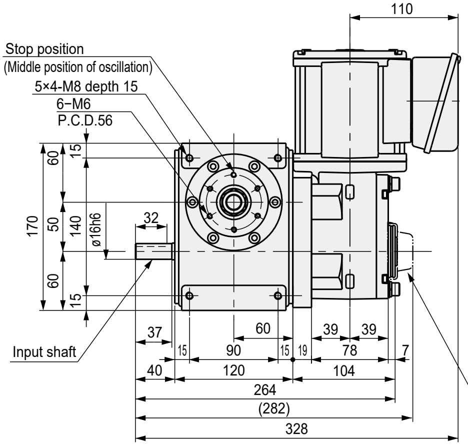

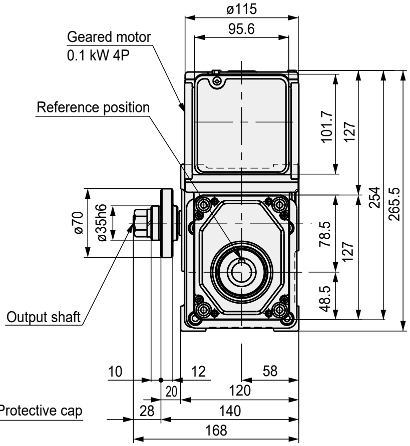

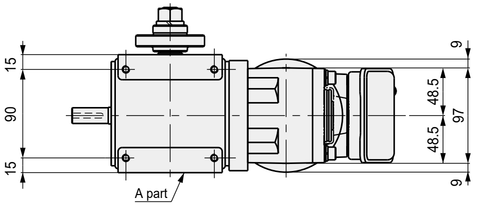

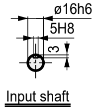

RG I S 050-☐☐☐☐☐☐☐☐ F ☐ -NHNGGS ☐ F
RGOS 050
RGCS 050

*The motor may protrude from the housing end (A part).

With the hollow shaft geared motor (0.2 kW)

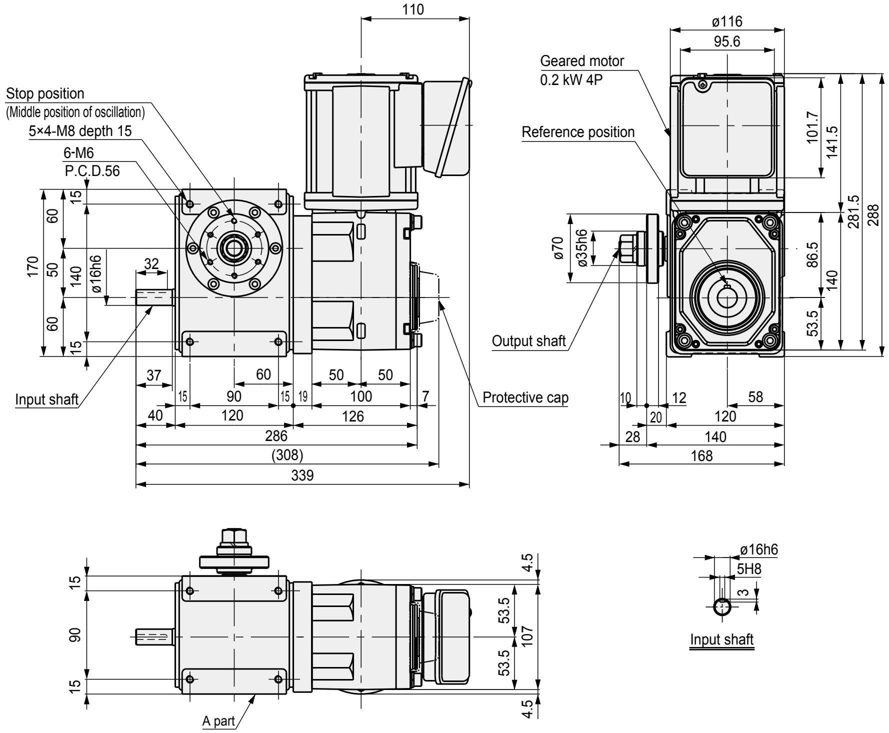

RG I S 050-☐☐☐☐F☐-NHNGHS☐F
RGOS 050
RGCS 050

*The motor may protrude from the housing end (A part).

Standard

Index	RG I S 063
Oscillator	RGOS 063
Reducer	RGCS 063

● Standard specifications

Dimensions

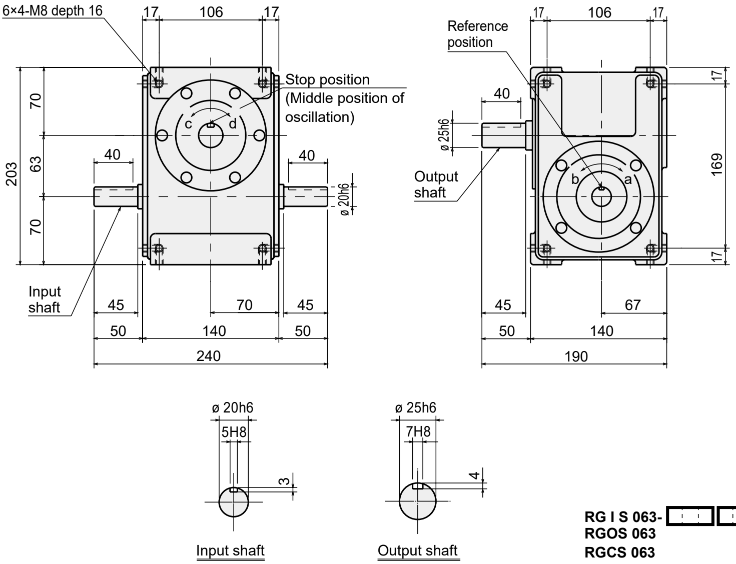

RG I S 063-☐☐☐☐**s**☐
RGOS 063
RGCS 063

Installation position and oil supply/drain port and oil level gauge positions

Installation position	1	2	3
Series	**RGIS/RGOS/RGCS**	**RGIS/RGOS/RGCS**	**RGIS/RGOS/RGCS**
Dimensions	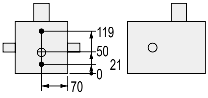	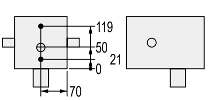	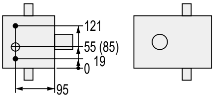 The dimensions in ( ) are for RGOS.

- ● Oil fill/drain port (Rc$^1/_4$)
- ○ Oil level gauge (ø 20)

Installation position	4	5	6	
Series	**RGIS/RGOS/RGCS**	**RGIS/RGOS/RGCS**	**RGIS/RGCS**	**RGOS**
Dimensions	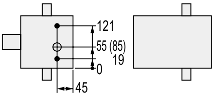 The dimensions in ( ) are for RGOS.	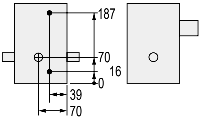	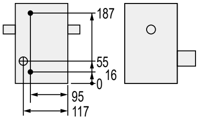	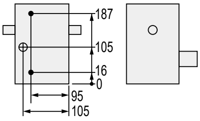

Characteristics Values in parenthesis ( ) represents the aluminum housing data.

Descriptions	Unit	Characteristics	
		Output shaft	Input shaft
Allowable thrust force	N	3000 (1800)	2000 (1200)
Allowable radial force	N	3000 (1800)	1600 (1000)
Allowable bending moment	N·m	110 (65)	-
Moment of inertia	$kg\cdot m^2$	6.99×10^{-4}	8.09×10^{-4}

Descriptions	Unit	Characteristics
Internal frictional torque (Tin)	N·m	4.8
Product weight	kg	18 (13)
Oil level	ℓ	0.8
Paint color		Silver

Accuracy

Index accuracy (sec.)		
Indexing accuracy	1 dwell	±30
	2 dwell	±90
	3 dwell	±135
	4 dwell	±180
Repeatability		15

Oscillating accuracy (sec.)	
Indexing accuracy	±90
Repeatability	15

* For the dwell accuracy, please contact CKD.

List of index angles

Index series RGIS 063 Cam curve/MS

	Total index angle (θt) Index number (n)	90	120	150	180	210	240	270	300	330
1 dwell	2							○	○	○
	3				○	○	○	○	○	○
	4			○	○	○	○	○	○	○
	5		○	○	○	○	○	○	○	○
	6	○	○	○	○	○	○	○	○	○
	8	○	○	○	○	○	○	○	○	○
	9	○	○	○	○	○	○	○	○	○
	10	○	○	○	○	○	○	○	○	○
	12	○	○	○	○	○	○	○	○	○
2 dwell	16		○	○	○	○	○	○	○	○
	18		○	○	○	○	○	○	○	○
	20	○	○	○	○	○	○	○	○	○
	24	○	○	○	○	○	○	○	○	○
3 dwell	24			○	○	○	○	○	○	○
	30		○	○	○	○	○	○	○	○
	36	○	○	○	○	○	○	○	○	○
4 dwell	32				○	○	○	○	○	○
	36			○	○	○	○	○	○	○
	40			○	○	○	○	○	○	○
	48		○	○	○	○	○	○	○	○

Reducer series RGCS 063

Total index angle (θt) Reduction ratio (id)	360
1/3	○
1/4	○
1/5	○
1/6	○
1/8	○
1/9	○
1/10	○
1/12	○

Oscillating series RGOS 063 Cam curve/MS

Total index angle (θt) Oscillating angle (ψ)	90	120	180	240	300	360
120						○
90					○	○
60			○	○	○	○
45			○	○	○	○
30			○	○	○	○

Index	RG I S 063
Oscillator	RGOS 063
Reducer	RGCS 063

● Dimensions with options

With worm reducer (with HO40-C/B)

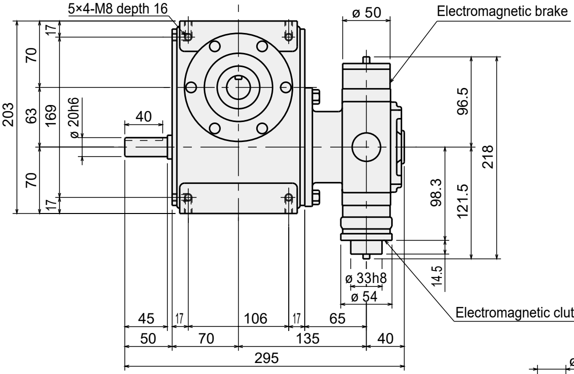

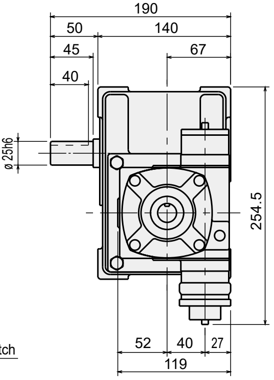

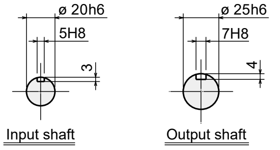

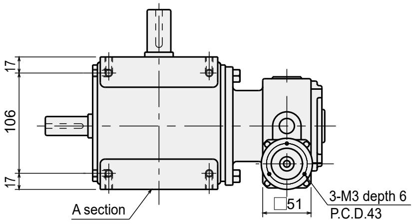

RG I S 063-☐☐☐☐S☐-NWN04☐YG
RGOS 063
RGCS 063

* Reducer may protrude from the housing end face (section A).

With worm reducer (without HO40-C/B)

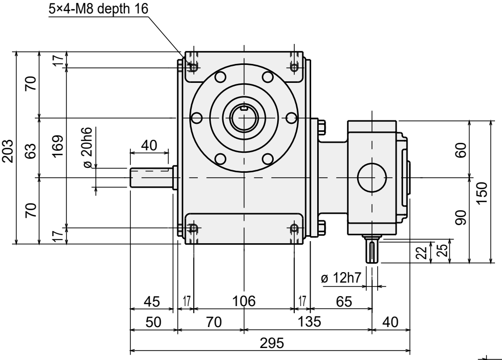

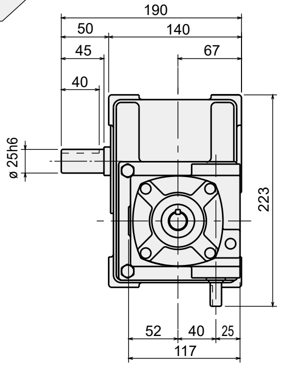

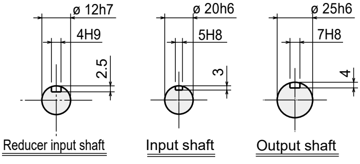

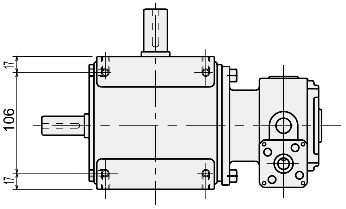

RG I S 063-☐☐☐☐S☐-NWN04☐NG
RGOS 063
RGCS 063

With Gear head + motor (60 W with C/B)

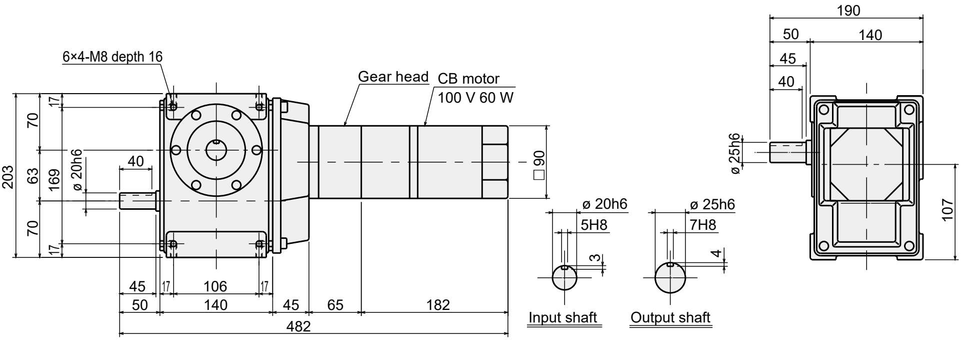

RG I S 063-☐☐☐☐☐☐☐☐ S ☐ -NGNCEA ☐ G
RGOS 063
RGCS 063

With Gear head + motor (90 W with C/B)

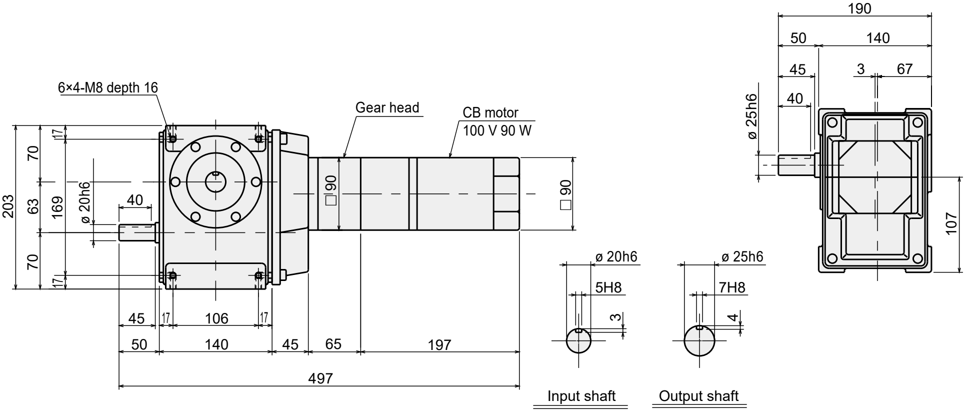

RG I S 063-☐☐☐☐☐☐☐☐ S ☐ -NGNCFA ☐ G
RGOS 063
RGCS 063

Dimensions with options

With Torque saver (TSF6)

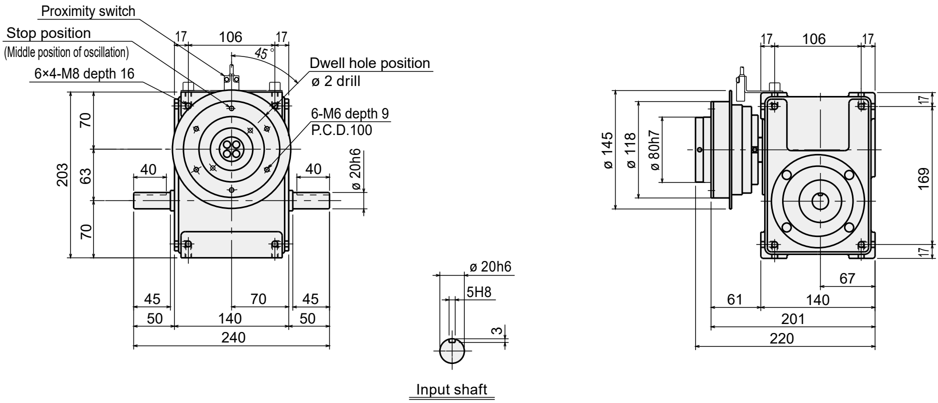

RG I S 063-☐☐☐☐☐☐☐☐ S ☐ -NNF-06 ☐
RGOS 063
RGCS 063

With Torque guard (TGX35)

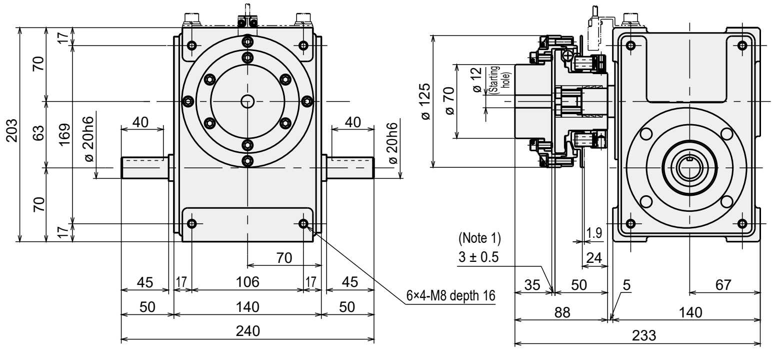

RG I S 063-☐☐☐☐☐☐☐☐ S ☐ -NNX-35 ☐
RGOS 063
RGCS 063

Note 1: Attach to the equipment within the dimensions specified.

With the hollow shaft geared motor (0.2 kW)

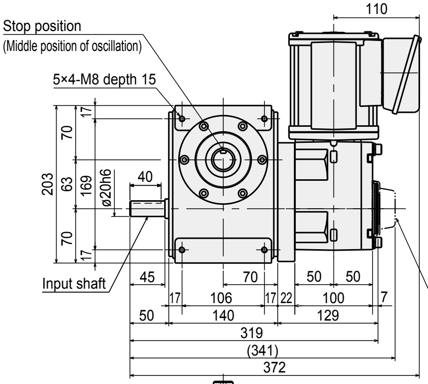

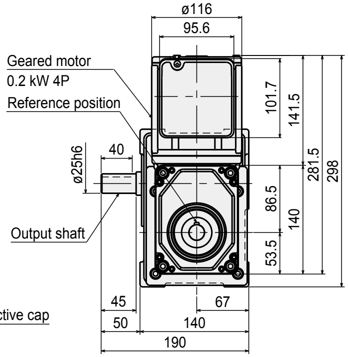

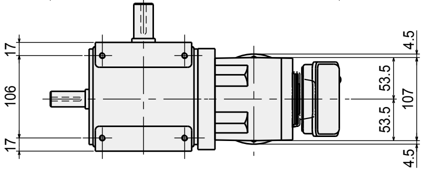

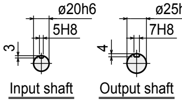

RG I S 063-□□□□S□−NHNGHS□F
RGOS 063
RGCS 063

With the hollow shaft geared motor (0.4 kW)

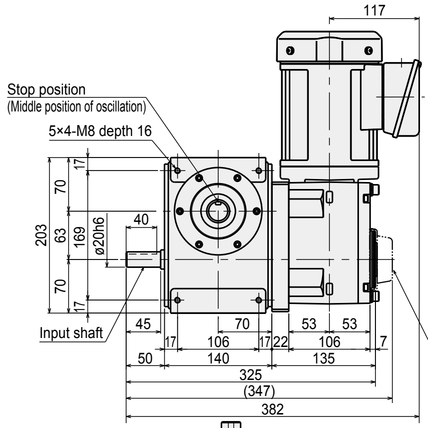

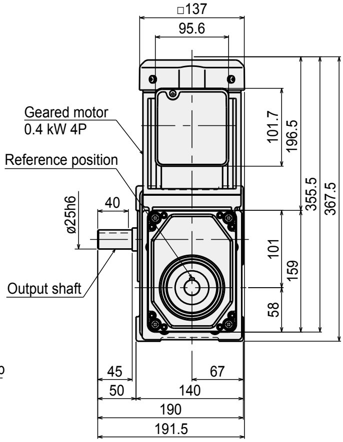

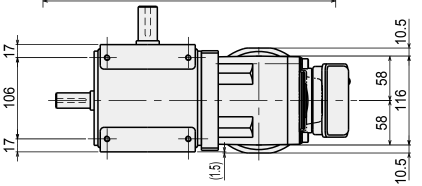

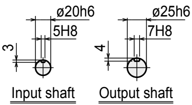

RG I S 063-□□□□S□−NHNGJS□F
RGOS 063
RGCS 063

Standard

Index	RG I S 063
Oscillator	RGOS 063
Reducer	RGCS 063

● Standard specifications

Dimensions

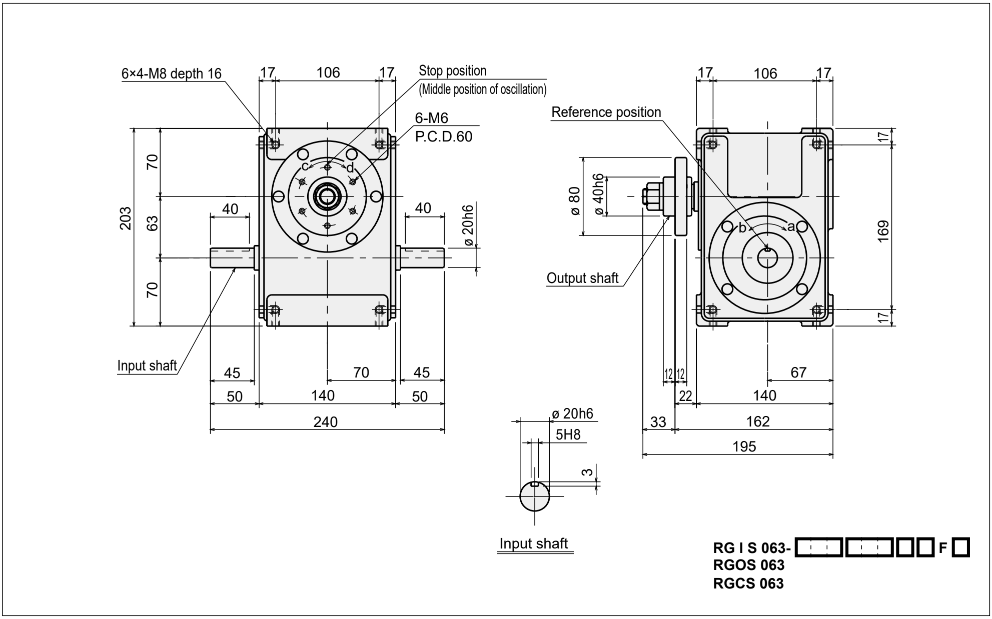

Installation position and oil supply/drain port and oil level gauge positions

Installation position	1	2	3
Series	**RGIS/RGOS/RGCS**	**RGIS/RGOS/RGCS**	**RGIS/RGOS/RGCS**
Dimensions	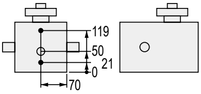	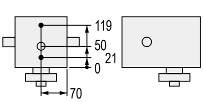	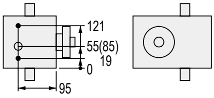 The dimensions in ( ) are for RGOS.

- ● Oil fill/drain port (Rc$^{1}/_{4}$)
- ○ Oil level gauge (ø 20)

Installation position	4	5	6	
Series	**RGIS/RGOS/RGCS**	**RGIS/RGOS/RGCS**	**RGIS/RGCS**	**RGOS**
Dimensions	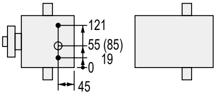 The dimensions in ( ) are for RGOS.	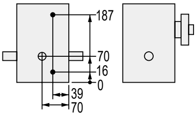	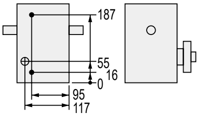	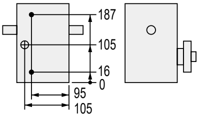

Characteristics Values in parenthesis ( ) represents the aluminum housing data.

Descriptions	Unit	Characteristics	
		Output shaft	Input shaft
Allowable thrust force	N	3000 (1800)	2000 (1200)
Allowable radial force	N	3000 (1800)	1600 (1000)
Allowable bending moment	N·m	110 (65)	-
Moment of inertia	kg·m^2	1.12×10^{-3}	8.09×10^{-4}

Descriptions	Unit	Characteristics
Internal frictional torque (Tin)	N·m	4.8
Product weight	kg	18 (13)
Oil level	ℓ	0.8
Paint color		Silver

Accuracy

Index accuracy (sec.)		
Indexing accuracy	1 dwell	±30
	2 dwell	±90
	3 dwell	±135
	4 dwell	±180
Repeatability		15

Oscillating accuracy (sec.)	
Indexing accuracy	±90
Repeatability	15

* For the dwell accuracy, please contact CKD.

List of index angles

Index series **RGIS 063** Cam curve/MS

Total index angle (θt) / Index number (n)		90	120	150	180	210	240	270	300	330
1 dwell	2							○	○	○
	3				○	○	○	○	○	○
	4			○	○	○	○	○	○	○
	5		○	○	○	○	○	○	○	○
	6	○	○	○	○	○	○	○	○	○
	8	○	○	○	○	○	○	○	○	○
	9	○	○	○	○	○	○	○	○	○
	10	○	○	○	○	○	○	○	○	○
	12	○	○	○	○	○	○	○	○	○
2 dwell	16		○	○	○	○	○	○	○	○
	18		○	○	○	○	○	○	○	○
	20	○	○	○	○	○	○	○	○	○
	24	○	○	○	○	○	○	○	○	○
3 dwell	24			○	○	○	○	○	○	○
	30		○	○	○	○	○	○	○	○
	36	○	○	○	○	○	○	○	○	○
4 dwell	32				○	○	○	○	○	○
	36			○	○	○	○	○	○	○
	40			○	○	○	○	○	○	○
	48		○	○	○	○	○	○	○	○

Reducer series **RGCS 063**

Total index angle (θt) / Reduction ratio (id)	360
1/3	○
1/4	○
1/5	○
1/6	○
1/8	○
1/9	○
1/10	○
1/12	○

Oscillating series **RGOS 063** Cam curve/MS

Total index angle (θt) / Oscillating angle (ψ)	90	120	180	240	300	360
120						○
90					○	○
60			○	○	○	○
45			○	○	○	○
30			○	○	○	○

● Dimensions with options

With worm reducer (with HO40-C/B)

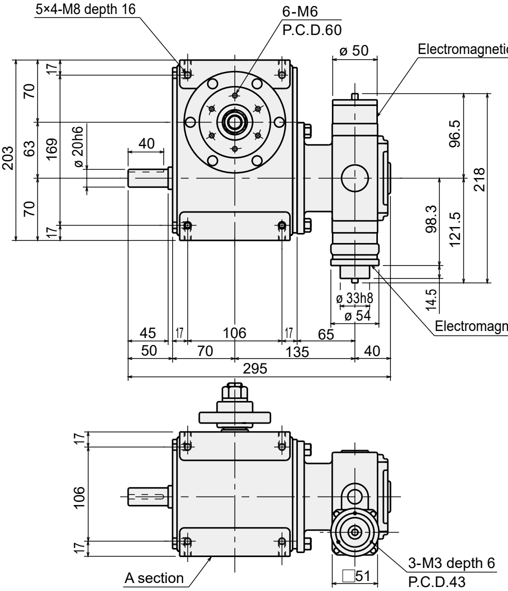

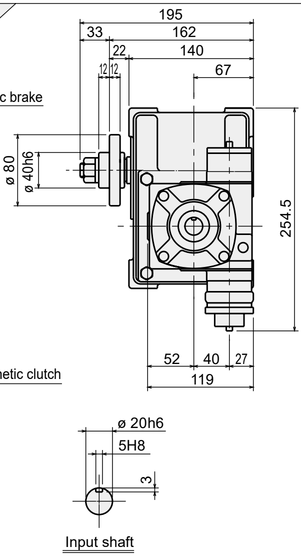

RG I S 063-☐☐☐☐F☐-NWN04☐YG
RGOS 063
RGCS 063

* Reducer may protrude from the housing end face (section A).

With worm reducer (without HO40-C/B)

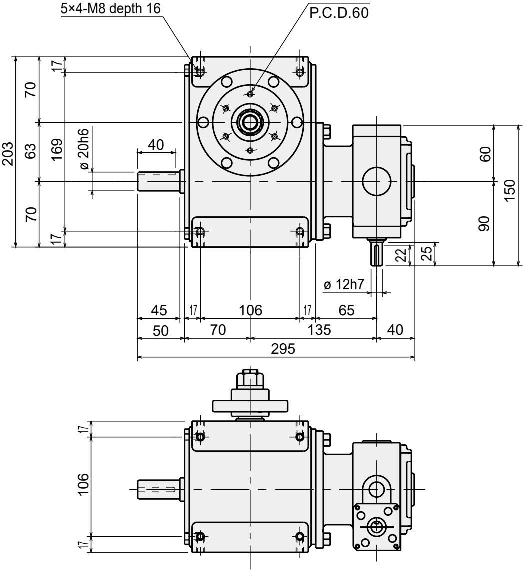

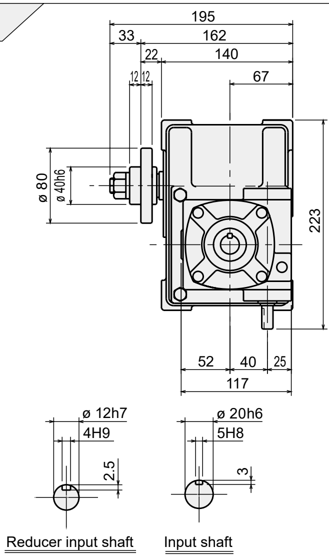

RG I S 063-☐☐☐☐F☐-NWN04☐NG
RGOS 063
RGCS 063

With Gear head + motor (60 W with C/B)

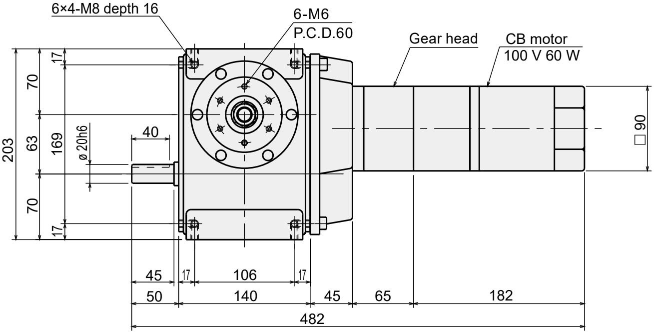

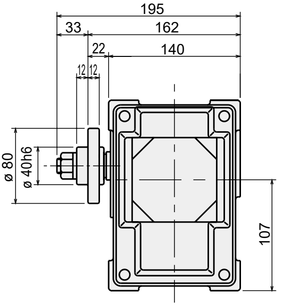

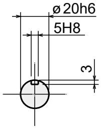

Input shaft

RG I S 063-☐☐☐☐☐☐☐☐ **F** ☐ **-NGNCEA** ☐ **G**
RGOS 063
RGCS 063

With Gear head + motor (90 W with C/B)

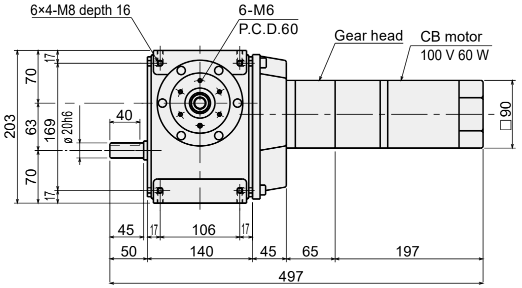

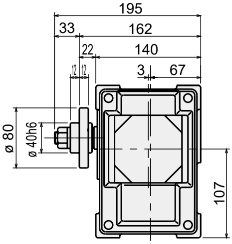

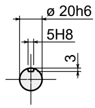

Input shaft

RG I S 063-☐☐☐☐☐☐☐☐ **F** ☐ **-NGNCFA** ☐ **G**
RGOS 063
RGCS 063

Index	**RG I S 063**
Oscillator	**RGOS 063**
Reducer	**RGCS 063**

Dimensions with options

With the hollow shaft geared motor (0.2 kW)

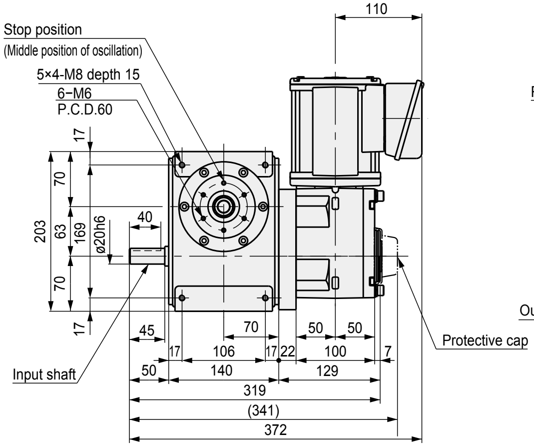

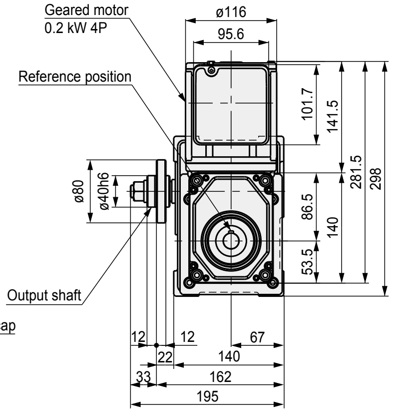

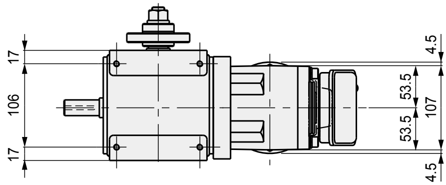

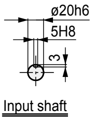

RG I S 063-☐☐☐☐ F ☐ -NHNGHS ☐ F
RGOS 063
RGCS 063

With the hollow shaft geared motor (0.4 kW)

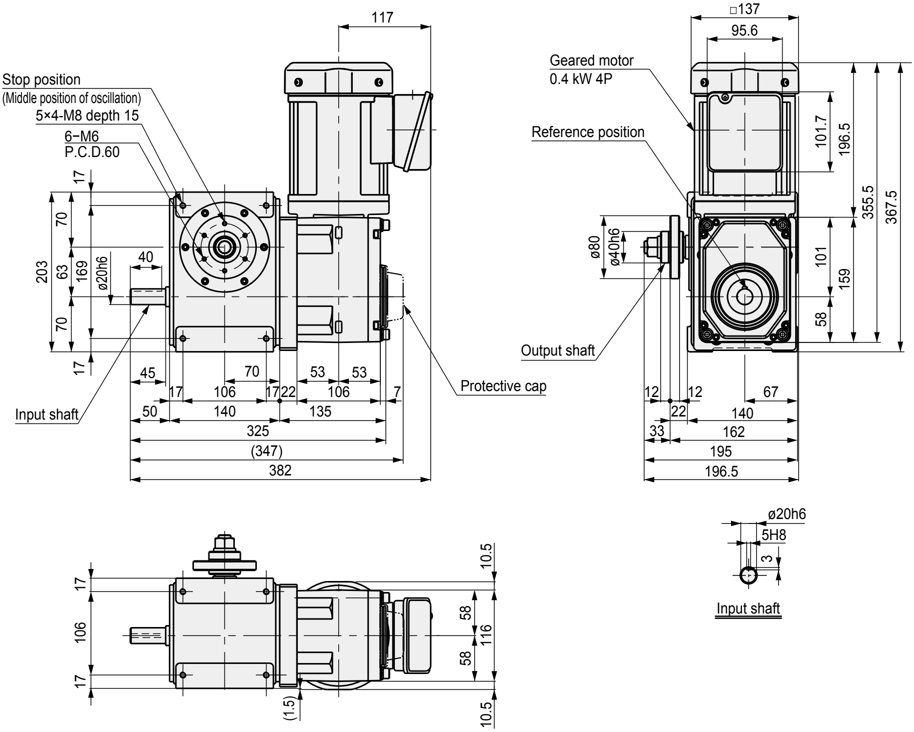

RG I S 063-☐☐☐☐☐☐☐☐F☐−NHNGJS☐F
RGOS 063
RGCS 063

Difference between shafts: 80 mm Straight shaft

Standard

Index	**RG I S 080**
Oscillator	**RGOS 080**
Reducer	**RGCS 080**

● Standard specifications

Dimensions

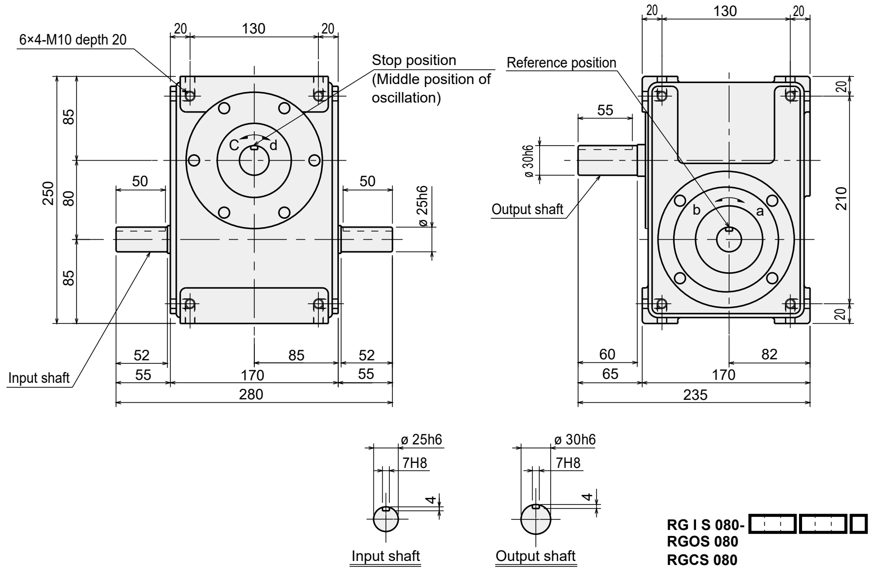

Installation position and oil supply/drain port and oil level gauge positions

Installation position	1	2	3
Series	**RGIS/RGOS/RGCS**	**RGIS/RGOS/RGCS**	**RGIS/RGOS/RGCS**
Dimensions	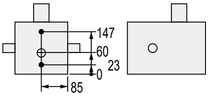	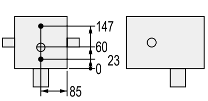	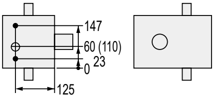 The dimensions in ( ) are for RGOS.

- ● Oil fill/drain port (Rc$^{3}/_{8}$)
- ○ Oil level gauge (ø 30)

Installation position	4	5	6	
Series	**RGIS/RGOS/RGCS**	**RGIS/RGOS/RGCS**	**RGIS/RGCS**	**RGOS**
Dimensions	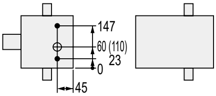 The dimensions in ( ) are for RGOS.	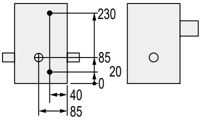	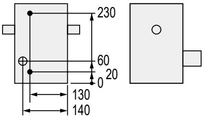	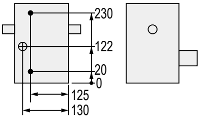

Characteristics Values in parenthesis ( ) represents the aluminum housing data.

Descriptions	Unit	Characteristics	
		Output shaft	Input shaft
Allowable thrust force	N	3500 (2100)	2500 (1500)
Allowable radial force	N	4200 (2500)	2700 (1600)
Allowable bending moment	N·m	150 (90)	-
Moment of inertia	kg·m^2	1.95 × 10^{-3}	3.14 × 10^{-3}

Descriptions	Unit	Characteristics
Internal frictional torque (Tin)	N·m	7.8
Product weight	kg	32 (23)
Oil level	ℓ	1.2
Paint color		Silver

Accuracy

Index accuracy (sec.)		
Indexing accuracy	1 dwell	±30
	2 dwell	±60
	3 dwell	±90
	4 dwell	±120
Repeatability		15

Oscillating accuracy (sec.)	
Indexing accuracy	±60
Repeatability	15

* For the dwell accuracy, please contact CKD.

List of index angles

Index series **RGIS 080** Cam curve/MS

Total index angle (θt) / Index number (n)		90	120	150	180	210	240	270	300	330
1 dwell	2							○	○	○
	3				○	○	○	○	○	○
	4			○	○	○	○	○	○	○
	5		○	○	○	○	○	○	○	○
	6	○	○	○	○	○	○	○	○	○
	8	○	○	○	○	○	○	○	○	○
	9	○	○	○	○	○	○	○	○	○
	10	○	○	○	○	○	○	○	○	○
	12	○	○	○	○	○	○	○	○	○
	15	○	○	○	○	○	○	○	○	○
	16	○	○	○	○	○	○	○	○	○
2 dwell	16		○	○	○	○	○	○	○	○
	18		○	○	○	○	○	○	○	○
	20	○	○	○	○	○	○	○	○	○
	24	○	○	○	○	○	○	○	○	○
	30	○	○	○	○	○	○	○	○	○
	32	○	○	○	○	○	○	○	○	○
3 dwell	24			○	○	○	○	○	○	○
	30		○	○	○	○	○	○	○	○
	36	○	○	○	○	○	○	○	○	○
	48	○	○	○	○	○	○	○	○	○
4 dwell	32				○	○	○	○	○	○
	36			○	○	○	○	○	○	○
	40			○	○	○	○	○	○	○
	48		○	○	○	○	○	○	○	○

Reducer series **RGCS 080**

Total index angle (θt) / Reduction ratio (id)	360
1/3	○
1/4	○
1/5	○
1/6	○
1/8	○
1/9	○
1/10	○
1/12	○

Oscillating series **RGOS 080** Cam curve/MS

Total index angle (θt) / Oscillating angle (ψ)	90	120	180	240	300	360
120						○
90					○	○
60			○	○	○	○
45			○	○	○	○
30			○	○	○	○

● Dimensions with options

With worm reducer (with HO50-C/B)

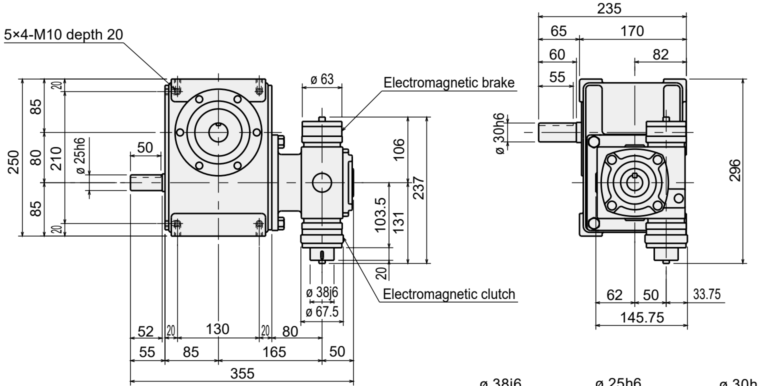

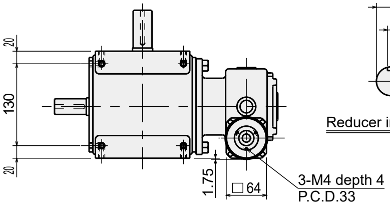

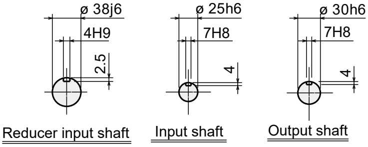

RG I S 080-☐☐☐☐S☐-NWN05☐YG
RGOS 080
RGCS 080

With worm reducer (without HO50-C/B)

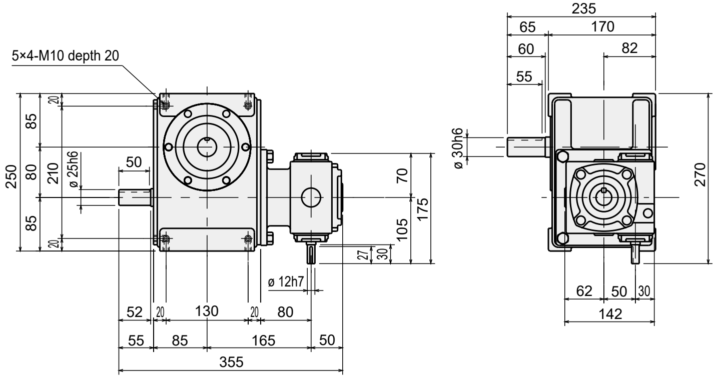

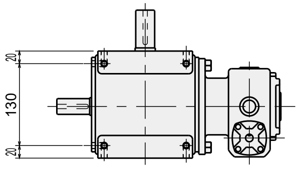

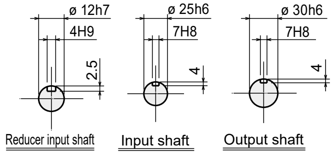

RG I S 080-☐☐☐☐S☐-NWN05☐NG
RGOS 080
RGCS 080

With Torque saver (TSF8)

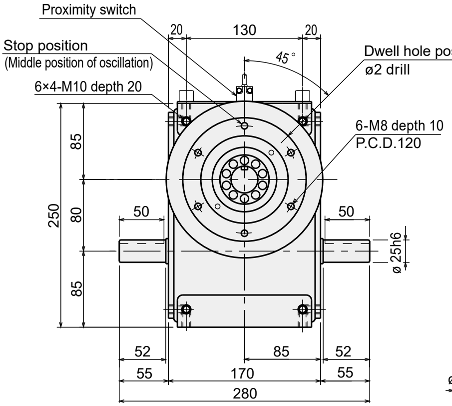

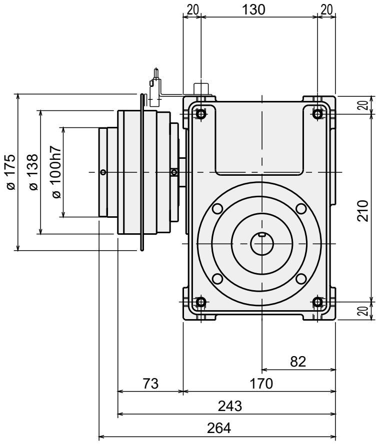

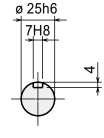

Input shaft

RG I S 080-☐☐☐☐☐☐☐☐ S ☐ -NNF-08 ☐
RGOS 080
RGCS 080

With Torque guard (TGX50)

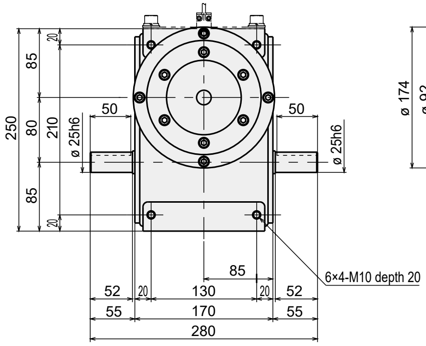

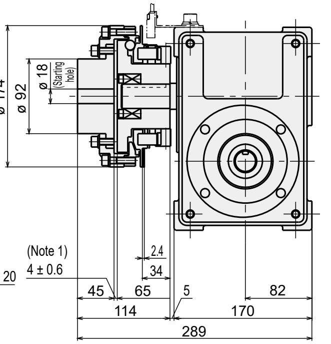

RG I S 080-☐☐☐☐☐☐☐☐ S ☐ -NNX-50 ☐
RGOS 080
RGCS 080

Note 1: Attach to the equipment within the dimensions specified.

Index	**RG I S 080**
Oscillator	**RGOS 080**
Reducer	**RGCS 080**

● Dimensions with options

With the hollow shaft geared motor (0.4 kW)

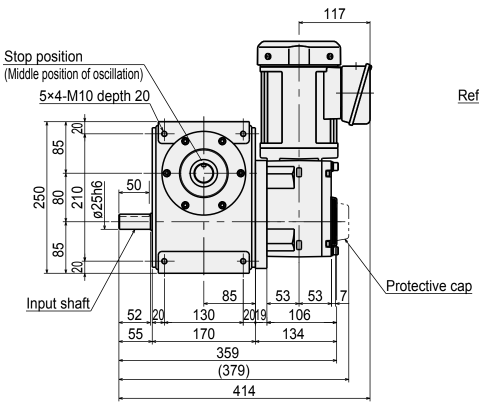

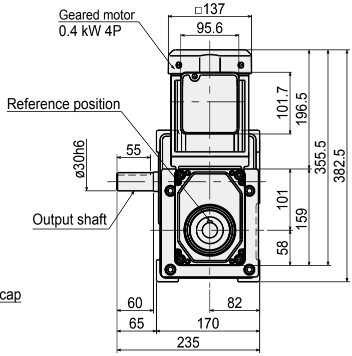

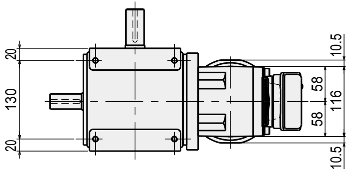

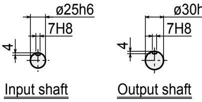

RG I S 080-☐☐☐☐S☐−NHNGJS☐F
RGOS 080
RGCS 080

With the hollow shaft geared motor (0.75 kW)

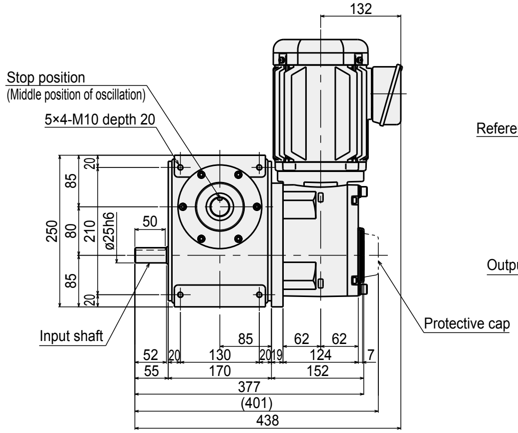

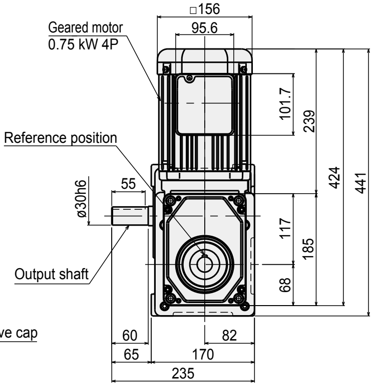

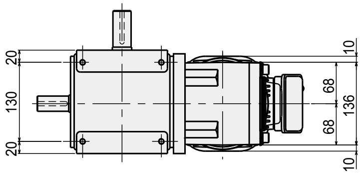

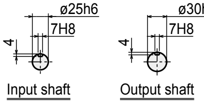

RG I S 080-☐☐☐☐S☐−NHNGKS☐F
RGOS 080
RGCS 080

● MEMO

Difference between shafts: 80 mm Flange shaft

Standard

Index	RG I S 080
Oscillator	RGOS 080
Reducer	RGCS 080

● Standard specifications

Dimensions

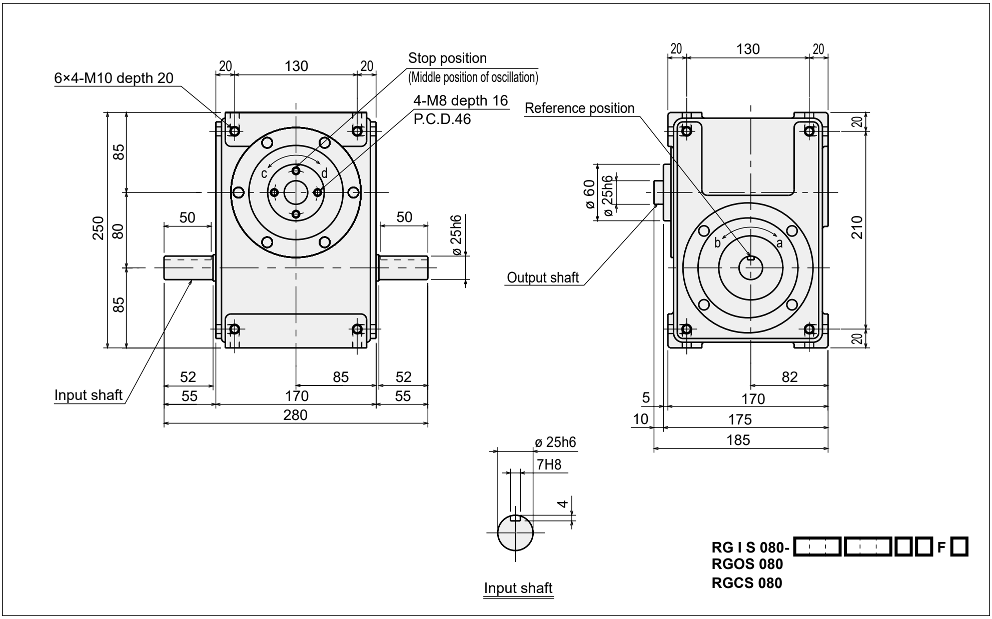

Installation position and oil supply/drain port and oil level gauge positions

Installation position	1	2	3
Series	RGIS/RGOS/RGCS	RGIS/RGOS/RGCS	RGIS/RGOS/RGCS
Dimensions	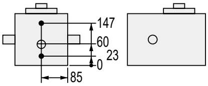	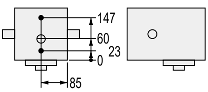	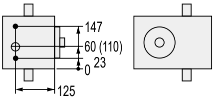 The dimensions in ( ) are for RGOS.

- ● Oil fill/drain port (Rc^3/$_8$)
- ○ Oil level gauge (ø 30)

Installation position	4	5	6	
Series	RGIS/RGOS/RGCS	RGIS/RGOS/RGCS	RGIS/RGCS	RGOS
Dimensions	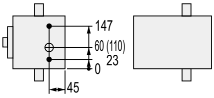 The dimensions in ( ) are for RGOS.	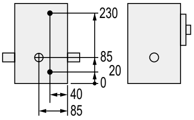	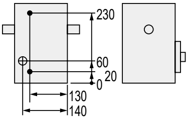	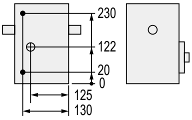

Characteristics Values in parenthesis ( ) represents the aluminum housing data.

Descriptions	Unit	Characteristics	
		Output shaft	Input shaft
Allowable thrust force	N	3500 (2100)	2500 (1500)
Allowable radial force	N	4200 (2500)	2700 (1700)
Allowable bending moment	N·m	200 (120)	-
Moment of inertia	kg·m^2	3.07×10^{-3}	3.14×10^{-3}

Descriptions	Unit	Characteristics
Internal frictional torque (Tin)	N·m	7.8
Product weight	kg	32 (23)
Oil level	ℓ	1.2
Paint color		Silver

Accuracy

Index accuracy (sec.)		
Indexing accuracy	1 dwell	±30
	2 dwell	±60
	3 dwell	±90
	4 dwell	±120
Repeatability		15

Oscillating accuracy (sec.)	
Indexing accuracy	±60
Repeatability	15

* For the dwell accuracy, please contact CKD.

List of index angles

Index series **RGIS 080** Cam curve/MS

	Total index angle (θt) / Index number (n)	90	120	150	180	210	240	270	300	330
1 dwell	2							○	○	○
	3				○	○	○	○	○	○
	4			○	○	○	○	○	○	○
	5		○	○	○	○	○	○	○	○
	6	○	○	○	○	○	○	○	○	○
	8	○	○	○	○	○	○	○	○	○
	9	○	○	○	○	○	○	○	○	○
	10	○	○	○	○	○	○	○	○	○
	12	○	○	○	○	○	○	○	○	○
	15	○	○	○	○	○	○	○	○	○
	16	○	○	○	○	○	○	○	○	○
2 dwell	16		○	○	○	○	○	○	○	○
	18		○	○	○	○	○	○	○	○
	20	○	○	○	○	○	○	○	○	○
	24	○	○	○	○	○	○	○	○	○
	30	○	○	○	○	○	○	○	○	○
	32	○	○	○	○	○	○	○	○	○
3 dwell	24			○	○	○	○	○	○	○
	30		○	○	○	○	○	○	○	○
	36	○	○	○	○	○	○	○	○	○
	48	○	○	○	○	○	○	○	○	○
4 dwell	32				○	○	○	○	○	○
	36			○	○	○	○	○	○	○
	40			○	○	○	○	○	○	○
	48		○	○	○	○	○	○	○	○

Reducer series **RGCS 080**

Total index angle (θt) / Reduction ratio (id)	360
1/3	○
1/4	○
1/5	○
1/6	○
1/8	○
1/9	○
1/10	○
1/12	○

Oscillating series **RGOS 080** Cam curve/MS

Total index angle (θt) / Oscillating angle (ψ)	90	120	180	240	300	360
120						○
90					○	○
60			○	○	○	○
45			○	○	○	○
30			○	○	○	○

Index	**RG I S 080**
Oscillator	**RGOS 080**
Reducer	**RGCS 080**

● Dimensions with options

With worm reducer (with HO50-C/B)

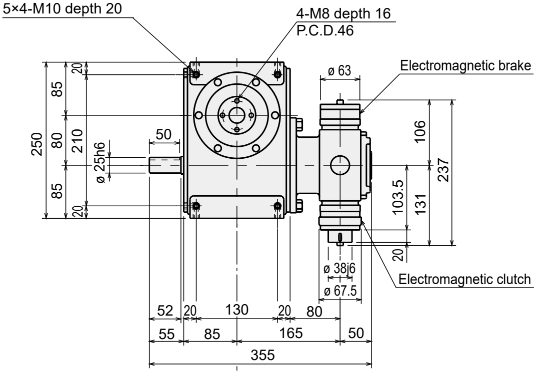

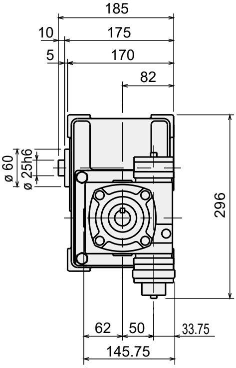

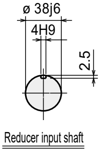

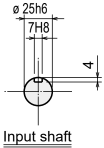

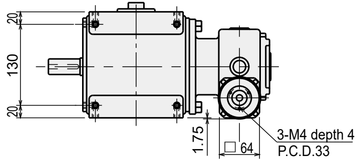

RG I S 080-☐☐☐☐☐☐☐☐F☐-NWN05☐YG
RGOS 080
RGCS 080

With worm reducer (without HO50-C/B)

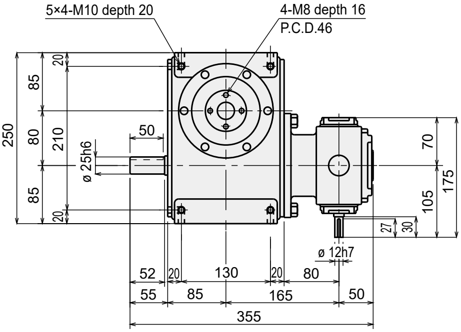

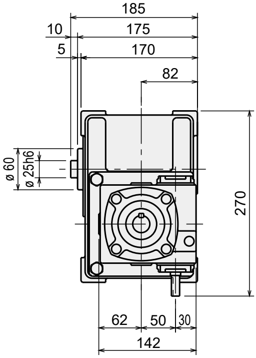

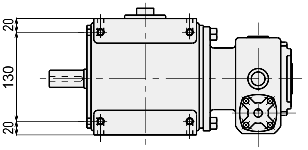

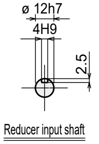

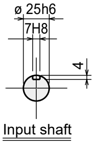

RG I S 080-☐☐☐☐☐☐☐☐F☐-NWN05☐NG
RGOS 080
RGCS 080

With the hollow shaft geared motor (0.4 kW)

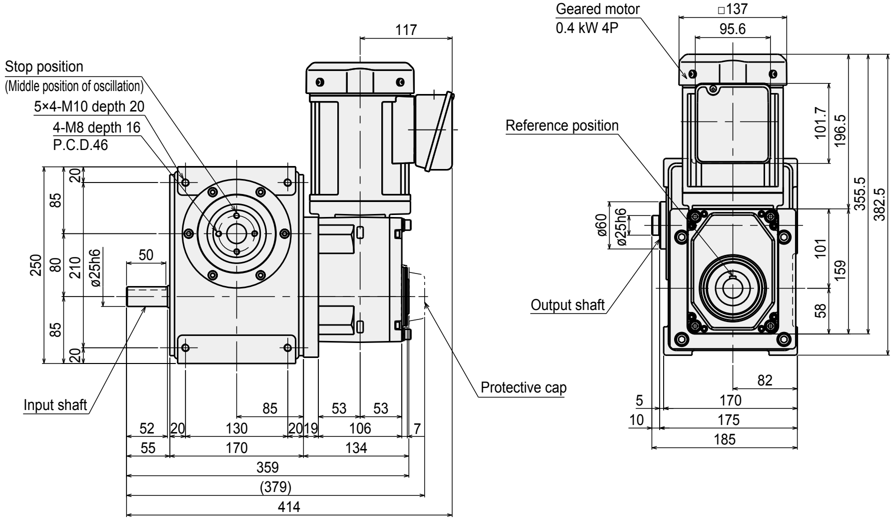

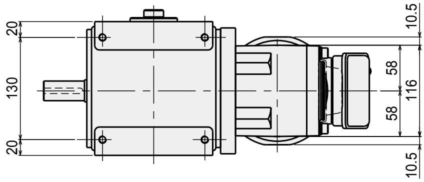

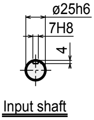

Input shaft

RG I S 080-☐☐☐☐F☐-NHNGJS☐F
RGOS 080
RGCS 080

Index	RG I S 080
Oscillator	RGOS 080
Reducer	RGCS 080

Dimensions with options

With the hollow shaft geared motor (0.75 kW)

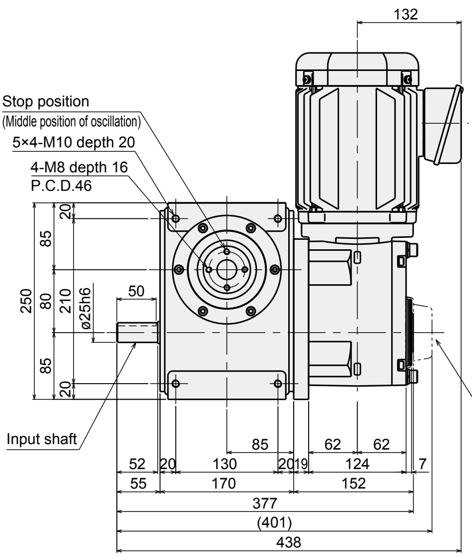

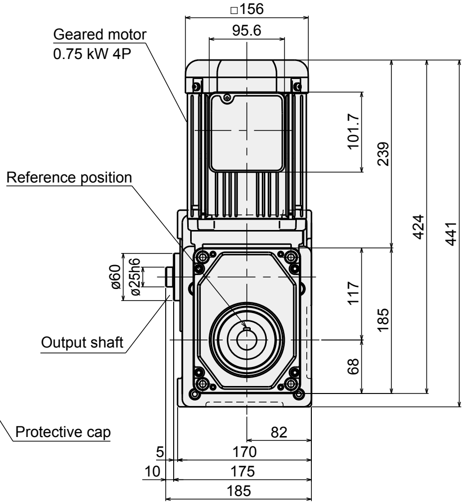

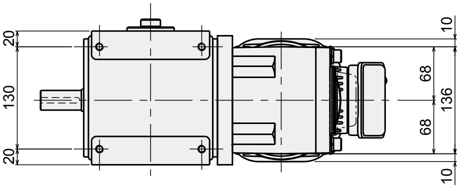

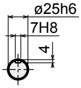

Input shaft

RG I S 080-☐☐☐☐F☐−NHNGKS☐F
RGOS 080
RGCS 080

● MEMO

Standard

Index	RG I S 110
Oscillator	RGOS 110
Reducer	RGCS 110

● Standard specifications

Dimensions

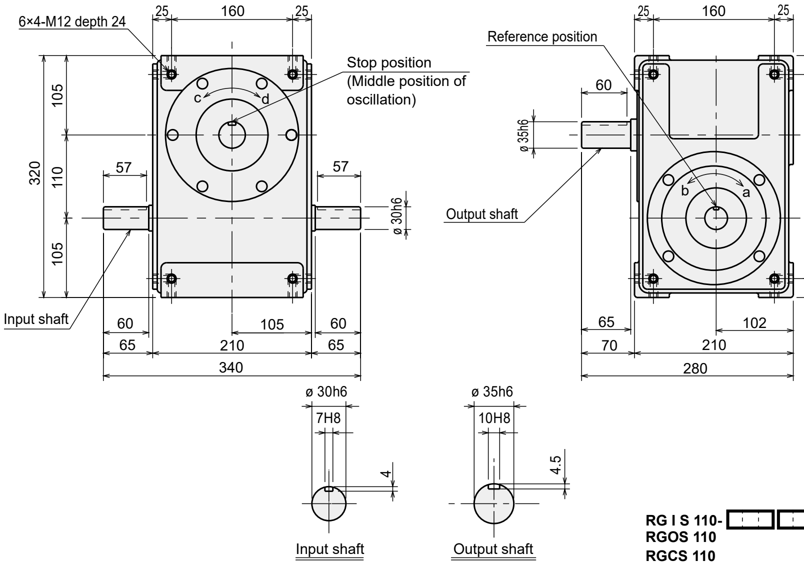

RG I S 110-□□□□ s□
RGOS 110
RGCS 110

Installation position and oil supply/drain port and oil level gauge positions

Installation position	1	2	3
Series	**RGIS/RGOS/RGCS**	**RGIS/RGOS/RGCS**	**RGIS/RGOS/RGCS**
Dimensions	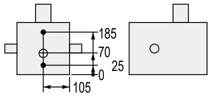	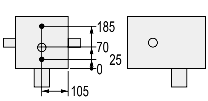	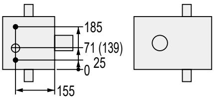 The dimensions in ( ) are for RGOS.

- ● Oil fill/drain port (Rc$^{3}/_{8}$)
- ○ Oil level gauge (ø 30)

Installation position	4	5	6	
Series	**RGIS/RGOS/RGCS**	**RGIS/RGOS/RGCS**	**RGIS/RGCS**	**RGOS**
Dimensions	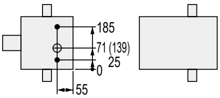 The dimensions in ( ) are for RGOS.	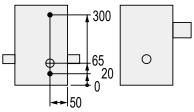	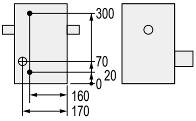	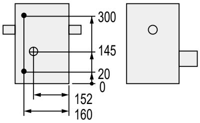

Characteristics

Descriptions	Unit	Characteristics	
		Output shaft	Input shaft
Allowable thrust force	N	4900	3500
Allowable radial force	N	6200	3600
Allowable bending moment	N·m	180	-
Moment of inertia	$kg{\cdot}m^2$	8.92 × 10^{-3}	1.36 × 10^{-2}

Descriptions	Unit	Characteristics
Internal frictional torque (Tin)	N·m	15
Product weight	kg	60
Oil level	ℓ	3.8
Paint color		Silver

Accuracy

Index accuracy (sec.)		
Indexing accuracy	1 dwell	±30
	2 dwell	±60
	3 dwell	±90
	4 dwell	±120
Repeatability		15

Oscillating accuracy (sec.)	
Indexing accuracy	±60
Repeatability	15

* For the dwell accuracy, please contact CKD.

List of index angles

Index series **RGIS 110** Cam curve/MS

	Total index angle (θt) / Index number (n)	90	120	150	180	210	240	270	300	330
1 dwell	2							○	○	○
	3				○	○	○	○	○	○
	4			○	○	○	○	○	○	○
	5		○	○	○	○	○	○	○	○
	6	○	○	○	○	○	○	○	○	○
	8	○	○	○	○	○	○	○	○	○
	9	○	○	○	○	○	○	○	○	○
	10	○	○	○	○	○	○	○	○	○
	12	○	○	○	○	○	○	○	○	○
	15	○	○	○	○	○	○	○	○	○
	16	○	○	○	○	○	○	○	○	○
2 dwell	16		○	○	○	○	○	○	○	○
	18		○	○	○	○	○	○	○	○
	20	○	○	○	○	○	○	○	○	○
	24	○	○	○	○	○	○	○	○	○
	30	○	○	○	○	○	○	○	○	○
	32	○	○	○	○	○	○	○	○	○
3 dwell	24			○	○	○	○	○	○	○
	30		○	○	○	○	○	○	○	○
	36	○	○	○	○	○	○	○	○	○
	48	○	○	○	○	○	○	○	○	○
4 dwell	32				○	○	○	○	○	○
	36			○	○	○	○	○	○	○
	40			○	○	○	○	○	○	○
	48		○	○	○	○	○	○	○	○

Reducer series **RGCS 110**

Total index angle (θt) / Reduction ratio (id)	360
1/3	○
1/4	○
1/5	○
1/6	○
1/8	○
1/9	○
1/10	○
1/12	○

Oscillating series **RGOS 110** Cam curve/MS

Total index angle (θt) / Oscillating angle (ψ)	90	120	180	240	300	360
120						○
90					○	○
60			○	○	○	○
45			○	○	○	○
30			○	○	○	○

● Dimensions with options

With worm reducer (with HO60-C/B)

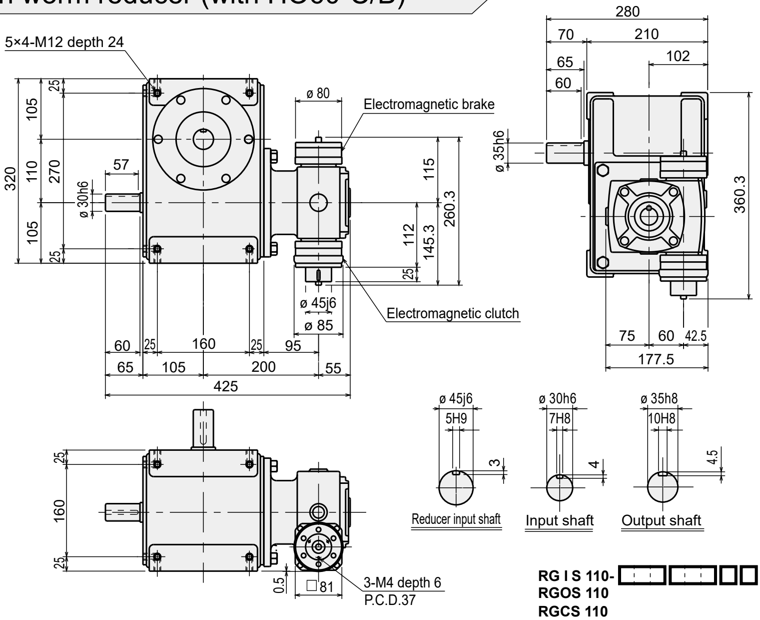

RG I S 110-☐☐☐☐S☐-NWN06☐YG
RGOS 110
RGCS 110

With worm reducer (without HO60-C/B)

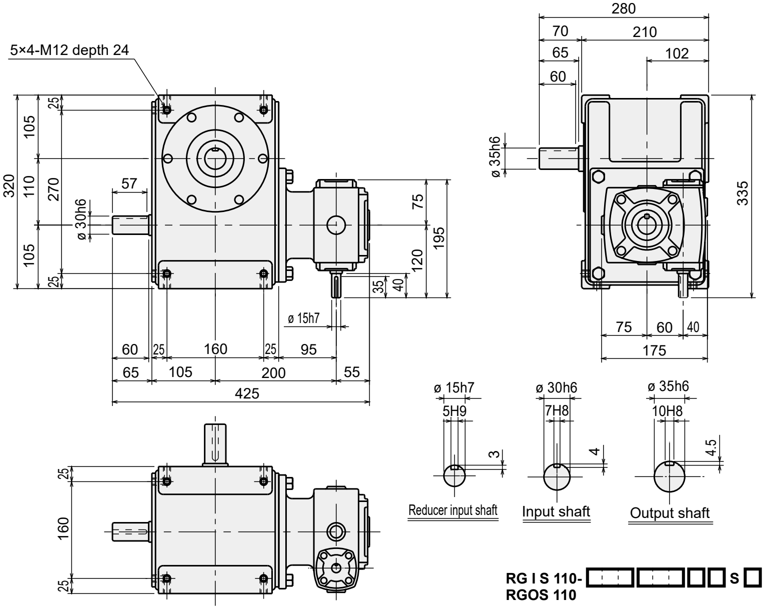

RG I S 110-☐☐☐☐S☐-NWN06☐NG
RGOS 110
RGCS 110

With Torque saver (TSF11)

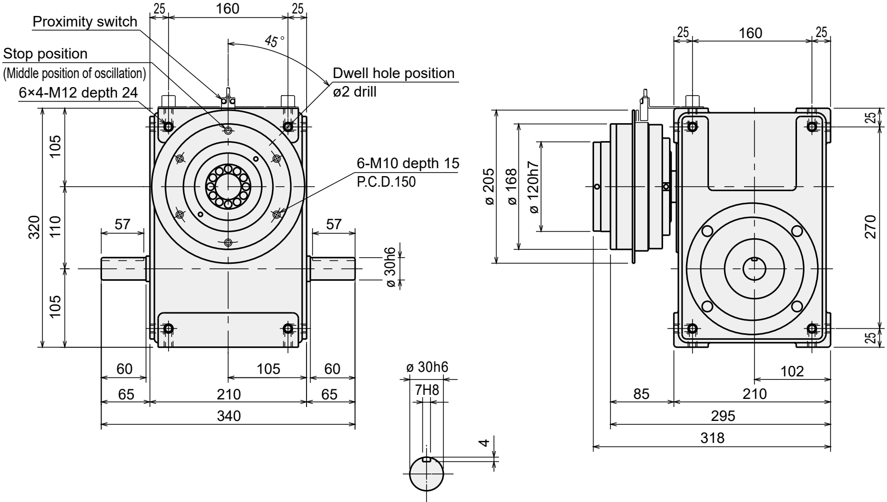

Input shaft

RG I S 110-☐☐☐S☐-NNF-11☐
RGOS 110
RGCS 110

With Torque guard (TGX70)

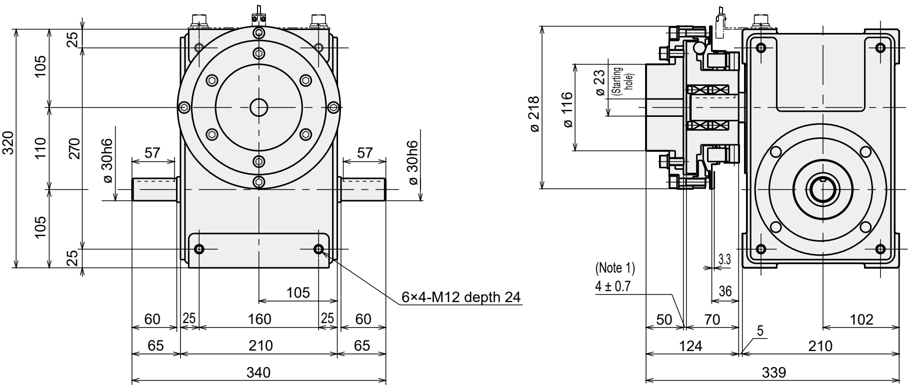

RG I S 110-☐☐☐S☐-NNX-70☐
RGOS 110
RGCS 110

Note 1: Attach to the equipment within the dimensions specified.

Dimensions with options

With the hollow shaft geared motor (0.75 kW)

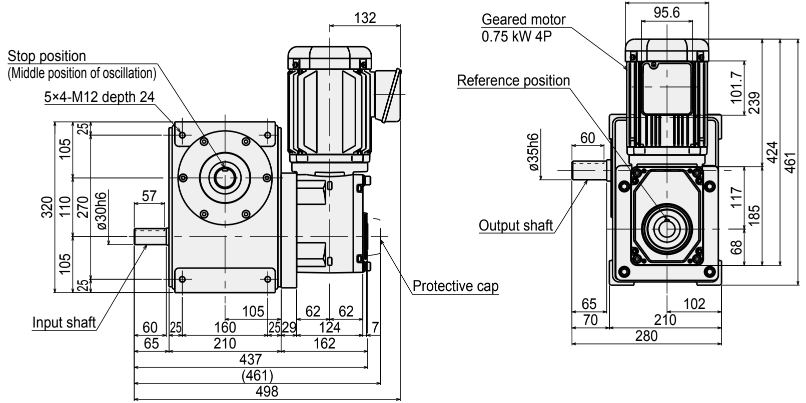

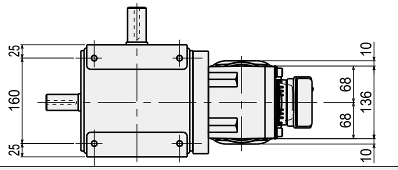

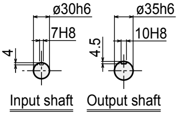

RG I S 110-☐☐☐☐S☐–NHNGKS☐F
RGOS 110
RGCS 110

With the hollow shaft geared motor (1.5 kW)

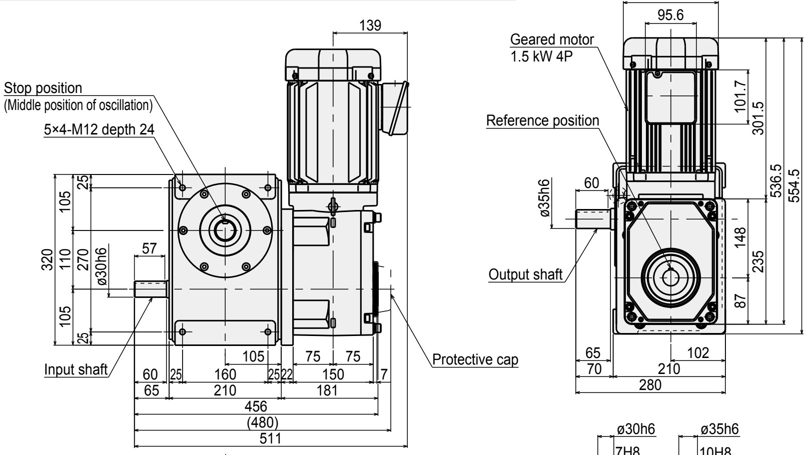

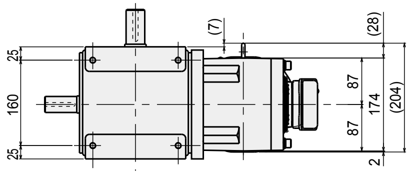

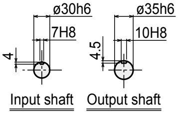

RG I S 110-☐☐☐☐S☐–NHNGLS☐F
RGOS 110
RGCS 110

● MEMO

Difference between shafts: 110 mm Flange shaft

Standard

Index	**RG I S 110**
Oscillator	**RGOS 110**
Reducer	**RGCS 110**

● Standard specifications

Dimensions

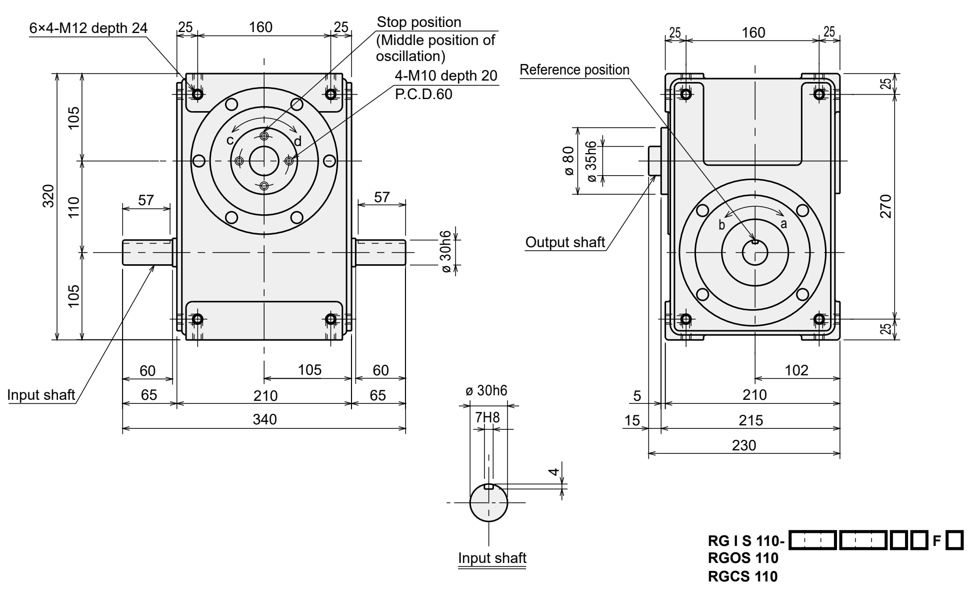

RG I S 110-□□□□□□□□F□
RGOS 110
RGCS 110

Installation position and oil supply/drain port and oil level gauge positions

Installation position	1	2	3
Series	**RGIS/RGOS/RGCS**	**RGIS/RGOS/RGCS**	**RGIS/RGOS/RGCS**
Dimensions	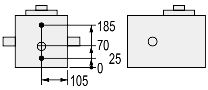	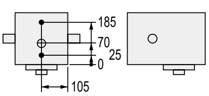	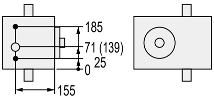 The dimensions in ( ) are for RGOS.

- ● Oil fill/drain port (Rc$^3/_8$)
- ○ Oil level gauge (ø 30)

Installation position	4	5	6	
Series	**RGIS/RGOS/RGCS**	**RGIS/RGOS/RGCS**	**RGIS/RGCS**	**RGOS**
Dimensions	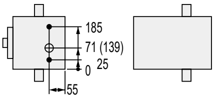 The dimensions in ( ) are for RGOS.	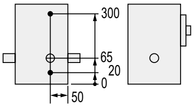	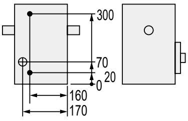	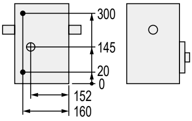

Characteristics

Descriptions	Unit	Characteristics	
		Output shaft	Input shaft
Allowable thrust force	N	4900	3500
Allowable radial force	N	6800	3600
Allowable bending moment	N·m	350	-
Moment of inertia	kg·m^2	1.38×10^{-2}	1.36×10^{-2}

Descriptions	Unit	Characteristics
Internal frictional torque (Tin)	N·m	15
Product weight	kg	60
Oil level	ℓ	3.8
Paint color		Silver

Accuracy

Index accuracy (sec.)		
Indexing accuracy	1 dwell	±30
	2 dwell	±60
	3 dwell	±90
	4 dwell	±120
Repeatability		15

Oscillating accuracy (sec.)	
Indexing accuracy	±60
Repeatability	15

* For the dwell accuracy, please contact CKD.

List of index angles

Index series **RGIS 110** Cam curve/MS

	Total index angle (θt) / Index number (n)	90	120	150	180	210	240	270	300	330
1 dwell	2							○	○	○
	3				○	○	○	○	○	○
	4			○	○	○	○	○	○	○
	5		○	○	○	○	○	○	○	○
	6	○	○	○	○	○	○	○	○	○
	8	○	○	○	○	○	○	○	○	○
	9	○	○	○	○	○	○	○	○	○
	10	○	○	○	○	○	○	○	○	○
	12	○	○	○	○	○	○	○	○	○
	15	○	○	○	○	○	○	○	○	○
	16	○	○	○	○	○	○	○	○	○
2 dwell	16		○	○	○	○	○	○	○	○
	18		○	○	○	○	○	○	○	○
	20	○	○	○	○	○	○	○	○	○
	24	○	○	○	○	○	○	○	○	○
	30	○	○	○	○	○	○	○	○	○
	32	○	○	○	○	○	○	○	○	○
3 dwell	24			○	○	○	○	○	○	○
	30		○	○	○	○	○	○	○	○
	36	○	○	○	○	○	○	○	○	○
	48	○	○	○	○	○	○	○	○	○
4 dwell	32				○	○	○	○	○	○
	36			○	○	○	○	○	○	○
	40			○	○	○	○	○	○	○
	48		○	○	○	○	○	○	○	○

Reducer series **RGCS 110**

Total index angle (θt) / Reduction ratio (id)	360
1/3	○
1/4	○
1/5	○
1/6	○
1/8	○
1/9	○
1/10	○
1/12	○

Oscillating series **RGOS 110** Cam curve/MS

Total index angle (θt) / Oscillating angle (ψ)	90	120	180	240	300	360
120						○
90					○	○
60			○	○	○	○
45			○	○	○	○
30			○	○	○	○

Index	RG I S 110
Oscillator	RGOS 110
Reducer	RGCS 110

● Dimensions with options

With worm reducer (with HO60-C/B)

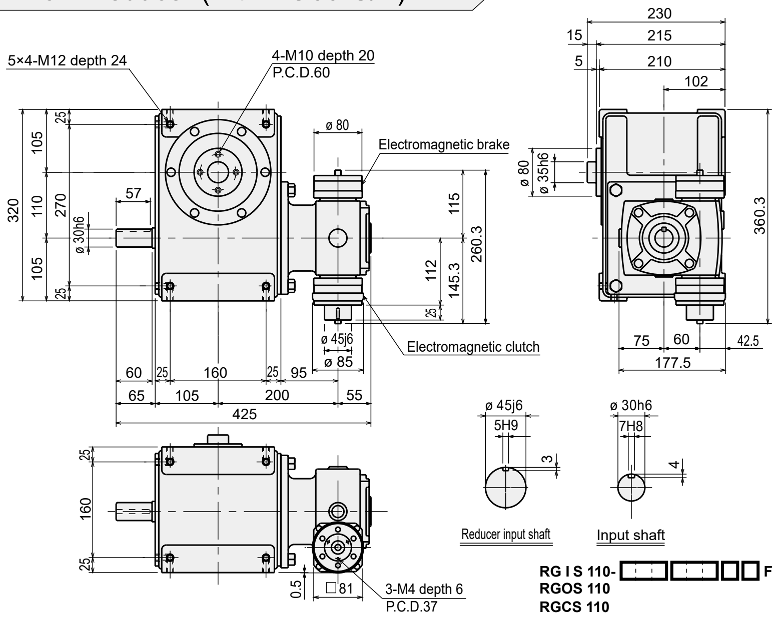

RG I S 110-☐☐☐☐F☐-NWN06☐YG
RGOS 110
RGCS 110

With worm reducer (without HO60-C/B)

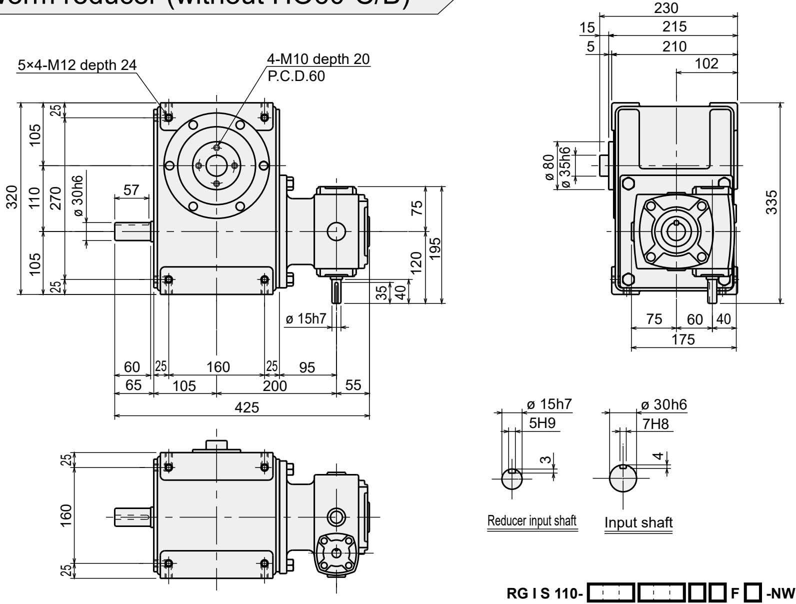

RG I S 110-☐☐☐☐F☐-NWN06☐NG
RGOS 110
RGCS 110

With the hollow shaft geared motor (0.75 kW)

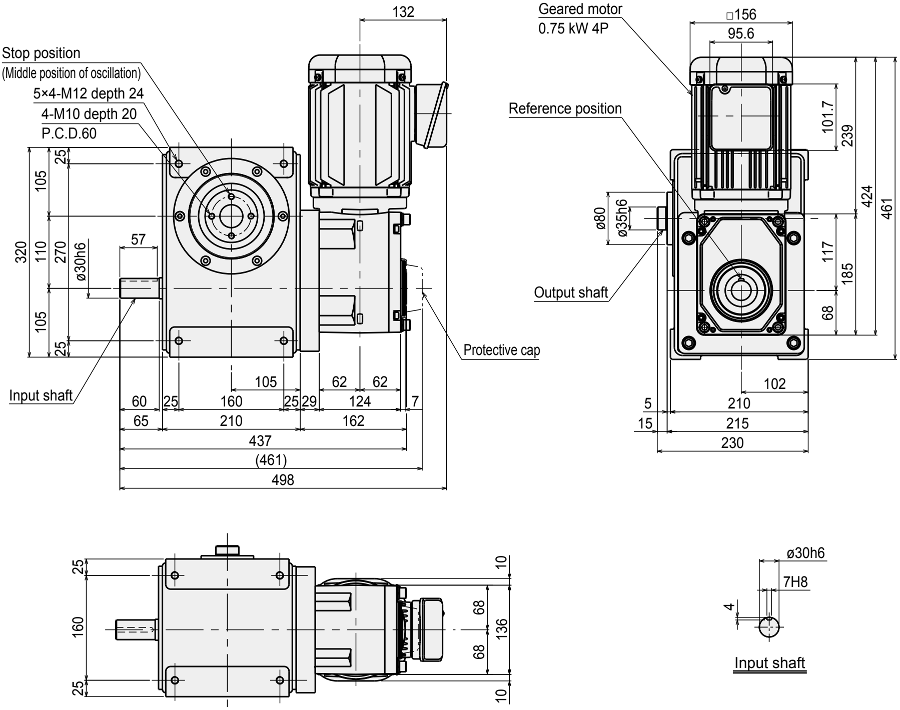

RG I S 110-☐☐☐☐☐☐☐☐ F ☐ -NHNGKS ☐ F
RGOS 110
RGCS 110

Index	RG I S 110
Oscillator	RGOS 110
Reducer	RGCS 110

● Dimensions with options

With the hollow shaft geared motor (1.5 kW)

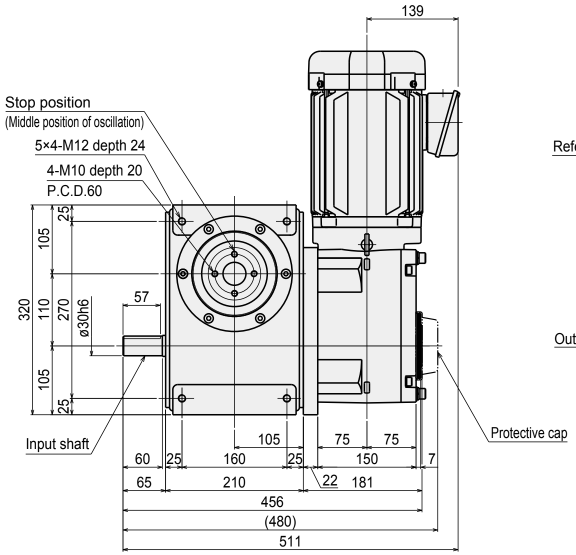

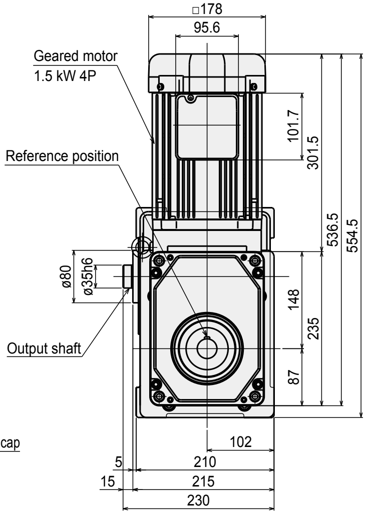

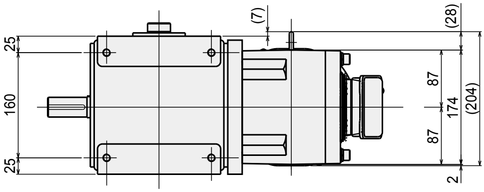

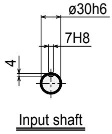

Input shaft

RG I S 110-☐☐☐☐☐☐☐☐F☐−NHNGLS☐F
RGOS 110
RGCS 110

MEMO

Difference between shafts: **140** mm Straight shaft

Standard

Index	**RG I S 140**
Oscillator	**RGOS 140**
Reducer	**RGCS 140**

● Standard specifications

Dimensions

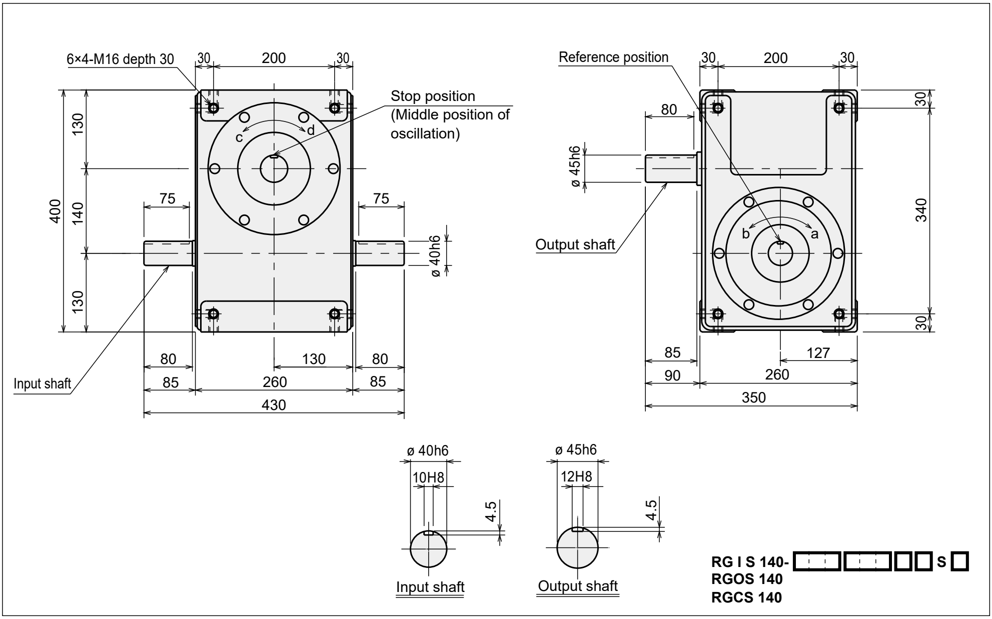

Installation position and oil supply/drain port and oil level gauge positions

Installation position	1	2	3
Series	**RGIS/RGOS/RGCS**	**RGIS/RGOS/RGCS**	**RGIS/RGOS/RGCS**
Dimensions	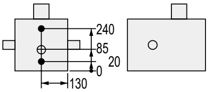	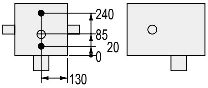	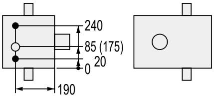 The dimensions in ( ) are for RGOS.

- ● Oil fill/drain port (Rc$^{3}/_{8}$)
- ○ Oil level gauge (ø 30)

Installation position	4	5	6	
Series	**RGIS/RGOS/RGCS**	**RGIS/RGOS/RGCS**	**RGIS/RGCS**	**RGOS**
Dimensions	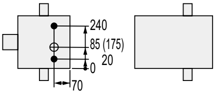 The dimensions in ( ) are for RGOS.	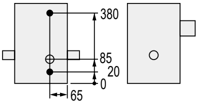	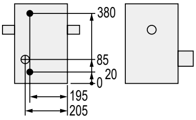	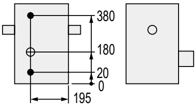

Characteristics

Descriptions	Unit	Characteristics	
		Output shaft	Input shaft
Allowable thrust force	N	7300	4500
Allowable radial force	N	9500	4200
Allowable bending moment	N·m	450	-
Moment of inertia	$kg{\cdot}m^2$	2.53 × 10^{-2}	5.42 × 10^{-2}

Descriptions	Unit	Characteristics
Internal frictional torque (Tin)	N·m	24
Product weight	kg	115
Oil level	ℓ	6
Paint color		Silver

Accuracy

Index accuracy (sec.)		
Indexing accuracy	1 dwell	±30
	2 dwell	±60
	3 dwell	±90
	4 dwell	±120
Repeatability		15

Oscillating accuracy (sec.)	
Indexing accuracy	±60
Repeatability	15

* For the dwell accuracy, please contact CKD.

List of index angles

Index series **RGIS 140** Cam curve/MS

	Total index angle (θt) / Index number (n)	90	120	150	180	210	240	270	300	330
1 dwell	2							○	○	○
	3				○	○	○	○	○	○
	4			○	○	○	○	○	○	○
	5		○	○	○	○	○	○	○	○
	6	○	○	○	○	○	○	○	○	○
	8	○	○	○	○	○	○	○	○	○
	9	○	○	○	○	○	○	○	○	○
	10	○	○	○	○	○	○	○	○	○
	12	○	○	○	○	○	○	○	○	○
	15	○	○	○	○	○	○	○	○	○
	16	○	○	○	○	○	○	○	○	○
2 dwell	16		○	○	○	○	○	○	○	○
	18		○	○	○	○	○	○	○	○
	20	○	○	○	○	○	○	○	○	○
	24	○	○	○	○	○	○	○	○	○
	30	○	○	○	○	○	○	○	○	○
	32	○	○	○	○	○	○	○	○	○
3 dwell	24			○	○	○	○	○	○	○
	30		○	○	○	○	○	○	○	○
	36	○	○	○	○	○	○	○	○	○
	48	○	○	○	○	○	○	○	○	○
4 dwell	32				○	○	○	○	○	○
	36			○	○	○	○	○	○	○
	40			○	○	○	○	○	○	○
	48		○	○	○	○	○	○	○	○

Oscillating series **RGOS 140** Cam curve/MS

Total index angle (θt) / Oscillating angle (ψ)	90	120	180	240	300	360
120						○
90					○	○
60			○	○	○	○
45			○	○	○	○
30			○	○	○	○

Reducer series **RGCS 140**

Total index angle (θt) / Reduction ratio (id)	360
1/3	○
1/4	○
1/5	○
1/6	○
1/8	○
1/9	○
1/10	○
1/12	○

Index	RG I S 140
Oscillator	RGOS 140
Reducer	RGCS 140

● Dimensions with options

With worm reducer (with HO80-C/B)

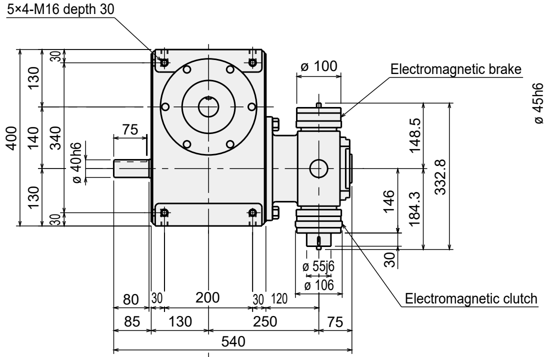

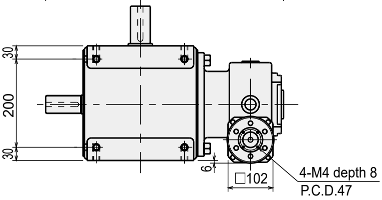

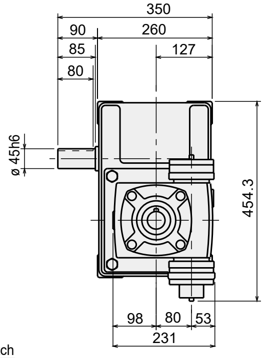

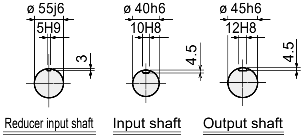

RG I S 140-☐☐☐☐☐☐☐☐ S ☐ -NWN08 ☐ YG
RGOS 140
RGCS 140

With worm reducer (without HO80-C/B)

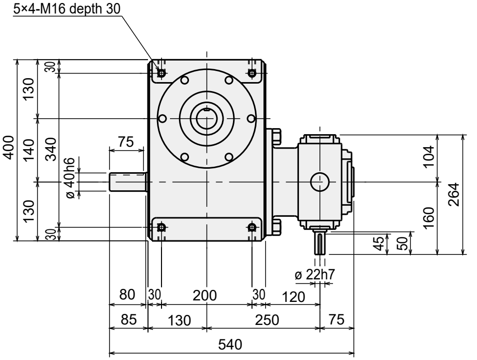

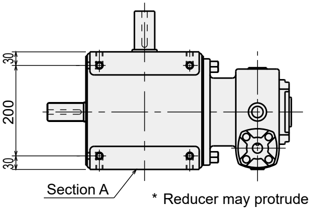

* Reducer may protrude from the housing end face (section A).

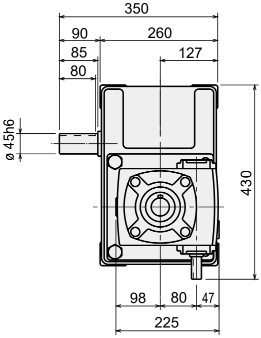

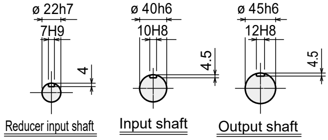

RG I S 140-☐☐☐☐☐☐☐☐ S ☐ -NWN08 ☐ NG
RGOS 140
RGCS 140

With Torque saver (TSF14)

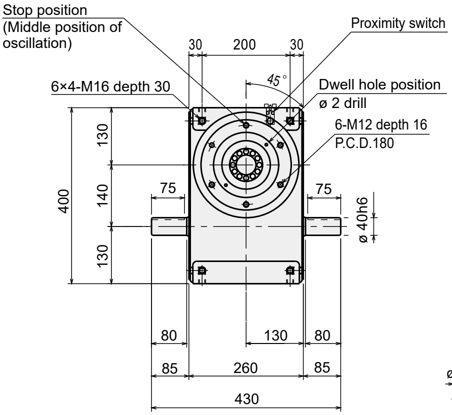

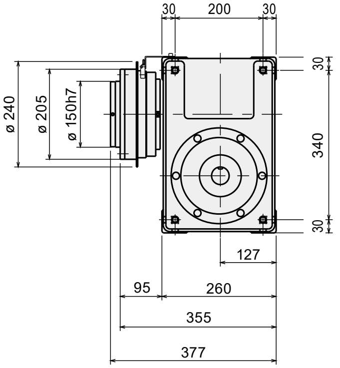

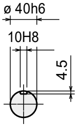

Input shaft

RG I S 140-☐☐☐☐ **S** ☐ **-NNF-14** ☐
RGOS 140
RGCS 140

● Dimensions with options

With the hollow shaft geared motor (1.5 kW)

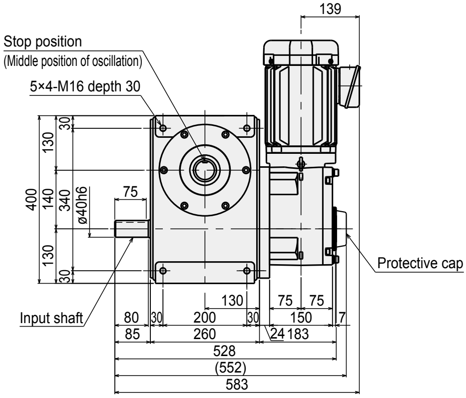

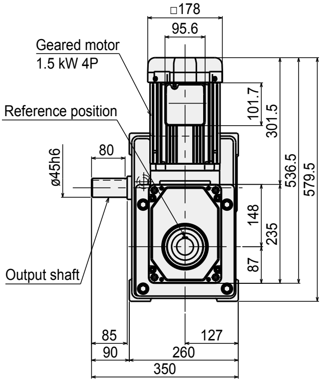

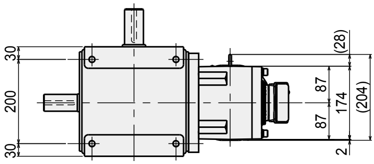

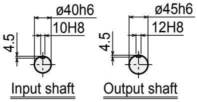

RG I S 140-□□□□S□-NHNGLS□F
RGOS 140
RGCS 140

With the hollow shaft geared motor (2.2 kW)

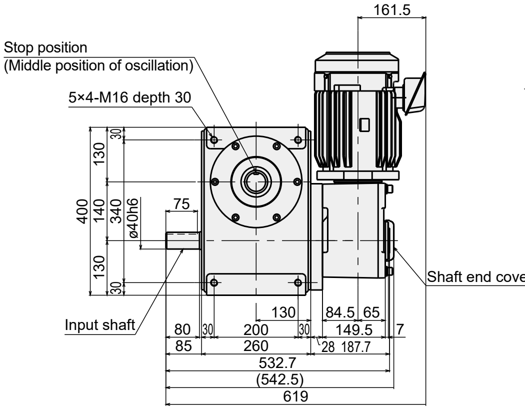

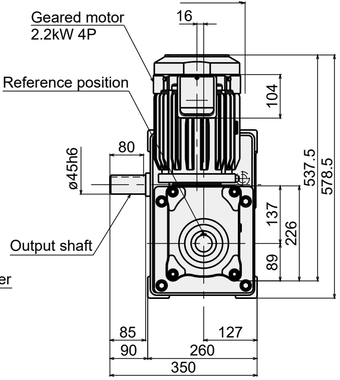

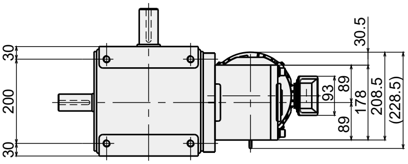

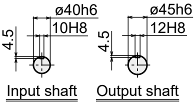

RG I S 140-□□□□S□-NHNTMS□F
RGOS 140
RGCS 140

● MEMO

Difference between shafts: **140** mm Flange shaft

Standard

Index	**RG I S 140**
Oscillator	**RGOS 140**
Reducer	**RGCS 140**

● Standard specifications

Dimensions

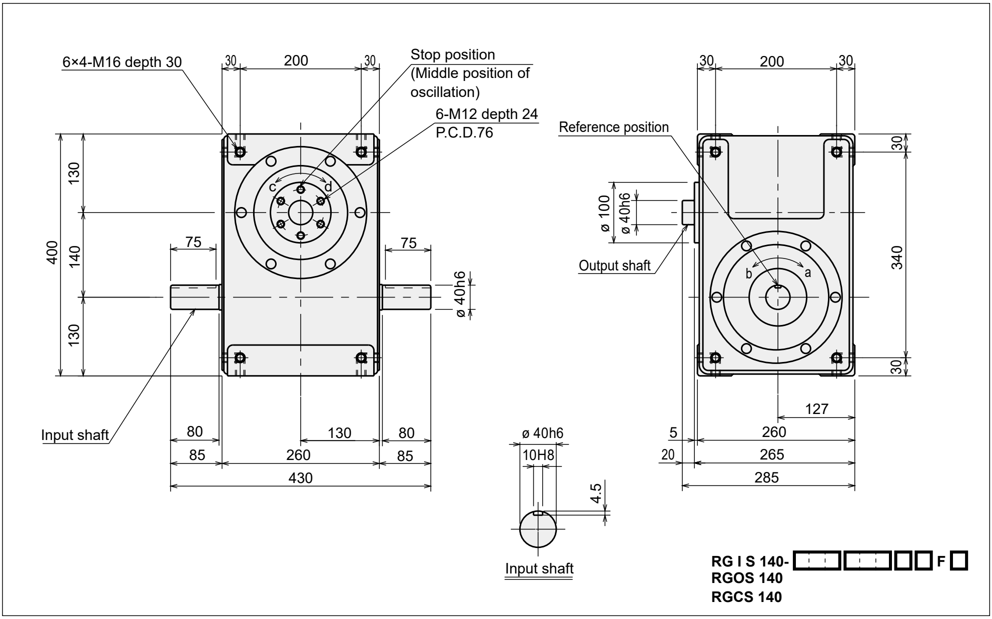

Installation position and oil supply/drain port and oil level gauge positions

Installation position	1	2	3
Series	**RGIS/RGOS/RGCS**	**RGIS/RGOS/RGCS**	**RGIS/RGOS/RGCS**
Dimensions	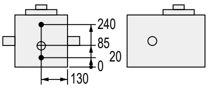	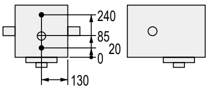	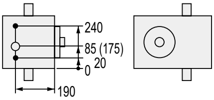 The dimensions in ( ) are for RGOS.

- ● Oil fill/drain port (Rc$^{3}/_{8}$)
- ○ Oil level gauge (ø 30)

Installation position	4	5	6	
Series	**RGIS/RGOS/RGCS**	**RGIS/RGOS/RGCS**	**RGIS/RGCS**	**RGOS**
Dimensions	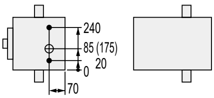 The dimensions in ( ) are for RGOS.	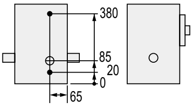	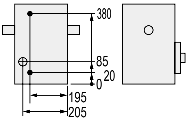	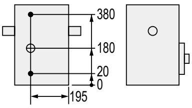

Characteristics

Descriptions	Unit	Characteristics	
		Output shaft	Input shaft
Allowable thrust force	N	7300	4500
Allowable radial force	N	9500	4200
Allowable bending moment	N·m	600	-
Moment of inertia	$kg{\cdot}m^2$	3.93×10^{-2}	5.42×10^{-2}

Descriptions	Unit	Characteristics
Internal frictional torque (Tin)	N·m	24
Product weight	kg	115
Oil level	ℓ	6
Paint color		Silver

Accuracy

Index accuracy (sec.)		
Indexing accuracy	1 dwell	±30
	2 dwell	±60
	3 dwell	±90
	4 dwell	±120
Repeatability		15

Oscillating accuracy (sec.)	
Indexing accuracy	±60
Repeatability	15

* For the dwell accuracy, please contact CKD.

Reducer series **RGCS 140**

Total index angle (θt) / Reduction ratio (id)	360
1/3	○
1/4	○
1/5	○
1/6	○
1/8	○
1/9	○
1/10	○
1/12	○

List of index angles

Index series **RGIS 140** Cam curve/MS

	Total index angle (θt) / Index number (n)	90	120	150	180	210	240	270	300	330
1 dwell	2							○	○	○
	3				○	○	○	○	○	○
	4			○	○	○	○	○	○	○
	5		○	○	○	○	○	○	○	○
	6	○	○	○	○	○	○	○	○	○
	8	○	○	○	○	○	○	○	○	○
	9	○	○	○	○	○	○	○	○	○
	10	○	○	○	○	○	○	○	○	○
	12	○	○	○	○	○	○	○	○	○
	15	○	○	○	○	○	○	○	○	○
	16	○	○	○	○	○	○	○	○	○
2 dwell	16		○	○	○	○	○	○	○	○
	18		○	○	○	○	○	○	○	○
	20	○	○	○	○	○	○	○	○	○
	24	○	○	○	○	○	○	○	○	○
	30	○	○	○	○	○	○	○	○	○
	32	○	○	○	○	○	○	○	○	○
3 dwell	24			○	○	○	○	○	○	○
	30		○	○	○	○	○	○	○	○
	36	○	○	○	○	○	○	○	○	○
	48	○	○	○	○	○	○	○	○	○
4 dwell	32				○	○	○	○	○	○
	36			○	○	○	○	○	○	○
	40			○	○	○	○	○	○	○
	48		○	○	○	○	○	○	○	○

Oscillating series **RGOS 140** Cam curve/MS

Total index angle (θt) / Oscillating angle (ψ)	90	120	180	240	300	360
120						○
90					○	○
60			○	○	○	○
45			○	○	○	○
30			○	○	○	○

Dimensions with options

With worm reducer (with HO80-C/B)

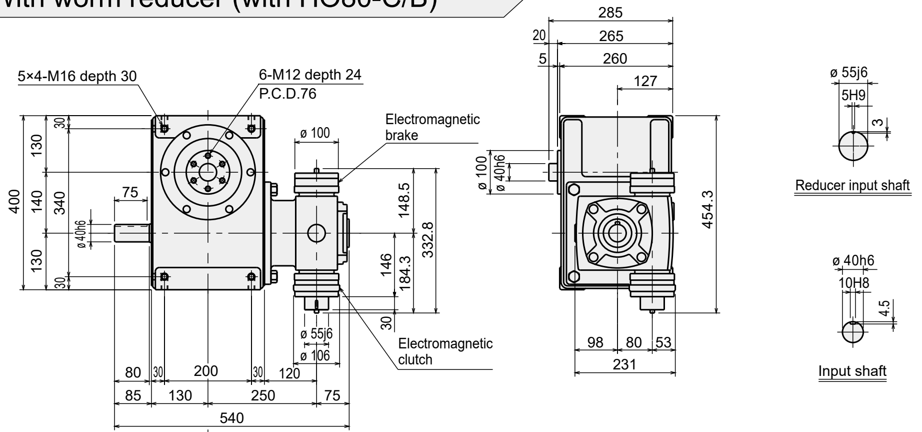

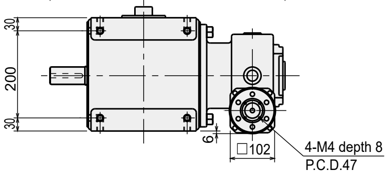

RG I S 140-☐☐☐☐F☐-NWN08☐YG
RGOS 140
RGCS 140

With worm reducer (without HO80-C/B)

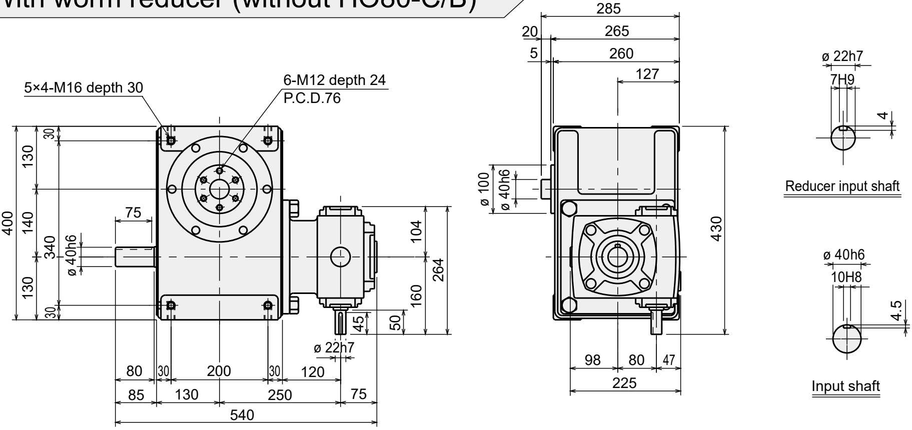

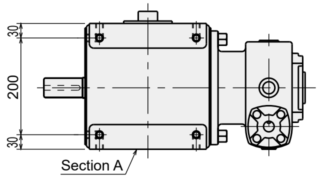

* Reducer may protrude from the housing end face (section A).

RG I S 140-☐☐☐☐F☐-NWN08☐NG
RGOS 140
RGCS 140

With the hollow shaft geared motor (1.5 kW)

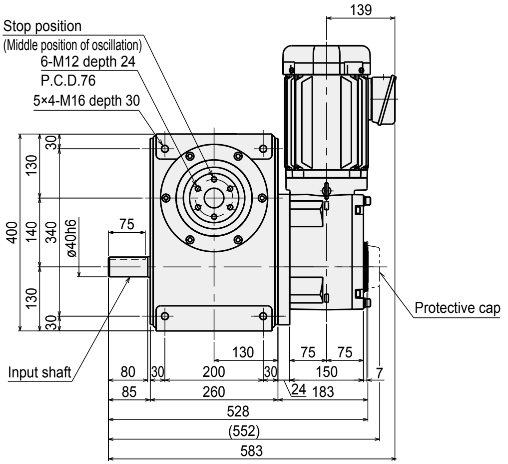

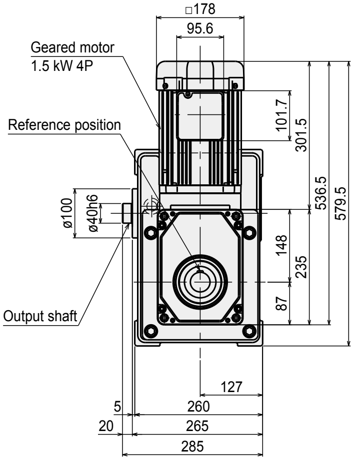

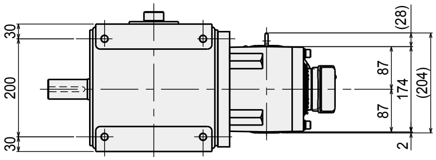

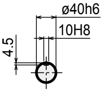

Input shaft

RG I S 140-□□□□F□-NHNGLS□F
RGOS 140
RGCS 140

Index	**RG I S 140**
Oscillator	**RGOS 140**
Reducer	**RGCS 140**

● Dimensions with options

CAD

With the hollow shaft geared motor (2.2 kW)

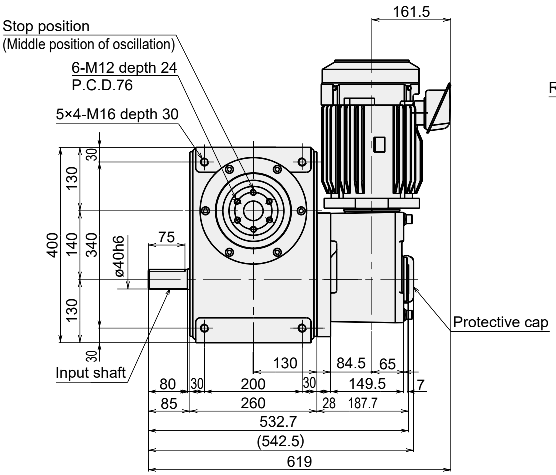

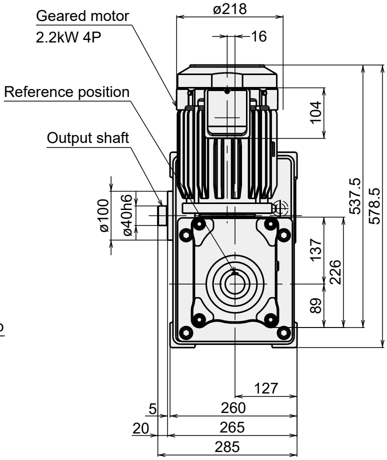

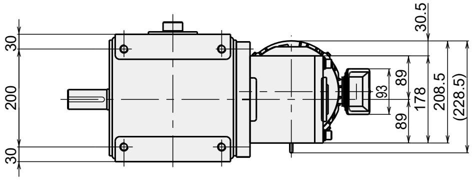

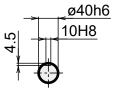

Input shaft

RG I S 140-☐☐☐☐☐☐☐☐ F ☐-NHNTMS☐ F
RGOS 140
RGCS 140

● MEMO

Difference between shafts: 180 mm Straight shaft

Standard

Index	RG I S 180
Oscillator	RGOS 180
Reducer	RGCS 180

● Standard specifications

Dimensions

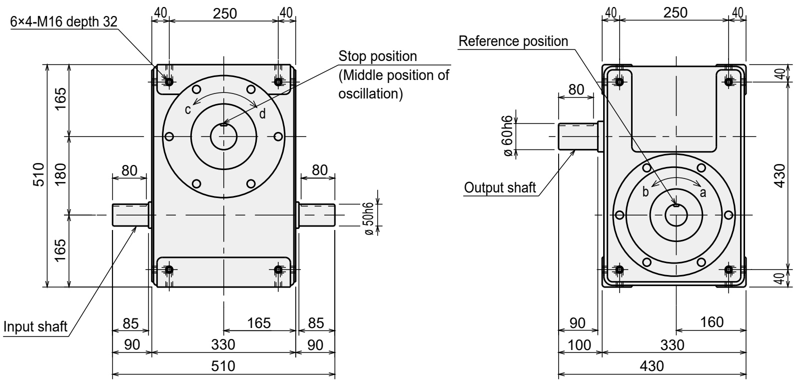

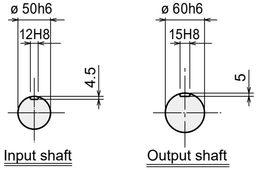

Input shaft Output shaft

RG I S 180-□□□□s□
RGOS 180
RGCS 180

Installation position and oil supply/drain port and oil level gauge positions

Installation position	1	2	3
Series	**RGIS/RGOS/RGCS**	**RGIS/RGOS/RGCS**	**RGIS/RGOS/RGCS**
Dimensions	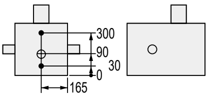	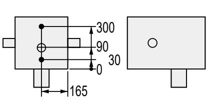	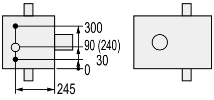 The dimensions in ( ) are for RGOS.

- ● Oil fill/drain port (Rc$^1/_2$)
- ○ Oil level gauge (ø 30)

Installation position	4	5	6	
Series	**RGIS/RGOS/RGCS**	**RGIS/RGOS/RGCS**	**RGIS/RGCS**	**RGOS**
Dimensions	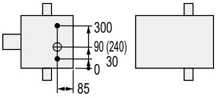 The dimensions in ( ) are for RGOS.	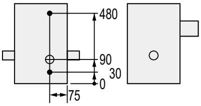	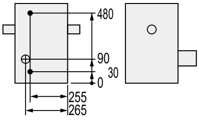	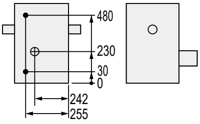

Characteristics

Descriptions	Unit	Characteristics	
		Output shaft	Input shaft
Allowable thrust force	N	12000	6800
Allowable radial force	N	15000	6500
Allowable bending moment	N·m	700	-
Moment of inertia	kg·m^2	0.10	0.37

Descriptions	Unit	Characteristics
Internal frictional torque (Tin)	N·m	39
Product weight	kg	230
Oil level	ℓ	12.5
Paint color		Silver

Accuracy

Index accuracy (sec.)		
Indexing accuracy	1 dwell	±30
	2 dwell	±60
	3 dwell	±90
	4 dwell	±120
Repeatability		15

Oscillating accuracy (sec.)	
Indexing accuracy	±60
Repeatability	15

* For the dwell accuracy, please contact CKD.

List of index angles

Index series **RGIS 180** Cam curve/MS

	Total index angle (θt) Index number (n)	90	120	150	180	210	240	270	300	330
1 dwell	2							○	○	○
	3				○	○	○	○	○	○
	4			○	○	○	○	○	○	○
	5		○	○	○	○	○	○	○	○
	6	○	○	○	○	○	○	○	○	○
	8	○	○	○	○	○	○	○	○	○
	9	○	○	○	○	○	○	○	○	○
	10	○	○	○	○	○	○	○	○	○
	12	○	○	○	○	○	○	○	○	○
	15	○	○	○	○	○	○	○	○	○
	16	○	○	○	○	○	○	○	○	○
2 dwell	16		○	○	○	○	○	○	○	○
	18		○	○	○	○	○	○	○	○
	20	○	○	○	○	○	○	○	○	○
	24	○	○	○	○	○	○	○	○	○
	30	○	○	○	○	○	○	○	○	○
	32	○	○	○	○	○	○	○	○	○
3 dwell	24			○	○	○	○	○	○	○
	30		○	○	○	○	○	○	○	○
	36	○	○	○	○	○	○	○	○	○
	48	○	○	○	○	○	○	○	○	○
4 dwell	32				○	○	○	○	○	○
	36			○	○	○	○	○	○	○
	40			○	○	○	○	○	○	○
	48		○	○	○	○	○	○	○	○

Reducer series **RGCS 180**

Total index angle (θt) Reduction ratio (id)	360
1/3	○
1/4	○
1/5	○
1/6	○
1/8	○
1/9	○
1/10	○
1/12	○

Oscillating series **RGOS 180** Cam curve/MS

Total index angle (θt) Oscillating angle (ψ)	90	120	180	240	300	360
120						○
90					○	○
60			○	○	○	○
45			○	○	○	○
30			○	○	○	○

Index	RG I S 180
Oscillator	RGOS 180
Reducer	RGCS 180

● Dimensions with options

With worm reducer (with HO100-C/B)

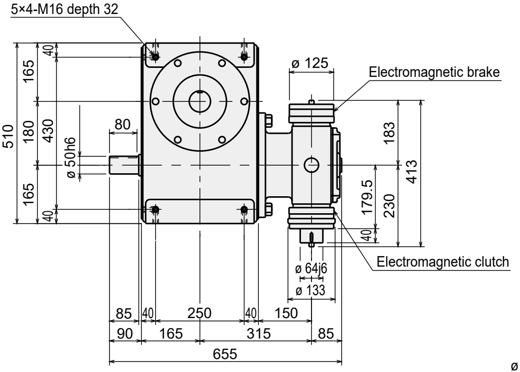

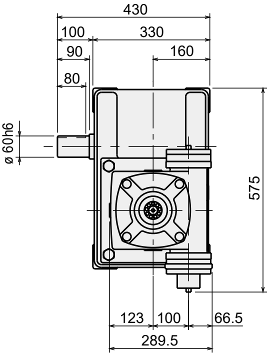

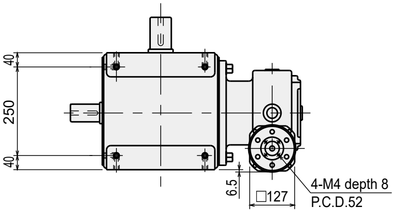

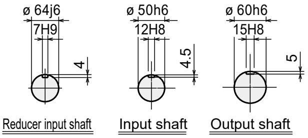

RG I S 180-☐☐☐☐S☐-NWN10☐YG
RGOS
RGCS

With worm reducer (without HO100-C/B)

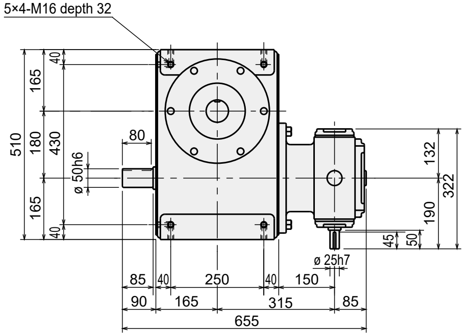

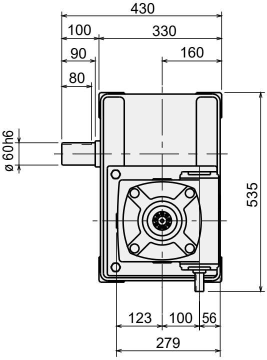

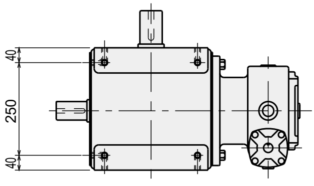

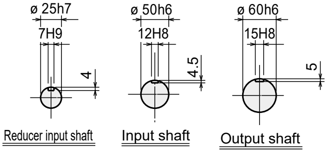

RG I S 180-☐☐☐☐S☐-NWN10☐NG
RGOS
RGCS

With Torque saver (TSF18)

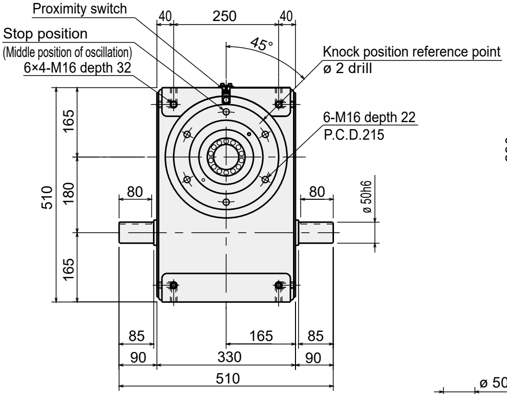

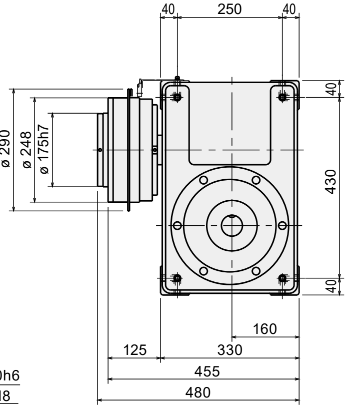

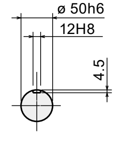

Input shaft

RG I S 180-☐☐☐☐☐☐☐☐ S ☐ -NNF-18 ☐
RGOS 180
RGCS 180

● Dimensions with options

With the hollow shaft geared motor (2.2 kW)

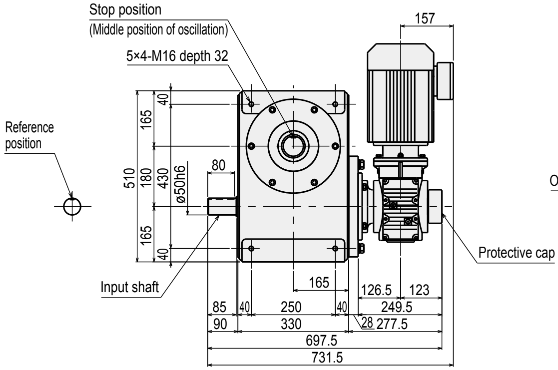

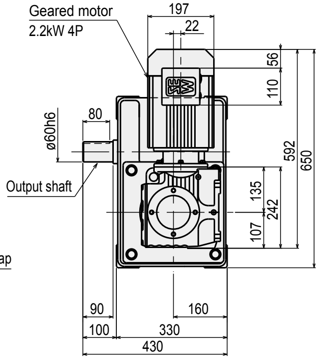

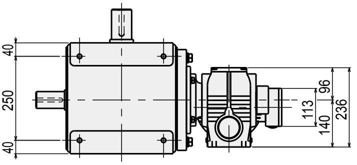

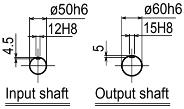

RG I S 180-☐☐☐☐S☐-NHNWMS☐F
RGOS 180
RGCS 180

With the hollow shaft geared motor (3.7 kW)

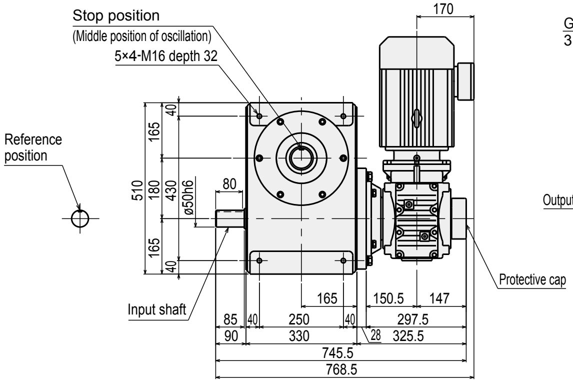

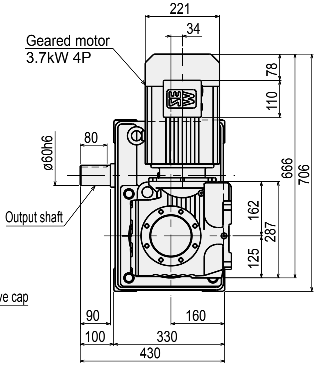

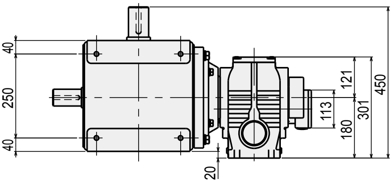

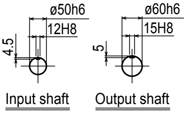

RG I S 180-☐☐☐☐S☐-NHNWNS☐F
RGOS 180
RGCS 180

MEMO

Standard

Index	RG I S 180
Oscillator	RGOS 180
Reducer	RGCS 180

● Standard specifications

Dimensions

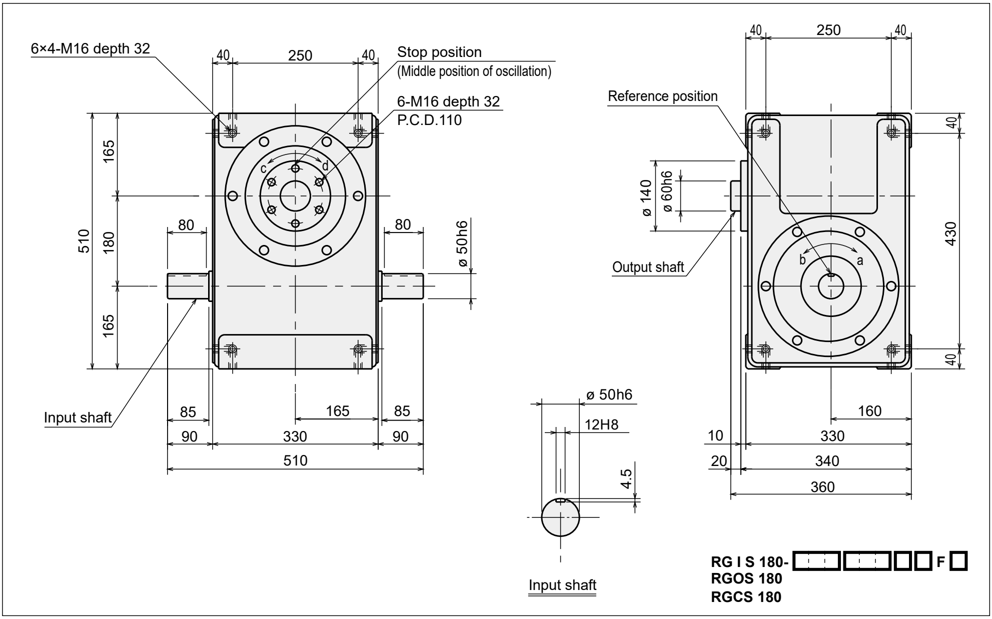

Installation position and oil supply/drain port and oil level gauge positions

Installation position	1	2	3
Series	RGIS/RGOS/RGCS	RGIS/RGOS/RGCS	RGIS/RGOS/RGCS
Dimensions	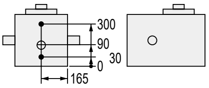	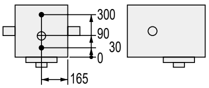	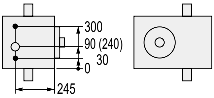 The dimensions in ( ) are for RGOS.

- ● Oil fill/drain port (Rc$^1/_2$)
- ○ Oil level gauge (ø 30)

Installation position	4	5	6	
Series	RGIS/RGOS/RGCS	RGIS/RGOS/RGCS	RGIS/RGCS	RGOS
Dimensions	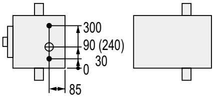 The dimensions in ( ) are for RGOS.	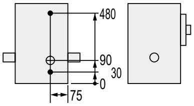	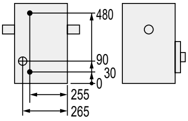	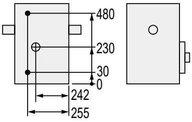

Characteristics

Descriptions	Unit	Characteristics	
		Output shaft	Input shaft
Allowable thrust force	N	12000	6800
Allowable radial force	N	19000	6500
Allowable bending moment	N·m	1000	-
Moment of inertia	$kg\cdot m^2$	0.15	0.37

Descriptions	Unit	Characteristics
Internal frictional torque (Tin)	N·m	39
Product weight	kg	230
Oil level	ℓ	12.5
Paint color		Silver

Accuracy

Index accuracy (sec.)		
Indexing accuracy	1 dwell	±30
	2 dwell	±60
	3 dwell	±90
	4 dwell	±120
Repeatability		15

Oscillating accuracy (sec.)	
Indexing accuracy	±60
Repeatability	15

* For the dwell accuracy, please contact CKD.

List of index angles

Index series **RGIS 180** Cam curve/MS

	Total index angle (θt) / Index number (n)	90	120	150	180	210	240	270	300	330
1 dwell	2							○	○	○
	3				○	○	○	○	○	○
	4			○	○	○	○	○	○	○
	5		○	○	○	○	○	○	○	○
	6	○	○	○	○	○	○	○	○	○
	8	○	○	○	○	○	○	○	○	○
	9	○	○	○	○	○	○	○	○	○
	10	○	○	○	○	○	○	○	○	○
	12	○	○	○	○	○	○	○	○	○
	15	○	○	○	○	○	○	○	○	○
	16	○	○	○	○	○	○	○	○	○
2 dwell	16		○	○	○	○	○	○	○	○
	18		○	○	○	○	○	○	○	○
	20	○	○	○	○	○	○	○	○	○
	24	○	○	○	○	○	○	○	○	○
	30	○	○	○	○	○	○	○	○	○
	32	○	○	○	○	○	○	○	○	○
3 dwell	24			○	○	○	○	○	○	○
	30		○	○	○	○	○	○	○	○
	36	○	○	○	○	○	○	○	○	○
	48	○	○	○	○	○	○	○	○	○
4 dwell	32				○	○	○	○	○	○
	36			○	○	○	○	○	○	○
	40			○	○	○	○	○	○	○
	48		○	○	○	○	○	○	○	○

Reducer series **RGCS 180**

Total index angle (θt) / Reduction ratio (id)	360
1/3	○
1/4	○
1/5	○
1/6	○
1/8	○
1/9	○
1/10	○
1/12	○

Oscillating series **RGOS 180** Cam curve/MS

Total index angle (θt) / Oscillating angle (ψ)	90	120	180	240	300	360
120						○
90					○	○
60			○	○	○	○
45			○	○	○	○
30			○	○	○	○

● Dimensions with options

With worm reducer (with HO100-C/B)

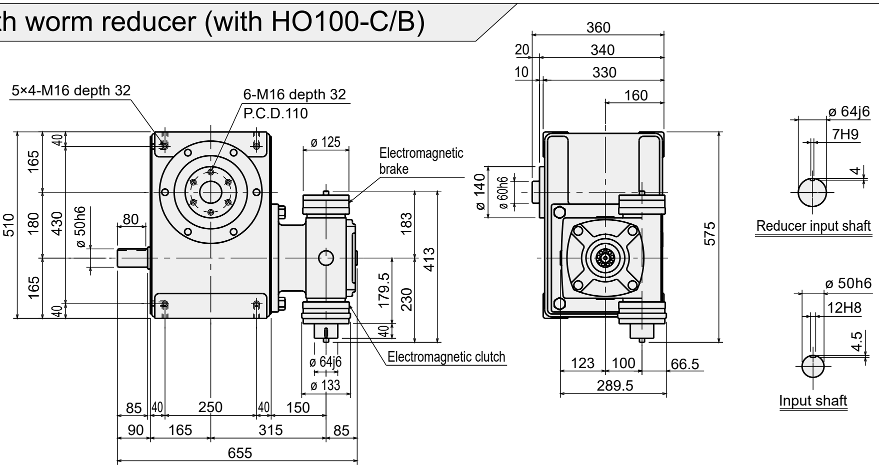

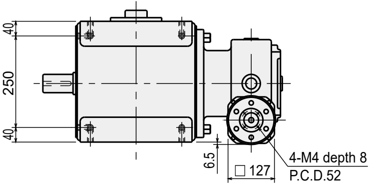

RG I S 180-☐☐☐☐F☐-NWN10☐YG
RGOS 180
RGCS 180

With worm reducer (without HO100-C/B)

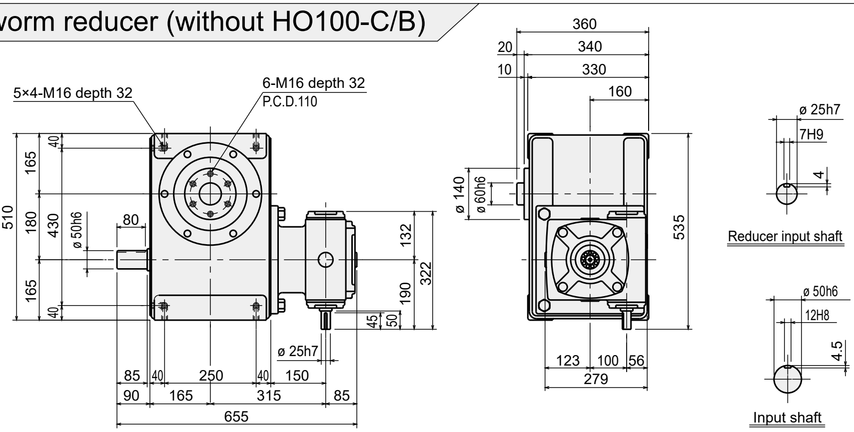

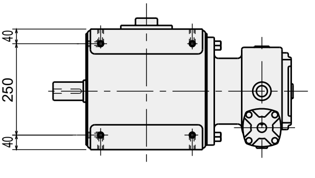

RG I S 180-☐☐☐☐F☐-NWN10☐NG
RGOS 180
RGCS 180

With the hollow shaft geared motor (2.2 kW)

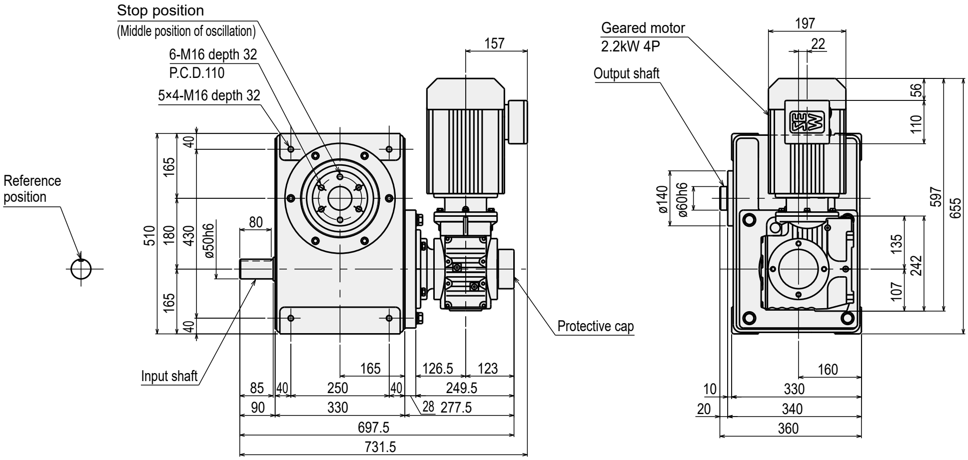

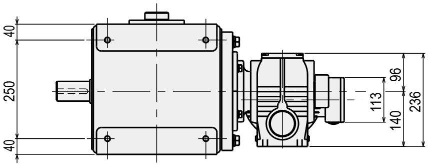

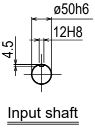

Input shaft

RG I S 180-☐☐☐☐ F ☐ -NHNWMS ☐ F
RGOS 180
RGCS 180

Dimensions with options

With the hollow shaft geared motor (3.7 kW)

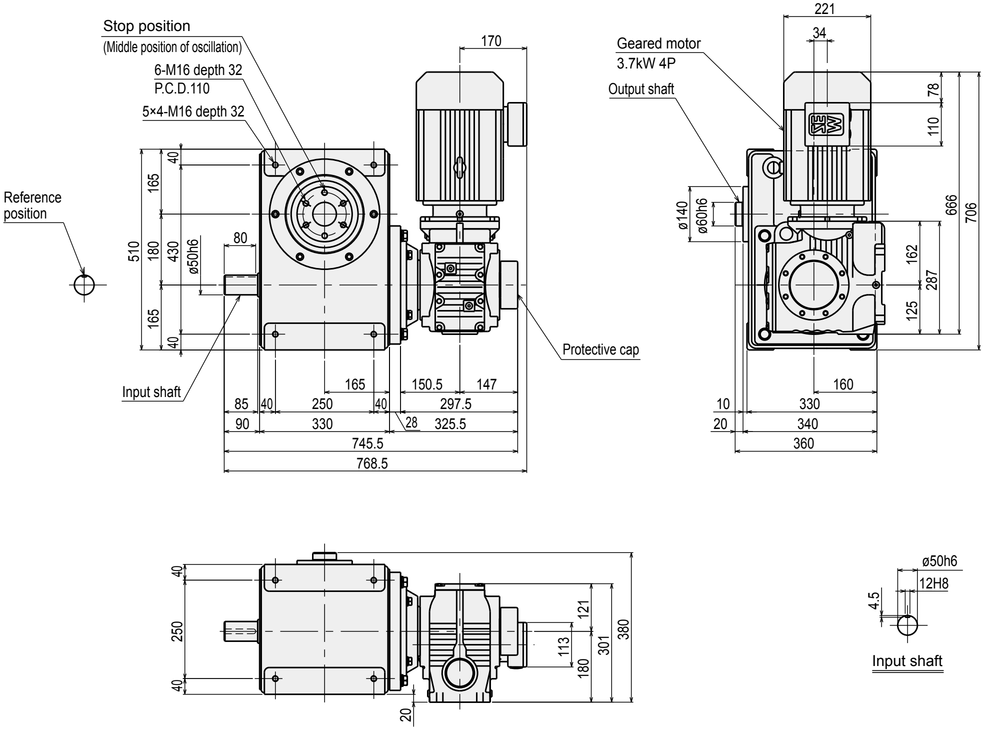

RG I S 180-☐☐☐☐F☐-NHNWNS☐F
RGOS 180
RGCS 180

● MEMO

Difference between shafts: **250** mm Straight shaft

Standard

Index	**RG I S 250**
Oscillator	**RGOS 250**
Reducer	**RGCS 250**

● Standard specifications

Dimensions

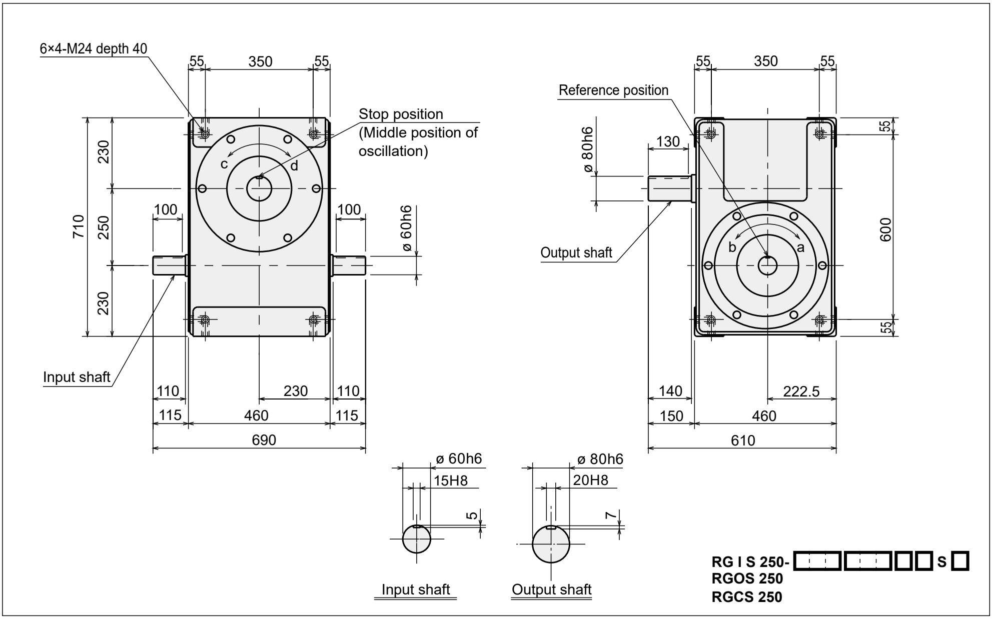

Installation position and oil supply/drain port and oil level gauge positions

Installation position	1	2	3
Series	**RGIS/RGOS/RGCS**	**RGIS/RGOS/RGCS**	**RGIS/RGOS/RGCS**
Dimensions	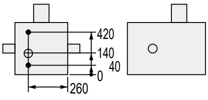	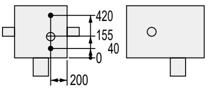	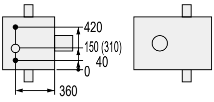 The dimensions in ( ) are for RGOS.

- ● Oil fill/drain port ($Rc^{1}/_{2}$)
- ○ Oil level gauge (ø 30)

Installation position	4	5	6	
Series	**RGIS/RGOS/RGCS**	**RGIS/RGOS/RGCS**	**RGIS/RGCS**	**RGOS**
Dimensions	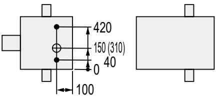 The dimensions in ( ) are for RGOS.	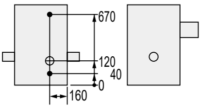	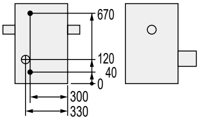	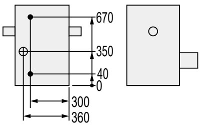

Characteristics

Descriptions	Unit	Characteristics	
		Output shaft	Input shaft
Allowable thrust force	N	26000	12000
Allowable radial force	N	28000	14000
Allowable bending moment	N·m	2500	-
Moment of inertia	kg·m^2	0.38	0.96

Descriptions	Unit	Characteristics
Internal frictional torque (Tin)	N·m	76
Product weight	kg	650
Oil level	ℓ	38
Paint color		Silver

Accuracy

Index accuracy (sec.)		
Indexing accuracy	1 dwell	±30
	2 dwell	±60
	3 dwell	±90
	4 dwell	±120
Repeatability		15

Oscillating accuracy (sec.)	
Indexing accuracy	±60
Repeatability	15

* For the dwell accuracy, please contact CKD.

List of index angles

Index series **RGIS 250** Cam curve/MS

	Total index angle (θt) Index number (n)	90	120	150	180	210	240	270	300	330
1 dwell	2							○	○	○
	3				○	○	○	○	○	○
	4			○	○	○	○	○	○	○
	5		○	○	○	○	○	○	○	○
	6	○	○	○	○	○	○	○	○	○
	8	○	○	○	○	○	○	○	○	○
	9	○	○	○	○	○	○	○	○	○
	10	○	○	○	○	○	○	○	○	○
	12	○	○	○	○	○	○	○	○	○
	15	○	○	○	○	○	○	○	○	○
	16	○	○	○	○	○	○	○	○	○
2 dwell	16		○	○	○	○	○	○	○	○
	18		○	○	○	○	○	○	○	○
	20	○	○	○	○	○	○	○	○	○
	24	○	○	○	○	○	○	○	○	○
	30	○	○	○	○	○	○	○	○	○
	32	○	○	○	○	○	○	○	○	○
3 dwell	24			○	○	○	○	○	○	○
	30		○	○	○	○	○	○	○	○
	36	○	○	○	○	○	○	○	○	○
	48	○	○	○	○	○	○	○	○	○
4 dwell	32				○	○	○	○	○	○
	36			○	○	○	○	○	○	○
	40			○	○	○	○	○	○	○
	48		○	○	○	○	○	○	○	○

Reducer series **RGCS 250**

Total index angle (θt) Reduction ratio (id)	360
1/3	○
1/4	○
1/5	○
1/6	○
1/8	○
1/9	○
1/10	○
1/12	○

Oscillating series **RGOS 250** Cam curve/MS

Total index angle (θt) Oscillating angle (ψ)	90	120	180	240	300	360
120						○
90					○	○
60			○	○	○	○
45			○	○	○	○
30			○	○	○	○

Index	RG I S 250
Oscillator	RGOS 250
Reducer	RGCS 250

● Dimensions with options

With worm reducer (with HO135-C/B)

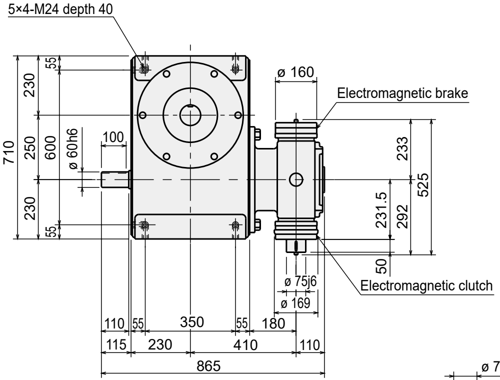

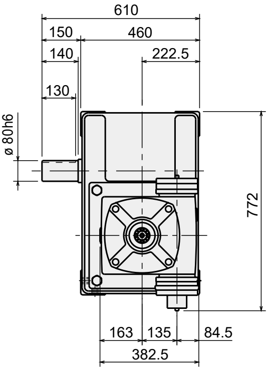

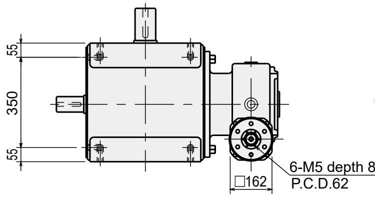

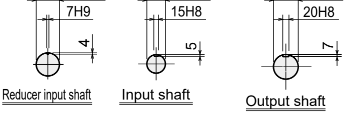

RG I S 250-☐☐☐S☐-NWN13☐YG
RGOS 250
RGCS 250

With worm reducer (without HO135-C/B)

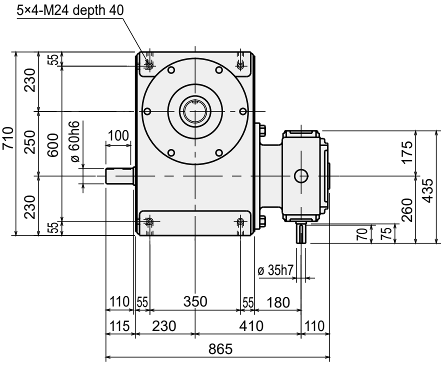

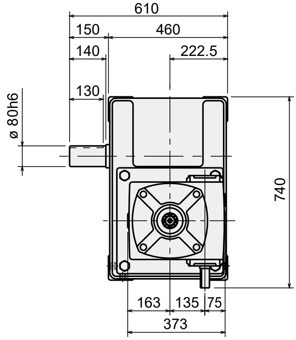

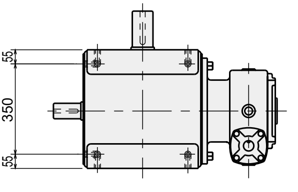

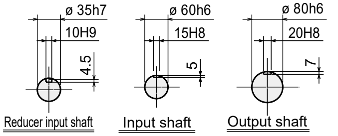

RG I S 250-☐☐☐S☐-NWN13☐NG
RGOS 250
RGCS 250

With the hollow shaft geared motor (5.5 kW)

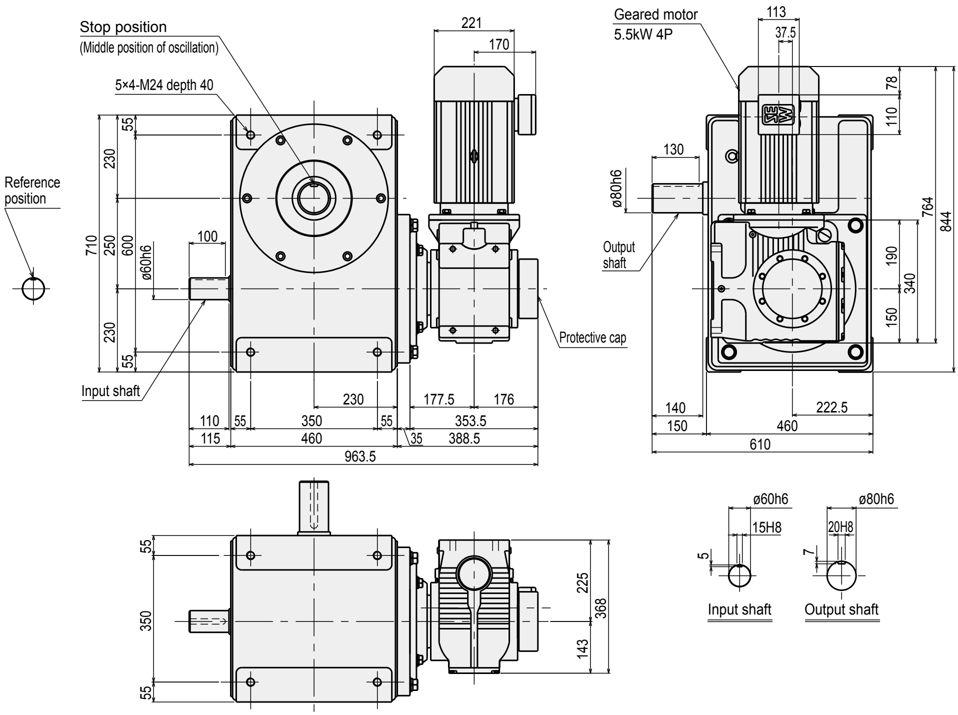

RG I S 250-☐☐☐☐S☐-NHNWPS☐F
RGOS 250
RGCS 250

Dimensions with options

With the hollow shaft geared motor (7.5 kW)

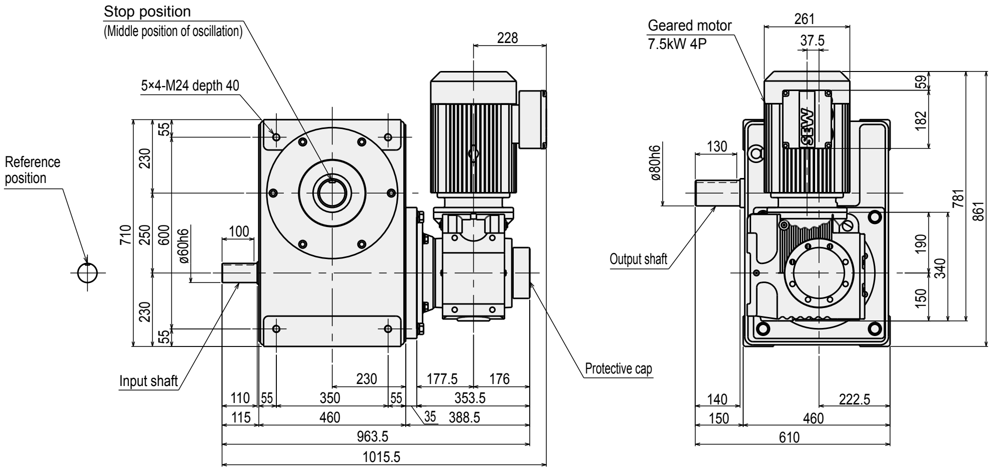

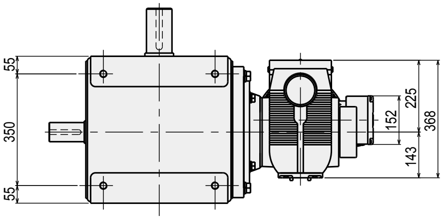

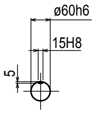

Input shaft

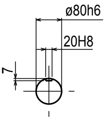

Output shaft

RG I S 250-☐☐☐☐☐☐☐☐S☐-NHNWQS☐F
RGOS 250
RGCS 250

● MEMO

Standard

Index	RG I S 250
Oscillator	RGOS 250
Reducer	RGCS 250

● Standard specifications

Dimensions

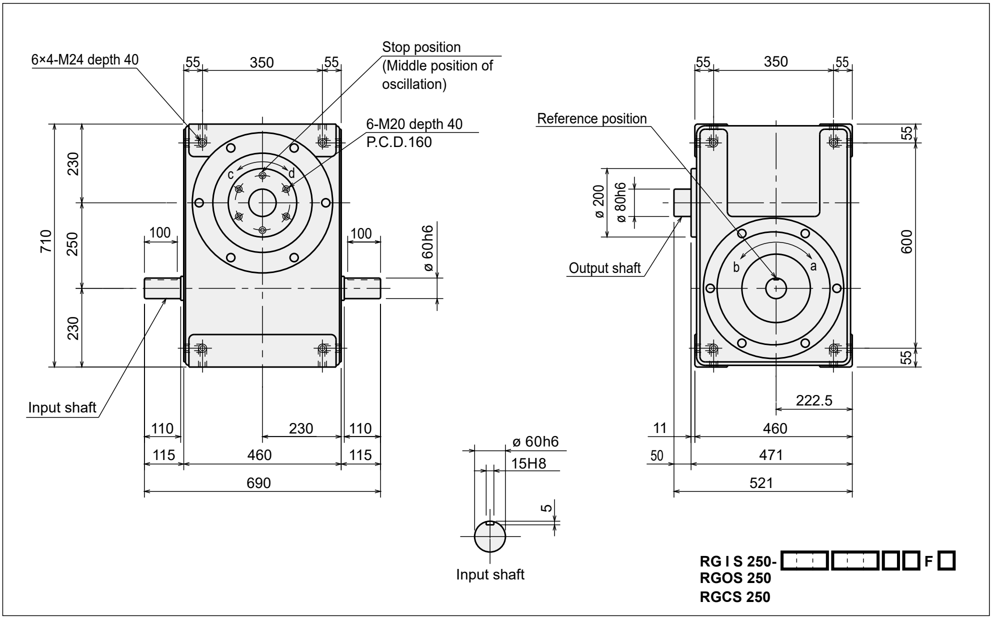

Installation position and oil supply/drain port and oil level gauge positions

Installation position	1	2	3
Series	**RGIS/RGOS/RGCS**	**RGIS/RGOS/RGCS**	**RGIS/RGOS/RGCS**
Dimensions	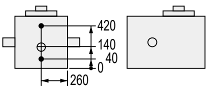	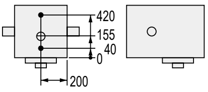	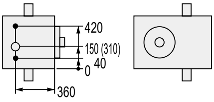 The dimensions in ( ) are for RGOS.

- ● Oil fill/drain port ($\mathrm{Rc}^{1}/_{2}$)
- ○ Oil level gauge (ø 30)

Installation position	4	5	6	
Series	**RGIS/RGOS/RGCS**	**RGIS/RGOS/RGCS**	**RGIS/RGCS**	**RGOS**
Dimensions	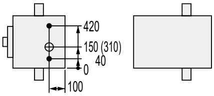 The dimensions in ( ) are for RGOS.	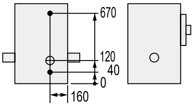	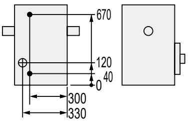	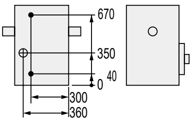

Characteristics

Descriptions	Unit	Characteristics	
		Output shaft	Input shaft
Allowable thrust force	N	26000	12000
Allowable radial force	N	32000	14000
Allowable bending moment	N·m	3000	-
Moment of inertia	$kg{\cdot}m^2$	0.69	0.96

Descriptions	Unit	Characteristics
Internal frictional torque (Tin)	N·m	76
Product weight	kg	650
Oil level	ℓ	38
Paint color		Silver

Accuracy

Index accuracy (sec.)		
Indexing accuracy	1 dwell	±30
	2 dwell	±60
	3 dwell	±90
	4 dwell	±120
Repeatability		15

Oscillating accuracy (sec.)	
Indexing accuracy	±60
Repeatability	15

* For the dwell accuracy, please contact CKD.

List of index angles

Index series **RGIS 250** Cam curve/MS

	Total index angle (θt) / Index number (n)	90	120	150	180	210	240	270	300	330
1 dwell	2							○	○	○
	3				○	○	○	○	○	○
	4			○	○	○	○	○	○	○
	5		○	○	○	○	○	○	○	○
	6	○	○	○	○	○	○	○	○	○
	8	○	○	○	○	○	○	○	○	○
	9	○	○	○	○	○	○	○	○	○
	10	○	○	○	○	○	○	○	○	○
	12	○	○	○	○	○	○	○	○	○
	15	○	○	○	○	○	○	○	○	○
	16	○	○	○	○	○	○	○	○	○
2 dwell	16		○	○	○	○	○	○	○	○
	18		○	○	○	○	○	○	○	○
	20	○	○	○	○	○	○	○	○	○
	24	○	○	○	○	○	○	○	○	○
	30	○	○	○	○	○	○	○	○	○
	32	○	○	○	○	○	○	○	○	○
3 dwell	24			○	○	○	○	○	○	○
	30		○	○	○	○	○	○	○	○
	36	○	○	○	○	○	○	○	○	○
	48	○	○	○	○	○	○	○	○	○
4 dwell	32				○	○	○	○	○	○
	36			○	○	○	○	○	○	○
	40			○	○	○	○	○	○	○
	48		○	○	○	○	○	○	○	○

Reducer series **RGCS 250**

Total index angle (θt) / Reduction ratio (id)	360
1/3	○
1/4	○
1/5	○
1/6	○
1/8	○
1/9	○
1/10	○
1/12	○

Oscillator Series **RGOS 250** Cam curve/MS

Total index angle (θt) / Oscillating angle (ψ)	90	120	180	240	300	360
120						○
90					○	○
60			○	○	○	○
45			○	○	○	○
30			○	○	○	○

Index	RG I S 250
Oscillator	RGOS 250
Reducer	RGCS 250

● Dimensions with options

With worm reducer (with HO135-C/B)

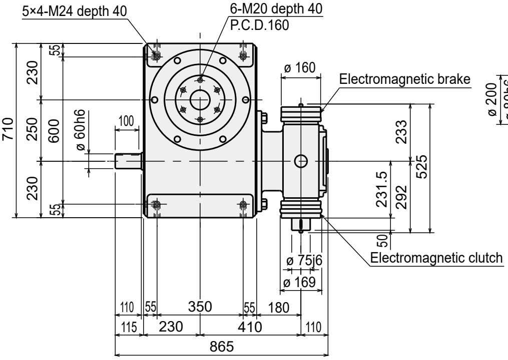

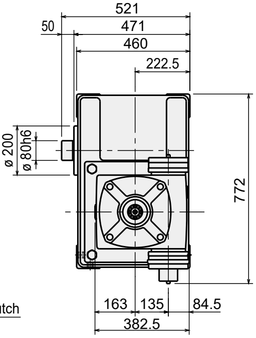

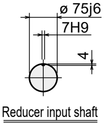

Reducer input shaft

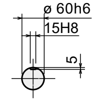

Input shaft

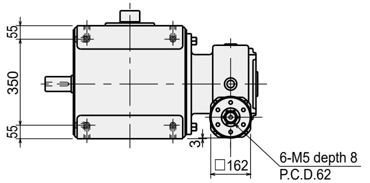

RG I S 250-☐☐☐☐☐☐☐☐F☐-NWN13☐YG
RGOS 250
RGCS 250

With worm reducer (without HO135-C/B)

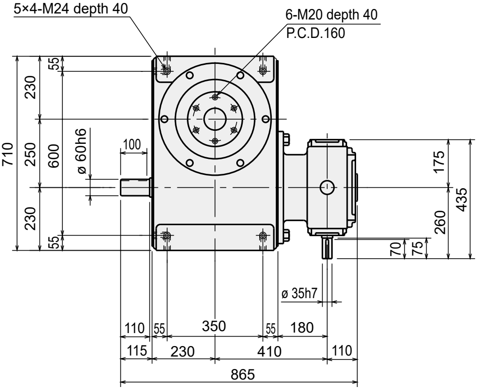

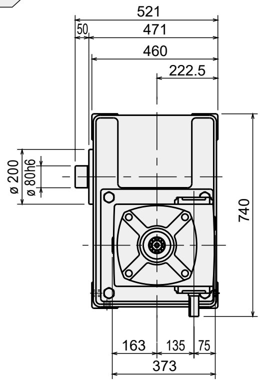

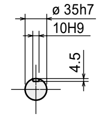

Reducer input shaft

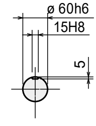

Input shaft

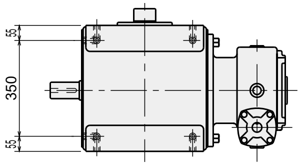

RG I S 250-☐☐☐☐☐☐☐☐F☐-NWN13☐NG
RGOS 250
RGCS 250

With the hollow shaft geared motor (5.5 kW)

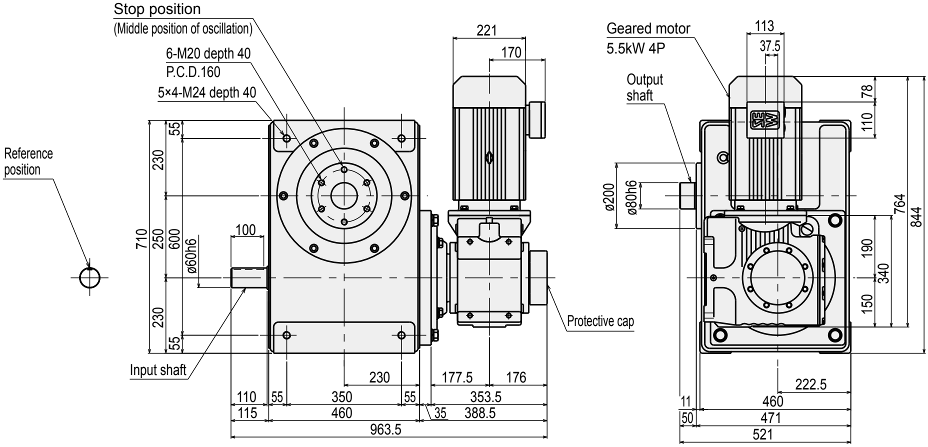

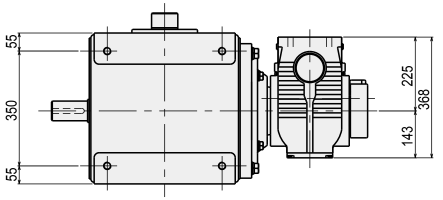

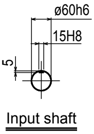

Input shaft

RG I S 250-☐☐☐☐☐☐☐☐F☐-NHNWPS☐F
RGOS 250
RGCS 250

● Dimensions with options

With the hollow shaft geared motor (7.5 kW)

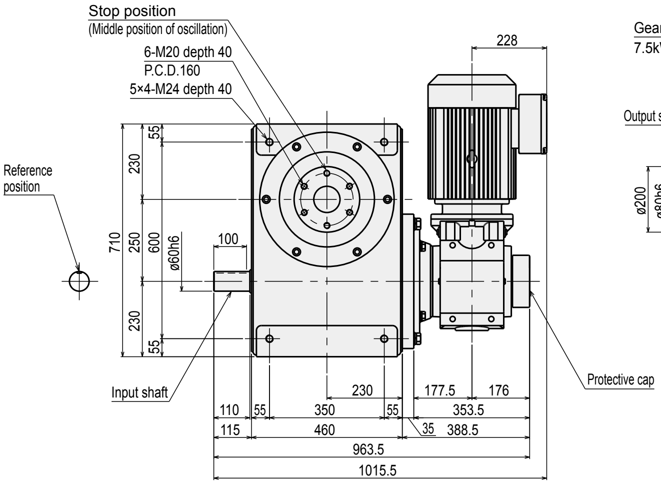

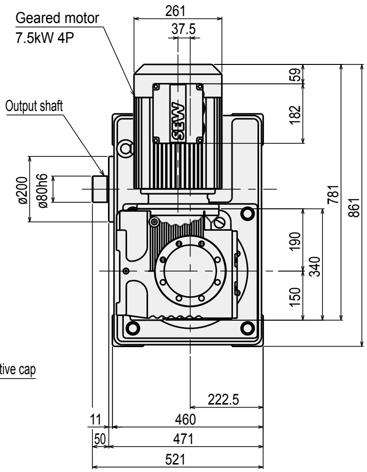

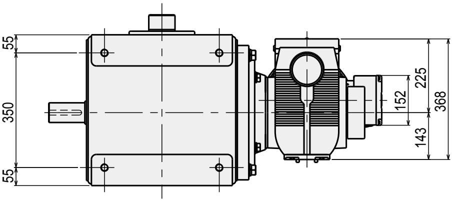

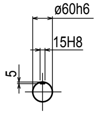

Input shaft

RG I S 250-☐☐☐☐☐☐☐☐F☐-NHNWQS☐F
RGOS 250
RGCS 250

● MEMO

Output torque table

● How to read a torque table

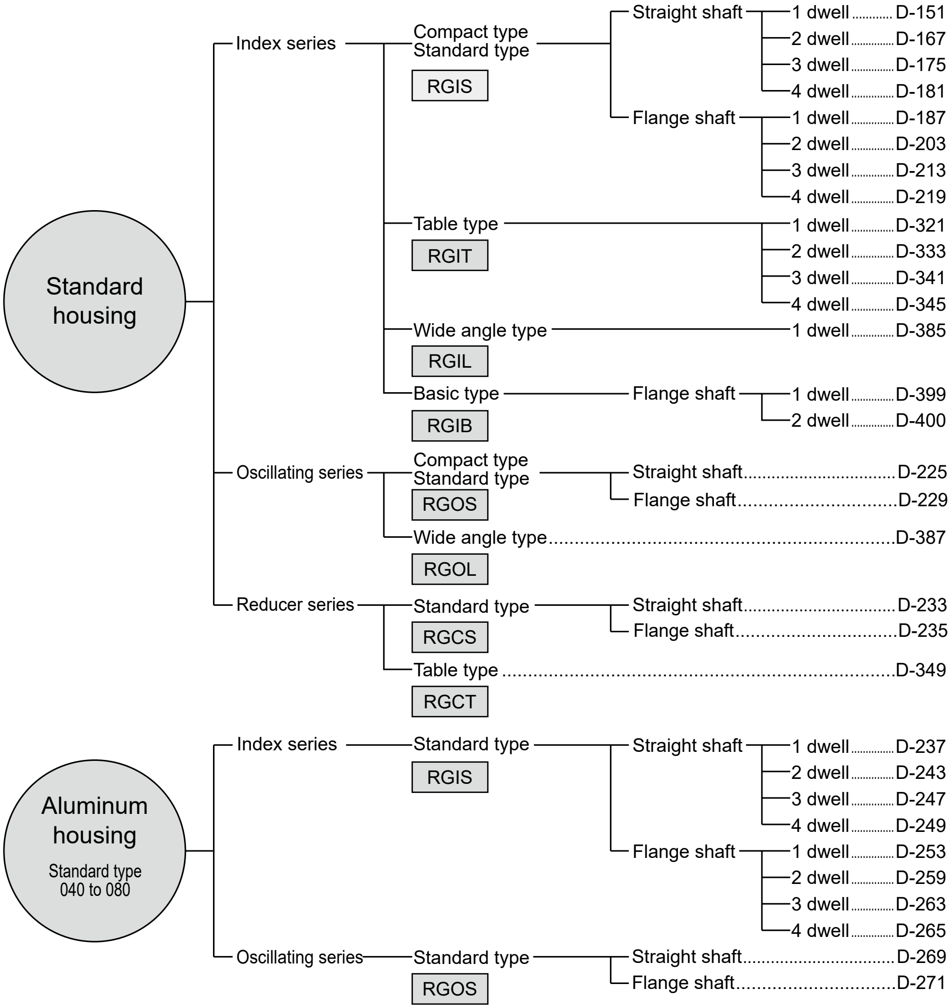

Page

- Standard housing
  - Index series
    - Compact type / Standard type **RGIS**
      - Straight shaft
        - 1 dwell D-151
        - 2 dwell D-167
        - 3 dwell D-175
        - 4 dwell D-181
      - Flange shaft
        - 1 dwell D-187
        - 2 dwell D-203
        - 3 dwell D-213
        - 4 dwell D-219
    - Table type **RGIT**
      - 1 dwell D-321
      - 2 dwell D-333
      - 3 dwell D-341
      - 4 dwell D-345
    - Wide angle type **RGIL**
      - 1 dwell D-385
    - Basic type **RGIB**
      - Flange shaft
        - 1 dwell D-399
        - 2 dwell D-400
  - Oscillating series
    - Compact type / Standard type **RGOS**
      - Straight shaft D-225
      - Flange shaft D-229
    - Wide angle type **RGOL** D-387
  - Reducer series
    - Standard type **RGCS**
      - Straight shaft D-233
      - Flange shaft D-235
    - Table type **RGCT** D-349
- Aluminum housing (Standard type 040 to 080)
  - Index series
    - Standard type **RGIS**
      - Straight shaft
        - 1 dwell D-237
        - 2 dwell D-243
        - 3 dwell D-247
        - 4 dwell D-249
      - Flange shaft
        - 1 dwell D-253
        - 2 dwell D-259
        - 3 dwell D-263
        - 4 dwell D-265
  - Oscillating series
    - Standard type **RGOS**
      - Straight shaft D-269
      - Flange shaft D-271

Caution

1. The output torque data is organized as in the table to the left.
2. The index angle is the total index angle of 1 rotation of the input shaft.
3. The data is based on the standard service life of 10,000 hours.

Index series

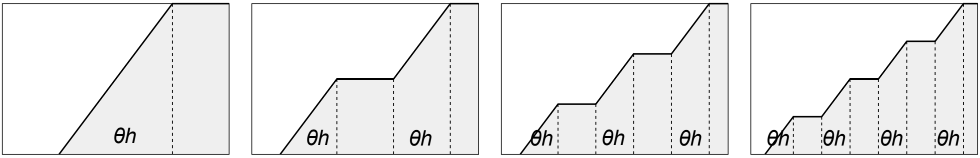

1 dwell 2 dwell 3 dwell 4 dwell

Oscillating series

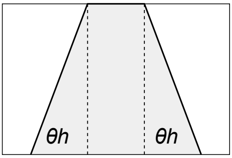

Reducer Sereis

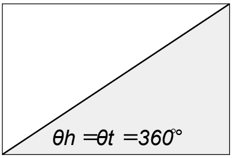

$\theta t = \theta h \times z$

θt : Total index angle

θh : Index angle

z : Dwell No.

How to read the output torque table

Cam curve/MS

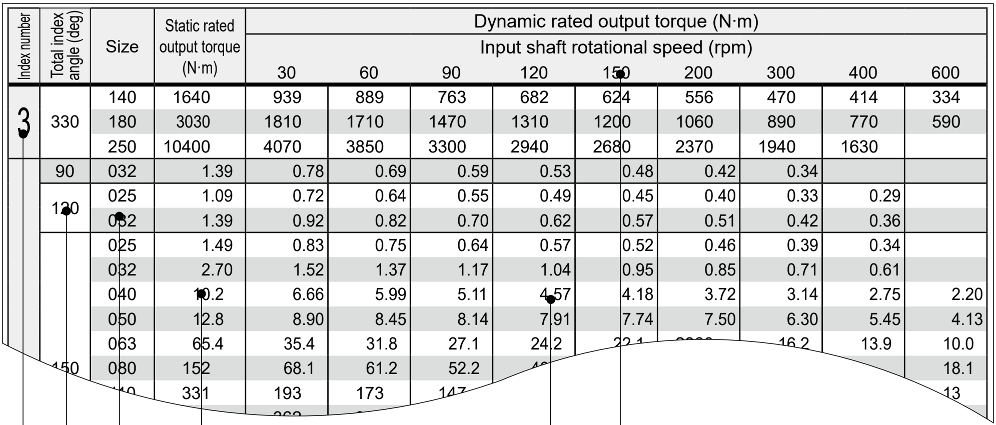

Index number	Total index angle (deg)	Size	Static rated output torque (N·m)	Dynamic rated output torque (N·m) Input shaft rotational speed (rpm) 30	60	90	120	150	200	300	400	600
3	330	140	1640	939	889	763	682	624	556	470	414	334
		180	3030	1810	1710	1470	1310	1200	1060	890	770	590
		250	10400	4070	3850	3300	2940	2680	2370	1940	1630	
	90	032	1.39	0.78	0.69	0.59	0.53	0.48	0.42	0.34		
	120	025	1.09	0.72	0.64	0.55	0.49	0.45	0.40	0.33	0.29	
		032	1.39	0.92	0.82	0.70	0.62	0.57	0.51	0.42	0.36	
	150	025	1.49	0.83	0.75	0.64	0.57	0.52	0.46	0.39	0.34	
		032	2.70	1.52	1.37	1.17	1.04	0.95	0.85	0.71	0.61	
		040	10.2	6.66	5.99	5.11	4.57	4.18	3.72	3.14	2.75	2.20
		050	12.8	8.90	8.45	8.14	7.91	7.74	7.50	6.30	5.45	4.13
		063	65.4	35.4	31.8	27.1	24.2	22.1		16.2	13.9	10.0
		080	152	68.1	61.2	52.2						18.1
			331	193	173	147						13

- Static rated output torque (N·m)
- Size: *C* which represents the shaft interval
- Total index angle *θt* (°)
- Index number *n*
- Input shaft rotational speed *N* (rpm)
- Dynamic rated output torque *Tr* (N·m)

Roller gear cam drive (standard housing)

Output torque table

Index series

● RGIS straight shaft (1 dwell)

Cam curve/MS

Index number	Total index angle (deg)	Size	Static rated output torque (N·m)	Rated dynamic output torque (N·m)								
				Input shaft rotational speed (rpm)								
				30	60	90	120	150	200	300	400	600
2	150	025	1.09	0.56	0.49	0.42	0.38	0.34	0.30	0.25		
		032	1.99	1.02	0.9	0.77	0.68	0.62	0.55			
	180	025	1.09	0.63	0.56	0.48	0.43	0.39	0.35	0.29	0.25	
		032	2.69	1.56	1.39	1.19	1.06	0.97	0.86	0.73		
	210	025	1.09	0.69	0.62	0.53	0.47	0.43	0.38	0.32	0.28	
		032	2.69	1.70	1.53	1.30	1.16	1.07	0.95	0.80	0.71	
	240	025	1.09	0.73	0.66	0.57	0.51	0.46	0.41	0.35	0.31	
		032	2.69	1.81	1.64	1.40	1.25	1.15	1.02	0.87	0.77	
	270	025	1.09	0.76	0.70	0.60	0.53	0.49	0.44	0.37	0.33	
		032	2.69	1.89	1.74	1.48	1.33	1.21	1.08	0.92	0.82	
		040	10.9	6.64	6.45	6.21	6.05	5.93	5.77	4.92	4.37	3.63
		050	19.9	12.3	12.0	11.5	11.2	11.0	10.7	10.2	9.4	7.7
		063	85.1	44.2	40.6	34.6	30.9	28.3	25.2	21.2	18.6	14.7
		080	164	100	97	89	80	73	65	55	48	38
		110	359	220	211	180	161	147	130	109	94	
		140	950	444	407	347	309	282	248	203	168	
		180	2860	1110	1020	870	770	700	610	490		
		250	5840	2620	2400	2040	1800	1620	1400			
	300	025	2.13	1.19	1.10	0.94	0.84	0.77	0.69	0.58	0.52	
		032	4.77	2.69	2.49	2.13	1.90	1.74	1.55	1.32	1.17	
		040	30.6	16.1	14.9	12.7	11.4	10.4	9.3	7.9	7.1	5.9
		050	50.1	28.1	26.1	22.3	19.9	18.2	16.3	13.8	12.2	10.1
		063	85.1	47.0	43.6	37.2	33.3	30.4	27.1	22.9	20.2	16.3
		080	242	140	130	111	99	91	81	68	60	49
		110	591	286	265	226	202	184	164	138	120	93
		140	1160	598	555	473	422	385	342	284	242	
		180	3030	1430	1330	1130	1010	920	810	660		
		250	10400	3260	3010	2560	2270	2060	1790			
	330	025	2.13	1.25	1.17	1.00	0.90	0.82	0.73	0.62	0.55	
		032	4.77	2.83	2.65	2.26	2.02	1.85	1.65	1.41	1.25	
		040	30.6	17.0	15.9	13.5	12.1	11.1	9.9	8.4	7.5	6.3
		050	50.1	29.6	27.7	23.6	21.1	19.4	17.3	14.7	13.0	10.9
		063	119	56.6	52.9	45.2	40.3	36.9	33.0	27.9	24.7	20.3
		080	242	148	138	118	105	96	86	73	65	53
		110	591	301	281	240	214	196	175	147	129	102
		140	1160	631	590	503	449	411	365	305	263	
		180	3030	1510	1410	1210	1070	980	870	710	600	
		250	10400	3430	3200	2720	2420	2200	1920	1530		
3	120	025	1.09	0.62	0.55	0.47	0.42	0.38	0.34	0.28	0.24	
		032	2.69	1.54	1.37	1.16	1.04	0.95	0.84	0.70		
	150	025	1.09	0.71	0.63	0.54	0.48	0.44	0.39	0.33	0.29	
		032	2.69	1.75	1.56	1.33	1.19	1.09	0.97	0.82	0.71	
	180	025	1.09	0.76	0.69	0.59	0.52	0.48	0.43	0.36	0.32	
		032	2.69	1.89	1.71	1.46	1.30	1.19	1.06	0.90	0.79	
		040	10.9	6.64	6.33	6.10	5.94	5.81	5.65	4.81	4.25	3.48
		050	19.9	12.3	11.7	11.3	11.0	10.8	10.4	9.9	9.1	7.2
		063	85.1	44.2	39.8	34.0	30.3	27.7	24.6	20.6	17.8	13.5
		080	164	100	96	87	78	71	63	53	46	36
		110	359	220	207	177	157	144	127	105	88	
		140	950	444	400	340	302	275	241	192	152	
		180	2860	1110	1000	850	750	680	590	450		
		250	5840	2620	2350	1990	1750	1560	1310			

● RGIS straight shaft (1 dwell)

Cam curve/MS

Index number	Total index angle (deg)	Size	Static rated output torque (N·m)	Rated dynamic output torque (N·m)								
				Input shaft rotational speed (rpm)								
				30	60	90	120	150	200	300	400	600
3	210	025	2.13	1.22	1.12	0.95	0.85	0.78	0.70	0.59	0.52	
		032	4.77	2.76	2.53	2.16	1.93	1.76	1.57	1.33	1.18	
		040	10.9	7.27	7.03	6.77	6.60	6.46	6.29	5.37	4.76	3.96
		050	50.1	28.9	26.4	22.5	20.1	18.4	16.4	13.9	12.3	10.1
		063	85.1	48.3	44.2	37.7	33.7	30.8	27.4	23.1	20.2	16.0
		080	242	144	132	112	100	92	82	69	61	49
		110	591	293	268	229	204	187	166	138	119	89
		140	1160	615	562	479	427	390	344	283	238	
		180	2860	1220	1110	950	840	760	670	530		
		250	5840	2870	2620	2220	1960	1770	1520			
	240	025	2.13	1.31	1.22	1.04	0.93	0.85	0.76	0.64	0.57	
		032	4.77	2.97	2.75	2.34	2.09	1.92	1.71	1.45	1.29	
		040	30.6	17.7	16.4	14.0	12.5	11.5	10.2	8.7	7.8	6.5
		050	50.1	30.9	28.6	24.4	21.8	20.0	17.8	15.2	13.4	11.1
		063	85.1	51.8	48.0	40.9	36.6	33.5	29.8	25.2	22.2	18.0
		080	242	154	143	122	109	100	89	75	66	54
		110	591	314	291	248	222	203	180	152	132	103
		140	1160	660	611	521	465	424	376	313	268	
		180	3030	1580	1460	1250	1110	1010	890	730	610	
		250	10400	3580	3310	2810	2490	2260	1970	1530		
	270	025	2.13	1.39	1.30	1.11	0.99	0.91	0.81	0.69	0.61	
		032	7.41	4.87	4.56	3.89	3.48	3.19	2.85	2.42	2.16	
		040	41.6	26.1	24.4	20.8	18.6	17.1	15.3	13.0	11.6	9.8
		050	50.1	32.6	30.5	26.0	23.3	21.3	19.0	16.2	14.4	12.0
		063	85.1	54.7	51.1	43.7	39.0	35.7	31.9	27.0	23.9	19.6
		080	242	163	152	130	116	106	95	81	71	59
		110	591	332	310	265	236	216	193	163	143	114
		140	1160	697	652	556	496	454	403	338	293	224
		180	3030	1670	1560	1330	1190	1080	960	790	670	
		250	10400	3770	3530	3000	2670	2430	2130	1700		
	300	025	2.89	1.97	1.86	1.59	1.42	1.30	1.16	0.99	0.88	
		032	7.41	5.09	4.81	4.11	3.67	3.36	3.00	2.56	2.28	
		040	41.6	27.2	25.7	22.0	19.6	18.0	16.1	13.7	12.2	10.4
		050	67.0	45.2	42.7	36.4	32.6	29.8	26.7	22.7	20.2	17.0
		063	119	65.0	61.4	52.4	46.9	42.9	38.3	32.5	28.9	24.0
		080	262	207	204	174	156	143	127	108	96	80
		110	738	451	426	364	325	298	265	225	199	163
		140	1640	907	857	731	653	597	532	448	393	312
		180	3030	1740	1650	1400	1250	1140	1020	850	730	
		250	10400	3930	3710	3160	2810	2560	2260	1830	1510	
	330	025	2.89	2.04	1.93	1.66	1.48	1.36	1.21	1.04	0.92	
		032	7.41	5.27	4.99	4.29	3.83	3.51	3.14	2.68	2.38	
		040	41.6	28.2	26.7	22.9	20.5	18.8	16.8	14.3	12.8	10.8
		050	67.0	46.7	44.2	38.0	33.9	31.1	27.8	23.7	21.1	17.8
		063	129	106	106	97	87	80	71	61	54	45
		080	262	214	212	182	162	149	133	113	101	85
		110	738	467	442	379	339	310	277	235	208	172
		140	1640	939	889	763	682	624	556	470	414	334
		180	3030	1810	1710	1470	1310	1200	1060	890	770	590
		250	10400	4070	3850	3300	2940	2680	2370	1940	1630	

Output torque table

● RGIS straight shaft (1 dwell)

Cam curve/MS

Index number	Total index angle (deg)	Size	Static rated output torque (N·m)	Rated dynamic output torque (N·m)								
				Input shaft rotational speed (rpm)								
				30	60	90	120	150	200	300	400	600
4	90	032	1.39	0.78	0.69	0.59	0.53	0.48	0.42	0.34		
	120	025	1.09	0.72	0.64	0.55	0.49	0.45	0.40	0.33	0.29	
		032	1.39	0.92	0.82	0.70	0.62	0.57	0.51	0.42	0.36	
	150	025	1.49	0.83	0.75	0.64	0.57	0.52	0.46	0.39	0.34	
		032	2.70	1.52	1.37	1.17	1.04	0.95	0.85	0.71	0.61	
		040	10.2	6.66	5.99	5.11	4.57	4.18	3.72	3.14	2.75	2.20
		050	12.8	8.90	8.45	8.14	7.91	7.74	7.50	6.30	5.45	4.13
		063	63.6	35.4	31.8	27.1	24.2	22.1	19.5	16.2	13.8	9.9
		080	108	59.7	53.6	45.7	40.7	37.2	32.9	27.0	22.7	15.4
		110	331	193	173	147	131	119	105	85	70	43
		140	760	362	325	276	245	222	193	150	113	
		180	1490	769	689	583	514	462	393	280		
		250	4150	2000	1780	1500	1310	1160	950			
	180	025	1.49	0.92	0.84	0.72	0.64	0.59	0.52	0.44	0.39	
		032	2.70	1.68	1.54	1.31	1.17	1.07	0.95	0.81	0.71	
		040	10.9	7.79	7.53	7.25	7.07	6.92	6.73	5.75	5.10	4.24
		050	19.9	14.4	13.9	13.4	13.1	12.8	12.4	11.9	11.0	8.9
		063	63.6	38.9	35.6	30.4	27.1	24.8	22.0	18.5	16.0	12.4
		080	152	75.0	68.6	58.5	52.2	47.7	42.4	35.4	30.6	23.2
		110	359	258	246	210	187	171	152	127	109	80
		140	950	522	477	406	361	329	290	237	196	
		180	2100	1060	960	820	730	660	580	450	350	
		250	4150	2200	2000	1690	1490	1340	1130	800		
	210	025	2.13	1.41	1.31	1.12	1.00	0.91	0.82	0.69	0.62	
		032	4.77	3.18	2.95	2.52	2.25	2.06	1.84	1.56	1.39	
		040	17.9	13.9	13.6	13.1	12.8	12.3	11.0	9.4	8.3	7.0
		050	19.9	15.4	15.1	14.6	14.2	13.9	13.5	12.9	12.0	9.9
		063	63.6	41.7	38.7	33.0	29.4	27.0	24.0	20.3	17.8	14.2
		080	164	126	124	113	101	92	82	70	62	50
		110	359	277	268	228	204	186	166	139	121	94
		140	950	560	519	442	394	360	319	264	224	159
		180	2100	1130	1050	890	790	720	640	510	420	
		250	4150	2350	2170	1840	1630	1470	1270	960		
	240	025	2.13	1.49	1.40	1.19	1.07	0.98	0.87	0.74	0.66	
		032	4.77	3.35	3.15	2.69	2.40	2.20	1.96	1.67	1.48	
		040	17.9	14.6	14.5	14.0	13.6	13.1	11.7	10.0	8.9	7.5
		050	19.9	16.2	16.1	15.5	15.1	14.8	14.4	13.8	12.8	10.7
		063	63.6	43.9	41.1	35.1	31.4	28.7	25.6	21.7	19.1	15.6
		080	164	133	132	120	108	99	88	75	66	55
		110	359	291	285	243	217	199	177	149	131	105
		140	950	589	553	471	420	384	341	285	246	185
		180	2100	1190	1120	950	850	770	680	560	470	310
		250	5840	3450	3230	2750	2440	2220	1950	1560	1240	
	270	025	2.13	1.55	1.47	1.25	1.12	1.03	0.92	0.78	0.70	
		032	4.77	3.49	3.30	2.82	2.52	2.31	2.06	1.76	1.56	
		040	17.9	15.1	15.1	14.6	14.2	13.8	12.3	10.5	9.3	7.9
		050	19.9	16.8	16.8	16.2	15.8	15.5	15.1	14.5	13.5	11.3
		063	63.6	45.5	43.1	36.8	32.9	30.2	26.9	22.8	20.2	16.7
		080	164	138	138	126	113	103	92	78	70	58
		110	591	367	348	297	265	243	217	183	162	132
		140	1160	775	733	626	559	512	456	384	335	265
		180	2860	1530	1450	1240	1100	1010	900	740	640	470
		250	5840	3580	3390	2890	2570	2340	2060	1680	1380	

● RGIS straight shaft (1 dwell)

Cam curve/MS

Index number	Total index angle (deg)	Size	Static rated output torque (N·m)	Rated dynamic output torque (N·m)								
				Input shaft rotational speed (rpm)								
				30	60	90	120	150	200	300	400	600
4	300	025	2.13	1.60	1.51	1.31	1.17	1.07	0.96	0.81	0.73	
		032	4.77	3.59	3.40	2.94	2.63	2.41	2.15	1.83	1.63	
		040	30.6	21.3	20.2	17.4	15.6	14.3	12.8	10.9	9.7	8.2
		050	50.1	37.1	35.1	30.3	27.1	24.8	22.2	18.9	16.8	14.2
		063	85.1	62.3	59.0	50.9	45.5	41.7	37.2	31.7	28.1	23.5
		080	164	142	142	131	117	108	96	82	73	61
		110	591	378	358	309	276	253	225	191	169	139
		140	1160	798	755	652	582	533	475	401	352	283
		180	2860	1580	1490	1290	1150	1050	930	780	680	510
		250	5840	3680	3480	3000	2670	2440	2160	1770	1490	
	330	025	2.13	1.64	1.55	1.35	1.21	1.11	0.99	0.84	0.75	
		032	4.77	3.68	3.48	3.03	2.71	2.48	2.22	1.89	1.69	
		040	30.6	21.8	20.7	18.0	16.1	14.7	13.2	11.2	10.0	8.5
		050	50.1	37.9	35.9	31.2	27.9	25.6	22.8	19.5	17.4	14.7
		063	85.1	63.8	60.4	52.5	47.0	43.0	38.4	32.7	29.1	24.4
		080	164	145	145	135	121	111	99	84	75	63
		110	591	386	366	318	284	261	233	197	175	145
		140	1160	817	773	673	601	550	490	415	366	298
		180	2860	1620	1530	1330	1190	1090	970	810	710	550
		250	5840	3760	3560	3100	2760	2520	2230	1850	1570	1120
5	120	040	7.19	4.92	4.38	3.74	3.33	3.05	2.71	2.27	1.96	1.49
		050	13.1	8.32	7.40	6.30	5.61	5.12	4.52	3.70	3.09	2.01
		063	16.4	11.2	10.5	10.1	9.8	9.5	9.1	7.3	5.8	2.9
		080	80.0	45.0	40.0	34.0	30.3	27.5	24.2	19.4	15.6	8.3
		110	200	94.1	83.6	71.0	62.8	56.8	49.1	37.3	26.7	
		140	420	245	217	184	162	146	124	89	55	
		180	976	465	411	345	299	263	211	112		
		250	2870	1330	1170	970	830	710	530			
	150	032	1.89	1.20	1.09	0.93	0.83	0.76	0.67	0.56	0.49	
		040	7.19	5.45	4.95	4.23	3.77	3.45	3.08	2.60	2.28	1.83
		050	12.8	9.87	9.46	9.11	8.87	8.68	8.42	7.12	6.21	4.88
		063	25.3	18.5	17.8	17.1	16.6	16.2	15.7	14.8	13.3	9.9
		080	108	67.1	60.9	51.9	46.3	42.3	37.5	31.2	26.7	19.4
		110	225	165	158	145	129	117	104	85	71	47
		140	462	335	317	270	240	218	191	151	118	54
		180	976	524	474	400	352	316	267	184		
		250	2870	1490	1350	1130	990	870	710	420		
	180	032	2.70	1.86	1.71	1.46	1.31	1.20	1.07	0.90	0.79	
		040	10.2	7.93	7.32	6.25	5.58	5.11	4.56	3.87	3.43	2.85
		050	12.8	10.5	10.3	9.9	9.6	9.4	9.2	7.8	6.9	5.6
		063	25.3	20.0	19.5	18.8	18.3	17.9	17.3	16.5	15.1	11.8
		080	108	72.4	66.8	57.0	50.9	46.6	41.4	34.8	30.3	23.5
		110	225	178	174	159	142	129	115	96	82	61
		140	462	362	349	297	265	241	213	174	144	90
		180	1220	739	681	579	513	465	405	315	237	
		250	3910	1990	1830	1550	1370	1230	1050	760	480	
	210	032	2.70	1.96	1.84	1.57	1.40	1.28	1.14	0.97	0.86	
		040	14.8	8.30	7.77	6.63	5.93	5.43	4.85	4.12	3.66	3.07
		050	12.8	11.0	10.9	10.5	10.2	10.0	9.7	8.3	7.3	6.1
		063	63.6	45.2	42.3	36.1	32.2	29.5	26.3	22.3	19.6	15.9
		080	152	87.1	81.5	69.6	62.1	56.9	50.7	42.8	37.6	30.3
		110	331	246	230	196	175	160	143	120	104	82
		140	462	382	374	318	284	259	230	190	161	114
		180	1490	987	923	786	699	637	561	455	373	223
		250	4150	2540	2370	2020	1790	1620	1410	1100	830	

Roller gear cam drive (standard housing)

Output torque table

Index series

● RGIS straight shaft (1 dwell)

Cam curve/MS

Index number	Total index angle (deg)	Size	Static rated output torque (N·m)	Rated dynamic output torque (N·m)								
				Input shaft rotational speed (rpm)								
				30	60	90	120	150	200	300	400	600
5	240	025	1.49	1.12	1.06	0.90	0.81	0.74	0.66	0.56	0.50	
		032	2.70	2.04	1.93	1.65	1.47	1.35	1.20	1.02	0.91	
		040	10.9	9.39	9.39	9.06	8.83	8.65	8.43	7.21	6.43	5.43
		050	37.9	26.6	25.1	21.5	19.2	17.6	15.7	13.4	11.9	9.9
		063	63.6	46.9	44.4	37.9	33.9	31.0	27.7	23.5	20.8	17.1
		080	152	90.4	85.6	73.1	65.3	59.8	53.3	45.2	39.9	32.7
		110	331	255	241	206	184	168	150	127	111	89
		140	760	483	457	391	348	319	283	237	205	155
		180	1490	1030	970	830	740	670	590	490	410	280
		250	4150	2640	2490	2120	1890	1720	1500	1200	960	
	270	025	1.49	1.15	1.09	0.94	0.84	0.77	0.69	0.59	0.52	
		032	3.66	2.84	2.69	2.32	2.08	1.90	1.70	1.45	1.29	
		040	10.9	9.65	9.65	9.41	9.17	8.99	8.75	7.50	6.69	5.67
		050	37.9	27.3	25.8	22.3	19.9	18.3	16.3	13.9	12.4	10.4
		063	63.6	48.2	45.6	39.4	35.2	32.2	28.8	24.4	21.7	18.0
		080	152	92.9	88.0	76.0	67.9	62.2	55.5	47.1	41.7	34.5
		110	359	319	315	272	243	223	199	168	149	122
		140	760	497	471	406	362	332	295	248	216	169
		180	1490	1050	1000	860	770	700	620	520	440	320
		250	4150	2710	2560	2200	1960	1790	1580	1280	1050	640
	300	025	1.49	1.18	1.11	0.97	0.87	0.80	0.71	0.61	0.54	
		032	3.66	2.90	2.75	2.40	2.14	1.96	1.75	1.49	1.33	
		040	10.9	9.85	9.85	9.70	9.45	9.26	9.02	7.73	6.90	5.85
		050	37.9	27.8	26.3	23.0	20.5	18.8	16.8	14.3	12.8	10.8
		063	63.6	49.2	46.5	40.6	36.2	33.2	29.6	25.2	22.4	18.7
		080	152	94.9	89.8	78.3	69.9	64.1	57.2	48.6	43.1	35.9
		110	359	326	322	281	251	230	205	174	154	128
		140	760	508	481	419	374	342	305	257	225	180
		180	1490	1080	1020	890	790	720	640	540	460	350
		250	4150	2760	2610	2270	2020	1850	1630	1340	1120	750
	330	025	1.49	1.20	1.13	1.00	0.89	0.82	0.73	0.62	0.55	
		032	3.66	2.95	2.79	2.46	2.20	2.01	1.80	1.53	1.37	
		040	10.9	10.0	10.0	9.9	9.7	9.5	9.2	7.9	7.1	6.0
		050	37.9	28.3	26.7	23.5	21.0	19.3	17.2	14.7	13.1	11.1
		063	63.6	49.9	47.3	41.6	37.1	34.0	30.4	25.9	23.0	19.3
		080	152	96.4	91.2	80.2	71.7	65.7	58.6	49.9	44.3	37.1
		110	359	331	327	287	257	235	210	179	158	132
		140	760	516	488	429	383	351	313	264	233	188
		180	1490	1090	1040	910	810	740	660	550	480	370
		250	4150	2800	2650	2330	2080	1900	1680	1390	1180	840
6	60	025	1.09	0.60	0.53	0.45	0.40	0.37	0.32	0.26	0.21	
		032	2.69	1.49	1.32	1.13	1.00	0.91	0.80	0.66		
	90	025	1.09	0.75	0.67	0.57	0.51	0.46	0.41	0.35	0.30	
		032	2.69	1.86	1.65	1.41	1.26	1.15	1.02	0.86	0.75	
		040	10.9	6.53	6.13	5.91	5.75	5.62	5.45	4.61	4.01	3.13
		050	19.9	12.1	11.4	10.9	10.6	10.4	10.0	9.4	8.4	6.1
		063	85.1	43.4	38.6	32.9	29.3	26.7	23.5	19.2	16.0	10.2
		080	164	98.7	92.6	84.6	75.4	68.8	60.8	50.0	41.9	28.0
		110	591	264	234	199	177	161	141	111	87	
		140	950	436	386	327	289	261	223	163	107	
		180	2860	1090	970	810	710	640	530	350		
		250	5840	2570	2270	1890	1630	1420	1100			

● RGIS straight shaft (1 dwell)

Cam curve/MS

Index number	Total index angle (deg)	Size	Static rated output torque (N·m)	Rated dynamic output torque (N·m) Input shaft rotational speed (rpm) 30	60	90	120	150	200	300	400	600
6	120	025	2.89	1.78	1.60	1.36	1.22	1.11	0.99	0.84	0.74	
		032	7.41	4.61	4.14	3.53	3.16	2.89	2.58	2.18	1.92	
		040	41.6	24.7	22.2	18.9	16.9	15.5	13.8	11.8	10.4	8.7
		050	67.0	41.1	36.9	31.5	28.1	25.8	23.0	19.4	17.1	13.9
		063	119	59.1	53.0	45.2	40.4	36.9	32.8	27.5	23.9	18.3
		080	262	188	176	150	134	123	109	92	80	63
		110	738	410	368	314	280	255	226	188	160	115
		140	1640	822	737	628	559	509	449	366	301	
		180	4270	2210	1980	1680	1500	1360	1190	930	730	
		250	10400	3580	3200	2700	2380	2130	1800	1240		
	150	025	3.76	2.56	2.35	2.00	1.79	1.64	1.46	1.25	1.11	
		032	7.41	5.09	4.66	3.98	3.56	3.26	2.91	2.47	2.19	
		040	41.6	27.2	24.9	21.3	19.0	17.4	15.6	13.3	11.8	9.9
		050	67.0	45.2	41.4	35.3	31.5	28.9	25.8	21.9	19.4	16.1
		063	129	102	99	90	81	74	66	56	49	41
		080	262	207	198	169	151	138	123	104	92	75
		110	738	451	413	352	315	288	256	215	187	146
		140	1640	907	830	708	631	577	511	425	364	265
		180	4270	2440	2230	1900	1690	1540	1360	1110	920	
		250	10400	3930	3590	3050	2700	2450	2120	1620	1180	
	180	025	3.76	2.73	2.55	2.17	1.94	1.78	1.59	1.35	1.21	
		032	7.41	5.42	5.05	4.31	3.85	3.53	3.15	2.68	2.39	
		040	41.6	28.9	26.9	23.0	20.6	18.8	16.8	14.3	12.8	10.8
		050	67.0	47.9	44.6	38.1	34.0	31.2	27.9	23.7	21.1	17.7
		063	129	109	107	98	87	80	71	61	54	45
		080	431	268	249	213	190	174	155	132	117	97
		110	903	606	564	482	430	394	351	297	262	212
		140	2230	1190	1110	950	850	770	690	580	500	390
		180	4270	2590	2410	2060	1830	1680	1490	1230	1050	760
		250	10400	4180	3880	3300	2930	2670	2340	1870	1480	
	210	025	3.76	2.86	2.70	2.30	2.06	1.88	1.68	1.44	1.28	
		032	7.41	5.66	5.34	4.56	4.08	3.74	3.34	2.84	2.53	
		040	41.6	30.1	28.5	24.3	21.7	19.9	17.8	15.2	13.5	11.5
		050	67.0	49.9	47.1	40.2	35.9	32.9	29.4	25.1	22.3	18.8
		063	129	113	113	103	92	84	75	64	57	48
		080	431	279	263	225	201	184	164	140	124	104
		110	903	631	596	508	454	416	371	315	279	230
		140	2230	1240	1170	1000	890	820	730	620	540	440
		180	4270	2700	2550	2180	1940	1780	1580	1320	1150	880
		250	10400	4340	4100	3490	3110	2830	2500	2040	1680	
	240	025	3.76	2.94	2.79	2.40	2.15	1.97	1.76	1.50	1.34	
		032	7.41	5.83	5.52	4.75	4.25	3.89	3.48	2.97	2.64	
		040	41.6	31.0	29.4	25.3	22.6	20.7	18.5	15.8	14.1	12.0
		050	67.0	51.3	48.5	41.8	37.4	34.3	30.6	26.1	23.3	19.7
		063	129	116	116	107	96	88	79	67	60	50
		080	431	287	271	234	209	192	171	146	130	109
		110	903	649	614	529	473	433	387	329	292	243
		140	2230	1280	1210	1040	930	850	760	650	570	470
		180	4270	2780	2630	2270	2020	1850	1650	1390	1210	960
		250	10400	4470	4230	3630	3240	2960	2620	2160	1830	1270

Roller gear cam drive (standard housing)

Output torque table

Index series

● RGIS straight shaft (1 dwell)

Cam curve/MS

Index number	Total index angle (deg)	Size	Static rated output torque (N·m)	Rated dynamic output torque (N·m)								
				Input shaft rotational speed (rpm)								
				30	60	90	120	150	200	300	400	600
6	270	025	3.76	3.01	2.85	2.48	2.22	2.03	1.82	1.55	1.38	
		032	7.41	5.95	5.64	4.91	4.39	4.02	3.59	3.06	2.73	
		040	41.6	31.7	30.0	26.1	23.3	21.4	19.1	16.3	14.6	12.4
		050	67.0	52.3	49.5	43.1	38.5	35.3	31.6	26.9	24.0	20.4
		063	129	119	119	111	99	91	81	69	62	52
		080	431	293	277	241	216	198	177	150	134	113
		110	1270	825	781	680	608	557	497	423	376	316
		140	2230	1310	1240	1080	960	880	790	670	590	490
		180	4270	2840	2690	2340	2090	1910	1710	1440	1270	1020
		250	10400	4560	4310	3750	3340	3060	2710	2260	1930	1420
	300	025	3.76	3.06	2.90	2.55	2.28	2.09	1.86	1.59	1.42	
		032	7.41	6.05	5.73	5.04	4.50	4.12	3.69	3.14	2.81	
		040	41.6	32.1	30.4	26.8	23.9	21.9	19.6	16.7	14.9	12.7
		050	67.0	53.1	50.2	44.2	39.5	36.2	32.3	27.6	24.6	20.9
		063	129	120	120	113	101	93	83	71	63	54
		080	431	297	281	247	221	203	181	154	138	116
		110	1270	838	793	697	623	571	510	434	386	325
		140	2230	1330	1260	1110	990	900	810	690	610	510
		180	4270	2890	2730	2400	2140	1960	1750	1480	1310	1070
		250	10400	4620	4380	3840	3430	3140	2790	2330	2020	1530
	330	025	3.76	3.10	2.93	2.60	2.32	2.13	1.90	1.62	1.45	
		032	7.41	6.12	5.80	5.13	4.59	4.21	3.76	3.21	2.87	
		040	41.6	32.5	30.8	27.3	24.4	22.4	20.0	17.1	15.2	13.0
		050	67.0	53.7	50.8	45.0	40.3	36.9	33.0	28.1	25.1	21.4
		063	129	122	122	116	103	95	85	72	65	55
		080	431	301	285	252	226	207	185	157	140	119
		110	1270	847	802	710	636	583	520	443	395	333
		140	2230	1340	1270	1130	1010	920	820	700	620	520
		180	4270	2920	2760	2450	2190	2000	1790	1520	1340	1100
		250	10400	4680	4420	3910	3500	3200	2850	2390	2080	1620
8	45	032	1.39	0.76	0.67	0.57	0.50	0.46	0.39	0.30		
	60	032	1.39	0.89	0.79	0.68	0.60	0.55	0.48	0.39	0.32	
	90	025	2.13	1.31	1.16	0.99	0.89	0.81	0.72	0.61	0.53	
		032	4.77	2.95	2.63	2.24	2.00	1.83	1.63	1.37	1.19	
		040	10.9	7.77	7.29	7.03	6.84	6.70	6.51	5.52	4.86	3.92
		050	50.1	30.8	27.4	23.4	20.8	19.1	17.0	14.2	12.4	9.6
		063	85.1	51.6	45.9	39.1	34.9	31.8	28.2	23.4	20.0	14.4
		080	164	117	110	101	90	82	73	61	52	38
		110	359	257	239	203	181	165	145	117	96	57
		140	950	520	461	392	347	315	273	211	157	
		180	2100	1050	930	790	690	620	530	370	220	
		250	4150	2180	1930	1610	1400	1220	970	480		
	120	025	2.13	1.49	1.35	1.16	1.03	0.95	0.84	0.71	0.63	
		032	4.77	3.35	3.05	2.60	2.33	2.13	1.90	1.61	1.42	
		040	30.6	20.0	18.2	15.5	13.9	12.7	11.3	9.6	8.6	7.2
		050	50.1	34.7	31.6	27.0	24.1	22.0	19.7	16.7	14.7	12.0
		063	85.1	58.3	53.0	45.2	40.4	37.0	32.9	27.7	24.2	19.2
		080	242	174	158	135	120	110	98	83	73	58
		110	591	354	322	274	245	224	198	165	142	105
		140	1160	745	677	577	514	469	414	340	285	189
		180	2100	1190	1080	920	820	740	650	510	390	
		250	4150	2470	2230	1890	1660	1490	1270	890	520	

● RGIS straight shaft (1 dwell)

Cam curve/MS

Index number	Total index angle (deg)	Size	Static rated output torque (N·m)	Rated dynamic output torque (N·m)								
				Input shaft rotational speed (rpm)								
				30	60	90	120	150	200	300	400	600
8	150	025	2.13	1.60	1.48	1.27	1.13	1.04	0.93	0.79	0.70	
		032	4.77	3.59	3.34	2.85	2.54	2.33	2.08	1.77	1.57	
		040	30.6	21.3	19.8	16.9	15.1	13.8	12.4	10.5	9.4	7.9
		050	50.1	37.1	34.4	29.4	26.2	24.0	21.4	18.2	16.2	13.5
		063	85.1	62.3	57.8	49.4	44.1	40.4	36.0	30.5	26.9	22.0
		080	242	186	172	147	131	120	107	91	80	66
		110	591	378	351	299	267	244	217	183	160	126
		140	1160	798	740	631	563	514	457	381	328	246
		180	2860	1580	1460	1250	1110	1010	890	730	610	390
		250	5840	3680	3410	2900	2570	2340	2040	1600	1240	
	180	025	2.13	1.67	1.57	1.34	1.20	1.10	0.98	0.84	0.74	
		032	4.77	3.75	3.54	3.02	2.70	2.47	2.21	1.88	1.67	
		040	30.6	22.2	21.0	17.9	16.0	14.7	13.1	11.2	10.0	8.4
		050	50.1	38.5	36.4	31.0	27.7	25.4	22.7	19.3	17.2	14.4
		063	85.1	64.9	61.2	52.2	46.7	42.8	38.2	32.4	28.7	23.9
		080	242	194	183	156	139	128	114	97	86	71
		110	738	513	484	413	369	338	301	255	225	184
		140	1640	1040	980	830	740	680	610	510	450	350
		180	2860	1640	1550	1320	1180	1080	950	790	680	490
		250	5840	3830	3610	3070	2730	2490	2190	1780	1450	860
	210	025	2.13	1.72	1.63	1.40	1.25	1.15	1.03	0.87	0.78	
		032	4.77	3.85	3.65	3.14	2.81	2.58	2.30	1.96	1.75	
		040	30.6	22.8	21.6	18.6	16.6	15.3	13.6	11.6	10.4	8.8
		050	50.1	39.5	37.4	32.3	28.8	26.4	23.6	20.1	17.9	15.1
		063	85.1	66.6	63.0	54.4	48.6	44.5	39.7	33.8	30.0	25.1
		080	242	199	188	162	145	133	119	101	90	75
		110	738	527	498	430	384	352	314	266	236	196
		140	1640	1060	1010	870	780	710	630	540	470	380
		180	2860	1690	1600	1380	1230	1120	1000	840	730	560
		250	5840	3930	3720	3200	2850	2600	2300	1890	1590	1080
	240	025	2.13	1.75	1.66	1.45	1.29	1.18	1.06	0.90	0.80	
		032	4.77	3.92	3.71	3.24	2.90	2.66	2.37	2.02	1.80	
		040	30.6	23.2	22.0	19.2	17.2	15.7	14.0	12.0	10.7	9.1
		050	50.1	40.2	38.1	33.2	29.7	27.2	24.3	20.7	18.5	15.6
		063	85.1	67.8	64.2	56.0	50.0	45.9	41.0	34.9	31.0	26.1
		080	242	202	191	167	149	137	122	104	93	78
		110	738	536	507	443	396	362	323	275	244	204
		140	1640	1080	1030	900	800	730	650	550	490	400
		180	2860	1720	1630	1420	1270	1160	1030	870	760	600
		250	5840	4000	3780	3300	2940	2680	2380	1980	1690	1230
	270	025	2.13	1.77	1.68	1.48	1.32	1.21	1.08	0.92	0.83	
		032	4.77	3.97	3.76	3.32	2.97	2.72	2.43	2.07	1.85	
		040	30.6	23.5	22.3	19.6	17.6	16.1	14.4	12.3	11.0	9.3
		050	50.1	40.7	38.5	34.0	30.4	27.8	24.9	21.2	18.9	16.0
		063	85.1	68.6	65.0	57.3	51.2	46.9	41.9	35.7	31.8	26.9
		080	262	249	246	217	194	178	159	136	121	102
		110	738	542	513	453	405	371	331	282	251	210
		140	1640	1100	1040	920	820	750	670	570	500	420
		180	2860	1740	1650	1450	1300	1190	1060	890	790	630
		250	5840	4040	3830	3370	3010	2750	2440	2040	1770	1340

Roller gear cam drive (standard housing)

Output torque table

● RGIS straight shaft (1 dwell)

Cam curve/MS

Index number	Total index angle (deg)	Size	Static rated output torque (N·m)	Rated dynamic output torque (N·m)								
				Input shaft rotational speed (rpm)								
				30	60	90	120	150	200	300	400	600
8	300	025	2.89	2.43	2.30	2.03	1.83	1.68	1.50	1.28	1.14	
		032	4.77	4.01	3.80	3.36	3.02	2.77	2.48	2.11	1.89	
		040	30.6	23.7	22.5	19.9	17.9	16.4	14.6	12.5	11.2	9.5
		050	50.1	41.1	38.9	34.4	30.9	28.4	25.3	21.6	19.3	16.4
		063	85.1	69.2	65.5	58.0	52.2	47.8	42.7	36.4	32.5	27.5
		080	262	252	249	220	198	181	162	138	123	105
		110	738	547	518	459	412	378	337	287	256	215
		140	1640	1110	1050	930	830	760	680	580	520	430
		180	2860	1760	1660	1470	1320	1210	1080	910	810	660
		250	5840	4080	3860	3420	3070	2810	2500	2100	1820	1420
	330	025	2.89	2.44	2.31	2.05	1.86	1.70	1.52	1.30	1.16	
		032	4.77	4.04	3.83	3.39	3.07	2.82	2.52	2.15	1.92	
		040	30.6	23.9	22.6	20.0	18.2	16.6	14.9	12.7	11.3	9.7
		050	50.1	41.3	39.1	34.6	31.4	28.8	25.7	21.9	19.6	16.7
		063	85.1	69.7	66.0	58.4	53.0	48.6	43.4	37.0	33.0	28.0
		080	262	253	250	222	201	184	165	140	125	106
		110	738	551	522	462	419	384	343	292	260	220
		140	1640	1120	1060	940	850	780	690	590	520	440
		180	2860	1770	1680	1480	1340	1230	1100	930	820	680
		250	5840	4110	3890	3440	3120	2850	2540	2140	1870	1480
9	90	032	2.70	1.78	1.58	1.35	1.20	1.10	0.98	0.82	0.70	
		040	10.9	8.23	7.74	7.46	7.26	7.11	6.91	5.87	5.18	4.21
		050	37.9	23.3	20.8	17.7	15.8	14.5	12.9	10.8	9.4	7.3
		063	63.6	41.1	36.6	31.2	27.8	25.4	22.5	18.6	15.8	11.1
		080	152	79.2	70.5	60.0	53.5	48.8	43.2	35.5	29.8	20.1
		110	331	224	199	169	151	137	121	97	79	46
		140	760	422	375	319	282	256	222	170	125	
		180	1490	895	794	672	591	530	449	313	180	
		250	4150	2310	2040	1720	1490	1320	1070	600		
	120	025	1.49	1.08	0.99	0.85	0.75	0.69	0.62	0.52	0.46	
		032	2.70	1.98	1.81	1.54	1.38	1.26	1.12	0.95	0.83	
		040	10.9	9.12	8.81	8.49	8.27	8.10	7.88	6.73	5.98	4.99
		050	37.9	25.8	23.6	20.1	18.0	16.5	14.7	12.4	11.0	8.9
		063	63.6	45.5	41.6	35.5	31.7	29.0	25.8	21.7	18.9	14.8
		080	152	87.8	80.3	68.5	61.1	55.9	49.7	41.7	36.2	27.9
		110	359	302	288	246	219	200	178	149	128	96
		140	760	469	429	365	325	296	261	212	174	106
		180	2100	1240	1130	960	860	780	680	540	420	200
		250	4150	2560	2330	1980	1740	1570	1340	970	610	
	150	025	2.13	1.65	1.54	1.31	1.17	1.07	0.96	0.81	0.72	
		032	3.66	2.84	2.65	2.26	2.02	1.85	1.65	1.40	1.25	
		040	10.9	9.65	9.51	9.17	8.93	8.75	8.52	7.29	6.49	5.46
		050	37.9	27.3	25.4	21.7	19.4	17.8	15.9	13.5	12.0	9.9
		063	85.1	64.1	59.7	51.0	45.5	41.7	37.2	31.5	27.9	22.9
		080	164	146	144	131	117	108	96	81	72	59
		110	359	319	311	265	237	217	193	163	142	113
		140	950	649	605	516	460	420	373	311	268	199
		180	2100	1310	1220	1040	930	850	750	610	510	330
		250	5840	3780	3520	2990	2660	2420	2120	1680	1320	620

● RGIS straight shaft (1 dwell)

Cam curve/MS

Index number	Total index angle (deg)	Size	Static rated output torque (N·m)	Rated dynamic output torque (N·m)								
				Input shaft rotational speed (rpm)								
				30	60	90	120	150	200	300	400	600
9	180	025	2.13	1.71	1.62	1.38	1.23	1.13	1.01	0.86	0.77	
		032	4.77	3.83	3.63	3.10	2.77	2.54	2.27	1.93	1.72	
		040	10.9	9.98	9.98	9.64	9.39	9.20	8.96	7.67	6.84	5.79
		050	51.5	39.3	37.2	31.8	28.4	26.1	23.3	19.8	17.6	14.9
		063	85.1	66.2	62.7	53.6	47.9	43.9	39.2	33.3	29.5	24.6
		080	164	151	151	138	124	113	101	86	76	64
		110	359	330	326	279	249	228	203	172	152	124
		140	950	671	635	543	485	443	395	332	289	226
		180	2860	1680	1590	1360	1210	1110	980	820	700	520
		250	5840	3910	3690	3150	2810	2560	2250	1840	1520	940
	210	025	2.13	1.75	1.65	1.43	1.28	1.17	1.05	0.89	0.80	
		032	4.77	3.92	3.71	3.21	2.87	2.63	2.35	2.00	1.79	
		040	30.6	23.2	21.9	19.0	17.0	15.6	13.9	11.9	10.6	9.0
		050	51.5	40.1	38.0	32.9	29.4	27.0	24.1	20.5	18.3	15.5
		063	85.1	67.6	64.0	55.5	49.6	45.5	40.6	34.5	30.7	25.8
		080	164	154	154	143	128	117	105	89	79	67
		110	359	337	333	289	258	236	211	179	158	130
		140	1160	868	822	712	636	582	519	439	386	313
		180	2860	1720	1620	1410	1260	1150	1020	860	750	580
		250	5840	3990	3770	3270	2910	2660	2350	1940	1640	1140
	240	025	2.13	1.77	1.68	1.47	1.32	1.21	1.08	0.92	0.82	
		032	4.77	3.97	3.76	3.30	2.95	2.70	2.42	2.06	1.84	
		040	30.6	23.5	22.3	19.5	17.5	16.0	14.3	12.2	10.9	9.3
		050	51.5	40.7	38.5	33.8	30.2	27.7	24.7	21.1	18.8	16.0
		063	85.1	68.6	65.0	57.0	50.9	46.7	41.7	35.5	31.6	26.6
		080	164	156	156	147	131	120	108	92	82	69
		110	359	341	338	296	265	242	216	184	163	136
		140	1160	881	834	731	653	598	534	453	400	329
		180	2860	1740	1650	1450	1290	1180	1050	890	780	620
		250	5840	4040	3830	3350	2990	2730	2430	2020	1740	1280
	270	025	2.13	1.79	1.70	1.50	1.35	1.23	1.10	0.94	0.84	
		032	4.77	4.02	3.80	3.37	3.01	2.76	2.47	2.11	1.88	
		040	30.6	23.7	22.5	19.9	17.8	16.3	14.6	12.5	11.1	9.5
		050	51.5	41.1	38.9	34.4	30.8	28.3	25.3	21.5	19.2	16.3
		063	85.1	69.3	65.6	58.1	52.0	47.7	42.6	36.3	32.3	27.3
		080	164	158	158	150	134	123	110	94	83	71
		110	359	345	341	302	270	248	221	188	167	140
		140	1160	890	843	746	667	611	546	463	411	341
		180	2860	1760	1670	1470	1320	1210	1080	910	800	650
		250	5840	4080	3860	3420	3060	2790	2480	2080	1800	1380
	300	025	2.13	1.81	1.71	1.51	1.37	1.25	1.12	0.96	0.85	
		032	4.77	4.05	3.83	3.39	3.07	2.81	2.51	2.14	1.91	
		040	30.6	23.9	22.7	20.1	18.1	16.6	14.8	12.7	11.3	9.6
		050	51.5	41.4	39.2	34.7	31.4	28.7	25.7	21.9	19.6	16.6
		063	85.1	69.8	66.1	58.5	52.9	48.5	43.3	36.9	32.9	27.9
		080	164	159	159	151	136	125	112	95	85	72
		110	591	423	400	354	320	293	262	223	199	167
		140	1160	897	849	752	679	622	555	472	419	350
		180	2860	1770	1680	1490	1340	1230	1100	930	820	670
		250	5840	4110	3890	3440	3110	2840	2530	2130	1860	1460

Roller gear cam drive (standard housing)

Output torque table

● RGIS straight shaft (1 dwell)

Cam curve/MS

Index number	Total index angle (deg)	Size	Static rated output torque (N·m)	Rated dynamic output torque (N·m)								
				Input shaft rotational speed (rpm)								
				30	60	90	120	150	200	300	400	600
9	330	025	2.13	1.82	1.72	1.52	1.39	1.27	1.14	0.97	0.87	
		032	4.77	4.07	3.85	3.41	3.11	2.85	2.55	2.17	1.94	
		040	30.6	24.1	22.8	20.2	18.4	16.9	15.1	12.9	11.5	9.8
		050	51.5	41.6	39.4	34.9	31.8	29.1	26.0	22.2	19.8	16.9
		063	85.1	70.2	66.4	58.8	53.6	49.2	43.9	37.4	33.4	28.3
		080	164	160	160	152	138	127	113	97	86	73
		110	591	425	402	356	325	298	266	226	202	170
		140	1160	902	854	756	689	631	564	479	426	357
		180	2860	1780	1690	1490	1360	1250	1110	940	840	690
		250	5840	4130	3910	3460	3150	2890	2570	2170	1900	1520
10	90	032	2.70	1.86	1.66	1.42	1.26	1.16	1.03	0.86	0.75	
		040	10.2	7.93	7.09	6.05	5.40	4.95	4.41	3.72	3.26	2.62
		050	12.8	10.5	10.0	9.6	9.3	9.1	8.8	7.4	6.4	4.9
		063	25.3	20.0	18.9	18.2	17.6	17.2	16.6	15.5	13.8	9.8
		080	108	72.4	64.8	55.2	49.2	44.9	39.7	32.7	27.6	18.9
		110	225	178	168	154	137	124	110	89	73	43
		140	462	362	338	287	254	230	200	155	115	
		180	1220	739	658	556	489	438	369	253	138	
		250	3910	1990	1770	1480	1290	1140	920	510		
	120	025	1.49	1.12	1.03	0.88	0.78	0.72	0.64	0.54	0.48	
		032	2.70	2.04	1.87	1.60	1.43	1.31	1.16	0.98	0.87	
		040	10.9	9.39	9.11	8.78	8.55	8.38	8.16	6.97	6.19	5.18
		050	37.9	26.6	24.4	20.8	18.6	17.0	15.2	12.9	11.4	9.3
		063	63.6	46.9	43.0	36.7	32.8	30.0	26.7	22.5	19.7	15.6
		080	152	90.4	83.0	70.8	63.2	57.8	51.4	43.2	37.6	29.4
		110	331	255	234	200	178	163	144	120	104	77
		140	760	483	444	378	336	307	271	221	184	117
		180	1490	1020	940	800	710	640	560	440	350	150
		250	4150	2630	2410	2040	1810	1630	1400	1030	690	
	150	025	1.49	1.18	1.10	0.94	0.84	0.77	0.69	0.58	0.52	
		032	2.70	2.14	2.01	1.71	1.53	1.40	1.25	1.06	0.94	
		040	10.9	9.85	9.75	9.40	9.16	8.97	8.74	7.48	6.66	5.62
		050	37.9	27.8	26.1	22.3	19.9	18.2	16.3	13.8	12.3	10.2
		063	63.6	49.1	46.1	39.3	35.1	32.1	28.7	24.3	21.4	17.5
		080	152	94.8	88.9	75.8	67.7	62.0	55.3	46.7	41.2	33.4
		110	359	326	319	272	243	222	198	167	147	117
		140	760	508	476	405	362	330	293	244	209	153
		180	1490	1080	1010	860	760	700	610	500	410	260
		250	4150	2760	2580	2190	1950	1770	1540	1210	940	380
	180	025	1.49	1.21	1.15	0.99	0.88	0.81	0.72	0.61	0.55	
		032	3.66	2.99	2.83	2.43	2.17	1.99	1.78	1.51	1.35	
		040	10.9	10.1	10.1	9.8	9.6	9.4	9.1	7.8	7.0	5.9
		050	37.9	28.6	27.1	23.3	20.8	19.0	17.0	14.5	12.9	10.8
		063	85.1	67.2	63.6	54.7	48.8	44.8	40.0	34.0	30.2	25.2
		080	152	97.6	92.3	79.3	70.9	64.9	57.9	49.1	43.5	35.9
		110	359	335	331	284	254	232	207	176	155	127
		140	950	682	645	554	495	453	403	339	296	234
		180	2100	1380	1310	1120	1000	910	810	670	580	430
		250	4150	2840	2680	2300	2040	1860	1640	1330	1080	630

● RGIS straight shaft (1 dwell)

Cam curve/MS

Index number	Total index angle (deg)	Size	Static rated output torque (N·m)	Rated dynamic output torque (N·m)								
				Input shaft rotational speed (rpm)								
				30	60	90	120	150	200	300	400	600
10	210	025	2.13	1.77	1.67	1.46	1.30	1.19	1.07	0.91	0.81	
		032	3.66	3.05	2.88	2.51	2.24	2.06	1.84	1.57	1.39	
		040	10.9	10.3	10.3	10.1	9.9	9.7	9.4	8.1	7.2	6.1
		050	37.9	29.1	27.5	24.0	21.4	19.6	17.5	15.0	13.3	11.2
		063	85.1	68.4	64.8	56.4	50.4	46.2	41.3	35.1	31.2	26.3
		080	164	156	156	146	130	119	106	91	81	68
		110	359	341	337	293	262	240	214	182	161	134
		140	950	694	657	572	511	468	417	353	310	251
		180	2100	1410	1330	1160	1030	950	840	700	610	470
		250	5840	4030	3820	3320	2960	2700	2390	1980	1690	1200
	240	025	2.13	1.79	1.70	1.49	1.34	1.22	1.09	0.93	0.83	
		032	3.66	3.08	2.92	2.57	2.30	2.11	1.88	1.61	1.43	
		040	10.9	10.4	10.4	10.4	10.1	9.9	9.7	8.3	7.4	6.3
		050	37.9	29.4	27.9	24.6	21.9	20.1	18.0	15.3	13.7	11.6
		063	85.1	69.2	65.5	57.8	51.6	47.3	42.3	36.0	32.1	27.1
		080	164	158	158	149	133	122	109	93	83	70
		110	359	345	341	300	268	246	220	187	166	138
		140	950	703	665	586	524	480	428	363	320	263
		180	2100	1420	1350	1190	1060	970	860	730	640	500
		250	5840	4080	3860	3400	3030	2770	2460	2060	1770	1330
	270	025	2.13	1.81	1.71	1.51	1.36	1.25	1.12	0.95	0.85	
		032	3.66	3.11	2.94	2.61	2.34	2.15	1.92	1.64	1.46	
		040	10.9	10.5	10.5	10.5	10.3	10.1	9.9	8.4	7.5	6.4
		050	37.9	29.7	28.1	24.9	22.4	20.5	18.3	15.6	13.9	11.8
		063	85.1	69.8	66.1	58.5	52.6	48.2	43.1	36.7	32.7	27.7
		080	164	159	159	151	136	124	111	95	85	72
		110	359	347	344	304	273	251	224	190	169	142
		140	950	709	671	594	534	489	437	371	328	272
		180	2100	1430	1360	1200	1080	990	880	740	650	530
		250	5840	4110	3890	3440	3090	2830	2520	2110	1830	1420
	300	025	2.13	1.82	1.72	1.52	1.38	1.27	1.13	0.97	0.86	
		032	3.66	3.13	2.96	2.62	2.38	2.18	1.95	1.66	1.49	
		040	10.9	10.6	10.6	10.6	10.5	10.3	10.0	8.6	7.7	6.5
		050	37.9	29.8	28.2	25.0	22.7	20.8	18.6	15.9	14.2	12.0
		063	85.1	70.2	66.5	58.9	53.5	49.0	43.8	37.3	33.3	28.2
		080	164	160	160	152	138	126	113	96	86	73
		110	359	349	346	306	278	255	227	194	172	145
		140	950	713	675	598	543	497	444	377	335	279
		180	2100	1440	1370	1210	1100	1010	900	760	670	550
		250	5840	4140	3920	3460	3140	2880	2560	2160	1880	1490
	330	025	2.13	1.83	1.73	1.53	1.40	1.29	1.15	0.98	0.88	
		032	3.66	3.14	2.98	2.64	2.41	2.21	1.98	1.69	1.51	
		040	10.9	10.6	10.6	10.6	10.6	10.4	10.1	8.7	7.8	6.6
		050	37.9	30.0	28.4	25.1	23.0	21.1	18.8	16.1	14.3	12.2
		063	85.1	70.5	66.8	59.1	54.2	49.6	44.4	37.8	33.7	28.6
		080	164	161	161	153	140	128	114	98	87	74
		110	359	351	347	307	281	258	230	196	175	148
		140	950	717	679	601	550	504	450	383	340	285
		180	2100	1450	1370	1220	1110	1020	910	770	680	560
		250	5840	4150	3930	3480	3180	2910	2600	2190	1920	1550

Roller gear cam drive (standard housing)

Output torque table

Index series

● RGIS straight shaft (1 dwell)

Cam curve/MS

Index number	Total index angle (deg)	Size	Static rated output torque (N·m)	Rated dynamic output torque (N·m)								
				Input shaft rotational speed (rpm)								
				30	60	90	120	150	200	300	400	600
12	90	032	1.89	1.38	1.25	1.06	0.95	0.87	0.77	0.64	0.56	
		040	7.19	6.13	5.53	4.72	4.21	3.86	3.44	2.90	2.54	2.04
		050	12.8	11.1	10.6	10.2	9.9	9.7	9.4	7.9	6.9	5.4
		063	25.3	21.2	20.2	19.5	18.9	18.5	17.9	16.8	15.1	11.2
		080	108	77.0	69.4	59.2	52.8	48.2	42.7	35.5	30.3	21.8
		110	225	189	180	165	147	134	118	97	81	52
		140	462	385	363	308	274	249	217	171	133	58
		180	976	602	541	457	402	360	303	207		
		250	2870	1710	1530	1290	1120	990	800	460		
	120	032	1.89	1.49	1.38	1.17	1.05	0.96	0.86	0.72	0.64	
		040	7.19	6.49	6.01	5.13	4.58	4.20	3.75	3.18	2.81	2.30
		050	12.8	11.7	11.5	11.1	10.8	10.6	10.3	8.7	7.7	6.3
		063	25.3	22.8	22.3	21.4	20.9	20.4	19.8	18.9	17.3	13.8
		080	108	82.5	76.4	65.2	58.2	53.2	47.4	39.9	34.9	27.5
		110	225	203	198	181	162	148	131	110	95	72
		140	462	414	400	341	304	277	245	201	169	112
		180	976	647	598	508	450	408	354	273	203	
		250	2870	1830	1690	1430	1260	1140	970	700	440	
	150	032	1.89	1.54	1.46	1.24	1.11	1.02	0.91	0.77	0.68	
		040	10.2	9.14	8.64	7.37	6.59	6.04	5.39	4.59	4.09	3.44
		050	12.8	12.1	12.1	11.6	11.3	11.1	10.8	9.2	8.2	6.8
		063	25.3	23.6	23.5	22.7	22.1	21.6	21.0	20.1	18.6	15.3
		080	108	85.5	80.8	68.9	61.6	56.4	50.3	42.6	37.5	30.6
		110	225	210	209	192	171	157	139	118	103	82
		140	462	429	424	361	322	294	261	218	188	140
		180	1220	876	827	704	627	571	504	411	340	213
		250	3910	2340	2210	1880	1670	1510	1320	1040	810	350
	180	032	1.89	1.58	1.49	1.29	1.15	1.06	0.94	0.80	0.71	
		040	10.2	9.30	8.81	7.63	6.82	6.25	5.58	4.76	4.24	3.58
		050	12.8	12.3	12.3	12.0	11.7	11.5	11.2	9.6	8.5	7.1
		063	25.3	24.1	24.1	23.5	22.9	22.4	21.8	21.0	19.5	16.2
		080	108	87.3	82.6	71.5	63.9	58.6	52.3	44.4	39.3	32.5
		110	331	280	265	230	205	188	168	142	125	103
		140	760	534	505	437	390	357	318	268	234	184
		180	1220	894	846	732	652	596	528	437	372	264
		250	3910	2390	2260	1950	1740	1580	1390	1130	920	550
	210	032	1.89	1.60	1.51	1.33	1.19	1.09	0.97	0.83	0.74	
		040	10.2	9.40	8.90	7.82	6.99	6.40	5.72	4.88	4.35	3.69
		050	12.8	12.4	12.4	12.3	12.0	11.8	11.4	9.8	8.7	7.4
		063	25.3	24.4	24.4	24.2	23.5	23.1	22.5	21.6	20.1	16.8
		080	108	88.4	83.7	73.5	65.7	60.2	53.7	45.7	40.6	33.9
		110	331	284	269	236	211	193	172	146	130	107
		140	760	541	512	449	401	367	327	277	243	196
		180	1220	906	857	752	671	613	545	455	393	296
		250	3910	2420	2290	2010	1790	1630	1440	1190	1000	680
	240	032	1.89	1.61	1.53	1.35	1.21	1.11	0.99	0.84	0.75	
		040	10.2	9.47	8.96	7.94	7.12	6.53	5.83	4.97	4.44	3.77
		050	12.8	12.5	12.5	12.5	12.2	12.0	11.7	10.0	8.9	7.5
		063	25.3	24.6	24.6	24.6	24.0	23.5	22.9	22.0	20.5	17.3
		080	108	89.2	84.4	74.7	67.0	61.4	54.9	46.7	41.5	34.9
		110	331	286	271	240	215	197	176	150	133	111
		140	760	545	516	457	410	375	335	284	250	205
		180	1220	914	865	765	686	627	558	469	408	318
		250	3910	2440	2310	2040	1830	1670	1480	1230	1050	760

● RGIS straight shaft (1 dwell)

Cam curve/MS

Index number	Total index angle (deg)	Size	Static rated output torque (N·m)	Rated dynamic output torque (N·m)								
				Input shaft rotational speed (rpm)								
				30	60	90	120	150	200	300	400	600
12	270	032	1.89	1.62	1.53	1.36	1.23	1.13	1.01	0.86	0.77	
		040	10.9	10.6	10.6	10.6	10.5	10.3	10	8.6	7.6	6.5
		050	19.9	19.5	19.5	19.5	19.3	18.9	18.4	15.9	14.2	12.0
		063	25.3	24.7	24.7	24.7	24.4	23.9	23.3	22.4	20.9	17.7
		080	108	89.7	84.9	75.2	68.2	62.5	55.8	47.5	42.3	35.7
		110	331	288	273	241	219	201	179	152	136	114
		140	760	549	519	460	417	382	341	289	256	212
		180	1220	919	870	770	698	639	569	479	420	335
		250	3910	2450	2320	2050	1860	1700	1510	1260	1090	830
	300	032	2.70	2.33	2.21	1.95	1.79	1.64	1.46	1.25	1.11	
		040	10.9	10.7	10.7	10.7	10.7	10.4	10.2	8.7	7.7	6.6
		050	19.9	19.6	19.6	19.6	19.5	19.1	18.7	16.1	14.4	12.2
		063	63.6	53.2	50.4	44.6	40.8	37.4	33.4	28.5	25.4	21.5
		080	152	103	97	86	79	72	65	55	49	41
		110	331	289	274	242	222	203	182	155	138	116
		140	760	551	522	462	423	387	346	294	261	217
		180	1490	1170	1110	980	900	820	730	620	550	450
		250	4150	2980	2820	2500	2280	2090	1860	1570	1370	1080
	330	032	2.70	2.34	2.21	1.96	1.80	1.66	1.48	1.26	1.13	
		040	10.9	10.7	10.7	10.7	10.7	10.6	10.3	8.8	7.8	6.7
		050	19.9	19.6	19.6	19.6	19.6	19.4	18.9	16.3	14.6	12.4
		063	63.6	53.4	50.5	44.7	41.0	37.9	33.8	28.9	25.7	21.8
		080	152	103	98	86	79	73	65	56	50	42
		110	331	290	275	243	223	206	184	157	140	118
		140	760	553	524	463	425	392	350	298	264	221
		180	1490	1170	1110	980	900	830	740	630	560	460
		250	4150	2990	2830	2510	2300	2120	1880	1590	1390	1120
15	90	080	31.8	28.4	27.3	26.2	25.5	24.9	24.0	22.5	20.0	14.1
		110	143	109	99	85	75	68	60	49	39	23
		140	285	254	244	222	198	179	157	123	96	41
		180	591	523	496	420	370	333	283	201	122	
		250	1630	1130	1020	860	750	660	530	280		
	120	080	80.0	63.7	59.6	50.8	45.4	41.5	37.0	31.1	27.2	21.4
		110	200	130	122	104	92	84	75	62	53	39
		140	285	266	263	240	214	195	172	141	118	78
		180	591	550	536	456	404	367	320	250	191	
		250	2020	1510	1410	1190	1050	950	810	590	390	
	150	080	80.0	65.2	61.7	53.1	47.4	43.4	38.7	32.8	28.9	23.5
		110	200	133	126	108	96	88	78	66	57	45
		140	420	357	338	290	259	237	210	176	151	114
		180	976	688	650	558	497	453	400	326	269	168
		250	2020	1540	1460	1250	1110	1010	880	680	520	190
	180	080	80.0	66.1	62.5	54.7	48.9	44.8	39.9	33.9	30.0	24.8
		110	200	134	127	111	99	91	81	68	60	48
		140	420	362	342	299	267	245	218	183	160	125
		180	976	698	660	576	514	469	416	344	292	207
		250	2020	1560	1480	1290	1150	1040	920	740	600	330
	210	080	80.0	66.6	63.1	55.8	50.0	45.8	40.9	34.8	30.9	25.8
		110	200	135	128	113	101	93	83	70	62	51
		140	420	365	345	306	273	250	223	188	166	133
		180	976	704	666	589	526	481	427	357	308	231
		250	2870	1980	1880	1660	1480	1350	1200	990	830	570

Roller gear cam drive (standard housing)

Output torque table

Index series

● RGIS straight shaft (1 dwell)

Cam curve/MS

Index number	Total index angle (deg)	Size	Static rated output torque (N·m)	Rated dynamic output torque (N·m)								
				Input shaft rotational speed (rpm)								
				30	60	90	120	150	200	300	400	600
15	240	080	80.0	67.0	63.4	56.1	50.9	46.6	41.6	35.4	31.5	26.4
		110	200	136	129	114	103	95	84	72	63	52
		140	420	367	347	307	278	255	227	193	170	139
		180	976	708	670	592	536	491	436	366	319	248
		250	2870	1990	1890	1670	1510	1380	1220	1020	870	640
	270	080	80.0	67.2	63.6	56.3	51.6	47.3	42.2	36.0	32.0	27.0
		110	200	136	129	114	105	96	86	73	65	54
		140	420	368	349	308	282	259	231	196	173	143
		180	976	710	672	595	544	498	444	374	328	261
		250	2870	2000	1890	1670	1530	1400	1240	1040	900	690
	300	080	80.0	67.4	63.8	56.5	51.8	47.9	42.8	36.4	32.5	27.4
		110	200	137	129	115	105	97	87	74	66	55
		140	420	369	349	309	284	262	234	199	176	146
		180	976	712	674	597	547	505	450	380	334	270
		250	2870	2010	1900	1680	1540	1420	1260	1060	920	720
	330	080	80.0	67.5	63.9	56.6	51.9	48.4	43.2	36.8	32.8	27.8
		110	200	137	130	115	105	98	88	75	66	56
		140	420	370	350	310	284	265	236	201	179	149
		180	976	714	676	598	548	511	455	385	340	278
		250	2870	2010	1900	1680	1540	1440	1280	1080	940	750
16	90	080	31.8	28.7	27.7	26.7	25.9	25.3	24.4	22.9	20.5	14.7
		110	143	110	101	86	76	70	61	50	41	24
		140	305	267	257	234	208	189	164	128	97.1	34.2
		180	591	530	504	427	377	339	290	209	132	
		250	1630	1140	1040	870	760	670	540	300		
	120	080	31.8	30.0	29.7	28.6	27.8	27.2	26.4	25.1	22.9	18.0
		110	143	115	107	92	82	75	66	55	47	34
		140	285	268	266	243	216	197	174	143	120	81
		180	591	554	542	461	409	372	325	256	198	
		250	1630	1190	1110	940	830	750	640	450	280	
	150	080	31.8	30.6	30.6	29.8	29.0	28.4	27.6	26.4	24.3	19.8
		110	143	117	110	95	85	78	69	58	51	39
		140	285	274	274	253	226	207	183	153	132	98
		180	591	567	560	482	429	391	345	280	231	142
		250	2020	1550	1470	1260	1120	1010	890	700	540	210
	180	080	80.0	66.3	62.8	55.1	49.2	45.1	40.2	34.1	30.3	25.1
		110	143	118	112	98	87	80	71	60	53	42
		140	285	277	277	261	233	213	189	159	139	109
		180	591	574	567	497	443	404	358	296	251	176
		250	2020	1570	1480	1300	1150	1050	920	750	610	350
	210	080	80.0	66.8	63.2	56.0	50.3	46.0	41.1	35.0	31.1	26.0
		110	200	136	128	114	102	93	83	71	62	51
		140	285	279	279	265	238	218	194	164	144	116
		180	591	578	571	505	453	414	368	307	264	198
		250	2020	1580	1490	1320	1180	1080	950	780	660	440

● RGIS straight shaft (1 dwell)

Cam curve/MS

Index number	Total index angle (deg)	Size	Static rated output torque (N·m)	Rated dynamic output torque (N·m)								
				Input shaft rotational speed (rpm)								
				30	60	90	120	150	200	300	400	600
16	240	080	80.0	67.1	63.5	56.2	51.1	46.8	41.8	35.6	31.7	26.6
		110	200	136	129	114	104	95	85	72	64	53
		140	285	281	281	266	242	222	198	167	148	121
		180	591	581	574	508	461	422	375	315	274	212
		250	2020	1590	1500	1330	1200	1100	970	810	690	490
	270	080	80.0	67.3	63.7	56.4	51.7	47.5	42.4	36.1	32.2	27.1
		110	200	137	129	114	105	96	86	73	65	54
		140	285	282	282	267	245	225	201	170	151	124
		180	976	712	674	596	546	501	446	376	330	264
		250	2020	1590	1510	1330	1220	1120	990	830	710	530
	300	080	80.0	67.5	63.9	56.6	51.9	48.1	42.9	36.6	32.6	27.6
		110	200	137	130	115	105	97	87	74	66	55
		140	285	282	282	268	246	228	203	173	153	127
		180	976	714	675	598	548	507	452	382	336	273
		250	2020	1600	1510	1340	1220	1130	1010	840	730	560
	330	080	80.0	67.6	64.0	56.7	52.0	48.6	43.4	37.0	33.0	27.9
		110	200	137	130	115	105	98	88	75	67	56
		140	285	283	283	268	246	230	205	175	155	129
		180	976	715	677	599	549	513	457	387	342	280
		250	2020	1600	1510	1340	1230	1140	1020	860	750	590

Roller gear cam drive (standard housing)

Output torque table

Index series

● RGIS straight shaft (2 dwell)

Cam curve/MS

Index number	Total index angle (deg)	Size	Static rated output torque (N·m)	Rated dynamic output torque (N·m)								
				Input shaft rotational speed (rpm)								
				15	30	45	60	75	100	150	200	300
16	120	025	1.49	1.04	0.98	0.83	0.74	0.68	0.61	0.52	0.46	0.38
		032	2.70	1.90	1.78	1.52	1.36	1.25	1.11	0.94	0.84	0.69
		040	16.1	13.0	12.9	12.4	12.1	11.9	11.6	10.0	8.8	7.5
		050	19.9	16.2	16.1	15.5	15.1	14.8	14.4	13.8	12.8	10.7
		063	63.6	43.9	41.1	35.1	31.4	28.7	25.6	21.7	19.1	15.6
		080	164	133	132	120	108	98.5	87.9	74.6	66.0	54.6
		110	359	291	285	243	217	199	177	149	131	105
		140	950	589	553	471	420	384	341	285	246	185
		180	2860	1480	1380	1180	1050	960	850	700	590	410
		250	5840	3450	3230	2750	2440	2220	1950	1560	1240	630
	150	025	2.13	1.60	1.51	1.31	1.17	1.07	0.96	0.81	0.73	0.61
		032	4.77	3.59	3.40	2.94	2.63	2.41	2.15	1.83	1.63	1.38
		040	30.6	21.3	20.2	17.4	15.6	14.3	12.8	10.9	9.7	8.2
		050	50.1	37.1	35.1	30.3	27.1	24.8	22.2	18.9	16.8	14.2
		063	85.1	62.3	59.0	50.9	45.5	41.7	37.2	31.7	28.1	23.5
		080	164	142	142	131	117	108	96	82	73	61
		110	591	378	358	309	276	253	225	191	169	139
		140	1160	798	755	652	582	533	475	401	352	283
		180	2860	1580	1490	1290	1150	1050	930	780	680	510
		250	5840	3680	3480	3000	2670	2440	2160	1770	1490	990
	180	025	2.13	1.67	1.58	1.39	1.24	1.14	1.01	0.87	0.77	0.65
		032	4.77	3.75	3.55	3.11	2.78	2.55	2.28	1.94	1.73	1.47
		040	30.6	22.2	21.0	18.5	16.5	15.1	13.5	11.5	10.3	8.8
		050	50.1	38.5	36.5	32.0	28.6	26.2	23.4	20.0	17.8	15.1
		063	119	74.0	70.1	61.5	55.0	50.4	45.0	38.3	34.1	28.8
		080	242	194	183	161	144	132	118	100	89	75
		110	591	393	372	327	292	267	239	203	180	150
		140	1160	832	787	691	617	565	504	427	378	310
		180	2860	1640	1560	1370	1220	1120	990	840	730	580
		250	5840	3830	3620	3180	2830	2590	2300	1910	1640	1210
	210	025	2.89	2.33	2.20	1.95	1.75	1.60	1.43	1.22	1.09	0.93
		032	4.77	3.85	3.65	3.23	2.90	2.66	2.38	2.03	1.81	1.54
		040	30.6	22.8	21.6	19.1	17.2	15.7	14.1	12.0	10.7	9.1
		050	50.1	39.5	37.4	33.1	29.8	27.3	24.4	20.8	18.6	15.8
		063	119	76.0	71.9	63.7	57.2	52.4	46.8	39.9	35.6	30.1
		080	242	199	188	166	150	137	122	104	93	79
		110	591	403	382	338	304	278	249	212	188	158
		140	1640	1060	1010	890	800	730	650	560	490	410
		180	2860	1690	1600	1420	1270	1160	1040	880	770	630
		250	5840	3930	3720	3290	2950	2700	2400	2010	1750	1350
	240	025	2.89	2.37	2.24	1.99	1.81	1.66	1.48	1.26	1.13	0.96
		032	4.77	3.92	3.71	3.29	2.99	2.74	2.45	2.09	1.87	1.59
		040	30.6	23.2	22.0	19.5	17.7	16.2	14.5	12.4	11.1	9.4
		050	50.1	40.2	38.1	33.7	30.6	28.1	25.1	21.4	19.1	16.3
		063	119	77.3	73.2	64.8	58.9	54.0	48.2	41.1	36.7	31.1
		080	242	202	191	169	154	141	126	108	96	81
		110	591	411	389	344	313	287	256	218	194	163
		140	1640	1080	1030	910	830	760	680	570	510	430
		180	2860	1720	1630	1440	1310	1200	1070	910	800	660
		250	5840	4000	3780	3350	3040	2780	2480	2090	1830	1450
	270	025	2.89	2.40	2.27	2.01	1.85	1.70	1.52	1.29	1.16	0.98
		032	4.77	3.97	3.76	3.33	3.06	2.81	2.51	2.14	1.91	1.63
		040	30.6	23.5	22.3	19.7	18.1	16.6	14.8	12.7	11.3	9.6
		050	50.1	40.7	38.5	34.1	31.3	28.7	25.7	21.9	19.6	16.6
		063	119	78.3	74.1	65.6	60.2	55.3	49.4	42.1	37.6	31.9

● RGIS straight shaft (2 dwell)

Cam curve/MS

Index number	Total index angle (deg)	Size	Static rated output torque (N·m)	Rated dynamic output torque (N·m)								
				Input shaft rotational speed (rpm)								
				15	30	45	60	75	100	150	200	300
16	270	080	242	205	194	172	157	144	129	110	98	83
		110	591	416	394	348	320	293	262	223	199	168
		140	1640	1100	1040	920	840	770	690	590	520	440
		180	2860	1740	1650	1460	1340	1230	1100	930	830	690
		250	5840	4040	3830	3390	3110	2850	2540	2150	1890	1530
	300	025	2.89	2.43	2.30	2.03	1.87	1.73	1.55	1.32	1.18	1.00
		032	4.77	4.01	3.80	3.36	3.09	2.86	2.56	2.18	1.95	1.66
		040	30.6	23.7	22.5	19.9	18.2	16.9	15.1	12.9	11.5	9.8
		050	50.1	41.1	38.9	34.4	31.6	29.3	26.2	22.3	19.9	17.0
		063	119	79.0	74.8	66.2	60.7	56.3	50.3	42.9	38.3	32.6
		080	262	252	249	220	202	187	167	143	127	108
		110	738	547	518	459	421	390	348	297	265	225
		140	1640	1110	1050	930	850	790	710	600	540	450
		180	2860	1760	1660	1470	1350	1250	1120	950	840	700
		250	5840	4080	3860	3420	3130	2900	2590	2190	1930	1580
	330	025	2.89	2.44	2.31	2.05	1.88	1.76	1.57	1.34	1.20	1.02
		032	4.77	4.04	3.83	3.39	3.11	2.91	2.60	2.22	1.98	1.69
		040	30.6	23.9	22.6	20.0	18.4	17.2	15.4	13.1	11.7	10.0
		050	50.1	41.3	39.1	34.6	31.8	29.7	26.6	22.7	20.2	17.2
		063	119	79.5	75.3	66.7	61.1	57.2	51.1	43.6	38.9	33.1
		080	262	253	250	222	203	190	170	145	130	110
		110	738	551	522	462	424	396	354	302	269	229
		140	1640	1120	1060	940	860	800	720	610	540	460
		180	2860	1770	1680	1480	1360	1270	1140	970	860	720
		250	5840	4110	3890	3440	3160	2950	2630	2230	1970	1630
18	120	025	1.49	1.08	1.02	0.87	0.78	0.71	0.64	0.54	0.48	0.40
		032	3.66	2.68	2.53	2.16	1.93	1.77	1.58	1.34	1.19	1.00
		040	10.9	9.12	9.09	8.76	8.54	8.36	8.15	6.97	6.21	5.24
		050	37.9	25.8	24.4	20.8	18.6	17.0	15.2	12.9	11.5	9.6
		063	85.1	60.6	57.1	48.8	43.6	39.9	35.6	30.2	26.8	22.2
		080	152	87.8	82.8	70.7	63.1	57.8	51.5	43.6	38.5	31.3
		110	359	302	297	254	226	207	185	156	137	111
		140	950	612	577	492	439	402	357	299	259	198
		180	2100	1240	1170	1000	890	810	720	590	500	340
		250	4150	2560	2410	2050	1820	1660	1450	1150	900	420
	150	025	2.13	1.65	1.56	1.35	1.21	1.11	0.99	0.84	0.75	0.64
		032	3.66	2.84	2.69	2.33	2.09	1.91	1.71	1.45	1.30	1.09
		040	10.9	9.65	9.65	9.46	9.22	9.03	8.80	7.54	6.72	5.70
		050	37.9	27.3	25.8	22.4	20.0	18.4	16.4	14.0	12.4	10.5
		063	85.1	64.1	60.6	52.6	47.0	43.1	38.5	32.7	29.1	24.4
		080	164	146	146	136	121	111	99	84	75	63
		110	359	319	315	274	244	224	200	170	150	124
		140	950	649	614	533	476	435	388	327	287	231
		180	2100	1310	1240	1080	960	880	780	650	570	430
		250	5840	3780	3580	3100	2760	2520	2230	1840	1560	1070
	180	025	2.13	1.71	1.62	1.43	1.27	1.17	1.04	0.89	0.79	0.67
		032	4.77	3.83	3.63	3.20	2.86	2.62	2.34	2.00	1.78	1.51
		040	30.6	22.7	21.5	18.9	16.9	15.5	13.9	11.8	10.6	9.0
		050	51.5	39.3	37.2	32.8	29.3	26.9	24.0	20.5	18.3	15.5
		063	85.1	66.2	62.7	55.3	49.4	45.3	40.5	34.5	30.7	25.9
		080	164	151	151	143	127	117	104	89	79	67
		110	359	330	326	288	257	235	210	179	159	133
		140	1160	849	804	709	633	580	518	439	388	320
		180	2860	1680	1590	1400	1250	1150	1020	860	760	600
		250	5840	3910	3700	3260	2910	2660	2360	1970	1700	1270

Roller gear cam drive (standard housing)

Output torque table

Index series

● RGIS straight shaft (2 dwell)

Cam curve/MS

Index number	Total index angle (deg)	Size	Static rated output torque (N·m)	Rated dynamic output torque (N·m)								
				Input shaft rotational speed (rpm)								
				15	30	45	60	75	100	150	200	300
18	210	025	2.13	1.75	1.65	1.46	1.32	1.21	1.08	0.92	0.82	0.70
		032	4.77	3.92	3.71	3.28	2.96	2.72	2.43	2.07	1.85	1.57
		040	30.6	23.2	21.9	19.4	17.5	16.1	14.4	12.3	11.0	9.3
		050	51.5	40.1	38.0	33.6	30.4	27.8	24.9	21.2	18.9	16.1
		063	85.1	67.6	64.0	56.7	51.2	46.9	41.9	35.7	31.9	27.0
		080	164	154	154	146	132	121	108	92	82	70
		110	591	410	388	343	310	284	254	216	192	162
		140	1160	868	822	727	657	602	537	456	405	337
		180	2860	1720	1620	1440	1300	1190	1060	900	790	650
		250	5840	3990	3770	3340	3010	2760	2450	2060	1800	1400
	240	025	2.13	1.77	1.68	1.49	1.36	1.25	1.11	0.95	0.85	0.72
		032	4.77	3.97	3.76	3.33	3.05	2.79	2.49	2.13	1.90	1.62
		040	30.6	23.5	22.3	19.7	18.0	16.5	14.8	12.6	11.3	9.6
		050	51.5	40.7	38.5	34.1	31.2	28.6	25.5	21.8	19.5	16.6
		063	85.1	68.6	65.0	57.5	52.6	48.2	43.0	36.7	32.7	27.8
		080	164	156	156	148	136	124	111	95	85	72
		110	591	416	393	348	318	292	261	222	198	167
		140	1160	881	834	738	675	618	552	470	417	350
		180	2860	1740	1650	1460	1330	1220	1090	920	820	680
		250	5840	4040	3830	3390	3090	2830	2520	2130	1870	1490
	270	025	2.13	1.79	1.70	1.50	1.38	1.27	1.14	0.97	0.87	0.74
		032	4.77	4.02	3.80	3.37	3.09	2.85	2.55	2.17	1.94	1.65
		040	30.6	23.7	22.5	19.9	18.3	16.9	15.1	12.9	11.5	9.8
		050	51.5	41.1	38.9	34.4	31.6	29.2	26.1	22.2	19.9	16.9
		063	85.1	69.3	65.6	58.1	53.3	49.2	43.9	37.5	33.5	28.4
		080	164	158	158	150	137	127	113	97	86	73
		110	591	420	397	352	323	298	266	227	202	171
		140	1160	890	843	746	684	631	564	480	427	360
		180	2860	1760	1670	1470	1350	1250	1110	950	840	700
		250	5840	4080	3870	3420	3140	2890	2580	2180	1920	1560
	300	025	2.13	1.81	1.71	1.51	1.39	1.29	1.16	0.99	0.88	0.75
		032	4.77	4.05	3.83	3.39	3.11	2.90	2.59	2.21	1.98	1.68
		040	30.6	23.9	22.7	20.1	18.4	17.1	15.3	13.1	11.7	10.0
		050	51.5	41.4	39.2	34.7	31.8	29.7	26.5	22.6	20.2	17.2
		063	85.1	69.8	66.1	58.5	53.7	50.0	44.7	38.1	34.0	29.0
		080	164	159	159	151	139	129	115	98	88	75
		110	591	423	400	354	325	303	271	231	206	175
		140	1160	897	849	752	689	642	574	489	435	368
		180	2860	1770	1680	1490	1360	1270	1130	960	860	720
		250	5840	4110	3890	3450	3160	2940	2620	2220	1970	1610
	330	025	2.13	1.82	1.72	1.52	1.40	1.31	1.17	1.00	0.90	0.76
		032	4.77	4.07	3.85	3.41	3.13	2.93	2.63	2.24	2.01	1.71
		040	30.6	24.1	22.8	20.2	18.5	17.3	15.5	13.3	11.9	10.1
		050	51.5	41.6	39.4	34.9	32.0	29.9	26.9	22.9	20.5	17.5
		063	85.1	70.2	66.5	58.8	54.0	50.5	45.3	38.7	34.5	29.4
		080	164	160	160	152	139	130	117	100	89	76
		110	591	425	402	356	327	306	274	234	209	177
		140	1160	902	854	756	693	648	582	496	442	374
		180	2860	1780	1690	1490	1370	1280	1150	980	870	730
		250	5840	4140	3910	3460	3180	2970	2660	2260	2000	1660
20	90	040	10.2	7.93	7.32	6.25	5.58	5.11	4.56	3.87	3.43	2.85
		050	19.9	15.8	15.5	14.9	14.5	14.2	13.8	11.9	10.5	8.6
		063	25.3	20.0	19.5	18.8	18.3	17.9	17.3	16.5	15.1	11.8
		080	108	72.4	66.8	57.0	50.9	46.6	41.4	34.8	30.3	23.5
		110	225	178	174	159	142	129	115	96	82	61

● RGIS straight shaft (2 dwell)

Cam curve/MS

Index number	Total index angle (deg)	Size	Static rated output torque (N·m)	Rated dynamic output torque (N·m)								
				Input shaft rotational speed (rpm)								
				15	30	45	60	75	100	150	200	300
20	90	140	462	362	349	297	265	241	213	174	144	90
		180	1220	739	681	579	513	465	405	315	237	
		250	3910	1990	1830	1550	1370	1230	1050	760	480	
	120	025	1.49	1.12	1.06	0.90	0.81	0.74	0.66	0.56	0.50	0.42
		032	2.70	2.04	1.93	1.65	1.47	1.35	1.20	1.02	0.91	0.76
		040	10.9	9.39	9.39	9.06	8.83	8.65	8.43	7.21	6.43	5.43
		050	37.9	26.6	25.1	21.5	19.2	17.6	15.7	13.4	11.9	9.9
		063	63.6	46.9	44.4	37.9	33.9	31.0	27.7	23.5	20.8	17.1
		080	152	90.4	85.6	73.1	65.3	59.8	53.3	45.2	39.9	32.7
		110	331	255	241	206	184	168	150	127	111	89
		140	760	483	457	391	348	319	283	237	205	155
		180	1490	1030	970	830	740	670	590	490	410	280
		250	4150	2640	2490	2120	1890	1720	1500	1200	960	490
	150	025	1.49	1.18	1.11	0.97	0.87	0.80	0.71	0.61	0.54	0.46
		032	3.66	2.90	2.75	2.40	2.14	1.96	1.75	1.49	1.33	1.12
		040	10.9	9.85	9.85	9.70	9.45	9.26	9.02	7.73	6.90	5.85
		050	37.9	27.8	26.3	23.0	20.5	18.8	16.8	14.3	12.8	10.8
		063	63.6	49.2	46.5	40.6	36.2	33.2	29.6	25.2	22.4	18.7
		080	152	94.9	89.8	78.3	69.9	64.1	57.2	48.6	43.1	35.9
		110	359	326	322	281	251	230	205	174	154	128
		140	760	508	481	419	374	342	305	257	225	180
		180	2100	1340	1270	1110	990	900	800	670	580	450
		250	4150	2760	2610	2270	2020	1850	1630	1340	1120	750
	180	025	1.49	1.21	1.15	1.02	0.91	0.83	0.74	0.63	0.57	0.48
		032	3.66	2.99	2.83	2.51	2.24	2.05	1.84	1.57	1.40	1.18
		040	10.9	10.1	10.1	10.1	9.9	9.7	9.4	8.1	7.2	6.1
		050	37.9	28.6	27.1	24.0	21.4	19.7	17.6	15.0	13.4	11.3
		063	63.6	50.5	47.8	42.4	37.9	34.7	31.0	26.4	23.5	19.8
		080	152	97.6	92.4	81.8	73.1	67.0	59.9	50.9	45.3	38.1
		110	359	335	331	293	262	240	214	182	162	136
		140	950	682	646	571	511	468	417	354	313	258
		180	2100	1380	1310	1160	1030	950	840	710	620	500
		250	4150	2840	2680	2370	2120	1940	1720	1430	1230	900
	210	025	2.13	1.77	1.67	1.48	1.34	1.23	1.10	0.94	0.84	0.71
		032	3.66	3.05	2.88	2.55	2.32	2.12	1.90	1.62	1.44	1.23
		040	10.9	10.3	10.3	10.3	10.2	10.0	9.7	8.4	7.5	6.3
		050	37.9	29.1	27.5	24.4	22.1	20.3	18.1	15.5	13.8	11.7
		063	63.6	51.4	48.7	43.1	39.1	35.8	32.0	27.3	24.3	20.6
		080	164	156	156	148	134	123	110	94	84	71
		110	359	341	337	298	270	248	221	188	168	141
		140	950	695	657	582	528	484	432	367	325	271
		180	2100	1410	1330	1180	1070	980	870	740	650	530
		250	4150	2890	2730	2420	2190	2000	1780	1490	1300	1000
	240	025	2.13	1.79	1.70	1.50	1.38	1.26	1.13	0.96	0.86	0.73
		032	3.66	3.08	2.92	2.58	2.37	2.18	1.94	1.66	1.48	1.26
		040	10.9	10.4	10.4	10.4	10.4	10.2	10.0	8.6	7.6	6.5
		050	37.9	29.4	27.9	24.7	22.6	20.8	18.5	15.8	14.1	12.0
		063	63.6	52.0	49.3	43.6	40.0	36.7	32.8	28.0	24.9	21.1
		080	164	158	158	150	137	126	113	96	86	73
		110	359	345	341	302	277	254	227	193	172	145
		140	950	703	666	589	540	496	443	376	335	280
		180	2100	1420	1350	1190	1090	1000	890	760	670	550
		250	5840	4080	3860	3420	3130	2870	2560	2160	1900	1530

Output torque table

● RGIS straight shaft (2 dwell)

Cam curve/MS

Index number	Total index angle (deg)	Size	Static rated output torque (N·m)	Rated dynamic output torque (N·m)								
				Input shaft rotational speed (rpm)								
				15	30	45	60	75	100	150	200	300
20	270	025	2.13	1.81	1.71	1.51	1.39	1.29	1.15	0.98	0.88	0.75
		032	3.66	3.11	2.94	2.61	2.39	2.22	1.98	1.69	1.51	1.29
		040	10.9	10.5	10.5	10.5	10.5	10.4	10.2	8.7	7.8	6.6
		050	37.9	29.7	28.1	24.9	22.8	21.1	18.9	16.1	14.4	12.3
		063	63.6	52.5	49.7	44.0	40.3	37.4	33.4	28.5	25.4	21.6
		080	164	159	159	151	139	128	115	98	87	74
		110	359	347	344	304	279	259	231	197	176	149
		140	950	709	671	594	545	505	451	384	342	288
		180	2100	1430	1360	1200	1100	1020	910	770	690	570
		250	5840	4110	3890	3450	3160	2930	2610	2210	1950	1590
	300	025	2.13	1.82	1.72	1.52	1.40	1.31	1.17	1.00	0.89	0.76
		032	3.66	3.13	2.96	2.62	2.41	2.25	2.01	1.72	1.53	1.31
		040	10.9	10.6	10.6	10.6	10.6	10.6	10.3	8.9	7.9	6.7
		050	37.9	29.8	28.2	25.0	22.9	21.5	19.2	16.4	14.6	12.5
		063	85.1	70.2	66.5	58.9	54.0	50.5	45.2	38.5	34.4	29.3
		080	164	160	160	152	139	130	117	99	89	76
		110	359	349	346	306	281	262	235	200	179	151
		140	950	713	675	598	548	513	459	391	348	294
		180	2100	1440	1370	1210	1110	1040	930	790	700	590
		250	5840	4140	3920	3470	3180	2970	2650	2250	1990	1640
	330	025	2.13	1.83	1.73	1.53	1.41	1.31	1.19	1.01	0.90	0.77
		032	3.66	3.14	2.98	2.64	2.42	2.26	2.04	1.74	1.56	1.33
		040	10.9	10.6	10.6	10.6	10.6	10.6	10.5	9.0	8.0	6.8
		050	37.9	30.0	28.4	25.1	23.0	21.5	19.4	16.6	14.8	12.6
		063	85.1	70.5	66.8	59.1	54.2	50.7	45.8	39.1	34.9	29.7
		080	164	161	161	153	140	131	118	101	90	77
		110	359	351	347	307	282	264	238	203	181	154
		140	950	717	679	601	551	515	465	396	353	299
		180	2100	1450	1370	1220	1110	1040	940	800	710	600
		250	5840	4160	3930	3480	3190	2980	2690	2280	2020	1680
24	90	032	1.89	1.38	1.29	1.10	0.98	0.90	0.80	0.68	0.60	0.48
		040	7.19	6.13	5.71	4.87	4.35	3.99	3.56	3.02	2.68	2.22
		050	12.8	11.1	10.9	10.5	10.2	10.0	9.7	8.3	7.3	6.0
		063	25.3	21.3	20.9	20.1	19.6	19.2	18.6	17.7	16.3	13.0
		080	80.0	57.6	53.6	45.7	40.8	37.3	33.2	27.9	24.2	18.8
		110	200	119	110	94	84	77	68	56	48	34
		140	462	386	375	319	284	260	230	189	159	108
		180	976	603	560	476	422	382	333	258	194	
		250	2870	1710	1590	1350	1190	1070	920	670	440	
	120	032	1.89	1.49	1.41	1.21	1.08	0.99	0.88	0.75	0.66	0.60
		040	7.19	6.49	6.15	5.30	4.73	4.34	3.87	3.30	2.93	2.50
		050	12.8	11.8	11.7	11.4	11.1	10.9	10.6	9.1	8.1	6.7
		063	25.3	22.8	22.8	22.1	21.6	21.1	20.5	19.7	18.2	15.1
		080	108	82.5	78.1	67.3	60.1	55.0	49.1	41.6	36.8	30.3
		110	225	203	203	187	167	153	136	115	101	82
		140	462	414	409	352	314	287	256	214	186	143
		180	1220	844	799	687	612	559	494	407	342	232
		250	3910	2260	2140	1840	1630	1490	1310	1050	840	450

RGIS straight shaft (2 dwell)

Cam curve/MS

Index number	Total index angle (deg)	Size	Static rated output torque (N·m)	Rated dynamic output torque (N·m)								
				Input shaft rotational speed (rpm)								
				15	30	45	60	75	100	150	200	300
24	150	032	2.70	2.21	2.09	1.84	1.64	1.50	1.34	1.14	1.02	0.86
		040	10.2	9.14	8.66	7.61	6.80	6.23	5.57	4.75	4.23	3.59
		050	12.8	12.1	12.1	12.0	11.7	11.5	11.2	9.5	8.5	7.2
		063	63.6	50.5	47.8	42.1	37.6	34.4	30.8	26.2	23.3	19.5
		080	108	85.5	81.0	71.2	63.6	58.2	52.0	44.2	39.3	32.8
		110	225	210	210	198	177	162	144	123	108	90
		140	462	429	424	373	333	305	272	229	201	162
		180	1220	876	829	728	649	594	527	440	380	286
		250	3910	2340	2220	1940	1730	1580	1400	1150	970	650
	180	032	2.70	2.25	2.13	1.89	1.70	1.56	1.40	1.19	1.06	0.90
		040	10.2	9.30	8.81	7.80	7.03	6.45	5.76	4.91	4.39	3.73
		050	12.8	12.3	12.3	12.3	12.1	11.8	11.5	9.9	8.8	7.5
		063	63.6	51.6	48.8	43.2	39.0	35.7	31.9	27.2	24.2	20.4
		080	108	87.3	82.6	73.2	66.0	60.5	54.0	46.0	40.9	34.4
		110	225	214	214	203	183	168	150	128	113	95
		140	462	438	434	384	346	317	283	240	212	174
		180	1490	1130	1070	950	850	780	700	590	510	410
		250	3910	2390	2260	2000	1800	1650	1460	1220	1050	770
	210	032	2.70	2.28	2.16	1.91	1.75	1.61	1.43	1.22	1.09	0.93
		040	10.2	9.40	8.90	7.88	7.21	6.61	5.90	5.04	4.50	3.83
		050	12.8	12.4	12.4	12.4	12.4	12.1	11.8	10.1	9.0	7.7
		063	63.6	52.2	49.5	43.8	40.0	36.7	32.8	28.0	24.9	21.1
		080	152	101	95	85	77	71	63	54	48	41
		110	225	217	217	206	188	173	154	131	117	98
		140	760	541	512	453	414	380	339	288	255	212
		180	1490	1150	1080	960	880	800	720	610	530	440
		250	4150	2930	2770	2450	2240	2050	1820	1530	1340	1050
	240	032	2.70	2.30	2.18	1.93	1.77	1.64	1.47	1.25	1.12	0.95
		040	10.2	9.47	8.96	7.94	7.28	6.73	6.02	5.14	4.59	3.91
		050	12.8	12.5	12.5	12.5	12.5	12.4	12.0	10.3	9.2	7.8
		063	63.6	52.7	49.9	44.2	40.5	37.5	33.5	28.5	25.5	21.6
		080	152	102	96	85	78	72	65	55	49	42
		110	225	219	219	208	190	176	157	134	119	101
		140	760	545	516	457	419	388	346	294	262	219
		180	1490	1160	1090	970	890	820	730	620	550	450
		250	4150	2950	2800	2470	2270	2090	1870	1580	1380	1110
	270	032	2.70	2.32	2.20	1.94	1.78	1.67	1.49	1.27	1.14	0.97
		040	10.2	9.51	9.01	7.97	7.31	6.84	6.11	5.22	4.66	3.97
		050	37.9	29.9	28.3	25.1	23.0	21.5	19.2	16.4	14.7	12.5
		063	63.6	53.0	50.2	44.4	40.7	38.1	34.0	29.0	25.9	22.0
		080	152	102	97	86	79	74	66	56	50	42
		110	225	220	220	209	192	179	160	136	122	103
		140	760	549	520	460	422	394	352	300	267	224
		180	1490	1160	1100	970	890	840	750	630	560	470
		250	4150	2970	2810	2490	2280	2130	1900	1610	1420	1150
	300	032	2.70	2.33	2.21	1.95	1.79	1.68	1.51	1.29	1.15	0.98
		040	10.2	9.55	9.04	8.00	7.34	6.86	6.19	5.29	4.72	4.02
		050	37.9	30.1	28.5	25.2	23.1	21.6	19.5	16.6	14.9	12.7
		063	63.6	53.2	50.4	44.6	40.9	38.3	34.5	29.4	26.3	22.4
		080	152	103	97	86	79	74	67	57	51	43
		110	331	289	274	242	222	208	188	160	143	121
		140	760	551	522	462	424	396	357	304	271	229
		180	1490	1170	1110	980	900	840	760	640	570	480
		250	4150	2980	2820	2500	2290	2140	1930	1630	1440	1190

Roller gear cam drive (standard housing)

Output torque table

● RGIS straight shaft (2 dwell)

Cam curve/MS

Index number	Total index angle (deg)	Size	Static rated output torque (N·m)	Rated dynamic output torque (N·m)								
				Input shaft rotational speed (rpm)								
				15	30	45	60	75	100	150	200	300
24	330	032	2.70	2.34	2.21	1.96	1.80	1.68	1.53	1.31	1.17	0.99
		040	10.2	9.57	9.06	8.02	7.36	6.88	6.26	5.35	4.78	4.07
		050	37.9	30.2	28.5	25.3	23.2	21.7	19.7	16.8	15.0	12.8
		063	63.6	53.4	50.5	44.7	41.0	38.4	34.9	29.8	26.6	22.6
		080	152	103	98	86	79	74	67	58	51	44
		110	331	290	275	243	223	209	190	162	144	123
		140	760	553	524	464	425	398	362	308	275	232
		180	1490	1170	1110	980	900	840	770	650	580	490
		250	4150	2990	2830	2510	2300	2150	1950	1660	1470	1220
30	90	080	31.8	28.4	28.2	27.1	26.4	25.8	25.0	23.8	21.8	17.1
		110	143	109	103	87	78	71	63	53	45	33
		140	285	254	252	230	205	187	166	136	114	77
		180	591	524	513	436	388	352	307	242	188	
		250	2020	1440	1350	1150	1010	910	790	580	390	
	120	080	80.0	63.7	60.3	52.5	46.9	42.9	38.3	32.5	28.7	23.6
		110	200	130	123	107	96	87	78	66	58	46
		140	285	266	266	248	221	203	180	151	131	100
		180	591	550	543	472	420	383	339	278	232	153
		250	2020	1510	1430	1240	1100	1000	880	700	550	270
	150	080	80.0	65.2	61.7	54.7	49.0	44.9	40.1	34.1	30.2	25.2
		110	200	133	126	111	100	91	81	69	61	50
		140	420	357	338	299	268	245	219	185	162	131
		180	976	688	651	576	515	471	418	349	301	226
		250	2020	1540	1460	1290	1150	1050	930	760	630	410
	180	080	80.0	66.1	62.6	55.4	50.5	46.2	41.3	35.2	31.3	26.3
		110	200	134	127	113	103	94	84	71	63	52
		140	420	362	343	303	276	253	226	191	169	139
		180	976	698	660	584	532	486	433	364	318	250
		250	2020	1560	1480	1310	1190	1090	960	800	680	490
	210	080	80.0	66.6	63.1	55.8	51.2	47.3	42.2	36.0	32.1	27.1
		110	200	135	128	113	104	96	86	73	65	54
		140	420	365	345	306	280	259	231	196	174	144
		180	976	704	666	589	540	498	444	375	330	266
		250	2870	1980	1880	1660	1520	1400	1250	1050	910	710
	240	080	80.0	67.0	63.4	56.1	51.5	48.1	43.0	36.6	32.7	27.7
		110	200	136	129	114	104	98	87	74	66	56
		140	420	367	347	307	282	263	235	200	178	149
		180	976	708	670	593	543	507	452	383	338	277
		250	2870	1990	1890	1670	1530	1430	1270	1070	940	750
	270	080	80.0	67.2	63.6	56.3	51.7	48.3	43.6	37.2	33.2	28.1
		110	200	136	129	114	105	98	88	75	67	57
		140	420	368	349	309	283	265	239	203	181	152
		180	976	710	673	595	546	510	460	390	345	285
		250	2870	2000	1890	1680	1540	1440	1290	1090	960	780
	300	080	80.0	67.4	63.8	56.5	51.8	48.5	44.1	37.6	33.6	28.5
		110	200	137	129	115	105	98	89	76	68	58
		140	420	369	350	309	284	265	242	206	183	154
		180	976	712	674	597	547	512	466	396	351	292
		250	2870	2010	1900	1680	1540	1440	1310	1110	980	800
	330	080	80.0	67.5	63.9	56.6	51.9	48.5	44.5	38.1	34.0	28.9
		110	200	137	130	115	105	98	90	77	69	58
		140	420	370	350	310	284	266	244	208	185	157
		180	976	714	676	598	549	513	470	400	356	297
		250	2870	2010	1900	1680	1540	1440	1320	1120	990	820

RGIS straight shaft (2 dwell)

Cam curve/MS

Index number	Total index angle (deg)	Size	Static rated output torque (N·m)	Rated dynamic output torque (N·m)								
				Input shaft rotational speed (rpm)								
				15	30	45	60	75	100	150	200	300
32	90	080	31.8	28.7	28.6	27.6	26.8	26.2	25.4	24.2	22.2	17.5
		110	143	110	104	89	79	72	64	53	46	34
		140	285	257	256	234	209	190	168	139	117	81
		180	591	531	522	444	394	358	313	248	195	90
		250	1630	1150	1080	910	810	730	620	450	290	
	120	080	31.8	30.0	30.0	29.5	28.7	28.1	27.4	26.2	24.2	19.9
		110	143	115	108	95	84	77	69	58	51	40
		140	285	269	268	251	224	205	182	153	133	102
		180	591	555	548	477	425	388	343	282	237	159
		250	2020	1520	1440	1250	1110	1010	890	710	570	290
	150	080	31.8	30.6	30.6	30.6	30.0	29.3	28.6	27.4	25.5	21.2
		110	143	117	110	98	88	80	72	61	54	44
		140	285	274	274	260	234	214	190	161	141	114
		180	591	567	560	495	445	406	361	301	259	194
		250	2020	1550	1470	1300	1160	1060	940	770	640	430
	180	080	80.0	66.3	62.8	55.6	50.8	46.5	41.6	35.4	31.5	26.5
		110	143	118	112	99	90	83	74	63	56	46
		140	285	277	277	263	240	220	196	166	147	121
		180	591	574	567	502	458	419	373	314	273	214
		250	2020	1570	1480	1310	1200	1090	970	810	690	510
	210	080	80.0	66.8	63.2	56.0	51.3	47.5	42.5	36.2	32.2	27.3
		110	200	136	128	114	104	96	86	73	65	55
		140	285	279	279	265	243	225	201	171	151	125
		180	591	578	572	506	464	429	382	323	283	228
		250	2020	1580	1500	1320	1210	1120	990	830	720	560
	240	080	80.0	67.1	63.5	56.2	51.6	48.2	43.2	36.8	32.8	27.8
		110	200	136	129	114	105	98	88	75	66	56
		140	285	281	281	266	244	228	204	174	154	129
		180	591	581	574	508	466	435	389	329	291	237
		250	2020	1590	1500	1330	1220	1140	1010	850	750	590
	270	080	80.0	67.3	63.7	56.4	51.8	48.4	43.8	37.4	33.3	28.3
		110	200	137	129	114	105	98	89	76	67	57
		140	285	282	282	267	245	229	207	176	157	132
		180	976	712	674	596	547	511	462	392	347	287
		250	2020	1590	1510	1330	1220	1140	1030	870	760	620
	300	080	80.0	67.5	63.9	56.6	51.9	48.5	44.3	37.8	33.8	28.7
		110	200	137	130	115	105	98	90	77	68	58
		140	285	282	282	268	246	230	210	179	159	134
		180	976	714	675	598	548	512	468	397	353	294
		250	2020	1600	1510	1340	1230	1140	1040	880	780	630
	330	080	80.0	67.6	64.0	56.7	52.0	48.6	44.6	38.2	34.1	29.0
		110	200	137	130	115	105	99	90	77	69	59
		140	285	283	283	268	246	230	211	181	161	136
		180	976	715	677	599	549	514	471	402	357	299
		250	2020	1600	1510	1340	1230	1150	1050	890	790	650

Output torque table

● RGIS straight shaft (3 dwell)

Cam curve/MS

Index number	Total index angle (deg)	Size	Static rated output torque (N·m)	Rated dynamic output torque (N·m)								
				Input shaft rotational speed (rpm)								
				10	20	30	40	50	70	100	140	200
24	150	025	1.49	1.12	1.06	0.93	0.83	0.76	0.67	0.58	0.51	0.44
		032	2.70	2.04	1.93	1.70	1.52	1.39	1.22	1.06	0.92	0.79
		040	10.9	9.39	9.39	9.32	9.08	8.90	8.55	7.43	6.51	5.64
		050	19.9	17.3	17.3	17.2	16.7	16.4	15.9	15.4	14.1	12.1
		063	85.1	62.3	59.0	51.9	46.4	42.5	37.2	32.3	28.2	24.2
		080	164	142	142	134	120	110	96	83	73	63
		110	591	378	358	314	281	257	225	195	170	145
		140	1160	798	755	664	593	543	475	411	355	298
		180	2860	1580	1490	1310	1170	1070	940	800	690	560
		250	5840	3680	3490	3060	2730	2490	2170	1840	1540	1170
	180	025	2.89	2.26	2.14	1.90	1.71	1.57	1.37	1.20	1.05	0.91
		032	4.77	3.75	3.55	3.14	2.83	2.60	2.28	1.98	1.73	1.50
		040	30.6	22.2	21.0	18.6	16.8	15.4	13.5	11.8	10.3	8.9
		050	50.1	38.5	36.5	32.3	29.1	26.7	23.4	20.4	17.8	15.4
		063	85.1	64.9	61.4	54.4	49.1	45.0	39.4	34.2	29.9	25.8
		080	242	194	183	162	146	134	118	102	89	77
		110	591	393	372	330	297	272	239	207	181	155
		140	1160	832	787	697	628	576	504	437	380	323
		180	2860	1650	1560	1380	1240	1140	990	860	740	620
		250	5840	3830	3630	3210	2890	2640	2300	1980	1680	1340
	210	025	2.89	2.33	2.20	1.95	1.78	1.63	1.43	1.25	1.09	0.95
		032	4.77	3.85	3.65	3.23	2.95	2.71	2.37	2.06	1.81	1.57
		040	30.6	22.8	21.6	19.1	17.5	16.0	14.1	12.2	10.7	9.3
		050	50.1	39.5	37.4	33.1	30.3	27.8	24.4	21.2	18.6	16.1
		063	85.1	66.6	63.0	55.8	51.1	46.8	41.0	35.7	31.2	27.0
		080	242	199	188	166	152	140	122	106	93	81
		110	738	527	499	441	404	370	324	282	246	212
		140	1640	1060	1010	890	820	750	650	570	500	430
		180	2860	1690	1600	1420	1290	1190	1040	900	780	660
		250	5840	3930	3720	3290	3010	2750	2400	2070	1770	1460
	240	025	2.89	2.37	2.24	1.99	1.82	1.69	1.48	1.29	1.13	0.98
		032	4.77	3.92	3.71	3.29	3.02	2.79	2.45	2.13	1.87	1.62
		040	30.6	23.2	22.0	19.5	17.9	16.5	14.5	12.6	11.0	9.6
		050	50.1	40.2	38.1	33.7	30.9	28.6	25.1	21.8	19.1	16.6
		063	85.1	67.8	64.2	56.8	52.1	48.2	42.3	36.7	32.2	27.9
		080	262	246	243	216	198	183	160	139	122	106
		110	738	536	507	449	412	381	334	290	254	220
		140	1640	1080	1030	910	830	770	680	590	510	440
		180	2860	1720	1630	1440	1320	1220	1070	930	810	690
		250	5840	4000	3780	3350	3070	2840	2480	2140	1850	1540
	270	025	2.89	2.40	2.27	2.01	1.85	1.73	1.51	1.32	1.16	1.00
		032	4.77	3.97	3.76	3.33	3.06	2.86	2.51	2.18	1.91	1.66
		040	30.6	23.5	22.3	19.7	18.1	16.9	14.8	12.9	11.3	9.8
		050	50.1	40.7	38.5	34.1	31.3	29.3	25.7	22.3	19.6	17.0
		063	85.1	68.6	65.0	57.5	52.8	49.3	43.2	37.6	32.9	28.6
		080	262	249	246	218	200	187	164	143	125	109
		110	738	542	514	455	417	390	342	297	260	225
		140	1640	1100	1040	920	840	790	690	600	530	450
		180	2860	1740	1650	1460	1340	1250	1100	950	830	710
		250	5840	4040	3830	3390	3110	2900	2540	2200	1900	1600

● RGIS straight shaft (3 dwell)

Cam curve/MS

Index number	Total index angle (deg)	Size	Static rated output torque (N·m)	Rated dynamic output torque (N·m)								
				Input shaft rotational speed (rpm)								
				10	20	30	40	50	70	100	140	200
24	300	025	2.89	2.43	2.30	2.03	1.87	1.75	1.54	1.34	1.18	1.02
		032	4.77	4.01	3.80	3.36	3.09	2.89	2.55	2.22	1.95	1.69
		040	30.6	23.7	22.5	19.9	18.2	17.1	15.1	13.1	11.5	10.0
		050	50.1	41.1	38.9	34.4	31.6	29.5	26.1	22.7	19.9	17.3
		063	85.1	69.2	65.5	58.0	53.2	49.8	44.1	38.3	33.6	29.1
		080	262	252	249	220	202	189	167	145	127	111
		110	738	547	518	459	421	394	348	303	265	230
		140	1640	1110	1050	930	850	800	700	610	540	460
		180	2860	1760	1660	1470	1350	1260	1120	970	850	730
		250	5840	4080	3860	3420	3140	2930	2590	2240	1950	1650
	330	025	2.89	2.44	2.31	2.05	1.88	1.76	1.57	1.37	1.20	1.04
		032	4.77	4.04	3.83	3.39	3.11	2.91	2.60	2.26	1.98	1.72
		040	30.6	23.9	22.6	20.0	18.4	17.2	15.3	13.3	11.7	10.2
		050	50.1	41.3	39.1	34.6	31.8	29.7	26.5	23.1	20.2	17.6
		063	85.1	69.7	66.0	58.4	53.6	50.1	44.7	38.9	34.1	29.6
		080	262	253	250	222	203	190	170	148	129	112
		110	738	551	522	462	424	396	354	308	269	234
		140	1640	1120	1060	940	860	800	720	620	540	470
		180	2860	1770	1680	1480	1360	1270	1140	990	860	740
		250	5840	4110	3890	3440	3160	2950	2630	2280	1980	1690
30	120	040	10.9	9.39	9.39	9.23	8.99	8.81	8.46	7.35	6.43	5.60
		050	22.8	19.7	19.7	19.4	18.8	17.9	15.7	13.6	11.9	10.2
		063	63.6	46.9	44.4	38.6	34.5	31.6	27.7	24.0	20.9	17.8
		080	152	90.4	85.6	74.5	66.5	61.0	53.4	46.2	40.1	34.1
		110	359	311	307	267	239	219	191	165	143	121
		140	760	483	458	398	355	325	284	244	208	169
		180	1490	1030	970	840	750	690	600	510	430	320
		250	4150	2640	2490	2160	1930	1760	1520	1270	1020	690
	150	025	1.49	1.18	1.11	0.99	0.88	0.81	0.71	0.62	0.54	0.47
		032	3.66	2.90	2.75	2.43	2.18	2.00	1.75	1.52	1.33	1.15
		040	10.9	9.85	9.85	9.85	9.63	9.43	9.06	7.88	6.90	5.98
		050	37.9	27.8	26.3	23.3	20.9	19.2	16.8	14.6	12.8	11.0
		063	85.1	65.4	61.9	54.8	49.1	45.0	39.4	34.3	29.9	25.8
		080	152	94.9	89.8	79.5	71.2	65.3	57.2	49.6	43.3	37.1
		110	359	326	322	285	255	234	205	178	155	132
		140	950	663	627	555	497	456	399	345	298	251
		180	2100	1340	1270	1120	1010	920	800	690	590	490
		250	4150	2760	2610	2310	2070	1890	1640	1400	1160	880
	180	025	2.13	1.73	1.64	1.45	1.32	1.21	1.06	0.93	0.81	0.70
		032	3.66	2.99	2.83	2.51	2.28	2.09	1.83	1.60	1.40	1.21
		040	10.9	10.1	10.1	10.1	10.1	9.9	9.5	8.2	7.2	6.3
		050	37.9	28.6	27.1	24.0	21.8	20.0	17.5	15.3	13.4	11.6
		063	85.1	67.2	63.7	56.4	51.4	47.1	41.3	35.9	31.4	27.1
		080	152	97.6	92.4	81.8	74.5	68.3	59.8	52.0	45.4	39.1
		110	359	335	331	293	267	245	214	186	162	140
		140	950	682	646	572	521	477	418	362	315	268
		180	2100	1380	1310	1160	1050	960	840	730	630	530
		250	4150	2840	2690	2380	2160	1980	1720	1480	1250	1000

Roller gear cam drive (standard housing)

Output torque table

Index series

● RGIS straight shaft (3 dwell)

Cam curve/MS

Index number	Total index angle (deg)	Size	Static rated output torque (N·m)	Rated dynamic output torque (N·m)								
				Input shaft rotational speed (rpm)								
				10	20	30	40	50	70	100	140	200
30	210	025	2.13	1.77	1.67	1.48	1.36	1.26	1.10	0.96	0.84	0.73
		032	3.66	3.05	2.88	2.55	2.34	2.16	1.90	1.65	1.44	1.25
		040	10.9	10.3	10.3	10.3	10.3	10.2	9.8	8.5	7.5	6.5
		050	37.9	29.1	27.5	24.4	22.4	20.6	18.1	15.7	13.8	12.0
		063	85.1	68.4	64.8	57.4	52.6	48.6	42.6	37.0	32.4	28.1
		080	164	156	156	148	136	125	110	96	84	72
		110	359	341	337	298	273	252	221	192	168	145
		140	950	695	657	582	534	493	432	374	326	280
		180	2100	1410	1330	1180	1080	1000	870	760	650	550
		250	4150	2890	2730	2420	2220	2040	1780	1540	1320	1080
	240	025	2.13	1.79	1.70	1.50	1.38	1.29	1.13	0.98	0.86	0.75
		032	3.66	3.08	2.92	2.58	2.37	2.22	1.94	1.69	1.48	1.29
		040	10.9	10.4	10.4	10.4	10.4	10.4	10.0	8.7	7.6	6.6
		050	37.9	29.4	27.9	24.7	22.6	21.1	18.5	16.1	14.1	12.3
		063	85.1	69.2	65.5	58.0	53.2	49.7	43.6	37.9	33.2	28.8
		080	164	158	158	150	137	128	113	98	86	74
		110	359	345	341	302	277	259	227	197	172	149
		140	950	703	666	589	540	505	442	384	335	288
		180	2100	1420	1350	1190	1090	1020	890	780	670	570
		250	5840	4080	3860	3420	3130	2930	2560	2210	1910	1610
	270	025	2.13	1.81	1.71	1.51	1.39	1.30	1.15	1.00	0.88	0.76
		032	3.66	3.11	2.94	2.61	2.39	2.24	1.98	1.72	1.51	1.31
		040	10.9	10.5	10.5	10.5	10.5	10.5	10.2	8.9	7.8	6.8
		050	37.9	29.7	28.1	24.9	22.8	21.3	18.9	16.4	14.4	12.5
		063	85.1	69.8	66.1	58.5	53.7	50.2	44.4	38.7	33.9	29.4
		080	164	159	159	151	139	130	115	100	87	76
		110	359	347	344	304	279	261	231	201	176	152
		140	950	709	671	594	545	510	451	392	342	295
		180	2100	1440	1360	1200	1100	1030	910	790	690	590
		250	5840	4110	3890	3450	3160	2950	2610	2260	1960	1660
	300	025	2.13	1.82	1.72	1.52	1.40	1.31	1.17	1.02	0.89	0.78
		032	3.66	3.13	2.96	2.62	2.41	2.25	2.01	1.75	1.53	1.33
		040	10.9	10.6	10.6	10.6	10.6	10.6	10.4	9.0	7.9	6.9
		050	37.9	29.8	28.2	25.0	22.9	21.5	19.2	16.7	14.6	12.7
		063	85.1	70.2	66.5	58.9	54.0	50.5	45.1	39.3	34.4	29.9
		080	164	160	160	152	139	130	117	101	89	77
		110	359	349	346	306	281	262	235	204	179	155
		140	950	713	675	598	549	513	458	398	348	301
		180	2100	1440	1370	1210	1110	1040	930	800	700	600
		250	5840	4140	3920	3470	3180	2970	2650	2300	2000	1700
	330	025	2.13	1.83	1.73	1.53	1.41	1.31	1.19	1.03	0.90	0.79
		032	3.66	3.14	2.98	2.64	2.42	2.26	2.04	1.77	1.56	1.35
		040	10.9	10.6	10.6	10.6	10.6	10.6	10.5	9.1	8.0	7.0
		050	37.9	30.0	28.4	25.1	23.0	21.5	19.4	16.9	14.8	12.9
		063	85.1	70.5	66.8	59.1	54.2	50.7	45.7	39.8	34.9	30.3
		080	164	161	161	153	140	131	118	103	90	78
		110	359	351	347	307	282	264	238	207	181	157
		140	950	717	679	601	551	515	465	404	353	306
		180	2100	1450	1370	1220	1120	1040	940	820	710	610
		250	5840	4160	3930	3480	3190	2990	2690	2330	2030	1740

RGIS straight shaft (3 dwell)

Cam curve/MS

Index number	Total index angle (deg)	Size	Static rated output torque (N·m)	Rated dynamic output torque (N·m)								
				Input shaft rotational speed (rpm)								
				10	20	30	40	50	70	100	140	200
36	90	040	7.19	6.13	5.80	4.96	4.43	4.06	3.56	3.09	2.69	2.30
		050	13.1	10.2	9.6	8.2	7.3	6.7	5.9	5.1	4.4	3.7
		063	16.4	14.1	14.1	13.6	13.2	13.0	12.4	10.7	9.1	7.5
		080	80.0	57.6	54.5	46.6	41.6	38.1	33.3	28.7	24.6	20.2
		110	200	119	112	96	86	78	68	58	49	38
		140	420	315	298	254	227	207	180	152	126	94
		180	976	603	570	486	432	393	337	278	213	122
		250	2020	1370	1290	1100	970	880	740	580	380	
	120	032	2.70	2.13	2.01	1.77	1.58	1.45	1.27	1.10	0.96	0.83
		040	10.2	8.87	8.40	7.37	6.59	6.04	5.29	4.60	4.02	3.47
		050	12.8	11.8	11.7	11.6	11.3	11.1	10.7	9.3	8.1	6.9
		063	25.3	22.8	22.8	22.6	22.0	21.5	20.8	20.1	18.3	15.6
		080	108	82.5	78.1	68.5	61.2	56.1	49.1	42.6	37.0	31.5
		110	225	203	203	191	170	156	136	118	102	86
		140	462	414	409	359	320	293	256	220	189	154
		180	1220	845	799	700	625	571	496	423	353	270
		250	3910	2260	2140	1880	1670	1520	1320	1100	890	610
	150	032	2.70	2.21	2.09	1.85	1.67	1.53	1.34	1.17	1.02	0.88
		040	10.2	9.14	8.66	7.66	6.93	6.35	5.57	4.84	4.24	3.67
		050	12.8	12.1	12.1	12.1	11.9	11.7	11.2	9.7	8.5	7.4
		063	63.6	50.5	47.8	42.4	38.3	35.1	30.7	26.7	23.3	20.1
		080	108	85.5	81.0	71.7	64.8	59.3	52.0	45.1	39.4	33.8
		110	225	210	210	199	180	165	144	125	109	93
		140	462	429	425	376	339	311	272	235	203	171
		180	1220	876	829	733	662	606	528	454	387	313
		250	3910	2340	2220	1960	1770	1620	1410	1200	1000	760
	180	032	2.70	2.25	2.13	1.89	1.73	1.59	1.39	1.21	1.06	0.92
		040	10.2	9.30	8.81	7.80	7.15	6.57	5.76	5.01	4.39	3.80
		050	12.8	12.3	12.3	12.3	12.3	12.1	11.6	10.1	8.8	7.6
		063	63.6	51.6	48.8	43.2	39.7	36.4	31.9	27.7	24.2	21.0
		080	108	87.3	82.6	73.2	67.1	61.6	54.0	46.9	41.0	35.4
		110	225	214	214	203	186	171	150	130	114	98
		140	760	534	505	447	410	376	329	286	248	211
		180	1490	1130	1070	950	870	800	700	600	520	430
		250	3910	2390	2260	2000	1830	1680	1460	1260	1070	850
	210	032	2.70	2.28	2.16	1.92	1.76	1.64	1.43	1.25	1.09	0.95
		040	10.2	9.40	8.90	7.88	7.23	6.73	5.90	5.13	4.50	3.90
		050	12.8	12.4	12.4	12.4	12.4	12.4	11.9	10.3	9.0	7.8
		063	63.6	52.2	49.5	43.8	40.2	37.4	32.8	28.5	24.9	21.6
		080	152	101	95	85	78	72	63	55	48	42
		110	331	284	269	238	218	203	178	155	135	117
		140	760	541	512	453	416	387	339	294	256	219
		180	1490	1150	1080	960	880	820	720	620	540	460
		250	4150	2930	2770	2450	2250	2090	1830	1580	1360	1120
	240	032	2.70	2.30	2.18	1.93	1.77	1.66	1.46	1.27	1.12	0.97
		040	10.2	9.47	8.96	7.94	7.28	6.81	6.01	5.23	4.59	3.98
		050	12.8	12.5	12.5	12.5	12.5	12.5	12.1	10.5	9.2	8.0
		063	63.6	52.7	49.9	44.2	40.5	37.9	33.5	29.1	25.5	22.1
		080	152	102	96	85	78	73	65	56	49	43
		110	331	286	271	240	220	206	182	158	138	119
		140	760	545	516	457	419	392	346	300	262	226
		180	1490	1160	1090	970	890	830	730	630	550	470
		250	4150	2950	2800	2480	2270	2120	1870	1610	1400	1170

Output torque table

● RGIS straight shaft (3 dwell)

Cam curve/MS

Index number	Total index angle (deg)	Size	Static rated output torque (N·m)	Rated dynamic output torque (N·m)								
				Input shaft rotational speed (rpm)								
				10	20	30	40	50	70	100	140	200
36	270	032	2.70	2.32	2.20	1.94	1.78	1.67	1.49	1.30	1.13	0.99
		040	10.2	9.51	9.01	7.97	7.31	6.84	6.11	5.31	4.66	4.05
		050	12.8	12.6	12.6	12.6	12.6	12.6	12.3	10.7	9.4	8.1
		063	63.6	53.0	50.2	44.4	40.7	38.1	34.0	29.6	25.9	22.5
		080	152	102	97	86	79	74	66	57	50	43
		110	331	288	273	241	221	207	185	161	141	122
		140	760	549	520	460	422	394	352	306	267	230
		180	1490	1160	1100	970	890	840	750	650	560	480
		250	4150	2970	2810	2490	2280	2130	1900	1650	1430	1210
	300	032	2.70	2.33	2.21	1.95	1.79	1.68	1.51	1.31	1.15	1.00
		040	10.2	9.55	9.04	8.00	7.34	6.87	6.19	5.38	4.72	4.10
		050	12.8	12.6	12.6	12.6	12.6	12.6	12.4	10.8	9.5	8.2
		063	63.6	53.2	50.4	44.6	40.9	38.3	34.5	30.0	26.3	22.8
		080	152	103	97	86	79	74	67	58	51	44
		110	331	289	274	242	222	208	187	163	143	124
		140	760	551	522	462	424	396	357	310	271	234
		180	1490	1170	1110	980	900	840	760	660	570	490
		250	4150	2980	2820	2500	2290	2140	1930	1670	1450	1240
	330	032	2.70	2.34	2.21	1.96	1.80	1.68	1.52	1.33	1.17	1.01
		040	10.2	9.57	9.06	8.02	7.36	6.88	6.22	5.44	4.77	4.15
		050	12.8	12.6	12.6	12.6	12.6	12.6	12.5	10.9	9.6	8.3
		063	63.6	53.4	50.5	44.7	41.0	38.4	34.7	30.4	26.6	23.1
		080	152	103	98	86	79	74	67	59	51	45
		110	331	290	275	243	223	209	189	165	144	125
		140	760	553	524	464	425	398	359	314	275	238
		180	1490	1170	1110	980	900	840	760	660	580	500
		250	4150	2990	2830	2510	2300	2150	1940	1690	1470	1260
48	90	080	31.8	28.7	28.7	28.1	27.3	26.8	25.9	24.9	22.4	18.7
		110	143	110	104	90	81	74	64	55	47	38
		140	285	257	257	239	213	195	169	144	121	93
		180	591	531	524	453	403	367	317	264	209	135
		250	1630	1150	1080	930	830	750	630	500	350	
	120	080	31.8	30.0	30.0	30.0	29.3	28.7	27.8	26.8	24.4	20.7
		110	143	115	108	96	86	79	69	60	51	43
		140	285	269	268	255	228	209	182	157	135	110
		180	591	555	548	485	434	397	345	293	245	186
		250	2020	1520	1440	1270	1140	1040	900	750	600	410
	150	080	31.8	30.6	30.6	30.6	30.5	29.9	29.0	28.0	25.5	21.9
		110	143	117	110	98	90	82	72	62	54	46
		140	285	274	274	260	238	218	191	165	143	120
		180	591	567	560	496	453	415	362	311	264	213
		250	2020	1550	1470	1300	1190	1080	940	800	670	510
	180	080	80.0	66.3	62.8	55.6	51.0	47.4	41.6	36.1	31.5	27.2
		110	143	118	112	99	91	84	74	64	56	48
		140	285	277	277	263	241	224	196	170	148	126
		180	591	574	567	502	460	427	373	322	277	229
		250	2020	1570	1490	1310	1200	1120	970	830	710	560
	210	080	80.0	66.8	63.2	56.0	51.4	48.0	42.4	36.9	32.3	27.9
		110	200	136	128	114	104	97	86	75	65	56
		140	285	279	279	265	243	227	201	174	152	130
		180	591	578	572	506	464	433	382	330	286	240
		250	2020	1580	1500	1320	1210	1130	1000	860	730	600

● RGIS straight shaft (3 dwell)

Cam curve/MS

Index number	Total index angle (deg)	Size	Static rated output torque (N·m)	Rated dynamic output torque (N·m)								
				Input shaft rotational speed (rpm)								
				10	20	30	40	50	70	100	140	200
48	240	080	80.0	67.1	63.5	56.3	51.6	48.2	43.2	37.5	32.9	28.5
		110	200	136	129	114	105	98	88	76	66	57
		140	285	281	281	266	244	228	204	177	155	133
		180	591	581	575	509	466	436	389	337	292	248
		250	2020	1590	1500	1330	1220	1140	1020	880	750	630
	270	080	80.0	67.3	63.7	56.4	51.8	48.4	43.7	38.1	33.3	28.9
		110	200	137	129	114	105	98	89	77	67	58
		140	285	282	282	267	245	229	207	180	157	135
		180	976	712	674	596	547	511	462	401	349	298
		250	2020	1590	1510	1330	1220	1140	1030	890	770	650
	300	080	80.0	67.5	63.9	56.6	51.9	48.5	43.9	38.5	33.8	29.3
		110	200	137	130	115	105	98	89	78	68	59
		140	285	282	282	268	246	230	208	182	159	138
		180	976	714	676	598	548	513	463	406	354	303
		250	2020	1600	1510	1340	1230	1150	1030	900	780	660
	330	080	80.0	67.6	64.0	56.7	52.0	48.6	43.9	38.9	34.1	29.6
		110	200	137	130	115	105	99	89	79	69	60
		140	285	283	283	268	246	230	208	184	161	139
		180	976	715	677	599	549	514	464	410	358	308
		250	2020	1600	1510	1340	1230	1150	1040	910	800	680

Roller gear cam drive (standard housing)

Output torque table

Index series

● RGIS straight shaft (4 dwell)

Cam curve/MS

Index number	Total index angle (deg)	Size	Static rated output torque (N·m)	Rated dynamic output torque (N·m)								
				Input shaft rotational speed (rpm)								
				10	15	20	30	40	50	75	100	150
32	180	025	1.49	1.17	1.10	1.01	0.89	0.80	0.73	0.62	0.56	0.47
		032	2.70	2.13	2.01	1.85	1.63	1.46	1.33	1.14	1.01	0.86
		040	10.9	9.78	9.78	9.78	9.74	9.49	9.30	7.98	7.12	6.07
		050	50.1	38.5	36.5	33.5	29.5	26.4	24.2	20.6	18.4	15.7
		063	85.1	64.9	61.4	56.4	49.7	44.4	40.7	34.7	31.0	26.3
		080	164	148	148	145	128	115	105	90	80	68
		110	591	393	372	342	301	269	247	210	187	158
		140	1160	832	787	722	637	569	521	443	394	330
		180	2860	1640	1560	1430	1260	1120	1030	870	770	640
		250	5840	3830	3630	3320	2930	2610	2390	2020	1770	1410
	210	025	2.89	2.33	2.20	2.02	1.79	1.61	1.48	1.26	1.13	0.96
		032	4.77	3.85	3.65	3.35	2.96	2.67	2.45	2.09	1.87	1.59
		040	30.6	22.8	21.6	19.8	17.5	15.8	14.5	12.4	11.1	9.4
		050	50.1	39.5	37.4	34.3	30.4	27.4	25.2	21.5	19.2	16.3
		063	85.1	66.6	63.0	57.8	51.2	46.2	42.4	36.1	32.3	27.4
		080	242	199	188	172	153	138	126	108	96	82
		110	738	527	499	457	405	365	335	286	255	216
		140	1640	1060	1010	920	820	740	680	580	510	430
		180	2860	1690	1600	1470	1300	1170	1070	910	810	670
		250	5840	3930	3720	3410	3020	2720	2490	2110	1860	1520
	240	025	2.89	2.37	2.24	2.06	1.82	1.67	1.53	1.30	1.16	0.99
		032	4.77	3.92	3.71	3.41	3.02	2.76	2.53	2.16	1.93	1.64
		040	30.6	23.2	22.0	20.2	17.9	16.3	15.0	12.8	11.4	9.7
		050	50.1	40.2	38.1	34.9	30.9	28.3	25.9	22.1	19.7	16.8
		063	85.1	67.8	64.2	58.9	52.1	47.6	43.6	37.2	33.3	28.3
		080	262	246	243	223	198	181	166	141	126	107
		110	738	536	507	465	412	376	345	294	263	223
		140	1640	1080	1030	940	830	760	700	590	530	450
		180	2860	1720	1630	1490	1320	1210	1110	940	840	700
		250	5840	4000	3780	3470	3070	2800	2570	2180	1930	1590
	270	025	2.89	2.40	2.27	2.09	1.85	1.69	1.56	1.34	1.19	1.02
		032	4.77	3.97	3.76	3.45	3.06	2.80	2.59	2.21	1.97	1.68
		040	30.6	23.5	22.3	20.4	18.1	16.6	15.3	13.1	11.7	10.0
		050	50.1	40.7	38.5	35.3	31.3	28.7	26.5	22.6	20.2	17.2
		063	85.1	68.6	65.0	59.6	52.8	48.4	44.7	38.1	34.0	29.0
		080	262	249	246	226	200	184	169	145	129	110
		110	738	542	514	471	417	383	353	301	269	229
		140	1640	1100	1040	950	840	770	710	610	540	460
		180	2860	1740	1650	1510	1340	1230	1130	960	860	720
		250	5840	4040	3830	3510	3110	2850	2630	2230	1980	1650
	300	025	2.89	2.43	2.30	2.11	1.87	1.71	1.59	1.36	1.22	1.04
		032	4.77	4.01	3.80	3.49	3.09	2.83	2.64	2.25	2.01	1.72
		040	30.6	23.7	22.5	20.6	18.2	16.7	15.6	13.3	11.9	10.2
		050	50.1	41.1	38.9	35.7	31.6	29.0	27.0	23.0	20.6	17.5
		063	85.1	69.2	65.5	60.1	53.2	48.8	45.5	38.8	34.7	29.6
		080	262	252	249	228	202	185	173	147	132	112
		110	738	547	518	475	421	386	360	307	274	233
		140	1640	1110	1050	960	850	780	730	620	550	470
		180	2860	1760	1660	1530	1350	1240	1150	980	880	740
		250	5840	4080	3860	3540	3140	2870	2680	2280	2020	1690

● RGIS straight shaft (4 dwell)

Cam curve/MS

Index number	Total index angle (deg)	Size	Static rated output torque (N·m)	Rated dynamic output torque (N·m)								
				Input shaft rotational speed (rpm)								
				10	15	20	30	40	50	75	100	150
32	330	025	2.89	2.44	2.31	2.12	1.88	1.72	1.61	1.38	1.24	1.05
		032	4.77	4.04	3.83	3.51	3.11	2.85	2.67	2.29	2.04	1.74
		040	30.6	23.9	22.6	20.7	18.4	16.9	15.8	13.5	12.1	10.3
		050	50.1	41.3	39.1	35.9	31.8	29.2	27.3	23.4	20.9	17.8
		063	85.1	69.7	66.0	60.5	53.6	49.2	46.0	39.4	35.2	30.0
		080	262	253	250	230	203	187	174	150	134	114
		110	738	551	522	479	424	389	363	312	278	237
		140	1640	1120	1060	970	860	790	740	630	560	480
		180	2860	1770	1680	1540	1360	1250	1170	1000	890	750
		250	5840	4110	3890	3570	3160	2890	2700	2310	2060	1730
36	150	032	2.70	2.10	1.99	1.82	1.59	1.42	1.30	1.11	0.99	0.84
		040	10.9	9.65	9.65	9.65	9.51	9.27	9.08	7.78	6.95	5.92
		050	37.9	27.3	25.8	23.7	20.7	18.5	16.9	14.4	12.9	10.9
		063	63.6	48.2	45.6	41.8	36.5	32.6	29.9	25.4	22.7	19.1
		080	152	92.9	88.0	80.7	70.4	62.9	57.6	49.1	43.7	36.8
		110	359	319	315	289	252	225	207	176	156	131
		140	760	497	471	432	376	336	307	261	231	190
		180	2100	1310	1240	1140	990	890	810	690	600	490
		250	4150	2710	2560	2350	2040	1820	1660	1390	1200	910
	180	025	2.13	1.71	1.62	1.48	1.31	1.17	1.08	0.92	0.82	0.70
		032	4.77	3.83	3.63	3.33	2.94	2.64	2.42	2.06	1.84	1.57
		040	30.6	22.7	21.5	19.7	17.4	15.6	14.3	12.2	10.9	9.3
		050	51.5	39.3	37.2	34.1	30.2	27.1	24.8	21.2	18.9	16.1
		063	85.1	66.2	62.7	57.5	50.9	45.6	41.8	35.6	31.8	27.0
		080	164	151	151	148	131	118	108	92	82	70
		110	591	401	380	348	309	276	253	216	192	162
		140	1160	849	804	737	653	584	535	455	405	340
		180	2860	1680	1590	1460	1290	1150	1060	900	790	660
		250	5840	3910	3700	3390	3000	2680	2450	2070	1820	1460
	210	025	2.13	1.75	1.65	1.52	1.34	1.22	1.12	0.95	0.85	0.73
		032	4.77	3.92	3.71	3.40	3.01	2.73	2.51	2.14	1.91	1.63
		040	30.6	23.2	21.9	20.1	17.8	16.2	14.8	12.7	11.3	9.6
		050	51.5	40.1	38.0	34.9	30.9	28.0	25.7	21.9	19.6	16.7
		063	85.1	67.6	64.0	58.7	52.0	47.2	43.3	36.9	33.0	28.0
		080	164	154	154	152	134	122	112	95	85	72
		110	591	410	388	356	315	286	262	223	199	169
		140	1160	868	822	754	667	606	555	473	421	355
		180	2860	1720	1630	1490	1320	1200	1100	930	830	690
		250	5840	3990	3780	3460	3060	2780	2540	2150	1900	1560
	240	025	2.13	1.77	1.68	1.54	1.36	1.25	1.15	0.98	0.88	0.75
		032	4.77	3.97	3.76	3.45	3.06	2.80	2.57	2.20	1.96	1.67
		040	30.6	23.5	22.3	20.4	18.1	16.6	15.2	13.0	11.6	9.9
		050	51.5	40.7	38.5	35.3	31.3	28.7	26.4	22.5	20.1	17.1
		063	85.1	68.6	65.0	59.6	52.8	48.4	44.4	37.9	33.9	28.8
		080	164	156	156	154	136	125	115	98	87	74
		110	591	416	394	361	320	293	269	229	205	174
		140	1160	881	834	765	677	621	570	486	433	367
		180	2860	1740	1650	1510	1340	1230	1130	960	850	720
		250	5840	4040	3830	3510	3110	2850	2610	2220	1960	1630

Roller gear cam drive (standard housing)

Output torque table

Index series

● RGIS straight shaft (4 dwell)

Cam curve/MS

Index number	Total index angle (deg)	Size	Static rated output torque (N·m)	Rated dynamic output torque (N·m)								
				Input shaft rotational speed (rpm)								
				10	15	20	30	40	50	75	100	150
36	270	025	2.13	1.79	1.70	1.56	1.38	1.26	1.17	1.00	0.89	0.76
		032	4.77	4.02	3.80	3.49	3.09	2.83	2.63	2.24	2.01	1.71
		040	30.6	23.7	22.5	20.6	18.3	16.8	15.5	13.3	11.9	10.1
		050	51.5	41.1	38.9	35.7	31.6	29.0	26.9	23.0	20.5	17.5
		063	85.1	69.3	65.6	60.2	53.3	48.9	45.4	38.7	34.6	29.4
		080	164	158	158	155	138	126	117	100	89	76
		110	591	420	397	365	323	296	275	234	209	178
		140	1160	890	843	773	684	628	582	496	443	376
		180	2860	1760	1670	1530	1350	1240	1150	980	870	740
		250	5840	4080	3870	3550	3140	2880	2670	2270	2010	1680
	300	025	2.13	1.81	1.71	1.57	1.39	1.27	1.19	1.02	0.91	0.78
		032	4.77	4.05	3.83	3.52	3.11	2.86	2.67	2.28	2.04	1.74
		040	30.6	23.9	22.7	20.8	18.4	16.9	15.8	13.5	12.1	10.3
		050	51.5	41.4	39.2	35.9	31.8	29.2	27.3	23.3	20.9	17.8
		063	85.1	69.8	66.1	60.6	53.7	49.2	46.0	39.4	35.2	30.0
		080	164	159	159	156	139	127	119	102	91	77
		110	591	423	400	367	325	298	279	238	213	181
		140	1160	897	849	779	690	632	591	505	451	383
		180	2860	1770	1680	1540	1360	1250	1170	1000	890	750
		250	5840	4110	3890	3570	3160	2900	2710	2310	2050	1720
	330	025	2.13	1.82	1.72	1.58	1.40	1.28	1.20	1.03	0.92	0.79
		032	4.77	4.07	3.85	3.54	3.13	2.87	2.69	2.32	2.07	1.77
		040	30.6	24.1	22.8	20.9	18.5	17.0	15.9	13.7	12.2	10.4
		050	51.5	41.6	39.4	36.1	32.0	29.3	27.4	23.7	21.2	18.0
		063	85.1	70.2	66.5	61.0	54.0	49.5	46.3	39.9	35.7	30.4
		080	164	160	160	157	139	128	119	103	92	78
		110	591	425	402	369	327	300	280	242	216	184
		140	1160	902	854	783	693	636	595	513	458	389
		180	2860	1780	1690	1550	1370	1260	1180	1010	900	760
		250	5840	4140	3910	3590	3180	2910	2720	2340	2080	1750
40	150	025	1.49	1.18	1.11	1.02	0.90	0.80	0.73	0.63	0.56	0.47
		032	2.70	2.14	2.03	1.86	1.63	1.46	1.34	1.14	1.02	0.86
		040	10.9	9.85	9.85	9.85	9.75	9.50	9.31	7.98	7.13	6.07
		050	37.9	27.8	26.3	24.2	21.2	18.9	17.3	14.8	13.2	11.2
		063	63.6	49.2	46.5	42.7	37.4	33.4	30.6	26.1	23.3	19.7
		080	152	94.9	89.8	82.4	72.2	64.5	59.1	50.3	44.8	37.8
		110	359	326	322	295	259	231	212	180	160	135
		140	950	663	627	575	504	450	412	350	311	258
		180	2100	1340	1270	1160	1020	910	830	700	620	510
		250	4150	2760	2610	2400	2100	1870	1700	1430	1240	950
	180	025	2.13	1.73	1.64	1.51	1.33	1.20	1.10	0.94	0.84	0.71
		032	3.66	2.99	2.83	2.60	2.30	2.07	1.89	1.62	1.44	1.23
		040	10.9	10.1	10.1	10.1	10.1	9.9	9.7	8.3	7.5	6.4
		050	37.9	28.6	27.1	24.8	22.0	19.8	18.1	15.5	13.8	11.7
		063	85.1	67.2	63.7	58.4	51.7	46.5	42.6	36.3	32.4	27.5
		080	164	153	153	151	133	120	110	94	84	71
		110	359	335	331	304	269	242	221	189	168	142
		140	950	682	646	592	524	471	432	367	327	274
		180	2100	1380	1310	1200	1060	950	870	740	660	540
		250	4150	2840	2690	2460	2180	1950	1790	1510	1320	1060

● RGIS straight shaft (4 dwell)

Cam curve/MS

Index number	Total index angle (deg)	Size	Static rated output torque (N·m)	Rated dynamic output torque (N·m)								
				Input shaft rotational speed (rpm)								
				10	15	20	30	40	50	75	100	150
40	210	025	2.13	1.77	1.67	1.54	1.36	1.24	1.14	0.97	0.87	0.74
		032	3.66	3.05	2.88	2.64	2.34	2.14	1.96	1.67	1.49	1.27
		040	10.9	10.3	10.3	10.3	10.3	10.3	10.1	8.6	7.7	6.6
		050	37.9	29.1	27.5	25.3	22.4	20.4	18.7	16.0	14.2	12.1
		063	85.1	68.4	64.8	59.4	52.6	48.0	44.0	37.5	33.5	28.5
		080	164	156	156	153	136	124	113	97	86	74
		110	359	341	337	309	273	249	229	195	174	147
		140	950	695	658	603	534	487	446	380	338	285
		180	2100	1410	1330	1220	1080	980	900	770	680	570
		250	5840	4030	3820	3500	3100	2820	2580	2190	1940	1590
	240	025	2.13	1.79	1.70	1.56	1.38	1.26	1.17	0.99	0.89	0.76
		032	3.66	3.08	2.92	2.68	2.37	2.17	2.01	1.71	1.53	1.30
		040	10.9	10.4	10.4	10.4	10.4	10.4	10.3	8.8	7.9	6.7
		050	37.9	29.4	27.9	25.6	22.6	20.8	19.1	16.3	14.6	12.4
		063	85.1	69.2	65.5	60.1	53.2	48.8	45.0	38.4	34.3	29.2
		080	164	158	158	155	137	126	116	99	89	75
		110	359	345	341	313	277	254	234	200	178	151
		140	950	703	666	611	540	496	457	390	347	294
		180	2100	1420	1350	1240	1090	1000	920	790	700	590
		250	5840	4080	3860	3540	3140	2870	2650	2250	1990	1660
	270	025	2.13	1.81	1.71	1.57	1.39	1.27	1.19	1.01	0.91	0.77
		032	4.77	4.05	3.83	3.52	3.11	2.86	2.66	2.27	2.03	1.70
		040	10.9	10.5	10.5	10.5	10.5	10.5	10.5	9.0	8.0	6.9
		050	37.9	29.7	28.1	25.8	22.8	20.9	19.5	16.6	14.9	12.7
		063	85.1	69.8	66.1	60.6	53.7	49.2	45.9	39.2	35.0	29.8
		080	164	159	159	156	139	127	118	101	90	77
		110	359	347	344	315	279	256	239	203	182	155
		140	950	709	671	616	545	500	466	397	354	300
		180	2100	1430	1360	1250	1100	1010	940	800	710	600
		250	5840	4110	3890	3570	3160	2900	2700	2290	2040	1700
	300	025	2.13	1.82	1.72	1.58	1.40	1.28	1.20	1.03	0.92	0.79
		032	4.77	4.07	3.86	3.54	3.13	2.87	2.69	2.31	2.06	1.80
		040	10.9	10.6	10.6	10.6	10.6	10.6	10.6	9.1	8.2	7.0
		050	37.9	29.8	28.2	25.9	22.9	21.0	19.7	16.9	15.1	12.9
		063	85.1	70.2	66.5	61.0	54.0	49.5	46.3	39.8	35.5	30.3
		080	164	160	160	157	139	128	120	103	92	78
		110	359	349	346	317	281	257	241	207	185	157
		140	950	713	675	620	549	503	470	404	360	306
		180	2100	1440	1370	1250	1110	1020	950	820	730	610
		250	5840	4140	3920	3590	3180	2920	2720	2330	2080	1740
	330	025	2.13	1.83	1.73	1.59	1.41	1.29	1.21	1.04	0.93	0.80
		032	4.77	4.09	3.88	3.55	3.15	2.89	2.70	2.34	2.09	1.80
		040	10.9	10.6	10.6	10.6	10.6	10.6	10.6	9.3	8.3	7.1
		050	37.9	30.0	28.4	26.0	23.0	21.1	19.8	17.1	15.3	13.1
		063	85.1	70.5	66.8	61.3	54.2	49.8	46.5	40.3	36.0	30.7
		080	164	161	161	158	140	128	120	104	93	79
		110	359	351	347	318	282	259	242	209	187	159
		140	950	717	679	622	551	505	473	409	365	310
		180	2100	1450	1370	1260	1120	1020	960	830	740	620
		250	5840	4160	3930	3610	3190	2930	2740	2370	2110	1770

Roller gear cam drive (standard housing)

Output torque table

Index series

● RGIS straight shaft (4 dwell)

Cam curve/MS

Index number	Total index angle (deg)	Size	Static rated output torque (N·m)	Rated dynamic output torque (N·m)								
				Input shaft rotational speed (rpm)								
				10	15	20	30	40	50	75	100	150
48	120	032	1.89	1.49	1.41	1.29	1.12	1.00	0.91	0.78	0.69	0.58
		040	10.2	8.87	8.40	7.70	6.67	5.96	5.47	4.66	4.16	3.53
		050	12.8	11.8	11.7	11.7	11.5	11.2	11.0	9.4	8.4	7.1
		063	25.3	22.8	22.8	22.8	22.3	21.7	21.2	20.4	19.0	16.0
		080	80.0	61.6	58.3	53.5	46.3	41.4	37.9	32.2	28.6	23.9
		110	225	203	203	199	173	154	141	120	106	88
		140	462	414	409	375	325	290	265	224	198	161
		180	1220	844	799	733	634	565	515	432	376	291
		250	3910	2260	2140	1960	1700	1510	1370	1140	970	690
	150	032	2.70	2.21	2.09	1.92	1.69	1.51	1.39	1.18	1.06	0.90
		040	10.2	9.14	8.66	7.94	7.02	6.27	5.75	4.90	4.38	3.73
		050	12.8	12.1	12.1	12.1	12.1	11.8	11.5	9.9	8.8	7.5
		063	63.6	50.5	47.8	43.9	38.8	34.7	31.8	27.1	24.1	20.4
		080	108	85.5	81.0	74.3	65.6	58.6	53.7	45.8	40.8	34.5
		110	225	210	210	206	182	163	149	127	113	95
		140	462	429	425	389	344	307	281	239	212	176
		180	1220	876	829	760	671	599	547	463	407	328
		250	3910	2340	2220	2030	1790	1600	1460	1220	1060	820
	180	032	2.70	2.25	2.13	1.96	1.73	1.57	1.44	1.23	1.10	0.93
		040	10.2	9.30	8.81	8.08	7.15	6.49	5.94	5.07	4.53	3.86
		050	12.8	12.3	12.3	12.3	12.3	12.2	11.9	10.2	9.1	7.7
		063	63.6	51.6	48.8	44.8	39.7	36.0	33.0	28.1	25.1	21.3
		080	108	87.3	82.6	75.8	67.1	60.9	55.8	47.5	42.4	36.0
		110	331	280	266	244	216	195	179	153	136	115
		140	760	534	505	463	410	372	341	290	258	216
		180	1490	1130	1070	980	870	790	720	610	540	450
		250	3910	2390	2260	2070	1830	1660	1520	1280	1120	900
	210	032	2.70	2.28	2.16	1.98	1.76	1.61	1.48	1.26	1.13	0.96
		040	10.2	9.40	8.90	8.16	7.23	6.63	6.09	5.20	4.65	3.96
		050	12.8	12.4	12.4	12.4	12.4	12.4	12.2	10.5	9.3	8.0
		063	63.6	52.2	49.5	45.4	40.2	36.8	33.8	28.9	25.8	21.9
		080	152	101	95	88	78	71	65	56	50	42
		110	331	284	269	247	218	200	184	157	140	119
		140	760	541	512	470	416	381	350	298	266	224
		180	1490	1150	1080	1000	880	810	740	630	560	470
		250	4150	2930	2770	2540	2250	2060	1890	1600	1420	1160
	240	032	2.70	2.30	2.18	2.00	1.77	1.63	1.51	1.29	1.15	0.98
		040	10.2	9.47	8.96	8.22	7.28	6.68	6.21	5.30	4.74	4.04
		050	12.8	12.5	12.5	12.5	12.5	12.5	12.4	10.7	9.5	8.1
		063	63.6	52.7	49.9	45.7	40.5	37.2	34.6	29.5	26.3	22.4
		080	152	102	96	88	78	72	67	57	51	43
		110	331	286	271	249	220	202	188	160	143	121
		140	760	545	516	474	419	385	358	305	272	230
		180	1490	1160	1090	1000	890	810	760	640	570	480
		250	4150	2950	2800	2560	2270	2080	1930	1640	1450	1210
	270	032	2.70	2.32	2.20	2.01	1.78	1.64	1.53	1.31	1.17	1.00
		040	10.2	9.51	9.01	8.26	7.31	6.71	6.28	5.38	4.81	4.10
		050	12.8	12.6	12.6	12.6	12.6	12.6	12.6	10.8	9.7	8.2
		063	63.6	53.0	50.2	46.0	40.7	37.4	34.9	30.0	26.8	22.8
		080	152	102	97	89	79	72	67	58	52	44
		110	331	288	273	250	221	203	190	163	145	124
		140	760	549	520	477	422	387	362	310	276	234
		180	1490	1160	1100	1010	890	820	770	660	580	490
		250	4150	2970	2810	2580	2280	2090	1960	1670	1480	1240

● RGIS straight shaft (4 dwell)

Cam curve/MS

Index number	Total index angle (deg)	Size	Static rated output torque (N·m)	Rated dynamic output torque (N·m)								
				Input shaft rotational speed (rpm)								
				10	15	20	30	40	50	75	100	150
48	300	032	2.70	2.33	2.21	2.02	1.79	1.64	1.54	1.33	1.19	1.01
		040	10.2	9.55	9.04	8.29	7.34	6.73	6.30	5.45	4.87	4.16
		050	12.8	12.6	12.6	12.6	12.6	12.6	12.6	11.0	9.8	8.4
		063	63.6	53.2	50.4	46.2	40.9	37.5	35.1	30.4	27.2	23.1
		080	152	103	97	89	79	72	68	59	52	45
		110	331	289	274	251	222	204	191	165	147	126
		140	760	551	522	479	424	389	363	314	281	238
		180	1490	1170	1110	1010	900	820	770	670	590	500
		250	4150	2980	2820	2590	2290	2100	1960	1700	1510	1260
	330	032	2.70	2.34	2.21	2.03	1.80	1.65	1.54	1.35	1.20	1.03
		040	10.2	9.57	9.06	8.31	7.36	6.75	6.31	5.52	4.93	4.21
		050	12.8	12.6	12.6	12.6	12.6	12.6	12.6	11.1	9.9	8.4
		063	63.6	53.4	50.5	46.4	41.0	37.6	35.2	30.8	27.5	23.4
		080	152	103	98	90	79	73	68	59	53	45
		110	331	290	275	252	223	205	191	167	149	127
		140	760	553	524	480	425	390	365	318	284	241
		180	1490	1170	1110	1020	900	830	770	670	600	510
		250	4150	2990	2830	2600	2300	2110	1970	1720	1530	1290

Output torque table

● RGIS flange shaft (1 dwell)

Cam curve/MS

Index number	Total index angle (deg)	Size	Static rated output torque (N·m)	Rated dynamic output torque (N·m)								
				Input shaft rotational speed (rpm)								
				30	60	90	120	150	200	300	400	600
2	150	025	1.09	0.56	0.49	0.42	0.38	0.34	0.30	0.25		
		032	1.99	1.02	0.90	0.77	0.68	0.62	0.55			
	180	025	1.09	0.63	0.56	0.48	0.43	0.39	0.35	0.29	0.25	
		032	2.69	1.56	1.39	1.19	1.06	0.97	0.86	0.73		
	210	025	1.09	0.69	0.62	0.53	0.47	0.43	0.38	0.32	0.28	
		032	2.69	1.70	1.53	1.30	1.16	1.07	0.95	0.80	0.71	
	240	025	1.09	0.73	0.66	0.57	0.51	0.46	0.41	0.35	0.31	
		032	2.69	1.81	1.64	1.40	1.25	1.15	1.02	0.87	0.77	
	270	025	1.09	0.76	0.70	0.60	0.53	0.49	0.44	0.37	0.33	
		032	2.69	1.89	1.74	1.48	1.33	1.21	1.08	0.92	0.82	
		040	10.9	6.64	6.44	6.19	6.02	5.88	5.68	4.73	4.02	2.86
		050	19.9	12.3	12.0	11.5	11.2	10.9	10.6	10.0	9.1	6.9
		063	85.1	44.2	40.6	34.6	30.9	28.2	25.0	20.9	18.0	13.4
		080	164	100	97	89	79	73	64	54	46	35
		110	359	220	211	180	160	146	129	105	87	
		140	950	443	407	346	307	279	244	192	149	
		180	2860	1110	1020	860	760	690	590	450		
		250	5840	2620	2390	2020	1760	1570	1290			
	300	025	2.13	1.19	1.10	0.94	0.84	0.77	0.68	0.57	0.50	
		032	4.77	2.69	2.49	2.13	1.90	1.74	1.55	1.31	1.15	
		040	30.6	16.1	14.9	12.7	11.4	10.4	9.2	7.8	6.8	5.3
		050	50.1	28.1	26.1	22.2	19.9	18.2	16.2	13.6	11.9	9.5
		063	85.1	47.0	43.6	37.2	33.2	30.4	27.0	22.7	19.7	15.2
		080	242	140	130	111	99	90	81	68	59	46
		110	591	286	265	226	201	184	163	135	114	81
		140	1160	598	554	472	420	383	338	275	227	
		180	3030	1430	1330	1130	1000	910	800	630		
		250	10400	3250	3010	2540	2240	2010	1700			
	330	025	2.13	1.25	1.17	1.00	0.89	0.82	0.73	0.61	0.54	
		032	4.77	2.83	2.65	2.26	2.02	1.85	1.65	1.40	1.24	
		040	30.6	17.0	15.9	13.5	12.1	11.1	9.9	8.3	7.3	5.8
		050	50.1	29.6	27.7	23.6	21.1	19.3	17.2	14.6	12.8	10.4
		063	119	56.6	52.9	45.1	40.3	36.9	32.9	27.7	24.3	19.4
		080	242	148	138	118	105	96	86	72	64	51
		110	591	301	281	240	214	196	174	145	124	92
		140	1160	631	590	503	448	409	362	298	250	
		180	3030	1510	1410	1200	1070	970	850	690	550	
		250	10400	3430	3200	2710	2400	2160	1850	1370		
3	120	025	1.09	0.62	0.55	0.47	0.42	0.38	0.34	0.28	0.24	
		032	2.69	1.54	1.37	1.16	1.04	0.95	0.84	0.70		
	150	025	1.09	0.71	0.63	0.54	0.48	0.44	0.39	0.33	0.29	
		032	2.69	1.75	1.56	1.33	1.19	1.09	0.97	0.82	0.71	
	180	025	1.09	0.76	0.69	0.59	0.52	0.48	0.43	0.36	0.32	
		032	2.69	1.89	1.71	1.46	1.30	1.19	1.06	0.90	0.79	
		040	10.9	6.64	6.32	6.07	5.89	5.74	5.53	4.52	3.74	2.32
		050	19.9	12.3	11.7	11.3	11.0	10.7	10.3	9.7	8.6	6.1
		063	85.1	44.1	39.8	33.9	30.2	27.6	24.4	20.1	16.9	11.5
		080	164	100	96	87	78	71	63	52	44	30
		110	359	220	207	176	157	142	125	99	78	
		140	950	443	399	338	300	271	233	175	123	
		180	2860	1110	1000	840	740	660	560	390		
		250	5840	2620	2340	1960	1690	1470	1160			

● RGIS flange shaft (1 dwell)

Cam curve/MS

Index number	Total index angle (deg)	Size	Static rated output torque (N·m)	Rated dynamic output torque (N·m)								
				Input shaft rotational speed (rpm)								
				30	60	90	120	150	200	300	400	600
3	210	025	2.13	1.22	1.12	0.95	0.85	0.78	0.69	0.58	0.50	
		032	4.77	2.76	2.53	2.16	1.93	1.76	1.57	1.32	1.16	
		040	10.9	7.27	7.02	6.76	6.56	6.41	6.19	5.15	4.38	3.10
		050	50.1	28.9	26.4	22.5	20.1	18.4	16.4	13.7	11.9	9.2
		063	85.1	48.3	44.2	37.7	33.6	30.7	27.3	22.8	19.6	14.6
		080	242	144	132	112	100	92	81	68	59	45
		110	591	293	268	228	203	186	164	134	112	72
		140	1160	615	562	478	425	387	339	271	217	
		180	2860	1220	1110	940	830	750	650	490		
		250	5840	2860	2610	2190	1920	1700	1400			
	240	025	2.13	1.31	1.22	1.04	0.93	0.85	0.75	0.63	0.55	
		032	4.77	2.97	2.75	2.34	2.09	1.92	1.71	1.44	1.27	
		040	30.6	17.7	16.4	14.0	12.5	11.4	10.2	8.6	7.5	5.9
		050	50.1	30.9	28.6	24.4	21.8	20.0	17.8	15.0	13.1	10.5
		063	85.1	51.8	48.0	40.9	36.5	33.4	29.7	25.0	21.7	16.9
		080	242	154	143	122	109	100	89	75	65	51
		110	591	314	291	248	221	202	179	148	126	90
		140	1160	660	611	520	463	422	372	304	252	
		180	3030	1580	1460	1240	1100	1000	880	690	540	
		250	10400	3580	3300	2790	2460	2210	1880	1340		
	270	025	2.13	1.39	1.30	1.11	0.99	0.91	0.81	0.68	0.60	
		032	7.41	4.87	4.56	3.89	3.48	3.19	2.84	2.42	2.14	
		040	41.6	26.1	24.4	20.8	18.6	17.0	15.2	12.9	11.4	9.3
		050	50.1	32.6	30.5	26.0	23.2	21.3	19.0	16.0	14.1	11.5
		063	85.1	54.6	51.1	43.6	39.0	35.7	31.8	26.8	23.5	18.8
		080	242	163	152	130	116	106	95	80	70	57
		110	591	332	310	264	236	216	192	160	138	104
		140	1160	697	652	556	495	452	400	331	280	195
		180	3030	1670	1560	1330	1180	1080	950	770	620	
		250	10400	3770	3520	2990	2640	2390	2060	1540		
	300	025	2.89	1.97	1.86	1.59	1.42	1.30	1.16	0.98	0.87	
		032	7.41	5.09	4.81	4.11	3.67	3.36	3.00	2.55	2.27	
		040	41.6	27.2	25.7	22.0	19.6	18.0	16.0	13.6	12.0	10.0
		050	67.0	45.2	42.7	36.4	32.5	29.8	26.6	22.6	20.0	16.6
		063	119	65.0	61.4	52.4	46.8	42.9	38.2	32.4	28.5	23.3
		080	262	207	204	174	156	142	127	108	95	79
		110	738	451	426	364	325	297	264	223	195	154
		140	1640	907	857	731	652	596	529	443	382	289
		180	3030	1740	1650	1400	1250	1140	1010	820	690	
		250	10400	3930	3710	3150	2790	2530	2200	1710	1280	
	330	025	2.89	2.04	1.93	1.66	1.48	1.36	1.21	1.03	0.91	
		032	7.41	5.27	4.99	4.29	3.83	3.51	3.14	2.67	2.38	
		040	41.6	28.2	26.7	22.9	20.5	18.7	16.7	14.2	12.6	10.5
		050	67.0	46.7	44.2	38.0	33.9	31.1	27.8	23.6	20.9	17.5
		063	129	106	106	97	87	80	71	60	54	45
		080	262	214	211	182	162	149	133	113	100	83
		110	738	467	442	379	339	310	276	233	205	165
		140	1640	939	888	763	681	623	554	465	405	315
		180	3030	1800	1710	1460	1310	1190	1060	870	740	520
		250	10400	4070	3840	3290	2920	2650	2320	1840	1440	

Roller gear cam drive (standard housing)

Output torque table

● RGIS flange shaft (1 dwell)

Cam curve/MS

Index number	Total index angle (deg)	Size	Static rated output torque (N·m)	Rated dynamic output torque (N·m)								
				Input shaft rotational speed (rpm)								
				30	60	90	120	150	200	300	400	600
4	90	032	1.39	0.78	0.69	0.59	0.53	0.48	0.42	0.34		
	120	025	1.09	0.72	0.64	0.55	0.49	0.45	0.40	0.33	0.29	
		032	1.39	0.92	0.82	0.70	0.62	0.57	0.51	0.42	0.36	
	150	025	1.49	0.83	0.75	0.63	0.57	0.52	0.45	0.37	0.31	
		032	2.70	1.52	1.37	1.17	1.04	0.95	0.84	0.69	0.58	
		040	10.2	6.66	5.98	5.08	4.52	4.10	3.58	2.83	2.20	0.95
		050	12.8	8.90	8.44	8.11	7.87	7.66	7.36	5.99	4.90	2.89
		063	63.6	35.4	31.8	27.0	24.1	21.9	19.3	15.7	12.9	7.8
		080	108	59.7	53.6	45.6	40.5	36.8	32.2	25.6	20.3	9.8
		110	331	193	173	147	130	118	103	79	59	18
		140	760	362	324	275	242	218	185	132	82	
		180	1490	768	686	577	503	445	362	211		
		250	4150	1990	1770	1460	1250	1060	780			
	180	025	1.49	0.92	0.84	0.71	0.64	0.58	0.52	0.43	0.37	
		032	2.70	1.68	1.54	1.31	1.17	1.07	0.95	0.79	0.68	
		040	10.9	7.79	7.52	7.23	7.03	6.87	6.64	5.53	4.71	3.37
		050	19.9	14.4	13.9	13.4	13.0	12.7	12.3	11.7	10.6	8.1
		063	63.6	38.9	35.6	30.3	27.0	24.7	21.9	18.1	15.4	10.9
		080	152	75.0	68.5	58.4	52.0	47.5	41.9	34.5	28.9	19.3
		110	359	258	246	210	187	170	150	122	101	63
		140	950	522	476	405	359	326	285	225	174	
		180	2100	1060	960	820	720	650	550	400	260	
		250	4150	2190	1990	1670	1450	1270	1020	530		
	210	025	2.13	1.41	1.31	1.12	1.00	0.91	0.81	0.68	0.60	
		032	4.77	3.18	2.95	2.52	2.25	2.06	1.84	1.55	1.37	
		040	17.9	13.9	13.4	13.1	12.8	12.3	10.9	9.2	8.0	6.4
		050	19.9	15.4	15.1	14.5	14.2	13.8	13.4	12.8	11.7	9.3
		063	63.6	41.7	38.6	33.0	29.4	26.9	23.9	20.0	17.3	13.1
		080	164	126	124	113	101	92	82	69	60	47
		110	359	276	268	228	203	186	164	136	116	82
		140	950	560	518	441	393	358	315	255	208	123
		180	2100	1130	1050	890	790	720	620	480	350	
		250	4150	2350	2160	1830	1600	1430	1190	770		
	240	025	2.13	1.49	1.40	1.19	1.06	0.97	0.87	0.73	0.65	
		032	4.77	3.35	3.15	2.69	2.40	2.20	1.96	1.66	1.47	
		040	17.9	14.6	14.5	14.0	13.6	13.1	11.6	9.9	8.7	7.0
		050	19.9	16.2	16.1	15.5	15.1	14.7	14.3	13.7	12.6	10.2
		063	63.6	43.9	41.1	35.1	31.3	28.7	25.5	21.5	18.7	14.7
		080	164	133	132	120	107	98	88	74	65	52
		110	359	291	285	243	217	198	176	147	127	95
		140	950	589	552	471	419	383	338	278	234	158
		180	2100	1190	1120	950	840	770	670	530	420	200
		250	5840	3450	3230	2740	2420	2190	1880	1410	970	
	270	025	2.13	1.55	1.47	1.25	1.12	1.03	0.92	0.78	0.69	
		032	4.77	3.49	3.30	2.82	2.52	2.31	2.06	1.75	1.55	
		040	17.9	15.1	15.1	14.6	14.2	13.7	12.2	10.4	9.2	7.5
		050	19.9	16.8	16.8	16.2	15.8	15.5	15.0	14.4	13.3	11.0
		063	63.6	45.5	43.1	36.8	32.9	30.1	26.8	22.7	19.9	16.0
		080	164	138	138	126	113	103	92	78	69	56
		110	591	367	348	297	265	243	216	182	158	124
		140	1160	775	733	626	558	510	453	378	326	243
		180	2860	1530	1450	1240	1100	1000	890	720	600	380
		250	5840	3580	3380	2880	2550	2310	2010	1560	1170	

● RGIS flange shaft (1 dwell)

Cam curve/MS

Index number	Total index angle (deg)	Size	Static rated output torque (N·m)	Rated dynamic output torque (N·m)								
				Input shaft rotational speed (rpm)								
				30	60	90	120	150	200	300	400	600
4	300	025	2.13	1.60	1.51	1.31	1.17	1.07	0.95	0.81	0.72	
		032	4.77	3.59	3.40	2.94	2.62	2.40	2.15	1.83	1.62	
		040	30.6	21.3	20.2	17.4	15.6	14.3	12.7	10.8	9.6	7.9
		050	50.1	37.1	35.1	30.3	27.1	24.8	22.1	18.8	16.7	13.9
		063	85.1	62.3	59.0	50.9	45.5	41.7	37.2	31.5	27.9	23.0
		080	164	142	142	131	117	107	96	81	72	59
		110	591	378	358	309	276	252	225	190	166	133
		140	1160	798	755	651	581	532	473	396	344	266
		180	2860	1580	1490	1290	1150	1050	930	760	650	450
		250	5840	3680	3480	2990	2660	2420	2110	1680	1320	
	330	025	2.13	1.64	1.55	1.35	1.21	1.10	0.99	0.84	0.74	
		032	4.77	3.68	3.48	3.03	2.71	2.48	2.22	1.89	1.68	
		040	30.6	21.8	20.7	18.0	16.1	14.7	13.1	11.2	9.9	8.3
		050	50.1	37.9	35.9	31.2	27.9	25.6	22.8	19.4	17.2	14.4
		063	85.1	63.8	60.4	52.5	46.9	43.0	38.4	32.6	28.9	24.0
		080	164	145	145	135	121	111	99	84	75	62
		110	591	386	366	318	284	260	232	196	173	140
		140	1160	816	773	672	600	549	489	411	359	284
		180	2860	1620	1530	1330	1180	1080	960	800	680	500
		250	5840	3760	3560	3090	2750	2500	2200	1770	1430	800
5	120	040	7.19	4.92	4.36	3.70	3.27	2.95	2.53	1.88	1.27	
		050	13.1	8.31	7.38	6.27	5.55	5.02	4.35	3.32	2.40	
		063	16.4	11.2	10.5	10.0	9.7	9.3	8.8	6.6	4.6	
		080	80.0	45.0	39.9	33.9	30.0	27.1	23.4	17.6	12.4	
		110	200	94.1	83.3	70.3	61.6	54.9	45.7	29.6	13.1	
		140	420	245	217	182	159	140	115	67	16	
		180	976	464	407	337	285	241	172			
		250	2870	1330	1150	930	750	590	320			
	150	032	1.89	1.20	1.09	0.93	0.83	0.75	0.67	0.55	0.46	
		040	7.19	5.45	4.94	4.20	3.73	3.39	2.97	2.35	1.84	0.83
		050	12.8	9.86	9.45	9.09	8.83	8.61	8.31	6.87	5.77	3.88
		063	25.3	18.5	17.7	17.1	16.5	16.1	15.5	14.4	12.6	8.2
		080	108	67.0	60.8	51.8	46.1	42.0	37.0	30.1	24.7	15.0
		110	225	165	158	144	128	116	102	80	63	28
		140	462	335	317	269	237	214	184	137	93	
		180	976	523	471	396	344	302	242			
		250	2870	1490	1340	1110	940	800	580			
	180	032	2.70	1.86	1.71	1.46	1.31	1.19	1.06	0.89	0.78	
		040	10.2	7.92	7.31	6.23	5.55	5.07	4.48	3.70	3.12	2.15
		050	12.8	10.5	10.3	9.9	9.6	9.4	9.1	7.6	6.6	4.9
		063	25.3	20.0	19.5	18.7	18.2	17.8	17.2	16.2	14.5	10.7
		080	108	72.4	66.8	56.9	50.8	46.4	41.1	34.0	28.9	20.4
		110	225	178	174	158	141	129	113	92	76	47
		140	462	362	349	296	263	239	208	164	126	51
		180	1220	739	680	575	507	456	388	276	169	
		250	3910	1990	1820	1530	1340	1180	960	550		
	210	032	2.70	1.96	1.84	1.57	1.40	1.28	1.14	0.96	0.85	
		040	14.8	8.30	7.77	6.62	5.91	5.40	4.79	4.00	3.44	2.55
		050	12.8	11.0	10.9	10.5	10.2	9.9	9.6	8.1	7.1	5.5
		063	63.6	45.2	42.3	36.1	32.2	29.4	26.2	22.0	19.2	15.1
		080	152	87.1	81.5	69.5	62.0	56.7	50.4	42.2	36.6	28.0
		110	331	246	230	196	175	160	141	117	100	72
		140	462	382	373	318	283	257	226	183	149	85
		180	1490	986	922	783	695	630	548	427	323	111
		250	4150	2540	2370	2000	1760	1580	1340	940	550	

Roller gear cam drive (standard housing)

Output torque table

Index series

● RGIS flange shaft (1 dwell)

Cam curve/MS

Index number	Total index angle (deg)	Size	Static rated output torque (N·m)	Rated dynamic output torque (N·m)								
				Input shaft rotational speed (rpm)								
				30	60	90	120	150	200	300	400	600
5	240	025	1.49	1.12	1.06	0.90	0.81	0.74	0.66	0.56	0.49	
		032	2.70	2.04	1.93	1.65	1.47	1.35	1.20	1.02	0.90	
		040	10.9	9.39	9.39	9.05	8.81	8.63	8.38	7.12	6.26	5.04
		050	37.9	26.6	25.1	21.5	19.2	17.6	15.7	13.3	11.7	9.6
		063	63.6	46.9	44.4	37.9	33.8	31.0	27.6	23.3	20.5	16.4
		080	152	90.4	85.6	73.1	65.2	59.7	53.1	44.7	39.1	30.9
		110	331	255	241	206	184	168	149	125	108	82
		140	760	483	457	390	348	317	281	231	195	133
		180	1490	1020	970	830	730	670	590	470	370	190
		250	4150	2630	2490	2110	1870	1690	1450	1080	750	
	270	025	1.49	1.15	1.09	0.94	0.84	0.77	0.69	0.58	0.51	
		032	3.66	2.84	2.69	2.32	2.08	1.90	1.70	1.44	1.28	
		040	10.9	9.65	9.65	9.41	9.16	8.97	8.72	7.42	6.55	5.36
		050	37.9	27.3	25.8	22.3	19.9	18.2	16.3	13.8	12.2	10.1
		063	63.6	48.2	45.6	39.4	35.2	32.2	28.7	24.3	21.4	17.5
		080	152	92.9	87.9	75.9	67.8	62.1	55.3	46.7	41.1	33.1
		110	359	319	315	272	243	222	198	167	146	116
		140	760	497	470	406	362	331	293	244	208	152
		180	1490	1050	1000	860	760	700	610	500	410	250
		250	4150	2710	2560	2200	1950	1760	1530	1190	890	260
	300	025	1.49	1.18	1.11	0.97	0.87	0.79	0.71	0.60	0.53	
		032	3.66	2.90	2.75	2.40	2.14	1.96	1.75	1.49	1.32	
		040	10.9	9.85	9.85	9.70	9.44	9.25	9.00	7.67	6.79	5.60
		050	37.9	27.8	26.3	23.0	20.5	18.8	16.8	14.3	12.6	10.5
		063	63.6	49.1	46.5	40.6	36.2	33.2	29.6	25.1	22.2	18.3
		080	152	94.8	89.8	78.3	69.9	64.0	57.1	48.3	42.6	34.8
		110	359	326	322	280	250	229	204	173	152	123
		140	760	508	480	418	373	341	303	254	219	166
		180	1490	1080	1020	890	790	720	640	520	440	290
		250	4150	2760	2610	2270	2010	1830	1600	1270	990	450
	330	025	1.49	1.20	1.13	1.00	0.89	0.81	0.73	0.62	0.55	
		032	3.66	2.95	2.79	2.46	2.20	2.01	1.80	1.53	1.36	
		040	10.9	10.0	10.0	9.9	9.7	9.5	9.2	7.9	7.0	5.8
		050	37.9	28.3	26.7	23.5	21.0	19.3	17.2	14.6	13.0	10.9
		063	63.6	49.9	47.3	41.6	37.1	34.0	30.4	25.8	22.8	19.0
		080	152	96.4	91.2	80.2	71.6	65.6	58.5	49.6	43.9	36.2
		110	359	331	327	287	257	235	210	178	157	128
		140	760	516	488	429	383	350	312	262	228	177
		180	1490	1090	1030	910	810	740	660	540	460	330
		250	4150	2800	2650	2320	2070	1880	1650	1330	1070	580
6	60	025	1.09	0.60	0.53	0.45	0.40	0.37	0.32	0.26	0.21	
		032	2.69	1.49	1.32	1.13	1.00	0.91	0.80	0.66		
	90	025	1.09	0.75	0.67	0.57	0.51	0.46	0.41	0.35	0.30	
		032	2.69	1.86	1.65	1.41	1.26	1.15	1.02	0.86	0.75	
		040	10.9	6.52	6.11	5.85	5.65	5.48	5.20	4.03	2.98	0.81
		050	19.9	12.1	11.3	10.9	10.5	10.2	9.8	8.8	7.4	3.8
		063	85.1	43.4	38.5	32.8	29.1	26.4	23.1	18.3	14.3	6.3
		080	164	98.7	92.5	84.4	75.0	68.1	59.6	47.4	37.3	17.7
		110	591	263	234	198	175	158	135	100	67	
		140	950	436	385	325	284	252	209	131		
		180	2860	1090	960	800	690	610	480	220		
		250	5840	2570	2240	1830	1520	1240	790			

RGIS flange shaft (1 dwell)

Cam curve/MS

Index number	Total index angle (deg)	Size	Static rated output torque (N·m)	Rated dynamic output torque (N·m)								
				Input shaft rotational speed (rpm)								
				30	60	90	120	150	200	300	400	600
6	120	025	2.89	1.78	1.60	1.36	1.21	1.11	0.99	0.82	0.71	
		032	7.41	4.61	4.14	3.53	3.15	2.88	2.57	2.16	1.89	
		040	41.6	24.7	22.2	18.9	16.9	15.4	13.7	11.4	9.9	7.4
		050	67.0	41.1	36.9	31.5	28.1	25.7	22.8	19.1	16.5	12.6
		063	119	59.1	53.0	45.2	40.3	36.8	32.6	27.0	22.9	16.2
		080	262	188	176	150	134	122	109	90	78	57
		110	738	410	368	313	279	254	224	182	149	90
		140	1640	822	737	626	556	505	441	347	269	
		180	4270	2210	1980	1680	1480	1340	1150	860	600	
		250	10400	3570	3180	2670	2320	2030	1620			
	150	025	3.76	2.56	2.35	2.00	1.79	1.64	1.46	1.23	1.08	
		032	7.41	5.09	4.66	3.98	3.55	3.25	2.90	2.46	2.17	
		040	41.6	27.2	24.9	21.3	19.0	17.4	15.5	13.0	11.4	9.1
		050	67.0	45.2	41.4	35.3	31.5	28.8	25.7	21.7	19.1	15.3
		063	129	102	99	90	81	74	66	56	49	39
		080	262	207	198	169	151	138	123	103	90	71
		110	738	451	413	352	314	287	254	211	180	130
		140	1640	907	830	707	629	574	506	413	343	218
		180	4270	2440	2230	1890	1680	1530	1340	1070	840	
		250	10400	3930	3580	3030	2660	2380	2010	1370		
	180	025	3.76	2.73	2.54	2.17	1.94	1.78	1.59	1.35	1.19	
		032	7.41	5.42	5.05	4.31	3.85	3.53	3.15	2.67	2.37	
		040	41.6	28.9	26.9	23.0	20.5	18.8	16.8	14.2	12.5	10.2
		050	67.0	47.9	44.6	38.1	34.0	31.2	27.8	23.6	20.8	17.1
		063	129	109	107	98	87	80	71	60	53	44
		080	431	268	249	213	190	174	155	131	116	94
		110	903	606	564	481	430	393	350	294	256	201
		140	2230	1190	1110	950	840	770	680	570	490	360
		180	4270	2590	2410	2050	1830	1670	1470	1200	1000	630
		250	10400	4170	3870	3290	2910	2620	2260	1690	1170	
	210	025	3.76	2.86	2.70	2.30	2.06	1.88	1.68	1.43	1.27	
		032	7.41	5.66	5.34	4.56	4.07	3.73	3.33	2.84	2.52	
		040	41.6	30.1	28.5	24.3	21.7	19.9	17.7	15.1	13.3	11.1
		050	67.0	49.9	47.1	40.2	35.9	32.9	29.4	24.9	22.1	18.4
		063	129	113	113	103	92	84	75	64	57	47
		080	431	279	263	225	201	184	164	139	123	102
		110	903	631	596	508	454	416	370	313	275	221
		140	2230	1240	1170	1000	890	820	730	610	530	410
		180	4270	2700	2550	2170	1940	1770	1570	1300	1100	780
		250	10400	4340	4090	3480	3090	2800	2440	1910	1450	
	240	025	3.76	2.94	2.79	2.40	2.15	1.97	1.76	1.49	1.33	
		032	7.41	5.83	5.52	4.75	4.25	3.89	3.48	2.96	2.64	
		040	41.6	31.0	29.4	25.3	22.6	20.7	18.5	15.7	14.0	11.7
		050	67.0	51.3	48.5	41.8	37.4	34.2	30.6	26.0	23.1	19.4
		063	129	116	116	107	96	88	78	67	59	50
		080	431	287	271	234	209	191	171	145	129	108
		110	903	649	614	529	473	433	386	327	289	236
		140	2230	1280	1210	1040	930	850	760	640	560	450
		180	4270	2780	2630	2270	2020	1850	1640	1370	1180	890
		250	10400	4470	4220	3630	3220	2930	2570	2060	1650	

Roller gear cam drive (standard housing)

Output torque table

Index series

● RGIS flange shaft (1 dwell)

Cam curve/MS

Index number	Total index angle (deg)	Size	Static rated output torque (N·m)	Rated dynamic output torque (N·m)								
				Input shaft rotational speed (rpm)								
				30	60	90	120	150	200	300	400	600
6	270	025	3.76	3.01	2.85	2.48	2.22	2.03	1.81	1.55	1.38	
		032	7.41	5.95	5.64	4.91	4.39	4.02	3.59	3.06	2.73	
		040	41.6	31.7	30.0	26.1	23.3	21.4	19.1	16.2	14.4	12.1
		050	67.0	52.3	49.5	43.1	38.5	35.3	31.5	26.8	23.9	20.1
		063	129	119	119	111	99	91	81	69	61	52
		080	431	293	277	241	216	198	176	150	133	112
		110	1270	825	781	680	608	557	497	422	374	311
		140	2230	1310	1240	1080	960	880	790	660	580	470
		180	4270	2840	2690	2340	2090	1910	1700	1430	1240	960
		250	10400	4560	4310	3740	3330	3040	2680	2180	1790	1100
	300	025	3.76	3.06	2.90	2.55	2.27	2.08	1.86	1.59	1.41	
		032	7.41	6.05	5.73	5.03	4.50	4.12	3.68	3.14	2.80	
		040	41.6	32.1	30.4	26.7	23.9	21.9	19.6	16.7	14.8	12.5
		050	67.0	53.1	50.2	44.2	39.5	36.2	32.3	27.5	24.5	20.7
		063	129	120	120	113	101	93	83	71	63	53
		080	431	297	281	247	221	203	181	154	137	115
		110	1270	838	793	697	623	571	510	433	385	321
		140	2230	1330	1260	1100	990	900	810	680	600	490
		180	4270	2890	2730	2400	2140	1960	1750	1470	1290	1020
		250	10400	4620	4370	3840	3420	3120	2760	2270	1900	1280
	330	025	3.76	3.10	2.93	2.60	2.32	2.13	1.90	1.62	1.45	
		032	7.41	6.12	5.80	5.13	4.59	4.21	3.76	3.21	2.86	
		040	41.6	32.5	30.8	27.3	24.4	22.4	20.0	17.0	15.2	12.8
		050	67.0	53.7	50.8	45.0	40.3	36.9	33.0	28.1	25.0	21.2
		063	129	122	122	116	103	95	85	72	64	54
		080	431	301	285	252	226	207	185	157	140	118
		110	1270	847	802	710	636	582	520	442	393	330
		140	2230	1340	1270	1130	1010	920	820	700	620	510
		180	4270	2920	2760	2450	2190	2000	1780	1510	1320	1070
		250	10400	4680	4420	3910	3490	3190	2820	2340	1990	1410
8	45	032	1.39	0.76	0.67	0.57	0.50	0.46	0.39	0.30		
	60	032	1.39	0.89	0.79	0.68	0.60	0.55	0.48	0.39	0.32	
	90	025	2.13	1.31	1.16	0.99	0.88	0.80	0.71	0.58	0.48	
		032	4.77	2.95	2.63	2.24	2.00	1.82	1.62	1.34	1.15	
		040	10.9	7.76	7.28	6.99	6.77	6.59	6.31	5.09	4.08	2.18
		050	50.1	30.8	27.4	23.3	20.8	19.0	16.8	13.8	11.6	7.9
		063	85.1	51.6	45.8	39.0	34.7	31.7	27.9	22.7	18.7	11.4
		080	164	117	110	101	90	82	72	59	48	30
		110	359	257	238	202	179	163	141	109	81	
		140	950	519	460	390	343	309	263	187	114	
		180	2100	1050	930	780	680	600	490	280		
		250	4150	2180	1900	1570	1310	1090	740			
	120	025	2.13	1.49	1.35	1.15	1.03	0.94	0.84	0.70	0.61	
		032	4.77	3.35	3.05	2.60	2.32	2.13	1.89	1.59	1.40	
		040	30.6	20.0	18.1	15.5	13.8	12.6	11.2	9.4	8.1	6.2
		050	50.1	34.7	31.6	26.9	24.0	22.0	19.6	16.4	14.3	11.0
		063	85.1	58.3	53.0	45.2	40.3	36.9	32.7	27.3	23.5	17.5
		080	242	174	158	135	120	110	98	82	71	53
		110	591	354	321	274	244	222	196	161	134	86
		140	1160	745	677	576	512	465	408	326	260	134
		180	2100	1190	1080	920	810	730	620	450	290	
		250	4150	2460	2220	1860	1620	1420	1130	590		

● RGIS flange shaft (1 dwell)

Cam curve/MS

Index number	Total index angle (deg)	Size	Static rated output torque (N·m)	Rated dynamic output torque (N·m)								
				Input shaft rotational speed (rpm)								
				30	60	90	120	150	200	300	400	600
8	150	025	2.13	1.60	1.48	1.27	1.13	1.03	0.92	0.78	0.68	
		032	4.77	3.59	3.33	2.85	2.54	2.33	2.08	1.76	1.55	
		040	30.6	21.3	19.8	16.9	15.1	13.8	12.3	10.4	9.1	7.3
		050	50.1	37.1	34.4	29.3	26.2	24.0	21.4	18.1	15.9	12.8
		063	85.1	62.3	57.8	49.3	44.0	40.3	35.9	30.2	26.4	20.9
		080	242	186	172	147	131	120	107	90	79	63
		110	591	378	350	299	266	244	216	180	155	114
		140	1160	798	740	630	561	512	453	372	313	210
		180	2860	1580	1460	1240	1100	1000	880	700	550	260
		250	5840	3680	3400	2880	2540	2290	1950	1410	900	
	180	025	2.13	1.67	1.57	1.34	1.20	1.10	0.98	0.83	0.73	
		032	4.77	3.75	3.54	3.02	2.70	2.47	2.20	1.87	1.66	
		040	30.6	22.2	21.0	17.9	16.0	14.6	13.1	11.1	9.8	8.0
		050	50.1	38.5	36.4	31.0	27.7	25.4	22.6	19.2	17.0	14.0
		063	85.1	64.9	61.2	52.2	46.6	42.7	38.1	32.2	28.4	23.1
		080	242	193	182	156	139	127	114	96	85	70
		110	738	513	484	413	369	337	300	253	221	176
		140	1640	1040	980	830	740	680	600	500	440	330
		180	2860	1640	1550	1320	1170	1070	940	770	640	400
		250	5840	3830	3600	3060	2710	2460	2130	1640	1220	
	210	025	2.13	1.72	1.62	1.40	1.25	1.15	1.02	0.87	0.77	
		032	4.77	3.85	3.65	3.14	2.81	2.57	2.30	1.96	1.74	
		040	30.6	22.8	21.6	18.6	16.6	15.2	13.6	11.5	10.2	8.5
		050	50.1	39.5	37.4	32.3	28.8	26.4	23.6	20.0	17.8	14.8
		063	85.1	66.6	63.0	54.3	48.6	44.5	39.7	33.7	29.8	24.6
		080	242	199	188	162	145	133	118	101	89	74
		110	738	527	498	430	384	351	313	265	233	189
		140	1640	1060	1010	870	770	710	630	530	460	360
		180	2860	1690	1600	1380	1230	1120	990	820	690	480
		250	5840	3930	3710	3190	2830	2580	2260	1800	1420	690
	240	025	2.13	1.75	1.66	1.45	1.29	1.18	1.06	0.90	0.80	
		032	4.77	3.92	3.71	3.24	2.90	2.65	2.37	2.02	1.80	
		040	30.6	23.2	22.0	19.2	17.1	15.7	14.0	11.9	10.6	8.9
		050	50.1	40.2	38.1	33.2	29.7	27.2	24.3	20.7	18.4	15.4
		063	85.1	67.8	64.2	56.0	50.0	45.8	40.9	34.8	30.8	25.7
		080	242	202	191	167	149	137	122	104	92	77
		110	738	536	507	443	395	362	323	274	242	199
		140	1640	1080	1030	890	800	730	650	550	480	390
		180	2860	1720	1630	1420	1270	1160	1030	860	740	550
		250	5840	3990	3780	3290	2930	2670	2350	1900	1560	930
	270	025	2.13	1.77	1.68	1.48	1.32	1.21	1.08	0.92	0.82	
		032	4.77	3.97	3.76	3.32	2.97	2.72	2.43	2.07	1.84	
		040	30.6	23.5	22.3	19.6	17.5	16.1	14.4	12.2	10.9	9.1
		050	50.1	40.7	38.5	34.0	30.4	27.8	24.9	21.2	18.8	15.9
		063	85.1	68.6	65.0	57.3	51.2	46.9	41.9	35.6	31.7	26.5
		080	262	249	246	217	194	178	159	135	121	101
		110	738	542	513	453	405	371	331	281	249	207
		140	1640	1100	1040	920	820	750	670	570	500	410
		180	2860	1740	1650	1450	1300	1190	1050	880	770	590
		250	5840	4040	3820	3370	3000	2740	2420	1990	1660	1100

Roller gear cam drive (standard housing)

Output torque table

Index series

● RGIS flange shaft (1 dwell)

Cam curve/MS

Index number	Total index angle (deg)	Size	Static rated output torque (N·m)	Rated dynamic output torque (N·m)								
				Input shaft rotational speed (rpm)								
				30	60	90	120	150	200	300	400	600
8	300	025	2.89	2.43	2.30	2.03	1.83	1.68	1.50	1.28	1.14	
		032	4.77	4.01	3.80	3.36	3.02	2.77	2.48	2.11	1.88	
		040	30.6	23.7	22.5	19.9	17.9	16.4	14.6	12.5	11.1	9.4
		050	50.1	41.1	38.9	34.4	30.9	28.3	25.3	21.6	19.2	16.2
		063	85.1	69.2	65.5	58.0	52.2	47.8	42.7	36.3	32.3	27.2
		080	262	252	249	220	198	181	162	138	123	104
		110	738	547	518	459	412	378	337	287	254	212
		140	1640	1110	1050	930	830	760	680	580	510	420
		180	2860	1760	1660	1470	1320	1210	1080	910	790	620
		250	5840	4080	3860	3410	3060	2790	2470	2050	1740	1230
	330	025	2.89	2.44	2.31	2.05	1.86	1.70	1.52	1.30	1.16	
		032	4.77	4.04	3.83	3.39	3.07	2.82	2.52	2.14	1.91	
		040	30.6	23.9	22.6	20.0	18.2	16.6	14.9	12.7	11.3	9.5
		050	50.1	41.3	39.1	34.6	31.4	28.8	25.7	21.9	19.5	16.5
		063	85.1	69.7	66.0	58.4	53.0	48.5	43.4	36.9	32.9	27.7
		080	262	253	250	222	201	184	165	140	125	106
		110	738	551	522	462	419	384	342	291	259	217
		140	1640	1120	1060	940	850	780	690	590	520	430
		180	2860	1770	1680	1480	1340	1230	1100	920	810	650
		250	5840	4110	3890	3440	3110	2840	2520	2100	1800	1330
9	90	032	2.70	1.78	1.58	1.35	1.20	1.10	0.97	0.79	0.67	
		040	10.9	8.22	7.72	7.42	7.20	7.01	6.74	5.49	4.49	2.66
		050	37.9	23.3	20.8	17.7	15.8	14.4	12.7	10.4	8.7	5.7
		063	63.6	41.1	36.5	31.1	27.7	25.2	22.2	17.9	14.6	8.5
		080	152	79.2	70.4	59.9	53.2	48.4	42.4	33.8	26.8	13.2
		110	331	224	199	169	149	135	117	90	66	15
		140	760	422	374	317	279	250	212	149	87	
		180	1490	894	791	664	578	509	411	228		
		250	4150	2310	2030	1670	1420	1200	860			
	120	025	1.49	1.08	0.99	0.84	0.75	0.69	0.61	0.51	0.44	
		032	2.70	1.98	1.81	1.54	1.38	1.26	1.12	0.94	0.81	
		040	10.9	9.12	8.80	8.47	8.24	8.05	7.79	6.52	5.59	4.12
		050	37.9	25.8	23.6	20.1	18.0	16.4	14.6	12.2	10.6	8.1
		063	63.6	45.5	41.6	35.5	31.6	28.9	25.6	21.3	18.3	13.3
		080	152	87.8	80.2	68.4	60.9	55.6	49.2	40.7	34.4	24.0
		110	359	302	288	245	218	199	176	144	121	79
		140	760	469	428	364	323	293	255	200	153	
		180	2100	1240	1130	960	850	760	660	490	340	
		250	4150	2560	2320	1950	1700	1500	1220	700		
	150	025	2.13	1.65	1.54	1.31	1.17	1.07	0.95	0.81	0.71	
		032	3.66	2.84	2.65	2.26	2.02	1.85	1.65	1.40	1.23	
		040	10.9	9.65	9.50	9.15	8.91	8.72	8.46	7.15	6.24	4.91
		050	37.9	27.3	25.4	21.7	19.4	17.7	15.8	13.3	11.7	9.4
		063	85.1	64.1	59.7	51.0	45.5	41.7	37.1	31.3	27.5	22.0
		080	164	146	144	131	117	107	96	81	71	57
		110	359	319	311	265	236	216	192	160	138	102
		140	950	649	605	515	459	419	370	303	254	168
		180	2100	1310	1220	1040	920	840	730	580	450	210
		250	5840	3780	3510	2980	2630	2380	2040	1510	1020	

● RGIS flange shaft (1 dwell)

Cam curve/MS

Index number	Total index angle (deg)	Size	Static rated output torque (N·m)	Rated dynamic output torque (N·m)								
				Input shaft rotational speed (rpm)								
				30	60	90	120	150	200	300	400	600
9	180	025	2.13	1.71	1.62	1.38	1.23	1.13	1.01	0.85	0.76	
		032	4.77	3.83	3.63	3.10	2.77	2.54	2.26	1.92	1.71	
		040	10.9	9.98	9.98	9.63	9.37	9.18	8.92	7.58	6.67	5.40
		050	51.5	39.3	37.2	31.8	28.4	26.0	23.2	19.7	17.5	14.5
		063	85.1	66.2	62.7	53.6	47.9	43.8	39.1	33.1	29.2	23.9
		080	164	151	151	138	123	113	101	85	75	62
		110	359	330	326	278	249	227	202	170	148	116
		140	950	671	635	542	484	442	392	326	280	205
		180	2860	1680	1590	1360	1210	1100	970	800	660	430
		250	5840	3910	3690	3140	2790	2530	2200	1720	1310	470
	210	025	2.13	1.75	1.65	1.43	1.28	1.17	1.05	0.89	0.79	
		032	4.77	3.92	3.71	3.21	2.87	2.63	2.35	2.00	1.78	
		040	30.6	23.2	21.9	19.0	17.0	15.6	13.9	11.8	10.5	8.7
		050	51.5	40.1	38.0	32.9	29.4	27.0	24.1	20.5	18.2	15.2
		063	85.1	67.6	64.0	55.5	49.6	45.4	40.5	34.4	30.5	25.3
		080	164	154	154	143	128	117	105	89	79	65
		110	359	337	333	288	258	236	210	177	156	125
		140	1160	868	821	712	635	581	517	435	379	297
		180	2860	1720	1620	1410	1250	1140	1010	840	720	510
		250	5840	3990	3770	3260	2900	2640	2310	1860	1490	800
	240	025	2.13	1.77	1.68	1.47	1.32	1.21	1.08	0.92	0.81	
		032	4.77	3.97	3.76	3.30	2.95	2.70	2.42	2.06	1.83	
		040	30.6	23.5	22.3	19.5	17.5	16.0	14.3	12.1	10.8	9.0
		050	51.5	40.7	38.5	33.8	30.2	27.7	24.7	21.0	18.7	15.7
		063	85.1	68.6	65.0	57.0	50.9	46.7	41.6	35.4	31.5	26.3
		080	164	156	156	147	131	120	107	91	81	68
		110	359	341	338	296	265	242	216	183	161	131
		140	1160	881	834	731	653	598	532	449	395	317
		180	2860	1740	1650	1440	1290	1180	1050	870	760	570
		250	5840	4040	3820	3350	2980	2720	2400	1960	1620	1020
	270	025	2.13	1.79	1.70	1.50	1.34	1.23	1.10	0.94	0.83	
		032	4.77	4.02	3.80	3.37	3.01	2.76	2.47	2.10	1.87	
		040	30.6	23.7	22.5	19.9	17.8	16.3	14.6	12.4	11.1	9.3
		050	51.5	41.1	38.9	34.4	30.8	28.3	25.2	21.5	19.1	16.1
		063	85.1	69.3	65.6	58.1	52.0	47.6	42.5	36.2	32.2	27.0
		080	164	158	158	150	134	123	110	93	83	70
		110	359	345	341	302	270	247	221	187	166	136
		140	1160	890	842	746	667	611	545	461	406	331
		180	2860	1760	1670	1470	1320	1200	1070	900	780	610
		250	5840	4080	3860	3410	3050	2780	2460	2030	1710	1170
	300	025	2.13	1.81	1.71	1.51	1.37	1.25	1.12	0.95	0.85	
		032	4.77	4.05	3.83	3.39	3.07	2.81	2.51	2.14	1.91	
		040	30.6	23.9	22.6	20.1	18.1	16.6	14.8	12.6	11.3	9.5
		050	51.5	41.4	39.2	34.7	31.3	28.7	25.7	21.9	19.5	16.5
		063	85.1	69.8	66.1	58.5	52.9	48.4	43.3	36.9	32.8	27.6
		080	164	159	159	151	136	125	112	95	85	71
		110	591	423	400	354	320	293	262	222	197	164
		140	1160	897	849	751	679	622	554	470	416	342
		180	2860	1770	1680	1480	1340	1230	1090	920	810	640
		250	5840	4110	3890	3440	3100	2830	2510	2090	1780	1290

Roller gear cam drive (standard housing)

Output torque table

Index series

● RGIS flange shaft (1 dwell)

Cam curve/MS

Index number	Total index angle (deg)	Size	Static rated output torque (N·m)	Rated dynamic output torque (N·m)								
				Input shaft rotational speed (rpm)								
				30	60	90	120	150	200	300	400	600
9	330	025	2.13	1.82	1.72	1.52	1.39	1.27	1.14	0.97	0.86	
		032	4.77	4.07	3.85	3.41	3.11	2.85	2.55	2.17	1.94	
		040	30.6	24.1	22.8	20.2	18.4	16.8	15.0	12.8	11.4	9.7
		050	51.5	41.6	39.4	34.9	31.8	29.1	26.0	22.2	19.8	16.8
		063	85.1	70.2	66.4	58.8	53.6	49.1	43.9	37.4	33.3	28.1
		080	164	160	160	152	138	127	113	97	86	73
		110	591	425	402	356	325	297	266	226	201	168
		140	1160	902	854	756	689	631	563	478	423	351
		180	2860	1780	1690	1490	1360	1250	1110	940	820	660
		250	5840	4130	3910	3460	3150	2880	2560	2130	1840	1380
10	90	032	2.70	1.86	1.66	1.41	1.26	1.15	1.02	0.84	0.71	
		040	10.2	7.92	7.08	6.02	5.35	4.86	4.25	3.37	2.65	1.23
		050	12.8	10.5	9.9	9.6	9.3	9.0	8.7	7.1	5.8	3.5
		063	25.3	20.0	18.9	18.1	17.5	17.1	16.3	15.0	12.8	7.4
		080	108	72.4	64.7	55.0	48.9	44.5	39.0	31.2	24.8	12.7
		110	225	178	168	153	136	123	107	82	61	16
		140	462	362	337	285	251	226	192	135	81	
		180	1220	738	655	549	477	419	336	177		
		250	3910	1990	1750	1450	1220	1030	730			
	120	025	1.49	1.12	1.03	0.87	0.78	0.71	0.63	0.53	0.46	
		032	2.70	2.04	1.87	1.60	1.42	1.30	1.16	0.97	0.85	
		040	10.9	9.39	9.10	8.76	8.52	8.33	8.07	6.77	5.84	4.39
		050	37.9	26.6	24.4	20.8	18.6	17.0	15.1	12.7	11.0	8.5
		063	63.6	46.9	43.0	36.7	32.7	29.9	26.6	22.2	19.1	14.2
		080	152	90.4	83.0	70.7	63.1	57.6	51.1	42.3	36.1	25.9
		110	331	255	234	199	177	162	143	117	97	62
		140	760	483	443	377	335	304	266	210	164	74
		180	1490	1020	940	790	700	630	540	400	270	
		250	4150	2630	2400	2020	1770	1570	1290	790		
	150	025	1.49	1.18	1.10	0.94	0.84	0.77	0.68	0.58	0.51	
		032	2.70	2.14	2.01	1.71	1.53	1.40	1.25	1.06	0.93	
		040	10.9	9.85	9.75	9.39	9.14	8.94	8.68	7.35	6.44	5.12
		050	37.9	27.8	26.1	22.2	19.9	18.2	16.2	13.7	12.0	9.7
		063	63.6	49.1	46.0	39.3	35.1	32.1	28.6	24.1	21.0	16.7
		080	152	94.8	88.9	75.8	67.6	61.9	55.0	46.2	40.2	31.1
		110	359	326	318	272	242	222	197	165	142	108
		140	760	508	475	405	360	329	290	237	197	125
		180	1490	1080	1010	860	760	690	600	470	370	150
		250	4150	2760	2580	2180	1920	1730	1480	1060	670	
	180	025	1.49	1.21	1.15	0.99	0.88	0.81	0.72	0.61	0.54	
		032	3.66	2.99	2.83	2.43	2.17	1.99	1.78	1.51	1.34	
		040	10.9	10.1	10.1	9.8	9.6	9.4	9.1	7.7	6.8	5.6
		050	37.9	28.6	27.1	23.2	20.8	19.0	17.0	14.4	12.7	10.5
		063	85.1	67.2	63.6	54.7	48.8	44.7	39.9	33.8	29.9	24.6
		080	152	97.5	92.3	79.3	70.8	64.8	57.7	48.7	42.8	34.3
		110	359	335	331	284	254	232	207	174	152	120
		140	950	682	645	554	494	451	401	334	288	215
		180	2100	1380	1310	1120	1000	910	800	660	540	350
		250	4150	2840	2680	2290	2030	1840	1590	1220	890	

● RGIS flange shaft (1 dwell)

Cam curve/MS

Index number	Total index angle (deg)	Size	Static rated output torque (N·m)	Rated dynamic output torque (N·m)								
				Input shaft rotational speed (rpm)								
				30	60	90	120	150	200	300	400	600
10	210	025	2.13	1.77	1.67	1.46	1.30	1.19	1.07	0.91	0.80	
		032	3.66	3.05	2.88	2.51	2.24	2.06	1.84	1.56	1.39	
		040	10.9	10.3	10.3	10.1	9.9	9.7	9.4	8.0	7.1	5.9
		050	37.9	29.1	27.5	24.0	21.4	19.6	17.5	14.9	13.2	11.0
		063	85.1	68.4	64.8	56.4	50.4	46.2	41.2	35.0	31.1	25.8
		080	164	156	156	146	130	119	106	90	80	67
		110	359	341	337	293	262	240	214	181	159	129
		140	950	694	657	572	511	467	415	349	304	236
		180	2100	1410	1330	1160	1030	940	830	690	590	420
		250	5840	4030	3810	3310	2950	2680	2360	1910	1550	890
	240	025	2.13	1.79	1.70	1.49	1.34	1.22	1.09	0.93	0.83	
		032	3.66	3.08	2.92	2.57	2.30	2.11	1.88	1.60	1.43	
		040	10.9	10.4	10.4	10.4	10.1	9.9	9.6	8.2	7.3	6.1
		050	37.9	29.4	27.9	24.6	21.9	20.1	17.9	15.3	13.6	11.4
		063	85.1	69.2	65.5	57.8	51.6	47.3	42.2	35.9	31.9	26.7
		080	164	158	158	149	133	122	109	93	82	69
		110	359	345	341	300	268	246	219	186	164	135
		140	950	703	665	586	523	479	427	360	315	252
		180	2100	1420	1350	1190	1060	970	860	720	620	460
		250	5840	4080	3860	3390	3020	2760	2440	2000	1670	1090
	270	025	2.13	1.81	1.71	1.51	1.36	1.25	1.12	0.95	0.85	
		032	3.66	3.11	2.94	2.61	2.34	2.15	1.92	1.64	1.46	
		040	10.9	10.5	10.5	10.5	10.3	10.1	9.8	8.4	7.5	6.3
		050	37.9	29.7	28.1	24.9	22.4	20.5	18.3	15.6	13.9	11.7
		063	85.1	69.8	66.1	58.5	52.6	48.2	43.1	36.7	32.6	27.4
		080	164	159	159	151	136	124	111	95	84	71
		110	359	347	343	304	273	250	223	190	168	139
		140	950	709	671	594	534	489	436	368	324	263
		180	2100	1430	1360	1200	1080	990	880	740	640	490
		250	5840	4110	3890	3440	3090	2820	2490	2060	1750	1230
	300	025	2.13	1.82	1.72	1.52	1.38	1.27	1.13	0.97	0.86	
		032	3.66	3.13	2.96	2.62	2.38	2.18	1.95	1.66	1.48	
		040	10.9	10.6	10.6	10.6	10.5	10.3	10.0	8.5	7.6	6.4
		050	37.9	29.8	28.2	25.0	22.7	20.8	18.6	15.8	14.1	11.9
		063	85.1	70.2	66.5	58.9	53.4	49.0	43.7	37.3	33.2	28.0
		080	164	160	160	152	138	126	113	96	86	72
		110	359	349	346	306	278	254	227	193	171	143
		140	950	713	675	598	542	497	443	375	332	272
		180	2100	1440	1370	1210	1100	1000	890	750	660	520
		250	5840	4140	3910	3460	3140	2870	2540	2120	1820	1340
	330	025	2.13	1.83	1.73	1.53	1.40	1.29	1.15	0.98	0.87	
		032	3.66	3.14	2.98	2.64	2.41	2.21	1.98	1.69	1.50	
		040	10.9	10.6	10.6	10.6	10.6	10.4	10.1	8.7	7.7	6.5
		050	37.9	30.0	28.4	25.1	23.0	21.1	18.8	16.0	14.3	12.1
		063	85.1	70.5	66.8	59.1	54.1	49.6	44.3	37.8	33.7	28.5
		080	164	161	161	153	140	128	114	98	87	73
		110	359	351	347	307	281	258	230	196	174	146
		140	950	717	678	601	550	504	449	381	338	279
		180	2100	1450	1370	1210	1110	1020	910	770	670	540
		250	5840	4150	3930	3480	3180	2910	2580	2160	1870	1420

Roller gear cam drive (standard housing)

Output torque table

Index series

● RGIS flange shaft (1 dwell)

Cam curve/MS

Index number	Total index angle (deg)	Size	Static rated output torque (N·m)	Rated dynamic output torque (N·m)								
				Input shaft rotational speed (rpm)								
				30	60	90	120	150	200	300	400	600
12	90	032	1.89	1.38	1.25	1.06	0.95	0.86	0.76	0.63	0.53	
		040	7.19	6.13	5.52	4.69	4.17	3.79	3.31	2.61	2.03	0.88
		050	12.8	11.1	10.6	10.2	9.9	9.6	9.3	7.7	6.4	4.3
		063	25.3	21.2	20.2	19.4	18.8	18.4	17.7	16.3	14.3	9.2
		080	108	77.0	69.4	59.1	52.6	47.9	42.2	34.2	28.0	16.6
		110	225	189	180	164	146	132	116	91	71	30
		140	462	385	362	307	271	245	210	155	104	
		180	976	602	539	452	392	344	275			
		250	2870	1710	1520	1260	1070	900	650			
	120	032	1.89	1.49	1.38	1.17	1.05	0.96	0.85	0.71	0.62	
		040	7.19	6.49	6.01	5.12	4.56	4.16	3.67	3.02	2.52	1.70
		050	12.8	11.7	11.5	11.1	10.8	10.5	10.2	8.6	7.4	5.7
		063	25.3	22.8	22.2	21.4	20.8	20.3	19.7	18.6	16.8	12.7
		080	108	82.5	76.4	65.1	58.1	53.1	47.1	39.2	33.6	24.6
		110	225	203	198	181	161	147	130	107	89	59
		140	462	414	400	340	302	275	241	192	152	76
		180	976	646	596	504	444	399	338	237		
		250	2870	1830	1680	1410	1230	1090	880	500		
	150	032	1.89	1.54	1.46	1.24	1.11	1.02	0.91	0.76	0.67	
		040	10.2	9.14	8.64	7.37	6.57	6.01	5.35	4.49	3.90	3.02
		050	12.8	12.1	12.1	11.6	11.3	11.1	10.8	9.1	8.0	6.4
		063	25.3	23.6	23.5	22.7	22.1	21.6	20.9	19.9	18.3	14.5
		080	108	85.5	80.8	68.9	61.5	56.3	50.1	42.1	36.7	28.7
		110	225	210	209	191	171	156	139	116	99	74
		140	462	429	423	361	321	293	259	212	177	117
		180	1220	875	826	702	623	566	494	388	299	
		250	3910	2340	2200	1870	1650	1480	1270	920	580	
	180	032	1.89	1.58	1.49	1.29	1.15	1.06	0.94	0.80	0.71	
		040	10.2	9.30	8.80	7.62	6.80	6.23	5.55	4.68	4.11	3.29
		050	12.8	12.3	12.3	12.0	11.7	11.5	11.1	9.5	8.4	6.8
		063	25.3	24.1	24.1	23.5	22.9	22.4	21.8	20.8	19.2	15.7
		080	108	87.3	82.6	71.5	63.9	58.5	52.1	44.0	38.7	31.2
		110	331	280	265	230	205	188	167	141	123	97
		140	760	534	505	437	390	356	316	263	226	168
		180	1220	894	845	730	650	592	521	421	343	200
		250	3910	2390	2260	1940	1720	1560	1350	1040	770	
	210	032	1.89	1.60	1.51	1.33	1.19	1.09	0.97	0.82	0.73	
		040	10.2	9.40	8.90	7.81	6.98	6.39	5.70	4.82	4.26	3.47
		050	12.8	12.4	12.4	12.3	12.0	11.7	11.4	9.7	8.6	7.1
		063	25.3	24.4	24.4	24.2	23.5	23.0	22.4	21.5	19.9	16.5
		080	108	88.4	83.7	73.5	65.6	60.1	53.6	45.4	40.1	32.9
		110	331	284	269	236	211	193	172	145	128	103
		140	760	541	512	449	401	367	326	274	238	185
		180	1220	906	857	751	669	611	540	444	372	249
		250	3910	2420	2290	2000	1780	1620	1410	1120	880	420

● RGIS flange shaft (1 dwell)

Cam curve/MS

Index number	Total index angle (deg)	Size	Static rated output torque (N·m)	Rated dynamic output torque (N·m)								
				Input shaft rotational speed (rpm)								
				30	60	90	120	150	200	300	400	600
12	240	032	1.89	1.61	1.52	1.35	1.21	1.11	0.99	0.84	0.75	
		040	10.2	9.47	8.96	7.93	7.11	6.52	5.81	4.93	4.37	3.61
		050	12.8	12.5	12.5	12.5	12.2	12.0	11.7	10.0	8.8	7.4
		063	25.3	24.6	24.6	24.6	24.0	23.5	22.9	22.0	20.4	17.0
		080	108	89.2	84.4	74.7	67.0	61.4	54.8	46.5	41.2	34.2
		110	331	286	271	240	215	197	176	149	131	108
		140	760	545	516	457	409	375	334	281	246	196
		180	1220	914	865	764	684	625	554	460	392	283
		250	3910	2440	2310	2040	1820	1660	1460	1180	960	560
	270	032	1.89	1.62	1.53	1.36	1.23	1.13	1.01	0.86	0.76	
		040	10.9	10.6	10.6	10.6	10.5	10.3	10.0	8.5	7.6	6.4
		050	19.9	19.5	19.5	19.5	19.3	18.9	18.4	15.9	14.1	11.9
		063	25.3	24.7	24.7	24.7	24.4	23.9	23.3	22.4	20.8	17.4
		080	108	89.7	84.9	75.2	68.1	62.4	55.7	47.4	42.1	35.1
		110	331	288	273	241	219	200	179	152	134	111
		140	760	549	519	460	417	381	340	287	253	205
		180	1220	919	870	769	697	637	565	472	408	307
		250	3910	2450	2320	2050	1850	1690	1490	1220	1020	670
	300	032	2.70	2.33	2.21	1.95	1.79	1.64	1.46	1.25	1.11	
		040	10.9	10.7	10.7	10.7	10.6	10.4	10.2	8.7	7.7	6.5
		050	19.9	19.6	19.6	19.6	19.5	19.1	18.6	16.1	14.3	12.1
		063	63.6	53.2	50.4	44.6	40.8	37.4	33.4	28.5	25.3	21.4
		080	152	103	97	86	79	72	65	55	49	41
		110	331	289	274	242	222	203	181	154	137	114
		140	760	551	522	462	423	387	345	292	258	211
		180	1490	1170	1110	980	890	820	730	610	540	420
		250	4150	2980	2820	2490	2280	2080	1850	1530	1310	950
	330	032	2.70	2.34	2.21	1.96	1.80	1.66	1.48	1.26	1.13	
		040	10.9	10.7	10.7	10.7	10.7	10.6	10.3	8.8	7.8	6.6
		050	19.9	19.6	19.6	19.6	19.6	19.4	18.9	16.3	14.5	12.3
		063	63.6	53.4	50.5	44.7	41.0	37.9	33.8	28.8	25.7	21.7
		080	152	103	98	86	79	73	65	56	50	42
		110	331	290	275	243	223	206	184	156	139	116
		140	760	553	523	463	425	392	349	296	262	216
		180	1490	1170	1110	980	900	830	740	620	550	440
		250	4150	2990	2830	2500	2290	2110	1870	1560	1350	1010
15	90	080	31.8	28.4	27.2	26.2	25.3	24.6	23.5	21.4	18.2	10.0
		110	143	109	99	84	74	67	58	44	31	
		140	285	254	244	221	195	176	151	110	73	
		180	591	523	494	415	362	320	260	150		
		250	1630	1130	1010	830	700	580	400			
	120	080	80.0	63.7	59.6	50.8	45.3	41.4	36.7	30.5	26.1	19.1
		110	200	130	121	103	92	84	74	60	49	29
		140	285	266	263	239	213	193	169	134	105	48
		180	591	550	535	453	400	360	307	222	140	
		250	2020	1510	1400	1180	1030	910	740	430		
	150	080	80.0	65.2	61.7	53.1	47.4	43.3	38.6	32.4	28.2	22.0
		110	200	133	126	108	96	88	78	64	55	38
		140	420	357	338	290	258	236	208	171	143	95
		180	976	688	650	557	494	449	391	307	237	
		250	2020	1540	1450	1240	1090	980	830	580	340	

Roller gear cam drive (standard housing)

Output torque table

● RGIS flange shaft (1 dwell)

Cam curve/MS

Index number	Total index angle (deg)	Size	Static rated output torque (N·m)	Rated dynamic output torque (N·m)								
				Input shaft rotational speed (rpm)								
				30	60	90	120	150	200	300	400	600
15	180	080	80.0	66.1	62.5	54.7	48.8	44.7	39.8	33.6	29.6	23.8
		110	200	134	127	111	99	91	80	67	58	44
		140	420	362	342	299	267	244	216	180	154	112
		180	976	697	659	575	512	466	410	331	270	156
		250	2020	1560	1470	1280	1140	1030	890	670	470	
	210	080	80.0	66.6	63.0	55.8	49.9	45.7	40.8	34.6	30.5	25.0
		110	200	135	128	113	101	93	82	69	60	47
		140	420	365	345	305	273	250	222	186	161	124
		180	976	704	665	588	525	479	423	348	291	194
		250	2870	1980	1870	1650	1470	1340	1170	930	740	360
	240	080	80.0	67.0	63.4	56.1	50.8	46.6	41.6	35.3	31.2	25.9
		110	200	136	129	114	103	94	84	71	62	50
		140	420	367	347	307	278	254	227	191	167	132
		180	976	708	669	592	535	489	433	359	306	220
		250	2870	1990	1880	1660	1500	1370	1200	980	800	480
	270	080	80.0	67.2	63.6	56.3	51.6	47.3	42.2	35.9	31.8	26.5
		110	200	136	129	114	105	96	85	72	64	52
		140	420	368	348	308	282	258	230	194	171	137
		180	976	710	672	594	544	497	441	368	317	238
		250	2870	2000	1890	1670	1530	1390	1230	1010	850	560
	300	080	80.0	67.4	63.8	56.5	51.8	47.8	42.7	36.3	32.3	27.1
		110	200	137	129	115	105	97	86	73	65	53
		140	420	369	349	309	283	262	233	197	174	142
		180	976	712	674	596	546	504	448	376	326	252
		250	2870	2010	1900	1680	1530	1410	1250	1040	880	620
	330	080	80.0	67.5	63.9	56.6	51.9	48.4	43.2	36.8	32.7	27.5
		110	200	137	130	115	105	98	87	74	66	54
		140	420	370	350	310	284	265	236	200	177	145
		180	976	714	676	598	548	510	454	382	333	262
		250	2870	2010	1900	1680	1540	1430	1270	1060	910	660
16	90	080	31.8	28.7	27.7	26.6	25.7	25.0	24.0	21.9	18.7	10.8
		110	143	110	101	85	76	68	59	45	33	
		140	305	267	257	233	206	185	159	116	75.4	
		180	591	530	503	423	369	327	268	161		
		250	1630	1140	1030	850	720	600	420			
	120	080	31.8	30.0	29.7	28.5	27.7	27.1	26.1	24.5	21.9	15.8
		110	143	115	107	91	81	74	65	53	43	25
		140	285	268	266	242	215	196	171	137	108	53
		180	591	554	541	459	405	365	313	229	150	
		250	1630	1190	1110	930	810	710	570	300		
	150	080	31.8	30.6	30.6	29.8	28.9	28.3	27.4	26.0	23.7	18.4
		110	143	117	110	95	85	77	69	57	48	33
		140	285	274	274	253	225	205	181	149	124	81
		180	591	567	559	480	426	387	337	263	200	
		250	2020	1550	1460	1250	1100	990	840	600	370	
	180	080	80.0	66.3	62.8	55.1	49.2	45.0	40.1	33.9	29.8	24.1
		110	143	118	112	98	87	80	71	59	51	38
		140	285	277	277	260	232	212	188	156	133	97
		180	591	574	566	496	441	401	353	284	230	128
		250	2020	1570	1480	1290	1140	1030	900	680	490	

RGIS flange shaft (1 dwell)

Cam curve/MS

Index number	Total index angle (deg)	Size	Static rated output torque (N·m)	Rated dynamic output torque (N·m)								
				Input shaft rotational speed (rpm)								
				30	60	90	120	150	200	300	400	600
16	210	080	80.0	66.8	63.2	56.0	50.2	46.0	41.0	34.8	30.7	25.2
		110	200	136	128	114	102	93	83	70	61	48
		140	285	279	279	265	237	217	193	162	140	107
		180	591	578	571	504	452	412	364	298	249	162
		250	2020	1580	1490	1320	1170	1070	930	730	570	240
	240	080	80.0	67.1	63.5	56.2	51.1	46.8	41.8	35.5	31.4	26.1
		110	200	136	129	114	104	95	84	71	63	50
		140	285	281	281	266	242	221	197	166	145	114
		180	591	581	574	507	460	420	372	308	262	185
		250	2020	1590	1500	1320	1200	1090	960	770	620	340
	270	080	80.0	67.3	63.7	56.4	51.7	47.5	42.4	36.0	32.0	26.7
		110	200	137	129	114	105	96	86	73	64	52
		140	285	282	282	267	245	224	200	169	148	119
		180	976	712	673	596	545	499	444	371	320	242
		250	2020	1590	1510	1330	1220	1110	980	800	660	420
	300	080	80.0	67.5	63.9	56.6	51.9	48.0	42.9	36.5	32.5	27.2
		110	200	137	130	115	105	97	87	74	65	54
		140	285	282	282	268	245	227	203	171	151	123
		180	976	713	675	597	547	506	450	378	329	255
		250	2020	1600	1510	1330	1220	1130	1000	820	690	470
	330	080	80.0	67.6	64.0	56.7	52.0	48.6	43.4	36.9	32.9	27.6
		110	200	137	130	115	105	98	88	75	66	55
		140	285	283	283	268	246	230	205	174	153	126
		180	976	715	676	599	548	512	456	384	336	266
		250	2020	1600	1510	1340	1220	1140	1010	840	710	510

Roller gear cam drive (standard housing)

Output torque table

● RGIS flange shaft (2 dwell)

Cam curve/MS

Index number	Total index angle (deg)	Size	Static rated output torque (N·m)	Rated dynamic output torque (N·m)								
				Input shaft rotational speed (rpm)								
				15	30	45	60	75	100	150	200	300
16	120	025	1.49	1.04	0.98	0.83	0.74	0.68	0.61	0.51	0.45	0.35
		032	2.70	1.90	1.78	1.52	1.36	1.24	1.11	0.94	0.82	0.66
		040	16.1	13.0	12.9	12.4	12.1	11.8	11.5	9.8	8.6	7.0
		050	19.9	16.2	16.1	15.5	15.1	14.7	14.3	13.7	12.6	10.2
		063	63.6	43.9	41.1	35.1	31.3	28.7	25.5	21.5	18.7	14.7
		080	164	133	132	120	107	98.4	87.7	74.0	65.1	52.4
		110	359	291	285	243	217	198	176	147	127	95
		140	950	589	552	471	419	383	338	278	234	158
		180	2860	1470	1380	1180	1050	950	840	670	540	300
		250	5840	3450	3230	2740	2420	2190	1880	1410	970	
	150	025	2.13	1.60	1.51	1.31	1.17	1.07	0.95	0.81	0.72	0.59
		032	4.77	3.59	3.40	2.94	2.62	2.40	2.15	1.83	1.62	1.36
		040	30.6	21.3	20.2	17.4	15.6	14.3	12.7	10.8	9.6	7.9
		050	50.1	37.1	35.1	30.3	27.1	24.8	22.1	18.8	16.7	13.9
		063	85.1	62.3	59.0	50.9	45.5	41.7	37.2	31.5	27.9	23.0
		080	164	142	142	131	117	107	96	81	72	59
		110	591	378	358	309	276	252	225	190	166	133
		140	1160	798	755	651	581	532	473	396	344	266
		180	2860	1580	1490	1290	1150	1050	930	760	650	450
		250	5840	3680	3480	2990	2660	2420	2110	1680	1320	610
	180	025	2.13	1.67	1.58	1.39	1.24	1.14	1.01	0.86	0.77	0.64
		032	4.77	3.75	3.55	3.11	2.78	2.55	2.28	1.94	1.73	1.46
		040	30.6	22.2	21.0	18.5	16.5	15.1	13.5	11.5	10.2	8.5
		050	50.1	38.5	36.5	32.0	28.6	26.2	23.4	19.9	17.7	14.9
		063	119	74.0	70.1	61.5	54.9	50.3	44.9	38.2	34.0	28.4
		080	242	194	183	161	144	132	117	100	89	74
		110	591	393	372	327	292	267	238	202	178	146
		140	1160	832	787	690	616	564	503	424	372	298
		180	2860	1640	1560	1360	1220	1110	990	830	710	530
		250	5840	3830	3620	3170	2820	2570	2270	1850	1520	950
	210	025	2.89	2.33	2.20	1.95	1.75	1.60	1.43	1.22	1.09	0.92
		032	4.77	3.85	3.65	3.23	2.90	2.66	2.37	2.02	1.80	1.53
		040	30.6	22.8	21.6	19.1	17.2	15.7	14.1	12.0	10.7	9.0
		050	50.1	39.5	37.4	33.1	29.8	27.3	24.4	20.7	18.5	15.6
		063	119	76.0	71.9	63.7	57.2	52.4	46.8	39.8	35.5	29.8
		080	242	199	188	166	149	137	122	104	93	78
		110	591	403	382	338	304	278	248	211	187	155
		140	1640	1060	1010	890	800	730	650	550	490	400
		180	2860	1690	1600	1410	1270	1160	1030	870	760	590
		250	5840	3930	3720	3280	2940	2690	2380	1960	1660	1160
	240	025	2.89	2.37	2.24	1.99	1.81	1.66	1.48	1.26	1.12	0.95
		032	4.77	3.92	3.71	3.29	2.99	2.74	2.45	2.09	1.86	1.58
		040	30.6	23.2	22.0	19.5	17.7	16.2	14.5	12.3	11.0	9.3
		050	50.1	40.2	38.1	33.7	30.6	28.1	25.1	21.4	19.1	16.1
		063	119	77.3	73.2	64.8	58.9	54.0	48.2	41.1	36.6	30.9
		080	242	202	191	169	154	141	126	107	96	81
		110	591	411	389	344	313	286	256	217	193	161
		140	1640	1080	1030	910	830	760	670	570	510	420
		180	2860	1720	1630	1440	1310	1200	1070	900	790	630
		250	5840	4000	3780	3340	3030	2770	2460	2050	1760	1300

● RGIS flange shaft (2 dwell)

Cam curve/MS

Index number	Total index angle (deg)	Size	Static rated output torque (N·m)	Rated dynamic output torque (N·m)								
				Input shaft rotational speed (rpm)								
				15	30	45	60	75	100	150	200	300
16	270	025	2.89	2.40	2.27	2.01	1.85	1.70	1.52	1.29	1.15	0.98
		032	4.77	3.97	3.76	3.33	3.06	2.81	2.51	2.14	1.91	1.62
		040	30.6	23.5	22.3	19.7	18.1	16.6	14.8	12.6	11.3	9.5
		050	50.1	40.7	38.5	34.1	31.3	28.7	25.7	21.9	19.5	16.6
		063	119	78.3	74.1	65.6	60.2	55.2	49.4	42.1	37.5	31.8
		080	242	205	194	172	157	144	129	110	98	83
		110	591	416	393	348	319	293	262	223	198	166
		140	1640	1100	1040	920	840	770	690	590	520	440
		180	2860	1740	1650	1460	1340	1230	1090	930	820	660
		250	5840	4040	3830	3390	3100	2840	2520	2120	1840	1410
	300	025	2.89	2.43	2.30	2.03	1.87	1.73	1.55	1.32	1.18	1.00
		032	4.77	4.01	3.80	3.36	3.09	2.86	2.56	2.18	1.95	1.65
		040	30.6	23.7	22.5	19.9	18.2	16.9	15.1	12.9	11.5	9.8
		050	50.1	41.1	38.9	34.4	31.6	29.3	26.1	22.3	19.9	16.9
		063	119	79.0	74.8	66.2	60.7	56.3	50.3	42.9	38.3	32.4
		080	262	252	249	220	202	187	167	143	127	108
		110	738	547	518	459	421	390	348	297	264	223
		140	1640	1110	1050	930	850	790	700	600	530	450
		180	2860	1760	1660	1470	1350	1250	1120	950	840	690
		250	5840	4080	3860	3420	3130	2900	2580	2170	1890	1490
	330	025	2.89	2.44	2.31	2.05	1.88	1.76	1.57	1.34	1.20	1.02
		032	4.77	4.04	3.83	3.39	3.11	2.91	2.60	2.22	1.98	1.68
		040	30.6	23.9	22.6	20.0	18.4	17.2	15.3	13.1	11.7	9.9
		050	50.1	41.3	39.1	34.6	31.8	29.7	26.5	22.6	20.2	17.2
		063	119	79.5	75.3	66.7	61.1	57.2	51.1	43.6	38.9	33.0
		080	262	253	250	222	203	190	170	145	129	110
		110	738	551	522	462	424	396	354	301	269	227
		140	1640	1120	1060	940	860	800	720	610	540	460
		180	2860	1770	1680	1480	1360	1270	1130	960	850	710
		250	5840	4110	3890	3440	3150	2940	2620	2210	1940	1550
18	120	025	1.49	1.08	1.02	0.87	0.78	0.71	0.63	0.54	0.47	0.38
		032	3.66	2.68	2.53	2.16	1.93	1.76	1.57	1.33	1.18	0.97
		040	10.9	9.12	9.08	8.75	8.52	8.34	8.10	6.86	6.02	4.81
		050	37.9	25.8	24.4	20.8	18.6	17.0	15.1	12.8	11.3	9.2
		063	85.1	60.6	57.1	48.7	43.5	39.9	35.5	30.0	26.4	21.4
		080	152	87.8	82.8	70.6	63.1	57.7	51.3	43.1	37.6	29.4
		110	359	302	297	253	226	207	184	154	133	102
		140	950	612	577	492	439	400	354	293	248	174
		180	2100	1240	1170	990	880	800	710	570	460	250
		250	4150	2560	2410	2040	1800	1620	1390	1020	670	
	150	025	2.13	1.65	1.56	1.35	1.21	1.11	0.99	0.84	0.74	0.62
		032	3.66	2.84	2.69	2.33	2.09	1.91	1.71	1.45	1.29	1.08
		040	10.9	9.65	9.65	9.45	9.20	9.01	8.77	7.47	6.60	5.42
		050	37.9	27.3	25.8	22.4	20.0	18.3	16.4	13.9	12.3	10.2
		063	85.1	64.1	60.6	52.6	47.0	43.1	38.4	32.6	28.9	23.9
		080	164	146	146	136	121	111	99	84	75	62
		110	359	319	315	274	244	224	199	168	148	118
		140	950	649	614	532	475	434	386	324	281	215
		180	2100	1310	1240	1080	960	880	770	640	540	370
		250	5840	3780	3570	3090	2750	2500	2190	1760	1400	730

Roller gear cam drive (standard housing)

Output torque table

Index series

● RGIS flange shaft (2 dwell)

Cam curve/MS

Index number	Total index angle (deg)	Size	Static rated output torque (N·m)	Rated dynamic output torque (N·m)								
				Input shaft rotational speed (rpm)								
				15	30	45	60	75	100	150	200	300
18	180	025	2.13	1.71	1.62	1.42	1.27	1.17	1.04	0.89	0.79	0.66
		032	4.77	3.83	3.63	3.20	2.86	2.62	2.34	1.99	1.78	1.50
		040	30.6	22.7	21.5	18.9	16.9	15.5	13.9	11.8	10.5	8.8
		050	51.5	39.3	37.2	32.8	29.3	26.9	24.0	20.4	18.2	15.3
		063	85.1	66.2	62.7	55.3	49.4	45.3	40.4	34.4	30.6	25.6
		080	164	151	151	143	127	117	104	89	79	66
		110	359	330	326	287	257	235	210	178	157	129
		140	1160	849	804	709	633	579	516	436	384	310
		180	2860	1680	1590	1400	1250	1140	1020	850	740	560
		250	5840	3910	3690	3250	2900	2640	2330	1910	1590	1040
	210	025	2.13	1.75	1.65	1.46	1.32	1.21	1.08	0.92	0.82	0.69
		032	4.77	3.92	3.71	3.28	2.96	2.72	2.43	2.07	1.84	1.56
		040	30.6	23.2	21.9	19.4	17.5	16.1	14.4	12.2	10.9	9.2
		050	51.5	40.1	38.0	33.6	30.4	27.8	24.9	21.2	18.9	16.0
		063	85.1	67.6	64.0	56.7	51.2	46.9	41.9	35.7	31.8	26.7
		080	164	154	154	146	132	121	108	92	82	69
		110	591	410	388	343	310	284	253	215	191	159
		140	1160	868	822	727	656	601	536	454	401	330
		180	2860	1720	1620	1440	1300	1190	1060	890	780	610
		250	5840	3990	3770	3340	3000	2740	2430	2020	1720	1230
	240	025	2.13	1.77	1.68	1.49	1.36	1.24	1.11	0.95	0.85	0.72
		032	4.77	3.97	3.76	3.33	3.04	2.79	2.49	2.13	1.90	1.61
		040	30.6	23.5	22.3	19.7	18.0	16.5	14.7	12.6	11.2	9.5
		050	51.5	40.7	38.5	34.1	31.2	28.6	25.5	21.8	19.4	16.4
		063	85.1	68.6	65.0	57.5	52.6	48.2	43.0	36.7	32.7	27.6
		080	164	156	156	148	136	124	111	95	84	71
		110	591	416	393	348	318	292	260	221	197	165
		140	1160	881	834	738	674	618	551	468	415	344
		180	2860	1740	1650	1460	1330	1220	1090	920	810	650
		250	5840	4040	3830	3380	3090	2820	2510	2090	1810	1360
	270	025	2.13	1.79	1.70	1.50	1.38	1.27	1.14	0.97	0.86	0.73
		032	4.77	4.02	3.80	3.37	3.09	2.85	2.55	2.17	1.94	1.65
		040	30.6	23.7	22.5	19.9	18.3	16.9	15.1	12.8	11.5	9.7
		050	51.5	41.1	38.9	34.4	31.6	29.2	26.1	22.2	19.8	16.8
		063	85.1	69.3	65.6	58.1	53.3	49.2	43.9	37.4	33.4	28.3
		080	164	158	158	150	137	127	113	97	86	73
		110	591	420	397	352	323	298	266	226	201	169
		140	1160	890	843	746	684	631	563	479	425	355
		180	2860	1760	1670	1470	1350	1250	1110	940	830	680
		250	5840	4080	3860	3420	3130	2880	2570	2150	1870	1460
	300	025	2.13	1.81	1.71	1.51	1.39	1.29	1.16	0.99	0.88	0.75
		032	4.77	4.05	3.83	3.39	3.11	2.90	2.59	2.21	1.97	1.68
		040	30.6	23.9	22.7	20.1	18.4	17.1	15.3	13.1	11.7	9.9
		050	51.5	41.4	39.2	34.7	31.8	29.6	26.5	22.6	20.2	17.1
		063	85.1	69.8	66.1	58.5	53.7	50.0	44.7	38.1	34.0	28.8
		080	164	159	159	151	138	129	115	98	88	74
		110	591	423	400	354	325	303	270	230	205	173
		140	1160	897	849	752	689	642	573	488	434	364
		180	2860	1770	1680	1490	1360	1270	1130	960	850	700
		250	5840	4110	3890	3440	3160	2940	2610	2200	1930	1530

● RGIS flange shaft (2 dwell)

Cam curve/MS

Index number	Total index angle (deg)	Size	Static rated output torque (N·m)	Rated dynamic output torque (N·m)								
				Input shaft rotational speed (rpm)								
				15	30	45	60	75	100	150	200	300
18	330	025	2.13	1.82	1.72	1.52	1.40	1.31	1.17	1.00	0.89	0.76
		032	4.77	4.07	3.85	3.41	3.13	2.93	2.63	2.24	2.00	1.71
		040	30.6	24.1	22.8	20.2	18.5	17.3	15.5	13.3	11.8	10.1
		050	51.5	41.6	39.4	34.9	32.0	29.9	26.9	22.9	20.5	17.4
		063	85.1	70.2	66.4	58.8	54.0	50.5	45.3	38.7	34.5	29.3
		080	164	160	160	152	139	130	117	100	89	76
		110	591	425	402	356	327	306	274	234	208	176
		140	1160	902	854	756	693	648	582	495	441	371
		180	2860	1780	1690	1490	1370	1280	1150	980	860	720
		250	5840	4130	3910	3460	3170	2960	2650	2240	1970	1590
20	90	040	10.2	7.92	7.31	6.23	5.55	5.07	4.48	3.70	3.12	2.15
		050	19.9	15.8	15.4	14.9	14.5	14.2	13.7	11.7	10.2	7.9
		063	25.3	20.0	19.5	18.7	18.2	17.8	17.2	16.2	14.5	10.7
		080	108	72.4	66.8	56.9	50.8	46.4	41.1	34.0	28.9	20.4
		110	225	178	174	158	141	129	113	92	76	47
		140	462	362	349	296	263	239	208	164	126	51
		180	1220	739	680	575	507	456	388	276	169	
		250	3910	1990	1820	1530	1340	1180	960	550		
	120	025	1.49	1.12	1.06	0.90	0.81	0.74	0.66	0.56	0.49	0.40
		032	2.70	2.04	1.93	1.65	1.47	1.35	1.20	1.02	0.90	0.74
		040	10.9	9.39	9.39	9.05	8.81	8.63	8.38	7.12	6.26	5.04
		050	37.9	26.6	25.1	21.5	19.2	17.6	15.7	13.3	11.7	9.6
		063	63.6	46.9	44.4	37.9	33.8	31.0	27.6	23.3	20.5	16.4
		080	152	90.4	85.6	73.1	65.2	59.7	53.1	44.7	39.1	30.9
		110	331	255	241	206	184	168	149	125	108	82
		140	760	483	457	390	348	317	281	231	195	133
		180	1490	1020	970	830	730	670	590	470	370	190
		250	4150	2630	2490	2110	1870	1690	1450	1080	750	
	150	025	1.49	1.18	1.11	0.97	0.87	0.79	0.71	0.60	0.53	0.44
		032	3.66	2.90	2.75	2.40	2.14	1.96	1.75	1.49	1.32	1.11
		040	10.9	9.85	9.85	9.70	9.44	9.25	9.00	7.67	6.79	5.60
		050	37.9	27.8	26.3	23.0	20.5	18.8	16.8	14.3	12.6	10.5
		063	63.6	49.1	46.5	40.6	36.2	33.2	29.6	25.1	22.2	18.3
		080	152	94.8	89.8	78.3	69.9	64.0	57.1	48.3	42.6	34.8
		110	359	326	322	280	250	229	204	173	152	123
		140	760	508	480	418	373	341	303	254	219	166
		180	2100	1340	1270	1100	980	900	800	660	560	390
		250	4150	2760	2610	2270	2010	1830	1600	1270	990	450
	180	025	1.49	1.21	1.15	1.02	0.91	0.83	0.74	0.63	0.56	0.47
		032	3.66	2.99	2.83	2.51	2.24	2.05	1.83	1.56	1.39	1.17
		040	10.9	10.1	10.1	10.1	9.9	9.7	9.4	8.0	7.1	6.0
		050	37.9	28.6	27.1	24.0	21.4	19.6	17.5	14.9	13.3	11.1
		063	63.6	50.5	47.8	42.4	37.9	34.7	31.0	26.3	23.4	19.5
		080	152	97.6	92.3	81.7	73.1	67.0	59.8	50.8	45.0	37.3
		110	359	335	331	293	262	240	214	182	161	132
		140	950	682	645	571	511	467	416	352	309	248
		180	2100	1380	1310	1160	1030	940	840	700	610	460
		250	4150	2840	2680	2370	2110	1920	1690	1380	1130	690

Roller gear cam drive (standard housing)

Output torque table

Index series

● RGIS flange shaft (2 dwell)

Cam curve/MS

Index number	Total index angle (deg)	Size	Static rated output torque (N·m)	Rated dynamic output torque (N·m)								
				Input shaft rotational speed (rpm)								
				15	30	45	60	75	100	150	200	300
20	210	025	2.13	1.77	1.67	1.48	1.34	1.23	1.10	0.94	0.84	0.71
		032	3.66	3.05	2.88	2.55	2.32	2.12	1.90	1.62	1.44	1.22
		040	10.9	10.3	10.3	10.3	10.2	10.0	9.7	8.3	7.4	6.2
		050	37.9	29.1	27.5	24.4	22.1	20.3	18.1	15.4	13.7	11.6
		063	63.6	51.4	48.7	43.1	39.1	35.8	32.0	27.2	24.2	20.3
		080	164	156	156	148	134	123	110	94	83	70
		110	359	341	337	298	270	248	221	188	167	139
		140	950	694	657	582	528	483	431	365	322	264
		180	2100	1410	1330	1180	1070	980	870	730	640	500
		250	4150	2890	2730	2410	2180	1990	1760	1450	1230	840
	240	025	2.13	1.79	1.70	1.50	1.38	1.26	1.13	0.96	0.86	0.73
		032	3.66	3.08	2.92	2.58	2.37	2.17	1.94	1.66	1.48	1.25
		040	10.9	10.4	10.4	10.4	10.4	10.2	10.0	8.5	7.6	6.4
		050	37.9	29.4	27.9	24.7	22.6	20.8	18.5	15.8	14.1	11.9
		063	63.6	52.0	49.3	43.6	40.0	36.7	32.8	27.9	24.9	21.0
		080	164	158	158	150	137	126	113	96	86	72
		110	359	345	341	302	277	254	227	193	171	144
		140	950	703	665	589	540	495	442	375	332	275
		180	2100	1420	1350	1190	1090	1000	890	750	660	530
		250	5840	4080	3860	3410	3130	2860	2540	2130	1840	1410
	270	025	2.13	1.81	1.71	1.51	1.39	1.29	1.15	0.98	0.88	0.74
		032	3.66	3.11	2.94	2.61	2.39	2.22	1.98	1.69	1.51	1.28
		040	10.9	10.5	10.5	10.5	10.5	10.4	10.2	8.7	7.8	6.6
		050	37.9	29.7	28.1	24.9	22.8	21.1	18.9	16.1	14.4	12.2
		063	63.6	52.5	49.7	44.0	40.3	37.4	33.4	28.5	25.4	21.5
		080	164	159	159	151	138	128	115	98	87	74
		110	359	347	344	304	279	259	231	197	175	147
		140	950	709	671	594	545	505	451	383	340	283
		180	2100	1430	1360	1200	1100	1020	910	770	680	550
		250	5840	4110	3890	3440	3150	2920	2600	2190	1910	1500
	300	025	2.13	1.82	1.72	1.52	1.40	1.31	1.17	1.00	0.89	0.76
		032	3.66	3.13	2.96	2.62	2.41	2.25	2.01	1.72	1.53	1.30
		040	10.9	10.6	10.6	10.6	10.6	10.6	10.3	8.8	7.9	6.7
		050	37.9	29.8	28.2	25.0	22.9	21.4	19.2	16.4	14.6	12.4
		063	85.1	70.2	66.5	58.9	54.0	50.5	45.2	38.5	34.4	29.2
		080	164	160	160	152	139	130	117	99	89	75
		110	359	349	346	306	281	262	235	200	178	150
		140	950	713	675	598	548	513	458	390	346	290
		180	2100	1440	1370	1210	1110	1040	930	780	690	570
		250	5840	4140	3920	3460	3170	2960	2640	2230	1960	1560
	330	025	2.13	1.83	1.73	1.53	1.41	1.31	1.19	1.01	0.90	0.77
		032	3.66	3.14	2.98	2.64	2.42	2.26	2.04	1.74	1.55	1.32
		040	10.9	10.6	10.6	10.6	10.6	10.6	10.5	9.0	8.0	6.8
		050	37.9	30.0	28.4	25.1	23.0	21.5	19.4	16.6	14.8	12.6
		063	85.1	70.5	66.8	59.1	54.2	50.7	45.8	39.0	34.8	29.6
		080	164	161	161	153	140	131	118	101	90	76
		110	359	351	347	307	282	264	238	203	181	153
		140	950	717	679	601	551	515	464	395	352	296
		180	2100	1450	1370	1220	1110	1040	940	800	710	590
		250	5840	4150	3930	3480	3190	2980	2680	2270	2000	1620

● RGIS flange shaft (2 dwell)

Cam curve/MS

Index number	Total index angle (deg)	Size	Static rated output torque (N·m)	Rated dynamic output torque (N·m)								
				Input shaft rotational speed (rpm)								
				15	30	45	60	75	100	150	200	300
24	90	032	1.89	1.38	1.29	1.10	0.98	0.90	0.80	0.67	0.58	0.45
		040	7.19	6.13	5.70	4.86	4.33	3.95	3.49	2.88	2.42	1.64
		050	12.8	11.1	10.9	10.5	10.2	10.0	9.7	8.2	7.1	5.4
		063	25.3	21.2	20.9	20.1	19.5	19.1	18.5	17.5	15.9	12.1
		080	80.0	57.6	53.6	45.7	40.7	37.2	32.9	27.2	23.1	16.2
		110	200	119	110	94	83	76	67	53	43	22
		140	462	386	374	318	283	258	226	181	144	75
		180	976	602	559	473	417	375	318	226		
		250	2870	1710	1580	1330	1160	1030	840	490		
	120	032	1.89	1.49	1.41	1.21	1.08	0.99	0.88	0.74	0.65	0.50
		040	7.19	6.49	6.14	5.29	4.72	4.32	3.84	3.21	2.79	2.10
		050	12.8	11.7	11.7	11.4	11.1	10.9	10.6	9.0	7.9	6.4
		063	25.3	22.8	22.8	22.1	21.5	21.1	20.5	19.5	18.0	14.5
		080	108	82.5	78.1	67.2	60.0	55.0	48.9	41.3	36.2	28.8
		110	225	203	203	187	167	153	136	114	99	76
		140	462	414	409	352	314	286	254	210	178	125
		180	1220	844	798	685	609	554	486	389	310	160
		250	3910	2260	2140	1830	1620	1460	1260	950	660	
	150	032	2.70	2.21	2.09	1.84	1.64	1.50	1.34	1.14	1.01	0.85
		040	10.2	9.14	8.65	7.60	6.79	6.22	5.55	4.70	4.14	3.38
		050	12.8	12.1	12.1	12.0	11.7	11.4	11.1	9.5	8.4	7.0
		063	63.6	50.5	47.8	42.0	37.6	34.4	30.7	26.1	23.1	19.2
		080	108	85.5	80.9	71.1	63.5	58.2	51.9	44.0	38.9	31.9
		110	225	210	210	198	177	162	144	122	107	86
		140	462	429	424	373	333	304	270	226	196	150
		180	1220	876	828	727	647	591	522	429	359	240
		250	3910	2340	2210	1940	1720	1570	1370	1090	850	400
	180	032	2.70	2.25	2.13	1.89	1.70	1.56	1.39	1.19	1.06	0.89
		040	10.2	9.30	8.80	7.79	7.03	6.44	5.74	4.88	4.32	3.58
		050	12.8	12.3	12.3	12.3	12.1	11.8	11.5	9.8	8.7	7.3
		063	63.6	51.6	48.8	43.2	39.0	35.7	31.9	27.1	24.1	20.2
		080	108	87.3	82.6	73.1	66.0	60.4	53.9	45.8	40.6	33.8
		110	225	214	214	203	183	168	150	127	112	92
		140	462	438	433	384	346	316	282	237	208	166
		180	1490	1130	1070	950	850	780	690	580	500	380
		250	3910	2390	2260	2000	1790	1630	1440	1170	970	600
	210	032	2.70	2.28	2.16	1.91	1.75	1.61	1.43	1.22	1.09	0.92
		040	10.2	9.40	8.90	7.88	7.20	6.60	5.89	5.01	4.45	3.72
		050	12.8	12.4	12.4	12.4	12.4	12.1	11.8	10.1	9.0	7.6
		063	63.6	52.2	49.5	43.8	40.0	36.7	32.8	27.9	24.8	20.9
		080	152	101	95	85	77	71	63	54	48	40
		110	225	217	217	206	188	172	154	131	116	96
		140	760	541	512	453	414	379	338	286	253	206
		180	1490	1150	1080	960	880	800	710	600	520	410
		250	4150	2930	2770	2450	2240	2040	1810	1500	1280	920
	240	032	2.70	2.30	2.18	1.93	1.77	1.64	1.46	1.25	1.11	0.94
		040	10.2	9.47	8.96	7.93	7.28	6.73	6.01	5.12	4.55	3.82
		050	12.8	12.5	12.5	12.5	12.5	12.4	12.0	10.3	9.2	7.8
		063	63.6	52.7	49.9	44.2	40.5	37.5	33.5	28.5	25.4	21.5
		080	152	102	96	85	78	72	65	55	49	41
		110	225	219	219	208	190	176	157	134	119	99
		140	760	545	516	457	419	387	346	293	260	215
		180	1490	1160	1090	970	890	820	730	620	540	440
		250	4150	2950	2800	2470	2260	2090	1860	1550	1340	1010

Roller gear cam drive (standard housing)

Output torque table

● RGIS flange shaft (2 dwell)

Cam curve/MS

Index number	Total index angle (deg)	Size	Static rated output torque (N·m)	Rated dynamic output torque (N·m)								
				Input shaft rotational speed (rpm)								
				15	30	45	60	75	100	150	200	300
24	270	032	2.70	2.32	2.20	1.94	1.78	1.67	1.49	1.27	1.13	0.96
		040	10.2	9.51	9.01	7.97	7.31	6.84	6.11	5.20	4.63	3.91
		050	37.9	29.9	28.3	25.1	23.0	21.5	19.2	16.4	14.6	12.4
		063	63.6	53.0	50.2	44.4	40.7	38.1	34.0	29.0	25.9	21.9
		080	152	102	97	86	79	74	66	56	50	42
		110	225	220	220	209	191	179	160	136	121	102
		140	760	549	520	460	422	394	352	299	265	221
		180	1490	1160	1100	970	890	830	740	630	560	450
		250	4150	2970	2810	2490	2280	2130	1890	1590	1380	1080
	300	032	2.70	2.33	2.21	1.95	1.79	1.67	1.51	1.29	1.15	0.98
		040	10.2	9.55	9.04	8.00	7.34	6.86	6.19	5.27	4.70	3.97
		050	37.9	30.1	28.5	25.2	23.1	21.6	19.5	16.6	14.8	12.6
		063	63.6	53.2	50.4	44.6	40.9	38.3	34.5	29.4	26.2	22.3
		080	152	103	97	86	79	74	67	57	51	43
		110	331	289	274	242	222	208	187	160	142	120
		140	760	551	522	462	424	396	357	304	270	226
		180	1490	1170	1110	980	900	840	750	640	570	470
		250	4150	2980	2820	2500	2290	2140	1920	1620	1420	1120
	330	032	2.70	2.34	2.21	1.96	1.80	1.68	1.53	1.30	1.16	0.99
		040	10.2	9.57	9.06	8.02	7.36	6.88	6.26	5.33	4.76	4.03
		050	37.9	30.2	28.5	25.3	23.2	21.7	19.7	16.8	15.0	12.8
		063	63.6	53.4	50.5	44.7	41.0	38.4	34.9	29.8	26.6	22.6
		080	152	103	98	86	79	74	67	57	51	44
		110	331	290	275	243	223	209	190	162	144	122
		140	760	553	524	463	425	397	361	307	273	230
		180	1490	1170	1110	980	900	840	760	650	580	480
		250	4150	2990	2830	2510	2300	2150	1950	1640	1440	1160
30	90	080	31.8	28.4	28.2	27.1	26.3	25.7	24.8	23.3	20.8	15.0
		110	143	109	102	87	78	71	62	50	41	24
		140	285	254	252	230	204	186	163	130	103	51
		180	591	523	512	434	383	346	296	217	142	
		250	2020	1440	1350	1130	990	880	720	440		
	120	080	80.0	63.7	60.3	52.5	46.8	42.9	38.2	32.2	28.2	22.5
		110	200	130	123	107	95	87	77	64	55	41
		140	285	266	266	248	221	202	178	147	124	85
		180	591	550	543	471	418	380	332	263	207	95
		250	2020	1510	1420	1230	1090	980	840	620	410	
	150	080	80.0	65.2	61.7	54.6	48.9	44.8	40.0	33.9	29.9	24.5
		110	200	133	126	111	100	91	81	68	59	47
		140	420	357	338	299	268	245	217	182	158	121
		180	976	688	651	575	514	469	414	340	285	190
		250	2020	1540	1460	1290	1140	1040	910	710	540	210

● RGIS flange shaft (2 dwell)

Cam curve/MS

Index number	Total index angle (deg)	Size	Static rated output torque (N·m)	Rated dynamic output torque (N·m)								
				Input shaft rotational speed (rpm)								
				15	30	45	60	75	100	150	200	300
30	180	080	80.0	66.1	62.5	55.4	50.4	46.2	41.2	35.0	31.0	25.8
		110	200	134	127	113	102	94	84	71	62	50
		140	420	362	342	303	276	252	225	190	166	132
		180	976	698	660	584	531	485	430	358	307	224
		250	2020	1560	1480	1300	1180	1080	950	760	620	350
	210	080	80.0	66.6	63.1	55.8	51.2	47.2	42.2	35.9	31.9	26.7
		110	200	135	128	113	104	96	85	72	64	53
		140	420	365	345	306	280	258	230	195	172	140
		180	976	704	666	589	539	497	442	370	321	247
		250	2870	1980	1880	1660	1520	1400	1240	1020	860	600
	240	080	80.0	67.0	63.4	56.1	51.5	48.1	42.9	36.6	32.5	27.4
		110	200	136	129	114	104	98	87	74	65	54
		140	420	367	347	307	282	263	235	199	176	145
		180	976	708	670	593	543	507	451	380	332	262
		250	2870	1990	1890	1670	1530	1420	1260	1050	900	670
	270	080	80.0	67.2	63.6	56.3	51.7	48.3	43.6	37.1	33.1	27.9
		110	200	136	129	114	105	98	88	75	67	56
		140	420	368	349	309	283	264	238	202	179	149
		180	976	710	672	595	545	509	458	387	340	274
		250	2870	2000	1890	1680	1530	1430	1280	1080	930	720
	300	080	80.0	67.4	63.8	56.5	51.8	48.4	44.1	37.6	33.5	28.4
		110	200	137	129	115	105	98	89	76	68	57
		140	420	369	349	309	284	265	241	205	182	152
		180	976	712	674	597	547	511	465	393	347	283
		250	2870	2010	1900	1680	1540	1440	1300	1100	960	750
	330	080	80.0	67.5	63.9	56.6	51.9	48.5	44.5	38.0	33.9	28.7
		110	200	137	130	115	105	98	90	77	68	58
		140	420	370	350	310	284	266	244	208	185	155
		180	976	714	676	598	548	512	469	399	352	290
		250	2870	2010	1900	1680	1540	1440	1320	1110	980	780
32	90	080	31.8	28.7	28.6	27.5	26.7	26.1	25.2	23.7	21.3	15.6
		110	143	110	104	89	79	72	63	51	42	25
		140	285	257	256	233	208	189	166	133	106	56
		180	591	530	521	442	390	352	303	224	152	
		250	1630	1140	1070	900	780	690	560	320		
	120	080	31.8	30.0	29.9	29.5	28.7	28.1	27.2	25.9	23.8	18.8
		110	143	115	108	94	84	77	68	57	49	36
		140	285	268	268	251	223	204	181	149	127	89
		180	591	554	547	476	423	385	337	269	213	105
		250	2020	1520	1430	1240	1100	990	850	640	430	
	150	080	31.8	30.6	30.6	30.6	29.9	29.3	28.5	27.2	25.2	20.5
		110	143	117	110	98	88	80	71	60	52	41
		140	285	274	274	260	233	213	190	159	137	105
		180	591	567	560	495	443	404	357	292	244	159
		250	2020	1550	1470	1290	1150	1050	920	720	560	240
	180	080	80.0	66.3	62.8	55.6	50.8	46.5	41.5	35.3	31.3	26.0
		110	143	118	112	99	90	83	74	62	55	44
		140	285	277	277	263	240	220	196	165	144	115
		180	591	574	567	501	457	418	370	308	263	190
		250	2020	1570	1480	1310	1190	1090	960	770	630	370
	210	080	80.0	66.8	63.2	56.0	51.3	47.5	42.4	36.1	32.1	26.9
		110	200	136	128	114	104	96	86	73	64	53
		140	285	279	279	265	243	225	200	169	149	121
		180	591	578	571	505	463	428	380	318	276	210
		250	2020	1580	1490	1320	1210	1110	980	810	680	460

Product specifications
Roller gear cam drive
Compact
Standard
Table
Wide angle
Basic
Parallel cam drive
Pick and Place drive
Circular
Linear
Option

Roller gear cam drive (standard housing)

Output torque table

● RGIS flange shaft (2 dwell)

Cam curve/MS

Index number	Total index angle (deg)	Size	Static rated output torque (N·m)	Rated dynamic output torque (N·m)								
				Input shaft rotational speed (rpm)								
				15	30	45	60	75	100	150	200	300
32	240	080	80.0	67.1	63.5	56.2	51.6	48.2	43.2	36.8	32.7	27.6
		110	200	136	129	114	105	98	87	74	66	55
		140	285	281	281	266	244	228	204	173	153	126
		180	591	581	574	508	466	435	388	326	285	224
		250	2020	1590	1500	1330	1210	1130	1010	840	710	520
	270	080	80.0	67.3	63.7	56.4	51.8	48.4	43.8	37.3	33.2	28.1
		110	200	137	129	114	105	98	89	75	67	56
		140	285	282	282	267	245	229	207	176	156	129
		180	976	712	674	596	546	510	461	389	342	277
		250	2020	1590	1510	1330	1220	1140	1020	860	740	560
	300	080	80.0	67.5	63.9	56.6	51.9	48.5	44.3	37.8	33.7	28.5
		110	200	137	130	115	105	98	90	76	68	57
		140	285	282	282	268	246	230	210	178	158	132
		180	976	714	675	598	548	512	467	395	349	285
		250	2020	1600	1510	1340	1220	1140	1040	870	760	590
	330	080	80.0	67.6	64.0	56.7	52.0	48.6	44.6	38.2	34.1	28.9
		110	200	137	130	115	105	98	90	77	69	58
		140	285	283	283	268	246	230	211	180	160	134
		180	976	715	677	599	549	513	470	400	354	292
		250	2020	1600	1510	1340	1230	1140	1050	880	770	610

Roller gear cam drive (standard housing)

Output torque table

Index series

● RGIS flange shaft (3 dwell)

Cam curve/MS

Index number	Total index angle (deg)	Size	Static rated output torque (N·m)	Rated dynamic output torque (N·m)								
				Input shaft rotational speed (rpm)								
				10	20	30	40	50	70	100	140	200
24	150	025	1.49	1.12	1.06	0.93	0.83	0.76	0.67	0.58	0.50	0.43
		032	2.70	2.04	1.93	1.70	1.52	1.39	1.22	1.05	0.92	0.78
		040	10.9	9.39	9.39	9.32	9.08	8.89	8.52	7.38	6.40	5.43
		050	19.9	17.3	17.3	17.2	16.7	16.4	15.9	15.3	14.0	11.9
		063	85.1	62.3	59.0	51.9	46.4	42.5	37.2	32.2	28.0	23.9
		080	164	142	142	134	120	109	96	83	72	62
		110	591	378	358	314	281	257	225	194	168	141
		140	1160	798	755	664	593	542	474	408	349	287
		180	2860	1580	1490	1310	1170	1070	930	790	670	510
		250	5840	3680	3480	3050	2720	2480	2140	1780	1410	910
	180	025	2.89	2.26	2.14	1.90	1.71	1.57	1.37	1.19	1.04	0.90
		032	4.77	3.75	3.55	3.14	2.83	2.60	2.28	1.98	1.73	1.49
		040	30.6	22.2	21.0	18.6	16.8	15.4	13.5	11.7	10.2	8.8
		050	50.1	38.5	36.5	32.3	29.1	26.7	23.4	20.3	17.8	15.3
		063	85.1	64.9	61.4	54.4	49.1	45.0	39.4	34.2	29.8	25.6
		080	242	194	183	162	146	134	117	102	89	77
		110	591	393	372	330	297	272	238	206	179	152
		140	1160	832	787	697	628	575	503	435	376	315
		180	2860	1640	1560	1380	1240	1140	990	850	720	590
		250	5840	3830	3620	3200	2880	2630	2280	1930	1590	1170
	210	025	2.89	2.33	2.20	1.95	1.78	1.63	1.43	1.25	1.09	0.94
		032	4.77	3.85	3.65	3.23	2.95	2.71	2.37	2.06	1.80	1.56
		040	30.6	22.8	21.6	19.1	17.5	16.0	14.0	12.2	10.7	9.2
		050	50.1	39.5	37.4	33.1	30.3	27.8	24.3	21.2	18.5	16.0
		063	85.1	66.6	63.0	55.8	51.1	46.8	41.0	35.6	31.1	26.8
		080	242	199	188	166	152	140	122	106	93	80
		110	738	527	498	441	404	370	324	281	245	210
		140	1640	1060	1010	890	820	750	650	570	490	420
		180	2860	1690	1600	1410	1290	1180	1030	890	770	630
		250	5840	3930	3720	3290	3000	2740	2390	2040	1710	1330
	240	025	2.89	2.37	2.24	1.99	1.82	1.69	1.48	1.29	1.12	0.97
		032	4.77	3.92	3.71	3.29	3.02	2.79	2.45	2.13	1.86	1.61
		040	30.6	23.2	22.0	19.5	17.9	16.5	14.5	12.6	11.0	9.5
		050	50.1	40.2	38.1	33.7	30.9	28.6	25.1	21.8	19.1	16.5
		063	85.1	67.8	64.2	56.8	52.1	48.2	42.2	36.7	32.1	27.7
		080	262	246	243	216	198	183	160	139	122	106
		110	738	536	507	449	412	381	334	290	253	218
		140	1640	1080	1030	910	830	770	670	590	510	440
		180	2860	1720	1630	1440	1320	1220	1070	920	800	670
		250	5840	4000	3780	3350	3060	2830	2470	2120	1800	1440
	270	025	2.89	2.40	2.27	2.01	1.85	1.73	1.51	1.32	1.15	1.00
		032	4.77	3.97	3.76	3.33	3.06	2.86	2.51	2.18	1.91	1.66
		040	30.6	23.5	22.3	19.7	18.1	16.9	14.8	12.9	11.3	9.8
		050	50.1	40.7	38.5	34.1	31.3	29.3	25.6	22.3	19.5	16.9
		063	85.1	68.6	65.0	57.5	52.8	49.3	43.2	37.6	32.9	28.5
		080	262	249	246	218	200	187	164	143	125	108
		110	738	542	514	455	417	390	342	297	259	224
		140	1640	1100	1040	920	840	790	690	600	520	450
		180	2860	1740	1650	1460	1340	1250	1090	950	820	690
		250	5840	4040	3830	3390	3100	2900	2530	2180	1860	1520

● RGIS flange shaft (3 dwell)

Cam curve/MS

Index number	Total index angle (deg)	Size	Static rated output torque (N·m)	Rated dynamic output torque (N·m)								
				Input shaft rotational speed (rpm)								
				10	20	30	40	50	70	100	140	200
24	300	025	2.89	2.43	2.30	2.03	1.87	1.74	1.54	1.34	1.18	1.02
		032	4.77	4.01	3.80	3.36	3.09	2.89	2.55	2.22	1.95	1.69
		040	30.6	23.7	22.5	19.9	18.2	17.1	15.1	13.1	11.5	10.0
		050	50.1	41.1	38.9	34.4	31.6	29.5	26.1	22.7	19.9	17.3
		063	85.1	69.2	65.5	58.0	53.2	49.8	44.1	38.3	33.5	29.1
		080	262	252	249	220	202	189	167	145	127	110
		110	738	547	518	459	421	393	348	303	265	229
		140	1640	1110	1050	930	850	800	700	610	530	460
		180	2860	1760	1660	1470	1350	1260	1120	970	840	720
		250	5840	4080	3860	3420	3130	2930	2580	2230	1920	1590
	330	025	2.89	2.44	2.31	2.05	1.88	1.76	1.57	1.36	1.20	1.04
		032	4.77	4.04	3.83	3.39	3.11	2.91	2.59	2.26	1.98	1.72
		040	30.6	23.9	22.6	20.0	18.4	17.2	15.3	13.3	11.7	10.1
		050	50.1	41.3	39.1	34.6	31.8	29.7	26.5	23.1	20.2	17.5
		063	85.1	69.7	66.0	58.4	53.6	50.1	44.7	38.9	34.1	29.5
		080	262	253	250	222	203	190	170	148	129	112
		110	738	551	522	462	424	396	354	307	269	233
		140	1640	1120	1060	940	860	800	720	620	540	470
		180	2860	1770	1680	1480	1360	1270	1130	980	860	730
		250	5840	4110	3890	3440	3150	2950	2620	2270	1960	1640
30	120	040	10.9	9.39	9.39	9.22	8.98	8.8	8.43	7.29	6.31	5.3
		050	22.8	19.7	19.7	19.4	18.8	17.9	15.7	13.6	11.8	10.0
		063	63.6	46.9	44.4	38.6	34.5	31.6	27.6	23.9	20.6	17.3
		080	152	90.4	85.6	74.4	66.5	60.9	53.2	45.9	39.6	32.9
		110	359	311	307	267	238	218	191	164	141	116
		140	760	483	457	398	355	324	282	240	201	154
		180	1490	1020	970	840	750	680	590	490	400	270
		250	4150	2630	2490	2160	1920	1740	1480	1190	860	370
	150	025	1.49	1.18	1.11	0.99	0.88	0.81	0.71	0.61	0.53	0.46
		032	3.66	2.90	2.75	2.43	2.18	2.00	1.75	1.52	1.33	1.14
		040	10.9	9.85	9.85	9.85	9.62	9.42	9.04	7.84	6.82	5.82
		050	37.9	27.8	26.3	23.3	20.9	19.2	16.8	14.6	12.7	10.9
		063	85.1	65.4	61.9	54.8	49.1	45.0	39.4	34.2	29.8	25.5
		080	152	94.9	89.8	79.5	71.2	65.2	57.1	49.4	42.9	36.4
		110	359	326	322	285	255	234	205	177	153	129
		140	950	663	627	555	497	455	397	342	294	242
		180	2100	1340	1270	1120	1000	920	800	680	570	450
		250	4150	2760	2610	2310	2060	1880	1620	1350	1060	680
	180	025	2.13	1.73	1.64	1.45	1.32	1.21	1.06	0.92	0.81	0.70
		032	3.66	2.99	2.83	2.51	2.28	2.09	1.83	1.59	1.39	1.20
		040	10.9	10.1	10.1	10.1	10.1	9.9	9.5	8.2	7.2	6.2
		050	37.9	28.6	27.1	24.0	21.8	20.0	17.5	15.2	13.3	11.5
		063	85.1	67.2	63.6	56.4	51.3	47.1	41.2	35.8	31.3	26.9
		080	152	97.6	92.4	81.8	74.5	68.2	59.8	51.8	45.1	38.6
		110	359	335	331	293	267	244	214	186	161	137
		140	950	682	646	571	520	477	417	360	311	261
		180	2100	1380	1310	1160	1050	960	840	720	620	500
		250	4150	2840	2680	2370	2160	1970	1710	1440	1180	860

Roller gear cam drive (standard housing)

Output torque table

● RGIS flange shaft (3 dwell)

Cam curve/MS

Index number	Total index angle (deg)	Size	Static rated output torque (N·m)	Rated dynamic output torque (N·m)								
				Input shaft rotational speed (rpm)								
				10	20	30	40	50	70	100	140	200
30	210	025	2.13	1.77	1.67	1.48	1.36	1.25	1.10	0.96	0.84	0.72
		032	3.66	3.05	2.88	2.55	2.34	2.16	1.89	1.65	1.44	1.25
		040	10.9	10.3	10.3	10.3	10.3	10.2	9.8	8.5	7.4	6.4
		050	37.9	29.1	27.5	24.4	22.4	20.6	18.1	15.7	13.7	11.9
		063	85.1	68.4	64.8	57.4	52.6	48.6	42.6	37.0	32.3	27.9
		080	164	156	156	148	136	125	110	95	83	72
		110	359	341	337	298	273	252	221	192	167	143
		140	950	695	657	582	534	492	431	373	324	275
		180	2100	1410	1330	1180	1080	1000	870	750	650	540
		250	4150	2890	2730	2420	2210	2040	1770	1510	1270	980
	240	025	2.13	1.79	1.70	1.50	1.38	1.29	1.13	0.98	0.86	0.74
		032	3.66	3.08	2.92	2.58	2.37	2.22	1.94	1.69	1.48	1.28
		040	10.9	10.4	10.4	10.4	10.4	10.4	10.0	8.7	7.6	6.6
		050	37.9	29.4	27.9	24.7	22.6	21.1	18.5	16.1	14.1	12.2
		063	85.1	69.2	65.5	58.0	53.2	49.7	43.6	37.9	33.2	28.7
		080	164	158	158	150	137	128	113	98	86	74
		110	359	345	341	302	277	258	226	197	172	148
		140	950	703	666	589	540	505	442	383	334	285
		180	2100	1420	1350	1190	1090	1020	890	770	670	560
		250	5840	4080	3860	3420	3130	2920	2550	2190	1870	1530
	270	025	2.13	1.81	1.71	1.51	1.39	1.30	1.15	1.00	0.88	0.76
		032	3.66	3.11	2.94	2.61	2.39	2.24	1.98	1.72	1.51	1.31
		040	10.9	10.5	10.5	10.5	10.5	10.5	10.2	8.9	7.8	6.7
		050	37.9	29.7	28.1	24.9	22.8	21.3	18.9	16.4	14.4	12.5
		063	85.1	69.8	66.1	58.5	53.7	50.2	44.4	38.6	33.8	29.3
		080	164	159	159	151	139	130	115	100	87	76
		110	359	347	344	304	279	261	231	201	175	151
		140	950	709	671	594	545	510	451	391	341	292
		180	2100	1430	1360	1200	1100	1030	910	790	680	580
		250	5840	4110	3890	3450	3160	2950	2600	2240	1930	1600
	300	025	2.13	1.82	1.72	1.52	1.40	1.31	1.17	1.02	0.89	0.77
		032	3.66	3.13	2.96	2.62	2.41	2.25	2.01	1.75	1.53	1.33
		040	10.9	10.6	10.6	10.6	10.6	10.6	10.4	9.0	7.9	6.8
		050	37.9	29.8	28.2	25.0	22.9	21.4	19.2	16.7	14.6	12.7
		063	85.1	70.2	66.5	58.9	54.0	50.5	45.1	39.2	34.4	29.8
		080	164	160	160	152	139	130	116	101	89	77
		110	359	349	346	306	281	262	234	204	178	154
		140	950	713	675	598	548	513	458	398	347	299
		180	2100	1440	1370	1210	1110	1040	930	800	700	590
		250	5840	4140	3920	3470	3180	2970	2650	2290	1970	1650
	330	025	2.13	1.83	1.73	1.53	1.41	1.31	1.19	1.03	0.90	0.78
		032	3.66	3.14	2.98	2.64	2.42	2.26	2.04	1.77	1.55	1.35
		040	10.9	10.6	10.6	10.6	10.6	10.6	10.5	9.1	8.0	6.9
		050	37.9	30.0	28.4	25.1	23.0	21.5	19.4	16.9	14.8	12.8
		063	85.1	70.5	66.8	59.1	54.2	50.7	45.7	39.8	34.8	30.2
		080	164	161	161	153	140	131	118	103	90	78
		110	359	351	347	307	282	264	238	207	181	156
		140	950	717	679	601	551	515	464	403	352	304
		180	2100	1450	1370	1220	1110	1040	940	810	710	610
		250	5840	4160	3930	3480	3190	2980	2680	2320	2010	1690

● RGIS flange shaft (3 dwell)

Cam curve/MS

Index number	Total index angle (deg)	Size	Static rated output torque (N·m)	Rated dynamic output torque (N·m)								
				Input shaft rotational speed (rpm)								
				10	20	30	40	50	70	100	140	200
36	90	040	7.19	6.13	5.80	4.95	4.42	4.04	3.51	2.99	2.50	1.91
		050	13.1	10.2	9.6	8.2	7.3	6.7	5.8	5.0	4.2	3.3
		063	16.4	14.1	14.1	13.6	13.2	12.9	12.3	10.5	8.8	6.8
		080	80.0	57.6	54.5	46.6	41.5	38.0	33.1	28.2	23.7	18.5
		110	200	119	112	96	85	78	67	56	45	31
		140	420	315	298	254	226	206	177	147	115	72
		180	976	603	569	484	429	388	327	256	172	
		250	2020	1370	1290	1090	950	850	680	460		
	120	032	2.70	2.13	2.01	1.77	1.58	1.45	1.27	1.10	0.95	0.81
		040	10.2	8.87	8.40	7.37	6.58	6.02	5.26	4.54	3.91	3.26
		050	12.8	11.7	11.7	11.6	11.3	11.1	10.6	9.2	8.0	6.7
		063	25.3	22.8	22.8	22.5	22.0	21.5	20.8	20.0	18.1	15.3
		080	108	82.5	78.1	68.5	61.2	56.0	49.0	42.3	36.5	30.5
		110	225	203	203	190	170	156	136	117	100	82
		140	462	414	409	359	320	293	255	217	183	142
		180	1220	844	799	699	623	568	491	411	330	222
		250	3910	2260	2140	1870	1660	1510	1280	1040	760	340
	150	032	2.70	2.21	2.09	1.85	1.67	1.53	1.34	1.16	1.02	0.87
		040	10.2	9.14	8.65	7.66	6.92	6.34	5.55	4.80	4.17	3.53
		050	12.8	12.1	12.1	12.1	11.9	11.7	11.2	9.7	8.4	7.2
		063	63.6	50.5	47.8	42.4	38.3	35.1	30.7	26.6	23.2	19.8
		080	108	85.5	80.9	71.7	64.7	59.3	51.9	45.0	39.1	33.2
		110	225	210	210	199	180	165	144	125	108	90
		140	462	429	424	376	339	310	271	233	199	163
		180	1220	876	829	733	661	604	525	446	372	282
		250	3910	2340	2220	1960	1760	1610	1380	1150	920	590
	180	032	2.70	2.25	2.13	1.89	1.73	1.59	1.39	1.21	1.06	0.91
		040	10.2	9.30	8.80	7.79	7.15	6.56	5.75	4.98	4.34	3.71
		050	12.8	12.3	12.3	12.3	12.3	12.1	11.6	10.0	8.8	7.5
		063	63.6	51.6	48.8	43.2	39.6	36.4	31.9	27.7	24.2	20.8
		080	108	87.3	82.6	73.2	67.1	61.6	53.9	46.8	40.8	34.9
		110	225	214	214	203	186	171	150	130	113	96
		140	760	534	505	447	410	376	329	284	246	206
		180	1490	1130	1070	950	870	800	690	600	510	410
		250	3910	2390	2260	2000	1830	1670	1450	1230	1010	740
	210	032	2.70	2.28	2.16	1.91	1.76	1.63	1.43	1.25	1.09	0.94
		040	10.2	9.40	8.90	7.88	7.23	6.72	5.89	5.11	4.46	3.83
		050	12.8	12.4	12.4	12.4	12.4	12.4	11.9	10.3	9.0	7.8
		063	63.6	52.2	49.5	43.8	40.2	37.4	32.8	28.5	24.9	21.5
		080	152	101	95	85	78	72	63	55	48	41
		110	331	284	269	238	218	203	178	154	135	115
		140	760	541	512	453	415	387	338	293	254	215
		180	1490	1150	1080	960	880	820	710	620	530	440
		250	4150	2930	2770	2450	2250	2090	1820	1550	1310	1040
	240	032	2.70	2.30	2.18	1.93	1.77	1.66	1.46	1.27	1.11	0.97
		040	10.2	9.47	8.96	7.93	7.28	6.80	6.01	5.22	4.56	3.93
		050	12.8	12.5	12.5	12.5	12.5	12.5	12.1	10.5	9.2	7.9
		063	63.6	52.7	49.9	44.2	40.5	37.9	33.4	29.1	25.4	22.0
		080	152	102	96	85	78	73	65	56	49	42
		110	331	286	271	240	220	206	182	158	138	118
		140	760	545	516	457	419	392	346	300	261	223
		180	1490	1160	1090	970	890	830	730	630	550	460
		250	4150	2950	2800	2470	2270	2120	1860	1600	1360	1100

Output torque table

● RGIS flange shaft (3 dwell)

Cam curve/MS

Index number	Total index angle (deg)	Size	Static rated output torque (N·m)	Rated dynamic output torque (N·m)								
				Input shaft rotational speed (rpm)								
				10	20	30	40	50	70	100	140	200
36	270	032	2.70	2.32	2.20	1.94	1.78	1.67	1.49	1.29	1.13	0.98
		040	10.2	9.51	9.01	7.97	7.31	6.84	6.10	5.30	4.64	4.01
		050	12.8	12.6	12.6	12.6	12.6	12.6	12.3	10.7	9.3	8.1
		063	63.6	53.0	50.2	44.4	40.7	38.1	34.0	29.6	25.9	22.4
		080	152	102	97	86	79	74	66	57	50	43
		110	331	288	273	241	221	207	185	160	140	121
		140	760	549	520	460	422	394	352	305	266	228
		180	1490	1160	1100	970	890	840	740	640	560	470
		250	4150	2970	2810	2490	2280	2130	1890	1630	1400	1150
	300	032	2.70	2.33	2.21	1.95	1.79	1.68	1.51	1.31	1.15	1.00
		040	10.2	9.55	9.04	8.00	7.34	6.86	6.18	5.37	4.70	4.07
		050	12.8	12.6	12.6	12.6	12.6	12.6	12.4	10.8	9.5	8.2
		063	63.6	53.2	50.4	44.6	40.9	38.3	34.5	30.0	26.3	22.8
		080	152	103	97	86	79	74	67	58	51	44
		110	331	289	274	242	222	208	187	163	142	123
		140	760	551	522	462	424	396	357	310	270	232
		180	1490	1170	1110	980	900	840	760	650	570	480
		250	4150	2980	2820	2500	2290	2140	1920	1660	1430	1190
	330	032	2.70	2.34	2.21	1.96	1.80	1.68	1.52	1.33	1.16	1.01
		040	10.2	9.57	9.06	8.02	7.36	6.88	6.22	5.44	4.76	4.12
		050	12.8	12.6	12.6	12.6	12.6	12.6	12.5	10.9	9.6	8.3
		063	63.6	53.4	50.5	44.7	41.0	38.4	34.7	30.3	26.6	23.1
		080	152	103	98	86	79	74	67	59	51	44
		110	331	290	275	243	223	209	188	165	144	125
		140	760	553	524	464	425	397	359	314	274	236
		180	1490	1170	1110	980	900	840	760	660	580	490
		250	4150	2990	2830	2510	2300	2150	1940	1680	1460	1220
48	90	080	31.8	28.7	28.7	28.1	27.3	26.7	25.7	24.5	21.8	17.4
		110	143	110	104	90	80	73	64	54	44	32
		140	285	257	257	238	212	194	167	140	113	77
		180	591	530	523	451	401	363	309	248	178	
		250	1630	1150	1080	930	810	730	590	410		
	120	080	31.8	30.0	30.0	29.9	29.3	28.6	27.7	26.6	24.0	20.0
		110	143	115	108	96	86	79	69	59	50	40
		140	285	268	268	254	228	208	181	155	130	101
		180	591	555	548	484	433	394	340	284	227	151
		250	2020	1520	1440	1270	1130	1020	870	700	510	210
	150	080	31.8	30.6	30.6	30.6	30.5	29.9	28.9	27.9	25.3	21.5
		110	143	117	110	98	89	82	72	62	53	44
		140	285	274	274	260	238	218	190	163	140	114
		180	591	567	560	495	452	413	359	305	253	190
		250	2020	1550	1470	1300	1180	1080	930	770	600	380
	180	080	80.0	66.3	62.8	55.6	51.0	47.4	41.5	36.0	31.4	26.9
		110	143	118	112	99	91	84	74	64	55	46
		140	285	277	277	263	241	224	196	169	146	122
		180	591	574	567	502	459	426	372	318	269	213
		250	2020	1570	1480	1310	1200	1110	960	810	660	480
	210	080	80.0	66.8	63.2	56.0	51.3	48.0	42.4	36.8	32.2	27.7
		110	200	136	128	114	104	97	86	75	65	55
		140	285	279	279	265	243	227	200	173	150	127
		180	591	578	572	506	463	433	381	328	280	228
		250	2020	1580	1490	1320	1210	1130	990	840	700	540

● RGIS flange shaft (3 dwell)

Cam curve/MS

Index number	Total index angle (deg)	Size	Static rated output torque (N·m)	Rated dynamic output torque (N·m)								
				Input shaft rotational speed (rpm)								
				10	20	30	40	50	70	100	140	200
48	240	080	80.0	67.1	63.5	56.2	51.6	48.2	43.1	37.5	32.8	28.3
		110	200	136	129	114	105	98	87	76	66	57
		140	285	281	281	266	244	228	204	177	154	131
		180	591	581	574	508	466	435	388	335	288	239
		250	2020	1590	1500	1330	1220	1140	1010	860	730	580
	270	080	80.0	67.3	63.7	56.4	51.8	48.4	43.7	38.0	33.3	28.8
		110	200	137	129	114	105	98	89	77	67	58
		140	285	282	282	267	245	229	207	180	156	134
		180	976	712	674	596	547	511	461	399	345	291
		250	2020	1590	1510	1330	1220	1140	1030	880	750	610
	300	080	80.0	67.5	63.9	56.6	51.9	48.5	43.8	38.5	33.7	29.2
		110	200	137	130	115	105	98	89	78	68	59
		140	285	282	282	268	246	230	207	182	159	136
		180	976	714	675	598	548	512	462	404	351	298
		250	2020	1600	1510	1340	1220	1140	1030	900	770	630
	330	080	80.0	67.6	64.0	56.7	52.0	48.6	43.9	38.9	34.1	29.5
		110	200	137	130	115	105	99	89	79	69	59
		140	285	283	283	268	246	230	208	184	161	138
		180	976	715	677	599	549	513	463	409	356	303
		250	2020	1600	1510	1340	1230	1150	1030	910	780	650

Roller gear cam drive (standard housing)

Output torque table

● RGIS flange shaft (4 dwell)

Cam curve/MS

Index number	Total index angle (deg)	Size	Static rated output torque (N·m)	Rated dynamic output torque (N·m)								
				Input shaft rotational speed (rpm)								
				10	15	20	30	40	50	75	100	150
32	180	025	1.49	1.17	1.10	1.01	0.89	0.80	0.73	0.62	0.55	0.47
		032	2.70	2.13	2.01	1.85	1.63	1.45	1.33	1.14	1.01	0.86
		040	10.9	9.78	9.78	9.78	9.74	9.48	9.29	7.95	7.08	5.96
		050	50.1	38.5	36.5	33.5	29.5	26.4	24.2	20.6	18.4	15.6
		063	85.1	64.9	61.4	56.4	49.7	44.4	40.7	34.7	30.9	26.1
		080	164	148	148	145	128	115	105	89	80	67
		110	591	393	372	341	301	269	246	210	186	156
		140	1160	832	787	722	637	568	520	442	391	324
		180	2860	1640	1560	1430	1260	1120	1030	870	760	610
		250	5840	3830	3620	3320	2920	2600	2370	1980	1710	1280
	210	025	2.89	2.33	2.20	2.02	1.79	1.61	1.48	1.26	1.13	0.96
		032	4.77	3.85	3.65	3.35	2.96	2.67	2.45	2.09	1.87	1.59
		040	30.6	22.8	21.6	19.8	17.5	15.8	14.5	12.4	11.0	9.4
		050	50.1	39.5	37.4	34.3	30.4	27.4	25.1	21.4	19.1	16.2
		063	85.1	66.6	63.0	57.8	51.2	46.2	42.4	36.1	32.2	27.3
		080	242	199	188	172	153	138	126	108	96	81
		110	738	527	498	457	405	365	335	285	254	214
		140	1640	1060	1010	920	820	740	680	580	510	430
		180	2860	1690	1600	1470	1300	1170	1070	910	800	660
		250	5840	3930	3720	3410	3010	2710	2480	2080	1820	1420
	240	025	2.89	2.37	2.24	2.06	1.82	1.67	1.53	1.30	1.16	0.99
		032	4.77	3.92	3.71	3.41	3.02	2.76	2.53	2.16	1.93	1.64
		040	30.6	23.2	22.0	20.2	17.9	16.3	15.0	12.8	11.4	9.7
		050	50.1	40.2	38.1	34.9	30.9	28.3	25.9	22.1	19.7	16.8
		063	85.1	67.8	64.2	58.9	52.1	47.6	43.6	37.2	33.2	28.2
		080	262	246	243	223	198	181	166	141	126	107
		110	738	536	507	465	412	376	345	294	262	222
		140	1640	1080	1030	940	830	760	700	590	530	450
		180	2860	1720	1630	1490	1320	1210	1100	940	830	690
		250	5840	4000	3780	3470	3070	2800	2560	2160	1890	1520
	270	025	2.89	2.40	2.27	2.09	1.85	1.69	1.56	1.33	1.19	1.01
		032	4.77	3.97	3.76	3.45	3.06	2.80	2.59	2.21	1.97	1.68
		040	30.6	23.5	22.3	20.4	18.1	16.6	15.3	13.1	11.7	9.9
		050	50.1	40.7	38.5	35.3	31.3	28.7	26.5	22.6	20.2	17.2
		063	85.1	68.6	65.0	59.6	52.8	48.4	44.7	38.1	34.0	28.9
		080	262	249	246	226	200	184	169	145	129	110
		110	738	542	514	471	417	382	353	301	268	228
		140	1640	1100	1040	950	840	770	710	610	540	460
		180	2860	1740	1650	1510	1340	1230	1130	960	850	710
		250	5840	4040	3830	3510	3110	2840	2620	2220	1950	1590
	300	025	2.89	2.43	2.30	2.11	1.87	1.71	1.59	1.36	1.22	1.04
		032	4.77	4.01	3.80	3.49	3.09	2.83	2.64	2.25	2.01	1.71
		040	30.6	23.7	22.5	20.6	18.2	16.7	15.6	13.3	11.9	10.1
		050	50.1	41.1	38.9	35.7	31.6	29.0	27.0	23.0	20.6	17.5
		063	85.1	69.2	65.5	60.1	53.2	48.8	45.5	38.8	34.7	29.5
		080	262	252	249	228	202	185	173	147	132	112
		110	738	547	518	475	421	386	360	307	274	232
		140	1640	1110	1050	960	850	780	730	620	550	470
		180	2860	1760	1660	1530	1350	1240	1150	980	870	730
		250	5840	4080	3860	3540	3130	2870	2670	2260	2000	1640

● RGIS flange shaft (4 dwell)

Cam curve/MS

Index number	Total index angle (deg)	Size	Static rated output torque (N·m)	Rated dynamic output torque (N·m)								
				Input shaft rotational speed (rpm)								
				10	15	20	30	40	50	75	100	150
32	330	025	2.89	2.44	2.31	2.12	1.88	1.72	1.61	1.38	1.24	1.05
		032	4.77	4.04	3.83	3.51	3.11	2.85	2.67	2.29	2.04	1.74
		040	30.6	23.9	22.6	20.7	18.4	16.8	15.8	13.5	12.1	10.3
		050	50.1	41.3	39.1	35.9	31.8	29.1	27.3	23.4	20.9	17.8
		063	85.1	69.7	66.0	60.5	53.6	49.2	46.0	39.4	35.2	30.0
		080	262	253	250	230	203	187	174	150	134	114
		110	738	551	522	479	424	389	363	311	278	236
		140	1640	1120	1060	970	860	790	740	630	560	480
		180	2860	1770	1680	1540	1360	1250	1170	1000	890	750
		250	5840	4110	3890	3570	3160	2890	2700	2300	2040	1690
36	150	032	2.70	2.10	1.99	1.82	1.59	1.42	1.30	1.11	0.99	0.83
		040	10.9	9.65	9.65	9.65	9.50	9.26	9.06	7.75	6.89	5.78
		050	37.9	27.3	25.8	23.7	20.7	18.5	16.9	14.4	12.8	10.8
		063	63.6	48.2	45.6	41.8	36.5	32.6	29.8	25.4	22.6	18.9
		080	152	92.9	88.0	80.7	70.4	62.8	57.5	48.9	43.4	36.2
		110	359	319	315	289	252	225	206	175	155	129
		140	760	497	471	432	376	335	307	259	227	182
		180	2100	1310	1240	1140	990	880	810	680	590	460
		250	4150	2710	2560	2350	2040	1810	1640	1350	1130	740
	180	025	2.13	1.71	1.62	1.48	1.31	1.17	1.08	0.92	0.82	0.69
		032	4.77	3.83	3.63	3.33	2.94	2.64	2.42	2.06	1.84	1.56
		040	30.6	22.7	21.5	19.7	17.4	15.6	14.3	12.2	10.9	9.2
		050	51.5	39.3	37.2	34.1	30.2	27.1	24.8	21.1	18.9	16.0
		063	85.1	66.2	62.7	57.5	50.9	45.6	41.8	35.6	31.7	26.8
		080	164	151	151	148	131	118	108	92	82	69
		110	591	401	380	348	308	276	253	215	191	160
		140	1160	849	804	737	653	584	534	454	403	335
		180	2860	1680	1590	1460	1290	1150	1050	890	790	640
		250	5840	3910	3700	3390	2990	2670	2440	2040	1770	1350
	210	025	2.13	1.75	1.65	1.52	1.34	1.22	1.12	0.95	0.85	0.72
		032	4.77	3.92	3.71	3.40	3.01	2.73	2.50	2.14	1.91	1.62
		040	30.6	23.2	21.9	20.1	17.8	16.2	14.8	12.6	11.3	9.6
		050	51.5	40.1	38.0	34.9	30.9	28.0	25.7	21.9	19.5	16.6
		063	85.1	67.6	64.0	58.7	52.0	47.2	43.3	36.9	32.9	27.9
		080	164	154	154	152	134	122	112	95	85	72
		110	591	410	388	356	315	286	262	223	199	168
		140	1160	868	822	754	667	605	554	472	419	351
		180	2860	1720	1620	1490	1320	1200	1090	930	820	680
		250	5840	3990	3780	3460	3060	2770	2530	2130	1860	1470
	240	025	2.13	1.77	1.68	1.54	1.36	1.25	1.15	0.98	0.87	0.74
		032	4.77	3.97	3.76	3.45	3.06	2.80	2.57	2.20	1.96	1.67
		040	30.6	23.5	22.3	20.4	18.1	16.6	15.2	13.0	11.6	9.9
		050	51.5	40.7	38.5	35.3	31.3	28.7	26.3	22.5	20.1	17.1
		063	85.1	68.6	65.0	59.6	52.8	48.4	44.4	37.9	33.8	28.7
		080	164	156	156	154	136	125	115	98	87	74
		110	591	416	394	361	320	293	269	229	204	173
		140	1160	881	834	765	677	621	570	485	432	364
		180	2860	1740	1650	1510	1340	1230	1120	960	850	700
		250	5840	4040	3830	3510	3100	2840	2600	2200	1930	1560

Roller gear cam drive (standard housing)

Output torque table

● RGIS flange shaft (4 dwell)

Cam curve/MS

Index number	Total index angle (deg)	Size	Static rated output torque (N·m)	Rated dynamic output torque (N·m)								
				Input shaft rotational speed (rpm)								
				10	15	20	30	40	50	75	100	150
36	270	025	2.13	1.79	1.70	1.56	1.38	1.26	1.17	1.00	0.89	0.76
		032	4.77	4.02	3.80	3.49	3.09	2.83	2.63	2.24	2.00	1.71
		040	30.6	23.7	22.5	20.6	18.3	16.7	15.5	13.3	11.8	10.1
		050	51.5	41.1	38.9	35.7	31.6	29.0	26.9	22.9	20.5	17.4
		063	85.1	69.3	65.6	60.2	53.3	48.9	45.3	38.7	34.5	29.4
		080	164	158	158	155	137	126	117	100	89	76
		110	591	420	397	365	323	296	275	234	209	177
		140	1160	890	843	773	684	627	582	496	442	373
		180	2860	1760	1670	1530	1350	1240	1150	980	870	730
		250	5840	4080	3870	3550	3140	2870	2660	2250	1990	1630
	300	025	2.13	1.81	1.71	1.57	1.39	1.27	1.19	1.02	0.91	0.77
		032	4.77	4.05	3.83	3.52	3.11	2.86	2.67	2.28	2.04	1.74
		040	30.6	23.9	22.7	20.8	18.4	16.9	15.8	13.5	12.0	10.3
		050	51.5	41.4	39.2	35.9	31.8	29.2	27.3	23.3	20.8	17.8
		063	85.1	69.8	66.1	60.6	53.7	49.2	46.0	39.3	35.1	29.9
		080	164	159	159	156	139	127	119	102	91	77
		110	591	423	400	367	325	298	279	238	213	180
		140	1160	897	849	779	689	632	591	505	450	381
		180	2860	1770	1680	1540	1360	1250	1170	1000	890	740
		250	5840	4110	3890	3570	3160	2900	2700	2300	2030	1680
	330	025	2.13	1.82	1.72	1.58	1.40	1.28	1.20	1.03	0.92	0.79
		032	4.77	4.07	3.85	3.54	3.13	2.87	2.69	2.32	2.07	1.76
		040	30.6	24.1	22.8	20.9	18.5	17.0	15.9	13.7	12.2	10.4
		050	51.5	41.6	39.4	36.1	32.0	29.3	27.4	23.7	21.1	18.0
		063	85.1	70.2	66.5	61.0	54.0	49.5	46.3	39.9	35.6	30.4
		080	164	160	160	157	139	128	119	103	92	78
		110	591	425	402	369	327	300	280	242	216	183
		140	1160	902	854	783	693	636	595	512	457	387
		180	2860	1780	1690	1550	1370	1260	1170	1010	900	760
		250	5840	4130	3910	3590	3180	2910	2720	2330	2070	1720
40	150	025	1.49	1.18	1.11	1.02	0.89	0.80	0.73	0.62	0.55	0.47
		032	2.70	2.14	2.03	1.86	1.63	1.46	1.33	1.14	1.01	0.85
		040	10.9	9.85	9.85	9.85	9.75	9.49	9.30	7.95	7.07	5.94
		050	37.9	27.8	26.3	24.2	21.2	18.9	17.3	14.8	13.1	11.1
		063	63.6	49.2	46.5	42.7	37.4	33.4	30.6	26.0	23.2	19.4
		080	152	94.8	89.8	82.4	72.2	64.5	59.0	50.2	44.6	37.3
		110	359	326	322	295	259	231	211	180	159	133
		140	950	663	627	575	504	450	411	348	307	251
		180	2100	1340	1270	1160	1020	910	830	700	610	480
		250	4150	2760	2610	2390	2090	1860	1690	1390	1170	800
	180	025	2.13	1.73	1.64	1.51	1.33	1.20	1.10	0.94	0.84	0.71
		032	3.66	2.99	2.83	2.60	2.30	2.07	1.89	1.62	1.44	1.22
		040	10.9	10.1	10.1	10.1	10.1	9.9	9.7	8.3	7.4	6.3
		050	37.9	28.6	27.1	24.8	22.0	19.8	18.1	15.4	13.8	11.7
		063	85.1	67.2	63.6	58.4	51.7	46.5	42.6	36.3	32.4	27.4
		080	164	153	153	151	133	120	110	94	84	71
		110	359	335	331	304	269	242	221	188	167	141
		140	950	682	646	592	524	471	431	366	324	269
		180	2100	1380	1310	1200	1060	950	870	740	650	520
		250	4150	2840	2680	2460	2170	1950	1770	1480	1270	950

RGIS flange shaft (4 dwell)

Cam curve/MS

Index number	Total index angle (deg)	Size	Static rated output torque (N·m)	Rated dynamic output torque (N·m)								
				Input shaft rotational speed (rpm)								
				10	15	20	30	40	50	75	100	150
40	210	025	2.13	1.77	1.67	1.54	1.36	1.24	1.14	0.97	0.86	0.73
		032	3.66	3.05	2.88	2.64	2.34	2.14	1.96	1.67	1.49	1.27
		040	10.9	10.3	10.3	10.3	10.3	10.3	10.0	8.6	7.7	6.5
		050	37.9	29.1	27.5	25.3	22.4	20.4	18.7	15.9	14.2	12.1
		063	85.1	68.4	64.8	59.4	52.6	48.0	44.0	37.5	33.5	28.4
		080	164	156	156	153	136	124	113	97	86	73
		110	359	341	337	309	273	249	228	195	173	146
		140	950	694	657	603	534	487	446	379	337	282
		180	2100	1410	1330	1220	1080	980	900	760	670	550
		250	5840	4030	3820	3500	3100	2820	2570	2170	1900	1510
	240	025	2.13	1.79	1.70	1.56	1.38	1.26	1.16	0.99	0.89	0.75
		032	3.66	3.08	2.92	2.68	2.37	2.17	2.01	1.71	1.53	1.30
		040	10.9	10.4	10.4	10.4	10.4	10.4	10.3	8.8	7.9	6.7
		050	37.9	29.4	27.9	25.6	22.6	20.7	19.1	16.3	14.6	12.4
		063	85.1	69.2	65.5	60.1	53.2	48.8	45.0	38.4	34.3	29.1
		080	164	158	158	155	137	126	116	99	88	75
		110	359	345	341	313	277	254	234	199	178	150
		140	950	703	666	610	540	495	457	389	346	291
		180	2100	1420	1350	1240	1090	1000	920	780	690	580
		250	5840	4080	3860	3540	3130	2870	2640	2230	1970	1600
	270	025	2.13	1.81	1.71	1.57	1.39	1.27	1.19	1.01	0.91	0.77
		032	4.77	4.05	3.83	3.52	3.11	2.86	2.66	2.27	2.03	1.70
		040	10.9	10.5	10.5	10.5	10.5	10.5	10.5	9.0	8.0	6.8
		050	37.9	29.7	28.1	25.8	22.8	20.9	19.5	16.6	14.9	12.6
		063	85.1	69.8	66.1	60.6	53.7	49.2	45.9	39.2	35.0	29.7
		080	164	159	159	156	139	127	118	101	90	77
		110	359	347	344	315	279	256	238	203	181	154
		140	950	709	671	616	545	500	466	397	353	298
		180	2100	1430	1360	1250	1100	1010	940	800	710	590
		250	5840	4110	3890	3570	3160	2890	2690	2280	2020	1660
	300	025	2.13	1.82	1.72	1.58	1.40	1.28	1.20	1.03	0.92	0.78
		032	4.77	4.07	3.86	3.54	3.13	2.87	2.69	2.31	2.06	1.80
		040	10.9	10.6	10.6	10.6	10.6	10.6	10.6	9.1	8.2	6.9
		050	37.9	29.8	28.2	25.9	22.9	21.0	19.7	16.9	15.1	12.8
		063	85.1	70.2	66.5	61.0	54.0	49.5	46.3	39.8	35.5	30.2
		080	164	160	160	157	139	128	120	103	92	78
		110	359	349	346	317	281	257	241	207	184	156
		140	950	713	675	620	548	503	470	403	359	304
		180	2100	1440	1370	1250	1110	1020	950	810	720	610
		250	5840	4140	3920	3590	3180	2910	2720	2320	2060	1700
	330	025	2.13	1.83	1.73	1.59	1.41	1.29	1.21	1.04	0.93	0.80
		032	4.77	4.09	3.88	3.55	3.15	2.89	2.70	2.34	2.09	1.80
		040	10.9	10.6	10.6	10.6	10.6	10.6	10.6	9.3	8.3	7.0
		050	37.9	30.0	28.4	26.0	23.0	21.1	19.8	17.1	15.3	13.0
		063	85.1	70.5	66.8	61.3	54.2	49.8	46.5	40.3	36.0	30.7
		080	164	161	161	158	140	128	120	104	93	79
		110	359	351	347	318	282	259	242	209	187	159
		140	950	717	679	622	551	505	472	409	365	309
		180	2100	1450	1370	1260	1110	1020	960	830	740	620
		250	5840	4150	3930	3610	3190	2930	2730	2360	2090	1740

Roller gear cam drive (standard housing)

Output torque table

Index series

● RGIS flange shaft (4 dwell)

Cam curve/MS

Index number	Total index angle (deg)	Size	Static rated output torque (N·m)	Rated dynamic output torque (N·m)								
				Input shaft rotational speed (rpm)								
				10	15	20	30	40	50	75	100	150
48	120	032	1.89	1.49	1.41	1.29	1.12	1.00	0.91	0.78	0.69	0.58
		040	10.2	8.87	8.40	7.70	6.67	5.95	5.45	4.62	4.09	3.37
		050	12.8	11.7	11.7	11.7	11.5	11.2	10.9	9.3	8.3	6.9
		063	25.3	22.8	22.8	22.8	22.2	21.7	21.2	20.3	18.9	15.7
		080	80.0	61.6	58.3	53.5	46.3	41.3	37.8	32.0	28.3	23.1
		110	225	203	203	199	172	154	141	119	105	85
		140	462	414	409	375	324	289	264	222	194	152
		180	1220	844	799	732	632	562	511	423	360	255
		250	3910	2260	2140	1960	1690	1490	1350	1090	880	490
	150	032	2.70	2.21	2.09	1.92	1.69	1.51	1.39	1.18	1.05	0.89
		040	10.2	9.14	8.65	7.94	7.01	6.26	5.74	4.88	4.33	3.62
		050	12.8	12.1	12.1	12.1	12.1	11.8	11.5	9.8	8.8	7.4
		063	63.6	50.5	47.8	43.9	38.8	34.6	31.7	27.0	24.1	20.3
		080	108	85.5	81.0	74.2	65.6	58.6	53.7	45.7	40.6	34.0
		110	225	210	210	206	182	163	149	127	112	93
		140	462	429	424	389	344	307	281	237	209	170
		180	1220	876	829	760	670	597	545	457	396	305
		250	3910	2340	2220	2030	1790	1590	1440	1190	1010	690
	180	032	2.70	2.25	2.13	1.96	1.73	1.57	1.44	1.23	1.10	0.93
		040	10.2	9.30	8.80	8.08	7.15	6.48	5.94	5.05	4.50	3.79
		050	12.8	12.3	12.3	12.3	12.3	12.1	11.9	10.2	9.1	7.7
		063	63.6	51.6	48.8	44.8	39.7	36.0	32.9	28.1	25.0	21.2
		080	108	87.3	82.6	75.8	67.1	60.8	55.7	47.5	42.3	35.6
		110	331	280	266	244	216	195	179	152	135	114
		140	760	534	505	463	410	372	340	289	256	212
		180	1490	1130	1070	980	870	790	720	610	530	430
		250	3910	2390	2260	2070	1830	1650	1510	1260	1080	810
	210	032	2.70	2.28	2.16	1.98	1.76	1.61	1.48	1.26	1.13	0.96
		040	10.2	9.40	8.90	8.16	7.23	6.63	6.09	5.19	4.62	3.91
		050	12.8	12.4	12.4	12.4	12.4	12.4	12.2	10.4	9.3	7.9
		063	63.6	52.2	49.5	45.4	40.2	36.8	33.8	28.9	25.7	21.8
		080	152	101	95	88	78	71	65	56	50	42
		110	331	284	269	247	218	200	184	157	139	118
		140	760	541	512	470	416	381	350	297	264	221
		180	1490	1150	1080	990	880	810	740	630	550	460
		250	4150	2930	2770	2540	2250	2060	1880	1590	1390	1100
	240	032	2.70	2.30	2.18	2.00	1.77	1.63	1.51	1.29	1.15	0.98
		040	10.2	9.47	8.96	8.22	7.28	6.67	6.21	5.29	4.72	4.00
		050	12.8	12.5	12.5	12.5	12.5	12.5	12.4	10.6	9.5	8.1
		063	63.6	52.7	49.9	45.7	40.5	37.1	34.5	29.5	26.3	22.3
		080	152	102	96	88	78	72	67	57	51	43
		110	331	286	271	249	220	202	188	160	143	121
		140	760	545	516	474	419	384	357	304	271	227
		180	1490	1160	1090	1000	890	810	760	640	570	470
		250	4150	2950	2800	2560	2270	2080	1930	1630	1430	1160

● RGIS flange shaft (4 dwell)

Cam curve/MS

Index number	Total index angle (deg)	Size	Static rated output torque (N·m)	Rated dynamic output torque (N·m)								
				Input shaft rotational speed (rpm)								
				10	15	20	30	40	50	75	100	150
48	270	032	2.70	2.32	2.20	2.01	1.78	1.64	1.53	1.31	1.17	1.00
		040	10.2	9.51	9.01	8.26	7.31	6.71	6.27	5.38	4.80	4.07
		050	12.8	12.6	12.6	12.6	12.6	12.6	12.6	10.8	9.7	8.2
		063	63.6	53.0	50.2	46.0	40.7	37.4	34.9	30.0	26.8	22.8
		080	152	102	97	89	79	72	67	58	52	44
		110	331	288	273	250	221	203	190	163	145	123
		140	760	549	520	477	422	387	362	310	276	233
		180	1490	1160	1100	1010	890	820	770	650	580	490
		250	4150	2970	2810	2580	2280	2090	1950	1660	1470	1200
	300	032	2.70	2.33	2.21	2.02	1.79	1.64	1.54	1.33	1.19	1.01
		040	10.2	9.55	9.04	8.29	7.34	6.73	6.29	5.45	4.86	4.13
		050	12.8	12.6	12.6	12.6	12.6	12.6	12.6	11.0	9.8	8.3
		063	63.6	53.2	50.4	46.2	40.9	37.5	35.1	30.4	27.1	23.1
		080	152	103	97	89	79	72	68	59	52	45
		110	331	289	274	251	222	204	191	165	147	125
		140	760	551	522	479	424	389	363	314	280	237
		180	1490	1170	1110	1010	900	820	770	660	590	500
		250	4150	2980	2820	2590	2290	2100	1960	1690	1490	1230
	330	032	2.70	2.34	2.21	2.03	1.80	1.65	1.54	1.35	1.20	1.03
		040	10.2	9.57	9.06	8.31	7.36	6.75	6.31	5.51	4.92	4.18
		050	12.8	12.6	12.6	12.6	12.6	12.6	12.6	11.1	9.9	8.4
		063	63.6	53.4	50.5	46.4	41.0	37.6	35.2	30.7	27.5	23.4
		080	152	103	98	90	79	73	68	59	53	45
		110	331	290	275	252	223	205	191	167	149	127
		140	760	553	524	480	425	390	365	318	284	240
		180	1490	1170	1110	1020	900	830	770	670	600	500
		250	4150	2990	2830	2600	2300	2110	1970	1710	1520	1260

Roller gear cam drive (standard housing)

Output torque table

Oscillating series

● RGOS straight shaft

Cam curve/MS

Oscillating angle (deg)	Total index angle (deg)	Size	Static rated output torque (N·m)	Rated dynamic output torque (N·m) Input shaft rotational speed (rpm)								
				15	30	45	60	75	100	150	200	300
180	300	025	1.09	0.57	0.53	0.45	0.40	0.37	0.33	0.28	0.25	0.20
		032	1.99	1.04	0.96	0.82	0.73	0.67	0.60	0.51	0.45	
	360	025	1.09	0.63	0.60	0.51	0.46	0.42	0.37	0.32	0.28	0.23
		032	2.69	1.57	1.48	1.26	1.13	1.03	0.92	0.79	0.70	0.59
120	240	025	1.09	0.63	0.59	0.50	0.45	0.41	0.37	0.31	0.27	0.23
		032	2.69	1.57	1.45	1.24	1.11	1.02	0.91	0.77	0.68	0.57
	300	025	1.09	0.71	0.67	0.57	0.51	0.47	0.42	0.36	0.32	0.26
		032	2.69	1.76	1.66	1.42	1.27	1.16	1.04	0.88	0.78	0.66
	360	025	1.09	0.76	0.72	0.63	0.56	0.51	0.46	0.39	0.35	0.29
		032	2.69	1.89	1.79	1.55	1.39	1.27	1.13	0.97	0.86	0.73
		040	10.9	6.64	6.64	6.50	6.33	6.20	6.04	5.17	4.61	3.90
		050	19.9	12.3	12.3	12.1	11.7	11.5	11.2	10.8	10.0	8.4
		063	85.1	44.2	41.8	36.2	32.3	29.6	26.5	22.5	19.9	16.6
		080	164	100	100	93	83	76	68	58	51	43
		110	359	220	218	189	168	154	138	116	103	84
		140	950	444	420	363	324	297	264	222	194	152
		180	2860	1110	1050	910	810	740	660	550	470	350
		250	5840	2620	2480	2140	1910	1740	1530	1250	1040	
90	180	032	1.39	0.81	0.74	0.63	0.56	0.52	0.46	0.39	0.34	0.27
	240	025	1.09	0.73	0.68	0.58	0.52	0.48	0.43	0.36	0.32	0.27
		032	1.39	0.93	0.87	0.75	0.67	0.61	0.54	0.46	0.41	0.34
	300	025	1.49	0.83	0.79	0.68	0.61	0.56	0.50	0.42	0.37	0.31
		032	2.70	1.52	1.44	1.24	1.11	1.02	0.91	0.77	0.69	0.57
		040	10.2	6.67	6.31	5.45	4.87	4.46	3.98	3.39	3.02	2.54
		050	12.8	8.90	8.90	8.68	8.45	8.28	8.06	6.88	6.10	5.08
		063	63.6	35.4	33.5	28.9	25.8	23.6	21.1	17.9	15.8	13.0
		080	108	59.7	56.5	48.8	43.6	39.9	35.6	30.1	26.6	21.7
		110	331	193	182	157	140	129	115	97	85	68
		140	760	363	343	296	264	241	214	179	155	117
		180	1490	769	728	627	559	510	451	371	312	211
		250	4150	2000	1890	1620	1440	1310	1150	920	740	
	360	025	1.49	0.92	0.87	0.76	0.68	0.62	0.56	0.48	0.42	0.36
		032	2.70	1.68	1.59	1.40	1.25	1.14	1.02	0.87	0.77	0.65
		040	10.9	7.79	7.79	7.72	7.53	7.38	7.18	6.16	5.49	4.66
		050	19.9	14.4	14.4	14.3	13.9	13.6	13.3	12.8	11.9	10.1
		063	63.6	38.9	36.9	32.3	28.9	26.5	23.6	20.1	17.8	14.9
		080	152	75.0	71.0	62.3	55.7	51.0	45.5	38.7	34.3	28.6
		110	359	258	255	224	200	183	164	139	123	102
		140	950	522	494	433	387	354	316	267	234	189
		180	2100	1060	1000	880	780	720	640	530	460	350
		250	4150	2200	2080	1820	1620	1480	1310	1070	900	590
60	120	025	1.09	0.63	0.57	0.48	0.43	0.40	0.35	0.30	0.26	0.21
		032	2.69	1.57	1.41	1.20	1.07	0.98	0.88	0.74	0.65	0.52
	180	025	1.09	0.76	0.71	0.61	0.54	0.50	0.44	0.38	0.33	0.28
		032	2.69	1.89	1.76	1.50	1.34	1.23	1.10	0.93	0.83	0.69
		040	10.9	6.64	6.53	6.29	6.13	6.01	5.85	5.00	4.44	3.72
		050	37.9	18.9	17.6	15.0	13.4	12.3	11.0	9.3	8.2	6.8
		063	85.1	44.2	41.1	35.1	31.3	28.7	25.6	21.6	19.0	15.4
		080	164	100	99	90	81	74	66	56	49	40
		110	591	268	250	213	190	174	155	130	113	88
		140	950	444	413	352	314	286	253	210	178	124
		180	2860	1110	1030	880	780	710	630	510	420	250
		250	5840	2620	2440	2070	1830	1660	1440	1120	830	

● RGOS straight shaft

Cam curve/MS

Oscillating angle (deg)	Total index angle (deg)	Size	Static rated output torque (N·m)	Rated dynamic output torque (N·m)								
				Input shaft rotational speed (rpm)								
				15	30	45	60	75	100	150	200	300
60	240	025	2.89	1.78	1.68	1.45	1.30	1.19	1.06	0.90	0.81	0.68
		032	7.41	4.61	4.37	3.76	3.36	3.08	2.75	2.35	2.09	1.77
		040	41.6	24.7	23.4	20.2	18.0	16.5	14.8	12.6	11.2	9.5
		050	67.0	41.1	38.9	33.5	30.0	27.5	24.5	20.9	18.6	15.7
		063	119	59.1	55.9	48.2	43.1	39.5	35.2	29.9	26.6	22.2
		080	262	188	186	160	143	131	117	100	89	74
		110	738	410	388	334	299	274	244	207	183	151
		140	1640	823	779	671	599	548	488	412	362	291
		180	4270	2210	2090	1800	1610	1470	1310	1100	950	740
		250	10400	3580	3390	2910	2590	2370	2090	1710	1420	920
	300	025	3.76	2.56	2.43	2.13	1.91	1.75	1.56	1.33	1.19	1.01
		032	7.41	5.09	4.82	4.24	3.79	3.47	3.10	2.65	2.36	2.00
		040	41.6	27.2	25.8	22.7	20.3	18.6	16.6	14.2	12.6	10.8
		050	67.0	45.2	42.8	37.6	33.6	30.8	27.5	23.5	20.9	17.8
		063	129	102	102	96	86	79	70	60	54	45
		080	262	207	204	180	161	147	132	112	100	84
		110	738	451	427	375	335	307	274	233	207	174
		140	1640	907	859	755	674	618	551	468	414	342
		180	4270	2440	2310	2030	1810	1660	1480	1250	1100	890
		250	10400	3930	3720	3270	2920	2670	2370	1970	1700	1260
	360	025	3.76	2.73	2.59	2.29	2.07	1.89	1.69	1.44	1.29	1.10
		032	7.41	5.42	5.14	4.55	4.10	3.76	3.36	2.87	2.56	2.18
		040	41.6	28.9	27.4	24.3	21.9	20.1	17.9	15.3	13.7	11.6
		050	67.0	47.9	45.4	40.2	36.3	33.2	29.7	25.3	22.6	19.2
		063	129	109	109	103	93	85	76	65	58	49
		080	431	268	253	224	202	185	166	141	126	107
		110	903	606	574	508	458	420	375	320	285	240
		140	2230	1190	1130	1000	900	830	740	630	560	470
		180	4270	2590	2460	2170	1960	1790	1600	1360	1200	990
		250	10400	4180	3950	3500	3150	2880	2570	2160	1880	1480
45	90	032	1.39	0.81	0.72	0.61	0.55	0.50	0.44	0.37	0.31	0.23
	120	032	1.39	0.93	0.85	0.72	0.65	0.59	0.53	0.44	0.39	0.31
	180	025	2.13	1.31	1.24	1.06	0.94	0.87	0.77	0.66	0.58	0.49
		032	4.77	2.97	2.80	2.39	2.13	1.96	1.75	1.48	1.32	1.10
		040	10.9	7.79	7.77	7.49	7.29	7.15	6.96	5.95	5.30	4.47
		050	50.1	30.9	29.2	24.9	22.2	20.4	18.2	15.5	13.7	11.5
		063	85.1	51.8	48.9	41.7	37.2	34.1	30.4	25.8	22.8	18.8
		080	164	118	117	107	96	88	78	67	59	49
		110	359	258	254	217	194	177	158	133	117	94
		140	950	522	492	420	374	342	304	254	219	165
		180	2100	1060	1000	850	760	690	610	500	420	280
		250	4150	2200	2070	1760	1560	1420	1230	970	740	
	240	025	2.13	1.49	1.41	1.23	1.10	1.01	0.90	0.77	0.68	0.58
		032	4.77	3.35	3.18	2.77	2.48	2.27	2.03	1.73	1.54	1.30
		040	30.6	20.0	18.9	16.5	14.7	13.5	12.1	10.3	9.2	7.8
		050	50.1	34.7	32.9	28.7	25.7	23.5	21.0	17.9	16.0	13.5
		063	85.1	58.3	55.2	48.2	43.1	39.5	35.2	30.0	26.7	22.4
		080	242	174	165	144	128	118	105	89	80	67
		110	591	354	335	292	261	239	213	181	161	133
		140	1160	745	706	616	550	503	449	380	335	272
		180	2100	1190	1130	990	880	800	710	600	520	400
		250	4150	2470	2340	2030	1810	1650	1460	1200	1000	660

Roller gear cam drive (standard housing)

Output torque table

Oscillating series

● RGOS straight shaft

Cam curve/MS

Oscillating angle (deg)	Total index angle (deg)	Size	Static rated output torque (N·m)	Rated dynamic output torque (N·m)								
				Input shaft rotational speed (rpm)								
				15	30	45	60	75	100	150	200	300
45	300	025	2.13	1.60	1.51	1.34	1.20	1.10	0.99	0.84	0.75	0.64
		032	4.77	3.59	3.40	3.01	2.71	2.48	2.22	1.89	1.69	1.43
		040	30.6	21.3	20.2	17.9	16.1	14.7	13.2	11.2	10.0	8.6
		050	50.1	37.1	35.1	31.1	27.9	25.6	22.9	19.5	17.4	14.8
		063	85.1	62.3	59.0	52.3	47.0	43.0	38.5	32.8	29.2	24.7
		080	242	186	176	156	140	128	115	98	87	74
		110	591	378	358	317	285	261	233	198	176	148
		140	1160	798	755	669	601	550	491	417	370	307
		180	2860	1580	1490	1320	1190	1090	970	820	720	580
		250	5840	3680	3490	3080	2770	2530	2250	1890	1640	1260
	360	025	2.13	1.67	1.58	1.40	1.28	1.17	1.05	0.89	0.80	0.68
		032	4.77	3.75	3.55	3.14	2.87	2.63	2.35	2.01	1.79	1.52
		040	30.6	22.2	21.0	18.6	17.0	15.6	14.0	11.9	10.6	9.1
		050	50.1	38.5	36.5	32.3	29.5	27.1	24.2	20.6	18.4	15.7
		063	85.1	64.9	61.4	54.4	49.7	45.6	40.7	34.7	31.0	26.3
		080	242	194	183	162	148	136	121	104	92	78
		110	738	513	486	430	393	360	322	274	244	207
		140	1640	1040	980	870	790	730	650	550	490	410
		180	2860	1650	1560	1380	1260	1150	1030	870	770	640
		250	5840	3830	3630	3210	2930	2680	2390	2020	1770	1410
30	180	032	1.89	1.38	1.31	1.13	1.01	0.93	0.83	0.70	0.62	0.52
		040	7.19	6.13	5.81	5.03	4.49	4.12	3.68	3.13	2.79	2.35
		050	12.8	11.1	11.1	10.9	10.6	10.4	10.1	8.6	7.7	6.4
		063	25.3	21.3	21.2	20.8	20.2	19.8	19.3	18.5	17.1	14.2
		080	108	77.0	72.9	63.1	56.4	51.6	46.1	39.1	34.6	28.5
		110	225	189	189	176	157	144	128	108	95	77
		140	462	386	381	330	294	269	239	201	175	135
		180	976	603	570	493	439	400	353	288	239	153
		250	2870	1710	1620	1400	1240	1130	990	790	620	300
	240	032	1.89	1.49	1.41	1.25	1.12	1.02	0.91	0.78	0.69	0.58
		040	10.2	8.87	8.40	7.44	6.67	6.12	5.47	4.66	4.16	3.53
		050	12.8	11.8	11.7	11.7	11.5	11.3	11.0	9.4	8.4	7.1
		063	25.3	22.8	22.8	22.8	22.3	21.8	21.2	20.4	19.0	16.0
		080	108	82.5	78.1	69.2	62.0	56.9	50.8	43.2	38.4	32.2
		110	225	203	203	192	173	158	141	120	106	88
		140	462	414	409	362	325	297	265	224	198	161
		180	976	647	612	542	485	443	394	329	284	213
		250	2870	1830	1730	1530	1370	1250	1110	910	770	530
	300	032	1.89	1.54	1.46	1.29	1.18	1.08	0.97	0.83	0.74	0.62
		040	10.2	9.14	8.66	7.66	7.02	6.43	5.75	4.90	4.38	3.73
		050	12.8	12.1	12.1	12.1	12.1	11.8	11.5	9.9	8.8	7.5
		063	25.3	23.6	23.6	23.6	23.5	23.1	22.5	21.6	20.2	17.1
		080	108	85.5	81.0	71.7	65.6	60.1	53.7	45.8	40.8	34.5
		110	225	210	210	199	182	167	149	127	113	95
		140	462	429	425	376	344	315	281	239	212	176
		180	1220	876	829	734	671	614	547	463	407	328
		250	3910	2340	2220	1960	1790	1640	1460	1220	1060	820

● RGOS straight shaft

Cam curve/MS

Oscillating angle (deg)	Total index angle (deg)	Size	Static rated output torque (N·m)	Rated dynamic output torque (N·m) Input shaft rotational speed (rpm)								
				15	30	45	60	75	100	150	200	300
30	360	032	1.89	1.58	1.49	1.32	1.21	1.13	1.01	0.86	0.77	0.65
		040	10.2	9.30	8.81	7.80	7.15	6.65	5.94	5.07	4.53	3.86
		050	12.8	12.3	12.3	12.3	12.3	12.2	11.9	10.2	9.1	7.7
		063	25.3	24.1	24.1	24.1	24.1	23.9	23.3	22.4	21.0	17.8
		080	108	87.3	82.6	73.2	67.1	62.4	55.8	47.5	42.4	36.0
		110	331	280	266	235	216	200	179	153	136	115
		140	760	534	505	447	410	381	341	290	258	216
		180	1220	894	847	749	687	638	569	483	427	351
		250	3910	2390	2260	2000	1830	1700	1520	1280	1120	900

Roller gear cam drive (standard housing)

Output torque table

Oscillating series

● RGOS flange shaft

Cam curve/MS

Oscillating angle (deg)	Total index angle (deg)	Size	Static rated output torque (N·m)	Rated dynamic output torque (N·m)								
				Input shaft rotational speed (rpm)								
				15	30	45	60	75	100	150	200	300
180	300	025	1.09	0.57	0.53	0.45	0.40	0.37	0.33	0.28	0.25	0.20
		032	1.99	1.04	0.96	0.82	0.73	0.67	0.60	0.51	0.45	
	360	025	1.09	0.63	0.60	0.51	0.46	0.42	0.37	0.32	0.28	0.23
		032	2.69	1.57	1.48	1.26	1.13	1.03	0.92	0.79	0.70	0.59
120	240	025	1.09	0.63	0.59	0.50	0.45	0.41	0.37	0.31	0.27	0.23
		032	2.69	1.57	1.45	1.24	1.11	1.02	0.91	0.77	0.68	0.57
	300	025	1.09	0.71	0.67	0.57	0.51	0.47	0.42	0.36	0.32	0.26
		032	2.69	1.76	1.66	1.42	1.27	1.16	1.04	0.88	0.78	0.66
	360	025	1.09	0.76	0.72	0.63	0.56	0.51	0.46	0.39	0.35	0.29
		032	2.69	1.89	1.79	1.55	1.39	1.27	1.13	0.97	0.86	0.73
		040	10.9	6.64	6.64	6.49	6.32	6.18	6.01	5.10	4.48	3.61
		050	19.9	12.3	12.3	12.0	11.7	11.5	11.2	10.7	9.9	8.1
		063	85.1	44.2	41.8	36.2	32.3	29.6	26.4	22.4	19.7	16.1
		080	164	100	100	93	83	76	68	58	51	42
		110	359	220	218	188	168	154	137	115	100	78
		140	950	444	420	363	324	296	262	218	186	135
		180	2860	1110	1050	910	810	740	650	530	440	290
		250	5840	2620	2480	2140	1890	1720	1500	1160	880	
90	180	032	1.39	0.81	0.74	0.63	0.56	0.52	0.46	0.39	0.34	0.27
	240	025	1.09	0.73	0.68	0.58	0.52	0.48	0.43	0.36	0.32	0.27
		032	1.39	0.93	0.87	0.75	0.67	0.61	0.54	0.46	0.41	0.34
	300	025	1.49	0.83	0.79	0.68	0.61	0.55	0.49	0.42	0.37	0.30
		032	2.70	1.52	1.44	1.24	1.11	1.02	0.91	0.77	0.68	0.55
		040	10.2	6.66	6.31	5.44	4.85	4.44	3.95	3.31	2.88	2.23
		050	12.8	8.90	8.90	8.67	8.44	8.26	8.02	6.80	5.96	4.77
		063	63.6	35.4	33.5	28.9	25.8	23.6	21.0	17.8	15.6	12.5
		080	108	59.7	56.5	48.7	43.5	39.8	35.4	29.8	25.9	20.3
		110	331	193	182	157	140	128	114	95	82	62
		140	760	362	343	295	263	240	212	175	147	100
		180	1490	769	727	625	556	506	443	354	281	142
		250	4150	2000	1880	1620	1430	1290	1110	830	570	
	360	025	1.49	0.92	0.87	0.76	0.68	0.62	0.56	0.47	0.42	0.34
		032	2.70	1.68	1.59	1.40	1.25	1.14	1.02	0.87	0.77	0.64
		040	10.9	7.79	7.79	7.72	7.52	7.36	7.16	6.10	5.40	4.44
		050	19.9	14.4	14.4	14.3	13.9	13.6	13.3	12.7	11.8	9.9
		063	63.6	38.9	36.9	32.3	28.9	26.5	23.6	20.0	17.7	14.5
		080	152	75.0	71.0	62.3	55.6	51.0	45.4	38.4	33.9	27.6
		110	359	258	255	224	200	183	163	138	121	98
		140	950	522	494	433	386	353	314	264	229	177
		180	2100	1060	1000	880	780	710	630	520	440	310
		250	4150	2200	2080	1810	1610	1460	1280	1010	780	330
60	120	025	1.09	0.63	0.57	0.48	0.43	0.40	0.35	0.30	0.26	0.21
		032	2.69	1.57	1.41	1.20	1.07	0.98	0.88	0.74	0.65	0.52
	180	025	1.09	0.76	0.71	0.61	0.54	0.50	0.44	0.38	0.33	0.28
		032	2.69	1.89	1.76	1.50	1.34	1.23	1.10	0.93	0.83	0.69
		040	10.9	6.64	6.52	6.28	6.11	5.97	5.78	4.85	4.18	3.14
		050	37.9	18.9	17.6	15.0	13.4	12.3	10.9	9.2	8.0	6.2
		063	85.1	44.2	41.1	35.1	31.3	28.6	25.5	21.4	18.6	14.4
		080	164	100	99	90	81	74	66	55	48	37
		110	591	268	249	213	190	173	153	127	108	77
		140	950	444	412	351	312	284	250	201	163	92
		180	2860	1110	1030	880	780	710	610	480	360	120
		250	5840	2620	2430	2050	1810	1620	1370	940	520	

● RGOS flange shaft

Cam curve/MS

Oscillating angle (deg)	Total index angle (deg)	Size	Static rated output torque (N·m)	Rated dynamic output torque (N·m)								
				Input shaft rotational speed (rpm)								
				15	30	45	60	75	100	150	200	300
60	240	025	2.89	1.78	1.68	1.45	1.30	1.19	1.06	0.90	0.80	0.66
		032	7.41	4.61	4.37	3.76	3.36	3.08	2.75	2.34	2.08	1.75
		040	41.6	24.7	23.4	20.2	18.0	16.5	14.7	12.5	11.1	9.2
		050	67.0	41.1	38.9	33.5	30.0	27.4	24.5	20.8	18.5	15.4
		063	119	59.1	55.9	48.2	43.0	39.4	35.2	29.8	26.3	21.6
		080	262	188	186	160	143	131	117	99	88	73
		110	738	410	388	334	299	273	243	206	180	145
		140	1640	823	778	670	598	547	486	408	354	273
		180	4270	2210	2090	1800	1600	1470	1300	1080	920	660
		250	10400	3580	3380	2900	2580	2340	2040	1610	1250	
	300	025	3.76	2.56	2.43	2.13	1.91	1.75	1.56	1.33	1.18	1.00
		032	7.41	5.09	4.82	4.24	3.79	3.47	3.10	2.64	2.36	1.99
		040	41.6	27.2	25.8	22.7	20.2	18.5	16.6	14.1	12.5	10.5
		050	67.0	45.2	42.8	37.6	33.6	30.8	27.5	23.4	20.8	17.6
		063	129	102	102	96	86	79	70	60	53	45
		080	262	207	204	180	161	147	131	112	99	83
		110	738	451	427	375	335	307	274	232	206	170
		140	1640	907	859	754	674	617	550	465	409	330
		180	4270	2440	2310	2030	1810	1650	1470	1240	1080	840
		250	10400	3930	3720	3260	2910	2650	2340	1910	1580	1010
	360	025	3.76	2.73	2.59	2.29	2.07	1.89	1.69	1.44	1.29	1.09
		032	7.41	5.42	5.14	4.55	4.10	3.76	3.36	2.86	2.56	2.17
		040	41.6	28.9	27.4	24.3	21.9	20.1	17.9	15.3	13.6	11.5
		050	67.0	47.9	45.4	40.2	36.2	33.2	29.7	25.3	22.6	19.1
		063	129	109	109	103	93	85	76	65	58	49
		080	431	268	253	224	202	185	166	141	126	106
		110	903	606	574	508	458	420	375	319	283	238
		140	2230	1190	1130	1000	900	830	740	630	550	460
		180	4270	2590	2450	2170	1960	1790	1600	1350	1190	960
		250	10400	4180	3950	3490	3140	2870	2550	2110	1800	1300
45	90	032	1.39	0.81	0.72	0.61	0.55	0.50	0.44	0.37	0.31	0.23
	120	032	1.39	0.93	0.85	0.72	0.65	0.59	0.53	0.44	0.39	0.31
	180	025	2.13	1.31	1.24	1.06	0.94	0.86	0.77	0.65	0.57	0.47
		032	4.77	2.97	2.80	2.39	2.13	1.95	1.74	1.48	1.31	1.08
		040	10.9	7.79	7.76	7.48	7.28	7.12	6.91	5.85	5.11	4.03
		050	50.1	30.9	29.1	24.9	22.2	20.3	18.1	15.4	13.6	11.1
		063	85.1	51.8	48.8	41.7	37.2	34.1	30.4	25.6	22.5	18.1
		080	164	118	117	107	96	88	78	66	58	47
		110	359	258	254	217	193	177	157	131	113	85
		140	950	522	492	419	373	341	301	248	208	140
		180	2100	1060	1000	850	750	680	600	480	380	180
		250	4150	2200	2060	1750	1540	1380	1180	840	510	
	240	025	2.13	1.49	1.41	1.23	1.10	1.01	0.90	0.76	0.68	0.56
		032	4.77	3.35	3.18	2.77	2.48	2.27	2.03	1.72	1.53	1.29
		040	30.6	20.0	18.9	16.5	14.7	13.5	12.1	10.2	9.1	7.6
		050	50.1	34.7	32.9	28.7	25.6	23.5	21.0	17.8	15.8	13.2
		063	85.1	58.3	55.2	48.2	43.1	39.4	35.2	29.9	26.5	22.0
		080	242	174	165	144	128	118	105	89	79	66
		110	591	354	335	292	261	239	213	180	158	128
		140	1160	745	705	615	549	503	447	376	329	258
		180	2100	1190	1130	980	880	800	710	590	500	340
		250	4150	2470	2330	2030	1800	1630	1430	1120	870	360

Roller gear cam drive (standard housing)

Output torque table

Oscillating series

● RGOS flange shaft

Cam curve/MS

Oscillating angle (deg)	Total index angle (deg)	Size	Static rated output torque (N·m)	Rated dynamic output torque (N·m)								
				Input shaft rotational speed (rpm)								
				15	30	45	60	75	100	150	200	300
45	300	025	2.13	1.60	1.51	1.34	1.20	1.10	0.99	0.84	0.75	0.63
		032	4.77	3.59	3.40	3.01	2.71	2.48	2.22	1.89	1.68	1.42
		040	30.6	21.3	20.2	17.9	16.1	14.7	13.2	11.2	10.0	8.4
		050	50.1	37.1	35.1	31.1	27.9	25.6	22.9	19.5	17.3	14.6
		063	85.1	62.3	59.0	52.3	47.0	43.0	38.4	32.7	29.1	24.4
		080	242	186	176	156	140	128	115	98	87	73
		110	591	378	358	317	285	261	233	197	175	145
		140	1160	798	755	668	601	550	490	415	366	298
		180	2860	1580	1490	1320	1190	1090	970	810	710	550
		250	5840	3680	3480	3080	2760	2520	2230	1840	1550	1070
	360	025	2.13	1.67	1.58	1.40	1.28	1.17	1.05	0.89	0.80	0.67
		032	4.77	3.75	3.55	3.14	2.87	2.63	2.35	2.01	1.79	1.52
		040	30.6	22.2	21.0	18.6	17.0	15.6	13.9	11.9	10.6	9.0
		050	50.1	38.5	36.5	32.3	29.5	27.1	24.2	20.6	18.4	15.6
		063	85.1	64.9	61.4	54.4	49.7	45.5	40.7	34.7	30.9	26.1
		080	242	194	183	162	148	136	121	103	92	78
		110	738	513	486	430	393	360	322	274	243	205
		140	1640	1040	980	870	790	730	650	550	490	410
		180	2860	1650	1560	1380	1260	1150	1030	870	760	610
		250	5840	3830	3620	3210	2920	2670	2370	1980	1710	1280
30	180	032	1.89	1.38	1.31	1.13	1.01	0.93	0.83	0.70	0.62	0.50
		040	7.19	6.13	5.80	5.02	4.48	4.10	3.65	3.06	2.66	2.06
		050	12.8	11.1	11.1	10.8	10.6	10.3	10.0	8.5	7.5	6.1
		063	25.3	21.3	21.2	20.8	20.2	19.8	19.2	18.4	16.9	13.7
		080	108	77.0	72.9	63.1	56.3	51.6	45.9	38.8	34.0	27.2
		110	225	189	189	176	157	143	127	107	93	72
		140	462	386	381	330	294	268	238	197	167	119
		180	976	603	570	491	436	396	346	273	211	
		250	2870	1710	1620	1390	1230	1110	950	700	470	
	240	032	1.89	1.49	1.41	1.25	1.12	1.02	0.91	0.78	0.69	0.58
		040	10.2	8.87	8.40	7.43	6.67	6.11	5.45	4.62	4.09	3.37
		050	12.8	11.8	11.7	11.7	11.5	11.3	10.9	9.3	8.3	6.9
		063	25.3	22.8	22.8	22.8	22.2	21.8	21.2	20.3	18.9	15.7
		080	108	82.5	78.1	69.1	62.0	56.8	50.7	43.0	38.1	31.5
		110	225	203	203	192	172	158	141	119	105	85
		140	462	414	409	362	324	297	264	222	194	152
		180	976	647	612	541	484	441	390	320	268	177
		250	2870	1830	1730	1530	1360	1240	1080	860	680	330
	300	032	1.89	1.54	1.46	1.29	1.18	1.08	0.97	0.82	0.73	0.62
		040	10.2	9.14	8.65	7.66	7.01	6.43	5.74	4.88	4.33	3.62
		050	12.8	12.1	12.1	12.1	12.1	11.8	11.5	9.8	8.8	7.4
		063	25.3	23.6	23.6	23.6	23.5	23.1	22.4	21.6	20.1	16.9
		080	108	85.5	81.0	71.7	65.6	60.1	53.7	45.7	40.6	34.0
		110	225	210	210	199	182	167	149	127	112	93
		140	462	429	424	376	344	315	281	237	209	170
		180	1220	876	829	733	670	613	545	457	396	305
		250	3910	2340	2220	1960	1790	1630	1440	1190	1010	690

● RGOS flange shaft

Cam curve/MS

Oscillating angle (deg)	Total index angle (deg)	Size	Static rated output torque (N·m)	Rated dynamic output torque (N·m) Input shaft rotational speed (rpm) 15	30	45	60	75	100	150	200	300
30	360	032	1.89	1.58	1.49	1.32	1.21	1.13	1.01	0.86	0.76	0.65
		040	10.2	9.30	8.80	7.80	7.15	6.65	5.94	5.05	4.50	3.79
		050	12.8	12.3	12.3	12.3	12.3	12.2	11.9	10.2	9.1	7.7
		063	25.3	24.1	24.1	24.1	24.1	23.9	23.3	22.4	20.9	17.7
		080	108	87.3	82.6	73.2	67.1	62.4	55.7	47.5	42.3	35.6
		110	331	280	266	235	216	200	179	152	135	114
		140	760	534	505	447	410	381	340	289	256	212
		180	1220	894	846	749	686	637	568	479	420	335
		250	3910	2390	2260	2000	1830	1700	1510	1260	1080	810

Roller gear cam drive (standard housing)

Output torque table

Reducer series

● RGCS straight shaft

Cam curve/CV

Reduction ratio	Total index angle (deg)	Size	Static rated output torque (N·m)	Rated dynamic output torque (N·m)								
				Input shaft rotational speed (rpm)								
				30	60	90	120	150	200	300	400	600
3	360	040	41.6	32.4	30.6	27.1	24.9	23.3	21.4	18.9	17.3	15.4
		050	50.1	40.2	38.0	33.7	30.9	28.9	26.5	23.5	21.5	19.1
		063	129	121	121	115	106	99	91	80	74	65
		080	262	246	243	215	197	185	169	150	138	122
		110	738	535	507	449	412	385	353	313	287	254
		140	1640	1080	1020	910	830	780	710	630	580	510
		180	3030	2080	1970	1740	1600	1500	1370	1220	1110	990
		250	10400	4650	4410	3900	3580	3350	3070	2720	2490	2210
4	360	040	30.6	23.8	22.6	20.0	18.3	17.1	15.7	13.9	12.8	11.3
		050	50.1	41.2	39.0	34.6	31.7	29.6	27.2	24.1	22.1	19.6
		063	85.1	69.5	65.8	58.3	53.5	50.0	45.9	40.6	37.3	33.0
		080	164	158	158	150	138	129	118	105	96	85
		110	591	421	399	353	324	303	278	246	226	200
		140	1160	893	845	749	687	642	589	522	478	424
		180	2860	1770	1670	1480	1360	1270	1160	1030	950	840
		250	5840	4100	3880	3430	3150	2950	2700	2390	2200	1940
5	360	040	10.9	10.6	10.6	10.6	10.6	10.6	10.6	9.4	8.7	7.7
		050	37.9	29.9	28.3	25.1	23.0	21.5	19.7	17.5	16.0	14.2
		063	63.6	52.9	50.1	44.4	40.7	38.1	34.9	30.9	28.4	25.1
		080	152	102	97	86	79	74	67	60	55	49
		110	359	350	346	307	281	263	241	214	196	174
		140	760	548	519	460	422	394	362	320	294	260
		180	1490	1160	1100	970	890	840	770	680	620	550
		250	4150	2970	2810	2490	2280	2130	1960	1730	1590	1410
6	360	040	41.6	33.9	32.1	28.4	26.1	24.4	22.4	19.8	18.2	16.1
		050	67.0	55.9	52.9	46.9	43.0	40.2	36.9	32.7	30.0	26.5
		063	129	127	127	121	111	103	95	84	77	68
		080	431	314	297	263	241	226	207	183	168	149
		110	1270	883	836	741	679	635	583	516	473	419
		140	2230	1400	1330	1180	1080	1010	930	820	750	670
		180	4270	3050	2890	2560	2340	2190	2010	1780	1630	1450
		250	10400	4870	4610	4080	3750	3500	3210	2850	2610	2310
8	360	040	30.6	24.5	23.2	20.5	18.8	17.6	16.2	14.3	13.1	11.6
		050	50.1	42.3	40.1	35.5	32.5	30.4	27.9	24.7	22.7	20.1
		063	85.1	71.4	67.6	59.9	54.9	51.4	47.1	41.7	38.3	33.9
		080	262	260	257	227	208	195	179	158	145	129
		110	738	564	534	473	434	406	372	330	302	268
		140	1640	1140	1080	960	880	820	760	670	610	540
		180	2860	1820	1720	1520	1400	1310	1200	1060	970	860
		250	5840	4210	3980	3530	3230	3020	2770	2460	2250	2000
9	360	040	30.6	24.5	23.2	20.6	18.9	17.6	16.2	14.3	13.1	11.6
		050	51.5	42.4	40.1	35.5	32.6	30.5	28.0	24.8	22.7	20.1
		063	85.1	71.6	67.8	60.0	55.0	51.5	47.2	41.8	38.3	34.0
		080	164	163	163	155	142	133	122	108	99	88
		110	591	433	410	363	333	312	286	253	232	206
		140	1160	920	871	771	708	662	607	538	493	437
		180	2860	1820	1720	1530	1400	1310	1200	1060	970	860
		250	5840	4210	3990	3530	3240	3030	2780	2460	2260	2000

● RGCS straight shaft

Cam curve/CV

Reduction ratio	Total index angle (deg)	Size	Static rated output torque (N·m)	Rated dynamic output torque (N·m)								
				Input shaft rotational speed (rpm)								
				30	60	90	120	150	200	300	400	600
10	360	040	10.9	10.8	10.8	10.8	10.8	10.8	10.8	9.6	8.8	7.8
		050	37.9	30.4	28.8	25.5	23.4	21.9	20.1	17.8	16.3	14.4
		063	85.1	71.7	67.8	60.1	55.1	51.5	47.3	41.9	38.4	34.0
		080	164	163	163	155	142	133	122	108	99	88
		110	359	357	353	312	286	268	246	218	200	177
		140	950	729	690	611	560	524	481	426	390	346
		180	2100	1470	1400	1240	1130	1060	970	860	790	700
		250	5840	4220	3990	3540	3240	3030	2780	2460	2260	2000
12	360	040	10.2	9.66	9.14	8.10	7.43	6.95	6.37	5.64	5.18	4.58
		050	12.8	12.7	12.7	12.7	12.7	12.7	12.7	11.3	10.4	9.2
		063	63.6	54.0	51.1	45.2	41.5	38.8	35.6	31.5	28.9	25.6
		080	152	104	99	87	80	75	69	61	56	49
		110	331	293	278	246	226	211	194	171	157	139
		140	760	559	530	469	430	402	369	327	300	265
		180	1490	1190	1120	990	910	850	780	690	640	560
		250	4150	3020	2860	2540	2330	2180	2000	1770	1620	1440

Roller gear cam drive (standard housing)

Output torque table

● RGCS flange shaft

Cam curve/CV

Reduction ratio	Total index angle (deg)	Size	Static rated output torque (N·m)	Rated dynamic output torque (N·m)								
				Input shaft rotational speed (rpm)								
				30	60	90	120	150	200	300	400	600
3	360	040	41.6	32.4	30.6	27.1	24.9	23.3	21.4	18.9	17.3	15.4
		050	50.1	40.2	38.0	33.7	30.9	28.9	26.5	23.5	21.5	19.1
		063	129	121	121	115	106	99	91	80	74	65
		080	262	246	243	215	197	185	169	150	138	122
		110	738	535	507	449	412	385	353	313	287	254
		140	1640	1080	1020	910	830	780	710	630	580	510
		180	3030	2080	1970	1740	1600	1500	1370	1220	1110	990
		250	10400	4650	4410	3900	3580	3350	3070	2720	2490	2210
4	360	040	30.6	23.8	22.6	20.0	18.3	17.1	15.7	13.9	12.8	11.3
		050	50.1	41.2	39.0	34.6	31.7	29.6	27.2	24.1	22.1	19.6
		063	85.1	69.5	65.8	58.3	53.5	50.0	45.9	40.6	37.3	33.0
		080	164	158	158	150	138	129	118	105	96	85
		110	591	421	399	353	324	303	278	246	226	200
		140	1160	893	845	749	687	642	589	522	478	424
		180	2860	1770	1670	1480	1360	1270	1160	1030	950	840
		250	5840	4100	3880	3430	3150	2950	2700	2390	2200	1940
5	360	040	10.9	10.6	10.6	10.6	10.6	10.6	10.6	9.4	8.7	7.7
		050	37.9	29.9	28.3	25.1	23.0	21.5	19.7	17.5	16.0	14.2
		063	63.6	52.9	50.1	44.4	40.7	38.1	34.9	30.9	28.4	25.1
		080	152	102	97	86	79	74	67	60	55	49
		110	359	350	346	307	281	263	241	214	196	174
		140	760	548	519	460	422	394	362	320	294	260
		180	1490	1160	1100	970	890	840	770	680	620	550
		250	4150	2970	2810	2490	2280	2130	1960	1730	1590	1410
6	360	040	41.6	33.9	32.1	28.4	26.1	24.4	22.4	19.8	18.2	16.1
		050	67.0	55.9	52.9	46.9	43.0	40.2	36.9	32.7	30.0	26.5
		063	129	127	127	121	111	103	95	84	77	68
		080	431	314	297	263	241	226	207	183	168	149
		110	1270	883	836	741	679	635	583	516	473	419
		140	2230	1400	1330	1180	1080	1010	930	820	750	670
		180	4270	3050	2890	2560	2340	2190	2010	1780	1630	1450
		250	10400	4870	4610	4080	3750	3500	3210	2850	2610	2310
8	360	040	30.6	24.5	23.2	20.5	18.8	17.6	16.2	14.3	13.1	11.6
		050	50.1	42.3	40.1	35.5	32.5	30.4	27.9	24.7	22.7	20.1
		063	85.1	71.4	67.6	59.9	54.9	51.4	47.1	41.7	38.3	33.9
		080	262	260	257	227	208	195	179	158	145	129
		110	738	564	534	473	434	406	372	330	302	268
		140	1640	1140	1080	960	880	820	760	670	610	540
		180	2860	1820	1720	1520	1400	1310	1200	1060	970	860
		250	5840	4210	3980	3530	3230	3020	2770	2460	2250	2000
9	360	040	30.6	24.5	23.2	20.6	18.9	17.6	16.2	14.3	13.1	11.6
		050	51.5	42.4	40.1	35.5	32.6	30.5	28.0	24.8	22.7	20.1
		063	85.1	71.6	67.8	60.0	55.0	51.5	47.2	41.8	38.3	34.0
		080	164	163	163	155	142	133	122	108	99	88
		110	591	433	410	363	333	312	286	253	232	206
		140	1160	920	871	771	708	662	607	538	493	437
		180	2860	1820	1720	1530	1400	1310	1200	1060	970	860
		250	5840	4210	3990	3530	3240	3030	2780	2460	2260	2000

● RGCS flange shaft

Cam curve/CV

Reduction ratio	Total index angle (deg)	Size	Static rated output torque (N·m)	Rated dynamic output torque (N·m)								
				Input shaft rotational speed (rpm)								
				30	60	90	120	150	200	300	400	600
10	360	040	10.9	10.8	10.8	10.8	10.8	10.8	10.8	9.6	8.8	7.8
		050	37.9	30.4	28.8	25.5	23.4	21.9	20.1	17.8	16.3	14.4
		063	85.1	71.7	67.8	60.1	55.1	51.5	47.3	41.9	38.4	34.0
		080	164	163	163	155	142	133	122	108	99	88
		110	359	357	353	312	286	268	246	218	200	177
		140	950	729	690	611	560	524	481	426	390	346
		180	2100	1470	1400	1240	1130	1060	970	860	790	700
		250	5840	4220	3990	3540	3240	3030	2780	2460	2260	2000
12	360	040	10.2	9.66	9.14	8.10	7.43	6.95	6.37	5.64	5.18	4.58
		050	12.8	12.7	12.7	12.7	12.7	12.7	12.7	11.3	10.4	9.2
		063	63.6	54.0	51.1	45.2	41.5	38.8	35.6	31.5	28.9	25.6
		080	152	104	99	87	80	75	69	61	56	49
		110	331	293	278	246	226	211	194	171	157	139
		140	760	559	530	469	430	402	369	327	300	265
		180	1490	1190	1120	990	910	850	780	690	640	560
		250	4150	3020	2860	2540	2330	2180	2000	1770	1620	1440

Roller gear cam drive (aluminum housing)

Output torque table

Index series

● RGIS straight shaft (1 dwell)

Cam curve/MS

Index number	Total index angle (deg)	Size	Static rated output torque (N·m)	Rated dynamic output torque (N·m)								
				Input shaft rotational speed (rpm)								
				30	60	90	120	150	200	300	400	600
2	270	040	10.9	5.41	4.71	4.34	4.10	3.91	3.69	3.00		
		050	19.9	10.0	8.7	8.1	7.6	7.2	6.8			
		063	85.1	36.0	29.7	24.2	20.9	18.7				
		080	164	81.8	71.2	62.3	53.8	48.0				
	300	040	30.6	13.4	11.0	9.0	7.8	7.0	6.0	4.9		
		050	50.1	23.4	19.3	15.7	13.6	12.2	10.5			
		063	85.1	39.2	32.3	26.3	22.8	20.3	17.5			
		080	242	117	96	78	68	61				
	330	040	30.6	14.4	11.9	9.7	8.4	7.5	6.5	5.3		
		050	50.1	25.1	20.7	16.9	14.6	13.1	11.3	9.2		
		063	119	48.0	39.5	32.3	27.9	24.9	21.5			
		080	242	125	103	84	73	65				
3	180	040	10.9	5.20	4.52	4.17	3.93	3.75	3.53	2.86		
		050	19.9	9.65	8.39	7.72	7.28	6.94	6.50			
		063	85.1	34.6	28.5	23.2	20.0	17.8				
		080	164	78.6	68.3	59.7	51.6	46.0				
	210	040	10.9	5.87	5.11	4.71	4.44	4.24	4.00	3.25		
		050	50.1	23.3	19.2	15.7	13.6	12.1	10.4			
		063	85.1	39.0	32.2	26.2	22.7	20.2	17.4			
		080	242	116	96	78	68	60				
	240	040	30.6	14.7	12.1	9.9	8.6	7.6	6.6	5.4	4.6	
		050	50.1	25.6	21.1	17.2	14.9	13.3	11.5	9.3		
		063	85.1	42.9	35.4	28.9	25.0	22.3	19.2			
		080	242	128	105	86	74	66	57			
	270	040	41.6	22.1	18.3	14.9	12.9	11.5	10.0	8.1	7.0	
		050	50.1	27.7	22.8	18.6	16.1	14.4	12.4	10.1		
		063	85.1	46.4	38.2	31.2	27.0	24.1	20.8			
		080	242	138	114	93	80	72	62			
	300	040	41.6	23.6	19.5	15.9	13.8	12.3	10.6	8.7	7.5	
		050	67.0	39.2	32.3	26.3	22.8	20.4	17.6	14.3		
		063	119	56.4	46.5	37.9	32.8	29.3	25.3			
		080	262	179	154	126	109	97	84			
	330	040	41.6	24.9	20.5	16.7	14.5	13.0	11.2	9.1	7.9	
		050	67.0	41.3	34.0	27.8	24.0	21.5	18.6	15.1		
		063	129	93.3	81.2	71.1	61.5	55.0	47.6			
		080	262	189	163	133	115	103	89			
4	150	040	10.2	5.18	4.26	3.48	3.01	2.68	2.31	1.85		
		050	12.8	6.92	6.01	5.53	5.21	4.96	4.64			
		063	63.6	27.5	22.6	18.4	15.9	14.1	12.1			
		080	108	46.4	38.2	31.1	26.8	23.8				
	180	040	10.9	6.28	5.47	5.04	4.75	4.54	4.28	3.48	2.97	
		050	19.9	11.6	10.1	9.3	8.8	8.4	7.9	7.2		
		063	63.6	31.4	25.8	21.1	18.2	16.2	13.9			
		080	152	60.4	49.8	40.6	35.0	31.2	26.8			
	210	040	17.9	11.5	10.1	9.3	8.7	8.2	7.1	5.8	5.0	
		050	19.9	12.8	11.2	10.3	9.7	9.3	8.7	8.0		
		063	63.6	34.7	28.5	23.3	20.1	18.0	15.5			
		080	164	105	91	80	69	62	53			
	240	040	17.9	12.4	10.8	10.4	9.5	8.9	7.7	6.3	5.4	
		050	19.9	13.8	12.0	11.1	10.5	10.0	9.4	8.6		
		063	63.6	37.4	30.8	25.2	21.8	19.4	16.8			
		080	164	113	99	86	75	67	58			
	270	040	17.9	13.2	11.5	10.6	10.0	9.4	8.2	6.7	5.7	
		050	19.9	14.7	12.8	11.8	11.1	10.6	10.0	9.2		

● RGIS straight shaft (1 dwell)

Cam curve/MS

Index number	Total index angle (deg)	Size	Static rated output torque (N·m)	Rated dynamic output torque (N·m)								
				Input shaft rotational speed (rpm)								
				30	60	90	120	150	200	300	400	600
4	270	063	63.6	39.8	32.8	26.8	23.2	20.7	17.9			
		080	164	120	105	92	79	71	61			
	300	040	30.6	19.0	15.7	12.8	11.1	9.9	8.6	7.0	6.0	
		050	50.1	33.1	27.3	22.3	19.3	17.2	14.9	12.1		
		063	85.1	55.6	45.8	37.4	32.4	28.9	25.0			
		080	164	127	110	96	84	75	65			
	330	040	30.6	19.9	16.4	13.4	11.6	10.3	9.0	7.3	6.3	
		050	50.1	34.5	28.4	23.2	20.1	17.9	15.5	12.6		
		063	85.1	58.0	47.8	39.0	33.8	30.2	26.1			
		080	164	132	115	101	87	78	67			
5	120	040	7.19	3.74	3.08	2.51	2.17	1.93	1.66	1.31		
		050	13.1	6.32	5.20	4.23	3.64	3.23	2.74	2.08		
		063	16.4	8.51	7.38	6.76	6.32	5.97	5.46			
		080	80.0	34.2	28.1	22.8	19.6	17.3				
	150	040	7.19	4.33	3.57	2.91	2.52	2.25	1.93	1.55	1.30	
		050	12.8	7.84	6.82	6.28	5.91	5.64	5.29	4.23		
		063	25.3	14.7	12.8	11.8	11.1	10.5	9.8			
		080	108	53.3	43.9	35.7	30.8	27.4	23.5			
	180	040	10.2	6.53	5.38	4.39	3.80	3.40	2.93	2.37	2.02	
		050	12.8	8.68	7.55	6.96	6.56	6.26	5.89	4.76		
		063	25.3	16.5	14.3	13.2	12.4	11.8	11.1			
		080	108	59.7	49.1	40.1	34.6	30.9	26.5			
	210	040	14.8	7.05	5.81	4.74	4.11	3.67	3.17	2.57	2.21	
		050	12.8	9.3	8.1	7.5	7.0	6.7	6.3	5.1		
		063	63.6	38.4	31.6	25.8	22.3	19.9	17.2			
		080	152	74.0	61.0	49.7	43.0	38.4	33.1			
	240	040	10.9	8.19	7.13	6.58	6.21	5.93	5.60	4.58	3.94	
		050	37.9	23.2	19.1	15.6	13.5	12.1	10.4	8.5		
		063	63.6	40.9	33.7	27.5	23.8	21.3	18.4			
		080	152	78.9	65.0	53.0	45.9	41.0	35.4			
	270	040	10.9	8.62	7.51	6.92	6.53	6.25	5.89	4.82	4.16	
		050	37.9	24.4	20.1	16.4	14.2	12.7	11.0	8.9		
		063	63.6	43.0	35.5	28.9	25.0	22.4	19.3			
		080	152	83.0	68.4	55.8	48.3	43.2	37.3			
	300	040	10.9	8.99	7.83	7.22	6.81	6.51	6.14	5.03	4.35	
		050	37.9	25.4	20.9	17.1	14.8	13.2	11.4	9.3		
		063	63.6	44.8	37.0	30.2	26.1	23.3	20.2			
		080	152	86.5	71.3	58.2	50.4	45.0	38.9			
	330	040	10.9	9.31	8.10	7.47	7.05	6.74	6.36	5.21	4.50	
		050	37.9	26.3	21.7	17.7	15.3	13.7	11.8	9.6		
		063	63.6	46.4	38.3	31.2	27.0	24.2	20.9			
		080	152	89.6	73.8	60.3	52.2	46.6	40.3			
6	90	040	10.9	4.85	4.22	3.88	3.66	3.49	3.27	2.60		
		050	19.9	9.00	7.82	7.19	6.75	6.42	5.97			
		063	85.1	32.2	26.5	21.6	18.6	16.5				
		080	164	73.3	63.7	55.6	47.9	42.5				
	120	040	41.6	19.1	15.8	12.9	11.1	10.0	8.6	7.0	6.0	
		050	67.0	31.8	26.2	21.4	18.5	16.5	14.2	11.4		
		063	119	45.7	37.7	30.7	26.5	23.6	20.3			
		080	262	145	125	102	88	79	68			
	150	040	41.6	22.0	18.1	14.8	12.8	11.5	9.9	8.1	6.9	
		050	67.0	36.5	30.1	24.6	21.3	19.0	16.4	13.3		
		063	129	82.6	71.9	62.9	54.4	48.6	42.0			
		080	262	167	144	117	102	91	78			

Roller gear cam drive (aluminum housing)

Output torque table

Index series

● RGIS straight shaft (1 dwell)

Cam curve/MS

Index number	Total index angle (deg)	Size	Static rated output torque (N·m)	Rated dynamic output torque (N·m) Input shaft rotational speed (rpm) 30	60	90	120	150	200	300	400	600
6	180	040	41.6	24.3	20.0	16.3	14.1	12.6	10.9	8.9	7.7	
		050	67.0	40.2	33.1	27.1	23.4	20.9	18.1	14.7		
		063	129	91.0	79.2	69.3	60.0	53.6	46.4			
		080	431	224	185	151	131	117	101			
	210	040	41.6	26.1	21.5	17.6	15.2	13.6	11.8	9.6	8.3	
		050	67.0	43.2	35.6	29.0	25.1	22.5	19.4	15.8		
		063	129	97.8	85.1	74.5	64.5	57.6	49.8			
		080	431	241	199	162	140	126	109			
	240	040	41.6	27.6	22.7	18.5	16.1	14.4	12.4	10.1	8.8	
		050	67.0	45.6	37.6	30.7	26.5	23.7	20.5	16.7		
		063	129	103	90	79	68	61	53			
		080	431	255	210	171	148	133	115			
	270	040	41.6	28.8	23.7	19.4	16.8	15.0	13.0	10.6	9.2	
		050	67.0	47.6	39.2	32.0	27.7	24.8	21.5	17.5		
		063	129	108	94	82	71	64	55			
		080	431	266	219	179	155	139	120			
	300	040	41.6	29.9	24.6	20.1	17.4	15.6	13.5	11.0	9.5	
		050	67.0	49.3	40.6	33.2	28.7	25.7	22.2	18.1		
		063	129	112	97	85	74	66	57			
		080	431	276	228	186	161	144	124			
	330	040	41.6	30.8	25.4	20.7	17.9	16.1	13.9	11.3	9.8	
		050	67.0	50.8	41.9	34.2	29.6	26.5	22.9	18.7		
		063	129	115	100	88	76	68	59			
		080	431	285	235	192	166	148	128			
8	90	040	10.9	5.86	5.10	4.70	4.43	4.22	3.97	3.20	2.68	
		050	50.1	23.2	19.1	15.6	13.5	12.0	10.3	8.2		
		063	85.1	38.9	32.1	26.1	22.5	20.0	17.1			
		080	164	88.5	77.0	67.3	58.0	51.6	44.1			
	120	040	30.6	15.9	13.1	10.7	9.3	8.3	7.2	5.8	5.0	
		050	50.1	27.7	22.8	18.6	16.1	14.4	12.4	10.0		
		063	85.1	46.4	38.3	31.2	27.0	24.1	20.7			
		080	242	138	114	93	80	72	62			
	150	040	30.6	17.8	14.6	12.0	10.4	9.3	8.0	6.5	5.6	
		050	50.1	30.9	25.4	20.8	18.0	16.1	13.9	11.2		
		063	85.1	51.9	42.8	34.9	30.2	27.0	23.3			
		080	242	155	127	104	90	80	69			
	180	040	30.6	19.2	15.8	12.9	11.2	10.0	8.7	7.0	6.1	
		050	50.1	33.3	27.4	22.4	19.4	17.3	15.0	12.2		
		063	85.1	56.0	46.2	37.7	32.6	29.1	25.2			
		080	242	167	138	112	97	87	75			
	210	040	30.6	20.3	16.7	13.7	11.8	10.6	9.2	7.5	6.5	
		050	50.1	35.2	29.0	23.7	20.5	18.3	15.9	12.9		
		063	85.1	59.3	48.9	39.9	34.5	30.9	26.7			
		080	242	177	146	119	103	92	80			
	240	040	30.6	21.2	17.5	14.3	12.4	11.1	9.6	7.8	6.8	
		050	50.1	36.8	30.3	24.7	21.4	19.2	16.6	13.5		
		063	85.1	62.0	51.1	41.7	36.1	32.3	27.9			
		080	242	185	152	124	108	96	83			
	270	040	30.6	22.0	18.1	14.8	12.8	11.5	9.9	8.1	7.0	
		050	50.1	38.1	31.4	25.6	22.2	19.9	17.2	14.0		
		063	85.1	64.2	52.9	43.2	37.4	33.5	28.9			
		080	262	233	201	164	142	127	110			
	300	040	30.6	22.7	18.7	15.3	13.2	11.8	10.2	8.4	7.2	
		050	50.1	39.3	32.4	26.4	22.9	20.5	17.7	14.4		

● RGIS straight shaft (1 dwell)

Cam curve/MS

Index number	Total index angle (deg)	Size	Static rated output torque (N·m)	Rated dynamic output torque (N·m)								
				Input shaft rotational speed (rpm)								
				30	60	90	120	150	200	300	400	600
8	300	063	85.1	66.2	54.6	44.5	38.6	34.5	29.8			
		080	262	241	207	169	146	131	113			
	330	040	30.6	23.3	19.2	15.7	13.6	12.1	10.5	8.6	7.4	
		050	50.1	40.3	33.2	27.1	23.5	21.0	18.2	14.8		
		063	85.1	67.9	56.0	45.7	39.6	35.4	30.6			
		080	262	247	212	173	150	134	116			
9	90	040	10.9	6.26	5.44	5.01	4.73	4.51	4.24	3.43	2.89	
		050	37.9	17.8	14.6	11.9	10.3	9.2	7.9	6.2		
		063	63.6	31.2	25.7	20.9	18.1	16.0	13.7			
		080	152	60.2	49.6	40.3	34.8	30.9	26.2			
	120	040	10.9	7.35	6.40	5.90	5.56	5.32	5.01	4.08	3.49	
		050	37.9	20.8	17.1	14.0	12.1	10.8	9.3	7.5		
		063	63.6	36.7	30.2	24.6	21.3	19.0	16.3			
		080	152	70.8	58.3	47.5	41.0	36.6	31.4			
	150	040	10.9	8.13	7.08	6.52	6.16	5.89	5.55	4.53	3.90	
		050	37.9	23.0	18.9	15.5	13.4	12.0	10.3	8.4		
		063	85.1	54.0	44.5	36.3	31.4	28.0	24.2			
		080	164	123	107	94	81	72	62			
	180	040	10.9	8.72	7.59	7.00	6.61	6.31	5.96	4.87	4.20	
		050	51.5	34.4	28.3	23.1	20.0	17.9	15.5	12.6		
		063	85.1	57.9	47.7	38.9	33.7	30.1	26.0			
		080	164	132	115	100	87	78	67			
	210	040	30.6	20.9	17.2	14.1	12.2	10.9	9.4	7.7	6.6	
		050	51.5	36.2	29.8	24.3	21.1	18.8	16.3	13.3		
		063	85.1	60.9	50.2	41.0	35.5	31.7	27.4			
		080	164	139	121	106	92	82	71			
	240	040	30.6	21.8	17.9	14.6	12.7	11.3	9.8	8.0	6.9	
		050	51.5	37.7	31.0	25.3	21.9	19.6	17.0	13.8		
		063	85.1	63.5	52.3	42.7	37.0	33.1	28.6			
		080	164	145	126	110	95	85	74			
	270	040	30.6	22.5	18.5	15.1	13.1	11.7	10.2	8.3	7.2	
		050	51.5	38.9	32.1	26.2	22.7	20.3	17.6	14.3		
		063	85.1	65.7	54.1	44.2	38.2	34.2	29.6			
		080	164	150	130	114	99	88	76			
	300	040	30.6	23.2	19.1	15.6	13.5	12.1	10.4	8.5	7.4	
		050	51.5	40.0	33.0	26.9	23.3	20.9	18.1	14.7		
		063	85.1	67.5	55.7	45.4	39.4	35.2	30.5			
		080	164	154	134	117	102	91	79			
	330	040	30.6	23.7	19.6	16.0	13.8	12.4	10.7	8.7	7.6	
		050	51.5	41.0	33.8	27.6	23.9	21.4	18.5	15.1		
		063	85.1	69.2	57.1	46.6	40.3	36.1	31.2			
		080	164	158	137	120	104	93	81			
10	90	040	10.2	6.09	5.02	4.09	3.54	3.16	2.72	2.18	1.82	
		050	12.8	8.10	7.04	6.48	6.10	5.81	5.44	4.31		
		063	25.3	15.4	13.4	12.3	11.5	10.9	10.2			
		080	108	55.6	45.8	37.3	32.1	28.6	24.3			
	120	040	10.9	7.65	6.65	6.13	5.79	5.53	5.21	4.25	3.64	
		050	37.9	21.6	17.8	14.5	12.6	11.2	9.7	7.8		
		063	63.6	38.2	31.4	25.6	22.2	19.8	17.0			
		080	152	73.6	60.6	49.4	42.7	38.1	32.7			
	150	040	10.9	8.39	7.30	6.73	6.35	6.07	5.73	4.68	4.03	
		050	37.9	23.7	19.5	15.9	13.8	12.3	10.7	8.6		
		063	63.6	41.8	34.5	28.1	24.3	21.7	18.7			
		080	152	80.7	66.5	54.3	46.9	41.9	36.1			

Roller gear cam drive (aluminum housing)

Output torque table

● RGIS straight shaft (1 dwell)

Cam curve/MS

Index number	Total index angle (deg)	Size	Static rated output torque (N·m)	Rated dynamic output torque (N·m)								
				Input shaft rotational speed (rpm)								
				30	60	90	120	150	200	300	400	600
10	180	040	10.9	8.95	7.79	7.18	6.78	6.48	6.11	5.00	4.31	
		050	37.9	25.2	20.8	17.0	14.7	13.1	11.4	9.2		
		063	85.1	59.4	48.9	39.9	34.6	30.9	26.7			
		080	152	86.1	71.0	57.9	50.1	44.8	38.7			
	210	040	10.9	9.39	8.18	7.54	7.12	6.80	6.42	5.26	4.54	
		050	37.9	26.5	21.8	17.8	15.4	13.8	11.9	9.7		
		063	85.1	62.3	51.3	41.9	36.3	32.4	28.1			
		080	164	142	124	108	94	84	72			
	240	040	10.9	9.76	8.50	7.84	7.40	7.07	6.67	5.47	4.73	
		050	37.9	27.5	22.7	18.5	16.0	14.3	12.4	10.1		
		063	85.1	64.7	53.4	43.6	37.7	33.7	29.2			
		080	164	148	128	112	97	87	75			
	270	040	10.9	10.1	8.8	8.1	7.6	7.3	6.9	5.6	4.9	
		050	37.9	28.4	23.4	19.1	16.5	14.8	12.8	10.4		
		063	85.1	66.8	55.1	45.0	38.9	34.8	30.1			
		080	164	152	133	116	100	90	78			
	300	040	10.9	10.4	9.0	8.3	7.8	7.5	7.1	5.8	5.0	
		050	37.9	29.2	24.0	19.6	17.0	15.2	13.2	10.7		
		063	85.1	68.7	56.6	46.2	40.0	35.8	31.0			
		080	164	157	136	119	103	92	80			
	330	040	10.9	10.6	9.2	8.5	8.0	7.7	7.3	5.9	5.1	
		050	37.9	29.9	24.6	20.1	17.4	15.6	13.5	11.0		
		063	85.1	70.3	57.9	47.3	41.0	36.6	31.7			
		080	164	160	139	122	106	95	82			
12	90	040	7.19	4.80	3.95	3.23	2.79	2.49	2.14	1.71	1.43	
		050	12.8	8.69	7.55	6.96	6.55	6.25	5.85	4.67		
		063	25.3	16.6	14.5	13.3	12.5	11.9	11.1			
		080	108	60.3	49.6	40.4	34.9	31.0	26.5			
	120	040	7.19	5.38	4.44	3.62	3.13	2.80	2.42	1.95	1.66	
		050	12.8	9.74	8.48	7.81	7.37	7.03	6.62	5.36		
		063	25.3	18.9	16.4	15.1	14.2	13.6	12.7			
		080	108	68.4	56.4	46.0	39.7	35.4	30.5			
	150	040	10.2	7.93	6.53	5.33	4.62	4.13	3.57	2.90	2.49	
		050	12.8	10.5	9.1	8.4	7.9	7.6	7.1	5.8		
		063	25.3	20.4	17.8	16.4	15.5	14.8	13.9			
		080	108	74.1	61.1	49.8	43.1	38.5	33.2			
	180	040	10.2	8.36	6.89	5.63	4.87	4.36	3.77	3.07	2.64	
		050	12.8	11.1	9.6	8.9	8.4	8.0	7.5	6.2		
		063	25.3	21.6	18.8	17.4	16.4	15.6	14.7			
		080	108	78.5	64.7	52.8	45.7	40.8	35.3			
	210	040	10.2	8.72	7.18	5.87	5.08	4.54	3.93	3.20	2.76	
		050	12.8	11.5	10.0	9.2	8.7	8.3	7.9	6.4		
		063	25.3	22.6	19.7	18.1	17.1	16.4	15.4			
		080	108	82.0	67.6	55.1	47.7	42.7	36.9			
	240	040	10.2	9.02	7.43	6.07	5.25	4.70	4.07	3.32	2.86	
		050	12.8	11.9	10.4	9.6	9.0	8.6	8.1	6.7		
		063	25.3	23.4	20.4	18.8	17.7	16.9	16.0			
		080	108	84.9	70.0	57.1	49.5	44.2	38.2			
	270	040	10.9	10.4	9.0	8.3	7.8	7.5	7.0	5.8	5.0	
		050	19.9	19.0	16.6	15.3	14.4	13.8	13.0	10.7		
		063	25.3	24.1	21.0	19.4	18.3	17.5	16.5			
		080	108	87.5	72.1	58.8	50.9	45.5	39.4			
	300	040	10.9	10.6	9.2	8.5	8.0	7.7	7.2	5.9	5.1	
		050	19.9	19.5	17.0	15.6	14.8	14.1	13.3	11.0		

RGIS straight shaft (1 dwell)

Cam curve/MS

Index number	Total index angle (deg)	Size	Static rated output torque (N·m)	Rated dynamic output torque (N·m)								
				Input shaft rotational speed (rpm)								
				30	60	90	120	150	200	300	400	600
12	300	063	63.6	53.0	43.7	35.7	30.9	27.6	23.9			
		080	152	102	84	69	60	53	46			
	330	040	10.9	10.7	9.4	8.7	8.2	7.8	7.4	6.1	5.2	
		050	19.9	19.6	17.4	16.0	15.1	14.4	13.6	11.3		
		063	63.6	53.4	44.7	36.5	31.6	28.2	24.4			
		080	152	103	86	70	61	55	47			
15	90	080	31.8	22.7	19.7	18.1	17.0	16.2	15.0			
	120	080	80.0	54.0	44.5	36.3	31.4	28.0	24.1			
	150	080	80.0	57.8	47.6	38.9	33.6	30.0	25.9			
	180	080	80.0	60.8	50.1	40.9	35.4	31.6	27.3			
	210	080	80.0	63.2	52.1	42.5	36.8	32.9	28.4			
	240	080	80.0	65.2	53.7	43.9	38.0	34.0	29.4			
	270	080	80.0	67.0	55.2	45.1	39.0	34.9	30.2			
	300	080	80.0	67.4	56.6	46.2	40.0	35.7	30.9			
	330	080	80.0	67.5	57.8	47.2	40.8	36.5	31.6			
16	90	080	31.8	23.1	20.1	18.5	17.4	16.5	15.3			
	120	080	31.8	25.6	22.2	20.5	19.3	18.4	17.2			
	150	080	31.8	27.3	23.8	21.9	20.6	19.7	18.5			
	180	080	80.0	61.4	50.6	41.3	35.7	31.9	27.6			
	210	080	80.0	63.7	52.5	42.9	37.1	33.2	28.7			
	240	080	80.0	65.8	54.2	44.3	38.3	34.2	29.6			
	270	080	80.0	67.3	55.7	45.5	39.4	35.2	30.4			
	300	080	80.0	67.5	57.0	46.5	40.3	36.0	31.2			
	330	080	80.0	67.6	58.2	47.5	41.1	36.8	31.8			

Roller gear cam drive (aluminum housing)

Output torque table

● RGIS straight shaft (2 dwell)

Cam curve/MS

Index number	Total index angle (deg)	Size	Static rated output torque (N·m)	Rated dynamic output torque (N·m)								
				Input shaft rotational speed (rpm)								
				15	30	45	60	75	100	150	200	300
16	120	040	16.1	11.1	9.6	8.9	8.4	8.0	7.5	6.2	5.3	4.3
		050	19.9	13.8	12.0	11.1	10.5	10.0	9.4	8.6	7.7	6.1
		063	63.6	37.4	30.8	25.2	21.8	19.4	16.8	13.5	11.4	
		080	152	72.2	59.5	48.5	42.0	37.5	32.3	25.9	21.9	
	150	040	30.6	19.0	15.7	12.8	11.1	9.9	8.6	7.0	6.0	4.9
		050	50.1	33.1	27.3	22.3	19.3	17.2	14.9	12.1	10.4	8.3
		063	85.1	55.6	45.8	37.4	32.4	28.9	25.0	20.3	17.4	
		080	164	127	110	96	84	75	65	52	45	
	180	040	30.6	20.6	17.0	13.8	12.0	10.7	9.3	7.6	6.5	5.3
		050	50.1	35.7	29.4	24.0	20.8	18.6	16.1	13.1	11.3	9.1
		063	119	68.5	56.5	46.1	39.9	35.7	30.9	25.1	21.6	
		080	242	179	148	120	104	93	81	66	57	
	210	040	30.6	21.8	17.9	14.7	12.7	11.3	9.8	8.0	6.9	5.6
		050	50.1	37.7	31.1	25.4	22.0	19.7	17.0	13.9	12.0	9.7
		063	119	72.5	59.8	48.8	42.2	37.8	32.7	26.6	23.0	
		080	242	190	156	128	110	99	85	70	60	
	240	040	30.6	22.8	18.8	15.3	13.3	11.9	10.3	8.4	7.3	5.9
		050	50.1	39.4	32.5	26.5	23.0	20.5	17.8	14.5	12.5	10.2
		063	119	75.8	62.5	51.0	44.2	39.5	34.2	27.9	24.0	
		080	242	198	163	133	115	103	89	73	63	
	270	040	30.6	23.5	19.4	15.9	13.8	12.3	10.6	8.7	7.5	6.1
		050	50.1	40.7	33.7	27.5	23.8	21.3	18.4	15.0	13.0	10.6
		063	119	78.3	64.7	52.9	45.8	40.9	35.4	28.9	25.0	
		080	242	205	169	138	120	107	92.7	75.6	65.3	
	300	040	30.6	23.7	20.0	16.4	14.2	12.7	11.0	9.0	7.8	6.3
		050	50.1	41.1	34.7	28.3	24.5	21.9	19.0	15.5	13.4	10.9
		063	119	79.0	66.7	54.5	47.2	42.2	36.5	29.8	25.7	
		080	262	252	222	181	157	140	121	99	86	
	330	040	30.6	23.9	20.6	16.8	14.5	13.0	11.3	9.2	8.0	6.5
		050	50.1	41.3	35.6	29.1	25.2	22.5	19.5	15.9	13.8	11.2
		063	119	79.5	68.5	55.9	48.4	43.3	37.5	30.6	26.4	
		080	262	253	228	186	161	144	125	102	88	
18	120	040	10.9	7.88	6.86	6.32	5.97	5.70	5.38	4.40	3.79	3.03
		050	37.9	22.3	18.4	15.0	13.0	11.6	10.0	8.1	7.0	5.5
		063	85.1	52.3	43.1	35.2	30.4	27.2	23.5	19.0	16.2	
		080	152	75.8	62.5	51.0	44.1	39.4	34.0	27.3	23.1	
	150	040	10.9	8.71	7.59	6.99	6.60	6.31	5.96	4.88	4.21	3.40
		050	37.9	24.6	20.3	16.6	14.3	12.8	11.1	9.0	7.8	6.2
		063	85.1	57.8	47.7	38.9	33.7	30.1	26.0	21.1	18.1	
		080	164	132	115	100	87	78	67	55	47	
	180	040	30.6	21.2	17.5	14.3	12.4	11.1	9.6	7.8	6.8	5.5
		050	51.5	36.8	30.3	24.8	21.5	19.2	16.6	13.5	11.7	9.4
		063	85.1	62.0	51.1	41.7	36.1	32.3	27.9	22.7	19.6	
		080	164	141	123	108	93	83	72	59	51	
	210	040	30.6	22.4	18.4	15.1	13.0	11.7	10.1	8.2	7.1	5.8
		050	51.5	38.8	31.9	26.1	22.6	20.2	17.5	14.3	12.3	10.0
		063	85.1	65.3	53.8	44.0	38.1	34.0	29.4	24.0	20.7	
		080	164	149	130	113	98	88	76	62	53	
	240	040	30.6	23.3	19.2	15.7	13.6	12.2	10.5	8.6	7.4	6.1
		050	51.5	40.4	33.3	27.2	23.5	21.0	18.2	14.9	12.8	10.4
		063	85.1	68.1	56.1	45.8	39.6	35.5	30.7	25.0	21.6	
		080	164	155	135	118	102	91	79	65	56	
	270	040	30.6	23.7	19.9	16.2	14.1	12.6	10.9	8.9	7.7	6.3
		050	51.5	41.1	34.4	28.1	24.3	21.7	18.8	15.4	13.3	10.8

RGIS straight shaft (2 dwell)

Cam curve/MS

Index number	Total index angle (deg)	Size	Static rated output torque (N·m)	Rated dynamic output torque (N·m)								
				Input shaft rotational speed (rpm)								
				15	30	45	60	75	100	150	200	300
18	270	063	85.1	69.3	58.0	47.4	41.0	36.7	31.7	25.9	22.4	
		080	164	158	140	122	106	95	82	67	58	
	300	040	30.6	23.9	20.5	16.7	14.5	12.9	11.2	9.1	7.9	6.4
		050	51.5	41.4	35.4	28.9	25.0	22.4	19.4	15.8	13.7	11.1
		063	85.1	69.8	59.7	48.7	42.2	37.7	32.7	26.6	23.0	
		080	164	159	144	126	109	97	84	69	59	
	330	040	30.6	24.1	21.0	17.1	14.8	13.3	11.5	9.4	8.1	6.6
		050	51.5	41.6	36.2	29.6	25.6	22.9	19.8	16.2	14.0	11.4
		063	85.1	70.2	61.1	49.9	43.2	38.7	33.5	27.3	23.6	
		080	164	160	147	129	112	100	86	70	61	
20	90	040	10.2	6.53	5.38	4.39	3.80	3.40	2.93	2.37	2.02	1.57
		050	19.9	13.1	11.4	10.5	9.8	9.4	8.8	7.2	6.1	4.7
		063	25.3	16.5	14.3	13.2	12.4	11.8	11.1	10.0	8.7	
		080	108	59.7	49.1	40.1	34.6	30.9	26.5	21.1	17.4	
	120	040	10.9	8.19	7.13	6.58	6.21	5.93	5.60	4.58	3.94	3.17
		050	37.9	23.2	19.1	15.6	13.5	12.1	10.4	8.5	7.3	5.7
		063	63.6	40.9	33.7	27.5	23.8	21.3	18.4	14.8	12.6	
		080	152	78.9	65.0	53.0	45.9	41.0	35.4	28.5	24.2	
	150	040	10.9	8.99	7.83	7.22	6.81	6.51	6.14	5.03	4.35	3.51
		050	37.9	25.4	20.9	17.1	14.8	13.2	11.4	9.3	8.0	6.4
		063	63.6	44.8	37.0	30.2	26.1	23.3	20.2	16.4	14.0	
		080	152	86.5	71.3	58.2	50.4	45.0	38.9	31.5	27.0	
	180	040	10.9	9.59	8.35	7.70	7.27	6.95	6.56	5.37	4.64	3.77
		050	37.9	27.1	22.3	18.2	15.8	14.1	12.2	9.9	8.6	6.9
		063	63.6	47.8	39.4	32.2	27.9	24.9	21.5	17.5	15.1	
		080	152	92.3	76.1	62.1	53.8	48.1	41.6	33.8	29.0	
	210	040	10.9	10.1	8.8	8.1	7.6	7.3	6.9	5.6	4.9	4.0
		050	37.9	28.4	23.4	19.1	16.5	14.8	12.8	10.4	9.0	7.3
		063	63.6	50.2	41.4	33.8	29.2	26.1	22.6	18.4	15.9	
		080	164	152	132	116	100	90	78	63	55	
	240	040	10.9	10.4	9.1	8.4	7.9	7.6	7.2	5.9	5.1	4.1
		050	37.9	29.4	24.3	19.8	17.2	15.4	13.3	10.9	9.4	7.6
		063	63.6	52.0	43.0	35.1	30.4	27.2	23.5	19.2	16.5	
		080	164	158	138	120	104	93	81	66	57	
	270	040	10.9	10.5	9.4	8.7	8.2	7.8	7.4	6.1	5.2	4.3
		050	37.9	29.7	25.1	20.5	17.7	15.9	13.7	11.2	9.7	7.9
		063	63.6	52.5	44.4	36.2	31.4	28.1	24.3	19.8	17.1	
		080	164	159	142	124	108	96	83	68	59	
	300	040	10.9	10.6	9.7	8.9	8.4	8.0	7.6	6.2	5.4	4.4
		050	37.9	29.8	25.8	21.0	18.2	16.3	14.1	11.5	10.0	8.1
		063	85.1	70.2	60.7	49.5	42.9	38.4	33.2	27.1	23.4	
		080	164	160	146	128	111	99	86	70	60	
	330	040	10.9	10.6	9.9	9.1	8.6	8.2	7.8	6.4	5.5	4.5
		050	37.9	30.0	26.4	21.5	18.7	16.7	14.4	11.8	10.2	8.3
		063	85.1	70.5	62.1	50.7	43.9	39.3	34.0	27.7	24.0	
		080	164	161	150	131	113	101	88	72	62	
24	90	040	7.19	5.14	4.24	3.46	2.99	2.67	2.31	1.87	1.59	1.23
		050	12.8	9.31	8.10	7.47	7.04	6.72	6.33	5.13	4.35	3.29
		063	25.3	17.8	15.5	14.3	13.5	12.8	12.0	10.9	9.6	
		080	80.0	48.3	39.8	32.5	28.0	25.0	21.5	17.1	14.1	
	120	040	7.19	5.77	4.75	3.88	3.36	3.00	2.60	2.11	1.81	1.40
		050	12.8	10.4	9.1	8.4	7.9	7.6	7.1	5.8	5.0	3.9
		063	25.3	20.2	17.6	16.2	15.3	14.6	13.8	12.6	11.2	
		080	108	73.3	60.4	49.3	42.7	38.1	32.9	26.6	22.6	

Roller gear cam drive (aluminum housing)

Output torque table

● RGIS straight shaft (2 dwell)

Cam curve/MS

Index number	Total index angle (deg)	Size	Static rated output torque (N·m)	Rated dynamic output torque (N·m)								
				Input shaft rotational speed (rpm)								
				15	30	45	60	75	100	150	200	300
24	150	040	10.2	8.50	7.00	5.72	4.95	4.43	3.83	3.12	2.69	2.17
		050	12.8	11.2	9.8	9.0	8.5	8.1	7.7	6.3	5.4	4.3
		063	63.6	47.0	38.7	31.6	27.3	24.4	21.1	17.2	14.7	
		080	108	79.5	65.5	53.4	46.3	41.3	35.7	29.0	24.8	
	180	040	10.2	8.96	7.39	6.03	5.22	4.67	4.04	3.30	2.85	2.31
		050	12.8	11.8	10.3	9.5	9.0	8.6	8.1	6.6	5.7	4.6
		063	63.6	49.7	41.0	33.4	29.0	25.9	22.4	18.2	15.7	
		080	108	84.1	69.3	56.6	49.0	43.8	37.9	30.8	26.5	
	210	040	10.2	9.34	7.70	6.29	5.44	4.87	4.22	3.44	2.97	2.41
		050	12.8	12.3	10.7	9.9	9.4	8.9	8.4	6.9	6.0	4.8
		063	63.6	51.9	42.8	34.9	30.2	27.0	23.4	19.1	16.4	
		080	152	100	83	67	58	52	45	37	32	
	240	040	10.2	9.47	7.96	6.50	5.63	5.04	4.36	3.56	3.08	2.50
		050	12.8	12.5	11.1	10.2	9.7	9.2	8.7	7.2	6.2	5.0
		063	63.6	52.7	44.3	36.2	31.3	28.0	24.3	19.8	17.1	
		080	152	102	86	70	60	54	47	38	33	
	270	040	10.2	9.51	8.19	6.69	5.79	5.18	4.49	3.66	3.17	2.58
		050	37.9	29.9	25.8	21.1	18.2	16.3	14.1	11.5	9.9	8.1
		063	63.6	53.0	45.6	37.3	32.3	28.9	25.0	20.4	17.6	
		080	152	102	88	72	62	56	48	39	34	
	300	040	10.2	9.55	8.40	6.86	5.94	5.31	4.60	3.75	3.25	2.65
		050	37.9	30.1	26.4	21.6	18.7	16.7	14.5	11.8	10.2	8.3
		063	63.6	53.2	46.8	38.2	33.1	29.6	25.6	20.9	18.1	
		080	152	103	90	74	64	57	49	40	35	
	330	040	10.2	9.57	8.58	7.01	6.07	5.43	4.70	3.84	3.32	2.71
		050	37.9	30.2	27.0	22.1	19.1	17.1	14.8	12.1	10.5	8.5
		063	63.6	53.4	47.9	39.1	33.8	30.3	26.2	21.4	18.5	
		080	152	103	92	75	65	58	51	41	36	
30	90	080	31.8	24.3	21.2	19.5	18.4	17.5	16.4	14.8	12.9	
	120	080	80.0	57.9	47.7	38.9	33.7	30.1	26.0	21.0	17.8	
	150	080	80.0	62.0	51.1	41.7	36.1	32.2	27.9	22.6	19.4	
	180	080	80.0	65.1	53.7	43.8	37.9	33.9	29.3	23.8	20.5	
	210	080	80.0	66.6	55.8	45.5	39.4	35.3	30.5	24.8	21.4	
	240	080	80.0	67.0	57.6	47.0	40.7	36.4	31.5	25.7	22.2	
	270	080	80.0	67.2	59.2	48.3	41.8	37.4	32.4	26.4	22.8	
	300	080	80.0	67.4	60.6	49.5	42.9	38.3	33.2	27.1	23.4	
	330	080	80.0	67.5	61.9	50.5	43.8	39.1	33.9	27.6	23.9	
32	90	080	31.8	24.8	21.6	19.9	18.7	17.8	16.7	15.1	13.2	
	120	080	31.8	27.4	23.9	22.0	20.7	19.8	18.6	17.0	15.1	
	150	080	31.8	29.3	25.5	23.5	22.1	21.2	19.9	18.3	16.4	
	180	080	80.0	65.8	54.2	44.3	38.3	34.3	29.6	24.1	20.7	
	210	080	80.0	66.8	56.3	46.0	39.8	35.6	30.8	25.1	21.6	
	240	080	80.0	67.1	58.1	47.4	41.1	36.7	31.8	25.9	22.4	
	270	080	80.0	67.3	59.7	48.7	42.2	37.7	32.7	26.6	23.0	
	300	080	80.0	67.5	61.1	49.9	43.2	38.6	33.4	27.3	23.6	
	330	080	80.0	67.6	62.4	50.9	44.1	39.4	34.1	27.9	24.1	

Roller gear cam drive (aluminum housing)

Output torque table

● RGIS straight shaft (3 dwell)

Cam curve/MS

Index number	Total index angle (deg)	Size	Static rated output torque (N·m)	Rated dynamic output torque (N·m)								
				Input shaft rotational speed (rpm)								
				10	20	30	40	50	70	100	140	200
24	150	040	10.9	8.73	7.60	7.00	6.61	6.32	5.85	4.89	4.12	3.42
		050	19.9	16.1	14.0	12.9	12.2	11.6	10.9	10.1	8.9	7.3
		063	85.1	57.9	47.7	39.0	33.7	30.2	25.5	21.2	17.8	14.6
		080	164	132	115	100	87	78	66	55	46	38
	180	040	30.6	21.4	17.7	14.4	12.5	11.2	9.4	7.9	6.7	5.5
		050	50.1	37.1	30.6	25.0	21.6	19.4	16.4	13.7	11.5	9.6
		063	85.1	62.5	51.5	42.1	36.4	32.6	27.5	23.0	19.3	15.9
		080	242	186	154	125	109	97	82	68	58	48
	210	040	30.6	22.7	18.7	15.3	13.2	11.8	10.0	8.4	7.1	5.9
		050	50.1	39.3	32.4	26.4	22.9	20.5	17.3	14.5	12.2	10.1
		063	85.1	66.2	54.5	44.5	38.6	34.5	29.1	24.3	20.5	17.0
		080	242	197	163	133	115	103	87	73	61	51
	240	040	30.6	23.2	19.5	16.0	13.8	12.4	10.4	8.7	7.4	6.2
		050	50.1	40.2	33.8	27.6	23.9	21.4	18.1	15.1	12.8	10.6
		063	85.1	67.8	57.0	46.5	40.3	36.0	30.5	25.4	21.5	17.8
		080	262	246	216	177	153	137	116	97	81	68
	270	040	30.6	23.5	20.3	16.5	14.3	12.8	10.8	9.1	7.6	6.4
		050	50.1	40.7	35.1	28.6	24.8	22.2	18.7	15.7	13.2	11.0
		063	85.1	68.6	59.1	48.3	41.8	37.4	31.6	26.4	22.3	18.5
		080	262	249	224	183	159	142	120	100	85	70
	300	040	30.6	23.7	20.9	17.0	14.8	13.2	11.2	9.3	7.9	6.6
		050	50.1	41.1	36.1	29.5	25.5	22.8	19.3	16.1	13.6	11.4
		063	85.1	69.2	60.9	49.7	43.1	38.5	32.5	27.2	23.0	19.1
		080	262	252	231	189	163	146	123	103	87	73
	330	040	30.6	23.9	21.4	17.5	15.1	13.5	11.4	9.6	8.1	6.8
		050	50.1	41.3	37.1	30.3	26.2	23.4	19.8	16.6	14.0	11.7
		063	85.1	69.7	62.5	51.0	44.2	39.5	33.4	27.9	23.6	19.7
		080	262	253	237	194	168	150	127	106	89	75
30	120	040	10.9	8.53	7.43	6.85	6.47	6.18	5.72	4.78	4.02	3.30
		050	22.8	17.9	15.6	14.3	13.5	12.6	10.6	8.8	7.4	6.1
		063	63.6	42.6	35.1	28.6	24.8	22.2	18.7	15.5	12.9	10.4
		080	152	82.2	67.7	55.3	47.8	42.7	36.0	29.9	24.9	19.9
	150	040	10.9	9.36	8.15	7.51	7.09	6.78	6.28	5.25	4.42	3.68
		050	37.9	26.4	21.8	17.8	15.4	13.8	11.6	9.7	8.2	6.8
		063	85.1	62.1	51.2	41.8	36.2	32.4	27.3	22.8	19.1	15.8
		080	152	90.1	74.3	60.6	52.5	46.9	39.6	33.0	27.6	22.5
	180	040	10.9	9.99	8.69	8.02	7.57	7.24	6.70	5.60	4.72	3.94
		050	37.9	28.2	23.2	19.0	16.4	14.7	12.4	10.4	8.7	7.3
		063	85.1	66.3	54.6	44.6	38.6	34.5	29.2	24.3	20.5	17.0
		080	152	96.1	79.2	64.7	56.0	50.1	42.3	35.3	29.6	24.4
	210	040	10.9	10.3	9.1	8.4	7.9	7.6	7.0	5.9	5.0	4.1
		050	37.9	29.1	24.4	19.9	17.2	15.4	13.0	10.9	9.2	7.6
		063	85.1	68.4	57.3	46.8	40.5	36.2	30.6	25.6	21.6	17.9
		080	164	156	138	121	105	93	79	66	56	46
	240	040	10.9	10.4	9.5	8.7	8.3	7.9	7.3	6.1	5.2	4.3
		050	37.9	29.4	25.3	20.7	17.9	16.0	13.5	11.3	9.5	8.0
		063	85.1	69.2	59.6	48.6	42.1	37.7	31.8	26.6	22.4	18.7
		080	164	158	143	125	109	97	82	69	58	48
	270	040	10.9	10.5	9.8	9.0	8.5	8.2	7.5	6.3	5.3	4.5
		050	37.9	29.7	26.1	21.3	18.5	16.5	14.0	11.7	9.9	8.2
		063	85.1	69.8	61.5	50.2	43.5	38.9	32.9	27.5	23.2	19.3
		080	164	159	148	130	112	100	85	71	60	50
	300	040	10.9	10.6	10.1	9.3	8.8	8.4	7.8	6.5	5.5	4.6
		050	37.9	29.8	26.8	21.9	19.0	17.0	14.3	12.0	10.1	8.5

● RGIS straight shaft (3 dwell)

Cam curve/MS

Index number	Total index angle (deg)	Size	Static rated output torque (N·m)	Rated dynamic output torque (N·m)								
				Input shaft rotational speed (rpm)								
				10	20	30	40	50	70	100	140	200
30	300	063	85.1	70.2	63.2	51.6	44.7	39.9	33.8	28.2	23.8	19.9
		080	164	160	152	133	115	103	87	73	61	51
	330	040	10.9	10.6	10.3	9.5	9.0	8.6	7.9	6.6	5.6	4.7
		050	37.9	30.0	27.5	22.4	19.4	17.4	14.7	12.3	10.4	8.7
		063	85.1	70.5	64.7	52.8	45.7	40.9	34.6	28.9	24.4	20.4
		080	164	161	156	136	118	106	89	75	63	53
36	90	040	7.19	5.36	4.41	3.60	3.12	2.79	2.35	1.96	1.63	1.32
		050	13.1	8.87	7.31	5.96	5.16	4.61	3.88	3.21	2.64	2.06
		063	16.4	12.3	10.7	9.9	9.3	8.9	8.2	6.7	5.4	4.1
		080	80.0	50.3	41.5	33.8	29.3	26.1	21.9	18.0	14.7	11.1
	120	040	10.2	8.21	6.77	5.52	4.78	4.28	3.61	3.02	2.54	2.10
		050	12.8	10.9	9.5	8.7	8.2	7.9	7.3	6.1	5.1	4.2
		063	25.3	21.1	18.3	16.9	15.9	15.2	14.2	13.2	11.5	9.3
		080	108	76.4	62.9	51.4	44.5	39.7	33.5	27.8	23.2	18.7
	150	040	10.2	8.85	7.29	5.95	5.16	4.61	3.89	3.25	2.74	2.28
		050	12.8	11.7	10.2	9.4	8.9	8.5	7.8	6.5	5.5	4.5
		063	63.6	48.9	40.3	32.9	28.5	25.5	21.5	17.9	15.1	12.4
		080	108	82.7	68.2	55.7	48.2	43.1	36.4	30.3	25.4	20.8
	180	040	10.2	9.30	7.69	6.28	5.44	4.86	4.11	3.44	2.90	2.41
		050	12.8	12.3	10.7	9.9	9.3	8.9	8.3	6.9	5.8	4.8
		063	63.6	51.6	42.7	34.8	30.2	27.0	22.8	19.0	16.0	13.2
		080	108	87.3	72.2	58.9	51.0	45.6	38.5	32.2	27.0	22.3
	210	040	10.2	9.40	8.02	6.55	5.67	5.07	4.28	3.58	3.02	2.52
		050	12.8	12.4	11.2	10.3	9.7	9.3	8.6	7.2	6.1	5.1
		063	63.6	52.2	44.6	36.4	31.5	28.2	23.8	19.9	16.8	13.9
		080	152	101	86	70	61	54	46	38	32	27
	240	040	10.2	9.47	8.29	6.77	5.86	5.24	4.43	3.71	3.13	2.61
		050	12.8	12.5	11.6	10.7	10.1	9.6	8.9	7.5	6.3	5.2
		063	63.6	52.7	46.2	37.7	32.6	29.2	24.7	20.6	17.4	14.5
		080	152	102	89	73	63	56	48	40	34	28
	270	040	10.2	9.51	8.53	6.97	6.03	5.40	4.56	3.81	3.22	2.69
		050	12.8	12.6	11.9	11.0	10.4	9.9	9.2	7.7	6.5	5.4
		063	63.6	53.0	47.5	38.8	33.6	30.1	25.4	21.2	17.9	14.9
		080	152	102	92	75	65	58	49	41	35	29
	300	040	10.2	9.55	8.75	7.14	6.18	5.53	4.67	3.91	3.30	2.76
		050	12.8	12.6	12.2	11.2	10.6	10.2	9.4	7.9	6.6	5.5
		063	63.6	53.2	48.7	39.8	34.5	30.8	26.0	21.8	18.4	15.3
		080	152	103	94	77	67	60	50	42	35	30
	330	040	10.2	9.57	8.94	7.30	6.32	5.65	4.78	4.00	3.38	2.82
		050	12.8	12.6	12.5	11.5	10.8	10.4	9.6	8.0	6.8	5.7
		063	63.6	53.4	49.8	40.7	35.2	31.5	26.6	22.3	18.8	15.7
		080	152	103	96	79	68	61	51	43	36	30
48	90	080	31.8	25.8	22.5	20.7	19.5	18.6	17.3	15.9	13.7	10.6
	120	080	31.8	28.5	24.8	22.9	21.6	20.6	19.2	17.8	15.5	12.5
	150	080	31.8	30.5	26.5	24.4	23.1	22.1	20.6	19.1	16.7	13.7
	180	080	80.0	66.3	56.5	46.1	39.9	35.7	30.1	25.1	21.1	17.4
	210	080	80.0	66.8	58.6	47.9	41.5	37.1	31.3	26.2	22.0	18.2
	240	080	80.0	67.1	60.5	49.4	42.8	38.3	32.3	27.0	22.8	18.9
	270	080	80.0	67.3	62.2	50.7	43.9	39.3	33.2	27.8	23.4	19.5
	300	080	80.0	67.5	63.6	51.9	45.0	40.2	34.0	28.4	24.0	20.0
	330	080	80.0	67.6	64.0	53.0	45.9	41.1	34.7	29.0	24.5	20.4

Roller gear cam drive (aluminum housing)

Output torque table

Index series

● RGIS straight shaft (4 dwell)

Cam curve/MS

Index number	Total index angle (deg)	Size	Static rated output torque (N·m)	Rated dynamic output torque (N·m)								
				Input shaft rotational speed (rpm)								
				10	15	20	30	40	50	75	100	150
32	180	040	10.9	9.16	8.44	7.97	7.35	6.94	6.63	5.44	4.70	3.83
		050	50.1	36.1	31.5	27.3	22.3	19.3	17.2	14.1	12.2	9.9
		063	85.1	60.8	53.0	45.9	37.5	32.5	29.0	23.7	20.4	16.5
		080	164	138	128	118	97	84	75	61	53	43
	210	040	30.6	22.0	19.2	16.7	13.6	11.8	10.5	8.6	7.4	6.1
		050	50.1	38.2	33.3	28.9	23.6	20.4	18.2	14.9	12.9	10.5
		063	85.1	64.3	56.1	48.6	39.7	34.4	30.7	25.1	21.7	17.6
		080	242	192	167	145	118	103	92	75	65	52
	240	040	30.6	23.0	20.1	17.4	14.2	12.3	11.0	9.0	7.8	6.3
		050	50.1	39.9	34.8	30.2	24.6	21.3	19.1	15.6	13.5	11.0
		063	85.1	67.2	58.7	50.8	41.5	35.9	32.1	26.2	22.7	18.4
		080	262	244	223	193	157	136	122	99	86	70
	270	040	30.6	23.5	20.8	18.1	14.7	12.8	11.4	9.3	8.1	6.6
		050	50.1	40.7	36.1	31.2	25.5	22.1	19.8	16.1	14.0	11.4
		063	85.1	68.6	60.8	52.7	43.0	37.2	33.3	27.2	23.5	19.1
		080	262	249	231	200	163	141	126	103	89	73
	300	040	30.6	23.7	21.5	18.6	15.2	13.2	11.8	9.6	8.3	6.8
		050	50.1	41.1	37.2	32.2	26.3	22.8	20.4	16.6	14.4	11.7
		063	85.1	69.2	62.7	54.3	44.3	38.4	34.3	28.0	24.2	19.7
		080	262	252	238	206	168	146	130	106	92	75
	330	040	30.6	23.9	22.0	19.1	15.6	13.5	12.1	9.9	8.5	7.0
		050	50.1	41.3	38.1	33.0	27.0	23.4	20.9	17.0	14.8	12.0
		063	85.1	69.7	64.3	55.7	45.5	39.4	35.2	28.7	24.9	20.3
		080	262	253	244	211	173	149	134	109	94	77
36	150	040	10.9	8.82	8.13	7.68	7.08	6.68	6.39	5.24	4.53	3.68
		050	37.9	24.9	21.8	18.8	15.4	13.3	11.9	9.7	8.4	6.8
		063	63.6	44.0	38.4	33.3	27.1	23.5	21.0	17.1	14.7	11.8
		080	152	84.9	74.1	64.2	52.4	45.3	40.5	33.0	28.4	22.7
	180	040	30.6	21.5	18.8	16.3	13.3	11.5	10.3	8.4	7.3	5.9
		050	51.5	37.3	32.5	28.2	23.0	19.9	17.8	14.5	12.6	10.2
		063	85.1	62.7	54.8	47.4	38.7	33.5	30.0	24.4	21.1	17.1
		080	164	143	132	122	100	86	77	63	54	44
	210	040	30.6	22.6	19.8	17.1	14.0	12.1	10.8	8.8	7.6	6.2
		050	51.5	39.2	34.2	29.7	24.2	21.0	18.7	15.3	13.2	10.8
		063	85.1	66.1	57.7	50.0	40.8	35.3	31.6	25.8	22.3	18.1
		080	164	151	139	129	105	91	81	66	57	47
	240	040	30.6	23.5	20.6	17.8	14.6	12.6	11.3	9.2	8.0	6.5
		050	51.5	40.7	35.7	30.9	25.2	21.8	19.5	15.9	13.8	11.2
		063	85.1	68.6	60.1	52.1	42.5	36.8	32.9	26.8	23.2	18.9
		080	164	156	145	134	110	95	85	69	60	49
	270	040	30.6	23.7	21.3	18.5	15.1	13.0	11.7	9.5	8.2	6.7
		050	51.5	41.1	36.9	31.9	26.1	22.6	20.2	16.5	14.3	11.6
		063	85.1	69.3	62.2	53.8	44.0	38.1	34.0	27.8	24.0	19.5
		080	164	158	150	139	113	98	88	72	62	50
	300	040	30.6	23.9	21.9	19.0	15.5	13.4	12.0	9.8	8.5	6.9
		050	51.5	41.4	37.9	32.8	26.8	23.2	20.8	16.9	14.7	12.0
		063	85.1	69.8	64.0	55.4	45.2	39.2	35.0	28.6	24.7	20.1
		080	164	159	154	143	117	101	90	74	64	52
	330	040	30.6	24.1	22.5	19.5	15.9	13.8	12.3	10.0	8.7	7.1
		050	51.5	41.6	38.8	33.6	27.5	23.8	21.3	17.4	15.0	12.3
		063	85.1	70.2	65.5	56.8	46.3	40.1	35.9	29.3	25.4	20.7
		080	164	160	158	146	120	104	93	76	65	53

● RGIS straight shaft (4 dwell)

Cam curve/MS

Index number	Total index angle (deg)	Size	Static rated output torque (N·m)	Rated dynamic output torque (N·m)								
				Input shaft rotational speed (rpm)								
				10	15	20	30	40	50	75	100	150
40	150	040	10.9	9.10	8.39	7.92	7.30	6.89	6.59	5.40	4.67	3.80
		050	37.9	25.7	22.4	19.4	15.9	13.7	12.3	10.0	8.6	7.0
		063	63.6	45.4	39.6	34.3	28.0	24.2	21.7	17.6	15.2	12.2
		080	152	87.6	76.4	66.2	54.0	46.8	41.8	34.0	29.3	23.5
	180	040	10.9	9.70	8.95	8.45	7.79	7.35	7.03	5.76	4.99	4.06
		050	37.9	27.4	23.9	20.7	16.9	14.6	13.1	10.7	9.2	7.5
		063	85.1	64.4	56.2	48.7	39.7	34.4	30.8	25.1	21.7	17.5
		080	164	147	135	126	102	89	79	65	56	45
	210	040	10.9	10.2	9.4	8.9	8.2	7.7	7.4	6.1	5.2	4.3
		050	37.9	28.7	25.1	21.7	17.7	15.4	13.7	11.2	9.7	7.9
		063	85.1	67.6	59.0	51.1	41.7	36.1	32.3	26.3	22.8	18.5
		080	164	154	142	132	108	93	83	68	59	48
	240	040	10.9	10.4	9.8	9.2	8.5	8.0	7.7	6.3	5.4	4.4
		050	37.9	29.4	26.1	22.6	18.4	16.0	14.3	11.6	10.1	8.2
		063	85.1	69.2	61.3	53.1	43.3	37.5	33.6	27.4	23.7	19.3
		080	164	158	148	137	112	97	87	71	61	50
	270	040	10.9	10.5	10.1	9.5	8.8	8.3	7.9	6.5	5.6	4.6
		050	37.9	29.7	26.9	23.3	19.0	16.5	14.7	12.0	10.4	8.5
		063	85.1	69.8	63.3	54.8	44.7	38.7	34.6	28.3	24.5	19.9
		080	164	159	152	141	115	100	89	73	63	51
	300	040	10.9	10.6	10.4	9.8	9.0	8.5	8.1	6.7	5.8	4.7
		050	37.9	29.8	27.6	23.9	19.5	16.9	15.1	12.3	10.7	8.7
		063	85.1	70.2	65.0	56.3	46.0	39.8	35.6	29.1	25.1	20.5
		080	164	160	157	145	119	103	92	75	65	53
	330	040	10.9	10.6	10.6	10.0	9.2	8.7	8.3	6.8	5.9	4.8
		050	37.9	30.0	28.3	24.5	20.0	17.3	15.5	12.6	10.9	8.9
		063	85.1	70.5	66.6	57.6	47.1	40.8	36.5	29.8	25.8	21.0
		080	164	161	160	149	121	105	94	77	66	54
48	120	040	10.2	7.98	6.96	6.03	4.92	4.26	3.81	3.11	2.68	2.17
		050	12.8	10.6	9.7	9.2	8.5	8.0	7.6	6.3	5.4	4.3
		063	25.3	20.5	18.9	17.8	16.4	15.5	14.8	13.6	12.2	9.7
		080	80.0	55.4	48.3	41.9	34.1	29.5	26.4	21.4	18.3	14.4
	150	040	10.2	8.60	7.50	6.50	5.31	4.59	4.11	3.35	2.90	2.35
		050	12.8	11.4	10.5	9.9	9.1	8.6	8.2	6.7	5.8	4.7
		063	63.6	47.5	41.5	35.9	29.3	25.4	22.7	18.5	15.9	12.8
		080	108	80.4	70.2	60.8	49.6	42.9	38.4	31.2	26.9	21.6
	180	040	10.2	9.07	7.92	6.86	5.60	4.85	4.34	3.54	3.06	2.49
		050	12.8	12.0	11.1	10.4	9.6	9.1	8.7	7.1	6.2	5.0
		063	63.6	50.3	43.9	38.0	31.0	26.9	24.0	19.6	16.9	13.7
		080	108	85.1	74.3	64.3	52.5	45.5	40.7	33.1	28.6	23.1
	210	040	10.2	9.40	8.25	7.15	5.84	5.05	4.52	3.69	3.19	2.60
		050	12.8	12.4	11.5	10.9	10.0	9.5	9.0	7.4	6.4	5.2
		063	63.6	52.2	45.9	39.7	32.4	28.1	25.1	20.5	17.7	14.4
		080	152	101	89	77	63	54	48	40	34	28
	240	040	10.2	9.47	8.54	7.39	6.04	5.23	4.67	3.82	3.30	2.69
		050	12.8	12.5	11.9	11.2	10.4	9.8	9.4	7.7	6.6	5.4
		063	63.6	52.7	47.5	41.1	33.6	29.1	26.0	21.2	18.3	14.9
		080	152	102	92	79	65	56	50	41	35	29
	270	040	10.2	9.51	8.78	7.61	6.21	5.38	4.81	3.93	3.40	2.77
		050	12.8	12.6	12.2	11.6	10.7	10.1	9.6	7.9	6.8	5.6
		063	63.6	53.0	48.9	42.4	34.6	29.9	26.8	21.9	18.9	15.4
		080	152	102	94	82	67	58	52	42	36	30
	300	040	10.2	9.55	9.00	7.79	6.36	5.51	4.93	4.02	3.48	2.84
		050	12.8	12.6	12.6	11.9	10.9	10.3	9.9	8.1	7.0	5.7

Output torque table

● RGIS straight shaft (4 dwell)

Cam curve/MS

Index number	Total index angle (deg)	Size	Static rated output torque (N·m)	Rated dynamic output torque (N·m)								
				Input shaft rotational speed (rpm)								
				10	15	20	30	40	50	75	100	150
48	300	063	63.6	53.2	50.2	43.4	35.5	30.7	27.5	22.4	19.4	15.8
		080	152	103	97	84	69	59	53	43	37	30
	330	040	10.2	9.57	9.06	7.97	6.50	5.63	5.04	4.11	3.56	2.90
		050	12.8	12.6	12.6	12.1	11.2	10.5	10.1	8.3	7.2	5.8
		063	63.6	53.4	50.5	44.4	36.3	31.4	28.1	22.9	19.8	16.2
		080	152	103	98	86	70	61	54	44	38	31

Product specifications
Compact
Standard
Table
Wide angle
Basic
Roller gear cam drive
Parallel cam drive
Circular
Linear
Pick and Place drive
Option

Roller gear cam drive (aluminum housing)

Output torque table

● RGIS flange shaft (1 dwell)

Cam curve/MS

Index number	Total index angle (deg)	Size	Static rated output torque (N·m)	Rated dynamic output torque (N·m)								
				Input shaft rotational speed (rpm)								
				30	60	90	120	150	200	300	400	600
2	270	040	10.9	5.41	4.70	4.32	4.07	3.87	3.60	2.81		
		050	19.9	10.0	8.7	8.0	7.6	7.2	6.7			
		063	85.1	36.0	29.6	24.2	20.9	18.6				
		080	164	81.8	71.2	62.2	53.7	47.8				
	300	040	30.6	13.4	11.0	9.0	7.8	6.9	6.0	4.7		
		050	50.1	23.4	19.3	15.7	13.6	12.1	10.4			
		063	85.1	39.2	32.3	26.3	22.7	20.3	17.4			
		080	242	117	96	78	68	60				
	330	040	30.6	14.4	11.9	9.7	8.4	7.5	6.4	5.1		
		050	50.1	25.1	20.7	16.9	14.6	13.0	11.2	9.0		
		063	119	48.0	39.5	32.2	27.9	24.9	21.4			
		080	242	125	103	84	73	65				
3	180	040	10.9	5.19	4.51	4.14	3.88	3.68	3.40	2.57		
		050	19.9	9.64	8.38	7.70	7.23	6.87	6.38			
		063	85.1	34.6	28.4	23.2	20.0	17.7				
		080	164	78.5	68.3	59.6	51.4	45.7				
	210	040	10.9	5.87	5.10	4.69	4.41	4.19	3.90	3.04		
		050	50.1	23.3	19.2	15.7	13.5	12.1	10.4			
		063	85.1	39.0	32.1	26.2	22.6	20.1	17.2			
		080	242	116	96	78	67	60				
	240	040	30.6	14.7	12.1	9.9	8.5	7.6	6.5	5.2	4.3	
		050	50.1	25.6	21.1	17.2	14.9	13.3	11.4	9.2		
		063	85.1	42.9	35.4	28.8	24.9	22.2	19.1			
		080	242	128	105	86	74	66	57			
	270	040	41.6	22.1	18.2	14.9	12.9	11.5	9.9	8.0	6.8	
		050	50.1	27.7	22.8	18.6	16.1	14.4	12.4	10.0		
		063	85.1	46.4	38.2	31.2	27.0	24.1	20.7			
		080	242	138	114	93	80	72	62			
	300	040	41.6	23.6	19.4	15.9	13.7	12.3	10.6	8.6	7.3	
		050	67.0	39.2	32.3	26.3	22.8	20.4	17.6	14.2		
		063	119	56.4	46.5	37.9	32.8	29.3	25.3			
		080	262	179	154	126	109	97	84			
	330	040	41.6	24.9	20.5	16.7	14.5	12.9	11.2	9.1	7.8	
		050	67.0	41.2	34.0	27.7	24.0	21.5	18.6	15.0		
		063	129	93.3	81.2	71.1	61.5	55.0	47.5			
		080	262	189	163	133	115	103	89			
4	150	040	10.2	5.17	4.25	3.45	2.96	2.61	2.17	1.54		
		050	12.8	6.91	6.00	5.51	5.16	4.88	4.50			
		063	63.6	27.5	22.6	18.4	15.8	14.0	11.8			
		080	108	46.3	38.1	30.9	26.5	23.4				
	180	040	10.9	6.28	5.46	5.02	4.72	4.49	4.18	3.26	2.58	
		050	19.9	11.6	10.1	9.3	8.7	8.3	7.8	6.9		
		063	63.6	31.4	25.8	21.0	18.1	16.1	13.8			
		080	152	60.4	49.7	40.5	34.9	31.0	26.3			
	210	040	17.9	11.5	10.1	9.3	8.7	8.2	7.0	5.6	4.7	
		050	19.9	12.8	11.2	10.3	9.7	9.2	8.6	7.8		
		063	63.6	34.7	28.5	23.3	20.1	17.9	15.4			
		080	164	105	91	80	69	61	53			
	240	040	17.9	12.4	10.8	10.0	9.5	8.8	7.6	6.1	5.2	
		050	19.9	13.8	12.0	11.1	10.5	10.0	9.4	8.5		
		063	63.6	37.4	30.8	25.1	21.7	19.4	16.7			
		080	164	113	99	86	75	67	57			
	270	040	17.9	13.2	11.5	10.6	10.0	9.4	8.1	6.6	5.6	
		050	19.9	14.7	12.8	11.8	11.1	10.6	10.0	9.1		

● RGIS flange shaft (1 dwell)

Cam curve/MS

Index number	Total index angle (deg)	Size	Static rated output torque (N·m)	Rated dynamic output torque (N·m)								
				Input shaft rotational speed (rpm)								
				30	60	90	120	150	200	300	400	600
4	270	063	63.6	39.8	32.8	26.7	23.1	20.6	17.8			
		080	164	120	105	92	79	71	61			
	300	040	30.6	19.0	15.7	12.8	11.1	9.9	8.6	6.9	5.9	
		050	50.1	33.1	27.3	22.2	19.3	17.2	14.9	12.0		
		063	85.1	55.6	45.8	37.4	32.4	28.9	25.0			
		080	164	127	110	96	83	75	64			
	330	040	30.6	19.9	16.4	13.4	11.6	10.3	8.9	7.2	6.2	
		050	50.1	34.5	28.4	23.2	20.1	17.9	15.5	12.6		
		063	85.1	58.0	47.8	39.0	33.7	30.2	26.1			
		080	164	132	115	101	87	78	67			
5	120	040	7.19	3.73	3.06	2.47	2.10	1.83	1.48	0.91		
		050	13.1	6.31	5.18	4.20	3.58	3.13	2.57	1.69		
		063	16.4	8.50	7.35	6.70	6.22	5.80	5.17			
		080	80.0	34.1	28.0	22.7	19.3	16.9				
	150	040	7.19	4.33	3.56	2.89	2.48	2.18	1.82	1.30	0.85	
		050	12.8	7.83	6.81	6.25	5.87	5.58	5.18	3.98		
		063	25.3	14.7	12.8	11.7	11.0	10.4	9.6			
		080	108	53.3	43.8	35.6	30.7	27.2	23.0			
	180	040	10.2	6.53	5.37	4.38	3.77	3.35	2.86	2.20	1.71	
		050	12.8	8.68	7.55	6.94	6.53	6.22	5.81	4.58		
		063	25.3	16.5	14.3	13.2	12.4	11.8	11.0			
		080	108	59.6	49.1	40.0	34.5	30.7	26.2			
	210	040	14.8	7.05	5.81	4.73	4.08	3.64	3.12	2.45	1.98	
		050	12.8	9.3	8.1	7.5	7.0	6.7	6.3	5.0		
		063	63.6	38.4	31.6	25.8	22.3	19.9	17.1			
		080	152	74.0	60.9	49.7	42.9	38.2	32.8			
	240	040	10.9	8.19	7.13	6.57	6.19	5.91	5.55	4.48	3.77	
		050	37.9	23.2	19.1	15.6	13.5	12.0	10.4	8.4		
		063	63.6	40.9	33.7	27.5	23.8	21.2	18.3			
		080	152	78.9	65.0	53.0	45.8	40.9	35.2			
	270	040	10.9	8.62	7.50	6.91	6.52	6.23	5.86	4.75	4.02	
		050	37.9	24.4	20.1	16.4	14.2	12.7	10.9	8.8		
		063	63.6	43.0	35.4	28.9	25.0	22.3	19.3			
		080	152	83.0	68.4	55.8	48.3	43.1	37.1			
	300	040	10.9	8.99	7.82	7.21	6.80	6.50	6.12	4.97	4.23	
		050	37.9	25.4	20.9	17.1	14.8	13.2	11.4	9.2		
		063	63.6	44.8	37.0	30.2	26.1	23.3	20.1			
		080	152	86.5	71.3	58.2	50.3	45.0	38.8			
	330	040	10.9	9.31	8.10	7.47	7.04	6.73	6.34	5.16	4.41	
		050	37.9	26.3	21.7	17.7	15.3	13.7	11.8	9.6		
		063	63.6	46.4	38.3	31.2	27.0	24.1	20.9			
		080	152	89.6	73.8	60.3	52.1	46.6	40.2			
6	90	040	10.9	4.84	4.19	3.83	3.56	3.34	3.01	2.03		
		050	19.9	8.99	7.80	7.13	6.66	6.27	5.71			
		063	85.1	32.2	26.5	21.5	18.4	16.2				
		080	164	73.3	63.6	55.3	47.5	41.8				
	120	040	41.6	19.1	15.7	12.8	11.1	9.9	8.5	6.6	5.4	
		050	67.0	31.8	26.2	21.4	18.4	16.4	14.1	11.1		
		063	119	45.7	37.6	30.6	26.4	23.5	20.0			
		080	262	145	125	102	88	78	67			
	150	040	41.6	22.0	18.1	14.8	12.8	11.4	9.8	7.9	6.6	
		050	67.0	36.5	30.1	24.6	21.2	18.9	16.3	13.1		
		063	129	82.6	71.9	62.9	54.4	48.5	41.8			
		080	262	167	144	117	101	91	78			

Roller gear cam drive (aluminum housing)

Output torque table

● RGIS flange shaft (1 dwell)

Cam curve/MS

Index number	Total index angle (deg)	Size	Static rated output torque (N·m)	Rated dynamic output torque (N·m)								
				Input shaft rotational speed (rpm)								
				30	60	90	120	150	200	300	400	600
6	180	040	41.6	24.3	20.0	16.3	14.1	12.6	10.9	8.8	7.4	
		050	67.0	40.2	33.1	27.0	23.4	20.9	18.0	14.6		
		063	129	91.0	79.2	69.3	60.0	53.6	46.2			
		080	431	224	185	151	131	117	101			
	210	040	41.6	26.1	21.5	17.5	15.2	13.6	11.7	9.5	8.1	
		050	67.0	43.2	35.6	29.0	25.1	22.4	19.4	15.7		
		063	129	97.8	85.1	74.5	64.4	57.6	49.8			
		080	431	241	199	162	140	125	108			
	240	040	41.6	27.6	22.7	18.5	16.0	14.3	12.4	10.1	8.6	
		050	67.0	45.6	37.6	30.7	26.5	23.7	20.5	16.6		
		063	129	103	90	79	68	61	53			
		080	431	255	210	171	148	133	115			
	270	040	41.6	28.8	23.7	19.4	16.8	15.0	13.0	10.5	9.1	
		050	67.0	47.6	39.2	32.0	27.7	24.8	21.4	17.4		
		063	129	108	94	82	71	64	55			
		080	431	266	219	179	155	139	120			
	300	040	41.6	29.9	24.6	20.1	17.4	15.6	13.5	10.9	9.4	
		050	67.0	49.3	40.6	33.2	28.7	25.7	22.2	18.1		
		063	129	112	97	85	74	66	57			
		080	431	276	228	186	161	144	124			
	330	040	41.6	30.8	25.4	20.7	17.9	16.0	13.9	11.3	9.7	
		050	67.0	50.8	41.9	34.2	29.6	26.5	22.9	18.7		
		063	129	115	100	88	76	68	59			
		080	431	285	235	192	166	148	128			
8	90	040	10.9	5.85	5.08	4.66	4.36	4.11	3.77	2.76	1.91	
		050	50.1	23.2	19.1	15.6	13.4	11.9	10.1	7.8		
		063	85.1	38.9	32.0	26.0	22.4	19.8	16.8			
		080	164	88.5	76.9	67.1	57.7	51.2	43.3			
	120	040	30.6	15.9	13.1	10.7	9.2	8.2	7.0	5.6	4.5	
		050	50.1	27.7	22.8	18.6	16.0	14.3	12.3	9.7		
		063	85.1	46.4	38.2	31.2	26.9	24.0	20.5			
		080	242	138	114	93	80	71	61			
	150	040	30.6	17.8	14.6	11.9	10.3	9.2	7.9	6.4	5.3	
		050	50.1	30.9	25.4	20.7	17.9	16.0	13.8	11.1		
		063	85.1	51.9	42.8	34.9	30.1	26.9	23.1			
		080	242	155	127	104	90	80	69			
	180	040	30.6	19.2	15.8	12.9	11.2	10.0	8.6	6.9	5.9	
		050	50.1	33.3	27.4	22.4	19.4	17.3	14.9	12.1		
		063	85.1	56.0	46.2	37.7	32.6	29.1	25.1			
		080	242	167	138	112	97	87	75			
	210	040	30.6	20.3	16.7	13.7	11.8	10.6	9.1	7.4	6.3	
		050	50.1	35.2	29.0	23.7	20.5	18.3	15.8	12.8		
		063	85.1	59.3	48.9	39.9	34.5	30.8	26.6			
		080	242	177	146	119	103	92	79			
	240	040	30.6	21.2	17.5	14.3	12.4	11.1	9.6	7.8	6.6	
		050	50.1	36.8	30.3	24.7	21.4	19.1	16.6	13.4		
		063	85.1	62.0	51.1	41.7	36.1	32.2	27.9			
		080	242	185	152	124	108	96	83			
	270	040	30.6	22.0	18.1	14.8	12.8	11.5	9.9	8.1	6.9	
		050	50.1	38.1	31.4	25.6	22.2	19.8	17.2	14.0		
		063	85.1	64.2	52.9	43.2	37.4	33.4	28.9			
		080	262	233	201	164	142	127	110			
	300	040	30.6	22.7	18.7	15.3	13.2	11.8	10.2	8.3	7.2	
		050	50.1	39.3	32.4	26.4	22.9	20.4	17.7	14.4		

● RGIS flange shaft (1 dwell)

Cam curve/MS

Index number	Total index angle (deg)	Size	Static rated output torque (N·m)	Rated dynamic output torque (N·m)								
				Input shaft rotational speed (rpm)								
				30	60	90	120	150	200	300	400	600
8	300	063	85.1	66.2	54.6	44.5	38.6	34.5	29.8			
		080	262	241	207	169	146	131	113			
	330	040	30.6	23.3	19.2	15.7	13.6	12.1	10.5	8.5	7.4	
		050	50.1	40.3	33.2	27.1	23.5	21.0	18.2	14.8		
		063	85.1	67.9	56.0	45.7	39.6	35.4	30.6			
		080	262	247	212	173	150	134	116			
9	90	040	10.9	6.25	5.43	4.98	4.67	4.42	4.07	3.04	2.20	
		050	37.9	17.8	14.6	11.9	10.2	9.1	7.7	5.9		
		063	63.6	31.2	25.7	20.9	18.0	15.9	13.4			
		080	152	60.2	49.5	40.2	34.5	30.4	25.5			
	120	040	10.9	7.35	6.39	5.88	5.53	5.26	4.91	3.86	3.10	
		050	37.9	20.8	17.1	14.0	12.1	10.8	9.2	7.3		
		063	63.6	36.7	30.2	24.6	21.2	18.9	16.2			
		080	152	70.7	58.2	47.4	40.9	36.3	31.0			
	150	040	10.9	8.13	7.07	6.51	6.13	5.85	5.49	4.39	3.65	
		050	37.9	23.0	18.9	15.4	13.4	11.9	10.3	8.2		
		063	85.1	54.0	44.5	36.3	31.4	28.0	24.1			
		080	164	123	107	94	81	72	62			
	180	040	10.9	8.72	7.59	6.99	6.59	6.29	5.91	4.78	4.03	
		050	51.5	34.3	28.3	23.1	20.0	17.9	15.4	12.5		
		063	85.1	57.9	47.7	38.9	33.7	30.1	25.9			
		080	164	132	115	100	87	78	67			
	210	040	30.6	20.9	17.2	14.0	12.2	10.9	9.4	7.6	6.5	
		050	51.5	36.2	29.8	24.3	21.1	18.8	16.3	13.2		
		063	85.1	60.9	50.2	41.0	35.5	31.7	27.4			
		080	164	139	121	106	92	82	71			
	240	040	30.6	21.8	17.9	14.6	12.7	11.3	9.8	8.0	6.8	
		050	51.5	37.7	31.0	25.3	21.9	19.6	17.0	13.8		
		063	85.1	63.5	52.3	42.7	37.0	33.0	28.6			
		080	164	145	126	110	95	85	74			
	270	040	30.6	22.5	18.5	15.1	13.1	11.7	10.1	8.2	7.1	
		050	51.5	38.9	32.1	26.2	22.7	20.3	17.5	14.3		
		063	85.1	65.7	54.1	44.2	38.2	34.2	29.6			
		080	164	150	130	114	99	88	76			
	300	040	30.6	23.2	19.1	15.6	13.5	12.1	10.4	8.5	7.3	
		050	51.5	40.0	33.0	26.9	23.3	20.9	18.1	14.7		
		063	85.1	67.5	55.7	45.4	39.3	35.2	30.4			
		080	164	154	134	117	102	91	79			
	330	040	30.6	23.7	19.6	16.0	13.8	12.4	10.7	8.7	7.5	
		050	51.5	41.0	33.8	27.6	23.9	21.4	18.5	15.1		
		063	85.1	69.2	57.1	46.6	40.3	36.1	31.2			
		080	164	158	137	120	104	93	81			
10	90	040	10.2	6.09	5.00	4.06	3.48	3.07	2.57	1.83	1.21	
		050	12.8	8.10	7.03	6.45	6.05	5.73	5.28	3.97		
		063	25.3	15.4	13.3	12.2	11.4	10.8	9.9			
		080	108	55.6	45.7	37.2	31.9	28.2	23.6			
	120	040	10.9	7.64	6.65	6.12	5.76	5.48	5.13	4.05	3.29	
		050	37.9	21.6	17.8	14.5	12.5	11.2	9.6	7.6		
		063	63.6	38.1	31.4	25.6	22.1	19.7	16.9			
		080	152	73.6	60.6	49.4	42.6	37.9	32.3			
	150	040	10.9	8.39	7.30	6.72	6.33	6.04	5.67	4.55	3.80	
		050	37.9	23.7	19.5	15.9	13.8	12.3	10.6	8.5		
		063	63.6	41.8	34.5	28.1	24.3	21.7	18.7			
		080	152	80.7	66.5	54.2	46.9	41.8	35.9			

Roller gear cam drive (aluminum housing)

Output torque table

● RGIS flange shaft (1 dwell)

Cam curve/MS

Index number	Total index angle (deg)	Size	Static rated output torque (N·m)	Rated dynamic output torque (N·m)								
				Input shaft rotational speed (rpm)								
				30	60	90	120	150	200	300	400	600
10	180	040	10.9	8.95	7.78	7.17	6.76	6.46	6.07	4.92	4.16	
		050	37.9	25.2	20.8	17.0	14.7	13.1	11.3	9.2		
		063	85.1	59.4	48.9	39.9	34.5	30.8	26.6			
		080	152	86.1	71.0	57.9	50.1	44.7	38.5			
	210	040	10.9	9.39	8.17	7.53	7.11	6.79	6.39	5.19	4.43	
		050	37.9	26.5	21.8	17.8	15.4	13.8	11.9	9.6		
		063	85.1	62.3	51.3	41.9	36.3	32.4	28.0			
		080	164	142	124	108	94	84	72			
	240	040	10.9	9.76	8.50	7.83	7.39	7.06	6.65	5.42	4.64	
		050	37.9	27.5	22.7	18.5	16.0	14.3	12.4	10.1		
		063	85.1	64.7	53.4	43.6	37.7	33.7	29.1			
		080	164	148	128	112	97	87	75			
	270	040	10.9	10.1	8.8	8.1	7.6	7.3	6.9	5.6	4.8	
		050	37.9	28.4	23.4	19.1	16.5	14.8	12.8	10.4		
		063	85.1	66.8	55.1	45.0	38.9	34.8	30.1			
		080	164	152	133	116	100	90	78			
	300	040	10.9	10.4	9.0	8.3	7.8	7.5	7.1	5.8	5.0	
		050	37.9	29.2	24.0	19.6	17.0	15.2	13.1	10.7		
		063	85.1	68.7	56.6	46.2	40.0	35.8	30.9			
		080	164	157	136	119	103	92	80			
	330	040	10.9	10.6	9.2	8.5	8.0	7.7	7.2	5.9	5.1	
		050	37.9	29.9	24.6	20.1	17.4	15.6	13.5	11.0		
		063	85.1	70.3	57.9	47.3	41.0	36.6	31.7			
		080	164	160	139	122	106	95	82			
12	90	040	7.19	4.80	3.94	3.20	2.74	2.42	2.01	1.42	0.92	
		050	12.8	8.68	7.54	6.93	6.51	6.17	5.73	4.39		
		063	25.3	16.6	14.4	13.2	12.4	11.8	10.9			
		080	108	60.2	49.6	40.3	34.7	30.7	25.9			
	120	040	7.19	5.38	4.43	3.61	3.11	2.76	2.34	1.79	1.37	
		050	12.8	9.74	8.47	7.80	7.34	6.99	6.54	5.19		
		063	25.3	18.9	16.4	15.1	14.2	13.5	12.6			
		080	108	68.4	56.3	45.9	39.6	35.3	30.2			
	150	040	10.2	7.93	6.53	5.32	4.60	4.10	3.52	2.80	2.31	
		050	12.8	10.5	9.1	8.4	7.9	7.6	7.1	5.7		
		063	25.3	20.4	17.8	16.4	15.4	14.7	13.8			
		080	108	74.1	61.1	49.8	43.0	38.4	33.0			
	180	040	10.2	8.36	6.89	5.62	4.86	4.34	3.74	3.00	2.51	
		050	12.8	11.1	9.6	8.9	8.4	8.0	7.5	6.1		
		063	25.3	21.6	18.8	17.3	16.4	15.6	14.7			
		080	108	78.5	64.7	52.8	45.6	40.7	35.1			
	210	040	10.2	8.72	7.18	5.86	5.07	4.53	3.91	3.15	2.67	
		050	12.8	11.5	10.0	9.2	8.7	8.3	7.8	6.4		
		063	25.3	22.6	19.7	18.1	17.1	16.3	15.4			
		080	108	82.0	67.5	55.1	47.7	42.6	36.8			
	240	040	10.2	9.02	7.43	6.06	5.25	4.69	4.05	3.27	2.79	
		050	12.8	11.9	10.4	9.6	9.0	8.6	8.1	6.6		
		063	25.3	23.4	20.4	18.8	17.7	16.9	15.9			
		080	108	84.9	70.0	57.1	49.4	44.2	38.2			
	270	040	10.9	10.4	9.0	8.3	7.8	7.5	7.0	5.7	4.9	
		050	19.9	19.0	16.5	15.3	14.4	13.8	13.0	10.7		
		063	25.3	24.1	21.0	19.3	18.3	17.4	16.4			
		080	108	87.5	72.1	58.8	50.9	45.5	39.3			
	300	040	10.9	10.6	9.2	8.5	8.0	7.7	7.2	5.9	5.1	
		050	19.9	19.5	17.0	15.6	14.8	14.1	13.3	11.0		

● RGIS flange shaft (1 dwell)

Cam curve/MS

Index number	Total index angle (deg)	Size	Static rated output torque (N·m)	Rated dynamic output torque (N·m)								
				Input shaft rotational speed (rpm)								
				30	60	90	120	150	200	300	400	600
12	300	063	63.6	53.0	43.7	35.7	30.9	27.6	23.9			
		080	152	102	84	69	60	53	46			
	330	040	10.9	10.7	9.4	8.7	8.2	7.8	7.4	6.0	5.2	
		050	19.9	19.6	17.4	16.0	15.1	14.4	13.6	11.2		
		063	63.6	53.4	44.7	36.5	31.6	28.2	24.4			
		080	152	103	86	70	61	54	47			
15	90	080	31.8	22.7	19.7	18.0	16.9	15.9	14.6			
	120	080	80.0	54.0	44.5	36.2	31.3	27.8	23.8			
	150	080	80.0	57.8	47.6	38.8	33.6	29.9	25.7			
	180	080	80.0	60.7	50.1	40.8	35.3	31.5	27.2			
	210	080	80.0	63.2	52.0	42.5	36.7	32.8	28.3			
	240	080	80.0	65.2	53.7	43.9	38.0	33.9	29.3			
	270	080	80.0	67.0	55.2	45.1	39.0	34.9	30.1			
	300	080	80.0	67.4	56.6	46.2	40.0	35.7	30.9			
	330	080	80.0	67.5	57.8	47.1	40.8	36.5	31.6			
16	90	080	31.8	23.1	20.1	18.4	17.2	16.3	14.9			
	120	080	31.8	25.6	22.2	20.4	19.2	18.2	17.0			
	150	080	31.8	27.3	23.7	21.8	20.6	19.6	18.3			
	180	080	80.0	61.4	50.6	41.3	35.7	31.9	27.5			
	210	080	80.0	63.7	52.5	42.9	37.1	33.1	28.6			
	240	080	80.0	65.8	54.2	44.2	38.3	34.2	29.6			
	270	080	80.0	67.3	55.7	45.4	39.3	35.2	30.4			
	300	080	80.0	67.5	57.0	46.5	40.3	36.0	31.1			
	330	080	80.0	67.6	58.2	47.5	41.1	36.8	31.8			

Output torque table

Index series

● RGIS flange shaft (2 dwell)

Cam curve/MS

Index number	Total index angle (deg)	Size	Static rated output torque (N·m)	Rated dynamic output torque (N·m)								
				Input shaft rotational speed (rpm)								
				15	30	45	60	75	100	150	200	300
16	120	040	16.1	11.1	9.6	8.9	8.3	8.0	7.5	6.1	5.1	3.8
		050	19.9	13.8	12.0	11.1	10.5	10.0	9.4	8.5	7.5	5.6
		063	63.6	37.4	30.8	25.1	21.7	19.4	16.7	13.3	11.1	
		080	152	72.2	59.4	48.5	41.9	37.3	32.0	25.4	20.9	
	150	040	30.6	19.0	15.7	12.8	11.1	9.9	8.6	6.9	5.9	4.6
		050	50.1	33.1	27.3	22.2	19.3	17.2	14.9	12.0	10.3	8.0
		063	85.1	55.6	45.8	37.4	32.4	28.9	25.0	20.2	17.2	
		080	164	127	110	96	83	75	64	52	44	
	180	040	30.6	20.6	17.0	13.8	12.0	10.7	9.3	7.5	6.4	5.1
		050	50.1	35.7	29.4	24.0	20.8	18.6	16.1	13.0	11.2	8.9
		063	119	68.5	56.5	46.1	39.9	35.7	30.8	25.0	21.4	
		080	242	179	148	120	104	93	81	65	56	
	210	040	30.6	21.8	17.9	14.6	12.7	11.3	9.8	8.0	6.9	5.5
		050	50.1	37.7	31.1	25.4	22.0	19.6	17.0	13.8	11.9	9.5
		063	119	72.5	59.8	48.8	42.2	37.8	32.7	26.6	22.8	
		080	242	190	156	128	110	99	85	69	60	
	240	040	30.6	22.8	18.8	15.3	13.3	11.9	10.3	8.4	7.2	5.8
		050	50.1	39.4	32.5	26.5	23.0	20.5	17.8	14.5	12.5	10.0
		063	119	75.8	62.5	51.0	44.1	39.5	34.2	27.8	24.0	
		080	242	198	163	133	115	103	89	73	63	
	270	040	30.6	23.5	19.4	15.9	13.7	12.3	10.6	8.7	7.5	6.0
		050	50.1	40.7	33.7	27.5	23.8	21.3	18.4	15.0	13.0	10.5
		063	119	78.3	64.7	52.9	45.8	40.9	35.4	28.9	24.9	
		080	242	205	169	138	120	107	92.6	75.4	65.1	
	300	040	30.6	23.7	20.0	16.4	14.2	12.7	11.0	8.9	7.7	6.2
		050	50.1	41.1	34.7	28.3	24.5	21.9	19.0	15.5	13.4	10.8
		063	119	79.0	66.7	54.5	47.2	42.2	36.5	29.8	25.7	
		080	262	252	222	181	157	140	121	99	86	
	330	040	30.6	23.9	20.6	16.8	14.5	13.0	11.3	9.2	7.9	6.4
		050	50.1	41.3	35.6	29.1	25.2	22.5	19.5	15.9	13.7	11.1
		063	119	79.5	68.5	55.9	48.4	43.3	37.5	30.6	26.4	
		080	262	253	228	186	161	144	125	102	88	
18	120	040	10.9	7.88	6.85	6.31	5.95	5.68	5.33	4.29	3.59	2.60
		050	37.9	22.3	18.4	15.0	13.0	11.6	10.0	8.0	6.8	5.0
		063	85.1	52.3	43.1	35.2	30.4	27.2	23.4	18.8	15.9	
		080	152	75.8	62.5	50.9	44.0	39.3	33.8	26.9	22.3	
	150	040	10.9	8.71	7.58	6.99	6.59	6.29	5.93	4.81	4.09	3.12
		050	37.9	24.6	20.3	16.6	14.3	12.8	11.1	9.0	7.6	5.9
		063	85.1	57.8	47.7	38.9	33.7	30.1	26.0	21.0	17.9	
		080	164	132	115	100	87	78	67	54	46	
	180	040	30.6	21.2	17.5	14.3	12.4	11.1	9.6	7.8	6.7	5.3
		050	51.5	36.8	30.3	24.8	21.4	19.2	16.6	13.5	11.6	9.2
		063	85.1	62.0	51.1	41.7	36.1	32.3	27.9	22.7	19.4	
		080	164	141	123	108	93	83	72	58	50	
	210	040	30.6	22.4	18.4	15.1	13.0	11.7	10.1	8.2	7.1	5.7
		050	51.5	38.8	31.9	26.1	22.6	20.2	17.5	14.2	12.3	9.8
		063	85.1	65.3	53.8	43.9	38.0	34.0	29.4	23.9	20.6	
		080	164	149	130	113	98	88	76	62	53	
	240	040	30.6	23.3	19.2	15.7	13.6	12.1	10.5	8.6	7.4	5.9
		050	51.5	40.4	33.3	27.2	23.5	21.0	18.2	14.8	12.8	10.3
		063	85.1	68.1	56.1	45.8	39.6	35.4	30.7	25.0	21.5	
		080	164	155	135	118	102	91	79	64	56	
	270	040	30.6	23.7	19.9	16.2	14.1	12.6	10.9	8.9	7.7	6.2
		050	51.5	41.1	34.4	28.1	24.3	21.7	18.8	15.3	13.3	10.7

● RGIS flange shaft (2 dwell)

Cam curve/MS

Index number	Total index angle (deg)	Size	Static rated output torque (N·m)	Rated dynamic output torque (N·m)								
				Input shaft rotational speed (rpm)								
				15	30	45	60	75	100	150	200	300
18	270	063	85.1	69.3	58.0	47.4	41.0	36.7	31.7	25.8	22.3	
		080	164	158	140	122	106	95	82	67	58	
	300	040	30.6	23.9	20.4	16.7	14.5	12.9	11.2	9.1	7.9	6.4
		050	51.5	41.4	35.4	28.9	25.0	22.4	19.4	15.8	13.6	11.1
		063	85.1	69.8	59.7	48.7	42.2	37.7	32.6	26.6	23.0	
		080	164	159	144	126	109	97	84	69	59	
	330	040	30.6	24.1	21.0	17.1	14.8	13.3	11.5	9.4	8.1	6.6
		050	51.5	41.6	36.2	29.6	25.6	22.9	19.8	16.2	14.0	11.4
		063	85.1	70.2	61.1	49.9	43.2	38.7	33.5	27.3	23.6	
		080	164	160	147	129	112	100	86	70	61	
20	90	040	10.2	6.53	5.37	4.38	3.77	3.35	2.86	2.20	1.71	0.87
		050	19.9	13.1	11.4	10.5	9.8	9.3	8.7	7.0	5.8	4.0
		063	25.3	16.5	14.3	13.2	12.4	11.8	11.0	9.7	8.2	
		080	108	59.6	49.1	40.0	34.5	30.7	26.2	20.3	16.0	
	120	040	10.9	8.19	7.13	6.57	6.19	5.91	5.55	4.48	3.77	2.77
		050	37.9	23.2	19.1	15.6	13.5	12.0	10.4	8.4	7.1	5.3
		063	63.6	40.9	33.7	27.5	23.8	21.2	18.3	14.7	12.3	
		080	152	78.9	65.0	53.0	45.8	40.9	35.2	28.1	23.4	
	150	040	10.9	8.99	7.82	7.21	6.80	6.50	6.12	4.97	4.23	3.26
		050	37.9	25.4	20.9	17.1	14.8	13.2	11.4	9.2	7.9	6.2
		063	63.6	44.8	37.0	30.2	26.1	23.3	20.1	16.3	13.8	
		080	152	86.5	71.3	58.2	50.3	45.0	38.8	31.3	26.5	
	180	040	10.9	9.59	8.35	7.69	7.26	6.94	6.54	5.33	4.57	3.59
		050	37.9	27.1	22.3	18.2	15.8	14.1	12.2	9.9	8.5	6.7
		063	63.6	47.8	39.4	32.2	27.8	24.9	21.5	17.4	14.9	
		080	152	92.3	76.1	62.1	53.7	48.0	41.5	33.6	28.7	
	210	040	10.9	10.1	8.8	8.1	7.6	7.3	6.9	5.6	4.8	3.8
		050	37.9	28.4	23.4	19.1	16.5	14.8	12.8	10.4	9.0	7.2
		063	63.6	50.2	41.4	33.8	29.2	26.1	22.6	18.4	15.8	
		080	164	152	132	116	100	90	78	63	54	
	240	040	10.9	10.4	9.1	8.4	7.9	7.6	7.1	5.8	5.0	4.0
		050	37.9	29.4	24.3	19.8	17.2	15.4	13.3	10.8	9.3	7.5
		063	63.6	52.0	43.0	35.1	30.4	27.2	23.5	19.1	16.5	
		080	164	158	138	120	104	93	81	66	57	
	270	040	10.9	10.5	9.4	8.7	8.2	7.8	7.4	6.0	5.2	4.2
		050	37.9	29.7	25.1	20.5	17.7	15.9	13.7	11.2	9.7	7.8
		063	63.6	52.5	44.4	36.2	31.4	28.1	24.3	19.8	17.0	
		080	164	159	142	124	108	96	83	68	59	
	300	040	10.9	10.6	9.7	8.9	8.4	8.0	7.6	6.2	5.4	4.3
		050	37.9	29.8	25.8	21.0	18.2	16.3	14.1	11.5	9.9	8.0
		063	85.1	70.2	60.7	49.5	42.9	38.3	33.2	27.1	23.4	
		080	164	160	146	128	111	99	86	70	60	
	330	040	10.9	10.6	9.9	9.1	8.6	8.2	7.8	6.4	5.5	4.4
		050	37.9	30.0	26.4	21.5	18.6	16.7	14.4	11.8	10.2	8.2
		063	85.1	70.5	62.1	50.7	43.9	39.3	34.0	27.7	24.0	
		080	164	161	150	131	113	101	88	72	62	
24	90	040	7.19	5.14	4.23	3.45	2.97	2.64	2.25	1.72	1.34	0.65
		050	12.8	9.31	8.10	7.45	7.02	6.69	6.26	4.98	4.09	2.72
		063	25.3	17.8	15.5	14.3	13.4	12.8	11.9	10.7	9.1	
		080	80.0	48.3	39.8	32.4	27.9	24.8	21.2	16.4	12.9	
	120	040	7.19	5.77	4.75	3.87	3.35	2.98	2.56	2.03	1.67	1.10
		050	12.8	10.4	9.1	8.4	7.9	7.5	7.1	5.7	4.8	3.6
		063	25.3	20.2	17.6	16.2	15.3	14.6	13.7	12.4	11.0	
		080	108	73.3	60.4	49.3	42.6	38.0	32.7	26.2	22.0	

Roller gear cam drive (aluminum housing)

Output torque table

Index series

● RGIS flange shaft (2 dwell)

Cam curve/MS

Index number	Total index angle (deg)	Size	Static rated output torque (N·m)	Rated dynamic output torque (N·m)								
				Input shaft rotational speed (rpm)								
				15	30	45	60	75	100	150	200	300
24	150	040	10.2	8.49	7.00	5.71	4.94	4.41	3.81	3.07	2.60	1.96
		050	12.8	11.2	9.8	9.0	8.5	8.1	7.7	6.2	5.3	4.1
		063	63.6	47.0	38.7	31.6	27.3	24.4	21.1	17.1	14.6	
		080	108	79.5	65.5	53.4	46.2	41.3	35.6	28.8	24.4	
	180	040	10.2	8.96	7.39	6.03	5.22	4.66	4.03	3.26	2.78	2.16
		050	12.8	11.8	10.3	9.5	9.0	8.6	8.1	6.6	5.7	4.5
		063	63.6	49.7	41.0	33.4	28.9	25.9	22.4	18.2	15.6	
		080	108	84.1	69.3	56.6	49.0	43.8	37.8	30.6	26.2	
	210	040	10.2	9.34	7.70	6.28	5.44	4.86	4.20	3.41	2.93	2.31
		050	12.8	12.3	10.7	9.9	9.3	8.9	8.4	6.9	5.9	4.7
		063	63.6	51.9	42.8	34.9	30.2	27.0	23.4	19.0	16.4	
		080	152	100	83	67	58	52	45	37	32	
	240	040	10.2	9.47	7.96	6.50	5.63	5.03	4.35	3.54	3.04	2.42
		050	12.8	12.5	11.1	10.2	9.7	9.2	8.7	7.1	6.1	4.9
		063	63.6	52.7	44.3	36.2	31.3	28.0	24.2	19.7	17.0	
		080	152	102	86	70	60	54	47	38	33	
	270	040	10.2	9.51	8.19	6.69	5.79	5.18	4.48	3.65	3.14	2.51
		050	37.9	29.9	25.8	21.1	18.2	16.3	14.1	11.5	9.9	8.0
		063	63.6	53.0	45.6	37.3	32.3	28.8	25.0	20.3	17.6	
		080	152	102	88	72	62	56	48	39	34	
	300	040	10.2	9.55	8.40	6.86	5.94	5.31	4.59	3.74	3.22	2.59
		050	37.9	30.1	26.4	21.6	18.7	16.7	14.5	11.8	10.2	8.3
		063	63.6	53.2	46.8	38.2	33.1	29.6	25.6	20.9	18.0	
		080	152	103	90	74	64	57	49	40	35	
	330	040	10.2	9.57	8.58	7.01	6.07	5.42	4.69	3.82	3.30	2.66
		050	37.9	30.2	27.0	22.1	19.1	17.1	14.8	12.1	10.4	8.5
		063	63.6	53.4	47.9	39.1	33.8	30.3	26.2	21.4	18.5	
		080	152	103	92	75	65	58	51	41	36	
30	90	080	31.8	24.3	21.2	19.4	18.3	17.4	16.2	14.3	11.9	
	120	080	80.0	57.9	47.7	38.9	33.6	30.0	25.9	20.7	17.3	
	150	080	80.0	62.0	51.1	41.7	36.0	32.2	27.8	22.4	19.0	
	180	080	80.0	65.1	53.7	43.8	37.9	33.9	29.3	23.7	20.3	
	210	080	80.0	66.6	55.8	45.5	39.4	35.2	30.5	24.7	21.2	
	240	080	80.0	67.0	57.6	47.0	40.7	36.4	31.5	25.6	22.0	
	270	080	80.0	67.2	59.2	48.3	41.8	37.4	32.4	26.3	22.7	
	300	080	80.0	67.4	60.6	49.5	42.8	38.3	33.2	27.0	23.3	
	330	080	80.0	67.5	61.9	50.5	43.8	39.1	33.9	27.6	23.8	
32	90	080	31.8	24.8	21.6	19.8	18.6	17.7	16.5	14.6	12.3	
	120	080	31.8	27.4	23.8	22.0	20.7	19.7	18.5	16.7	14.6	
	150	080	31.8	29.3	25.5	23.5	22.1	21.1	19.9	18.1	16.1	
	180	080	80.0	65.8	54.2	44.2	38.3	34.2	29.6	24.0	20.5	
	210	080	80.0	66.8	56.3	46.0	39.8	35.6	30.8	25.0	21.5	
	240	080	80.0	67.1	58.1	47.4	41.1	36.7	31.8	25.8	22.2	
	270	080	80.0	67.3	59.7	48.7	42.2	37.7	32.6	26.6	22.9	
	300	080	80.0	67.5	61.1	49.9	43.2	38.6	33.4	27.2	23.5	
	330	080	80.0	67.6	62.4	50.9	44.1	39.4	34.1	27.8	24.0	

Output torque table

● RGIS flange shaft (3 dwell)

Cam curve/MS

Index number	Total index angle (deg)	Size	Static rated output torque (N·m)	Rated dynamic output torque (N·m)								
				Input shaft rotational speed (rpm)								
				10	20	30	40	50	70	100	140	200
24	150	040	10.9	8.73	7.59	7.00	6.60	6.31	5.82	4.84	4.02	3.21
		050	19.9	16.1	14.0	12.9	12.2	11.6	10.8	10.0	8.8	7.1
		063	85.1	57.9	47.7	39.0	33.7	30.1	25.4	21.1	17.6	14.2
		080	164	132	115	100	87	78	66	55	45	37
	180	040	30.6	21.4	17.7	14.4	12.5	11.2	9.4	7.9	6.6	5.4
		050	50.1	37.1	30.6	25.0	21.6	19.3	16.3	13.6	11.4	9.4
		063	85.1	62.5	51.5	42.1	36.4	32.6	27.5	22.9	19.2	15.7
		080	242	186	154	125	109	97	82	68	57	47
	210	040	30.6	22.7	18.7	15.3	13.2	11.8	10.0	8.3	7.0	5.8
		050	50.1	39.3	32.4	26.4	22.9	20.5	17.3	14.4	12.1	10.0
		063	85.1	66.2	54.5	44.5	38.6	34.5	29.1	24.3	20.4	16.8
		080	242	197	163	133	115	103	87	72	61	50
	240	040	30.6	23.2	19.5	15.9	13.8	12.3	10.4	8.7	7.3	6.1
		050	50.1	40.2	33.8	27.6	23.9	21.4	18.1	15.1	12.7	10.5
		063	85.1	67.8	57.0	46.5	40.3	36.0	30.4	25.4	21.4	17.7
		080	262	246	216	177	153	137	115	96	81	67
	270	040	30.6	23.5	20.3	16.5	14.3	12.8	10.8	9.0	7.6	6.3
		050	50.1	40.7	35.1	28.6	24.8	22.2	18.7	15.6	13.2	11.0
		063	85.1	68.6	59.1	48.3	41.8	37.4	31.6	26.4	22.2	18.4
		080	262	249	224	183	159	142	120	100	84	70
	300	040	30.6	23.7	20.9	17.0	14.8	13.2	11.1	9.3	7.9	6.5
		050	50.1	41.1	36.1	29.5	25.5	22.8	19.3	16.1	13.6	11.3
		063	85.1	69.2	60.9	49.7	43.1	38.5	32.5	27.2	22.9	19.0
		080	262	252	231	189	163	146	123	103	87	72
	330	040	30.6	23.9	21.4	17.5	15.1	13.5	11.4	9.6	8.1	6.7
		050	50.1	41.3	37.1	30.3	26.2	23.4	19.8	16.6	14.0	11.6
		063	85.1	69.7	62.5	51.0	44.2	39.5	33.4	27.9	23.5	19.6
		080	262	253	237	194	168	150	127	106	89	74
30	120	040	10.9	8.53	7.43	6.84	6.45	6.17	5.69	4.71	3.89	3.10
		050	22.8	17.9	15.6	14.3	13.5	12.6	10.6	8.8	7.3	5.8
		063	63.6	42.6	35.1	28.6	24.8	22.1	18.6	15.4	12.7	10.0
		080	152	82.2	67.7	55.2	47.8	42.7	35.9	29.6	24.3	18.8
	150	040	10.9	9.36	8.15	7.51	7.09	6.77	6.26	5.20	4.34	3.51
		050	37.9	26.4	21.8	17.8	15.4	13.8	11.6	9.7	8.1	6.6
		063	85.1	62.1	51.2	41.8	36.2	32.3	27.3	22.7	19.0	15.5
		080	152	90.1	74.3	60.6	52.5	46.9	39.5	32.8	27.2	21.8
	180	040	10.9	9.99	8.69	8.01	7.56	7.23	6.68	5.57	4.67	3.82
		050	37.9	28.2	23.2	19.0	16.4	14.7	12.4	10.3	8.7	7.1
		063	85.1	66.3	54.6	44.6	38.6	34.5	29.1	24.3	20.4	16.8
		080	152	96.1	79.2	64.7	56.0	50.0	42.2	35.1	29.4	23.9
	210	040	10.9	10.3	9.1	8.4	7.9	7.6	7.0	5.9	4.9	4.1
		050	37.9	29.1	24.4	19.9	17.2	15.4	13.0	10.9	9.1	7.6
		063	85.1	68.4	57.3	46.8	40.5	36.2	30.6	25.5	21.5	17.8
		080	164	156	138	121	105	93	79	66	55	46
	240	040	10.9	10.4	9.5	8.7	8.3	7.9	7.3	6.1	5.1	4.2
		050	37.9	29.4	25.3	20.7	17.9	16.0	13.5	11.3	9.5	7.9
		063	85.1	69.2	59.6	48.6	42.1	37.7	31.8	26.6	22.4	18.6
		080	164	158	143	125	109	97	82	69	58	48
	270	040	10.9	10.5	9.8	9.0	8.5	8.1	7.5	6.3	5.3	4.4
		050	37.9	29.7	26.1	21.3	18.5	16.5	14.0	11.7	9.8	8.2
		063	85.1	69.8	61.5	50.2	43.5	38.9	32.8	27.4	23.1	19.2
		080	164	159	148	130	112	100	85	71	60	50
	300	040	10.9	10.6	10.1	9.3	8.8	8.4	7.7	6.5	5.5	4.5
		050	37.9	29.8	26.8	21.9	19.0	17.0	14.3	12.0	10.1	8.4

RGIS flange shaft (3 dwell)

Cam curve/MS

Index number	Total index angle (deg)	Size	Static rated output torque (N·m)	Rated dynamic output torque (N·m)								
				Input shaft rotational speed (rpm)								
				10	20	30	40	50	70	100	140	200
30	300	063	85.1	70.2	63.2	51.6	44.7	39.9	33.7	28.2	23.8	19.8
		080	164	160	152	133	115	103	87	73	61	51
	330	040	10.9	10.6	10.3	9.5	9.0	8.6	7.9	6.6	5.6	4.7
		050	37.9	30.0	27.5	22.4	19.4	17.4	14.7	12.3	10.4	8.6
		063	85.1	70.5	64.7	52.8	45.7	40.9	34.6	28.9	24.4	20.3
		080	164	161	156	136	118	106	89	75	63	52
36	90	040	7.19	5.36	4.41	3.60	3.10	2.76	2.30	1.86	1.44	0.94
		050	13.1	8.87	7.31	5.96	5.15	4.58	3.83	3.11	2.45	1.68
		063	16.4	12.3	10.7	9.9	9.3	8.8	8.1	6.6	5.1	3.4
		080	80.0	50.3	41.4	33.8	29.2	26.0	21.7	17.6	13.8	9.4
	120	040	10.2	8.21	6.76	5.52	4.77	4.26	3.59	2.96	2.43	1.88
		050	12.8	10.9	9.5	8.7	8.2	7.9	7.3	6.0	5.0	3.9
		063	25.3	21.1	18.3	16.9	15.9	15.2	14.2	13.1	11.3	8.9
		080	108	76.4	62.9	51.3	44.4	39.7	33.4	27.6	22.7	17.7
	150	040	10.2	8.85	7.29	5.95	5.15	4.60	3.88	3.22	2.67	2.14
		050	12.8	11.7	10.2	9.4	8.9	8.5	7.8	6.5	5.4	4.4
		063	63.6	48.9	40.3	32.9	28.5	25.5	21.5	17.9	14.9	12.1
		080	108	82.7	68.2	55.7	48.2	43.0	36.3	30.2	25.1	20.2
	180	040	10.2	9.30	7.69	6.28	5.44	4.86	4.10	3.41	2.85	2.32
		050	12.8	12.3	10.7	9.9	9.3	8.9	8.3	6.9	5.8	4.7
		063	63.6	51.6	42.7	34.8	30.2	27.0	22.8	19.0	15.9	13.1
		080	108	87.3	72.2	58.9	51.0	45.6	38.5	32.0	26.8	21.9
	210	040	10.2	9.40	8.02	6.55	5.67	5.07	4.28	3.56	2.99	2.45
		050	12.8	12.4	11.2	10.3	9.7	9.3	8.6	7.2	6.0	5.0
		063	63.6	52.2	44.6	36.4	31.5	28.2	23.8	19.9	16.7	13.8
		080	152	101	86	70	61	54	46	38	32	26
	240	040	10.2	9.47	8.29	6.77	5.86	5.24	4.43	3.69	3.10	2.56
		050	12.8	12.5	11.6	10.7	10.1	9.6	8.9	7.4	6.3	5.2
		063	63.6	52.7	46.2	37.7	32.6	29.2	24.6	20.6	17.3	14.4
		080	152	102	89	73	63	56	48	40	33	28
	270	040	10.2	9.51	8.53	6.97	6.03	5.39	4.55	3.80	3.20	2.65
		050	12.8	12.6	11.9	11.0	10.4	9.9	9.2	7.7	6.5	5.4
		063	63.6	53.0	47.5	38.8	33.6	30.0	25.4	21.2	17.9	14.8
		080	152	102	92	75	65	58	49	41	34	29
	300	040	10.2	9.55	8.74	7.14	6.18	5.53	4.67	3.90	3.28	2.72
		050	12.8	12.6	12.2	11.2	10.6	10.2	9.4	7.8	6.6	5.5
		063	63.6	53.2	48.7	39.8	34.5	30.8	26.0	21.8	18.4	15.3
		080	152	103	94	77	67	60	50	42	35	29
	330	040	10.2	9.57	8.94	7.30	6.32	5.65	4.77	3.99	3.36	2.79
		050	12.8	12.6	12.5	11.5	10.8	10.4	9.6	8.0	6.8	5.6
		063	63.6	53.4	49.8	40.7	35.2	31.5	26.6	22.3	18.8	15.6
		080	152	103	96	79	68	61	51	43	36	30
48	90	080	31.8	25.8	22.5	20.7	19.5	18.6	17.2	15.6	13.1	9.3
	120	080	31.8	28.5	24.8	22.9	21.6	20.6	19.2	17.6	15.2	11.8
	150	080	31.8	30.5	26.5	24.4	23.1	22.0	20.5	19.0	16.5	13.2
	180	080	80.0	66.3	56.5	46.1	39.9	35.7	30.1	25.1	21.0	17.1
	210	080	80.0	66.8	58.6	47.9	41.4	37.1	31.3	26.1	21.9	18.0
	240	080	80.0	67.1	60.5	49.4	42.8	38.2	32.3	27.0	22.7	18.7
	270	080	80.0	67.3	62.1	50.7	43.9	39.3	33.2	27.7	23.3	19.3
	300	080	80.0	67.5	63.6	51.9	45.0	40.2	34.0	28.4	23.9	19.9
	330	080	80.0	67.6	64.0	53.0	45.9	41.1	34.7	29.0	24.4	20.3

Roller gear cam drive (aluminum housing)

Output torque table

Index series

● RGIS flange shaft (4 dwell)

Cam curve/MS

Index number	Total index angle (deg)	Size	Static rated output torque (N·m)	Rated dynamic output torque (N·m)								
				Input shaft rotational speed (rpm)								
				10	15	20	30	40	50	75	100	150
32	180	040	10.9	9.16	8.44	7.97	7.34	6.93	6.62	5.41	4.66	3.72
		050	50.1	36.1	31.5	27.3	22.3	19.3	17.2	14.0	12.1	9.8
		063	85.1	60.8	53.0	45.9	37.5	32.5	29.0	23.6	20.3	16.3
		080	164	138	128	118	97	84	75	61	52	42
	210	040	30.6	22.0	19.2	16.7	13.6	11.8	10.5	8.6	7.4	6.0
		050	50.1	38.2	33.3	28.9	23.6	20.4	18.2	14.9	12.8	10.4
		063	85.1	64.3	56.1	48.6	39.7	34.4	30.7	25.0	21.6	17.4
		080	242	192	167	145	118	102	92	75	64	52
	240	040	30.6	23.0	20.1	17.4	14.2	12.3	11.0	9.0	7.8	6.3
		050	50.1	39.9	34.8	30.2	24.6	21.3	19.1	15.5	13.4	10.9
		063	85.1	67.2	58.7	50.8	41.5	35.9	32.1	26.2	22.6	18.3
		080	262	244	223	193	157	136	122	99	86	70
	270	040	30.6	23.5	20.8	18.1	14.7	12.8	11.4	9.3	8.0	6.5
		050	50.1	40.7	36.1	31.2	25.5	22.1	19.8	16.1	13.9	11.3
		063	85.1	68.6	60.8	52.7	43.0	37.2	33.3	27.2	23.5	19.0
		080	262	249	231	200	163	141	126	103	89	72
	300	040	30.6	23.7	21.5	18.6	15.2	13.2	11.8	9.6	8.3	6.7
		050	50.1	41.1	37.2	32.2	26.3	22.8	20.4	16.6	14.4	11.7
		063	85.1	69.2	62.7	54.3	44.3	38.4	34.3	28.0	24.2	19.7
		080	262	252	238	206	168	146	130	106	92	75
	330	040	30.6	23.9	22.0	19.1	15.6	13.5	12.1	9.8	8.5	6.9
		050	50.1	41.3	38.1	33.0	27.0	23.4	20.9	17.0	14.7	12.0
		063	85.1	69.7	64.3	55.7	45.5	39.4	35.2	28.7	24.9	20.2
		080	262	253	244	211	173	149	134	109	94	77
36	150	040	10.9	8.82	8.13	7.67	7.07	6.67	6.37	5.20	4.46	3.54
		050	37.9	24.9	21.8	18.8	15.4	13.3	11.9	9.7	8.3	6.6
		063	63.6	44.0	38.4	33.3	27.1	23.5	21.0	17.0	14.6	11.6
		080	152	84.9	74.1	64.2	52.3	45.3	40.4	32.8	28.1	22.0
	180	040	30.6	21.5	18.8	16.3	13.3	11.5	10.3	8.4	7.2	5.8
		050	51.5	37.3	32.5	28.2	23.0	19.9	17.8	14.5	12.5	10.1
		063	85.1	62.7	54.8	47.4	38.7	33.5	30.0	24.4	21.0	16.9
		080	164	143	132	122	100	86	77	63	54	44
	210	040	30.6	22.6	19.8	17.1	14.0	12.1	10.8	8.8	7.6	6.2
		050	51.5	39.2	34.2	29.6	24.2	21.0	18.7	15.3	13.2	10.7
		063	85.1	66.1	57.7	50.0	40.8	35.3	31.6	25.7	22.2	17.9
		080	164	151	139	129	105	91	81	66	57	46
	240	040	30.6	23.5	20.6	17.8	14.6	12.6	11.3	9.2	7.9	6.4
		050	51.5	40.7	35.7	30.9	25.2	21.8	19.5	15.9	13.8	11.2
		063	85.1	68.6	60.1	52.1	42.5	36.8	32.9	26.8	23.2	18.8
		080	164	156	145	134	110	95	85	69	60	48
	270	040	30.6	23.7	21.3	18.4	15.1	13.0	11.7	9.5	8.2	6.7
		050	51.5	41.1	36.9	31.9	26.1	22.6	20.2	16.5	14.2	11.6
		063	85.1	69.3	62.2	53.8	44.0	38.1	34.0	27.8	24.0	19.5
		080	164	158	150	139	113	98	88	72	62	50
	300	040	30.6	23.9	21.9	19.0	15.5	13.4	12.0	9.8	8.5	6.9
		050	51.5	41.4	37.9	32.8	26.8	23.2	20.8	16.9	14.7	11.9
		063	85.1	69.8	64.0	55.4	45.2	39.2	35.0	28.6	24.7	20.1
		080	164	159	154	143	117	101	90	74	64	52
	330	040	30.6	24.1	22.5	19.5	15.9	13.8	12.3	10.0	8.7	7.1
		050	51.5	41.6	38.8	33.6	27.5	23.8	21.3	17.4	15.0	12.2
		063	85.1	70.2	65.5	56.8	46.3	40.1	35.9	29.3	25.3	20.6
		080	164	160	158	146	120	104	93	76	65	53

● RGIS flange shaft (4 dwell)

Cam curve/MS

Index number	Total index angle (deg)	Size	Static rated output torque (N·m)	Rated dynamic output torque (N·m)								
				Input shaft rotational speed (rpm)								
				10	15	20	30	40	50	75	100	150
40	150	040	10.9	9.10	8.39	7.92	7.30	6.88	6.58	5.37	4.62	3.67
		050	37.9	25.7	22.4	19.4	15.9	13.7	12.3	10.0	8.6	6.9
		063	63.6	45.4	39.6	34.3	28.0	24.2	21.6	17.6	15.1	12.0
		080	152	87.6	76.4	66.2	54.0	46.7	41.7	33.9	29.0	22.9
	180	040	10.9	9.70	8.95	8.44	7.78	7.35	7.02	5.74	4.95	3.97
		050	37.9	27.4	23.9	20.7	16.9	14.6	13.1	10.7	9.2	7.4
		063	85.1	64.4	56.2	48.7	39.7	34.4	30.7	25.0	21.6	17.4
		080	164	147	135	126	102	89	79	65	56	45
	210	040	10.9	10.2	9.4	8.9	8.2	7.7	7.4	6.0	5.2	4.2
		050	37.9	28.7	25.1	21.7	17.7	15.3	13.7	11.2	9.7	7.8
		063	85.1	67.6	59.0	51.1	41.7	36.1	32.3	26.3	22.7	18.4
		080	164	154	142	132	108	93	83	68	59	47
	240	040	10.9	10.4	9.8	9.2	8.5	8.0	7.7	6.3	5.4	4.4
		050	37.9	29.4	26.0	22.6	18.4	15.9	14.3	11.6	10.1	8.2
		063	85.1	69.2	61.3	53.1	43.3	37.5	33.6	27.4	23.6	19.2
		080	164	158	148	137	112	97	87	71	61	49
	270	040	10.9	10.5	10.1	9.5	8.8	8.3	7.9	6.5	5.6	4.5
		050	37.9	29.7	26.9	23.3	19.0	16.5	14.7	12.0	10.4	8.4
		063	85.1	69.8	63.3	54.8	44.7	38.7	34.6	28.3	24.4	19.8
		080	164	159	152	141	115	100	89	73	63	51
	300	040	10.9	10.6	10.4	9.8	9.0	8.5	8.1	6.7	5.8	4.7
		050	37.9	29.8	27.6	23.9	19.5	16.9	15.1	12.3	10.7	8.7
		063	85.1	70.2	65.0	56.3	46.0	39.8	35.6	29.0	25.1	20.4
		080	164	160	157	145	119	103	92	75	65	53
	330	040	10.9	10.6	10.6	10.0	9.2	8.7	8.3	6.8	5.9	4.8
		050	37.9	30.0	28.3	24.5	20.0	17.3	15.5	12.6	10.9	8.9
		063	85.1	70.5	66.6	57.6	47.1	40.8	36.4	29.7	25.7	20.9
		080	164	161	160	149	121	105	94	77	66	54
48	120	040	10.2	7.98	6.96	6.03	4.92	4.25	3.79	3.07	2.61	2.01
		050	12.8	10.6	9.7	9.2	8.5	8.0	7.6	6.2	5.3	4.2
		063	25.3	20.5	18.9	17.8	16.4	15.5	14.8	13.5	12.1	9.5
		080	80.0	55.4	48.3	41.8	34.1	29.5	26.3	21.2	18.0	13.7
	150	040	10.2	8.60	7.50	6.50	5.30	4.59	4.10	3.32	2.85	2.25
		050	12.8	11.4	10.5	9.9	9.1	8.6	8.2	6.7	5.8	4.6
		063	63.6	47.5	41.5	35.9	29.3	25.4	22.7	18.4	15.9	12.7
		080	108	80.4	70.2	60.8	49.6	42.9	38.3	31.1	26.7	21.1
	180	040	10.2	9.07	7.92	6.86	5.60	4.84	4.33	3.52	3.03	2.42
		050	12.8	12.0	11.1	10.4	9.6	9.1	8.7	7.1	6.1	4.9
		063	63.6	50.3	43.9	38.0	31.0	26.9	24.0	19.6	16.9	13.6
		080	108	85.1	74.3	64.3	52.5	45.5	40.6	33.0	28.5	22.8
	210	040	10.2	9.40	8.25	7.15	5.83	5.05	4.51	3.67	3.17	2.55
		050	12.8	12.4	11.5	10.9	10.0	9.5	9.0	7.4	6.4	5.2
		063	63.6	52.2	45.9	39.7	32.4	28.1	25.1	20.5	17.7	14.3
		080	152	101	89	77	63	54	48	39	34	27
	240	040	10.2	9.47	8.54	7.39	6.03	5.22	4.67	3.81	3.28	2.65
		050	12.8	12.5	11.9	11.2	10.4	9.8	9.4	7.7	6.6	5.4
		063	63.6	52.7	47.5	41.1	33.6	29.1	26.0	21.2	18.3	14.8
		080	152	102	92	79	65	56	50	41	35	29
	270	040	10.2	9.51	8.78	7.60	6.21	5.38	4.81	3.92	3.38	2.74
		050	12.8	12.6	12.2	11.6	10.7	10.1	9.6	7.9	6.8	5.5
		063	63.6	53.0	48.9	42.4	34.6	29.9	26.8	21.8	18.9	15.3
		080	152	102	94	82	67	58	52	42	36	30
	300	040	10.2	9.55	9.00	7.79	6.36	5.51	4.93	4.02	3.47	2.81
		050	12.8	12.6	12.6	11.8	10.9	10.3	9.9	8.1	7.0	5.7

Output torque table

● RGIS flange shaft (4 dwell)

Cam curve/MS

Index number	Total index angle (deg)	Size	Static rated output torque (N·m)	Rated dynamic output torque (N·m)								
				Input shaft rotational speed (rpm)								
				10	15	20	30	40	50	75	100	150
48	300	063	63.6	53.2	50.2	43.4	35.5	30.7	27.5	22.4	19.4	15.8
		080	152	103	97	84	68	59	53	43	37	30
	330	040	10.2	9.57	9.06	7.97	6.50	5.63	5.03	4.11	3.55	2.88
		050	12.8	12.6	12.6	12.1	11.2	10.5	10.1	8.3	7.1	5.8
		063	63.6	53.4	50.5	44.4	36.3	31.4	28.1	22.9	19.8	16.1
		080	152	103	98	86	70	61	54	44	38	31

Roller gear cam drive (aluminum housing)

Output torque table

Oscillating series

● RGOS straight shaft

Cam curve/MS

Oscillating angle (deg)	Total index angle (deg)	Size	Static rated output torque (N·m)	Rated dynamic output torque (N·m)								
				Input shaft rotational speed (rpm)								
				15	30	45	60	75	100	150	200	300
120	360	040	10.9	5.97	5.20	4.79	4.52	4.32	4.08	3.34	2.88	2.31
		050	19.9	11.1	9.6	8.9	8.4	8.0	7.6	6.9	6.2	
		063	85.1	39.7	32.7	26.7	23.1	20.7	17.8	14.5		
		080	164	90.3	78.6	68.7	59.5	53.2	46.0	37.3		
90	300	040	10.2	5.95	4.90	4.00	3.46	3.10	2.68	2.18	1.87	1.49
		050	12.8	7.95	6.92	6.37	6.01	5.75	5.41	4.41	3.77	
		063	63.6	31.6	26.0	21.2	18.4	16.4	14.2	11.4	9.7	
		080	108	53.3	43.9	35.8	31.0	27.7	23.9	19.2		
	360	040	10.9	7.21	6.28	5.79	5.47	5.23	4.93	4.04	3.49	2.82
		050	19.9	13.4	11.6	10.7	10.1	9.7	9.1	8.4	7.6	6.1
		063	63.6	36.0	29.7	24.2	21.0	18.8	16.2	13.2	11.3	
		080	152	69.4	57.2	46.7	40.4	36.1	31.2	25.3	21.6	
60	180	040	10.9	5.57	4.85	4.47	4.22	4.03	3.80	3.10	2.66	2.09
		050	37.9	15.9	13.1	10.7	9.2	8.2	7.1	5.7	4.8	
		063	85.1	37.0	30.5	24.9	21.5	19.2	16.6	13.3		
		080	164	84.2	73.3	64.1	55.4	49.5	42.7	34.4		
	240	040	41.6	22.0	18.1	14.8	12.8	11.4	9.9	8.1	7.0	5.6
		050	67.0	36.5	30.1	24.6	21.3	19.0	16.5	13.4	11.5	9.2
		063	119	52.5	43.3	35.3	30.6	27.3	23.6	19.2	16.4	
		080	262	167	144	117	102	91	78	64	55	
	300	040	41.6	25.3	20.8	17.0	14.7	13.2	11.4	9.3	8.1	6.5
		050	67.0	42.0	34.6	28.2	24.5	21.9	18.9	15.4	13.3	10.8
		063	129	94.9	82.6	72.3	62.6	56.0	48.4	39.5	34.0	
		080	262	192	165	135	117	105	90	74	63	
	360	040	41.6	27.9	23.0	18.8	16.3	14.5	12.6	10.3	8.9	7.2
		050	67.0	46.2	38.1	31.1	26.9	24.1	20.8	17.0	14.7	11.9
		063	129	105	91	80	69	62	53	44	38	
		080	431	258	213	174	150	134	116	95	82	
45	180	040	10.9	6.73	5.86	5.40	5.10	4.87	4.60	3.75	3.23	2.58
		050	50.1	26.7	22.0	18.0	15.5	13.9	12.0	9.7	8.3	6.6
		063	85.1	44.7	36.9	30.1	26.0	23.2	20.1	16.2	13.8	
		080	164	102	89	77	67	60	52	42	36	
	240	040	30.6	18.3	15.1	12.3	10.6	9.5	8.2	6.7	5.8	4.7
		050	50.1	31.8	26.2	21.4	18.5	16.5	14.3	11.7	10.0	8.1
		063	85.1	53.4	44.0	35.9	31.1	27.8	24.0	19.5	16.8	
		080	242	159	131	107	93	83	72	58	50	
	300	040	30.6	20.4	16.8	13.7	11.9	10.6	9.2	7.5	6.5	5.3
		050	50.1	35.4	29.2	23.9	20.7	18.5	16.0	13.0	11.3	9.1
		063	85.1	59.6	49.1	40.1	34.7	31.1	26.9	21.9	18.9	
		080	242	178	146	120	104	93	80	65	56	
	360	040	30.6	22.0	18.2	14.8	12.8	11.5	9.9	8.1	7.0	5.7
		050	50.1	38.2	31.5	25.7	22.3	19.9	17.2	14.1	12.2	9.9
		063	85.1	64.4	53.0	43.3	37.5	33.5	29.0	23.7	20.4	
		080	242	192	158	129	112	100	87	71	61	
30	180	040	7.19	5.51	4.54	3.71	3.21	2.87	2.48	2.02	1.74	1.38
		050	12.8	9.98	8.69	8.01	7.55	7.22	6.81	5.55	4.76	3.76
		063	25.3	19.1	16.6	15.3	14.5	13.8	13.0	11.9	10.6	
		080	108	69.2	57.0	46.6	40.3	36.0	31.1	25.1	21.4	
	240	040	10.2	8.45	6.96	5.69	4.92	4.40	3.81	3.11	2.68	2.17
		050	12.8	11.2	9.7	9.0	8.5	8.1	7.6	6.3	5.4	4.3
		063	25.3	21.7	18.9	17.4	16.4	15.7	14.8	13.6	12.2	
		080	108	78.6	64.8	52.9	45.8	40.9	35.4	28.7	24.7	
	300	040	10.2	9.11	7.50	6.13	5.31	4.75	4.11	3.35	2.90	2.35
		050	12.8	12.0	10.5	9.7	9.1	8.7	8.2	6.7	5.8	4.7

RGOS straight shaft

Cam curve/MS

Oscillating angle (deg)	Total index angle (deg)	Size	Static rated output torque (N·m)	Rated dynamic output torque (N·m)								
				Input shaft rotational speed (rpm)								
				15	30	45	60	75	100	150	200	300
30	300	063	25.3	23.5	20.4	18.9	17.8	17.0	16.0	14.8	13.3	
		080	108	85.2	70.2	57.3	49.6	44.4	38.4	31.2	26.9	
	360	040	10.2	9.30	7.92	6.46	5.60	5.01	4.34	3.54	3.06	2.49
		050	12.8	12.3	11.1	10.2	9.6	9.2	8.7	7.1	6.2	5.0
		063	25.3	24.1	21.6	20.0	18.8	18.0	17.0	15.6	14.1	
		080	108	87.3	74.3	60.7	52.5	47.0	40.7	33.1	28.6	

Roller gear cam drive (aluminum housing)

Output torque table

Oscillating series

● RGOS flange shaft

Cam curve/MS

Oscillating angle (deg)	Total index angle (deg)	Size	Static rated output torque (N·m)	Rated dynamic output torque (N·m)								
				Input shaft rotational speed (rpm)								
				15	30	45	60	75	100	150	200	300
120	360	040	10.9	5.97	5.19	4.79	4.51	4.31	4.05	3.26	2.75	2.02
		050	19.9	11.1	9.6	8.9	8.4	8.0	7.5	6.9	6.1	
		063	85.1	39.7	32.7	26.7	23.1	20.6	17.8	14.3		
		080	164	90.2	78.5	68.7	59.4	53.1	45.8	37.0		
90	300	040	10.2	5.95	4.90	3.99	3.45	3.08	2.64	2.10	1.73	1.18
		050	12.8	7.94	6.91	6.37	6.00	5.73	5.38	4.33	3.63	
		063	63.6	31.6	26.0	21.2	18.3	16.4	14.1	11.3	9.5	
		080	108	53.3	43.9	35.8	30.9	27.6	23.7	18.9		
	360	040	10.9	7.21	6.28	5.78	5.46	5.21	4.91	3.98	3.39	2.60
		050	19.9	13.3	11.6	10.7	10.1	9.7	9.1	8.3	7.5	5.8
		063	63.6	36.0	29.7	24.2	21.0	18.7	16.2	13.1	11.1	
		080	152	69.4	57.2	46.7	40.4	36.1	31.1	25.1	21.2	
60	180	040	10.9	5.57	4.84	4.46	4.19	3.99	3.73	2.95	2.40	1.51
		050	37.9	15.9	13.1	10.7	9.2	8.2	7.0	5.6	4.6	
		063	85.1	37.0	30.5	24.9	21.5	19.2	16.5	13.1		
		080	164	84.2	73.3	64.0	55.3	49.3	42.4	33.7		
	240	040	41.6	22.0	18.1	14.8	12.8	11.4	9.9	8.0	6.8	5.3
		050	67.0	36.5	30.1	24.6	21.3	19.0	16.4	13.3	11.4	8.9
		063	119	52.5	43.3	35.3	30.6	27.3	23.6	19.0	16.2	
		080	262	167	144	117	101	91	78	63	54	
	300	040	41.6	25.3	20.8	17.0	14.7	13.2	11.4	9.3	8.0	6.3
		050	67.0	42.0	34.6	28.2	24.4	21.9	18.9	15.4	13.2	10.6
		063	129	94.9	82.6	72.3	62.6	55.9	48.4	39.4	33.9	
		080	262	192	165	135	117	104	90	73	63	
	360	040	41.6	27.9	23.0	18.8	16.2	14.5	12.6	10.2	8.8	7.1
		050	67.0	46.2	38.1	31.1	26.9	24.1	20.8	17.0	14.6	11.8
		063	129	105	91	80	69	62	53	43	38	
		080	431	258	213	173	150	134	116	95	82	
45	180	040	10.9	6.73	5.85	5.39	5.08	4.85	4.55	3.65	3.04	2.14
		050	50.1	26.7	22.0	17.9	15.5	13.9	12.0	9.6	8.2	6.1
		063	85.1	44.7	36.8	30.1	26.0	23.2	20.0	16.0	13.5	
		080	164	102	89	77	67	60	52	41	35	
	240	040	30.6	18.3	15.0	12.3	10.6	9.5	8.2	6.7	5.7	4.5
		050	50.1	31.8	26.2	21.4	18.5	16.5	14.3	11.6	9.9	7.8
		063	85.1	53.4	44.0	35.9	31.1	27.8	24.0	19.4	16.6	
		080	242	159	131	107	93	83	71	58	50	
	300	040	30.6	20.4	16.8	13.7	11.9	10.6	9.2	7.5	6.4	5.1
		050	50.1	35.4	29.2	23.8	20.6	18.5	16.0	13.0	11.2	8.9
		063	85.1	59.6	49.1	40.1	34.7	31.0	26.8	21.8	18.7	
		080	242	178	146	120	104	93	80	65	56	
	360	040	30.6	22.0	18.2	14.8	12.8	11.5	9.9	8.1	7.0	5.6
		050	50.1	38.2	31.5	25.7	22.3	19.9	17.2	14.0	12.1	9.8
		063	85.1	64.4	53.0	43.3	37.5	33.5	29.0	23.6	20.3	
		080	242	192	158	129	112	100	87	70	61	
30	180	040	7.19	5.51	4.54	3.70	3.20	2.85	2.45	1.95	1.61	1.09
		050	12.8	9.98	8.68	8.00	7.54	7.20	6.77	5.48	4.63	3.47
		063	25.3	19.1	16.6	15.3	14.4	13.8	12.9	11.8	10.4	
		080	108	69.2	57.0	46.5	40.2	35.9	30.9	24.8	20.8	
	240	040	10.2	8.45	6.96	5.68	4.92	4.39	3.79	3.07	2.61	2.01
		050	12.8	11.2	9.7	9.0	8.5	8.1	7.6	6.2	5.3	4.2
		063	25.3	21.7	18.9	17.4	16.4	15.7	14.8	13.5	12.1	
		080	108	78.6	64.8	52.9	45.7	40.9	35.3	28.6	24.4	
	300	040	10.2	9.10	7.50	6.12	5.30	4.74	4.10	3.32	2.85	2.25
		050	12.8	12.0	10.5	9.7	9.1	8.7	8.2	6.7	5.8	4.6

● RGOS flange shaft

Cam curve/MS

Oscillating angle (deg)	Total index angle (deg)	Size	Static rated output torque (N·m)	Rated dynamic output torque (N·m)								
				Input shaft rotational speed (rpm)								
				15	30	45	60	75	100	150	200	300
30	300	063	25.3	23.5	20.4	18.8	17.8	17.0	16.0	14.7	13.2	
		080	108	85.2	70.2	57.3	49.6	44.3	38.3	31.1	26.7	
	360	040	10.2	9.30	7.92	6.46	5.60	5.00	4.33	3.52	3.03	2.42
		050	12.8	12.3	11.1	10.2	9.6	9.2	8.7	7.1	6.1	4.9
		063	25.3	24.1	21.6	20.0	18.8	18.0	17.0	15.6	14.1	
		080	108	87.3	74.3	60.7	52.5	46.9	40.6	33.0	28.5	

Roller gear cam drive

Table type

Index	**RGIT**	**063** to **250**
Reducer	**RGCT**	

● Common specifications

1. Installation position

(1) The output shaft is facing upward for the standard version.

(However, for sizes 063 to110, you can choose 1 of the 6 installation orientations with custom order.)

Position 1

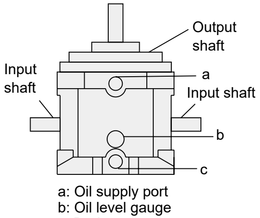

a: Oil supply port
b: Oil level gauge
c: Drain port

2. Housing material/Fc

3. Diameter of the stepped section of the input shaft and the fixed shaft (output side)

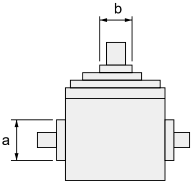

Dimensions / Size	a	b
063	ø 17	ø 22
080	ø 25	ø 38
110	ø 28	ø 60
140	ø 32	No stepping section
180	ø 42	No stepping section
250	ø 55	No stepping section

4. Output shaft (flange shaft) positioning pin hole dimensions (custom order)

Size	063	080	110	140
Pitch	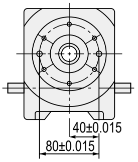	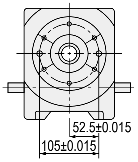	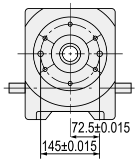	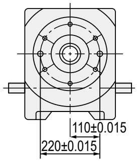
Standard hole diameter	2-ø8H7 depth 12	2-ø8H7 depth 12	2-ø10H7 depth 15	2-ø13H7 depth 20

Size	180	250
Pitch	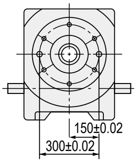	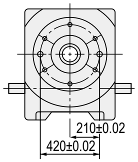
Standard hole diameter	2-ø16H7 depth 25	2-ø20H7 depth 30

5. Housing dowel pin hole dimensions (custom order)

When housing positioning pin holes are to be added, the dimensions should be as below.

Size	063	080	110
Bottom face	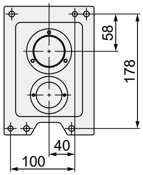	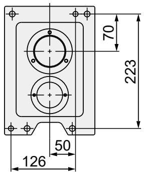	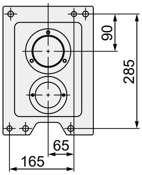
Standard hole diameter	2-ø8H7 depth 12	2-ø8H7 depth 12	2-ø10H7 depth 15
Size	140	180	250
Bottom face	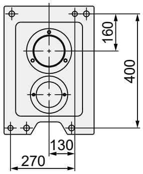	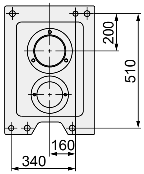	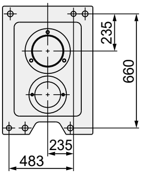
Standard hole diameter	2-ø13H7 depth 20	2-ø16H7 depth 25	2-ø20H7 depth 30

* For the tolerance of positioning pins, contact CKD.

6. Optional worm reducer

List of standard mounting worm reducers

Main model No.		HO reducer Size	Reduction ratio Value in ( ) represents the special reduction ratio.	TE reducer side	Reduction ratio
RGIT **RGCT**	**063**	HO 32	1/20, 1/40, 1/60 (1/30, 1/50)	TE 35	1/10, 1/20, 1/30 1/40, 1/50, 1/60
	080	HO 40	1/20, 1/40, 1/60 (1/30, 1/50)	TE 42	1/10, 1/20, 1/30 1/40, 1/50, 1/60
	110	HO 50	1/20, 1/30, 1/40 1/50, 1/60	TE 51	1/10, 1/20, 1/30 1/40, 1/50, 1/60
	140	HO 60	1/20, 1/30, 1/40 1/50, 1/60	TE 63	1/10, 1/20, 1/30 1/40, 1/50, 1/60
	180	HO 80	1/20, 1/30, 1/40 1/50, 1/60	TE 80	1/10, 1/20, 1/30 1/40, 1/50, 1/60
	250	HO100	1/20, 1/30, 1/40 1/50, 1/60	TE100	1/10, 1/20, 1/30 1/40, 1/50, 1/60

* The above indicates the combinations of standard installations.
Check the reducer load torque (Ter) and the reducer rated output torque before use.

7. Option/Input shaft - with rotation detection cam + proximity switch

Proximity switch model No.

Body shaft inteval	SW model No.	Manufacturer
063 to **110**	E2S-Q23	OMRON
140 to **250**	E2E-X2E1	

8. Optional torque saver (TST6 to TST11) + release detection proximity switch

Proximity switch model No.

SW model No.	Manufacturer
E2S-Q23	OMRON

Roller gear cam drive

Table type

1. Standard model No. Index series

RGIT	080	–	004	270	S	1	F	1
Ⓐ	Ⓑ		Ⓒ	Ⓓ	Ⓔ	Ⓕ	Ⓖ	Ⓗ

Ⓐ Model	Ⓑ Shaft interval		Ⓒ Index number (n)		Ⓓ Total index angle (θt)		Ⓔ Cam curve		Ⓕ Cam helix direction/dwell No.	
RGIT	063	63 mm	003	3	090	90°	S	MS curve (Standard)	1	Left helix/1 dwell
	080	80 mm	004	4	120	120°			2	Left helix/2 dwell
	110	110 mm	005	5	150	150°	C	MC curve (MCV50)	3	Left helix/3 dwell
	140	140 mm	006	6	180	180°	T	MT curve	4	Left helix/4 dwell
	180	180 mm	008	8	210	210°				
	250	250 mm	009	9	240	240°			5	Right helix/1 dwell
			010	10	270	270°			6	Right helix/2 dwell
			012	12	300	300°			7	Right helix/3 dwell
			015	15	330	330°			8	Right helix/4 dwell
			016	16						
			018	18						
			020	20						
			024	24						
			030	30						
			032	32						
			036	36						
			040	40						
			048	48						

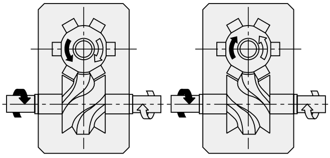

Left helix (Standard) Right helix

For details of the timing chart, refer to B-7.

Example of model No. (1)

RGIT250-003330S5F1

Shaft interval ....250 mm
Index number 3
Total index angle ....300°
Cam curve ....MS curve
Cam helix direction/dwell No. ....Right helix/1 dwell
Shape of the output shaft ....Flange
Installation position.................................Position #1

Ⓖ Shape of the output shaft		Ⓗ Installation position			
F	Flange	1 2 3 4 5 6	Position #1 Position #2 Position #3 Position #4 Position #5 Position #6 * For the models whose shaft interval 140 mm or greater, only Position #1 is available.	■Position #1 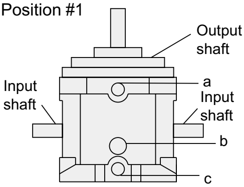	■Position #2 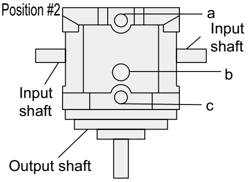
				■Position #3 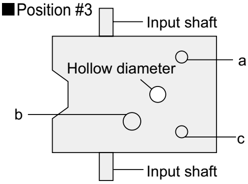	■Position #4 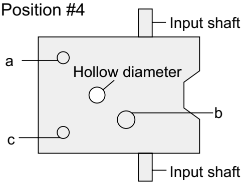
				■Position #5 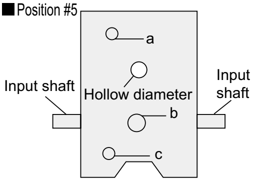	■Position #6 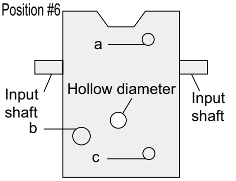

a: Oil supply port　b: Oil level gauge　c: Drain port

Roller gear cam drive

Table type

2-1. Model No. with options

Common for Index and Reducer series

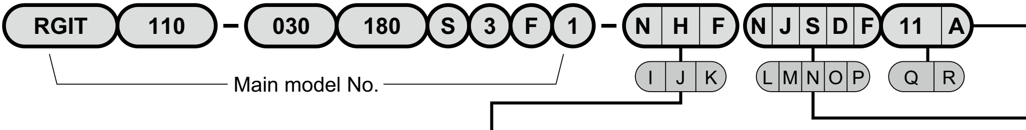

Input/Output shaft specification code					
Ⓘ Input shaft specification code (left shaft)		Ⓙ Input shaft specification code (right shaft)		Ⓚ Output shaft specification code	
N	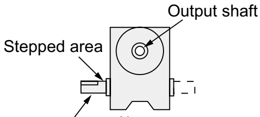 N□□	N	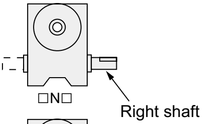 □N□	N	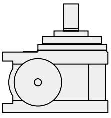 □□N
K	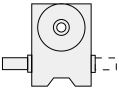 K□□	K	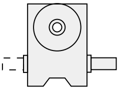 □K□		
C	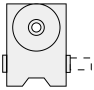 C□□	C	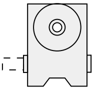 □C□	F	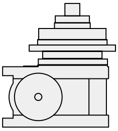 □□F
J	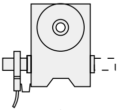 J□□ (Proximity switch)	J	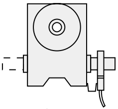 □J□ (Proximity switch)	S	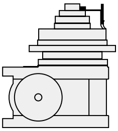 Note 2 □□S
H	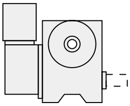 H□□	H	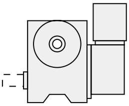 □H□		
W E	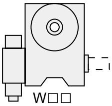 W□□ E□□	W E	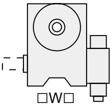 □W□ □E□		
N K C J H W E	Standard (with keyway) No keyway Cutoff * This is cut off at the stepped spot. It will protrude from the housing. Verify the dimensions with the diagram. Input shaft - with rotation detection cam + proximity switch (1 station) * Double or higher are custom order items. (When the input shaft is rotated in both directions, double may be required.) * Those with 3 or more dwell points are custom order items. * The proximity switch detects 2 spots for the 2 dwell setup. With the hollow shaft geared motor * Since the specification for the motor is required, determine "Hollow shaft geared motor installation specification code." With the worm reducer (W: HO reducer, E: TE reducer) * Since the specification for the worm reducer is required, determine "Worm reducer installation specification code."			N F S	Standard With Torque saver (TST) With Torque saver (TST) + proximity switch for release detection When F or S is selected Since the specification for a torque saver is required, determine "Torque saver installation specification code."

▼ When a torque saver is installed

(Refer to next page)

▼ Installation specification code of the hollow shaft geared motor

* Refer to pages D-621 to D-624.

Ⓛ Motor type		Ⓜ Motor output		Application index size	Ⓝ Rated voltage		Ⓞ Reduction ratio	Ⓟ Driving method	
G	Hypoid gear	G	0.1 kW	63	S	Three-phase 200 V	For the reducer codes, refer to the following table	F	Face mount
		H	0.2 kW						
		H	0.2 kW	80					
		J	0.4 kW						
		J	0.4 kW	110					
		K	0.75 kW						
		K	0.75 kW	140					
		L	1.5 kW						
		L	1.5 kW	180					
T		M	2.2 kW						
S	Helical worm gear	M	2.2 kW	250					
		N	3.7 kW						

Ⓛ G:Nissei T:Tsubaki Emerson S:SEW

▼ Table of the combinations of motor output and reduction ratio

Ⓜ Motor output			Ⓞ Reduction ratio											
		Size	A	B	C	D	E	F	G	H	J	K	L	M
G	0.1 kW	63	–	–	1/20	1/25	1/30	1/40	1/50	1/60				
H	0.2 kW		1/10	1/15	1/20	1/25	1/30	1/40	1/50	1/60				
H	0.2 kW	80	–	–	1/20	1/25	1/30	1/40	1/50	1/60				
J	0.4 kW		1/10	1/15	1/20	1/25	1/30	1/40	1/50	1/60				
J	0.4 kW	110	–	–	1/20	1/25	1/30	1/40	1/50	1/60				
K	0.75 kW		1/10	1/15	1/20	1/25	1/30	1/40	1/50	1/60				
K	0.75 kW	140	–	–	1/20	1/25	1/30	1/40	1/50	1/60				
L	1.5 kW		1/10	1/15	1/20	1/25	1/30	1/40	1/50	1/60				
L	1.5 kW	180	–	–	1/20	1/25	1/30	1/40	1/50	1/60				
M	2.2 kW		1/10	1/15	1/20	1/25	1/30	1/40	1/49.286	1/60				
M	2.2 kW	250	1/20.37	1/23.33	1/26.93	1/29.63	1/34.80	1/36.85	1/41.89	1/46.40				
N	3.7 kW		1/12.07	1/15.28	1/20.99	1/25.07	1/28.41	1/32.38	1/35.94	1/41.07	1/43.33	1/49.38	1/53.87	1/56.92

* The above indicates the combinations of standard installations.

Use this after verifying the motor capacity (Pe), the allowable output shaft torque (Trr), the load torque of the geared motor (Ter).

▼ When a worm reducer is installed

(Refer to next page)

Roller gear cam drive

Table type

2-1. Model No. with options

Common for Index and Reducer series

RGIT **110** – **030** **180** **S** **3** **F** **1** – **N** **W** **F** **0** **5** **6** **Y** **G** **11** **A**

Main model No.

I J K   L M N O P   Q R

▼ When a worm reducer is installed

Ⓛ Ⓜ Ⓝ Ⓞ Ⓟ Worm reducer installation specification code

Ⓛ Ⓜ Reducer size			Ⓝ Reduction ratio		Ⓞ Clutch/Brake:	
03	HO32,	TE35	1	1/10 (TE reducer only)	Y	Clutch/Brake: Yes
04	HO40,	TE42	2	1/20		
05	HO50,	TE51	3	1/30		
06	HO60,	TE63	4	1/40	N	Clutch/Brake: No
08	HO80,	TE80	5	1/50		
10	HO100,	TE100	6	1/60		
	* Refer to D-551 to 588.			* Those of 1/30 and 1/50 for HO32 and HO40 have special ratio. Verify the delivery schedule.		

Ⓟ Mounting direction ■ is the reducer input shaft (clutch side)

Left shaft installation	A 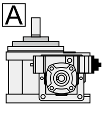	B 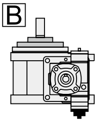	C 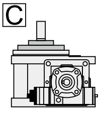	D 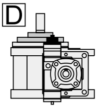
	J 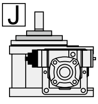 AR	K 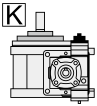 BR	L 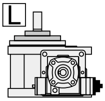 CR	M 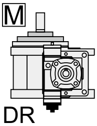 DR
Right shaft installation	E 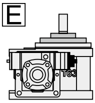	F 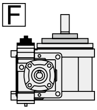	G 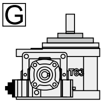	H 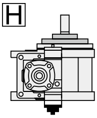
	N 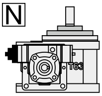 ER	P 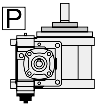 FR	Q 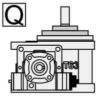 GR	R 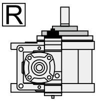 HR

▼ When a torque saver is installed

Ⓠ Ⓡ Torque saver mounting specification code				Application index size
Ⓠ TSF size		Ⓡ Release torque range		
06	TST6	A B	A B	063
08	TST8			080
11	TST11			110

* When neither the worm reducer nor the hollow shaft geared motor cannot be installed while a torque saver is installed, insert a hyphen "-" after Ⓛ and then add a torque saver installation specification code after this. Example: RGIT110-030180S3F1-NNF-11A

* When you specify the release torque of a torque saver, notify CKD of the value. Otherwise, the product will be shipped adjusted at the min. value within the adjusting range. (Refer to D-589 to 610.)

* The proximity switch for release detection of a torque saver/guard is the NO type. NC type is also available.

Note for selecting a torque saver

Depending on the presence of a torque saver, the dimension A varies.

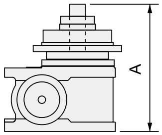

Model number	Torque saver	
	No	Yes
RGIT063	210	255
RGIT080	260	295
RGIT110	340	

Table type

2-2. Examples of model numbers with options / 3. Custom specification model No.

When you place an order with a model number, ensure that it exactly matches what you order. Even if 1 letter is incorrectly written, the product will be different with different specifications.
In order for us to deliver what you really want, carefully determine the model number referring to the following examples.

Example of model No. (2)

RGIT140-048120S2F1-NJN
Input shaft specification
  Left shaft: Standard
  Right shaft: Input shaft - with rotation detection cam + proximity switch (1 station)
Output shaft specification
  Standard

Example of model No. (3)

RGIT180-008270S1F1-WNN084YL
Input shaft specification
  Left shaft: Worm reducer installed
  Right shaft: Standard
Output shaft specification: Standard

Worm reducer installation specification
  Reducer size: HO80
  Reduction ratio: 1/40
  Clutch/Brake: Yes
  Mounting direction: L

● Special specification model number

Common for Index and Reducer series

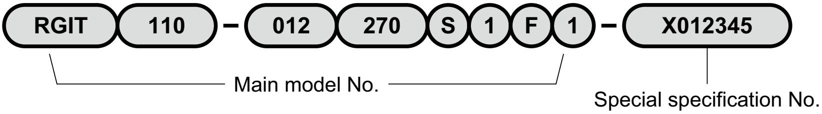

* Add "-X (6 digit number)" after the main model No. as the special specification number.
The special specification model number shall be determined after a consultation with the customer.
Options other than the standard are available upon request. Please provide us with the specifications.
* High speed specifications (input shaft rotational speed of 200 rpm or higher) are deemed to be special specifications.

Roller gear cam drive

Table type

1. Standard model No. Reducer series

RGCT 180 – 008 360 R L F 1

Ⓐ Ⓑ Ⓒ Ⓓ Ⓔ Ⓕ Ⓖ Ⓗ

Ⓐ Model	Ⓑ Distance between shafts		Ⓒ Reduction ratio (id)		Ⓓ Total index angle (θt)		Ⓔ Cam curve		Ⓕ Cam helix direction/dwell No.	
RGCT	063	63 mm	004	1/4	360	360°	R	Constant velocity rotation Curve	L	Left helix
	080	80 mm	005	1/5					R	Right helix
	110	110 mm	006	1/6						
	140	140 mm	008	1/8						
	180	180 mm	009	1/9						
	250	250 mm	010	1/10						
			012	1/12						

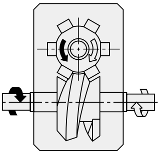

Left helix
(Standard)

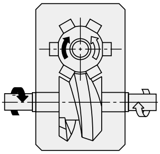

Right helix

For details of the timing chart, refer to B-7.

Example of model No. (1)

RGCT063-005360RLF1

Shaft interval .... 63 mm
Reduction ratio 1/5
Total index angle .... 360°
Cam curve .... Constant velocity rotation curve
Spiral direction of the cam .... Left helix
Shape of the output shaft .... Flange
Installation position .... Position #1

	Ⓖ Shape of the output shaft		Ⓗ Installation position	
	F	Flange	1	Position #1
			2	Position #2
			3	Position #3
			4	Position #4
			5	Position #5
			6	Position #6
				* For the models whose Shaft interval is 140 mm or greater, only Position #1 is available.

■Position #1

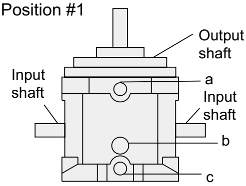

■Position #2

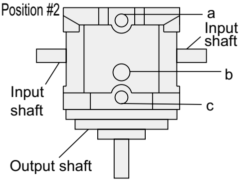

■Position #3

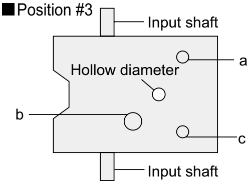

■Position #4

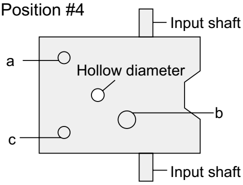

■Position #5

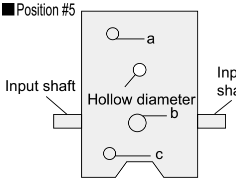

■Position #6

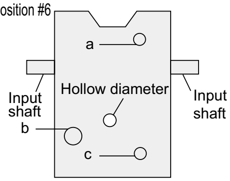

a: Oil supply port b: Oil level gauge c: Drain port

Difference between shafts: 63 mm

Table type

Index	RG I T 063
Reducer	RGCT 063

● Standard specifications

Dimensions

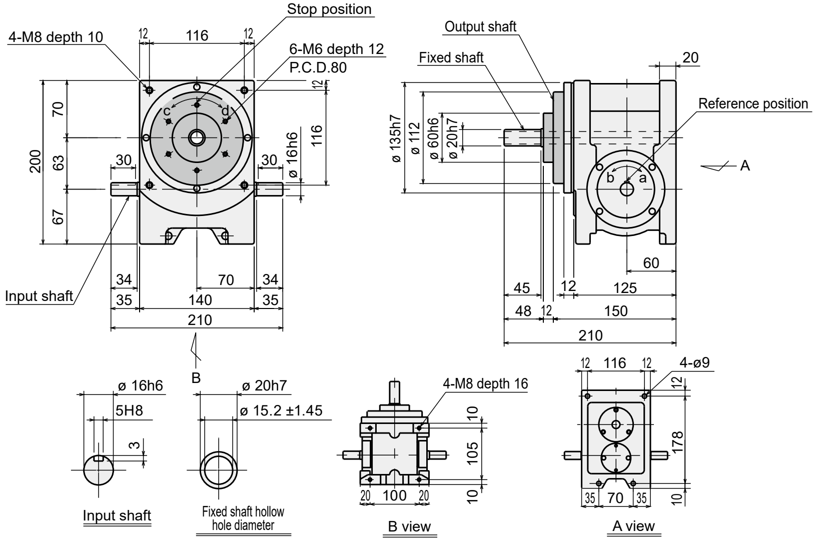

Hole is not polished (steel pipe used).

RG I T 063-☐☐☐☐F☐
RGCT 063

Installation position and oil supply/drain port and oil level gauge positions

- Oil fill/drain port (Rc$^{1}/_{4}$)

○ Oil level gauge (ø 20)

Installation position	1	2	3
Series	**RGIT/RGCT**	**RGIT/RGCT**	**RGIT/RGCT**
Dimensions	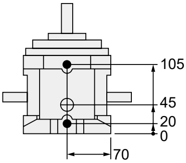	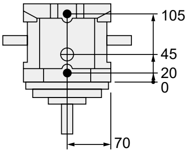	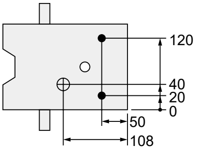

Installation position	4	5	6
Series	**RGIT/RGCT**	**RGIT/RGCT**	**RGIT/RGCT**
Dimensions	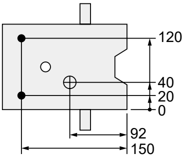	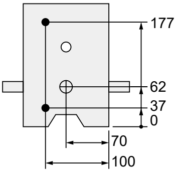	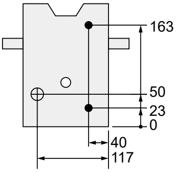

Characteristics

Descriptions	Unit	Characteristics	
		Output shaft	Input shaft
Allowable thrust force	N	2600	1200
Allowable radial force	N	1200	750
Allowable bending moment	N·m	40	-
Moment of inertia	kg·m^2	3.32 × 10^{-3}	2.39 × 10^{-4}

Descriptions	Unit	Characteristics
Internal frictional torque (Tin)	N·m	2.9
Product weight	kg	17
Oil level	ℓ	0.3
Paint color		Silver

Accuracy

	Accuracy (sec.)	
Indexing accuracy	1 dwell	±30
	2 dwell	±90
	3 dwell	±135
	4 dwell	±180
Repeatability		15

* For the dwell accuracy, please contact CKD.

List of index angles

Index series **RGIT 063** Cam curve/MS

	Total index angle (θt) / Index number (n)	90	120	150	180	210	240	270	300	330
1 dwell	3						○	○	○	○
	4				○	○	○	○	○	○
	5			○	○	○	○	○	○	○
	6		○	○	○	○	○	○	○	○
	8	○	○	○	○	○	○	○	○	○
	9	○	○	○	○	○	○	○	○	○
	10	○	○	○	○	○	○	○	○	○
	12	○	○	○	○	○	○	○	○	○
	15	○	○	○	○	○	○	○	○	○
	16	○	○	○	○	○	○	○	○	○
2 dwell	16			○	○	○	○	○	○	○
	18		○	○	○	○	○	○	○	○
	20		○	○	○	○	○	○	○	○
	24	○	○	○	○	○	○	○	○	○
	30	○	○	○	○	○	○	○	○	○
	32	○	○	○	○	○	○	○	○	○
3 dwell	24				○	○	○	○	○	○
	30			○	○	○	○	○	○	○
	36		○	○	○	○	○	○	○	○
	48	○	○	○	○	○	○	○	○	○
4 dwell	32					○	○	○	○	○
	36				○	○	○	○	○	○
	40				○	○	○	○	○	○
	48			○	○	○	○	○	○	○

Reducer series **RGCT 063**

Total index angle (θt) / Reduction ratio (id)	360
1/4	○
1/5	○
1/6	○
1/8	○
1/9	○
1/10	○
1/12	○

Dimensions with options

With worm reducer (with HO32-C/B)

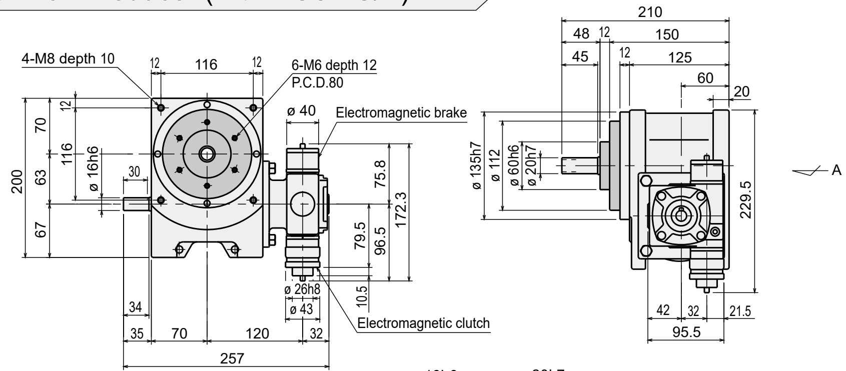

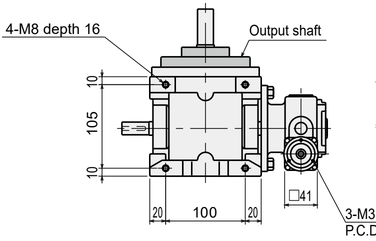

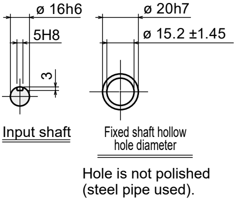

Hole is not polished (steel pipe used).

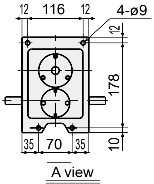

A view

RG I T 063-☐☐☐☐☐☐☐☐F☐-NWN03☐YG
RGCT 063

With worm reducer (without HO32-C/B)

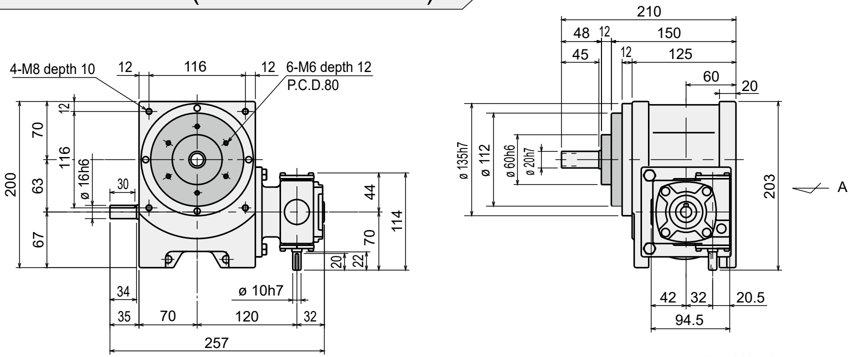

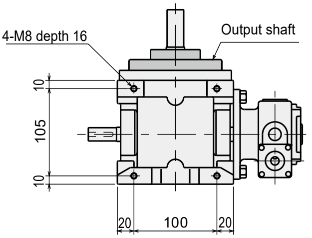

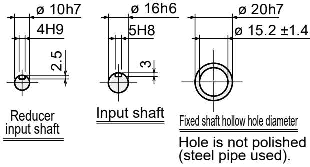

Hole is not polished (steel pipe used).

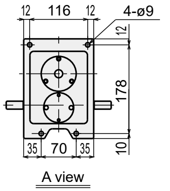

A view

RG I T 063-☐☐☐☐☐☐☐☐F☐-NWN03☐NG
RGCT 063

With Torque saver (TST6)

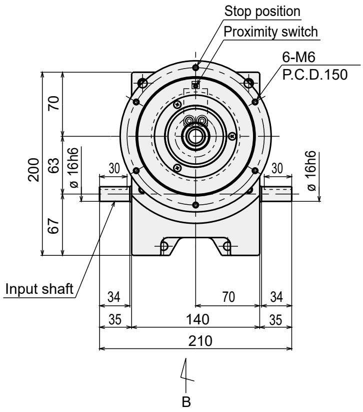

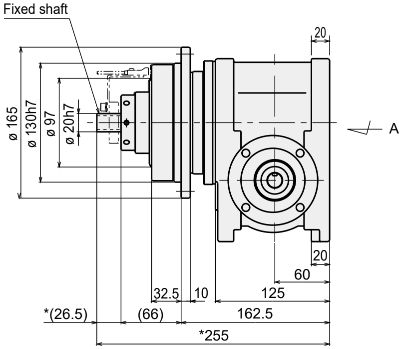

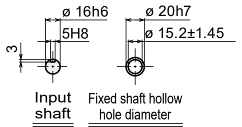

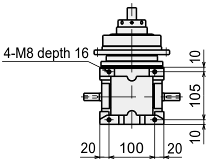

B view

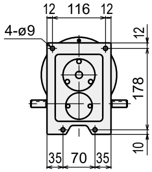

A view

Dimensions marked with an asterisk (*) are different from index drive standard unit specifications.

RG I T 063-☐☐☐☐ F ☐ -NNF-06 ☐
RGCT 063

Dimensions with options

CAD

With the hollow shaft geared motor (0.1 kW)

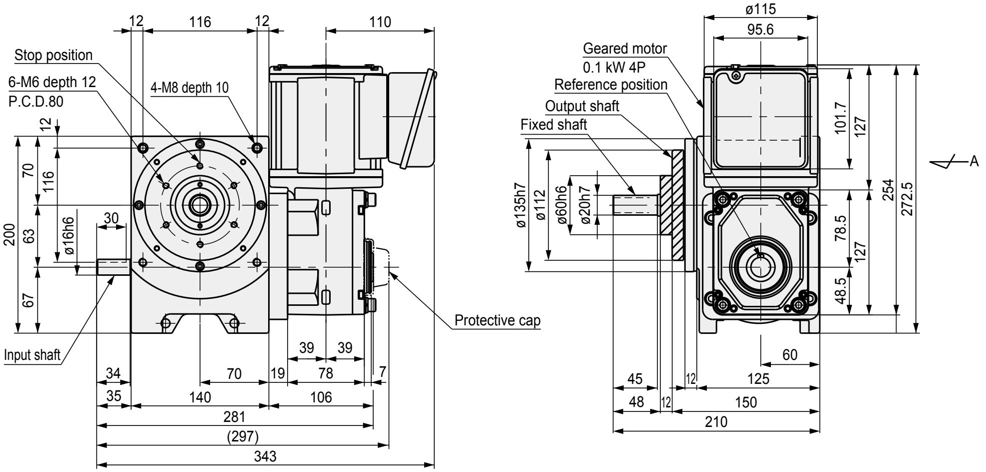

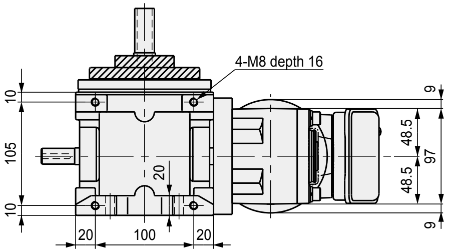

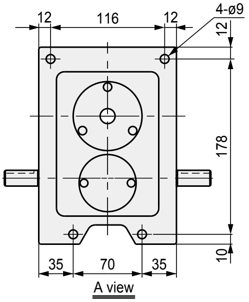

A view

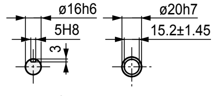

Input shaft

Fixed shaft hollow hole diameter
Hole is not polished
(steel pipe used).

RG I T 063-☐☐☐☐☐☐☐☐ F ☐ -NHNGGS ☐ F
RGCT 063

With the hollow shaft geared motor (0.2 kW)

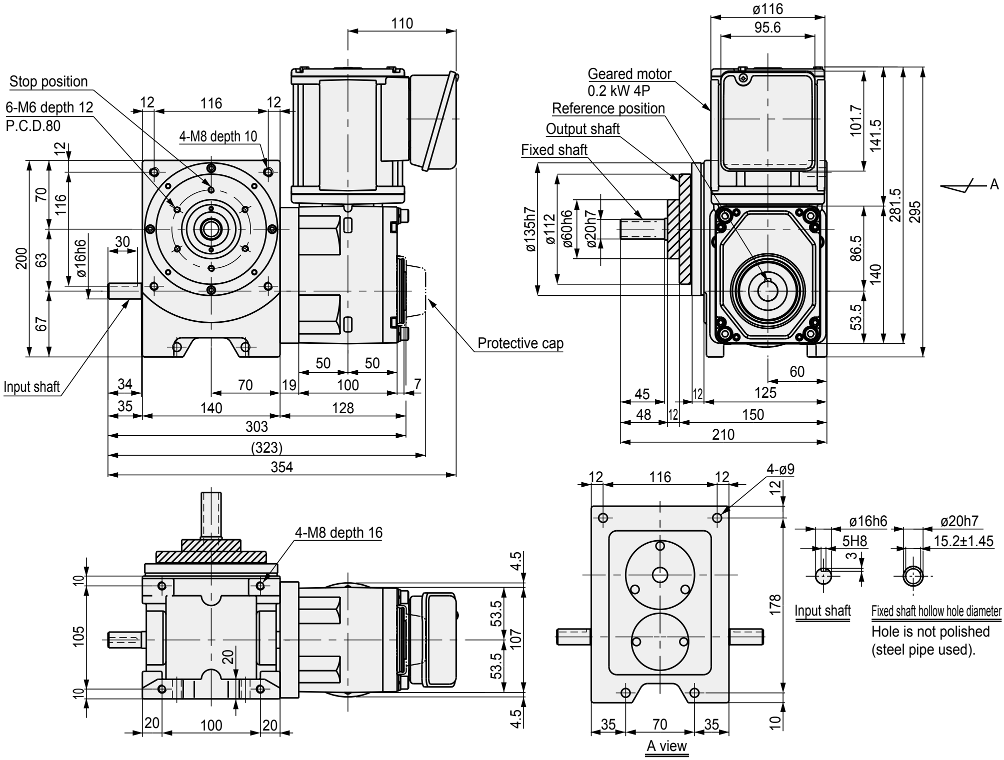

RG I T 063-☐☐☐☐☐☐☐☐ F ☐ -NHNGHS ☐ F
RGCT 063

Index	RG I T 080
Reducer	RGCT 080

Table type

● Standard specifications

Dimensions

CAD

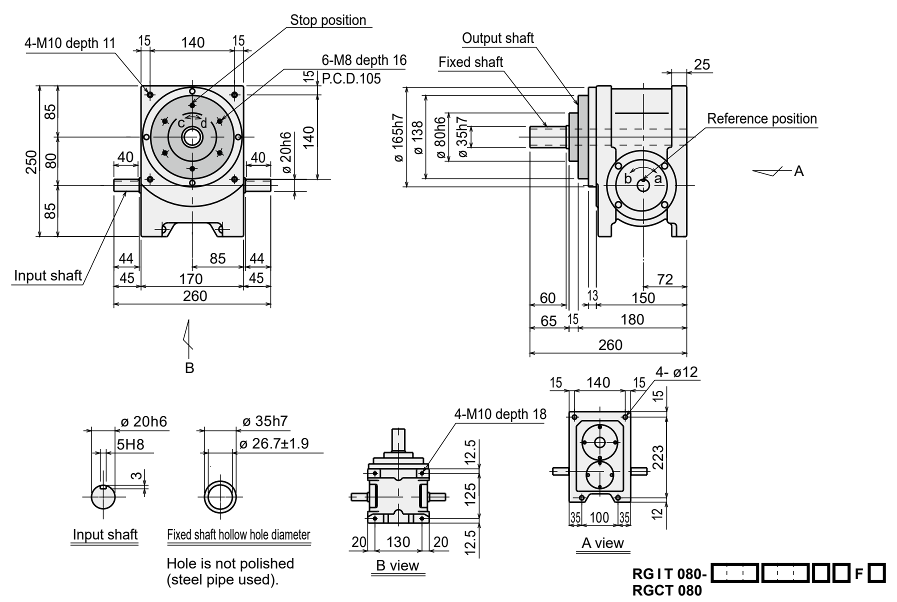

Installation position and oil supply/drain port and oil level gauge positions

- • Oil fill/drain port ($Rc^{3}/_{8}$)
- ○ Oil level gauge (ø 25)

Installation position	1	2	3
Series	**RGIT/RGCT**	**RGIT/RGCT**	**RGIT/RGCT**
Dimensions	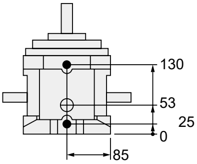	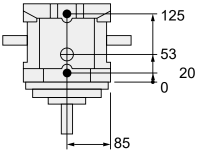	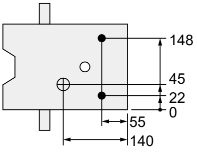

Installation position	4	5	6
Series	**RGIT/RGCT**	**RGIT/RGCT**	**RGIT/RGCT**
Dimensions	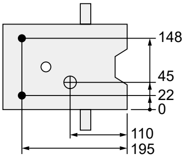	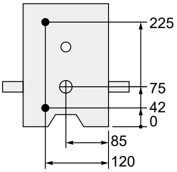	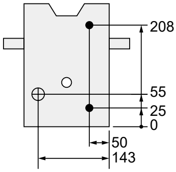

Characteristics

Descriptions	Unit	Characteristics	
		Output shaft	Input shaft
Allowable thrust force	N	5000	2200
Allowable radial force	N	2500	1700
Allowable bending moment	N·m	85	-
Moment of inertia	$kg{\cdot}m^2$	1.05×10^{-2}	6.35×10^{-4}

Descriptions	Unit	Characteristics
Internal frictional torque (Tin)	N·m	4.7
Product weight	kg	29
Oil level	ℓ	0.6
Paint color		Silver

Accuracy

	Accuracy (sec.)	
Indexing accuracy	1 dwell	±30
	2 dwell	±60
	3 dwell	±90
	4 dwell	±120
Repeatability		15

* For the dwell accuracy, please contact CKD.

List of index angles

Index series **RGIT 080** Cam curve/MS

	Total index angle (θt) Index number (n)	90	120	150	180	210	240	270	300	330
1 dwell	3						○	○	○	○
	4				○	○	○	○	○	○
	5			○	○	○	○	○	○	○
	6		○	○	○	○	○	○	○	○
	8	○	○	○	○	○	○	○	○	○
	9	○	○	○	○	○	○	○	○	○
	10	○	○	○	○	○	○	○	○	○
	12	○	○	○	○	○	○	○	○	○
	15	○	○	○	○	○	○	○	○	○
	16	○	○	○	○	○	○	○	○	○
	18	○	○	○	○	○	○	○	○	○
	20	○	○	○	○	○	○	○	○	○
2 dwell	16			○	○	○	○	○	○	○
	18			○	○	○	○	○	○	○
	20		○	○	○	○	○	○	○	○
	24		○	○	○	○	○	○	○	○
	30	○	○	○	○	○	○	○	○	○
	32	○	○	○	○	○	○	○	○	○
	36	○	○	○	○	○	○	○	○	○
	40	○	○	○	○	○	○	○	○	○
3 dwell	24				○	○	○	○	○	○
	30			○	○	○	○	○	○	○
	36		○	○	○	○	○	○	○	○
	48	○	○	○	○	○	○	○	○	○
4 dwell	32						○	○	○	○
	36					○	○	○	○	○
	40				○	○	○	○	○	○
	48			○	○	○	○	○	○	○

Reducer series **RGCT 080**

Total index angle (θt) Reduction ratio (id)	360
1/4	○
1/5	○
1/6	○
1/8	○
1/9	○
1/10	○
1/12	○

● Dimensions with options

With worm reducer (with HO40-C/B)

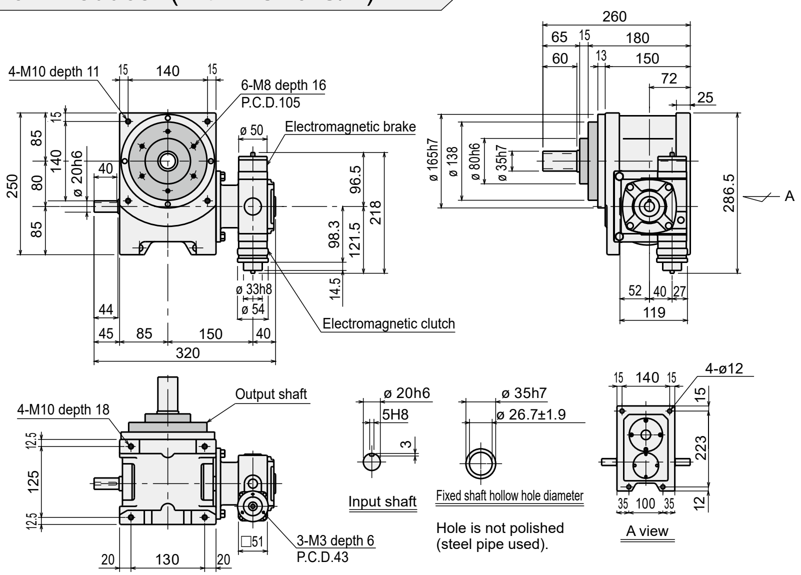

RG I T 080-☐☐☐☐☐☐☐☐ F ☐ -NWN04 ☐ YG
RGCT 080

With worm reducer (without HO40-C/B)

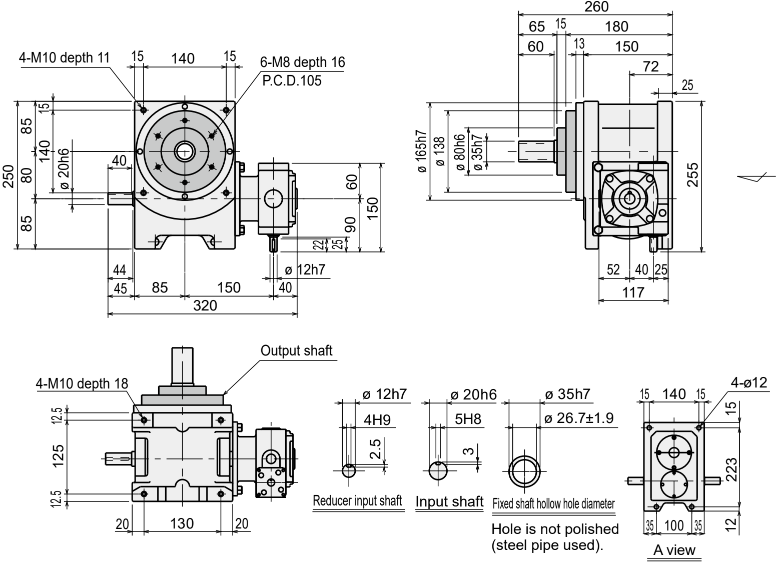

RG I T 080-☐☐☐☐☐☐☐☐ F ☐ -NWN04 ☐ NG
RGCT 080

With Torque saver (TST8)

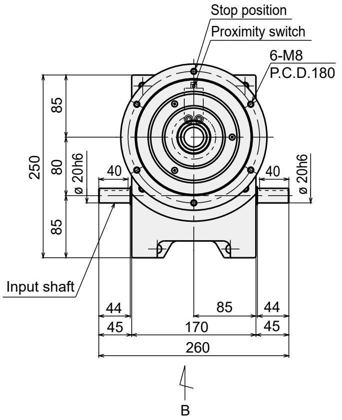

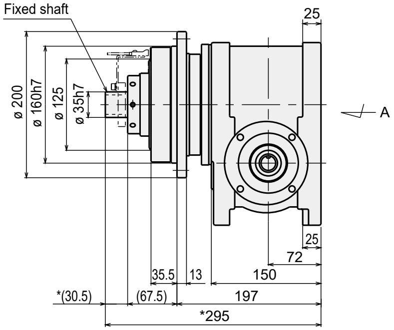

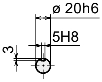

Input shaft

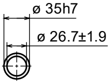

Fixed shaft hollow hole diameter

Dimensions marked with an asterisk (*) are different from index drive standard unit specifications.

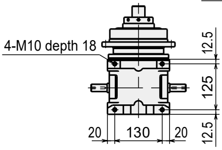

B view

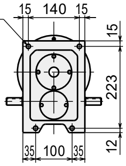

A view

RG I T 080-☐☐☐☐☐☐☐☐ F ☐ -NNF-08 ☐
RGCT 080

Dimensions with options

With the hollow shaft geared motor (0.2 kW)

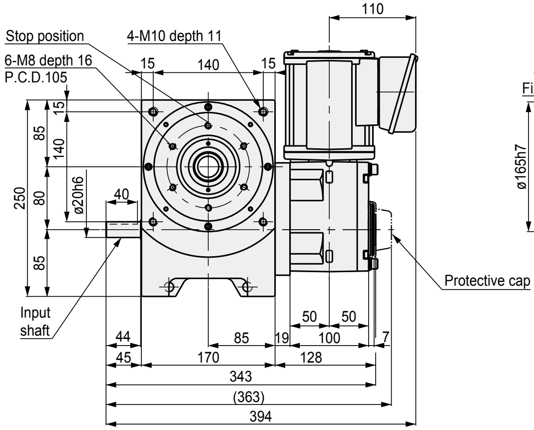

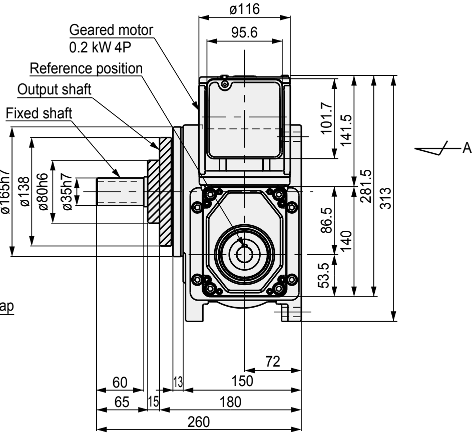

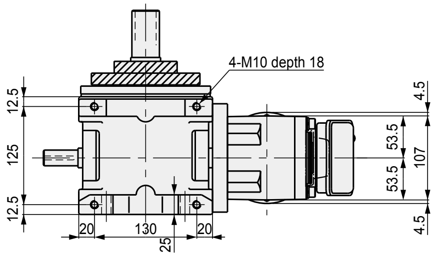

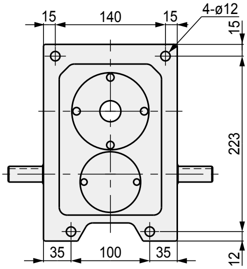

A view

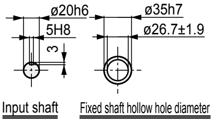

Hole is not polished (steel pipe used).

*The motor may protrude from the housing end (B part).

RG I T 080-☐☐☐☐F☐-NHNGHS☐F
RGCT 080

With the hollow shaft geared motor (0.4 kW)

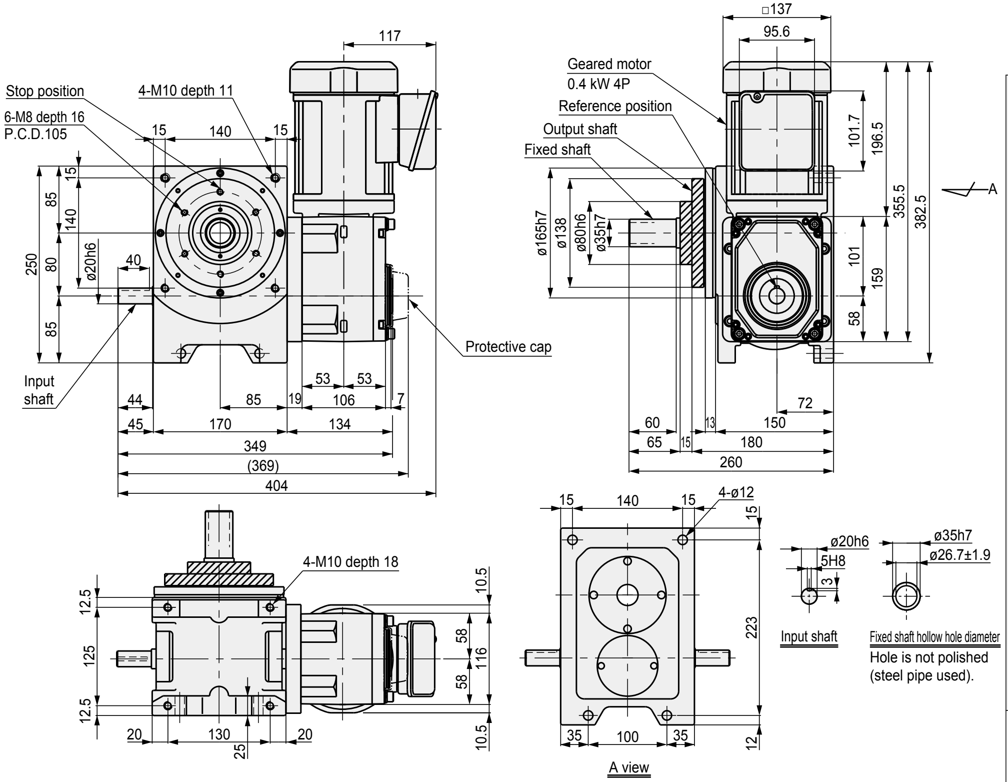

RG I T 080-☐☐☐☐F☐-NHNGJS☐F
RGCT 080

Difference between shafts: **110** mm

Table type

Index	**RGIT 110**
Reducer	**RGCT 110**

● Standard specifications

Dimensions

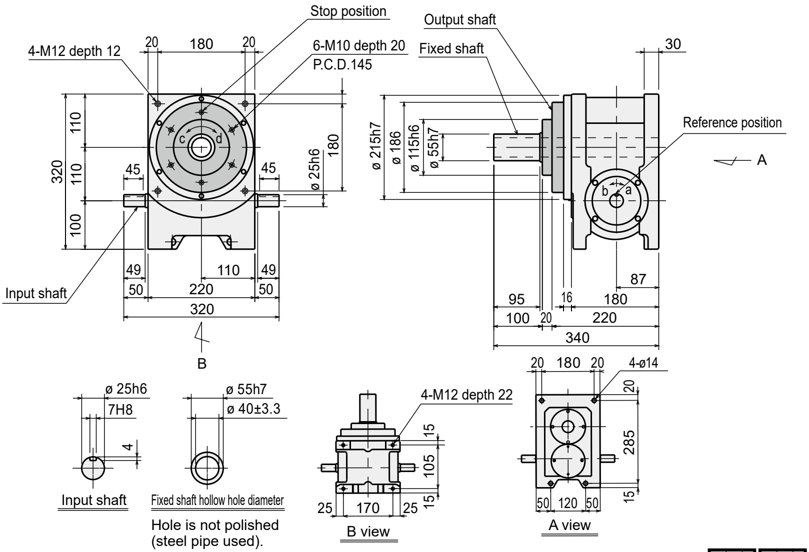

RGIT 110-☐☐☐☐**F**☐
RGCT 110

Installation position and oil supply/drain port and oil level gauge positions

- Oil fill/drain port (Rc$^{3}/_{8}$)

○ Oil level gauge (ø 25)

Installation position	1	2	3
Series	**RGIT/RGCT**	**RGIT/RGCT**	**RGIT/RGCT**
Dimensions	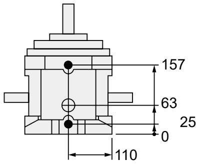	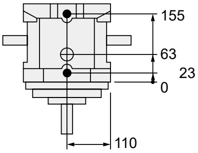	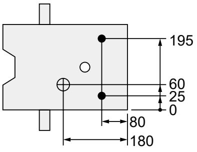

Installation position	4	5	6
Series	**RGIT/RGCT**	**RGIT/RGCT**	**RGIT/RGCT**
Dimensions	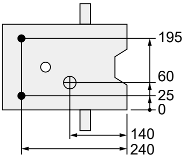	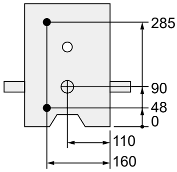	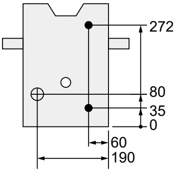

Characteristics

Descriptions	Unit	Characteristics	
		Output shaft	Input shaft
Allowable thrust force	N	10000	2900
Allowable radial force	N	4000	2600
Allowable bending moment	N·m	150	-
Moment of inertia	kg·m^2	4.70 × 10^{-2}	3.36 × 10^{-3}

Descriptions	Unit	Characteristics
Internal frictional torque (Tin)	N·m	8.8
Product weight	kg	57
Oil level	ℓ	1
Paint color		Silver

Accuracy

	Accuracy (sec.)	
Indexing accuracy	1 dwell	±20
	2 dwell	±40
	3 dwell	±60
	4 dwell	±80
Repeatability		15

* For the dwell accuracy, please contact CKD.

List of index angles

Index series **RGIT 110** Cam curve/MS

	Total index angle (θt) / Index number (n)	90	120	150	180	210	240	270	300	330
1 dwell	3							○	○	○
	4					○	○	○	○	○
	5			○	○	○	○	○	○	○
	6		○	○	○	○	○	○	○	○
	8		○	○	○	○	○	○	○	○
	9	○	○	○	○	○	○	○	○	○
	10	○	○	○	○	○	○	○	○	○
	12	○	○	○	○	○	○	○	○	○
	15	○	○	○	○	○	○	○	○	○
	16	○	○	○	○	○	○	○	○	○
	18	○	○	○	○	○	○	○	○	○
	20	○	○	○	○	○	○	○	○	○
	24	○	○	○	○	○	○	○	○	○
2 dwell	16			○	○	○	○	○	○	○
	18			○	○	○	○	○	○	○
	20		○	○	○	○	○	○	○	○
	24		○	○	○	○	○	○	○	○
	30	○	○	○	○	○	○	○	○	○
	32	○	○	○	○	○	○	○	○	○
	36	○	○	○	○	○	○	○	○	○
	40	○	○	○	○	○	○	○	○	○
	48	○	○	○	○	○	○	○	○	○
3 dwell	24				○	○	○	○	○	○
	30			○	○	○	○	○	○	○
	36		○	○	○	○	○	○	○	○
	48	○	○	○	○	○	○	○	○	○
4 dwell	32						○	○	○	○
	36					○	○	○	○	○
	40				○	○	○	○	○	○
	48			○	○	○	○	○	○	○

Reducer series **RGCT 110**

Total index angle (θt) / Reduction ratio (id)	360
1/4	○
1/5	○
1/6	○
1/8	○
1/9	○
1/10	○
1/12	○

Dimensions with options

With worm reducer (with HO50-C/B)

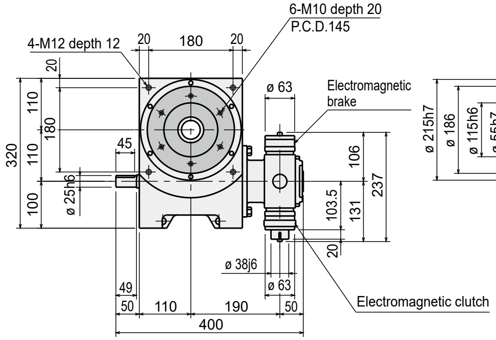

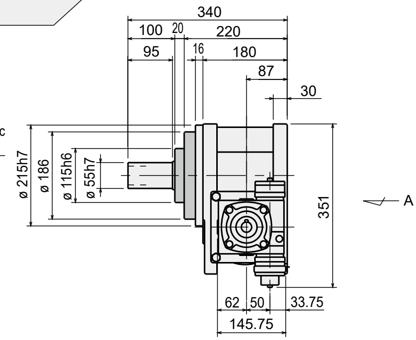

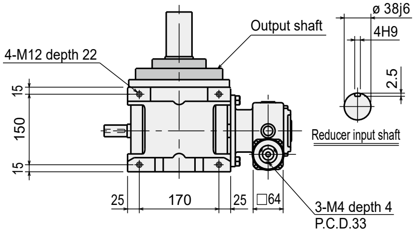

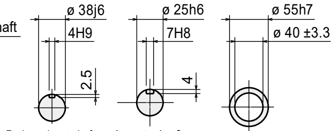

Reducer input shaft Input shaft Fixed shaft hollow hole diameter

Hole is not polished
(steel pipe used).

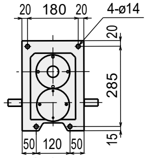

A view

RG I T 110-☐☐☐☐F☐-NWN05☐YG
RGCT 110

With worm reducer (without HO50-C/B)

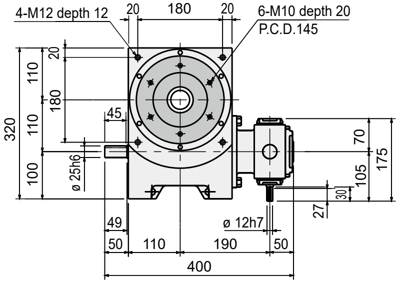

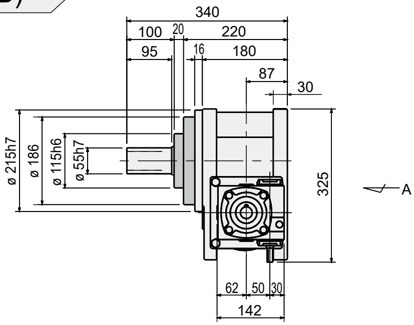

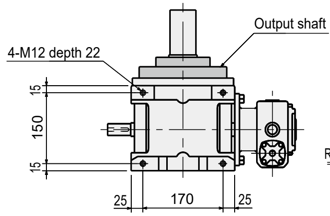

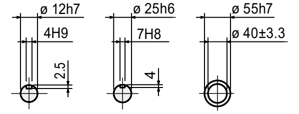

Reducer input shaft Input shaft Fixed shaft hollow hole diameter

Hole is not polished
(steel pipe used).

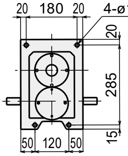

A view

RG I T 110-☐☐☐☐F☐-NWN05☐NG
RGCT 110

With Torque saver (TST11)

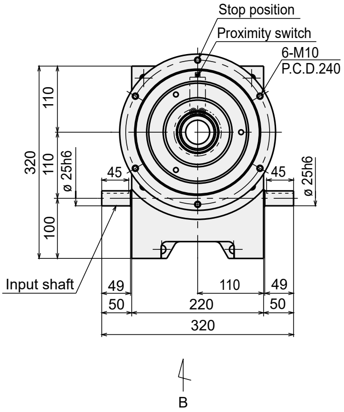

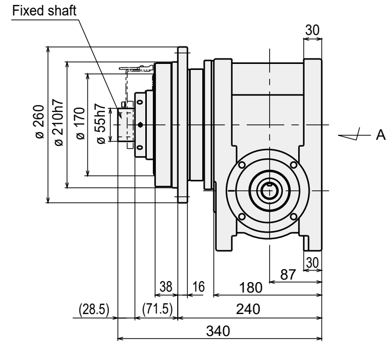

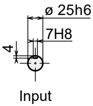

Input shaft

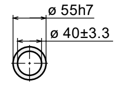

Fixed shaft hollow hole diameter

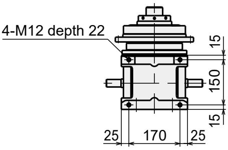

B view

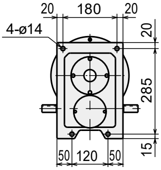

A view

RG I T 110-□□□□ F□ -NNF-11□
RGCT 110

Dimensions with options

CAD

With the hollow shaft geared motor (0.4 kW)

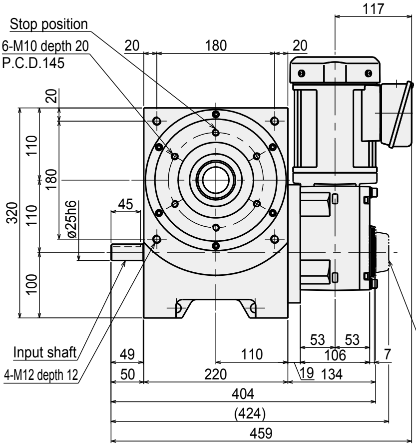

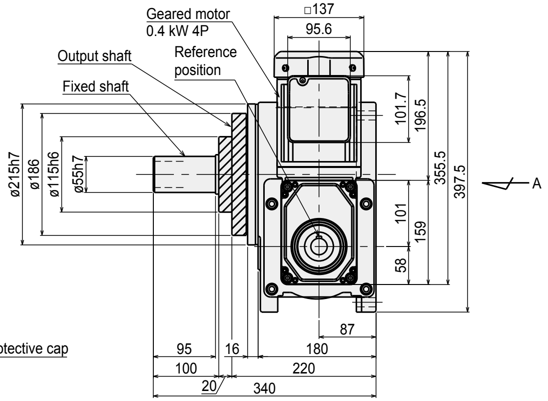

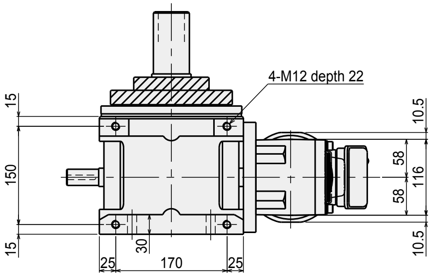

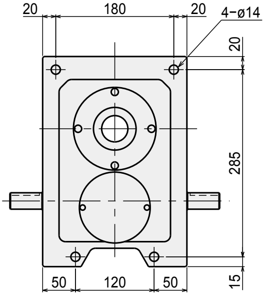

A view

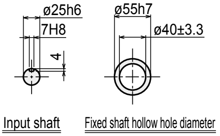

Hole is not polished (steel pipe used).

RG I T 110-☐☐☐☐F☐-NHNGJS☐F
RGCT 110

With the hollow shaft geared motor (0.75 kW)

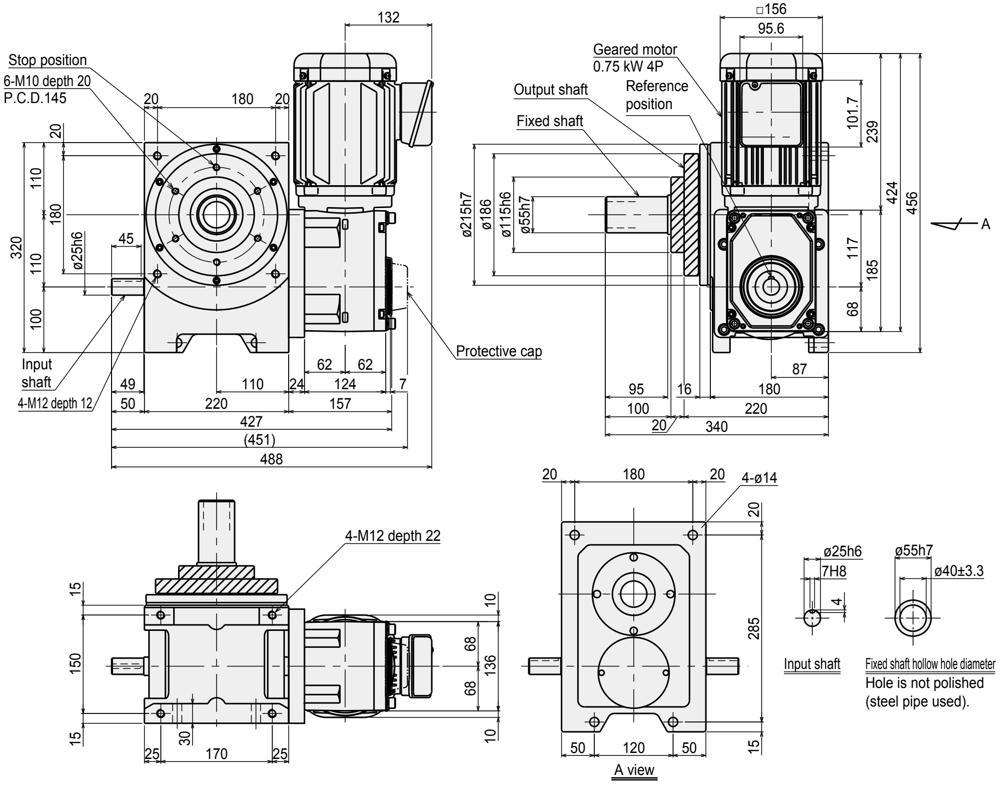

RG I T 110-☐☐☐☐ F ☐ –NHNGKS ☐ F
RGCT 110

Table type

Index	RG I T 140
Reducer	RGCT 140

● Standard specifications

Dimensions

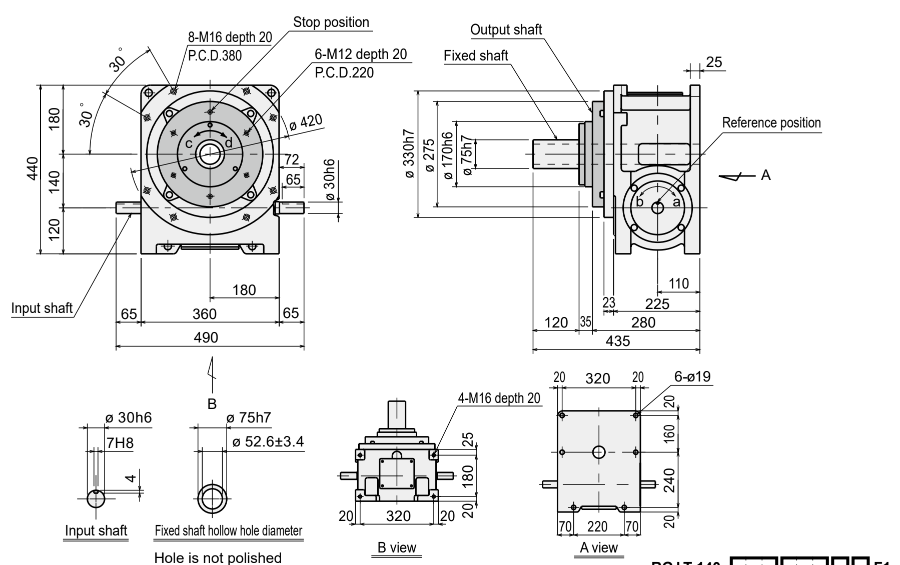

Hole is not polished
(steel pipe used).

RG I T 140-☐☐☐☐ **F1**
RGCT 140

Installation position and oil supply/drain port and oil level gauge positions

Installation position	1
Series	**RGIT/RGCT**
Dimensions	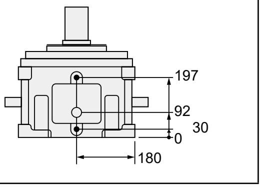

- Oil fill/drain port (Rc$^1/_2$)

○ Oil level gauge (ø 30)

Characteristics

Descriptions	Unit	Characteristics	
		Output shaft	Input shaft
Allowable thrust force	N	15000	4000
Allowable radial force	N	9000	4000
Allowable bending moment	N·m	500	-
Moment of inertia	kg·m^2	0.21	0.015

Descriptions	Unit	Characteristics
Internal frictional torque (Tin)	N·m	14
Product weight	kg	150
Oil level	ℓ	4
Paint color		Silver

Accuracy

Accuracy (sec.)		
Indexing accuracy	1 dwell	±20
	2 dwell	±40
	3 dwell	±60
	4 dwell	±80
Repeatability		15

* For the dwell accuracy, please contact CKD.

List of index angles

Index series **RGIT 140** Cam curve/MS

	Total index angle (θt) Index number (n)	90	120	150	180	210	240	270	300	330
1 dwell	3							○	○	○
	4					○	○	○	○	○
	5				○	○	○	○	○	○
	6			○	○	○	○	○	○	○
	8		○	○	○	○	○	○	○	○
	9		○	○	○	○	○	○	○	○
	10	○	○	○	○	○	○	○	○	○
	12	○	○	○	○	○	○	○	○	○
	15	○	○	○	○	○	○	○	○	○
	16	○	○	○	○	○	○	○	○	○
	18	○	○	○	○	○	○	○	○	○
	20	○	○	○	○	○	○	○	○	○
	24	○	○	○	○	○	○	○	○	○
2 dwell	16				○	○	○	○	○	○
	18			○	○	○	○	○	○	○
	20			○	○	○	○	○	○	○
	24		○	○	○	○	○	○	○	○
	30	○	○	○	○	○	○	○	○	○
	32	○	○	○	○	○	○	○	○	○
	36	○	○	○	○	○	○	○	○	○
	40	○	○	○	○	○	○	○	○	○
	48	○	○	○	○	○	○	○	○	○
3 dwell	24					○	○	○	○	○
	30			○	○	○	○	○	○	○
	36			○	○	○	○	○	○	○
	48	○	○	○	○	○	○	○	○	○
4 dwell	32						○	○	○	○
	36					○	○	○	○	○
	40				○	○	○	○	○	○
	48			○	○	○	○	○	○	○

Reducer series **RGCT 140**

Total index angle (θt) Reduction ratio (id)	360
1/4	○
1/5	○
1/6	○
1/8	○
1/9	○
1/10	○
1/12	○

● Dimensions with options

With worm reducer (with HO60-C/B)

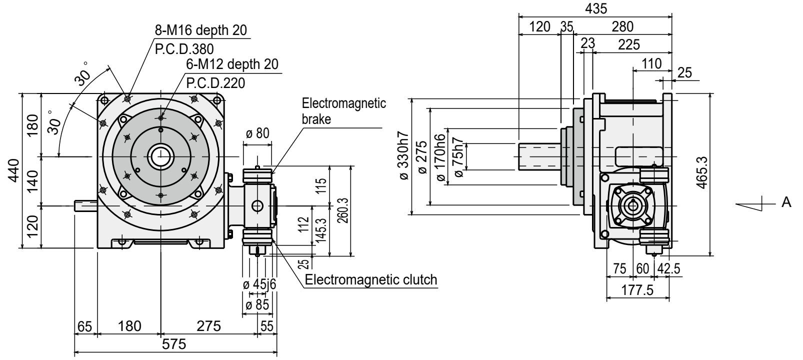

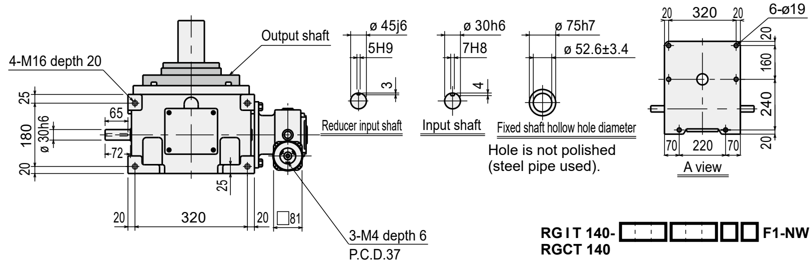

Hole is not polished (steel pipe used).

RG I T 140-☐☐☐☐ F1-NWN06 ☐ YG
RGCT 140

With worm reducer (without HO60-C/B)

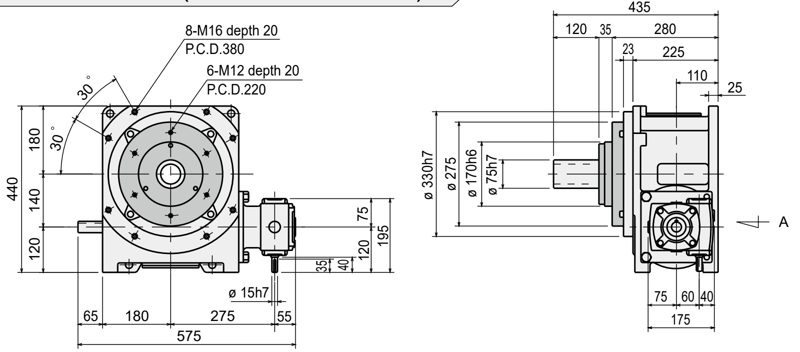

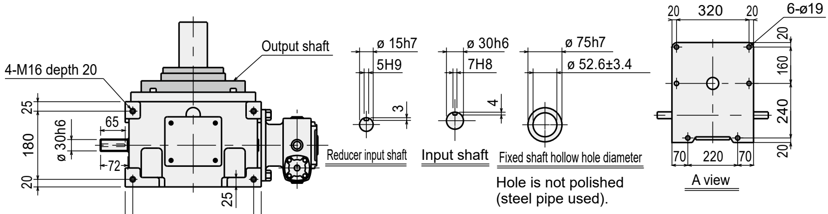

Hole is not polished (steel pipe used).

RG I T 140-☐☐☐☐ F1-NWN06 ☐ NG
RGCT 140

With the hollow shaft geared motor (0.75 kW)

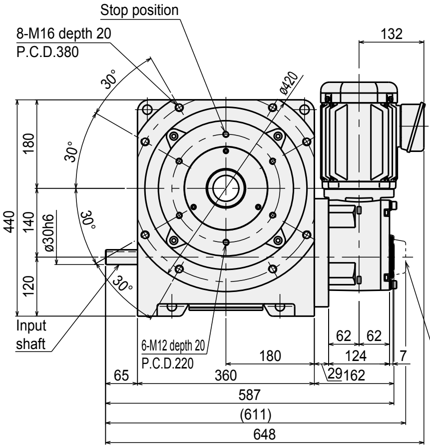

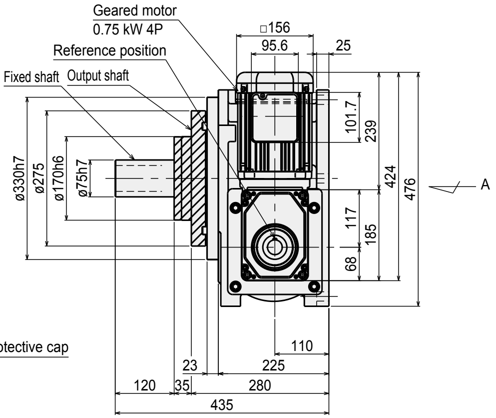

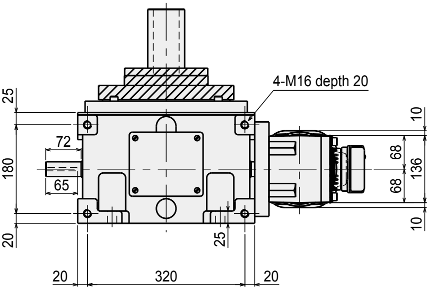

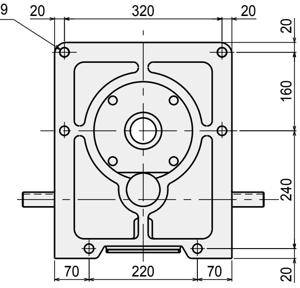

A view

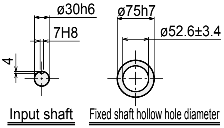

Hole is not polished (steel pipe used).

RG I T 140-□□□□ F1-NHNGKS □ F
RGCT 140

● Dimensions with options

CAD

With the hollow shaft geared motor (1.5 kW)

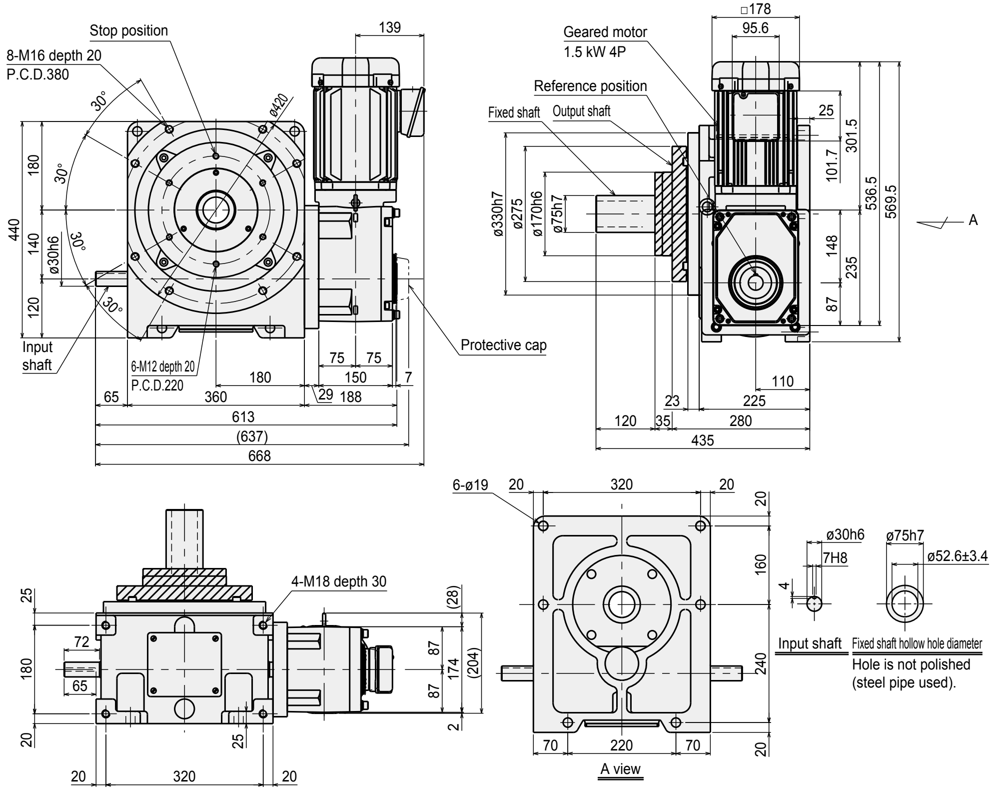

RG I T 140-□□□□ **F1-NHNGLS** □ **F**
RGCT 140

● MEMO

Table type

Index	RG I T 180
Reducer	RGCT 180

● Standard specifications

Dimensions

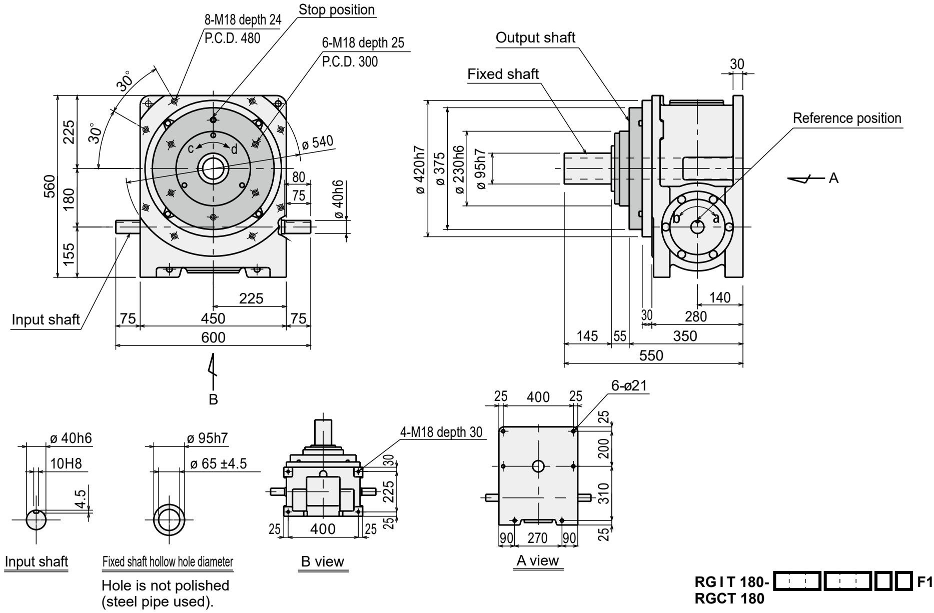

RG I T 180-☐☐☐☐ **F1**
RGCT 180

Installation position and oil supply/drain port and oil level gauge positions

Installation position	1
Series	**RGIT/RGCT**
Dimensions	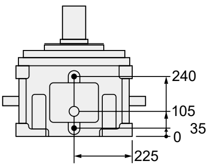

- • Oil fill/drain port (Rc$^3/_4$)
- ○ Oil level gauge (ø 30)

Characteristics

Descriptions	Unit	Characteristics	
		Output shaft	Input shaft
Allowable thrust force	N	22000	5000
Allowable radial force	N	15000	5500
Allowable bending moment	N·m	1200	-
Moment of inertia	kg·m^2	0.88	0.04

Descriptions	Unit	Characteristics
Internal frictional torque (Tin)	N·m	24
Product weight	kg	300
Oil level	ℓ	9
Paint color		Silver

Accuracy

Accuracy (sec.)		
Indexing accuracy	1 dwell	±20
	2 dwell	±40
	3 dwell	±60
	4 dwell	±80
Repeatability		15

* For the dwell accuracy, please contact CKD.

List of index angles

Index series **RGIT 180** Cam curve/MS

	Total index angle (θt) / Index number (n)	90	120	150	180	210	240	270	300	330
1 dwell	3								○	○
	4						○	○	○	○
	5				○	○	○	○	○	○
	6			○	○	○	○	○	○	○
	8		○	○	○	○	○	○	○	○
	9		○	○	○	○	○	○	○	○
	10	○	○	○	○	○	○	○	○	○
	12	○	○	○	○	○	○	○	○	○
	15	○	○	○	○	○	○	○	○	○
	16	○	○	○	○	○	○	○	○	○
	18	○	○	○	○	○	○	○	○	○
	20	○	○	○	○	○	○	○	○	○
	24	○	○	○	○	○	○	○	○	○
2 dwell	16				○	○	○	○	○	○
	18			○	○	○	○	○	○	○
	20			○	○	○	○	○	○	○
	24		○	○	○	○	○	○	○	○
	30	○	○	○	○	○	○	○	○	○
	32	○	○	○	○	○	○	○	○	○
	36	○	○	○	○	○	○	○	○	○
	40	○	○	○	○	○	○	○	○	○
	48	○	○	○	○	○	○	○	○	○
3 dwell	24					○	○	○	○	○
	30				○	○	○	○	○	○
	36			○	○	○	○	○	○	○
	48		○	○	○	○	○	○	○	○
4 dwell	32							○	○	○
	36						○	○	○	○
	40					○	○	○	○	○
	48				○	○	○	○	○	○

Reducer series **RGCT 180**

Total index angle (θt) / Reduction ratio (id)	360
1/4	○
1/5	○
1/6	○
1/8	○
1/9	○
1/10	○
1/12	○

● Dimensions with options

With worm reducer (with HO80-C/B)

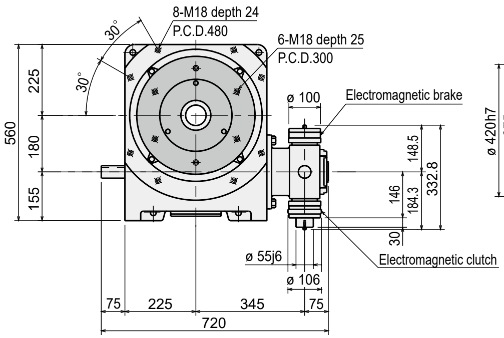

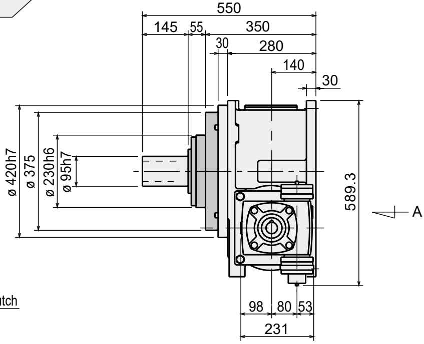

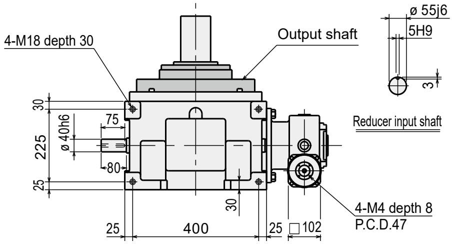

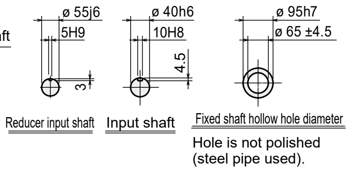

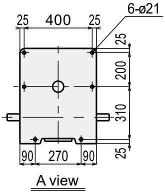

RG I T 180-□□□□□□□□ F1-NWN08 □ YG
RGCT 180

With worm reducer (without HO80-C/B)

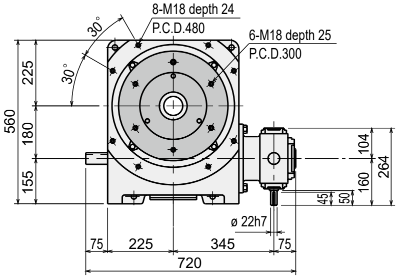

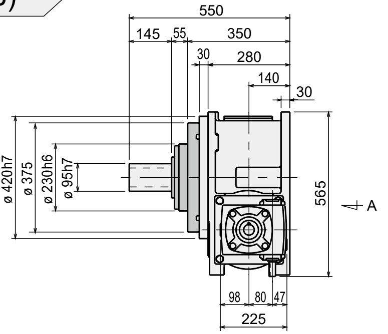

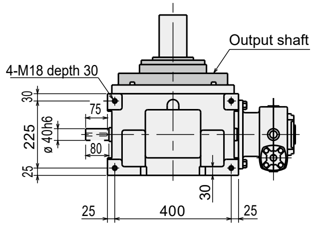

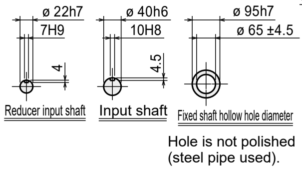

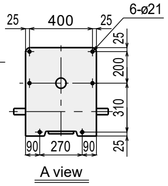

RG I T 180-□□□□□□□□ F1-NWN08 □ NG
RGCT 180

● MEMO

Dimensions with options

With the hollow shaft geared motor (1.5 kW)

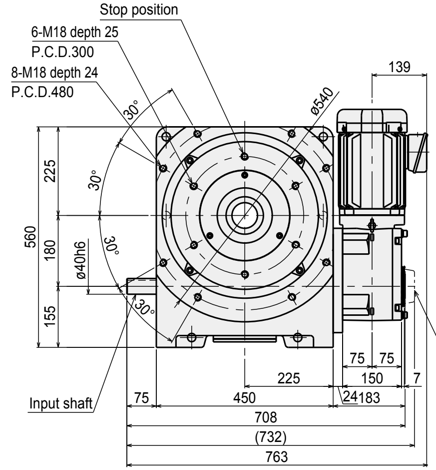

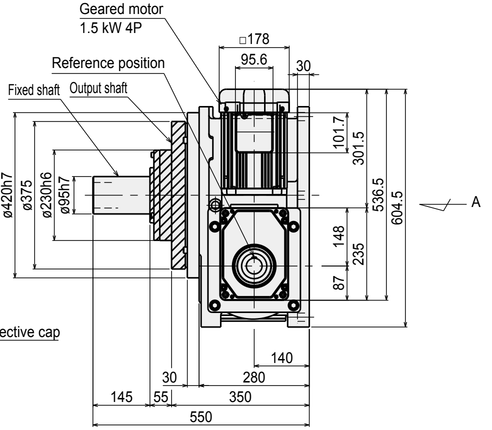

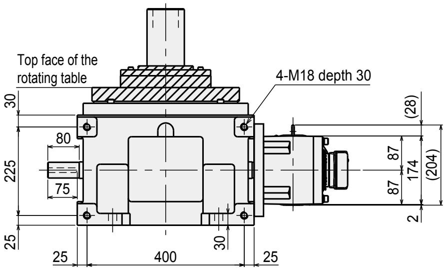

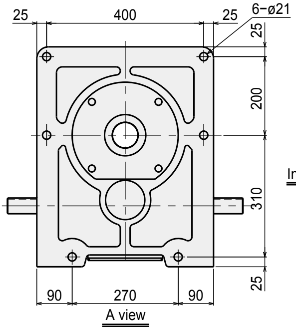

A view

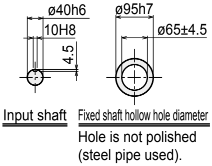

Hole is not polished (steel pipe used).

RG I T 180-☐☐☐☐☐☐☐☐F1-NHNGLS☐F
RGCT 180

With the hollow shaft geared motor (2.2 kW)

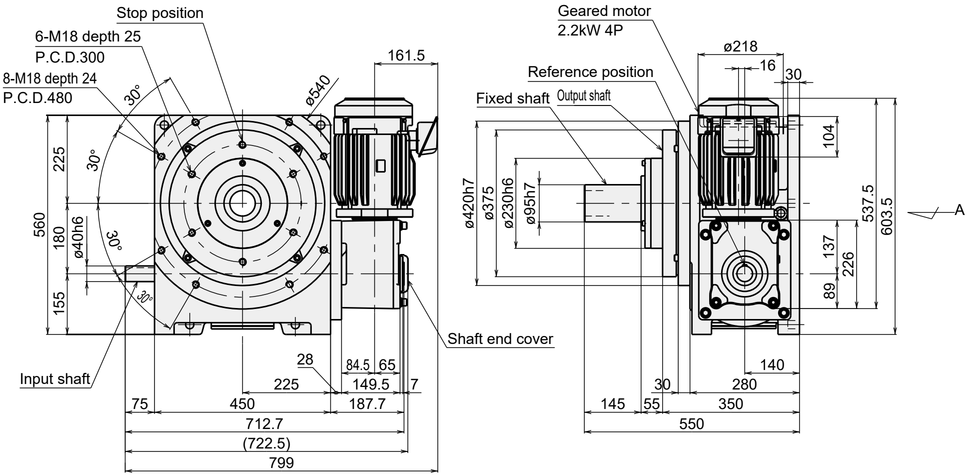

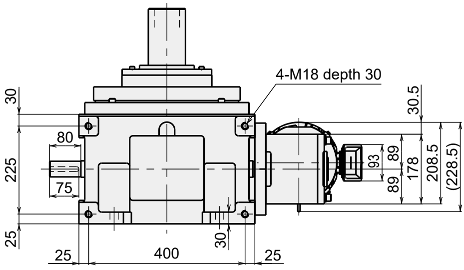

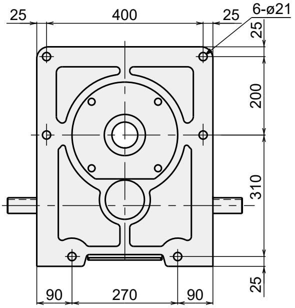

A view

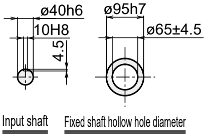

Hole is not polished
(steel pipe used).

RG I T 180-☐☐☐☐F1-NHNTMS☐F
RGCT 180

Table type

Index	**RG I T 250**
Reducer	**RGCT 250**

● Standard specifications

Dimensions

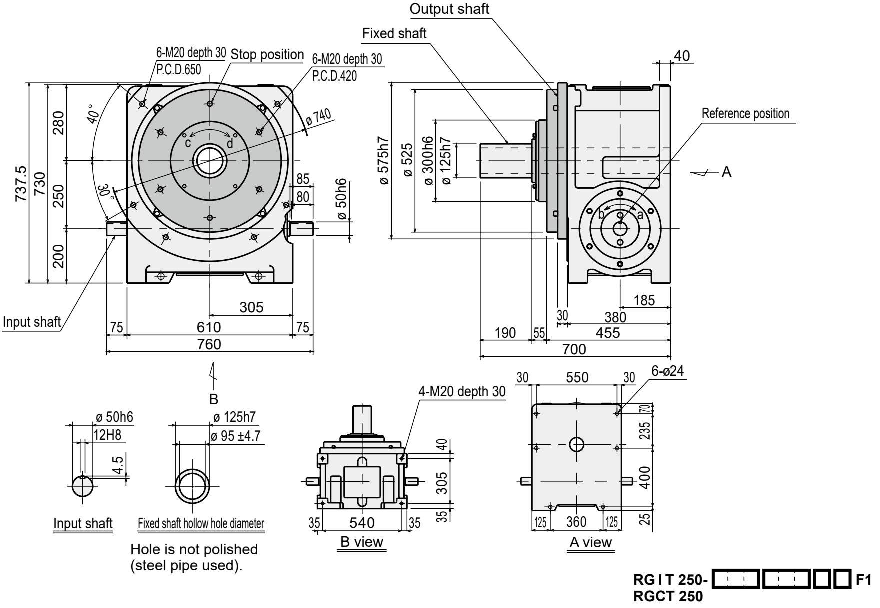

Installation position and oil supply/drain port and oil level gauge positions

Installation position	1
Series	**RGIT/RGCT**
Dimensions	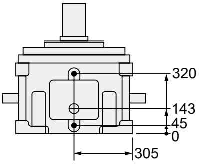

- Oil fill/drain port (Rc1)

○ Oil level gauge (ø 30)

Characteristics

Descriptions	Unit	Characteristics	
		Output shaft	Input shaft
Allowable thrust force	N	33000	8000
Allowable radial force	N	25000	9500
Allowable bending moment	N·m	2500	-
Moment of inertia	kg·m^2	4.01	0.22

Descriptions	Unit	Characteristics
Internal frictional torque (Tin)	N·m	45
Product weight	kg	650
Oil level	ℓ	24
Paint color		Silver

Accuracy

Accuracy (sec.)		
Indexing accuracy	1 dwell	±20
	2 dwell	±40
	3 dwell	±60
	4 dwell	±80
Repeatability		15

* For the dwell accuracy, please contact CKD.

List of index angles

Index series **RGIT 250** Cam curve/MS

	Total index angle (θt) / Index number (n)	90	120	150	180	210	240	270	300	330
1 dwell	3								○	○
	4						○	○	○	○
	5				○	○	○	○	○	○
	6			○	○	○	○	○	○	○
	8		○	○	○	○	○	○	○	○
	9		○	○	○	○	○	○	○	○
	10	○	○	○	○	○	○	○	○	○
	12	○	○	○	○	○	○	○	○	○
	15	○	○	○	○	○	○	○	○	○
	16	○	○	○	○	○	○	○	○	○
	18	○	○	○	○	○	○	○	○	○
	20	○	○	○	○	○	○	○	○	○
	24	○	○	○	○	○	○	○	○	○
2 dwell	16				○	○	○	○	○	○
	18			○	○	○	○	○	○	○
	20			○	○	○	○	○	○	○
	24		○	○	○	○	○	○	○	○
	30	○	○	○	○	○	○	○	○	○
	32	○	○	○	○	○	○	○	○	○
	36	○	○	○	○	○	○	○	○	○
	40	○	○	○	○	○	○	○	○	○
	48	○	○	○	○	○	○	○	○	○
3 dwell	24					○	○	○	○	○
	30				○	○	○	○	○	○
	36			○	○	○	○	○	○	○
	48		○	○	○	○	○	○	○	○
4 dwell	32							○	○	○
	36						○	○	○	○
	40					○	○	○	○	○
	48				○	○	○	○	○	○

Reducer series **RGCT 250**

Total index angle (θt) / Reduction ratio (id)	360
1/4	○
1/5	○
1/6	○
1/8	○
1/9	○
1/10	○
1/12	○

Dimensions with options

With worm reducer (with HO100-C/B)

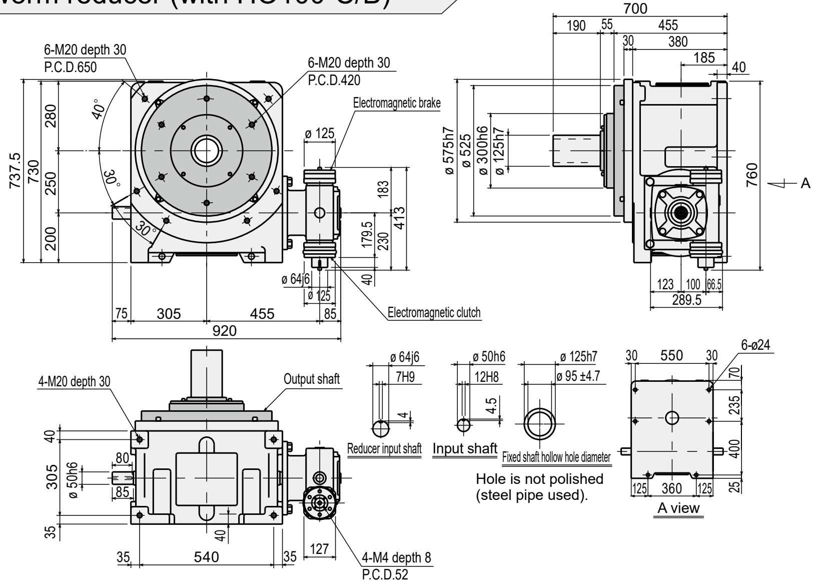

RG I T 250-☐☐☐☐☐☐☐☐ F1-NWN10 ☐ YG
RGCT 250

With worm reducer (without HO100-C/B)

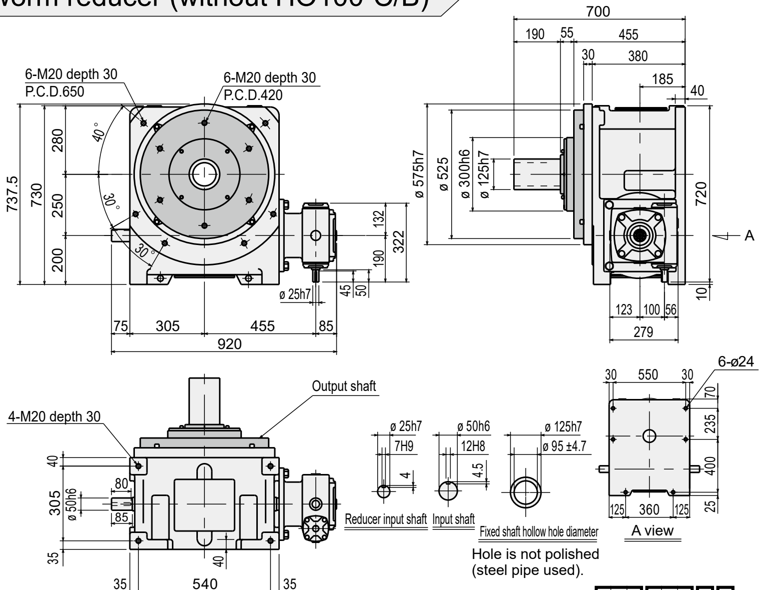

Hole is not polished
(steel pipe used).

RG I T 250-☐☐☐☐☐☐☐☐ F1-NWN10 ☐ NG
RGCT 250

With the hollow shaft geared motor (2.2 kW)

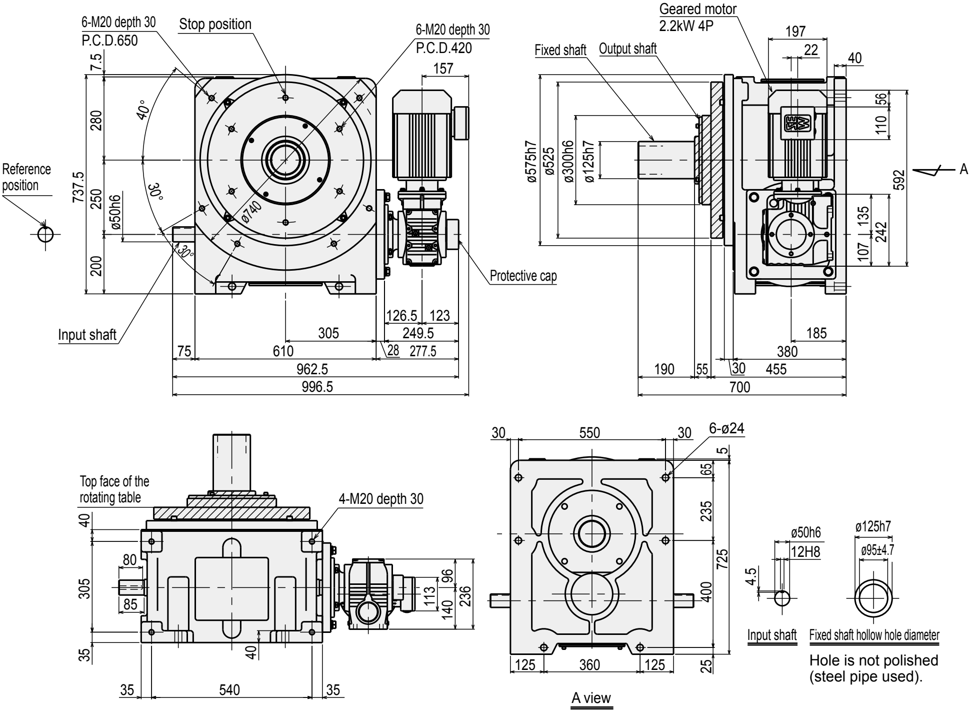

Hole is not polished (steel pipe used).

RG I T 250-☐☐☐☐ F1-NHNWMS ☐ F
RGCT 250

● Dimensions with options

With the hollow shaft geared motor (3.7 kW)

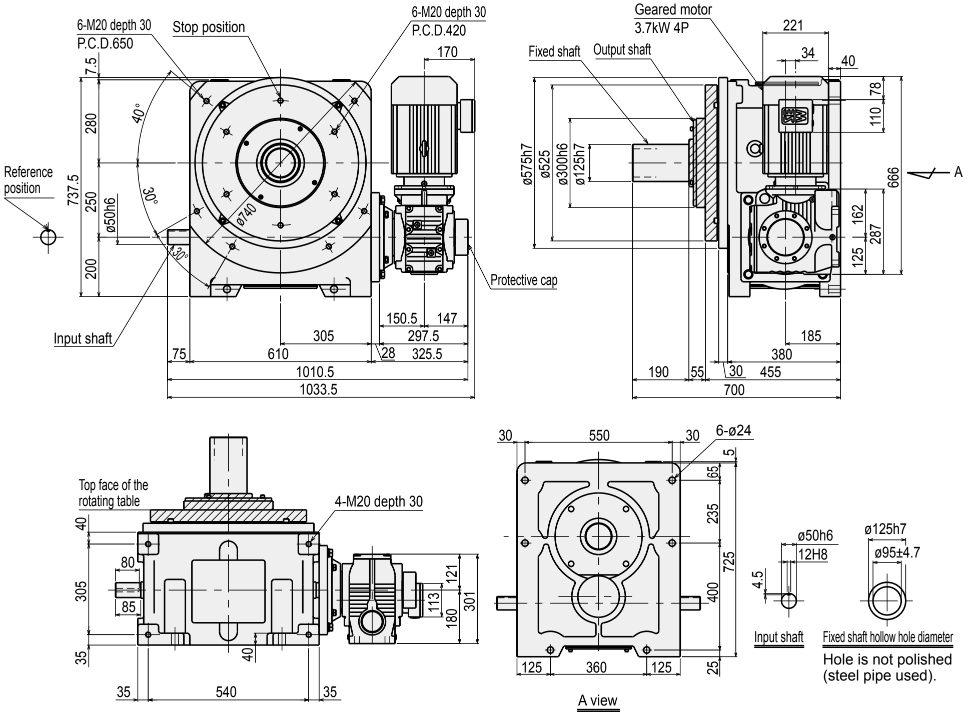

Hole is not polished (steel pipe used).

RG I T 250-☐☐☐ F1-NHNWHS☐F
RGCT 250

● MEMO

Roller gear cam drive (standard housing)

Output torque table

Index series

● RGIT (1 dwell)

Cam curve/MS

Index number	Total index angle (deg)	Size	Static rated output torque (N·m)	Rated dynamic output torque (N·m)								
				Input shaft rotational speed (rpm)								
				30	60	90	120	150	200	300	400	600
3	240	063	27.6	17.9	17.4	16.7	16.1	15.6	14.8	13.1	10.5	
		080	88.3	48.6	44.8	37.9	33.4	30.0	25.4	17.8	10.3	
	270	063	27.6	19.1	18.8	18.1	17.5	17.0	16.2	14.7	12.4	
		080	119	68.9	64.3	54.6	48.4	43.9	38.1	29.4	21.9	
		110	256	168	165	150	132	119	101	72	45	
		140	531	337	326	273	236	206	161			
	300	063	69.4	43.1	40.7	34.7	30.9	28.2	24.9	20.4	17.1	
		080	168	82.9	78.2	66.5	59.1	53.8	47.2	37.7	30.1	
		110	377	233	219	186	165	149	129	99	72	
		140	877	435	409	344	301	267	221	136		
		180	1800	902	842	699	596	510	378			
		250	4990	2350	2170	1760	1450	1160	670			
	330	063	69.4	45.0	42.5	36.5	32.5	29.7	26.3	21.8	18.5	
		080	168	86.6	81.9	70.2	62.5	56.9	50.1	40.7	33.4	
		110	377	244	231	197	175	159	139	109	84	
		140	877	458	431	367	322	288	242	164		
		180	1800	954	894	752	649	565	440	194		
		250	4990	2480	2310	1910	1600	1330	890			
4	180	063	69.4	38.3	35.0	29.7	26.3	23.8	20.7	15.9	11.8	
		080	119	64.4	58.6	49.6	43.6	39.1	33.1	23.0	13.1	
	210	063	69.4	41.7	38.6	32.8	29.2	26.5	23.3	18.6	14.8	
		080	168	80.0	74.0	62.8	55.7	50.4	43.7	33.4	24.3	
		110	415	271	262	222	196	177	152	112	74	
		140	877	418	384	320	276	240	186			
	240	063	94.1	59.0	55.3	47.1	42.0	38.3	33.9	28.0	23.6	
		080	168	85.4	80.0	68.0	60.4	54.9	48.0	38.0	29.8	
		110	415	292	285	242	215	195	169	131	97	
		140	1110	585	546	460	404	360	300	195		
		180	2560	1160	1070	890	770	660	500			
		250	4990	2430	2230	1790	1450	1130	590			
	270	063	94.1	62.0	58.7	50.1	44.7	40.8	36.2	30.1	25.8	19.0
		080	190	141	141	129	115	105	93	77	65	46
		110	415	309	305	260	231	210	183	146	115	55
		140	1110	621	585	496	437	393	334	237	142	
		180	3510	1520	1430	1210	1050	930	760	440		
		250	7170	3610	3370	2790	2370	2020	1470			
	300	063	132	73.6	69.7	60.1	53.6	49.0	43.6	36.6	31.8	24.6
		080	190	147	147	136	121	111	98	82	71	52
		110	687	393	371	320	285	259	229	186	154	95
		140	1110	651	615	527	466	421	362	270	185	
		180	3510	1610	1520	1290	1140	1010	850	550	260	
		250	7170	3800	3560	3000	2590	2240	1730	710		
	330	063	132	75.9	71.9	62.5	55.8	51.1	45.5	38.3	33.5	26.5
		080	190	153	153	142	127	116	103	86	75	57
		110	687	407	385	335	298	272	241	198	166	112
		140	1110	677	639	553	491	444	386	297	219	
		180	3510	1680	1590	1370	1210	1080	920	650	380	
		250	7170	3970	3720	3190	2770	2430	1940	1020		

● RGIT (1 dwell)

Cam curve/MS

Index number	Total index angle (deg)	Size	Static rated output torque (N·m)	Rated dynamic output torque (N·m) Input shaft rotational speed (rpm) 30	60	90	120	150	200	300	400	600
5	150	063	18.0	12.4	11.9	11.3	10.8	10.2	9.4	6.1		
		080	88.3	49.7	44.9	37.8	33.0	29.2	24.0	14.5		
		110	229	103	92	77	65	55	40			
	180	063	27.6	20.1	19.5	18.7	18.1	17.5	16.6	14.8	11.9	
		080	119	72.6	66.9	56.7	50.2	45.3	39.0	29.1	20.0	
		110	256	178	172	156	137	123	103	69	34	
		140	531	357	340	283	242	207	155			
		180	1450	715	642	516	414	319				
		250	4680	1930	1700	1300	950	590				
	210	063	27.6	21.5	21.2	20.4	19.7	19.2	18.4	16.8	14.3	8.2
		080	119	77.8	72.7	61.8	54.9	49.8	43.4	33.9	25.9	9.8
		110	256	191	189	171	151	136	117	86	57	
		140	531	387	375	315	273	240	192	101		
		180	1450	780	717	588	492	406	268			
		250	4680	2110	1910	1520	1200	900	360			
	240	063	69.4	48.3	45.7	39.0	34.8	31.7	28.1	23.2	19.6	13.6
		080	168	93.4	88.3	75.3	67.0	61.0	53.7	43.4	35.4	20.6
		110	377	265	250	213	189	171	149	117	89	32
		140	877	499	470	397	349	312	261	174		
		180	1800	1050	990	820	710	620	480	200		
		250	4990	2720	2530	2080	1740	1430	940			
	270	063	69.4	50.1	47.4	40.9	36.5	33.3	29.6	24.6	21.1	15.6
		080	168	97.0	91.8	79.1	70.5	64.3	56.8	46.6	38.9	25.7
		110	377	276	261	225	200	182	159	127	102	52
		140	877	522	492	422	372	335	286	205	129	
		180	1800	1110	1040	880	770	680	550	300		
		250	4990	2860	2670	2240	1910	1620	1180			
	300	063	69.4	51.5	48.7	42.5	37.9	34.6	30.8	25.8	22.3	17.1
		080	168	99.9	94.5	82.2	73.3	67.0	59.3	49.1	41.7	29.5
		110	415	349	344	300	267	243	215	177	148	98
		140	877	541	510	442	391	353	305	229	160	
		180	2560	1440	1350	1170	1030	920	770	530	280	
		250	4990	2980	2790	2380	2050	1770	1370	560		
	330	063	94.1	70.5	66.7	58.6	52.4	47.9	42.7	36.0	31.6	25.3
		080	168	102	97	85	76	69	61	51	44	32
		110	415	358	354	310	277	253	224	185	157	111
		140	1110	728	688	603	535	486	425	337	264	120
		180	2560	1480	1400	1220	1080	970	830	600	370	
		250	4990	3070	2880	2490	2160	1900	1520	790		
6	120	063	18.0	12.2	11.4	10.8	10.2	9.6	8.6	4.8		
		080	35.1	22.6	21.0	19.6	18.2	16.7	13.7	6.0		
		110	163	88.3	77.5	63.0	51.8	41.6	24.7			
	150	063	18.0	13.6	13.1	12.5	11.9	11.5	10.6	7.5	4.4	
		080	35.1	25.5	24.4	23.1	21.9	20.7	18.6	13.3	5.7	
		110	229	114	103	86	74	64	49	19		
		140	329	224	212	185	153	123	74			
		180	1150	549	481	371	276	181				
		250	2400	1250	1050	710	380					
	180	063	27.6	21.7	21.3	20.4	19.8	19.2	18.4	16.6	14.0	
		080	119	78.7	73.1	62.1	55.1	49.9	43.3	33.5	24.9	
		110	256	194	190	172	152	137	116	83	52	
		140	484	322	296	247	211	182	137			
		180	1150	607	550	442	357	277				
		250	3410	1730	1540	1190	880	580				

Roller gear cam drive (standard housing)

Output torque table

● RGIT (1 dwell)

Cam curve/MS

Index number	Total index angle (deg)	Size	Static rated output torque (N·m)	Rated dynamic output torque (N·m)								
				Input shaft rotational speed (rpm)								
				30	60	90	120	150	200	300	400	600
6	210	063	27.6	22.9	22.8	21.9	21.3	20.7	19.9	18.4	16.1	
		080	119	83.2	78.4	66.7	59.3	53.9	47.3	37.8	30.1	
		110	256	206	205	186	165	149	129	99	71	
		140	531	418	410	345	302	268	220	135		
		180	1150	651	604	496	415	343				
		250	3410	1860	1700	1360	1080	820				
	240	063	27.6	23.8	23.8	23.1	22.4	21.9	21.1	19.7	17.6	12.4
		080	119	86.5	81.8	70.3	62.6	57.1	50.3	41.0	33.8	20.9
		110	256	215	215	197	175	159	139	110	85	37
		140	531	438	431	368	324	290	245	169	93	
		180	1450	896	840	709	611	532	414	182		
		250	4680	2420	2250	1870	1570	1310	890			
	270	063	69.4	52.4	49.6	43.2	38.5	35.2	31.3	26.2	22.7	17.3
		080	168	102	96	84	75	68	60	50	42	30
		110	256	222	222	206	184	167	147	118	95	53
		140	877	553	522	451	399	361	311	233	162	
		180	1450	933	876	751	654	577	467	264		
		250	4680	2510	2350	1990	1700	1450	1080	290		
	300	063	69.4	53.5	50.6	44.5	39.7	36.3	32.3	27.2	23.7	18.5
		080	168	104	98	86	77	70	62	52	45	33
		110	377	298	282	247	220	201	177	146	122	81
		140	877	568	536	469	416	377	328	253	189	
		180	1800	1220	1150	1000	880	790	670	460	250	
		250	4990	3140	2950	2550	2210	1940	1560	820		
	330	063	69.4	54.4	51.5	45.5	40.7	37.3	33.2	28.0	24.5	19.5
		080	168	106	100	89	79	72	64	54	47	36
		110	377	304	287	254	227	207	183	152	129	90
		140	877	579	548	483	430	390	341	270	210	
		180	1800	1250	1180	1040	920	820	700	510	320	
		250	4990	3220	3020	2640	2310	2050	1680	1010		
8	90	063	69.4	38.2	33.8	28.5	25.0	22.4	18.8	12.6	6.3	
		080	119	64.1	56.5	47.3	40.9	35.8	28.2	13.6		
	120	063	94.1	59.0	53.5	45.5	40.4	36.7	32.1	25.5	20.0	
		080	190	133	127	116	103	93	81	63	48	
		110	415	291	276	233	205	183	154	104	54	
		140	877	449	403	333	282	238	170			
		180	2560	1150	1020	830	670	530	290			
		250	4990	2420	2080	1560	1090	610				
	150	063	132	73.6	68.2	58.1	51.8	47.3	41.8	34.4	28.9	
		080	190	147	144	132	117	107	94	76	63	
		110	687	393	363	309	274	248	215	166	123	
		140	1110	651	600	505	441	391	322	196		
		180	3510	1610	1480	1230	1060	910	700	260		
		250	7170	3790	3440	2800	2300	1850	1110			
	180	063	132	77.9	73.4	62.6	55.8	51.0	45.3	37.8	32.5	24.2
		080	279	206	194	165	147	135	119	99	85	61
		110	687	419	395	336	299	272	239	191	153	81
		140	1110	698	655	555	489	439	373	264		
		180	3510	1750	1630	1370	1200	1060	860	500		
		250	7170	4100	3810	3160	2690	2280	1660			

● RGIT (1 dwell)

Cam curve/MS

Index number	Total index angle (deg)	Size	Static rated output torque (N·m)	Rated dynamic output torque (N·m)								
				Input shaft rotational speed (rpm)								
				30	60	90	120	150	200	300	400	600
8	210	063	132	80.8	76.5	65.9	58.8	53.8	47.9	40.2	35.0	27.3
		080	279	215	203	175	156	143	127	106	92	70
		110	687	438	414	357	318	290	256	209	174	112
		140	1110	731	690	592	524	474	409	309	219	
		180	3510	1850	1740	1490	1310	1170	980	670	350	
		250	7170	4320	4060	3430	2960	2580	2030	950		
	240	063	132	82.9	78.5	68.5	61.2	56.0	49.9	42.1	36.9	29.5
		080	279	222	210	183	163	149	133	112	98	77
		110	687	452	428	373	332	303	269	222	189	133
		140	1110	756	714	621	551	500	436	342	262	
		180	3510	1920	1810	1570	1390	1250	1070	780	510	
		250	7170	4490	4220	3630	3170	2810	2290	1360		
	270	063	132	84.5	80.0	70.5	63.0	57.7	51.4	43.5	38.3	31.1
		080	279	226	214	189	169	154	138	116	102	82
		110	687	462	437	385	344	314	279	233	200	149
		140	1110	774	732	644	572	521	457	366	292	
		180	3510	1980	1870	1640	1450	1310	1140	870	630	
		250	7170	4620	4350	3790	3330	2970	2490	1650	800	
	300	063	132	85.7	81.1	71.8	64.5	59.1	52.7	44.7	39.5	32.4
		080	279	230	218	193	173	159	141	120	106	86
		110	687	470	445	393	353	323	287	241	209	160
		140	1110	788	746	658	589	537	473	384	316	191
		180	3510	2020	1910	1690	1510	1370	1190	930	710	270
		250	7170	4720	4450	3900	3460	3110	2640	1870	1120	
	330	063	132	86.6	81.9	72.5	65.7	60.2	53.7	45.6	40.4	33.4
		080	279	233	221	195	177	162	145	123	108	89
		110	687	476	450	399	361	330	294	247	216	169
		140	1110	799	756	668	604	551	486	399	334	220
		180	3510	2060	1950	1720	1550	1410	1230	980	780	390
		250	7170	4790	4520	3970	3560	3210	2760	2040	1370	
9	90	063	27.6	19.1	17.8	16.9	16.1	15.3	13.9	10.6	5.8	
		080	168	78.4	69.4	58.4	51.0	45.2	37.0	22.2	6.4	
		110	377	219	193	161	139	120	92	36		
	120	063	69.4	46.5	42.5	36.1	32.0	29.1	25.4	19.9	15.3	
		080	168	89.8	81.8	69.4	61.3	55.3	47.6	35.3	24.0	
		110	415	308	293	248	219	196	167	118	71	
		140	877	476	430	357	306	262	196			
		180	2560	1230	1110	900	750	610	380			
		250	4990	2580	2250	1730	1280	820				
	150	063	94.1	67.0	62.4	53.2	47.4	43.2	38.3	31.5	26.6	18.2
		080	190	154	151	138	123	112	99	81	67	43
		110	415	337	327	278	247	223	194	150	112	
		140	1110	682	632	534	468	417	348	227		
		180	2560	1380	1270	1060	910	780	590			
		250	7170	3990	3650	3000	2500	2060	1350			
	180	063	132	80.2	75.9	64.8	57.8	52.9	47.0	39.3	34.0	25.9
		080	190	163	162	149	133	121	107	89	76	55
		110	687	434	410	350	311	284	249	202	165	96
		140	1110	724	683	580	512	461	395	288	188	
		180	3510	1820	1720	1450	1270	1130	930	590	230	
		250	7170	4270	4000	3330	2860	2460	1860	630		

Roller gear cam drive (standard housing)

Output torque table

● RGIT (1 dwell)

Cam curve/MS

Index number	Total index angle (deg)	Size	Static rated output torque (N·m)	Rated dynamic output torque (N·m)								
				Input shaft rotational speed (rpm)								
				30	60	90	120	150	200	300	400	600
9	210	063	132	82.7	78.3	67.8	60.6	55.4	49.3	41.5	36.3	28.6
		080	190	169	169	157	140	128	114	95	82	63
		110	687	450	426	369	329	300	265	218	183	124
		140	1110	753	711	614	544	493	428	329	243	
		180	3510	1910	1800	1550	1370	1230	1040	740	440	
		250	7170	4470	4200	3580	3110	2730	2190	1170		
	240	063	132	84.5	80.0	70.1	62.6	57.3	51.1	43.2	38.0	30.6
		080	279	226	214	188	168	154	137	115	101	81
		110	687	462	437	383	342	312	277	230	197	143
		140	1110	774	732	640	568	516	452	358	281	
		180	3510	1980	1870	1630	1440	1300	1120	840	580	
		250	7170	4620	4340	3770	3300	2930	2430	1540		
	270	063	132	85.8	81.2	71.9	64.3	58.9	52.5	44.5	39.3	32.1
		080	279	231	218	193	173	158	141	119	105	85
		110	687	471	445	394	352	322	286	239	207	157
		140	1110	790	747	659	588	535	471	380	309	177
		180	3510	2030	1920	1690	1500	1360	1180	920	690	220
		250	7170	4720	4450	3910	3440	3080	2610	1800	1000	
	300	063	132	86.7	82.1	72.7	65.7	60.1	53.7	45.5	40.3	33.2
		080	279	234	221	196	177	162	144	122	108	89
		110	687	477	452	400	361	330	293	246	215	167
		140	1110	802	758	670	603	550	485	397	330	211
		180	3510	2070	1950	1720	1550	1410	1230	970	760	350
		250	7170	4810	4530	3980	3560	3200	2740	2000	1290	
	330	063	132	87.5	82.8	73.3	66.8	61.2	54.6	46.4	41.1	34.2
		080	279	236	223	198	180	165	147	125	111	91
		110	687	482	456	404	368	336	300	252	221	175
		140	1110	811	767	678	616	562	497	410	346	237
		180	3510	2100	1980	1750	1590	1440	1270	1020	820	450
		250	7170	4870	4600	4050	3650	3300	2850	2150	1510	
10	90	063	27.6	20.1	18.8	17.9	17.2	16.4	15.1	12.0	7.5	
		080	119	72.6	64.5	54.3	47.5	42.1	34.7	21.2		
		110	256	177	166	148	128	111	85	35		
		140	531	356	324	261	212	166				
		180	1450	709	598	445	305					
		250	4680	1910	1540	1010	470					
	120	063	69.4	48.3	44.3	37.7	33.5	30.4	26.6	21.2	16.7	
		080	168	93.4	85.5	72.6	64.3	58.1	50.3	38.1	27.2	
		110	377	265	242	205	180	162	137	95	54	
		140	877	498	453	378	325	282	217			
		180	1800	1050	940	770	630	510	310			
		250	4990	2710	2390	1870	1430	990				
	150	063	94.1	68.9	64.5	55.0	49.0	44.8	39.7	32.8	27.9	
		080	168	99.8	93.4	79.5	70.7	64.3	56.4	45.0	35.9	
		110	415	348	340	289	257	233	203	159	122	
		140	1110	707	659	557	490	439	369	252	135	
		180	2560	1430	1330	1110	960	840	650	290		
		250	4990	2970	2720	2210	1820	1470	880			
	180	063	94.1	71.7	67.9	58.3	52.0	47.5	42.2	35.4	30.6	23.3
		080	190	167	167	153	137	125	111	93	80	59
		110	415	365	361	309	275	251	220	178	145	85
		140	1110	744	703	600	530	479	412	308	213	
		180	2560	1520	1430	1210	1060	940	780	480		
		250	7170	4410	4130	3470	2990	2600	2020	860		

RGIT (1 dwell)

Cam curve/MS

Index number	Total index angle (deg)	Size	Static rated output torque (N·m)	Rated dynamic output torque (N·m)								
				Input shaft rotational speed (rpm)								
				30	60	90	120	150	200	300	400	600
10	210	063	94.1	73.6	69.7	60.7	54.2	49.6	44.1	37.1	32.5	25.6
		080	190	172	172	161	143	131	117	98	85	66
		110	415	377	372	324	288	263	233	191	161	108
		140	1110	770	728	631	560	508	442	345	263	
		180	3510	1970	1850	1600	1420	1270	1090	790	510	
		250	7170	4590	4310	3700	3230	2850	2320	1350		
	240	063	94.1	74.9	70.9	62.5	55.8	51.1	45.5	38.5	33.8	27.3
		080	190	176	176	166	148	136	121	102	89	71
		110	415	385	380	335	299	273	242	201	172	124
		140	1110	788	745	655	582	530	465	372	297	
		180	3510	2020	1910	1680	1480	1340	1160	890	640	
		250	7170	4710	4440	3870	3400	3030	2540	1680	810	
	270	063	94.1	75.9	71.8	63.6	57.1	52.3	46.7	39.5	34.9	28.5
		080	190	178	178	169	152	139	124	105	92	75
		110	415	391	386	342	307	280	249	208	180	136
		140	1110	802	758	669	600	546	482	392	322	197
		180	3510	2070	1950	1720	1540	1400	1220	960	730	290
		250	7170	4810	4530	3980	3530	3170	2700	1920	1170	
	300	063	94.1	76.6	72.5	64.2	58.2	53.3	47.6	40.4	35.7	29.5
		080	190	180	180	171	155	142	127	108	95	78
		110	687	483	457	404	367	335	298	251	219	173
		140	1110	811	768	678	614	560	495	407	341	228
		180	3510	2100	1980	1750	1580	1440	1260	1010	800	410
		250	7170	4880	4600	4050	3640	3280	2820	2100	1430	
	330	063	94.1	77.1	73.0	64.6	59.1	54.2	48.4	41.1	36.4	30.2
		080	190	182	182	173	158	145	129	110	97	80
		110	687	487	461	408	373	341	304	257	225	180
		140	1110	819	775	685	626	571	506	419	356	251
		180	3510	2120	2010	1770	1620	1470	1300	1050	860	510
		250	7170	4930	4650	4100	3720	3370	2920	2230	1630	
12	90	063	27.6	21.7	20.6	19.6	18.9	18.2	16.9	14.2	10.1	
		080	119	78.6	70.6	59.7	52.4	46.9	39.4	26.6	13.7	
		110	256	193	183	165	143	126	101	54		
		140	531	390	361	295	246	201	129			
		180	1150	602	513	384	265					
		250	3410	1710	1400	940	490					
	120	063	69.4	51.0	47.2	40.1	35.7	32.5	28.6	23.1	18.8	10.7
		080	119	86.5	79.9	67.9	60.2	54.5	47.3	36.4	26.9	
		110	256	215	209	190	168	151	128	91	56	
		140	531	437	419	351	303	264	207	96		
		180	1450	894	811	661	547	444	275			
		250	4680	2410	2150	1690	1310	940				
	150	063	69.4	53.5	50.5	43.1	38.4	35.0	31.0	25.6	21.7	15.2
		080	119	91.0	85.9	73.1	65.0	59.2	52.0	41.8	33.8	18.7
		110	377	298	281	239	212	192	168	131	101	39
		140	877	567	533	451	396	354	298	202	106	
		180	1450	959	896	745	638	548	412			
		250	4680	2580	2390	1950	1610	1310	810			
	180	063	69.4	55.1	52.1	45.1	40.2	36.8	32.7	27.3	23.6	17.8
		080	168	107	101	88	78	71	63	52	44	30
		110	377	308	291	251	224	204	179	145	118	68
		140	877	589	556	478	423	381	328	244	166	
		180	1450	1000	940	800	700	610	490	270		
		250	4680	2690	2510	2110	1800	1530	1120			

Roller gear cam drive (standard housing)

Output torque table

● RGIT (1 dwell)

Cam curve/MS

Index number	Total index angle (deg)	Size	Static rated output torque (N·m)	Rated dynamic output torque (N·m)								
				Input shaft rotational speed (rpm)								
				30	60	90	120	150	200	300	400	600
12	210	063	69.4	56.1	53.0	46.6	41.6	38.0	33.8	28.5	24.8	19.5
		080	168	109	103	91	81	74	66	55	47	35
		110	415	388	383	336	299	273	242	201	171	121
		140	877	603	570	498	442	400	348	271	204	
		180	1800	1310	1240	1080	950	850	720	500	290	
		250	4990	3360	3160	2730	2370	2090	1680	910		
	240	063	69.4	56.7	53.7	47.5	42.6	39.0	34.7	29.3	25.7	20.7
		080	168	111	105	93	83	76	67	57	49	38
		110	415	394	389	344	308	282	250	209	180	135
		140	877	613	579	511	456	415	363	290	230	
		180	1800	1340	1260	1110	980	890	760	560	380	
		250	4990	3420	3220	2820	2480	2210	1830	1160	470	
	270	063	69.4	57.2	54.1	47.9	43.4	39.8	35.5	30.0	26.5	21.5
		080	168	112	106	93	85	77	69	58	51	40
		110	415	398	393	348	315	288	256	215	187	145
		140	877	620	586	517	467	426	375	304	249	
		180	2560	1700	1610	1420	1280	1160	1010	795	612	
		250	4990	3470	3270	2870	2560	2300	1940	1340	750	
	300	063	69.4	57.6	54.5	48.2	44.1	40.4	36.1	30.6	27.0	22.2
		080	168	112	106	94	86	79	70	59	52	42
		110	415	401	396	351	321	294	261	220	192	152
		140	1110	825	780	690	630	575	509	422	358	252
		180	2560	1720	1630	1440	1310	1190	1040	830	670	340
		250	7170	4970	4690	4130	3750	3390	2940	2250	1640	
	330	063	69.4	57.8	54.7	48.5	44.4	41.0	36.6	31.0	27.5	22.8
		080	168	113	107	95	87	80	71	60	53	43
		110	415	403	399	353	323	298	266	224	197	158
		140	1110	830	786	695	636	585	519	432	370	272
		180	2560	1740	1640	1450	1320	1210	1070	870	710	420
		250	7170	5010	4730	4170	3800	3470	3020	2360	1810	
15	90	063	18.0	15.5	14.9	14.2	13.6	13.1	12.2	8.6	5.1	
		080	35.1	29.6	28.3	26.8	25.5	24.1	21.7	15.8	7.2	
		110	229	133	120	100	86	75	58	24		
		140	329	267	252	220	182	148	92			
		180	696	545	495	379	277	174				
		250	2400	1510	1260	880	500					
	120	063	18.0	16.5	16.2	15.6	15.1	14.6	13.9	10.9	8.3	3.0
		080	88.3	68.0	63.5	53.9	47.8	43.2	37.5	28.9	21.3	5.4
		110	229	142	132	112	98	88	73	48	23	
		140	484	380	352	295	255	223	176	86		
		180	1150	731	670	548	455	371	235			
		250	3410	2080	1880	1490	1170	860	320			
	150	063	18.0	17.0	16.9	16.4	15.9	15.5	14.9	12.1	9.9	5.9
		080	88.3	70.3	66.5	57.1	50.7	46.2	40.6	32.6	26.2	14.3
		110	229	147	139	119	105	95	82	61	41	
		140	531	486	478	408	359	323	273	192	112	
		180	1150	768	719	603	517	444	335			
		250	3410	2180	2030	1670	1390	1140	730			
	180	063	18.0	17.3	17.2	17.0	16.5	16.1	15.6	12.9	10.9	7.5
		080	88.3	71.7	67.8	59.2	52.8	48.1	42.5	34.9	29.2	19.3
		110	256	242	242	226	201	184	162	132	108	67
		140	531	498	491	427	378	342	295	223	158	
		180	1450	1040	980	850	740	660	540	340		
		250	3410	2250	2100	1790	1530	1310	970			

RGIT (1 dwell)

Cam curve/MS

Index number	Total index angle (deg)	Size	Static rated output torque (N·m)	Rated dynamic output torque (N·m)								
				Input shaft rotational speed (rpm)								
				30	60	90	120	150	200	300	400	600
15	210	063	18.0	17.4	17.4	17.4	16.9	16.6	16.0	13.4	11.5	8.5
		080	88.3	72.6	68.7	60.7	54.3	49.6	43.9	36.5	31.1	22.4
		110	256	246	245	233	208	190	168	138	117	81
		140	531	506	500	441	392	356	310	244	188	
		180	1450	1060	1000	880	770	690	590	410	240	
		250	4680	2840	2670	2330	2030	1790	1460	830		
	240	063	18.0	17.6	17.5	17.5	17.3	16.9	16.4	13.8	12.0	9.2
		080	119	98.3	93.0	82.3	74.5	68.2	60.6	51.0	44.4	34.7
		110	256	248	248	235	213	194	172	143	123	90
		140	531	512	505	446	402	366	321	258	208	112
		180	1450	1070	1010	890	800	720	620	460	310	
		250	4680	2880	2710	2370	2110	1880	1570	1020	460	
	270	063	18.0	17.6	17.6	17.6	17.6	17.2	16.7	14.1	12.3	9.7
		080	119	98.9	93.6	82.8	75.8	69.4	61.8	52.1	45.7	36.5
		110	256	250	250	237	216	198	176	147	128	97
		140	531	516	509	450	411	374	330	269	222	138
		180	1450	1080	1020	900	820	740	640	490	360	
		250	4680	2900	2740	2400	2170	1940	1650	1160	680	
	300	063	18.0	17.7	17.7	17.7	17.7	17.4	16.9	14.4	12.6	10.1
		080	119	99.3	94.0	83.2	76.2	70.4	62.7	53.0	46.7	37.8
		110	256	251	251	238	218	201	179	150	131	103
		140	531	518	512	453	414	381	337	227	233	157
		180	1450	1090	1030	910	830	760	660	520	400	170
		250	4680	2920	2750	2420	2200	2000	1710	1260	830	
	330	063	18.0	17.7	17.7	17.7	17.7	17.6	17.1	14.6	12.8	10.4
		080	119	99.6	94.3	83.5	76.5	71.2	63.5	53.8	47.5	38.9
		110	256	252	252	239	219	204	181	153	134	107
		140	531	521	514	455	416	386	342	284	241	172
		180	1450	1090	1030	910	830	770	680	540	430	220
		250	4680	2930	2770	2440	2210	2040	1760	1340	950	
16	90	063	18.0	15.8	15.2	14.5	13.9	13.4	12.5	9.0	5.6	
		080	35.1	30.2	28.9	27.4	26.1	24.8	22.5	16.8	8.6	
		110	163	118	107	89	77	66	51	20		
		140	329	273	258	227	189	156	101			
		180	696	558	511	395	295	195				
		250	1950	1210	1000	670	330					
	120	063	18.0	16.6	16.4	15.8	15.3	14.8	14.1	11.2	8.6	3.5
		080	35.1	32.1	31.6	30.3	29.1	28.1	26.4	22.8	17.3	
		110	229	144	134	114	100	89	75	51	26	
		140	329	294	288	258	223	195	153	70		
		180	1150	743	684	561	469	387	254			
		250	2400	1680	1520	1190	920	640				
	150	063	18.0	17.1	17.1	16.6	16.1	15.7	15.1	12.3	10.1	6.2
		080	88.3	70.9	67.0	57.7	51.3	46.7	41.1	33.2	26.9	15.3
		110	229	149	140	120	106	96	83	62	43	
		140	484	400	376	321	282	252	212	142	72	
		180	1150	777	727	613	527	456	349			
		250	3410	2210	2050	1700	1430	1180	790			
	180	063	18.0	17.3	17.3	17.1	16.6	16.2	15.7	13.0	11.1	7.7
		080	88.3	72.1	68.2	59.8	53.2	48.6	43.0	35.3	29.7	20.0
		110	229	151	143	125	111	101	88	69	53	22
		140	484	408	385	336	297	267	229	169	113	
		180	1150	797	749	647	564	498	405	231		
		250	3410	2260	2120	1810	1550	1340	1010	330		

Roller gear cam drive (standard housing)

Output torque table

● RGIT (1 dwell)

Cam curve/MS

Index number	Total index angle (deg)	Size	Static rated output torque (N·m)	Rated dynamic output torque (N·m)								
				Input shaft rotational speed (rpm)								
				30	60	90	120	150	200	300	400	600
16	210	063	18.0	17.5	17.5	17.5	17.1	16.7	16.1	13.5	11.7	8.7
		080	88.3	72.9	69.0	61.0	54.7	49.9	44.3	36.8	31.5	23.0
		110	229	153	145	128	114	104	91	74	60	33
		140	484	414	391	344	307	278	241	186	138	39
		180	1150	810	763	668	590	526	441	293		
		250	3410	2300	2160	1880	1640	1440	1150	590		
	240	063	18.0	17.6	17.6	17.6	17.4	17.0	16.5	13.9	12.1	9.4
		080	88.3	73.4	69.5	61.5	55.8	51.0	45.3	38.0	32.9	25.1
		110	229	154	146	129	117	106	94	77	64	41
		140	484	418	395	348	314	286	250	198	156	72
		180	1450	1080	1020	900	810	730	630	470	330	
		250	3410	2330	2190	1910	1700	1510	1240	770		
	270	063	18.0	17.7	17.7	17.7	17.6	17.3	16.8	14.2	12.4	9.9
		080	88.3	73.8	69.8	61.8	56.6	51.9	46.2	38.8	33.9	26.5
		110	256	251	250	237	217	199	177	148	129	99
		140	531	517	511	452	413	377	333	272	226	144
		180	1450	1090	1030	900	820	750	650	500	380	120
		250	3410	2340	2210	1930	1750	1560	1310	890	460	
	300	063	18.0	17.7	17.7	17.7	17.7	17.5	17.0	14.4	12.7	10.2
		080	88.3	74.1	70.1	62.0	56.8	52.6	46.9	39.5	34.6	27.7
		110	256	252	251	239	219	202	180	151	132	104
		140	531	520	514	454	415	383	339	280	236	162
		180	1450	1090	1030	910	830	760	670	530	410	190
		250	3410	2360	2220	1950	1770	1610	1370	980	600	
	330	063	18.0	17.8	17.8	17.8	17.7	17.7	17.2	14.6	12.9	10.5
		080	88.3	74.3	70.3	62.2	57.0	53.2	47.4	40.1	35.3	28.5
		110	256	252	252	239	219	205	182	154	135	107
		140	531	522	516	456	417	389	345	286	244	176
		180	1450	1100	1040	920	840	780	680	550	440	240
		250	3410	2370	2230	1960	1780	1640	1410	1050	710	
18	90	080	35.1	31.0	29.9	28.4	27.2	25.9	23.7	18.6	11.0	
		110	163	122	111	93	80	70	55	26		
		140	296	177	158	127	101	77				
		180	636	474	416	319	234	147				
		250	1950	1260	1060	740	430					
	120	080	35.1	32.6	32.4	31.0	29.9	28.9	27.3	23.9	18.8	5.5
		110	163	128	120	102	89	80	67	46	24	
		140	329	300	296	267	231	203	163	85		
		180	696	624	604	495	414	341	224			
		250	1950	1350	1230	950	720	480				
	150	080	35.1	33.5	33.4	32.6	31.6	30.7	29.3	26.7	22.7	12.7
		110	163	132	124	107	95	86	74	56	39	
		140	329	310	308	283	249	223	187	125	63	
		180	696	648	634	537	461	399	305			
		250	2400	1790	1660	1380	1150	940	600			
	180	080	35.1	33.9	33.9	33.7	32.7	31.8	30.7	28.5	25.0	16.7
		110	163	134	126	111	98	89	78	61	47	19
		140	329	315	314	295	261	235	201	148	99	
		180	696	662	649	564	491	433	352	199		
		250	2400	1830	1710	1460	1250	1070	790			
	210	080	35.1	34.2	34.2	34.1	33.5	32.7	31.6	29.7	26.6	19.3
		110	229	154	146	129	116	105	93	75	62	37
		140	329	319	318	300	269	243	211	163	121	
		180	1150	818	771	676	601	538	455	313	174	
		250	2400	1850	1730	1510	1320	1150	910	430		

● RGIT (1 dwell)

Cam curve/MS

Index number	Total index angle (deg)	Size	Static rated output torque (N·m)	Rated dynamic output torque (N·m)								
				Input shaft rotational speed (rpm)								
				30	60	90	120	150	200	300	400	600
18	240	080	35.1	34.4	34.4	34.4	34.2	33.4	32.3	30.5	27.7	21.0
		110	229	155	147	129	118	108	95	78	66	44
		140	329	321	320	303	275	250	219	173	136	62
		180	1150	825	778	684	618	557	478	351	232	
		250	2400	1860	1750	1530	1360	1210	990	580		
	270	080	35.1	34.6	34.6	34.5	34.5	33.9	32.9	31.2	28.5	22.3
		110	229	156	147	130	119	109	97	80	69	49
		140	329	322	322	305	278	255	224	181	147	83
		180	1150	830	784	690	627	571	495	377	273	
		250	2400	1880	1770	1550	1390	1250	1040	680	320	
	300	080	35.1	34.7	34.7	34.6	34.6	34.4	33.4	31.8	29.2	23.2
		110	229	156	148	131	120	111	99	82	71	53
		140	329	324	323	306	280	259	229	187	155	98
		180	1150	834	787	694	632	583	508	397	303	112
		250	2400	1880	1780	1560	1410	1280	1090	760	440	
	330	080	35.1	34.7	34.7	34.7	34.7	34.6	33.8	32.3	29.7	24.0
		110	229	156	148	131	120	112	100	84	73	56
		140	329	324	324	307	281	261	232	191	161	109
		180	1150	836	790	697	636	590	519	413	326	157
		250	2400	1890	1780	1570	1420	1300	1120	820	540	
20	90	080	23.0	21.0	20.3	19.2	18.3	17.3	15.5	9.2	2.3	
		110	121	93.1	85.0	70.9	61.0	52.7	40.4	15.6		
		140	296	181	163	132	107	84	45			
		180	636	488	433	337	255	173				
		250	1550	982	825	555	283					
	120	080	23.0	21.8	21.7	20.8	20.0	19.2	18.0	13.1	8.4	
		110	121	97.1	91.4	77.2	67.6	60.2	50.1	32.1	13.6	
		140	296	191	178	148	126	108	79			
		180	636	519	481	393	325	264	164			
		250	1950	1380	1260	990	770	550				
	150	080	23.0	22.2	22.2	21.7	21.0	20.3	19.3	15.1	11.4	
		110	163	133	125	109	96	87	75	58	42	
		140	296	195	183	157	136	120	96			
		180	696	656	642	549	474	412	322			
		250	1950	1420	1310	1090	900	730	430			
	180	080	23.0	22.5	22.4	22.3	21.7	21.1	20.2	16.3	13.1	7.1
		110	163	134	127	112	100	91	79	63	50	23
		140	329	317	316	299	264	239	206	154	107	
		180	696	668	656	573	501	444	364	220		
		250	1950	1440	1350	1160	980	830	590			
	210	080	23.0	22.6	22.6	22.5	22.2	21.6	20.8	17.1	14.2	9.1
		110	163	135	128	113	102	93	82	66	54	33
		140	329	320	320	302	272	247	215	168	127	46
		180	696	675	664	582	520	465	392	268	144	
		250	1950	1460	1370	1180	1040	900	690	290		
	240	080	23.0	22.7	22.7	22.6	22.6	22.1	21.3	17.7	15.0	10.5
		110	163	136	129	114	104	95	84	69	58	39
		140	329	322	322	304	278	253	222	177	141	72
		180	696	680	670	588	533	481	412	300	196	
		250	1950	1470	1380	1200	1070	950	760	420		
	270	080	23.0	22.8	22.8	22.7	22.7	22.4	21.7	18.2	15.6	11.5
		110	163	137	129	114	104	97	86	71	60	43
		140	329	324	323	306	279	258	227	184	151	91
		180	696	683	674	593	539	493	426	324	232	
		250	1950	1480	1390	1210	1090	980	810	510		

Output torque table

● RGIT (1 dwell)

Cam curve/MS

Index number	Total index angle (deg)	Size	Static rated output torque (N·m)	Rated dynamic output torque (N·m)								
				Input shaft rotational speed (rpm)								
				30	60	90	120	150	200	300	400	600
20	300	080	23.0	22.8	22.8	22.8	22.7	22.7	22.0	18.5	16.0	12.2
		110	163	137	129	115	105	98	87	72	62	46
		140	329	325	324	307	281	261	231	190	158	104
		180	696	686	676	596	543	502	438	341	258	
		250	1950	1480	1400	1220	1100	1010	850	570	300	
	330	080	23.0	22.9	22.9	22.8	22.8	22.8	22.3	18.8	16.4	12.8
		110	163	137	130	115	105	98	88	74	64	49
		140	329	325	325	308	282	262	235	194	164	115
		180	696	687	678	598	545	506	447	354	278	129
		250	1950	1490	1400	1230	1110	1020	880	620	380	
24	90	110	48.1	44.6	43.1	40.3	37.4	34.3	28.4	12.9		
		140	211	164	149	121	99	79	46			
		180	432	387	366	309	238	168				
		250	938	835	745	512	281					
	120	110	48.1	46.1	45.6	43.7	41.5	39.4	35.5	26.1	12.5	
		140	211	170	159	134	114	98	74			
		180	432	405	397	352	293	241	155			
		250	938	877	830	646	478	309				
	150	110	48.1	46.8	46.5	45.7	43.9	42.2	39.3	32.7	22.9	
		140	211	173	163	141	123	108	88	49		
		180	432	415	409	377	323	278	210	71		
		250	1550	1100	1010	850	690	550	320			
	180	110	121	101	96	84	76	69	60	47	37	15
		140	211	175	165	144	128	114	96	64		
		180	432	420	416	389	341	300	242	131		
		250	1550	1110	1030	890	750	630	440			
	210	110	121	102	96	85	77	70	62	50	40	23
		140	211	176	166	146	132	118	101	74	47	
		180	432	423	420	394	354	315	262	168	72	
		250	1550	1120	1050	900	800	690	520	190		
	240	110	121	102	96	85	78	72	63	52	43	28
		140	211	176	167	147	133	122	105	80	57	
		180	432	425	423	398	360	326	276	194	113	
		250	1550	1120	1060	920	820	720	580	300		
	270	110	121	102	97	85	78	73	64	53	45	32
		140	211	177	167	147	134	124	108	85	64	
		180	432	427	425	401	363	334	287	212	141	
		250	1550	1130	1060	930	830	750	620	370		
	300	110	121	102	97	86	78	73	65	54	47	34
		140	211	177	168	148	135	125	111	88	70	
		180	432	428	426	403	366	338	295	225	162	
		250	1550	1130	1070	930	840	760	650	430	200	
	330	110	121	103	97	86	79	73	66	55	48	36
		140	211	178	168	148	135	126	112	91	74	42
		180	432	429	428	404	368	340	302	235	178	63
		250	1550	1130	1070	940	850	770	670	470	270	

Roller gear cam drive (standard housing)

Output torque table

Index series

● RGIT (2 dwell)

Cam curve/MS

Index number	Total index angle (deg)	Size	Static rated output torque (N·m)	Rated dynamic output torque (N·m)								
				Input shaft rotational speed (rpm)								
				15	30	45	60	75	100	150	200	300
16	150	063	132	73.6	69.7	60.1	53.6	49.0	43.6	36.6	31.8	24.6
		080	190	147	147	136	121	111	98	82	71	52
		110	415	323	319	274	244	222	196	158	129	75
	180	063	132	77.9	73.7	64.6	57.7	52.8	47.1	39.7	34.9	28.0
		080	279	206	195	171	152	139	124	105	92	73
		110	687	419	397	348	310	283	251	208	177	126
		140	1110	698	660	576	512	465	406	319	246	
		180	3510	1750	1650	1440	1270	1140	980	720	480	
		250	7170	4110	3860	3340	2920	2590	2120	1280		
	210	063	132	80.8	76.5	67.7	60.8	55.7	49.6	42.1	37.1	30.4
		080	279	215	203	180	162	148	132	112	98	80
		110	687	438	415	367	329	301	267	224	193	147
		140	1110	732	692	611	546	497	437	353	287	165
		180	3510	1850	1750	1540	1370	1240	1080	840	620	190
		250	7170	4330	4080	3580	3160	2840	2390	1650	920	
	240	063	132	83.0	78.5	69.5	63.2	57.9	51.6	43.8	38.8	32.1
		080	279	222	210	186	169	154	138	117	103	85
		110	687	452	428	379	344	314	280	235	205	161
		140	1110	756	715	632	573	522	461	379	317	209
		180	3510	1920	1820	1600	1450	1320	1150	920	730	360
		250	7170	4500	4240	3730	3350	3020	2600	1910	1280	
	270	063	132	84.5	80.0	70.8	64.9	59.6	53.2	45.2	40.1	33.5
		080	279	226	214	190	174	160	142	121	107	89
		110	687	462	438	387	355	325	290	245	215	172
		140	1110	775	733	648	593	542	480	398	338	241
		180	3510	1980	1870	1650	1510	1380	1210	980	810	480
		250	7170	4620	4360	3840	3500	3170	2750	2110	1550	
	300	063	132	85.7	81.1	71.8	65.8	61.0	54.5	46.3	41.2	34.5
		080	279	230	218	193	177	164	146	124	110	92
		110	687	470	445	394	361	334	298	252	222	181
		140	1110	789	746	660	604	558	496	413	355	264
		180	3510	2030	1920	1690	1550	1430	1260	1030	860	570
		250	7170	4720	4460	3930	3580	3290	2870	2260	1740	720
	330	063	132	86.6	81.9	72.5	66.5	62.2	55.5	47.3	42.1	35.4
		080	279	233	221	195	179	167	149	127	113	95
		110	687	476	451	399	366	341	305	258	228	187
		140	1110	799	757	669	613	572	508	426	369	283
		180	3510	2060	1950	1720	1580	1470	1300	1070	910	640
		250	7170	4790	4530	4000	3650	3380	2970	2370	1900	980
18	120	063	69.4	46.6	43.9	37.4	33.3	30.4	26.8	22.1	18.5	12.3
	150	063	94.1	67.0	63.4	54.9	49.0	44.9	39.9	33.5	29.1	22.6
		080	190	154	154	143	127	117	104	87	75	57
		110	687	410	388	336	299	273	241	198	166	109
		140	1110	682	644	556	492	446	386	294	213	
		180	1800	1110	1040	890	777	688	563	334		
		250	4990	2860	2680	2260	1940	1660	1250	390		
	180	063	132	80.2	75.9	66.9	59.8	54.7	48.8	41.2	36.3	29.4
		080	190	163	163	154	137	126	112	94	82	65
		110	687	434	411	362	323	295	262	218	187	137
		140	1110	724	684	602	535	486	426	339	269	
		180	3510	1830	1720	1510	1340	1210	1040	790	550	
		250	7170	4280	4030	3510	3080	2740	2280	1470	630	

● RGIT (2 dwell)

Cam curve/MS

Index number	Total index angle (deg)	Size	Static rated output torque (N·m)	Rated dynamic output torque (N·m)								
				Input shaft rotational speed (rpm)								
				15	30	45	60	75	100	150	200	300
18	210	063	132	82.7	78.3	69.3	62.6	57.3	51.1	43.3	38.3	31.5
		080	279	221	209	185	167	153	136	115	102	83
		110	687	451	426	377	340	311	277	232	202	156
		140	1110	754	713	629	566	516	455	370	306	189
		180	3510	1910	1810	1600	1430	1300	1130	890	690	280
		250	7170	4480	4220	3710	3300	2970	2530	1810	1120	
	240	063	132	84.5	80.0	70.8	64.7	59.3	52.9	44.9	39.8	33.1
		080	279	226	214	190	173	159	142	120	106	88
		110	687	462	437	387	353	323	288	243	212	169
		140	1110	775	733	648	590	539	477	393	332	229
		180	3510	1980	1870	1650	1500	1370	1200	970	780	430
		250	7170	4620	4360	3840	3470	3140	2710	2050	1450	
	270	063	132	85.8	81.2	71.9	65.9	60.8	54.3	46.2	41.0	34.3
		080	279	231	218	193	177	163	146	124	110	92
		110	687	471	446	394	361	333	297	251	221	179
		140	1110	790	748	661	605	557	494	411	352	257
		180	3510	2030	1920	1700	1550	1420	1260	1030	850	540
		250	7170	4730	4470	3940	3580	3270	2850	2220	1680	590
	300	063	132	86.7	82.1	72.7	66.7	62.1	55.5	47.2	42.0	35.3
		080	279	234	221	196	180	167	149	127	113	95
		110	687	477	452	400	367	341	304	258	228	186
		140	1110	802	759	671	614	571	507	424	367	278
		180	3510	2070	1960	1730	1580	1470	1300	1070	900	620
		250	7170	4810	4540	4010	3660	3380	2960	2350	1860	900
	330	063	132	87.5	82.8	73.3	67.2	62.9	56.4	48.1	42.8	36.1
		080	279	236	223	198	181	170	152	130	115	97
		110	687	482	456	404	370	346	310	263	233	192
		140	1110	811	767	679	622	580	519	436	379	295
		180	3510	2100	1980	1750	1600	1500	1330	1110	940	680
		250	7170	4870	4610	4070	3710	3450	3050	2460	2000	1130
20	120	063	69.4	48.3	45.7	39.0	34.8	31.7	28.1	23.2	19.6	13.6
		080	168	93.4	88.3	75.3	67.0	61.0	53.7	43.4	35.4	20.6
		110	377	265	250	213	189	171	149	117	89	32
	150	063	94.1	68.9	65.2	56.8	50.7	46.4	41.3	34.8	30.3	23.9
		080	168	99.9	94.5	82.2	73.3	67.0	59.3	49.1	41.7	29.5
		110	415	349	344	300	267	243	215	177	148	98
		140	1110	707	668	580	514	466	405	314	236	
		180	2560	1440	1350	1170	1030	920	770	530	280	
		250	7170	4170	3910	3360	2920	2570	2080	1150		
	180	063	94.1	71.7	67.9	60.1	53.7	49.2	43.9	37.1	32.6	26.5
		080	190	167	167	158	141	129	115	97	85	68
		110	415	365	361	319	285	261	231	192	165	121
		140	1110	745	704	622	553	504	442	356	286	156
		180	2560	1530	1440	1270	1120	1010	870	650	450	
		250	7170	4420	4160	3650	3210	2870	2410	1620	840	
	210	063	94.1	73.6	69.7	61.7	55.9	51.2	45.7	38.8	34.3	28.2
		080	190	172	172	163	148	136	121	102	90	74
		110	687	460	435	385	349	319	284	239	208	163
		140	1110	770	729	644	582	531	469	384	320	209
		180	3510	1970	1860	1640	1480	1340	1180	940	740	350
		250	7170	4590	4330	3810	3420	3080	2640	1930	1280	

Roller gear cam drive (standard housing)

Output torque table

● RGIT (2 dwell)

Cam curve/MS

Index number	Total index angle (deg)	Size	Static rated output torque (N·m)	Rated dynamic output torque (N·m)								
				Input shaft rotational speed (rpm)								
				15	30	45	60	75	100	150	200	300
20	240	063	94.1	74.9	70.9	62.8	57.6	52.8	47.1	40.0	35.5	29.5
		080	190	176	176	167	153	140	125	106	94	78
		110	687	470	445	394	361	331	294	249	218	175
		140	1110	789	746	659	603	552	489	405	344	244
		180	3510	2020	1910	1690	1540	1410	1240	1010	820	490
		250	7170	4720	4450	3920	3570	3230	2800	2150	1580	
	270	063	94.1	75.9	71.8	63.6	58.3	54.1	48.3	41.0	36.5	30.5
		080	190	178	178	169	155	144	128	109	97	81
		110	687	477	452	400	366	339	303	256	226	184
		140	1110	802	759	671	614	568	504	421	362	270
		180	3510	2070	1960	1730	1580	1460	1290	1060	890	590
		250	7170	4810	4540	4010	3650	3350	2930	2310	1790	760
	300	063	94.1	76.6	72.5	64.2	58.8	55.0	49.2	41.9	37.2	31.3
		080	190	180	180	171	157	147	131	112	99	83
		110	687	483	457	404	371	346	309	262	232	191
		140	1110	812	768	679	622	581	517	433	376	289
		180	3510	2100	1990	1760	1610	1500	1330	1100	930	660
		250	7170	4880	4610	4070	3710	3450	3030	2430	1950	1040
	330	063	94.1	77.1	73.0	64.6	59.3	55.4	50.0	42.6	37.9	31.9
		080	190	182	182	173	158	148	134	114	101	85
		110	687	487	461	408	374	349	315	267	237	196
		140	1110	819	775	686	628	587	527	443	387	304
		180	3510	2120	2010	1780	1630	1520	1360	1130	970	720
		250	7170	4930	4660	4120	3760	3500	3110	2530	2070	1260
24	90	063	27.6	21.7	21.3	20.4	19.8	19.2	18.4	16.6	14.0	7.3
	120	063	27.6	23.8	23.8	23.1	22.4	21.9	21.1	19.7	17.6	12.4
		080	119	86.5	81.8	70.3	62.6	57.1	50.3	41.0	33.8	20.9
		110	256	215	215	197	175	159	139	110	85	37
		140	531	438	431	368	324	290	245	169	93	
		180	1450	896	840	709	611	532	414	182		
		250	4680	2420	2250	1870	1570	1310	890			
	150	063	69.4	53.5	50.6	44.5	39.7	36.3	32.3	27.2	23.7	18.5
		080	168	104	98	86	77	70	62	52	45	33
		110	377	298	282	247	220	201	177	146	122	81
		140	877	568	536	469	416	377	328	253	189	
		180	1800	1220	1150	1000	880	790	670	460	250	
		250	4990	3140	2950	2550	2210	1940	1560	820		
	180	063	69.4	55.1	52.1	46.1	41.6	38.1	33.9	28.7	25.2	20.3
		080	168	107	101	90	81	74	66	55	48	38
		110	377	308	291	258	232	212	188	156	134	98
		140	877	589	557	491	441	401	352	283	227	121
		180	1800	1280	1200	1060	950	850	740	550	380	
		250	4990	3280	3080	2700	2390	2130	1780	1170	540	
	210	063	69.4	56.1	53.1	47.0	42.9	39.3	35.1	29.7	26.3	21.6
		080	168	109	103	91	84	77	68	58	51	40
		110	415	388	383	339	310	283	252	212	185	146
		140	877	603	570	504	459	419	370	302	251	161
		180	2560	1650	1560	1370	1250	1130	990	790	630	300
		250	4990	3370	3170	2790	2520	2260	1930	1390	870	

● RGIT (2 dwell)

Cam curve/MS

Index number	Total index angle (deg)	Size	Static rated output torque (N·m)	Rated dynamic output torque (N·m)								
				Input shaft rotational speed (rpm)								
				15	30	45	60	75	100	150	200	300
24	240	063	69.4	56.7	53.7	47.5	43.6	40.3	36.0	30.5	27.1	22.4
		080	168	111	105	93	85	79	70	59	52	43
		110	415	394	389	344	316	292	260	219	193	155
		140	1110	808	764	676	619	571	506	422	362	268
		180	2560	1680	1590	1400	1280	1180	1040	840	690	410
		250	4990	3430	3240	2850	2590	2360	2040	1540	1090	
	270	063	69.4	57.2	54.2	47.9	44.0	41.1	36.7	31.2	27.7	23.1
		080	168	112	106	94	86	80	71	61	54	44
		110	415	398	393	348	319	298	266	225	199	162
		140	1110	818	774	684	627	585	520	436	378	289
		180	2560	1700	1610	1420	1300	1210	1070	880	740	490
		250	4990	3470	3280	2890	2630	2440	2120	1650	1250	
	300	063	69.4	57.6	54.5	48.2	44.2	41.4	37.3	31.7	28.2	23.7
		080	168	112	106	94	86	81	73	62	55	45
		110	415	401	397	351	322	301	271	230	203	167
		140	1110	825	781	691	633	591	531	446	389	306
		180	2560	1720	1630	1440	1320	1230	1100	910	770	550
		250	4990	3510	3310	2920	2660	2470	2180	1740	1370	660
	330	063	69.4	57.8	54.7	48.5	44.4	41.6	37.8	32.2	28.6	24.1
		080	168	113	107	95	87	81	74	63	56	46
		110	415	403	399	353	324	303	275	233	207	172
		140	1110	830	786	695	637	595	540	455	399	319
		180	2560	1740	1640	1450	1330	1240	1120	930	800	590
		250	4990	3530	3340	2950	2690	2500	2240	1800	1460	830
30	90	063	18.0	15.6	15.4	14.8	14.3	13.9	13.2	10.5	8.1	3.3
		080	35.1	29.7	29.4	28.1	27.0	26.1	24.5	21.0	15.9	
		110	229	133	124	105	92	83	69	46	24	
		140	329	268	263	236	204	177	138	61		
		180	696	549	527	429	352	283	167			
		250	2400	1520	1380	1080	820	570				
	120	063	18.0	16.5	16.5	16.1	15.7	15.3	14.7	12.1	10.1	6.6
		080	88.3	68.0	64.3	55.8	49.7	45.3	39.9	32.5	26.8	16.5
		110	229	142	134	116	103	93	81	62	45	
		140	484	380	358	309	272	244	207	144	83	
		180	1150	733	688	586	507	442	346	159		
		250	3410	2090	1940	1640	1380	1160	810			
	150	063	18.0	17.0	17.0	16.9	16.5	16.1	15.6	13.1	11.2	8.3
		080	88.3	70.4	66.6	58.9	52.6	48.1	42.6	35.4	30.2	21.7
		110	229	147	139	123	110	100	88	70	56	30
		140	531	486	480	423	377	342	298	234	179	70
		180	1150	770	724	634	557	496	412	264		
		250	3410	2190	2050	1780	1550	1350	1060	500		
	180	063	18.0	17.3	17.3	17.2	17.1	16.7	16.2	13.7	11.9	9.3
		080	88.3	71.7	67.9	60.1	54.6	50.0	44.4	37.2	32.3	24.7
		110	256	242	242	230	209	191	169	141	122	91
		140	531	499	492	435	394	359	316	255	207	119
		180	1450	1040	980	860	780	700	610	460	320	
		250	3410	2250	2120	1850	1650	1470	1210	750		
	210	063	18.0	17.4	17.4	17.4	17.4	17.2	16.7	14.1	12.4	9.9
		080	88.3	72.6	68.7	60.8	55.7	51.4	45.7	38.5	33.7	26.7
		110	256	246	246	233	213	197	175	147	128	100
		140	531	507	500	442	404	372	328	270	226	150
		180	1450	1060	1000	880	800	740	640	500	380	
		250	4680	2850	2680	2360	2140	1940	1660	1210	780	

Output torque table

● RGIT (2 dwell)

Cam curve/MS

Index number	Total index angle (deg)	Size	Static rated output torque (N·m)	Rated dynamic output torque (N·m)								
				Input shaft rotational speed (rpm)								
				15	30	45	60	75	100	150	200	300
30	240	063	18.0	17.6	17.6	17.5	17.5	17.5	17.0	14.5	12.7	10.4
		080	119	98.3	93.1	82.4	75.5	70.5	62.9	53.3	47.0	38.6
		110	256	248	248	235	216	201	179	151	132	106
		140	531	512	506	447	409	381	338	280	239	171
		180	1450	1070	1010	900	820	760	670	530	430	230
		250	4680	2880	2720	2390	2180	2010	1740	1320	960	
	270	063	18.0	17.6	17.6	17.6	17.6	17.6	17.3	14.7	13.0	10.7
		080	119	98.9	93.6	82.9	76.0	71.0	64.0	54.3	48.1	39.8
		110	256	250	250	237	217	203	183	154	136	110
		140	531	516	510	451	413	385	345	288	249	186
		180	1450	1080	1020	900	830	770	680	560	460	280
		250	4680	2900	2740	2420	2200	2040	1800	1410	1080	420
	300	063	18.0	17.7	17.7	17.7	17.7	17.7	17.5	15.0	13.3	11.0
		080	119	99.3	94.0	83.2	76.3	71.3	64.9	55.2	48.9	40.8
		110	256	251	251	238	218	204	185	157	139	114
		140	531	519	513	453	415	388	351	295	256	198
		180	1450	1090	1030	910	830	780	700	570	480	320
		250	4680	2920	2760	2440	2220	2060	1840	1470	1170	590
	330	063	18.0	17.7	17.7	17.7	17.7	17.7	17.7	15.1	13.4	11.2
		080	119	99.6	94.3	83.5	76.6	71.6	65.6	55.9	49.6	41.5
		110	256	252	252	239	219	205	187	159	141	117
		140	531	521	515	455	417	389	356	300	262	207
		180	1450	1090	1040	920	840	780	710	590	500	350
		250	4680	2930	2770	2450	2240	2080	1880	1520	1240	720
32	90	063	18.0	15.8	15.7	15.1	14.6	14.2	13.5	10.8	8.4	3.8
		080	35.1	30.2	30.0	28.7	27.6	26.7	25.2	21.8	16.9	
		110	163	119	111	94	82	74	62	41	20	
		140	329	274	270	242	210	183	145	70		
		180	696	562	543	443	367	299	186			
		250	2400	1560	1420	1120	860	620				
	120	063	18.0	16.6	16.6	16.3	15.9	15.5	14.9	12.3	10.3	6.9
		080	88.3	68.8	65.0	56.6	50.4	46.0	40.6	33.1	27.5	17.5
		110	229	144	136	118	105	95	82	64	47	
		140	329	294	293	271	239	214	180	124	68	
		180	1150	745	699	599	519	454	360	179		
		250	2400	1690	1570	1320	1110	920	610			
	150	063	18.0	17.1	17.1	17.0	16.7	16.3	15.8	13.2	11.4	8.5
		080	88.3	70.9	67.1	59.3	53.2	48.6	43.1	35.9	30.7	22.4
		110	229	149	141	124	111	101	89	72	58	32
		140	484	400	378	333	297	269	233	180	133	36
		180	1150	778	733	642	566	505	423	279		
		250	3410	2210	2080	1810	1570	1380	1100	560		
	180	063	18.0	17.3	17.3	17.3	17.2	16.9	16.4	13.8	12.0	9.4
		080	88.3	72.1	68.3	60.4	55.1	50.4	44.8	37.6	32.7	25.2
		110	229	151	143	126	115	105	93	76	64	43
		140	484	408	386	341	310	282	247	197	157	80
		180	1150	798	753	662	597	538	461	336	219	
		250	3410	2270	2140	1870	1670	1490	1240	790	340	
	210	063	18.0	17.5	17.5	17.5	17.5	17.3	16.8	14.2	12.5	10.1
		080	88.3	72.9	69.0	61.1	56.0	51.7	46.1	38.8	34.0	27.1
		110	229	153	145	128	117	108	96	80	68	49
		140	484	414	391	346	316	291	257	209	173	108
		180	1150	811	766	674	613	561	487	374	274	
		250	3410	2300	2170	1910	1720	1570	1330	940	570	

● RGIT (2 dwell)

Cam curve/MS

Index number	Total index angle (deg)	Size	Static rated output torque (N·m)	Rated dynamic output torque (N·m)								
				Input shaft rotational speed (rpm)								
				15	30	45	60	75	100	150	200	300
32	240	063	18.0	17.6	17.6	17.6	17.6	17.6	17.1	14.6	12.8	10.5
		080	88.3	73.4	69.5	61.5	56.4	52.7	47.1	39.8	35.0	28.4
		110	229	154	146	129	118	110	98	82	71	54
		140	484	418	395	349	319	297	264	218	184	127
		180	1450	1080	1020	900	820	760	670	540	440	240
		250	3410	2330	2200	1930	1750	1620	1400	1040	720	
	270	063	18.0	17.7	17.7	17.7	17.7	17.6	17.4	14.8	13.1	10.8
		080	88.3	73.8	69.9	61.8	56.7	53.0	47.8	40.6	35.8	29.4
		110	229	155	147	130	119	111	100	84	73	57
		140	484	420	398	351	322	300	269	224	192	140
		180	1450	1090	1030	910	830	770	690	560	470	300
		250	3410	2350	2220	1950	1780	1640	1440	1120	830	
	300	063	18.0	17.7	17.7	17.7	17.7	17.7	17.6	15.0	13.3	11.1
		080	88.3	74.1	70.1	62.1	56.9	53.2	48.5	41.2	36.5	30.2
		110	256	252	252	239	219	204	186	158	140	114
		140	484	422	399	353	323	302	274	229	198	150
		180	1450	1090	1030	910	840	780	700	580	490	330
		250	3410	2360	2230	1960	1790	1660	1480	1170	910	400
	330	063	18.0	17.8	17.8	17.8	17.8	17.7	17.7	15.2	13.5	11.3
		080	88.3	74.3	70.3	62.2	57.1	53.3	48.9	41.7	37.0	30.8
		110	256	252	252	239	220	205	188	160	142	117
		140	484	423	401	354	325	303	277	233	203	157
		180	1450	1100	1040	920	840	780	710	590	510	360
		250	3410	2370	2240	1970	1800	1670	1510	1210	970	520
36	90	080	35.1	31.1	31.0	29.7	28.7	27.7	26.3	23.2	18.5	
		110	163	122	115	97	86	77	65	45	25	
		140	296	178	166	138	117	100	72			
		180	696	584	567	467	392	325	219			
		250	1950	1270	1160	910	690	480				
	120	080	35.1	32.7	32.6	32.2	31.2	30.4	29.2	26.9	23.4	14.7
		110	163	128	121	106	94	85	74	57	43	
		140	329	300	299	279	246	221	188	134	81	
		180	696	626	614	528	458	401	318	158		
		250	2400	1730	1610	1370	1160	970	680			
	150	080	35.1	33.5	33.4	33.4	32.8	32.0	30.9	29.0	26.0	18.8
		110	163	132	125	110	99	90	79	64	52	29
		140	329	310	309	292	262	237	206	158	117	32
		180	696	649	638	559	496	442	370	243		
		250	2400	1790	1680	1460	1280	1110	880	410		
	180	080	35.1	34.0	33.9	33.9	33.8	33.1	32.1	30.4	27.6	21.2
		110	163	134	126	112	102	93	82	68	57	38
		140	329	315	315	298	272	247	217	173	138	70
		180	696	662	653	573	520	469	401	292	189	
		250	2400	1830	1720	1500	1350	1200	990	610	220	
	210	080	35.1	34.2	34.2	34.2	34.1	33.9	32.9	31.3	28.7	22.8
		110	229	154	146	129	118	110	97	81	70	52
		140	329	319	318	301	275	255	225	183	151	94
		180	1150	819	773	681	620	571	497	387	293	101
		250	2400	1850	1740	1530	1380	1260	1060	740	420	
	240	080	35.1	34.4	34.4	34.4	34.4	34.3	33.6	32.1	29.6	23.9
		110	229	155	147	130	119	111	99	83	72	56
		140	329	321	321	304	278	259	231	190	160	110
		180	1150	825	780	688	628	583	514	411	326	164
		250	2400	1870	1760	1550	1400	1290	1120	820	550	

Roller gear cam drive (standard housing)

Output torque table

● RGIT (2 dwell)

Cam curve/MS

Index number	Total index angle (deg)	Size	Static rated output torque (N·m)	Rated dynamic output torque (N·m)								
				Input shaft rotational speed (rpm)								
				15	30	45	60	75	100	150	200	300
36	270	080	35.1	34.6	34.6	34.5	34.5	34.5	34.1	32.7	30.2	24.7
		110	229	156	147	130	119	111	101	85	74	59
		140	329	323	322	305	280	261	235	196	167	122
		180	1150	830	785	693	633	588	528	428	350	209
		250	2400	1880	1770	1560	1420	1310	1160	880	640	
	300	080	35.1	34.7	34.7	34.7	34.6	34.6	34.5	33.2	30.7	25.4
		110	229	156	148	131	120	112	102	86	76	61
		140	329	324	323	307	281	262	239	200	173	130
		180	1150	834	789	697	637	593	537	441	368	241
		250	2400	1890	1780	1570	1430	1320	1180	930	710	270
	330	080	35.1	34.8	34.7	34.7	34.7	34.7	34.6	33.6	31.2	25.9
		110	229	156	148	131	120	112	103	88	77	63
		140	329	325	324	308	282	263	240	203	177	137
		180	1150	837	791	699	640	596	541	452	382	266
		250	2400	1890	1790	1580	1440	1330	1200	960	760	380
40	90	080	23.0	21.0	20.9	20.2	19.4	18.7	17.6	13.0	8.7	
		110	121	93.3	87.8	74.6	65.5	58.5	48.9	32.3	15.4	
		140	296	182	170	143	122	105	79			
		180	636	491	456	376	313	256	165			
		250	1550	996	902	700	520	338				
	120	080	23.0	21.9	21.8	21.6	20.9	20.3	19.4	15.5	12.2	5.8
		110	121	97.2	91.8	80.5	71.2	64.4	55.7	42.2	30.2	
		140	296	191	180	156	137	121	100	61		
		180	636	520	488	421	363	316	246	108		
		250	1950	1390	1290	1090	920	760	520			
	150	080	23.0	22.3	22.2	22.2	21.9	21.3	20.5	16.9	14.0	9.0
		110	163	133	126	111	100	91	80	65	54	32
		140	296	195	184	162	145	130	111	80		
		180	696	657	647	567	507	453	382	261		
		250	1950	1420	1330	1160	1010	880	680	280		
	180	080	23.0	22.5	22.5	22.4	22.4	22.0	21.3	17.7	15.1	10.8
		110	163	134	127	112	103	94	84	69	58	40
		140	329	318	317	300	274	251	221	178	143	79
		180	696	668	659	579	526	477	411	305	208	
		250	1950	1450	1360	1190	1060	950	770	450		
	210	080	23.0	22.6	22.6	22.6	22.5	22.5	21.8	18.3	15.8	12.0
		110	163	135	128	113	104	97	86	72	61	46
		140	329	320	320	303	277	258	228	187	156	101
		180	696	675	666	587	534	494	430	334	251	
		250	1950	1460	1380	1210	1090	990	830	560	280	
	240	080	23.0	22.7	22.7	22.7	22.7	22.6	22.2	18.8	16.4	12.8
		110	163	136	129	114	104	97	88	73	64	49
		140	329	322	322	305	279	260	233	193	164	116
		180	696	680	671	592	540	501	444	354	280	136
		250	1950	1470	1390	1220	1100	1010	880	630	400	
	270	080	23.0	22.8	22.8	22.8	22.7	22.7	22.6	19.1	16.8	13.4
		110	163	137	129	114	105	98	89	75	66	52
		140	329	324	323	307	281	262	238	198	170	126
		180	696	683	675	596	544	506	455	368	301	176
		250	1950	1480	1400	1230	1110	1030	910	680	480	
	300	080	23.0	22.8	22.8	22.8	22.8	22.8	22.7	19.4	17.1	13.8
		110	163	137	130	115	105	98	90	76	67	54
		140	329	325	324	308	282	263	240	202	175	134
		180	696	686	677	598	547	509	461	380	316	204
		250	1950	1480	1400	1230	1120	1040	930	720	540	

● RGIT (2 dwell)

Cam curve/MS

Index number	Total index angle (deg)	Size	Static rated output torque (N·m)	Rated dynamic output torque (N·m)								
				Input shaft rotational speed (rpm)								
				15	30	45	60	75	100	150	200	300
40	330	080	23.0	22.9	22.9	22.9	22.8	22.8	22.8	19.7	17.4	14.2
		110	163	137	130	115	105	98	90	77	68	55
		140	329	325	325	308	282	264	241	205	179	140
		180	696	688	679	600	549	511	464	389	328	226
		250	2400	1900	1790	1580	1440	1340	1210	980	790	430
48	90	110	48.1	44.7	44.3	42.7	40.7	38.7	35.2	26.7	14.4	
		140	211	165	154	130	112	97	74			
		180	432	389	382	342	286	238	159			
		250	938	846	804	635	479	324				
	120	110	48.1	46.1	45.9	45.6	44.1	42.5	40.0	34.5	26.3	
		140	211	170	160	140	123	110	91	58		
		180	432	407	403	375	326	285	224	107		
		250	938	884	855	723	599	485	295			
	150	110	48.1	46.8	46.7	46.5	46.1	44.7	42.7	38.5	32.2	16.2
		140	211	173	163	144	130	117	100	73	47	
		180	432	416	413	387	348	310	258	166	71	
		250	1550	1100	1030	890	780	680	520	190		
	180	110	121	101	96	85	77	72	63	52	44	29
		140	211	175	165	145	132	122	106	81	60	
		180	432	421	419	394	357	326	278	200	125	
		250	1550	1110	1050	910	810	730	590	330		
	210	110	121	102	96	85	78	73	65	54	46	34
		140	211	176	166	147	134	124	109	87	68	
		180	432	424	422	398	362	334	291	221	158	
		250	1550	1120	1060	920	830	760	640	420	190	
	240	110	121	102	97	85	78	73	66	55	48	36
		140	211	177	167	147	135	125	112	91	74	43
		180	432	426	425	401	365	338	301	236	181	70
		250	1550	1130	1060	930	840	770	670	470	290	
	270	110	121	102	97	86	78	73	67	56	49	39
		140	211	177	167	148	135	126	114	94	78	51
		180	432	427	426	403	368	341	307	247	197	101
		250	1550	1130	1070	940	850	780	690	520	350	
	300	110	121	102	97	86	79	73	67	57	50	40
		140	211	177	168	148	136	126	115	96	82	57
		180	432	428	427	405	369	343	310	255	209	124
		250	1550	1130	1070	940	860	790	700	550	400	
	330	110	121	103	97	86	79	74	67	58	51	41
		140	211	178	168	148	136	127	115	98	84	61
		180	432	429	428	406	371	345	312	262	218	141
		250	1550	1130	1070	940	860	800	710	570	440	170

Roller gear cam drive (standard housing)

Output torque table

● RGIT (3 dwell)

Cam curve/MS

Index number	Total index angle (deg)	Size	Static rated output torque (N·m)	Rated dynamic output torque (N·m)								
				Input shaft rotational speed (rpm)								
				10	20	30	40	50	70	100	140	200
24	180	063	132	77.9	73.7	65.2	58.8	53.9	47.1	40.7	35.2	29.5
		080	190	157	157	149	134	123	107	93	80	66
		110	415	344	340	301	271	248	215	184	154	119
	210	063	132	80.8	76.5	67.7	61.9	56.7	49.7	43.0	37.3	31.7
		080	279	215	203	180	165	151	132	114	99	84
		110	687	438	415	367	335	307	268	230	197	160
		140	1110	732	692	612	558	509	441	371	302	214
		180	2560	1490	1410	1250	1130	1030	880	710	530	250
		250	7170	4330	4090	3600	3260	2940	2470	1900	1210	
	240	063	132	83.0	78.5	69.5	63.8	59.0	51.6	44.8	39.0	33.3
		080	279	222	210	186	170	157	138	119	104	88
		110	687	452	428	379	347	321	280	242	208	172
		140	1110	756	716	633	579	534	464	394	328	248
		180	3510	1920	1820	1610	1470	1350	1170	970	780	510
		250	7170	4500	4250	3740	3410	3120	2650	2120	1510	570
	270	063	132	84.5	80.0	70.8	65.0	60.7	53.2	46.2	40.3	34.5
		080	279	226	214	190	174	163	142	124	108	92
		110	687	462	438	387	355	332	290	251	217	182
		140	1110	775	733	648	594	554	482	412	347	272
		180	3510	1980	1870	1660	1510	1410	1220	1030	840	610
		250	7170	4620	4370	3860	3520	3260	2790	2280	1730	910
	300	063	132	85.7	81.1	71.8	65.9	61.6	54.5	47.3	41.3	35.5
		080	279	230	218	193	177	165	146	127	111	95
		110	687	470	445	394	361	337	298	258	224	189
		140	1110	789	746	660	605	565	497	426	363	291
		180	3510	2030	1920	1690	1550	1450	1270	1080	900	680
		250	7170	4720	4460	3940	3600	3340	2900	2410	1890	1170
	330	063	132	86.6	81.9	72.6	66.5	62.2	55.5	48.2	42.1	36.3
		080	279	233	221	195	179	168	149	130	113	98
		110	687	476	451	399	366	342	305	264	229	195
		140	1110	800	757	670	614	573	509	438	375	306
		180	3510	2060	1950	1720	1580	1470	1300	1110	940	730
		250	7170	4790	4530	4010	3660	3410	3000	2510	2010	1360
30	150	063	94.1	68.9	65.2	57.7	51.7	47.3	41.4	35.7	30.7	25.5
		080	168	99.9	94.5	83.6	74.8	68.4	59.5	50.9	42.8	33.5
		110	377	285	270	238	213	194	169	142	117	84
		140	877	541	511	451	401	364	310	251	184	
	180	063	94.1	71.8	67.9	60.1	54.8	50.2	43.9	38.0	32.9	27.7
		080	190	167	167	158	144	132	115	100	86	72
		110	415	366	361	320	291	266	232	199	169	135
		140	1110	745	705	623	566	516	446	375	303	209
		180	2560	1530	1440	1270	1150	1040	890	720	520	220
		250	4990	3150	2960	2600	2330	2090	1710	1230	590	
	210	063	94.1	73.6	69.7	61.7	56.6	52.2	45.7	39.6	34.4	29.3
		080	190	172	172	163	150	138	121	105	91	77
		110	687	460	435	385	353	326	285	245	211	174
		140	1110	771	729	645	590	543	471	400	332	249
		180	3510	1970	1860	1640	1500	1380	1190	990	790	520
		250	7170	4590	4340	3820	3480	3180	2700	2150	1520	
	240	063	94.1	74.9	70.9	62.8	57.6	53.8	47.1	40.9	35.6	30.5
		080	190	176	176	167	153	143	125	109	94	81
		110	687	470	445	394	361	337	295	255	220	184
		140	1110	789	746	660	604	564	491	419	353	277
		180	3510	2030	1920	1690	1550	1440	1250	1050	860	620
		250	7170	4720	4460	3930	3590	3330	2850	2330	1760	930

RGIT (3 dwell)

Cam curve/MS

Index number	Total index angle (deg)	Size	Static rated output torque (N·m)	Rated dynamic output torque (N·m)								
				Input shaft rotational speed (rpm)								
				10	20	30	40	50	70	100	140	200
30	270	063	94.1	75.9	71.8	63.6	58.3	54.5	48.3	41.9	36.6	31.4
		080	190	178	178	169	155	145	128	111	97	83
		110	687	477	452	400	367	343	303	262	227	192
		140	1110	802	759	671	615	574	506	434	369	297
		180	3510	2070	1960	1730	1580	1480	1300	1100	920	690
		250	7170	4810	4550	4020	3670	3410	2960	2460	1930	1210
	300	063	94.1	76.6	72.5	64.2	58.9	55.0	49.2	42.7	37.3	32.1
		080	190	180	180	171	157	147	131	114	99	86
		110	687	483	457	404	371	347	309	268	233	198
		140	1110	812	768	680	623	582	518	446	382	313
		180	3510	2100	1990	1760	1610	1500	1330	1140	960	750
		250	7170	4880	4610	4080	3730	3470	3060	2560	2070	1410
	330	063	94.1	77.1	73.0	64.6	59.3	55.4	49.9	43.4	37.9	32.7
		080	190	182	182	173	158	148	133	116	101	87
		110	687	487	461	408	374	350	315	273	238	203
		140	1110	819	775	686	629	587	528	455	392	325
		180	3510	2120	2010	1780	1630	1520	1360	1170	990	790
		250	7170	4930	4660	4120	3770	3510	3130	2650	2170	1570
36	120	063	27.6	23.8	23.8	23.5	22.9	22.4	21.5	20.5	18.1	14.1
		080	119	86.5	81.9	71.7	63.9	58.4	50.6	42.8	35.3	25.8
		110	256	215	215	202	179	163	141	117	92	58
	150	063	69.4	53.5	50.7	44.8	40.5	37.1	32.4	27.9	24.0	19.8
		080	168	104	98	87	79	72	63	54	46	37
		110	377	298	282	249	225	205	178	152	126	95
		140	877	568	537	474	426	388	332	273	209	117
		180	1450	962	907	797	711	639	529	393		
		250	4990	3140	2960	2590	2300	2050	1650	1120		
	180	063	69.4	55.1	52.1	46.1	42.3	38.8	33.9	29.4	25.4	21.4
		080	168	107	101	90	82	75	66	57	49	40
		110	377	308	292	258	236	216	189	162	137	109
		140	877	589	557	492	450	411	355	298	240	164
		180	1800	1280	1210	1060	970	880	750	600	440	190
		250	4990	3280	3090	2720	2460	2220	1850	1390	800	
	210	063	69.4	56.1	53.1	47.0	43.1	40.1	35.1	30.4	26.4	22.4
		080	168	109	103	92	84	78	68	59	51	43
		110	415	388	383	339	311	289	253	218	188	156
		140	877	603	571	505	462	428	372	315	261	194
		180	2560	1650	1560	1380	1260	1160	1000	840	670	440
		250	4990	3370	3180	2800	2550	2340	1980	1560	1070	
	240	063	69.4	56.7	53.7	47.5	43.6	40.8	36.0	31.2	27.2	23.2
		080	168	111	105	93	85	79	70	61	53	45
		110	415	394	389	344	316	295	260	225	194	163
		140	1110	808	765	676	620	578	508	436	370	296
		180	2560	1680	1590	1400	1290	1200	1050	880	720	520
		250	4990	3430	3240	2860	2600	2410	2080	1680	1240	590
	270	063	69.4	57.2	54.2	48.0	44.0	41.1	36.7	31.8	27.8	23.8
		080	168	112	106	94	86	80	71	62	54	46
		110	415	398	393	348	319	298	266	230	200	169
		140	1110	818	774	685	628	586	521	448	384	313
		180	2560	1710	1610	1430	1310	1220	1080	920	760	580
		250	4990	3470	3280	2900	2650	2460	2150	1770	1370	810

Roller gear cam drive (standard housing)

Output torque table

Index series

● RGIT (3 dwell)

Cam curve/MS

Index number	Total index angle (deg)	Size	Static rated output torque (N·m)	Rated dynamic output torque (N·m)								
				Input shaft rotational speed (rpm)								
				10	20	30	40	50	70	100	140	200
36	300	063	69.4	57.6	54.5	48.2	44.2	41.4	37.3	32.4	28.3	24.3
		080	168	112	106	94	86	81	73	63	55	47
		110	415	401	397	351	322	301	271	235	204	174
		140	1110	825	781	691	633	592	531	458	394	327
		180	2560	1720	1630	1440	1320	1230	1100	940	790	620
		250	4990	3510	3320	2930	2680	2490	2210	1840	1470	960
	330	063	69.4	57.8	54.7	48.5	44.5	41.6	37.5	32.8	28.7	24.7
		080	168	113	107	95	87	81	73	64	56	48
		110	415	403	399	353	324	303	273	238	208	178
		140	1110	830	786	696	638	596	537	467	403	337
		180	2560	1740	1640	1450	1330	1240	1120	960	820	650
		250	4990	3530	3340	2950	2700	2510	2240	1900	1540	1080
48	90	063	18.0	15.8	15.8	15.4	14.9	14.5	13.7	11.4	9.0	5.8
		080	35.1	30.2	30.1	29.3	28.4	27.6	26.0	23.7	18.8	9.9
		110	163	119	112	96	85	77	64	48	29	
	120	063	18.0	16.6	16.6	16.6	16.2	15.8	15.1	12.8	10.7	8.1
		080	88.3	68.8	65.1	57.5	51.5	47.0	40.8	34.6	28.6	21.2
		110	229	144	136	120	107	98	84	69	52	29
		140	484	385	364	320	285	258	217	170	114	
		180	1150	746	702	614	540	481	384	255		
		250	2400	1690	1590	1370	1180	1020	720			
	150	063	18.0	17.1	17.1	17.1	17.0	16.6	15.9	13.6	11.6	9.4
		080	88.3	70.9	67.1	59.4	54.3	49.6	43.3	37.1	31.4	25.0
		110	229	149	141	124	113	103	90	75	61	43
		140	484	400	378	334	304	276	237	194	148	81
		180	1150	779	734	645	584	526	438	330	194	
		250	3410	2210	2080	1820	1640	1460	1170	780	250	
	180	063	18.0	17.3	17.3	17.3	17.3	17.2	16.5	14.2	12.2	10.1
		080	88.3	72.1	68.3	60.4	55.4	51.4	44.9	38.7	33.1	27.2
		110	229	151	143	127	116	107	93	79	66	50
		140	484	409	386	341	312	289	249	209	167	112
		180	1150	798	754	664	605	556	471	375	262	
		250	3410	2270	2140	1880	1700	1560	1290	960	530	
	210	063	18.0	17.5	17.5	17.5	17.5	17.5	16.9	14.6	12.6	10.6
		080	88.3	72.9	69.0	61.1	56.0	52.3	46.1	39.8	34.4	28.7
		110	229	153	145	128	117	109	96	82	70	55
		140	484	414	392	346	317	295	258	219	180	132
		180	1150	811	767	676	617	572	494	404	306	163
		250	3410	2310	2180	1920	1740	1610	1370	1070	710	
	240	063	18.0	17.6	17.6	17.6	17.6	17.6	17.2	14.9	12.9	11.0
		080	88.3	73.4	69.5	61.5	56.4	52.7	47.1	40.7	35.3	29.8
		110	229	154	146	129	118	110	98	85	72	59
		140	484	418	395	349	320	298	265	226	189	146
		180	1450	1080	1020	900	820	770	680	570	460	320
		250	3410	2330	2200	1940	1770	1640	1420	1150	830	360
	270	063	18.0	17.7	17.7	17.7	17.7	17.7	17.5	15.1	13.2	11.2
		080	88.3	73.8	69.9	61.8	56.7	53.0	47.8	41.5	36.0	30.6
		110	229	155	147	130	119	111	100	86	74	61
		140	484	420	398	352	322	301	270	232	196	156
		180	1450	1090	1030	910	830	780	690	590	490	360
		250	3410	2350	2220	1960	1790	1660	1460	1200	920	510

RGIT (3 dwell)

Cam curve/MS

Index number	Total index angle (deg)	Size	Static rated output torque (N·m)	Rated dynamic output torque (N·m)								
				Input shaft rotational speed (rpm)								
				10	20	30	40	50	70	100	140	200
48	300	063	18.0	17.7	17.7	17.7	17.7	17.7	17.5	15.4	13.4	11.5
		080	88.3	74.1	70.1	62.1	56.9	53.2	48.0	42.1	36.6	31.3
		110	229	156	147	130	119	112	101	88	76	63
		140	484	422	399	353	324	302	272	236	201	163
		180	1450	1090	1030	910	840	780	700	600	500	390
		250	3410	2360	2230	1970	1800	1670	1480	1250	980	620
	330	063	18.0	17.8	17.8	17.8	17.8	17.8	17.6	15.5	13.6	11.6
		080	88.3	74.3	70.3	62.2	57.1	53.4	48.2	42.6	37.1	31.8
		110	229	156	148	131	120	112	101	89	77	65
		140	484	423	401	355	325	304	273	240	206	169
		180	1450	1100	1040	920	840	790	710	610	520	410
		250	3410	2370	2240	1980	1810	1680	1500	1280	1030	710

Roller gear cam drive (standard housing)

Output torque table

Index series

● RGIT (4 dwell)

Cam curve/MS

Index number	Total index angle (deg)	Size	Static rated output torque (N·m)	Rated dynamic output torque (N·m)								
				Input shaft rotational speed (rpm)								
				10	15	20	30	40	50	75	100	150
32	210	063	132	80.8	76.5	70.2	62.1	56.1	51.3	43.7	38.8	32.5
	240	063	132	83.0	78.5	72.0	63.8	58.2	53.4	45.4	40.4	34.0
		080	279	222	210	192	170	156	142	121	108	90
		110	687	452	428	392	347	317	290	246	217	178
		140	1110	756	716	656	580	528	482	404	350	268
	270	063	132	84.5	80.0	73.4	65.0	59.6	55.0	46.8	41.7	35.2
		080	279	226	214	197	174	160	147	125	112	94
		110	687	462	438	401	355	325	300	255	226	187
		140	1110	775	733	672	594	544	500	421	368	290
		180	3510	1980	1870	1720	1520	1390	1270	1060	910	670
		250	7170	4620	4370	4000	3530	3210	2930	2380	1960	1200
	300	063	132	85.7	81.1	74.4	65.9	60.4	56.3	47.9	42.7	36.2
		080	279	230	218	200	177	162	151	129	115	97
		110	687	470	445	408	361	331	308	262	233	194
		140	1110	789	746	684	605	554	515	435	382	306
		180	3510	2030	1920	1760	1550	1420	1320	1100	960	730
		250	7170	4720	4460	4090	3610	3290	3030	2490	2090	1400
	330	063	132	86.6	81.9	75.2	66.5	61.0	57.1	48.9	43.6	37.0
		080	279	233	221	202	179	164	154	132	117	99
		110	687	476	451	413	366	335	313	268	238	200
		140	1110	799	757	694	614	562	525	446	393	319
		180	3510	2060	1950	1790	1580	1450	1350	1140	990	780
		250	7170	4790	4540	4160	3670	3350	3110	2590	2200	1560
36	180	063	94.1	70.2	66.5	60.9	53.9	48.2	44.2	37.5	33.3	27.6
	210	063	132	82.7	78.3	71.8	63.6	57.7	52.8	45.0	40.0	33.5
		080	190	169	169	166	147	133	122	104	92	77
		110	415	369	365	335	296	268	246	208	183	148
		140	1110	754	713	654	577	522	476	397	343	257
	240	063	132	84.5	80.0	73.4	65.0	59.6	54.7	46.5	41.4	34.9
		080	279	226	214	197	174	160	146	125	111	93
		110	687	462	438	401	355	325	298	253	224	185
		140	1110	775	733	672	594	543	497	417	363	283
		180	2560	1600	1510	1380	1220	1110	1010	840	710	490
		250	7170	4620	4370	4000	3520	3200	2900	2340	1900	1080
	270	063	132	85.8	81.2	74.5	66.0	60.5	56.1	47.8	42.6	36.0
		080	279	231	218	200	177	163	151	128	114	97
		110	687	471	446	409	362	332	307	261	232	193
		140	1110	790	748	686	606	555	513	433	379	302
		180	3510	2030	1920	1760	1560	1420	1310	1100	950	720
		250	7170	4730	4470	4100	3610	3290	3020	2470	2060	1330
	300	063	132	86.7	82.1	75.3	66.7	61.2	57.2	48.8	43.5	36.9
		080	279	234	221	203	180	165	154	131	117	99
		110	687	477	452	414	367	336	314	268	238	199
		140	1110	802	759	696	616	564	526	445	392	317
		180	3510	2070	1960	1790	1590	1450	1350	1140	990	770
		250	7170	4810	4550	4170	3680	3360	3110	2580	2180	1520
	330	063	132	87.5	82.8	76.0	67.3	61.7	57.7	49.7	44.3	37.6
		080	279	236	223	205	181	166	156	134	120	101
		110	687	482	456	419	371	340	318	273	243	204
		140	1110	811	767	704	623	570	532	456	402	329
		180	3510	2100	1980	1820	1610	1470	1370	1170	1020	810
		250	7170	4870	4610	4230	3730	3410	3160	2660	2280	1660

● RGIT (4 dwell)

Cam curve/MS

Index number	Total index angle (deg)	Size	Static rated output torque (N·m)	Rated dynamic output torque (N·m)								
				Input shaft rotational speed (rpm)								
				10	15	20	30	40	50	75	100	150
40	180	063	94.1	71.7	67.9	62.3	55.1	49.6	45.4	38.6	34.2	28.5
		080	168	104	98	90	80	72	66	55	49	40
		110	415	365	361	331	293	263	240	203	178	142
		140	877	568	537	492	434	388	352	290	244	165
	210	063	94.1	73.6	69.7	63.9	56.6	51.6	47.3	40.2	35.8	30.0
		080	190	172	172	169	150	137	125	106	94	79
		110	687	460	435	399	353	322	294	250	220	181
		140	1110	771	729	668	591	537	490	410	355	271
		180	2560	1590	1500	1380	1210	1100	1000	820	680	450
		250	4990	3260	3080	2820	2470	2220	1990	1540	1160	
	240	063	94.1	74.9	70.9	65.1	57.6	52.8	48.7	41.5	36.9	31.1
		080	190	176	176	173	153	140	129	110	98	82
		110	687	470	445	408	361	331	305	259	229	190
		140	1110	789	746	684	605	554	509	428	374	295
		180	3510	2020	1920	1760	1550	1420	1300	1080	930	690
		250	7170	4720	4460	4090	3600	3270	2990	2430	2000	1220
	270	063	94.1	75.9	71.8	65.9	58.3	53.5	49.8	42.5	37.9	32.0
		080	190	178	178	176	155	142	133	113	101	85
		110	687	477	452	414	367	336	313	266	236	197
		140	1110	802	759	696	615	563	524	442	388	312
		180	3510	2070	1960	1790	1580	1450	1340	1130	980	750
		250	7170	4810	4550	4170	3680	3350	3100	2550	2140	1440
	300	063	94.1	76.6	72.5	66.5	58.9	54.0	50.5	43.3	38.6	32.7
		080	190	180	180	177	157	144	135	116	103	87
		110	687	483	457	419	371	340	318	272	242	203
		140	1110	812	768	705	623	571	533	454	400	326
		180	3510	2100	1990	1820	1610	1470	1370	1160	1020	800
		250	7170	4880	4620	4230	3730	3410	3160	2640	2250	1610
	330	063	94.1	77.1	73.0	66.9	59.3	54.4	50.8	44.0	39.2	33.3
		080	190	182	182	179	158	145	136	118	105	89
		110	687	487	461	423	374	343	321	277	247	208
		140	1110	819	775	711	629	576	538	463	409	336
		180	3510	2120	2010	1840	1630	1490	1390	1190	1050	840
		250	7170	4930	4670	4280	3780	3450	3210	2720	2340	1740
48	150	063	69.4	53.5	50.7	46.5	41.0	36.6	33.5	28.4	25.1	20.6
		080	168	104	98	90	80	71	65	55	48	38
		110	256	228	227	223	197	175	160	134	115	87
		140	531	466	460	421	370	328	297	241	197	116
	180	063	69.4	55.1	52.1	47.8	42.3	38.3	35.1	29.8	26.4	22.0
		080	168	107	101	93	82	75	68	58	51	42
		110	415	379	375	343	304	275	252	213	187	151
		140	877	589	557	511	451	407	370	307	262	187
		180	1800	1280	1210	1100	970	870	790	630	510	280
		250	4990	3280	3100	2830	2480	2210	1970	1510	1090	
	210	063	69.4	56.1	53.1	48.7	43.1	39.5	36.3	30.9	27.4	23.0
		080	168	109	103	95	84	77	71	60	53	44
		110	415	388	383	351	311	285	261	222	196	161
		140	877	603	571	523	462	423	386	323	279	212
		180	2560	1650	1560	1430	1260	1150	1050	870	730	510
		250	4990	3370	3180	2910	2560	2320	2090	1660	1290	580

Roller gear cam drive (standard housing)

Output torque table

● RGIT (4 dwell)

Cam curve/MS

Index number	Total index angle (deg)	Size	Static rated output torque (N·m)	Rated dynamic output torque (N·m) Input shaft rotational speed (rpm) 10	15	20	30	40	50	75	100	150
48	240	063	69.4	56.7	53.7	49.3	43.6	40.0	37.2	31.6	28.2	23.7
		080	168	111	105	96	85	78	72	62	55	46
		110	415	394	389	357	316	289	269	228	203	168
		140	1110	808	765	701	620	568	527	444	390	312
		180	2560	1680	1590	1460	1290	1180	1090	910	780	580
		250	4990	3430	3240	2970	2610	2370	2180	1760	1430	820
	270	063	69.4	57.2	54.2	49.7	44.0	40.3	37.7	32.3	28.8	24.3
		080	168	112	106	97	86	79	74	63	56	47
		110	415	398	393	361	319	293	274	234	208	174
		140	1110	818	774	710	628	575	537	456	402	327
		180	2560	1700	1610	1480	1310	1200	1110	940	810	620
		250	4990	3470	3280	3010	2650	2420	2240	1840	1530	990
	300	063	69.4	57.6	54.5	50.0	44.3	40.6	37.9	32.8	29.3	24.8
		080	168	112	106	98	86	79	74	64	57	48
		110	415	401	397	364	322	295	276	238	212	178
		140	1110	825	781	716	634	581	542	466	412	338
		180	2560	1720	1630	1500	1320	1210	1130	960	840	660
		250	4990	3510	3320	3040	2680	2440	2270	1900	1610	1120
	330	063	69.4	57.8	54.7	50.2	44.5	40.8	38.1	33.3	29.7	25.2
		080	168	113	107	98	87	80	74	65	58	49
		110	415	403	399	366	324	297	278	242	215	181
		140	1110	830	786	721	638	585	546	474	420	348
		180	2560	1740	1640	1510	1330	1220	1140	980	860	690
		250	4990	3530	3340	3060	2700	2470	2290	1950	1670	1210

Roller gear cam drive (standard housing)

Output torque table

Reducer series

● RGCT

Cam curve/CV

Reduction ratio	Total index angle (deg)	Size	Static rated output torque (N·m)	Rated dynamic output torque (N·m)								
				Input shaft rotational speed (rpm)								
				30	60	90	120	150	200	300	400	600
4	360	063	132	86.2	81.6	72.3	66.3	62.0	56.9	50.4	46.2	40.9
		080	190	177	177	168	154	144	132	117	107	95
		110	687	474	448	397	364	341	312	277	254	225
		140	1110	795	753	667	611	572	525	465	426	377
		180	3510	2050	1940	1720	1570	1470	1350	1200	1100	970
		250	7170	4770	4510	3990	3660	3430	3140	2780	2550	2260
5	360	063	94.1	76.9	72.8	64.4	59.1	55.3	50.7	44.9	41.2	36.5
		080	168	111	106	93	86	80	74	65	60	53
		110	415	397	393	348	319	298	274	242	222	197
		140	1110	816	773	684	628	587	538	477	437	387
		180	2560	1700	1610	1430	1310	1220	1120	990	910	810
		250	4990	3470	3280	2910	2670	2490	2290	2030	1860	1650
6	360	063	69.4	57.7	54.6	48.4	44.4	41.5	38.1	33.7	30.9	27.4
		080	168	113	107	94	87	81	74	66	60	53
		110	377	326	309	273	251	234	215	190	175	155
		140	877	627	594	526	483	451	414	367	336	298
		180	1800	1380	1300	1150	1060	990	910	800	740	650
		250	4990	3520	3330	2950	2710	2530	2320	2060	1890	1670
8	360	063	132	89.9	85.1	75.3	69.1	64.6	59.3	52.5	48.2	42.6
		080	279	244	231	205	188	175	161	143	131	116
		110	687	499	472	418	383	359	329	291	267	237
		140	1110	841	796	705	647	605	555	491	451	399
		180	3510	2200	2080	1840	1690	1580	1450	1280	1180	1040
		250	7170	5090	4810	4260	3910	3660	3360	2970	2730	2410
9	360	063	132	90.2	85.4	75.6	69.3	64.8	59.5	52.7	48.3	42.8
		080	279	245	232	205	188	176	162	143	131	116
		110	687	501	474	420	385	360	330	292	268	238
		140	1110	844	799	708	649	607	557	493	453	401
		180	3510	2210	2090	1850	1700	1590	1460	1290	1180	1050
		250	7170	5110	4840	4280	3930	3680	3370	2990	2740	2420
10	360	063	94.1	79.0	74.8	66.2	60.7	56.8	52.1	46.1	42.3	37.5
		080	190	188	188	178	163	153	140	124	114	101
		110	687	502	475	421	386	361	331	293	269	238
		140	1110	847	802	710	651	609	559	495	454	402
		180	3510	2220	2100	1860	1700	1590	1460	1290	1190	1050
		250	7170	5130	4860	4300	3940	3690	3380	3000	2750	2430
12	360	063	69.4	58.8	55.6	49.3	45.2	42.3	38.8	34.3	31.5	27.9
		080	168	115	109	96	88	83	76	67	62	55
		110	415	412	408	361	331	310	284	251	231	204
		140	1110	850	805	713	654	612	561	497	456	403
		180	2560	1790	1690	1500	1380	1290	1180	1040	960	850
		250	4990	3620	3430	3040	2780	2600	2390	2120	1940	1720

Roller gear cam drive

Wide angle

Index	RGIL	063 to 250
Oscillator	RGOL	

● Common specifications

1. Installation position

For the positions of the oil fill/drain ports and the oil level gauge, refer to the dimensions page for each size.

Depending on position of index drive, oil supply port, drain port and oil level gauge are located at different positions. You need to choose 1 of the correct positions from (1) to (6).

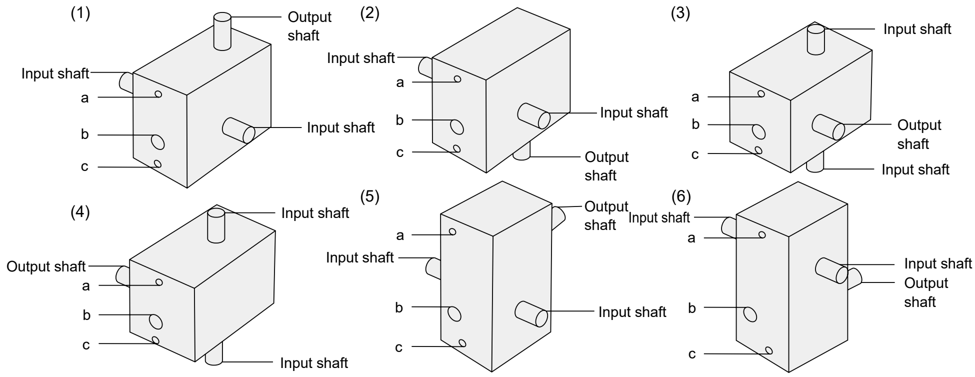

a: Oil supply port b: Oil level gauge c: Drain port

2. Housing mounting holes: mounting holes all machined on the 6 faces of the housing.

3. Housing material/Fc

4. Housing dowel pin hole dimensions (custom order)

When housing dowel pin holes are added, the dimensions below should be standard:

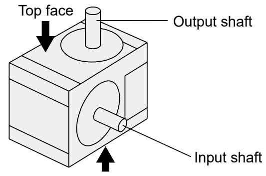

Position 1

Size	063	080	110	140	180	250
Top face	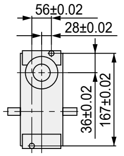	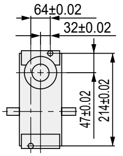	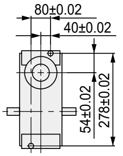	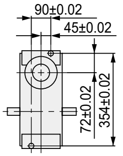	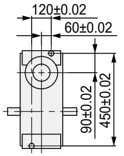	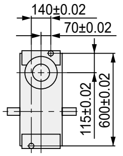
Bottom face	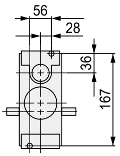	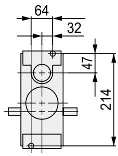	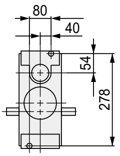	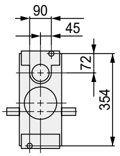	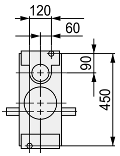	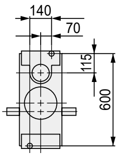
Standard hole diameter	2-ø6H7 depth 9	2-ø8H7 depth 12	2-ø10H7 depth 15	2-ø13H7 depth 20	2-ø13H7 depth 20	2-ø16H7 depth 24

* For the tolerance of positioning pins on the lower face, contact CKD.

5. Diameter of the stepped section of the input/output shaft

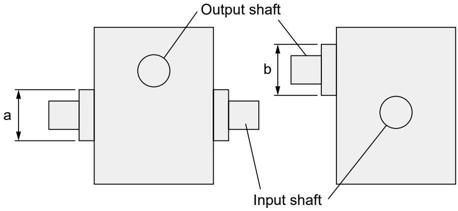

Dimensions / Size	a	b
063	ø 17	ø 20
080	ø 25	ø 25
110	ø 28	ø 30
140	ø 32	ø 35
180	ø 42	ø 42
250	ø 55	ø 55

6. Optional worm reducer

Standard worm reducers

Main model No.		HO reducer size	Reduction ratio Value in ( ) represents the special reduction ratio.	TE reducer side	Reduction ratio
RGIL **RGOL**	**063**	HO 32	1/20, 1/40, 1/60 (1/30, 1/50)	TE 35	1/10, 1/20, 1/30 1/40, 1/50, 1/60
	080	HO 40	1/20, 1/40, 1/60 (1/30, 1/50)	TE 42	1/10, 1/20, 1/30 1/40, 1/50, 1/60
	110	HO 50	1/20, 1/30, 1/40 1/50, 1/60	TE 51	1/10, 1/20, 1/30 1/40, 1/50, 1/60
	140	HO 60	1/20, 1/30, 1/40 1/50, 1/60	TE 63	1/10, 1/20, 1/30 1/40, 1/50, 1/60
	180	HO 80	1/20, 1/30, 1/40 1/50, 1/60	TE 80	1/10, 1/20, 1/30 1/40, 1/50, 1/60
	250	HO 100	1/20, 1/30, 1/40 1/50, 1/60	TE 100	1/10, 1/20, 1/30 1/40, 1/50, 1/60

* The above indicates the combinations of standard installations.
Check the reducer load torque (Ter) and the reducer rated output torque before use.

7.Option/Input shaft - with rotation detection cam + proximity switch

Proximity switch model No.

Body shaft inteval	SW model No.	Manufacturer
063 ～ **110**	E2S-Q23	OMRON
140 ～ **250**	E2E-X2E1	

8.Optional torque saver (TSF4 - TSF14) Torque guard (TGX20 - TGX70) + release detection proximity switch

Proximity switch model No.

Torque saver Torque guard	SW model No.	Manufacturer
TSF4	TL-W3MC1	OMRON
TSF5 ～ TSF14	TL-W5MC1	
TGX20 ～ TGX70		

Roller gear cam drive

Wide angle

1. Standard model No. Index series

RGIL **140** – **002** **120** **S** **1** **S** **1**
Ⓐ Ⓑ Ⓒ Ⓓ Ⓔ Ⓕ Ⓖ Ⓗ

Ⓐ Model	Ⓑ Distance between shafts		Ⓒ Indexing number (n)		Ⓓ Total index angle (θt)		Ⓔ Cam curve		Ⓕ Cam helix direction/dwell No.	
RGIL	063	63 mm	002	2	045	45°	S	MS curve (Standard)	1	Left helix/1 dwell
	080	80 mm	003	3	060	60°				
	110	110 mm	004	4	090	90°	C	MC curve (MCV50)	5	Right helix/1 dwell
	140	140 mm	006	6	120	120°	T	MT curve		* For Wide angle, the number of dwell interval is limited to 1.
	180	180 mm	008	8	150	150°				
	250	250 mm			180	180°				
					210	210°				
					240	240°				

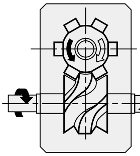
Left helix
(Standard)

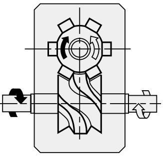
Right helix

For details of the timing chart, refer to B-7.

Example of model No. (1)

RGIL063-003090S5S1

Shaft interval .... 63 mm
Index number 3
Total index angle .... 90°
Cam curve .... MS curve
Spiral direction of the cam .... Right helix
Shape of the output shaft .... Straight
Installation position .... Position #1

Ⓖ Shape of the output shaft		Ⓗ Installation position	
S	Straight	1	Position #1
		2	Position #2
		3	Position #3
		4	Position #4
		5	Position #5
		6	Position #6

■Position #1

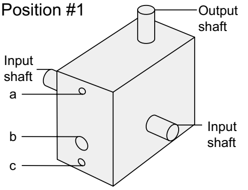

■Position #2

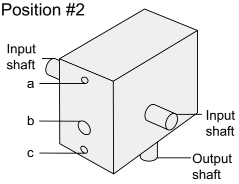

■Position #3

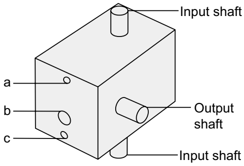

■Position #4

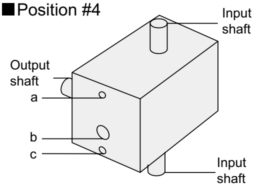

■Position #5

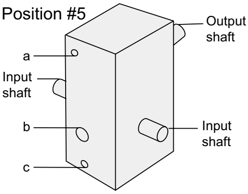

■Position #6

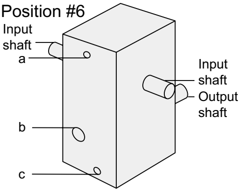

a: Oil supply port b: Oil level gauge c: Drain port

Roller gear cam drive

Wide angle

2-1. Model No. with options

Common for index and oscillating series

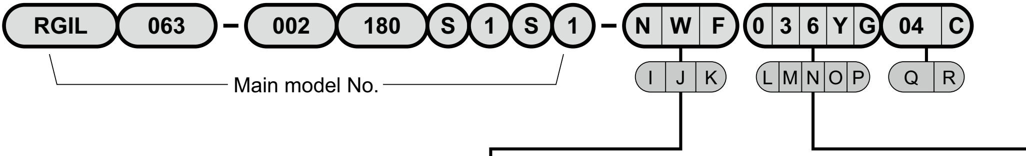

Input/Output shaft specification code					
Ⓘ Input shaft specification code (left shaft)		Ⓙ Input shaft specification code (right shaft)		Ⓚ Output shaft specification code	
N	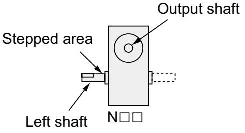	N	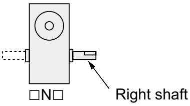	N	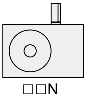
K	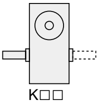	K	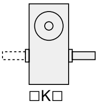	K	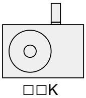
C	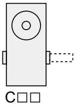	C	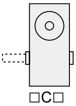	F / A / X / C	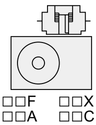
W E	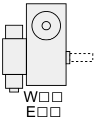	W E	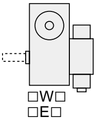	S / B / Y / D	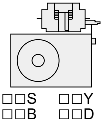 Note 2
J	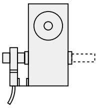 (Proximity switch)	J	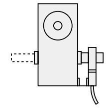 (Proximity switch)		
N	Standard (with keyway)			N	Standard (with keyway)
K	No keyway			K	No keyway (straight shaft)
C	Cutoff * This is cut off at the stepped spot. It will protrude from the housing. Verify the dimensions with the diagram.			F	With Torque saver (TSF)
W	With the worm reducer (W: HO reducer, E: TE reducer)			A	With Torque saver (TSF) (Output shaft without keyway)
E	* Since the specification for the worm reducer is required, determine "Worm reducer installation specification code."			X	With Torque guard (TGX)
J	Input shaft - with rotation detection cam + proximity switch (1 station) * Double or higher are custom order items. (When the input shaft is rotated in both directions, double may be required.) * The proximity switch detects 2 spots for the oscillation setup.			C	With Torque guard (TGX) (Output shaft without keyway)
				S	Torque saver (TSF) + With proximity switch for release detection
				B	Torque saver (TSF) + With proximity switch for release detection (Output shaft without keyway)
				Y	Torque guard (TGX) + With proximity switch for release detection
				D	Torque guard (TGX) + With proximity switch for release detection (Output shaft without keyway) Since the specifications for a torque saver and a torque guard are required when F, A, X, C, S, B, Y, or D is selected, determine "Torque saver/guard installation specification code."

▼ When a worm reducer is installed

Ⓛ Ⓜ Ⓝ Ⓞ Ⓟ Worm reducer installation specification code

Ⓛ Ⓜ Reducer size		Ⓝ Reduction ratio		Ⓞ Clutch/Brake:	
03	HO32, TE35	1	1/10 (TE reducer only)	Y	Clutch/Brake: Yes
04	HO40, TE42	2	1/20		
05	HO50, TE51	3	1/30		
06	HO60, TE63	4	1/40	N	Clutch/Brake: No
08	HO80, TE80	5	1/50		
10	HO100, TE100	6	1/60		
	* Refer to D-551 to 588.		* Those of 1/30 and 1/50 for HO32 and HO40 have special ratio. Verify the delivery schedule.		

Ⓟ Mounting direction

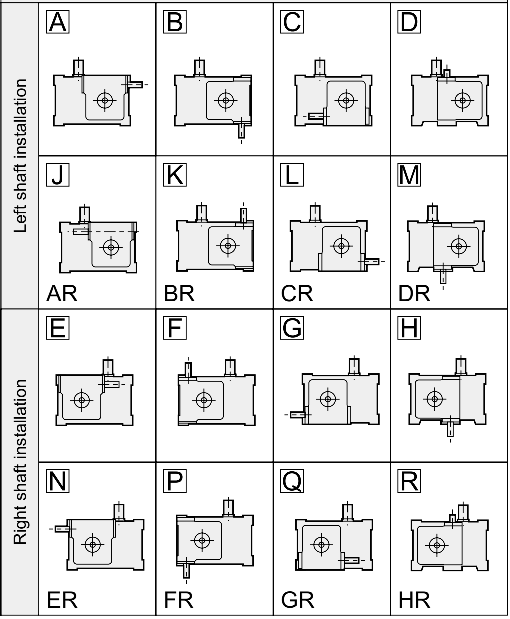

RGIL063-002180S1S1-NWF036YG 04 C

Q R

* While a torque saver/guard is installed onto the output shaft and when none of the worm reducer can be installed onto the input shaft, insert a hyphen "-" at Ⓛ and continue with the torque saver/guard installation specification code.
Example: RGIL063-002180S1S1-NNF-04B

▼ When a torque saver is installed

Ⓠ Ⓡ Torque saver mounting specification code				Application index size
Ⓠ TSF size		Ⓡ Release torque range		
04	TSF4			063
05	TSF5	A	A	063/080
06	TSF6	B	B	110
08	TSF8	C	C	140
11	TSF11	D	D	180
14	TSF14			250

▼ When a torque guard is installed

Ⓠ Ⓡ Torque guard mounting specification code				Application index size
Ⓠ TGX size		Ⓡ Trip torque range		
20	TGX20	L	LC	063/080
35	TGX35	M	MC	110
50	TGX50	H	HC	140
70	TGX70			180

Note 1: When you specify the release (trip) torque of a torque saver/guard, notify CKD of the value. Otherwise, the product will be shipped adjusted at the min. value within the adjusting range.
* Refer to D-589 to 619.

Note 2: The proximity switch for release detection of a torque saver/guard is the NO type. NC type is also available.

Wide angle

2-2. Examples of model numbers with options / 3. Custom specification model No.

When you place an order with a model number, ensure that it exactly matches what you order. Even if 1 letter is incorrectly written, the product will be different with different specifications. In order for us to deliver what you really want, carefully determine the model number referring to the following examples.

Example of model No. (2)

RGIL110-004060S1S5-NJK
Input shaft specification
  Left shaft: Standard
  Right shaft: Input shaft - with rotation detection cam + proximity switch (1 station)
Output shaft specification
  No keyway

Example of model No. (3)

RGIL250-004060S1S1-WNN104YL
Input shaft specification
  Left shaft: Worm reducer installed
  Right shaft: Standard
Output shaft specification: Standard

Worm reducer installation specification
  Reducer size: HO100
  Reduction ratio: 1/40
  Clutch/Brake: Yes
  Mounting direction: L

Example of model No. (4)

RGIL080-003120S1S5-NNF-05B
Input shaft specification
  Left shaft: Standard
  Right shaft: Standard
Output shaft specification: Torque saver installed

TSF installation specifications
  TSF size: TSF5
  Release torque range: B

Example of model No. (5)

RGIL180-003150C1S1-JWF086YG11B
Input shaft specification
  Left shaft: Input shaft - with rotation detection cam + proximity switch (1 station)
  Right shaft: Worm reducer installed
Output shaft specification: Torque saver installed

Worm reducer installation specification
  Reducer size: HO80
  Reduction ratio: 1/60
  Clutch/Brake: Yes
  Mounting direction: G

Torque saver mounting specification
  TSF size: TSF11
  Release torque range: B

● Special specification model number Common for index and oscillating series

RGIL **080** – **006** **045** **S** **1** **S** **1** – **X012345**

Main model No.

Special specification No.

* Add "-X (6 digit number)" after the main model No. as the special specification number.
The special specification model number shall be determined after a consultation with the customer.
Options other than the standard are available upon request. Please provide us with the specifications.
* High speed specifications (input shaft rotational speed of 200 rpm or higher) are deemed to be special specifications.

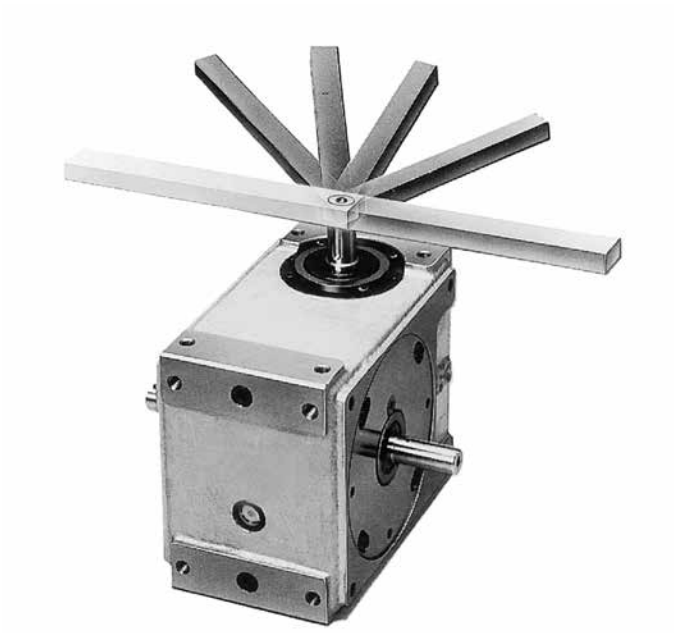

Roller gear cam drive

Wide angle

1. Standard model No.

Oscillating series

RGOL 180 – 180 240 S T S 1

Ⓐ Ⓑ Ⓒ Ⓓ Ⓔ Ⓕ Ⓖ Ⓗ

Ⓐ Model	Ⓑ Distance between shafts		Ⓒ Oscillating angle (ψ)		Ⓓ Total index angle (θt)		Ⓔ Cam curve		Ⓕ Orbit pattern	
RGOL	063	63 mm	180	180°	090	90° (45°×2)	S	MS curve (Standard)	T (Standard)	When the input shaft starts to rotate from the rotation reference point, the output shaft rotates in sequence from 1 and 2 as in the figure. 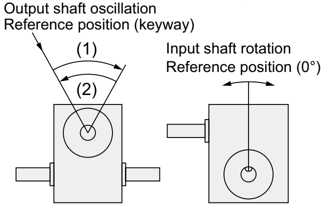
	080	80 mm	120	120°	120	120° (60°×2)				
	110	110 mm	090	90°	180	180° (90°×2)	C	MC curve (MCV50)		
	140	140 mm	060	60°	240	240° (120°×2)				
	180	180 mm	045	45°	300	300° (150°×2)	T	MT curve		
	250	250 mm			360	360° (180°×2)				
									S	When the input shaft starts to rotate from the rotation reference point, the output shaft rotates in sequence from 1 and 2 as in the figure. 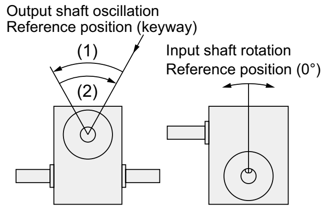 For details of the timing chart, Refer to B-7.

Example of model No. (1)

RGOL080-120180STS1

Shaft interval	80 mm
Oscillating angle	120°
Total index angle	180° (90° × 2)
Cam curve	MS curve
Orbit pattern	T
Shape of the output shaft	Straight
Installation position	Position #1

Ⓖ Shape of the output shaft		Ⓗ Installation position	
S	Straight	1	Position #1
		2	Position #2
		3	Position #3
		4	Position #4
		5	Position #5
		6	Position #6

■Position #1

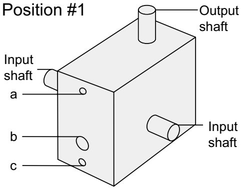

■Position #2

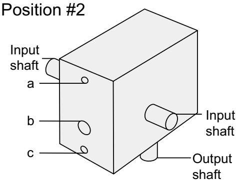

■Position #3

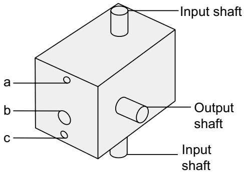

■Position #4

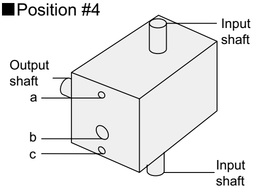

■Position #5

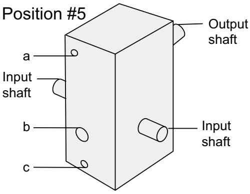

■Position #6

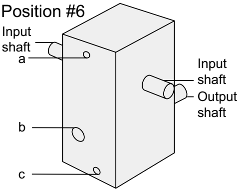

a: Oil supply port b: Oil level gauge c: Drain port

Difference between shafts: **63** mm

Wide angle

● Standard specifications

Index	RG I L 063
Oscillator	RGOL 063

Dimensions

CAD

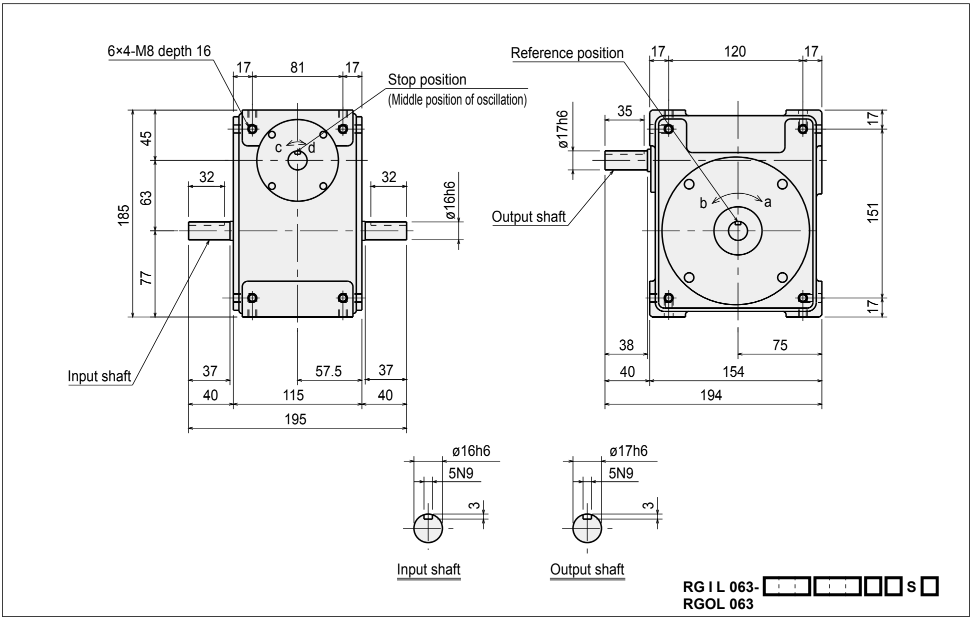

Installation position and oil supply/drain port and oil level gauge positions

Installation position	1	2	3
Series	**RGIL/RGOL**	**RGIL/RGOL**	**RGIL/RGOL**
Dimensions	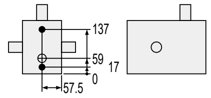	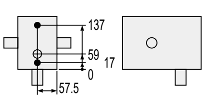	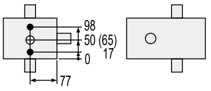 The dimensions in ( ) are for RGOL.

- ● Oil fill/drain port (Rc^1/$_4$)
- ○ Oil level gauge (ø 20)

Installation position	4	5	6	
Series	**RGIL/RGOL**	**RGIL/RGOL**	**RGIL**	**RGOL**
Dimensions	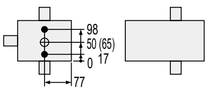 The dimensions in ( ) are for RGOL.	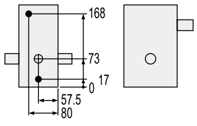	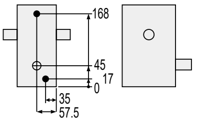	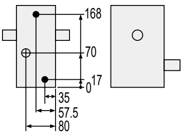

Characteristics

Descriptions	Unit	Characteristics	
		Output shaft	Input shaft
Allowable thrust force	N	1000	1300
Allowable radial force	N	1300	900
Allowable bending moment	N·m	38	-
Moment of inertia	$kg{\cdot}m^2$	7.20×10^{-5}	1.57×10^{-3}

Descriptions	Unit	Characteristics
Internal frictional torque (Tin)	N·m	5.8
Product weight	kg	17
Oil level	ℓ	0.3
Paint color		Silver

Accuracy

	Index accuracy (sec.)	
Indexing accuracy	1 dwell	±60
	2 dwell	-
	3 dwell	-
	4 dwell	-
Repeatability		30

Oscillating accuracy (sec.)	
Indexing accuracy	±120
Repeatability	30

* For the dwell accuracy, please contact CKD.

List of index angles

Index series **RGIL 063** Cam curve/MS

	Total index angle (θt) / Index number (n)	45	60	90	120	150	180	210	240
1 dwell	2				○	○	○	○	○
	3			○	○	○	○		
	4		○	○	○				
	6	○	○	○					
	8	○	○						

Oscillating series **RGOL 063** Cam curve/MS

Total index angle (θt) / Oscillating angle (ψ)	90	120	180	240	300	360
180				○	○	○
120			○	○	○	
90		○	○	○		
60	○	○	○			
45	○	○				

Dimensions with options

With worm reducer (with HO32-C/B)

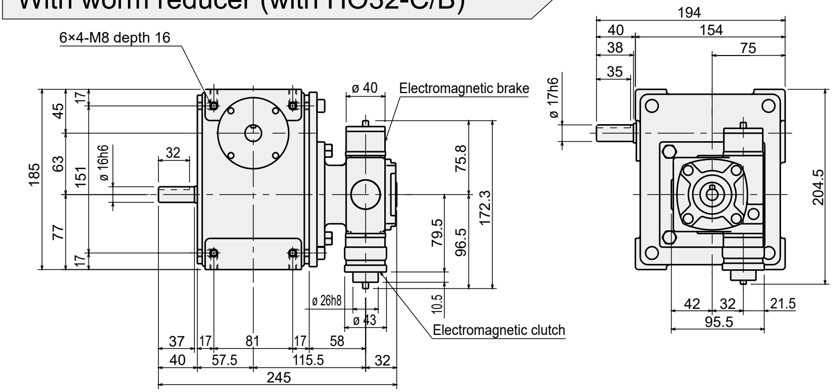

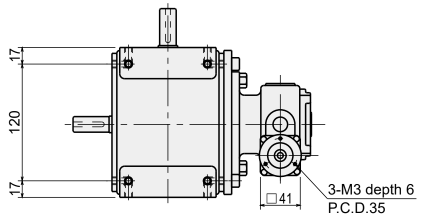

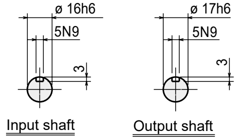

RG I L 063-☐☐☐☐S☐-NWN03☐YG
RGOL 063

With worm reducer (without HO32-C/B)

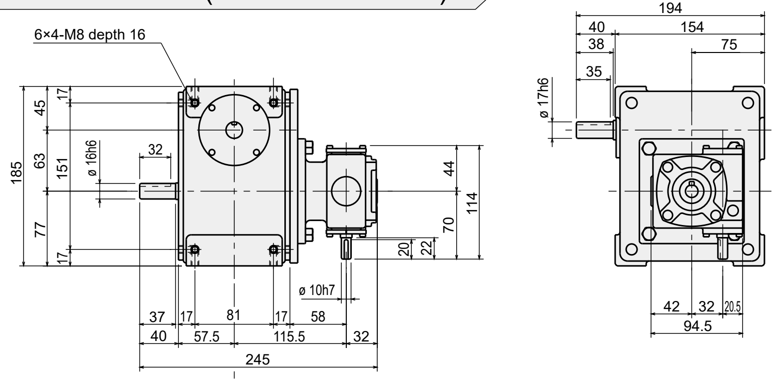

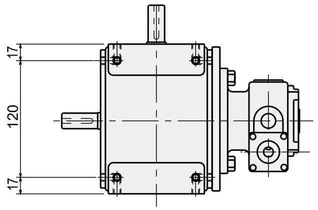

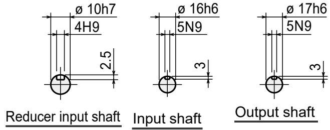

RG I L 063-☐☐☐☐S☐-NWN03☐NG
RGOL 063

Torque saver (TSF4)

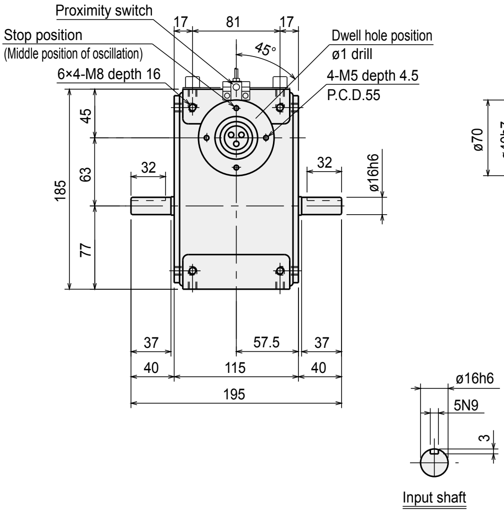

RG I L 063-☐☐☐☐☐☐☐☐ S ☐ -NNF-04 ☐
RGOL 063

Torque saver (TSF5)

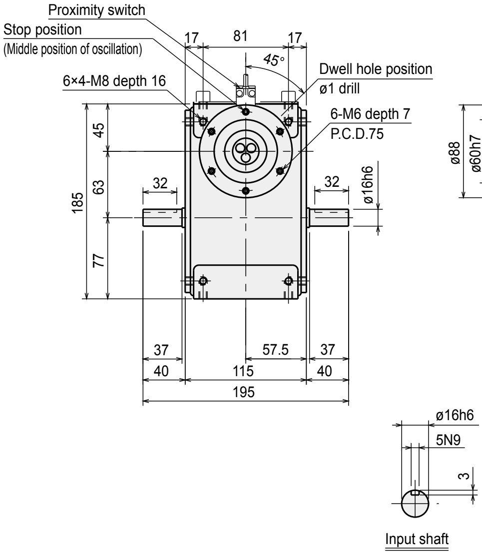

RG I L 063-☐☐☐☐☐☐☐☐ S ☐ -NNF-05 ☐
RGOL 063

Wide angle

Index	RG I L 080
Oscillator	RGOL 080

● Standard specifications

Dimensions

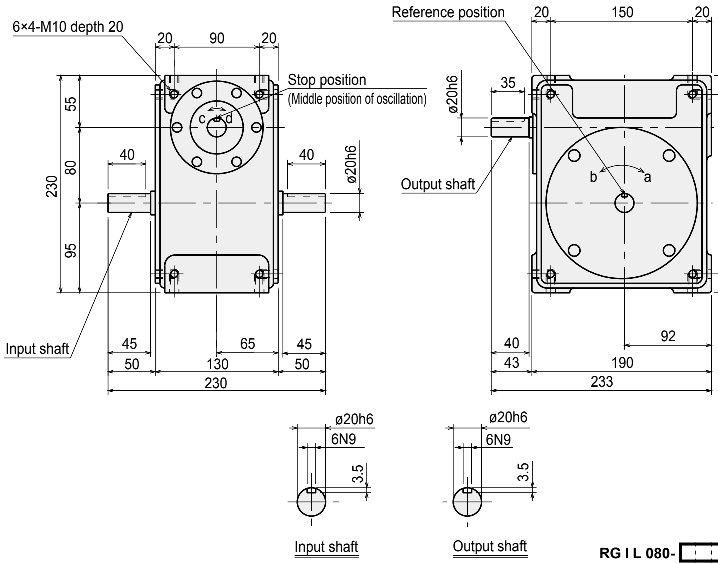

RG I L 080-☐☐☐☐**s**☐
RGOL 080

Installation position and oil supply/drain port and oil level gauge positions

Installation position	1	2	3
Series	**RGIL/RGOL**	**RGIL/RGOL**	**RGIL/RGOL**
Dimensions	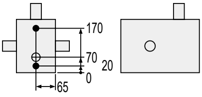 	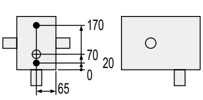 	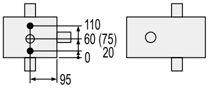 The dimensions in ( ) are for RGOL.

- ● Oil fill/drain port (Rc$^3/_8$)
- ○ Oil level gauge (ø 30)

Installation position	4	5	6	
Series	**RGIL/RGOL**	**RGIL/RGOL**	**RGIL**	**RGOL**
Dimensions	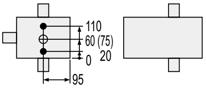 The dimensions in ( ) are for RGOL.	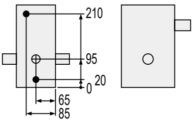 	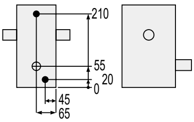 	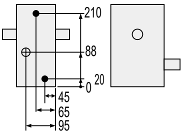

Characteristics

Descriptions	Unit	Characteristics	
		Output shaft	Input shaft
Allowable thrust force	N	1500	2200
Allowable radial force	N	1900	1900
Allowable bending moment	N·m	60	-
Moment of inertia	kg·m^2	2.70 × 10^{-4}	4.72 × 10^{-3}

Descriptions	Unit	Characteristics
Internal frictional torque (Tin)	N·m	9.3
Product weight	kg	27
Oil level	ℓ	0.8
Paint color		Silver

Accuracy

Index accuracy (sec.)		
Indexing accuracy	1 dwell	±30
	2 dwell	-
	3 dwell	-
	4 dwell	-
Repeatability		15

Oscillating accuracy (sec.)	
Indexing accuracy	±90
Repeatability	15

* For the dwell accuracy, please contact CKD.

List of index angles

Index series **RGIL 080** Cam curve/MS

	Total index angle (θt) Index number (n)	45	60	90	120	150	180	210	240
1 dwell	2				○	○	○	○	○
	3			○	○	○	○		
	4		○	○	○				
	6	○	○	○					
	8	○	○						

Oscillating series **RGOL 080** Cam curve/MS

Total index angle (θt) Oscillating angle (ψ)	90	120	180	240	300	360
180				○	○	○
120			○	○	○	
90		○	○	○		
60	○	○	○			
45	○	○				

Product specifications
Compact
Standard
Table
Wide angle
Basic
Roller gear cam drive
Parallel cam drive
Circular
Linear
Pick and Place drive
Option

Dimensions with options

With worm reducer (with HO40-C/B)

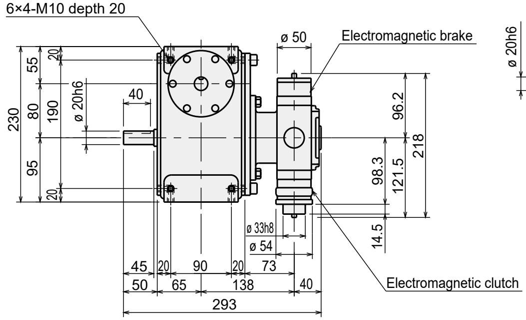

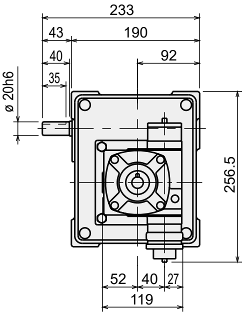

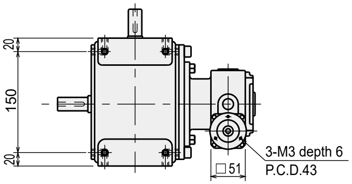

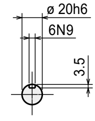

Input shaft

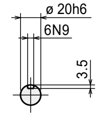

Output shaft

RG I L 080-☐☐☐☐S☐-NWN04☐YG
RGOL 080

With worm reducer (without HO40-C/B)

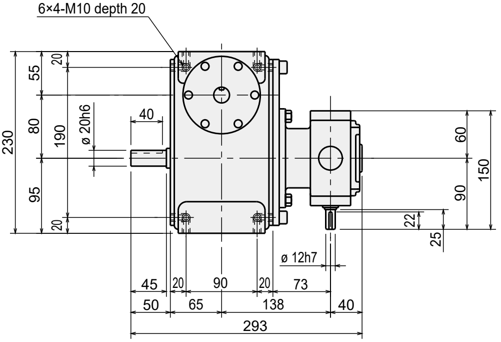

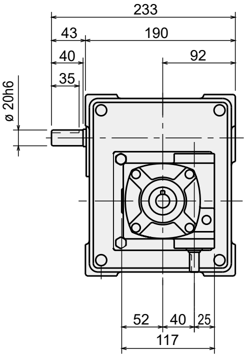

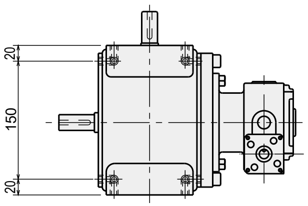

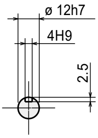

Reducer input shaft

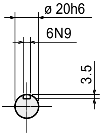

Input shaft

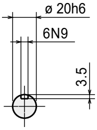

Output shaft

RG I L 080-☐☐☐☐S☐-NWN04☐NG
RGOL 080

With Torque saver (TSF5)

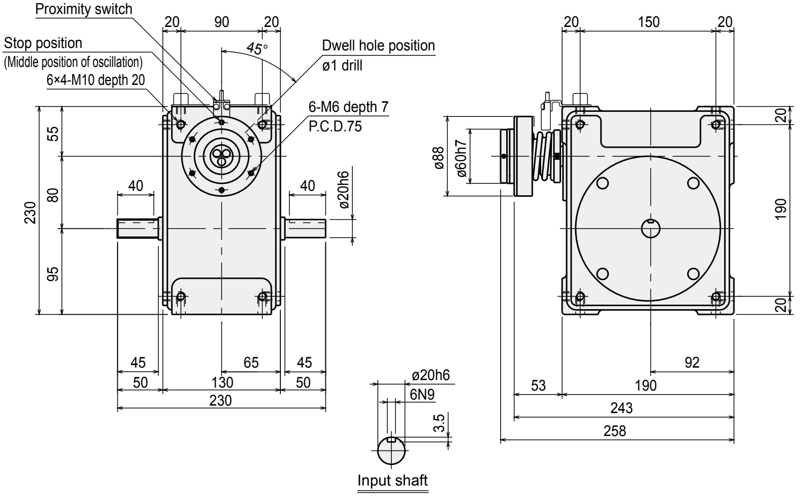

RG I L 080-☐☐☐☐☐☐☐☐S☐-NNF-05☐
RGOL 080

Wide angle

Index	RG I L 110
Oscillator	RGOL 110

● Standard specifications

Dimensions

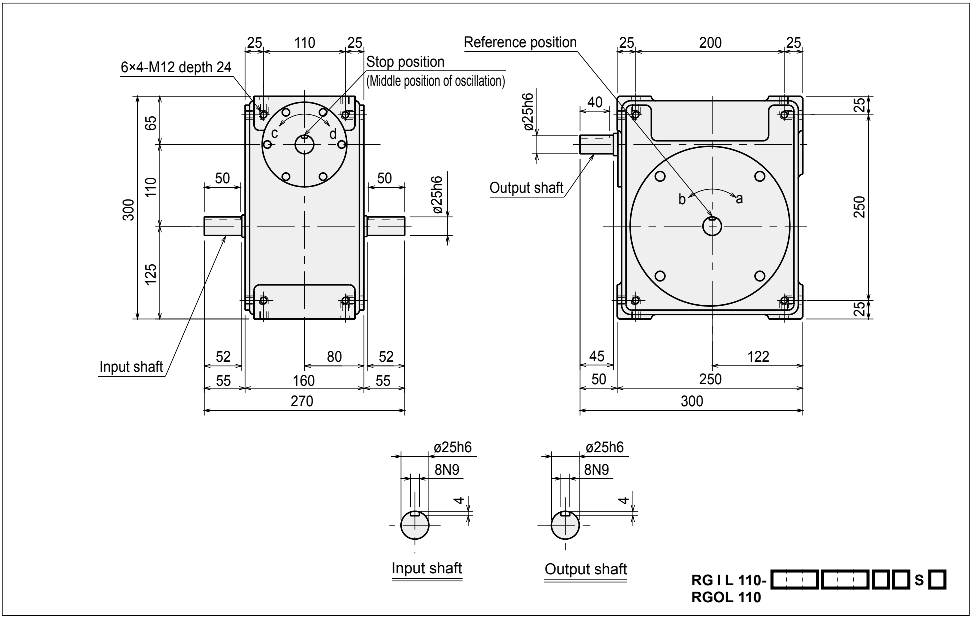

Installation position and oil supply/drain port and oil level gauge positions

Installation position	1	2	3
Series	**RGIL/RGOL**	**RGIL/RGOL**	**RGIL/RGOL**
Dimensions	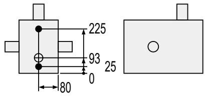	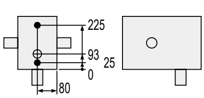	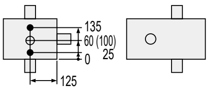 The dimensions in ( ) are for RGOL.

- ● Oil fill/drain port (Rc$^{3}/_{8}$)
- ○ Oil level gauge (ø 30)

Installation position	4	5	6	
Series	**RGIL/RGOL**	**RGIL/RGOL**	**RGIL**	**RGOL**
Dimensions	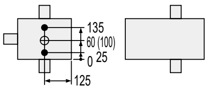 The dimensions in ( ) are for RGOL.	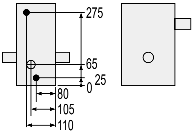	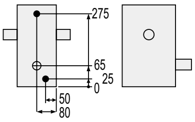	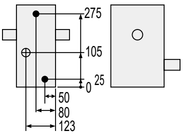

Characteristics

Descriptions	Unit	Characteristics	
		Output shaft	Input shaft
Allowable thrust force	N	2700	3000
Allowable radial force	N	4000	3000
Allowable bending moment	N·m	110	-
Moment of inertia	$kg{\cdot}m^2$	1.12×10^{-3}	2.37×10^{-2}

Descriptions	Unit	Characteristics
Internal frictional torque (Tin)	N·m	18
Product weight	kg	60
Oil level	ℓ	2
Paint color		Silver

Accuracy

Index accuracy (sec.)		
Indexing accuracy	1 dwell	±30
	2 dwell	-
	3 dwell	-
	4 dwell	-
Repeatability		15

Oscillating accuracy (sec.)	
Indexing accuracy	±90
Repeatability	15

* For the dwell accuracy, please contact CKD.

List of index angles

Index series **RGIL 110** Cam curve/MS

	Total index angle (θt) / Index number (n)	45	60	90	120	150	180	210	240
1 dwell	2				○	○	○	○	○
	3			○	○	○	○		
	4		○	○	○				
	6	○	○	○					
	8	○	○						

Oscillating series **RGOL 110** Cam curve/MS

Total index angle (θt) / Oscillating angle (ψ)	90	120	180	240	300	360
180				○	○	○
120			○	○	○	
90		○	○	○		
60	○	○	○			
45	○	○				

Index	RG I L 110
Oscillator	RGOL 110

Dimensions with options

With worm reducer (with HO50-C/B)

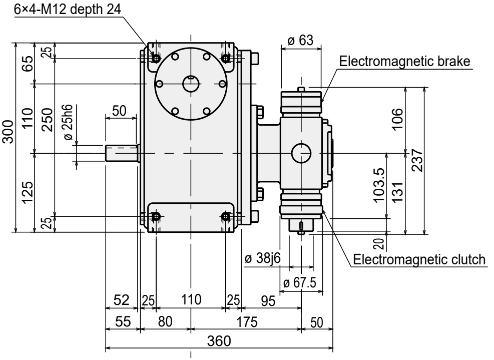

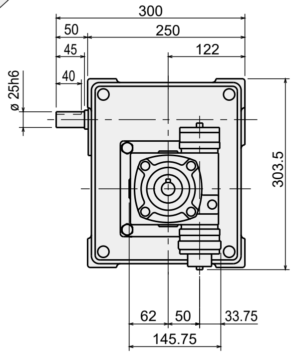

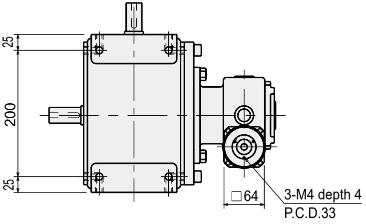

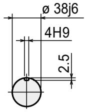

Reducer input shaft

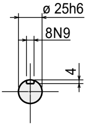

Input shaft

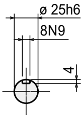

Output shaft

RG I L 110-☐☐☐☐☐☐☐☐ S ☐ -NWN05 ☐ YG
RGOL 110

With worm reducer (without HO50-C/B)

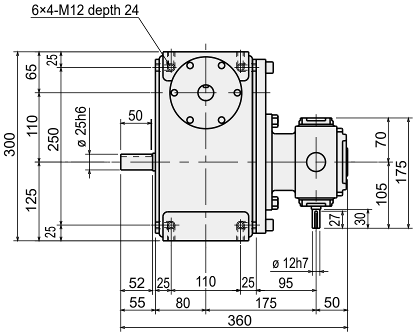

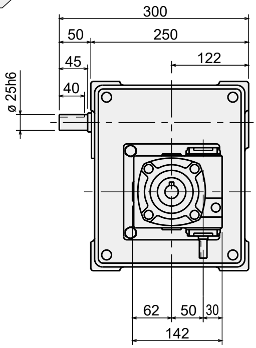

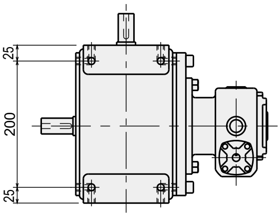

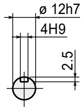

Reducer input shaft

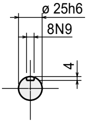

Input shaft

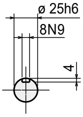

Output shaft

RG I L 110-☐☐☐☐☐☐☐☐ S ☐ -NWN05 ☐ NG
RGOL 110

With Torque saver (TSF6)

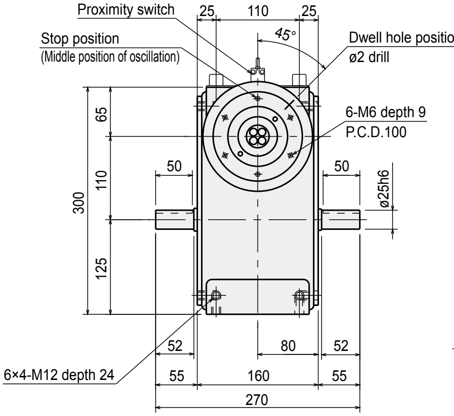

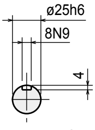

Input shaft

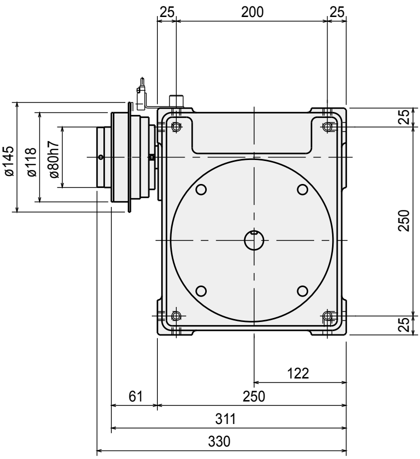

RG I L 110-☐☐☐☐ S ☐ -NNF-06 ☐
RGOL 110

Difference between shafts: **140** mm

Wide angle

Index	**RG I L 140**
Oscillator	**RGOL 140**

● Standard specifications

Dimensions

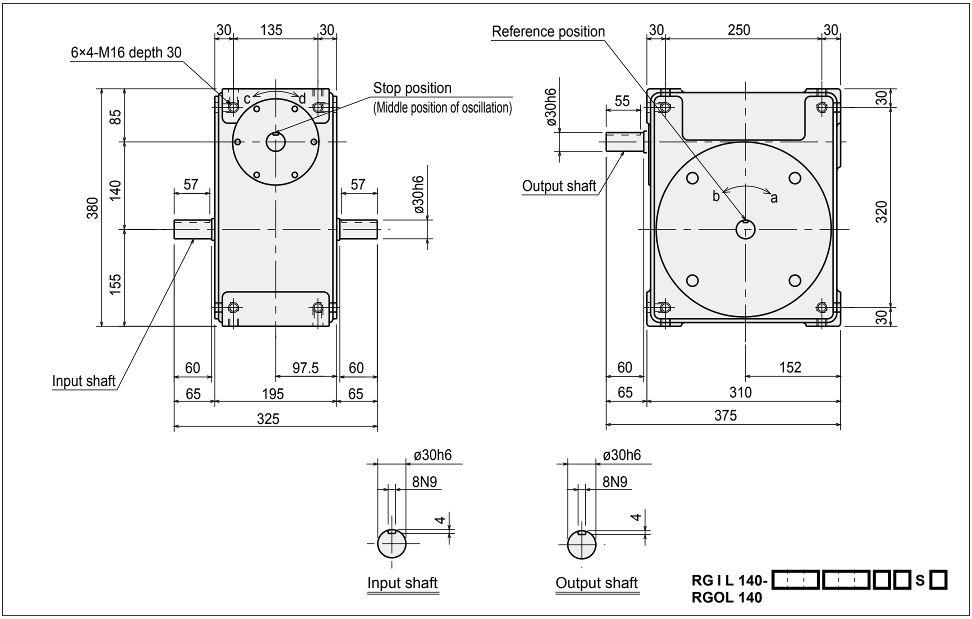

Installation position and oil supply/drain port and oil level gauge positions

Installation position	1	2	3
Series	**RGIL/RGOL**	**RGIL/RGOL**	**RGIL/RGOL**
Dimensions	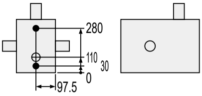	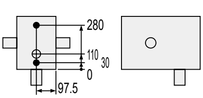	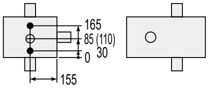 The dimensions in ( ) are for RGOL.

- ● Oil fill/drain port (Rc$^{3}/_{8}$)
- ○ Oil level gauge (ø 30)

Installation position	4	5	6	
Series	**RGIL/RGOL**	**RGIL/RGOL**	**RGIL**	**RGOL**
Dimensions	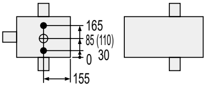 The dimensions in ( ) are for RGOL.	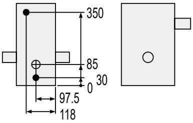	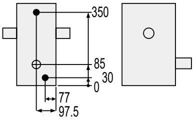	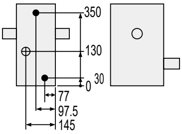

Characteristics

Descriptions	Unit	Characteristics	
		Output shaft	Input shaft
Allowable thrust force	N	3600	3800
Allowable radial force	N	5000	3800
Allowable bending moment	N·m	190	-
Moment of inertia	$kg·m^2$	2.16×10^{-3}	8.86×10^{-2}

Descriptions	Unit	Characteristics
Internal frictional torque (Tin)	N·m	29
Product weight	kg	100
Oil level	ℓ	3.5
Paint color		Silver

Accuracy

Index accuracy (sec.)		
Indexing accuracy	1 dwell	±30
	2 dwell	-
	3 dwell	-
	4 dwell	-
Repeatability		15

Oscillating accuracy (sec.)	
Indexing accuracy	±60
Repeatability	15

* For the dwell accuracy, please contact CKD.

List of index angles

Index series **RGIL 140** Cam curve/MS

	Total index angle (θt) / Index number (n)	45	60	90	120	150	180	210	240
1 dwell	2				○	○	○	○	○
	3			○	○	○	○		
	4		○	○	○				
	6	○	○	○					
	8	○	○						

Oscillating series **RGOL 140** Cam curve/MS

Total index angle (θt) / Oscillating angle (ψ)	90	120	180	240	300	360
180				○	○	○
120			○	○	○	
90		○	○	○		
60	○	○	○			
45	○	○				

Dimensions with options

With worm reducer (with HO60-C/B)

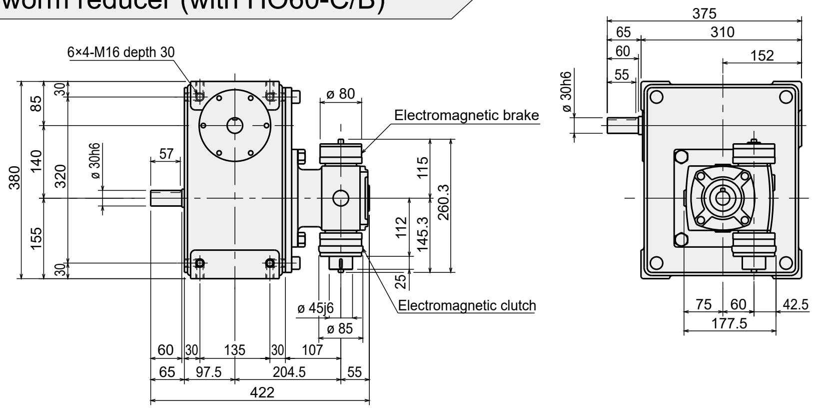

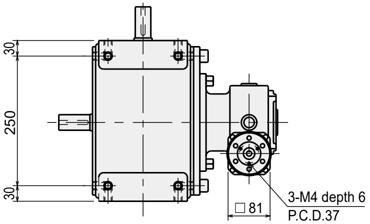

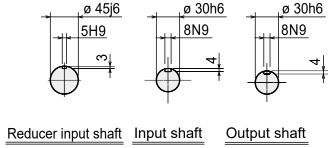

RG I L 140-☐☐☐☐☐☐☐☐ S ☐ -NWN06 ☐ YG
RGOL 140

With worm reducer (without HO60-C/B)

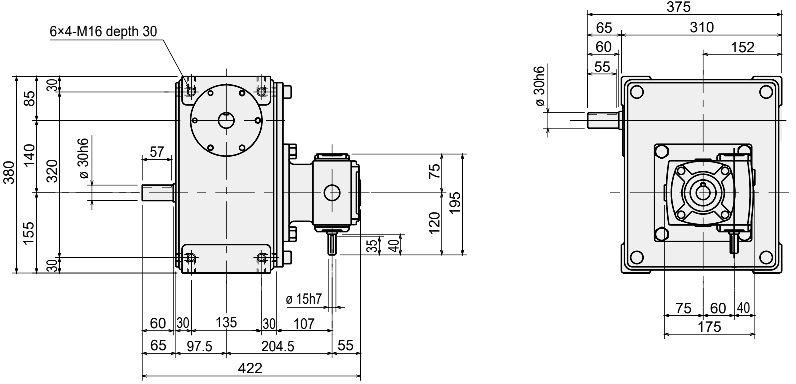

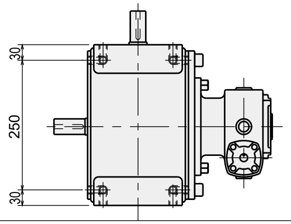

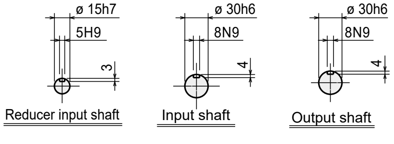

RG I L 140-☐☐☐☐☐☐☐☐ S ☐ -NWN06 ☐ NG
RGOL 140

With Torque saver (TSF8)

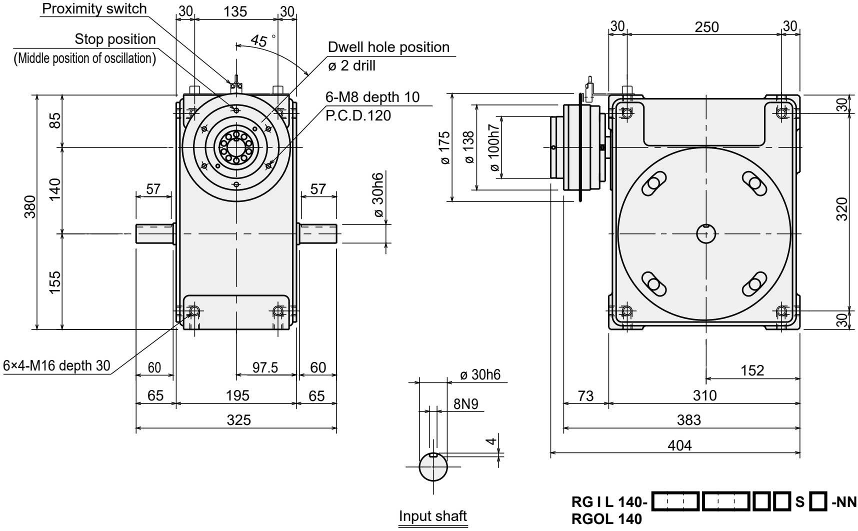

RG I L 140-☐☐☐☐S☐-NNF-08☐
RGOL 140

Difference between shafts: **180** mm

Wide angle

Index	**RG I L 180**
Oscillator	**RGOL 180**

● Standard specifications

Dimensions

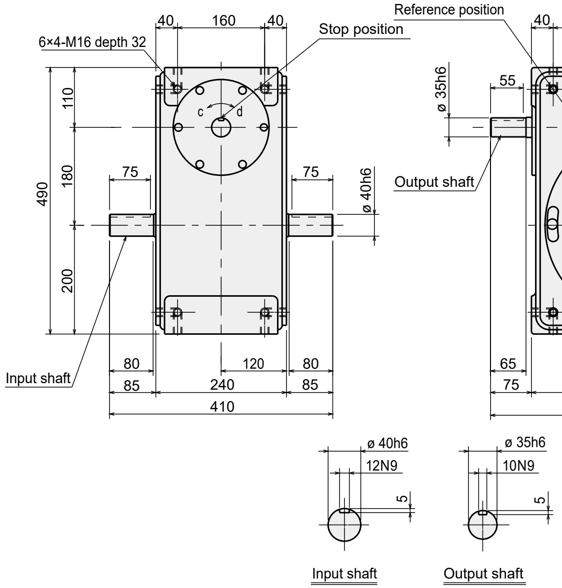

RG I L 180-□□□□ **S** □
RGOL 180

Installation position and oil supply/drain port and oil level gauge positions

● Oil fill/drain port ($Rc^3/_4$)
○ Oil level gauge (ø 30)

Installation position	1	2	3
Series	**RGIL/RGOL**	**RGIL/RGOL**	**RGIL/RGOL**
Dimensions	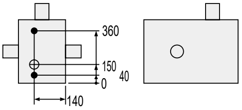	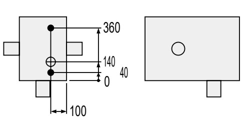	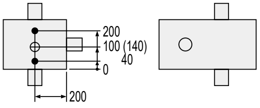 The dimensions in ( ) are for RGOL.

Installation position	4	5	6
Series	**RGIL/RGOL**	**RGIL/RGOL**	**RGIL/RGOL**
Dimensions	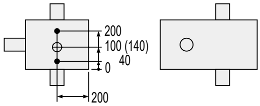 The dimensions in ( ) are for RGOL.	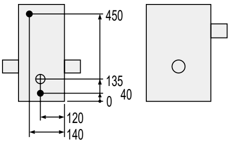	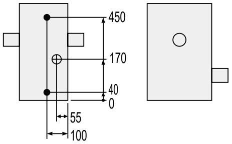

Characteristics

Descriptions	Unit	Characteristics	
		Output shaft	Input shaft
Allowable thrust force	N	5800	5000
Allowable radial force	N	7500	4900
Allowable bending moment	N·m	270	-
Moment of inertia	$kg{\cdot}m^2$	0.0088	0.26

Descriptions	Unit	Characteristics
Internal frictional torque (Tin)	N·m	47
Product weight	kg	300
Oil level	ℓ	8
Paint color		Silver

Accuracy

Index accuracy (sec.)		
Indexing accuracy	1 dwell	±30
	2 dwell	-
	3 dwell	-
	4 dwell	-
Repeatability		15

Oscillating accuracy (sec.)	
Indexing accuracy	±60
Repeatability	15

* For the dwell accuracy, please contact CKD.

List of index angles

Index series **RGIL 180** Cam curve/MS

	Total index angle (θt) / Index number (n)	45	60	90	120	150	180	210	240
1 dwell	2				○	○	○	○	○
	3			○	○	○	○		
	4		○	○	○				
	6	○	○	○					
	8	○	○						

Oscillating series **RGOL 180** Cam curve/MS

Total index angle (θt) / Oscillating angle (ψ)	90	120	180	240	300	360
180				○	○	○
120			○	○	○	
90		○	○	○		
60	○	○	○			
45	○	○				

Index	RG I L 180
Oscillator	RGOL 180

Dimensions with options

With worm reducer (with HO80-C/B)

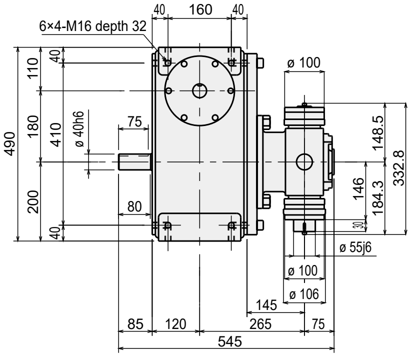

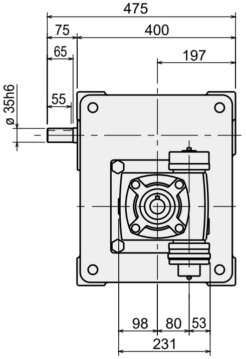

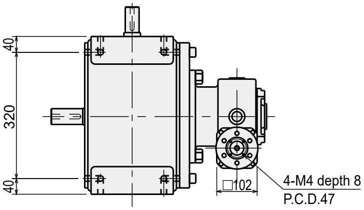

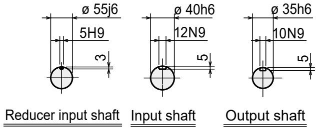

RG I L 180-☐☐☐☐S☐-NWN08☐YG
RGOL 180

With worm reducer (without HO80-C/B)

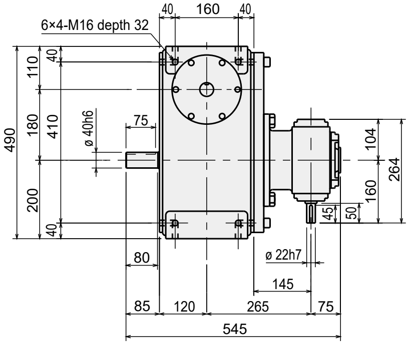

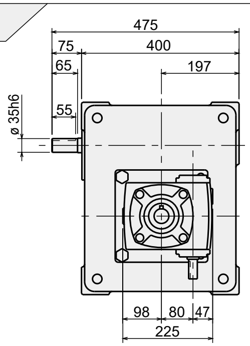

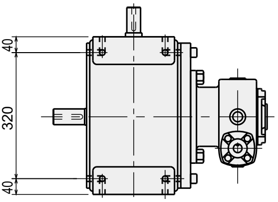

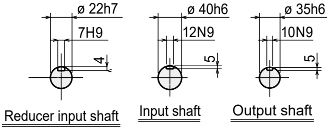

RG I L 180-☐☐☐☐S☐-NWN08☐NG
RGOL 180

With Torque saver (TSF11)

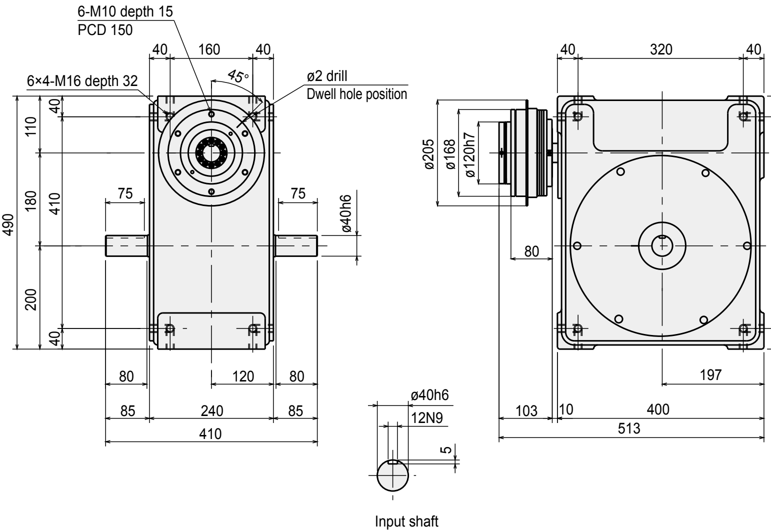

RG I L 180- ☐☐☐☐☐☐☐☐ **S** ☐ **-NNF-11** ☐
RGOL 180

Wide angle

Index	**RG I L 250**
Oscillator	**RGOL 250**

● Standard specifications

Dimensions

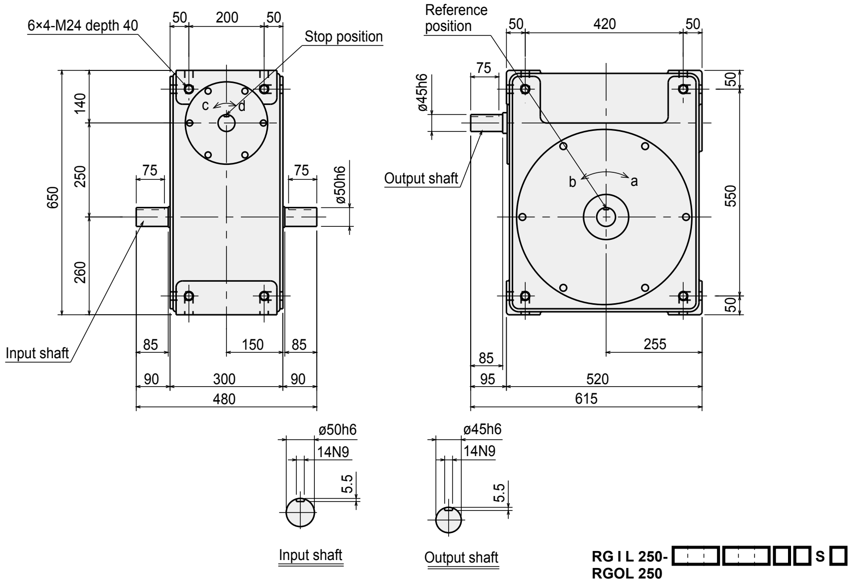

Installation position and oil supply/drain port and oil level gauge positions

● Oil fill/drain port (Rc$^3/_4$)
○ Oil level gauge (ø 30)

Installation position	1	2	3
Series	**RGIL/RGOL**	**RGIL/RGOL**	**RGIL/RGOL**
Dimensions	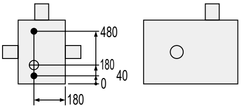	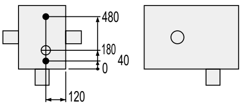	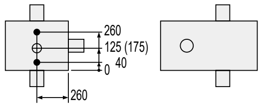 The dimensions in ( ) are for RGOL.

Installation position	4	5	6
Series	**RGIL/RGOL**	**RGIL/RGOL**	**RGIL/RGOL**
Dimensions	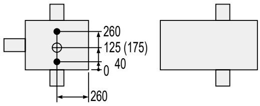 The dimensions in ( ) are for RGOL.	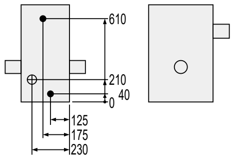	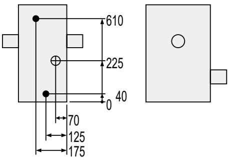

Characteristics

Descriptions	Unit	Characteristics	
		Output shaft	Input shaft
Allowable thrust force	N	9000	7000
Allowable radial force	N	12000	7800
Allowable bending moment	N·m	550	-
Moment of inertia	$kg·m^2$	0.032	1.36

Descriptions	Unit	Characteristics
Internal frictional torque (Tin)	N·m	91
Product weight	kg	520
Oil level	ℓ	16
Paint color		Silver

Accuracy

Index accuracy (sec.)		
Indexing accuracy	1 dwell	±30
	2 dwell	-
	3 dwell	-
	4 dwell	-
Repeatability		15

Oscillating accuracy (sec.)	
Indexing accuracy	±60
Repeatability	15

* For the dwell accuracy, please contact CKD.

List of index angles

Index series **RGIL 250** Cam curve/MS

Total index angle (θt) / Index number (n)		45	60	90	120	150	180	210	240
1 dwell	2				○	○	○	○	○
	3			○	○	○	○		
	4		○	○	○				
	6	○	○	○					
	8	○	○						

Oscillating series **RGOL 250** Cam curve/MS

Total index angle (θt) / Oscillating angle (ψ)	90	120	180	240	300	360
180				○	○	○
120			○	○	○	
90		○	○	○		
60	○	○	○			
45	○	○				

Dimensions with options

With worm reducer (with HO100-C/B)

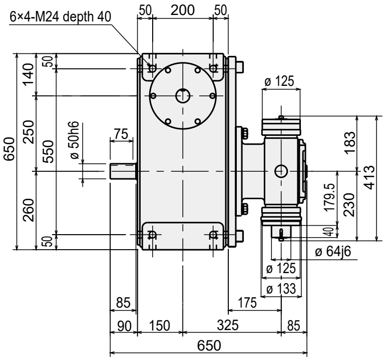

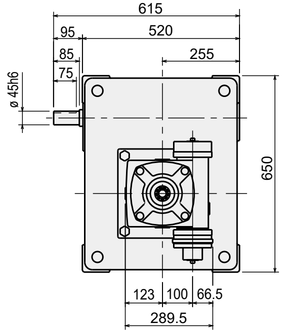

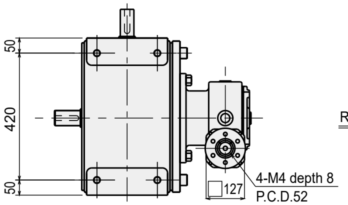

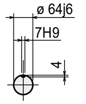

Reducer input shaft

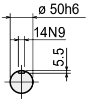

Input shaft

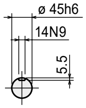

Output shaft

RG I L 250-☐☐☐ ☐☐☐ ☐ ☐ S ☐ -NWN10 ☐ YG
RGOL 250

With worm reducer (without HO100-C/B)

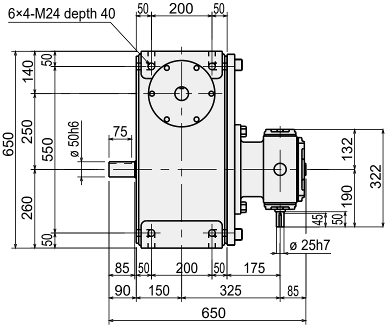

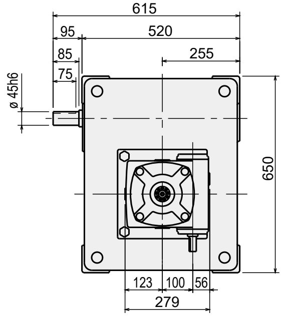

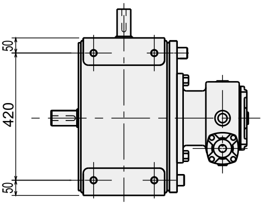

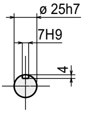

Reducer input shaft

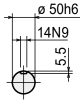

Input shaft

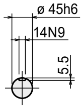

Output shaft

RG I L 250-☐☐☐ ☐☐☐ ☐ ☐ S ☐ -NWN10 ☐ NG
RGOL 250

With Torque saver (TSF14)

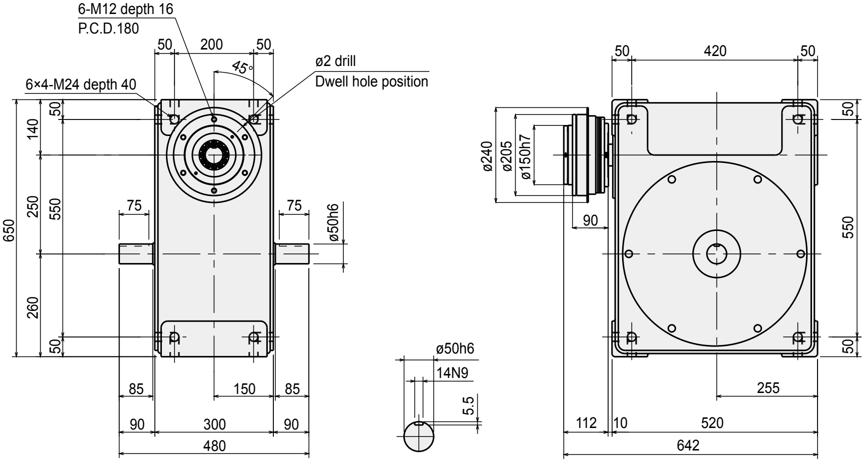

Input shaft

RG I L 250-☐☐☐☐**S**☐**-NNF-14**☐
RGOL 250

Output torque table

● RGIL (1 dwell)

Cam curve/MS

Index number	Total index angle (deg)	Size	Static rated output torque (N·m)	Rated dynamic output torque (N·m)								
				Input shaft rotational speed (rpm)								
				30	60	90	120	150	200	300	400	600
2	120	063	18.7	7.66	6.81	5.80	5.16	4.71	4.15	3.39	2.82	
		080	50.1	25.4	22.5	19.2	17.1	15.5	13.6	11.0	8.9	
		110	129	52.9	46.9	39.8	35.3	32.0	27.7	21.3	15.6	
		140	169	105	98	90	80	72	63	49		
		180	568	262	232	196	173	155	132			
		250	1160	595	526	442	386	342				
	150	063	30.9	16.7	14.8	12.7	11.3	10.3	9.2	7.7	6.8	
		080	50.1	29.3	26.1	22.2	19.8	18.1	16.0	13.3	11.3	
		110	140	96.1	90.2	82.4	73.4	67.0	59.3	48.9	41.2	
		140	272	193	179	152	136	124	110	90	76	
		180	568	300	266	226	201	182	158	123		
		250	1630	846	750	636	562	507	436			
	180	063	30.9	18.6	16.5	14.1	12.6	11.5	10.3	8.7	7.7	
		080	50.1	32.5	28.9	24.6	22.0	20.1	17.8	14.9	12.9	
		110	140	106	100	91	81	74	66	55	48	
		140	272	212	197	168	150	137	122	101	87	
		180	710	430	382	325	290	264	233	189		
		250	1630	924	821	697	619	562	490			
	210	063	30.9	19.8	17.8	15.2	13.6	12.4	11.1	9.4	8.3	
		080	50.1	34.5	31.0	26.5	23.6	21.6	19.3	16.2	14.2	
		110	140	113	107	98	88	80	71	60	52	
		140	272	225	211	180	160	147	131	110	96	
		180	710	455	409	348	311	283	251	207	175	
		250	1630	975	875	744	662	603	530	427		
	240	063	30.9	20.7	18.9	16.1	14.4	13.2	11.8	10.0	8.9	
		080	50.1	36.0	32.8	28.0	25.0	22.9	20.4	17.2	15.2	
		110	140	118	113	104	93	85	75	64	56	
		140	272	234	222	189	169	155	138	116	102	
		180	710	473	430	366	327	299	265	221	190	
		250	1630	1010	920	780	700	630	560	460		
3	90	063	30.9	15.3	13.6	11.6	10.3	9.4	8.4	6.9	5.9	
		080	50.1	27.0	24.0	20.4	18.1	16.5	14.5	11.6	9.2	
		110	129	56.2	49.9	42.3	37.5	33.9	29.3	22.1	15.7	
		140	248	146	129	110	97	88	77	60		
		180	568	277	245	207	182	163	138			
		250	1630	782	691	582	509	451	371			
	120	063	30.9	18.2	16.2	13.8	12.3	11.3	10.0	8.5	7.4	
		080	50.1	31.9	28.3	24.1	21.5	19.7	17.4	14.4	12.3	
		110	140	104	98	89	80	73	64	53	45	
		140	272	208	193	165	147	134	118	98	82	
		180	710	422	375	319	283	257	225	178		
		250	1630	907	805	682	603	544	468			
	150	063	30.9	20.3	18.0	15.4	13.7	12.6	11.2	9.5	8.4	
		080	50.1	35.3	31.4	26.8	23.9	21.8	19.4	16.3	14.2	
		110	140	115	108	99	88	81	72	60	52	
		140	272	229	213	181	162	148	131	110	95	
		180	710	464	412	351	313	285	252	206	171	
		250	1630	991	880	748	665	604	528	418		
	180	063	30.9	21.5	19.4	16.5	14.8	13.5	12.1	10.3	9.1	
		080	50.1	37.2	33.5	28.6	25.6	23.4	20.8	17.6	15.5	
		110	140	122	116	106	95	87	77	65	57	
		140	272	240	226	193	172	158	141	118	104	
		180	710	486	438	374	333	304	270	224	191	
		250	1630	1040	930	790	710	640	570	460	380	

● RGIL (1 dwell)

Cam curve/MS

Index number	Total index angle (deg)	Size	Static rated output torque (N·m)	Rated dynamic output torque (N·m) Input shaft rotational speed (rpm) 30	60	90	120	150	200	300	400	600
4	60	063	14.6	5.69	5.04	4.28	3.79	3.42	2.95	2.22	1.56	
		080	23.3	9.40	8.30	6.98	6.10	5.40	4.42	2.64		
		110	67.4	33.7	29.7	24.9	21.7	19.1	15.4	8.5		
		140	148	64.1	56.6	47.6	41.5	36.7	30.0	17.5		
		180	216	130	121	108	92	78	58			
		250	742	346	301	245	203	164	100			
	90	063	18.7	9.48	8.42	7.18	6.40	5.84	5.17	4.27	3.62	
		080	19.9	14.7	13.8	13.2	12.8	12.5	12.0	11.0	9.5	
		110	91.5	57.4	50.9	43.3	38.4	34.9	30.4	23.8	18.3	
		140	169	128	120	110	98	89	78	62	50	
		180	345	262	243	206	182	164	140	103		
		250	943	566	500	421	369	328	271			
	120	063	18.7	10.7	9.5	8.1	7.3	6.7	5.9	5.0	4.3	
		080	19.9	16.7	15.6	15.1	14.6	14.3	13.8	13.0	11.8	
		110	129	74.3	66.1	56.3	50.1	45.8	40.5	33.3	28.0	
		140	169	144	135	124	110	101	89	74	63	
		180	345	295	274	233	207	188	165	131	104	
		250	1160	802	712	604	535	484	419	320		
6	45	063	30.9	14.8	13.2	11.2	10.0	9.1	8.0	6.4	5.1	
		080	50.1	26.1	23.2	19.6	17.4	15.6	13.4	9.9	6.7	
		110	140	85.6	80.1	72.7	64.2	57.7	49.3	35.6	22.6	
		140	272	172	159	135	119	107	91	65		
		180	568	268	236	198	171	149	117			
		250	1630	757	664	551	469	399	292			
	60	063	30.9	17.7	15.7	13.4	11.9	10.9	9.7	8.0	6.8	
		080	50.1	30.9	27.4	23.3	20.7	18.9	16.6	13.3	10.6	
		110	140	101	95	86	77	70	61	49	38	
		140	272	202	187	159	141	128	112	89	69	
		180	710	409	363	307	271	243	208	149		
		250	1630	879	776	654	571	506	416			
	90	063	30.9	21.1	18.8	16.0	14.3	13.1	11.7	9.9	8.7	
		080	50.1	36.6	32.5	27.7	24.7	22.6	20.1	16.7	14.4	
		110	140	120	112	103	92	84	74	62	53	
		140	272	236	219	187	167	152	135	112	96	
		180	710	478	424	361	321	292	257	207	167	
		250	1630	1020	900	770	680	620	530	410	300	
8	45	063	18.7	9.18	8.15	6.94	6.16	5.60	4.91	3.91	3.10	
		080	19.9	14.2	13.3	12.7	12.3	11.9	11.2	9.7	7.5	
		110	91.5	55.6	49.2	41.6	36.7	32.9	27.9	19.5	11.4	
		140	169	124	116	106	93	84	72	53	36	
		180	345	254	234	197	172	152	124	72		
		250	943	547	481	399	341	292	216			
	60	063	18.7	10.4	9.3	7.9	7.0	6.4	5.7	4.7	4.0	
		080	19.9	16.1	15.1	14.5	14.1	13.7	13.2	12.1	10.4	
		110	129	72.0	63.9	54.4	48.3	43.8	38.3	30.2	23.4	
		140	169	140	131	119	106	97	85	68	54	
		180	568	348	308	261	231	208	179	132	88	
		250	1160	777	687	580	509	453	378	246		

Roller gear cam drive (standard housing)

Output torque table

Oscillating series

●RGOL

Cam curve/MS

Oscillating angle (deg)	Total index angle (deg)	Size	Static rated output torque (N·m)	Rated dynamic output torque (N·m)								
				Input shaft rotational speed (rpm)								
				15	30	45	60	75	100	150	200	300
180	240	063	19.1	7.99	7.27	6.20	5.54	5.07	4.52	3.82	3.36	2.71
		080	50.1	26.4	24.0	20.5	18.3	16.7	14.9	12.6	11.0	8.7
		110	129	55.1	50.1	42.7	38.1	34.8	30.9	25.8	22.2	16.5
		140	169	109	105	96	86	78	70	58	51	39
		180	568	273	248	211	188	172	152	125	105	
		250	1160	620	563	479	426	388	340	273		
	300	063	30.9	17.0	15.8	13.5	12.1	11.0	9.9	8.4	7.5	6.3
		080	50.1	29.9	27.8	23.7	21.2	19.4	17.3	14.7	13.0	10.6
		110	140	98.1	96.1	87.9	78.5	71.9	64.1	54.3	47.9	39.2
		140	272	197	191	163	145	133	119	100	89	72
		180	568	306	284	242	216	198	176	147	127	96
		250	1630	864	801	682	608	556	492	408	347	
	360	063	30.9	18.6	17.6	15.0	13.4	12.3	11.0	9.3	8.3	7.0
		080	50.1	32.6	30.7	26.2	23.4	21.5	19.2	16.3	14.5	12.1
		110	140	107	106	97	87	80	71	60	54	44
		140	272	213	210	179	160	146	131	111	98	82
		180	710	432	407	348	310	284	253	214	188	151
		250	1630	928	875	746	666	609	541	454	393	
120	180	063	30.9	16.1	14.5	12.4	11.0	10.1	9.0	7.7	6.8	5.6
		080	50.1	28.3	25.5	21.8	19.4	17.8	15.8	13.3	11.6	9.2
		110	129	59.0	53.2	45.4	40.5	37.0	32.8	27.3	23.4	17.1
		140	248	153	138	118	105	96	85	71	62	47
		180	568	291	262	223	199	181	160	131	109	
		250	1630	822	741	630	561	510	448	359	289	
	240	063	30.9	18.6	17.2	14.7	13.2	12.1	10.8	9.2	8.1	6.8
		080	50.1	32.6	30.2	25.7	23.0	21.1	18.8	15.9	14.1	11.6
		110	140	107	104	95	85	78	70	59	52	43
		140	272	213	206	176	157	144	128	108	96	78
		180	710	432	400	341	304	278	248	208	181	140
		250	1630	928	859	732	653	596	528	438	374	
	300	063	30.9	20.3	19.2	16.4	14.6	13.4	12.0	10.2	9.1	7.7
		080	50.1	35.3	33.4	28.5	25.5	23.3	20.8	17.7	15.7	13.2
		110	140	116	115	106	94	86	77	66	58	49
		140	272	229	226	193	173	158	141	120	106	89
		180	710	465	439	375	335	306	273	231	203	164
		250	1630	993	938	800	714	654	581	488	425	330
	360	063	30.9	21.5	20.3	17.6	15.7	14.4	12.9	11.0	9.8	8.3
		080	50.1	37.2	35.2	30.5	27.2	25.0	22.3	19.0	16.9	14.2
		110	140	122	122	113	101	93	83	70	63	53
		140	272	240	238	206	184	168	150	128	114	96
		180	710	486	460	398	356	326	291	247	218	180
		250	1630	1040	980	850	760	690	620	520	460	370
90	120	063	14.6	6.06	5.38	4.59	4.09	3.74	3.32	2.76	2.36	1.71
		080	23.7	10.0	8.9	7.6	6.7	6.1	5.4	4.3	3.4	1.8
		110	67.4	35.9	31.9	27.1	24.1	21.9	19.1	15.2	11.9	5.5
		140	148	68.3	60.7	51.6	45.9	41.7	36.6	29.2	23.3	11.8
		180	216	139	130	119	105	95	82	61	42	
		250	742	370	328	277	243	217	183	123	63	
	180	063	19.1	9.91	9.06	7.73	6.90	6.32	5.64	4.78	4.22	3.46
		080	19.9	15.2	14.7	14.1	13.8	13.5	13.1	12.5	11.5	9.2
		110	91.5	59.4	54.3	46.3	41.3	37.8	33.6	28.1	24.4	18.7
		140	169	133	128	117	105	96	85	72	63	49
		180	345	272	259	221	197	180	159	132	112	79
		250	943	587	536	456	406	369	324	261	211	

●RGOL

Cam curve/MS

Oscillating angle (deg)	Total index angle (deg)	Size	Static rated output torque (N·m)	Rated dynamic output torque (N·m)								
				Input shaft rotational speed (rpm)								
				15	30	45	60	75	100	150	200	300
90	240	063	19.1	11.0	10.3	8.8	7.9	7.2	6.4	5.5	4.9	4.1
		080	19.9	16.8	16.7	16.1	15.6	15.3	14.9	14.3	13.3	11.0
		110	129	75.0	70.4	60.1	53.6	49.1	43.8	37.1	32.7	26.7
		140	169	145	144	132	118	108	96	82	72	59
		180	345	298	292	249	222	203	181	152	132	104
		250	1160	810	760	648	578	528	468	390	335	248
60	90	063	30.9	15.8	14.0	12.0	10.7	9.8	8.7	7.3	6.4	5.1
		080	50.1	27.8	24.7	21.1	18.8	17.2	15.2	12.6	10.7	7.6
		110	140	91.2	85.6	78.2	69.7	63.6	56.3	46.4	39.2	27.0
		140	272	183	170	145	129	118	104	86	72	49
		180	568	286	254	216	191	173	151	117	89	
		250	1630	808	716	608	537	485	417	310	213	
	120	063	30.9	18.6	16.7	14.3	12.7	11.7	10.4	8.8	7.8	6.4
		080	50.1	32.6	29.2	24.9	22.3	20.4	18.1	15.3	13.3	10.5
		110	140	107	101	92	83	75	67	56	49	38
		140	272	213	199	170	152	139	124	104	90	70
		180	710	432	387	330	294	268	237	196	165	112
		250	1630	928	832	708	629	573	503	404	324	
	180	063	30.9	21.5	20.0	17.1	15.2	14.0	12.5	10.6	9.5	8.0
		080	50.1	37.2	34.6	29.5	26.4	24.2	21.6	18.3	16.2	13.5
		110	140	122	120	109	98	90	80	68	60	50
		140	272	240	234	199	178	163	146	123	109	90
		180	710	486	452	386	345	315	281	237	207	164
		250	1630	1040	960	820	730	670	590	500	430	320
45	90	063	19.1	9.87	8.78	7.49	6.68	6.11	5.44	4.57	3.99	3.12
		080	19.9	15.1	14.2	13.7	13.3	13.0	12.6	11.9	10.7	8.0
		110	91.5	59.2	52.6	44.8	39.9	36.4	32.2	26.4	22.1	14.6
		140	169	132	124	113	101	92	82	68	58	41
		180	345	271	251	214	190	173	151	121	96	48
		250	943	584	518	440	389	351	303	227	159	
	120	063	19.1	11.0	10.0	8.5	7.6	7.0	6.2	5.3	4.7	3.8
		080	19.9	16.8	16.1	15.6	15.1	14.8	14.4	13.7	12.6	10.1
		110	129	75.0	68.2	58.2	51.9	47.5	42.2	35.4	30.8	23.7
		140	169	145	140	128	114	104	93	78	68	53
		180	568	362	329	281	250	228	202	168	142	101
		250	1160	810	736	626	557	508	447	363	297	177

● Common specifications

1. Installation specifications

(1) The output shaft is facing upward for the standard version.

Position 1

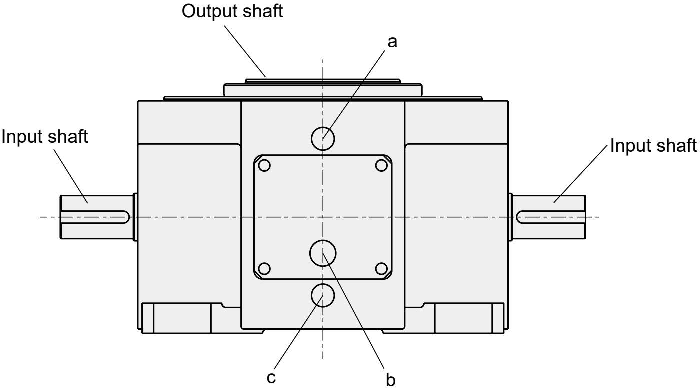

Position 2

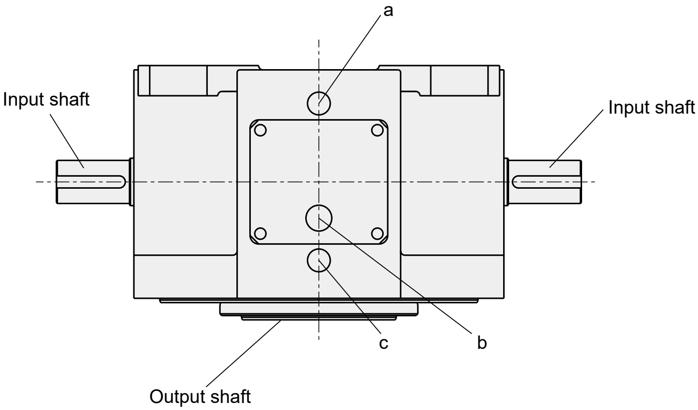

a: Oil supply port b: Oil level gauge c: Drain port

2. Housing material/Fc

3. Diameter of the stepped section of the input shaft

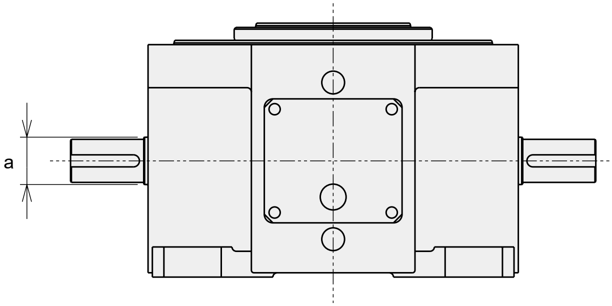

Dimensions / Size	a
250	ø 55

4. Option/Hollow shaft geared motor

List of gear head + motor installation

Main model No.		Motor output kw	Reduction ratio
RGIB	**250**	**2.2**	1/10, 1/15, 1/20, 1/25, 1/30, 1/40, 1/50, 1/60
		3.7	1/10, 1/15, 1/20, 1/25, 1/30, 1/40, 1/50, 1/60

* The above indicates the combinations of standard installations.
Use this after verifying the motor capacity (Pe), the allowable output shaft torque (Trr) and the load torque of the geared motor (Ter).

Roller gear cam drive

Basic

Index	RGIB	250

1. Index drives/Model No. table Index series

RGIB 250 – 004 270 S 1 F 1
Ⓐ Ⓑ Ⓒ Ⓓ Ⓔ Ⓕ Ⓖ Ⓗ

Ⓐ Model No.	Ⓑ Shaft interval	
RGIB	250	250 mm

Ⓒ Index number (n)		Ⓓ Total index angle (θt)		Ⓔ Cam curve		Ⓕ Cam helix direction/dwell No.	
002	2	120	120°	S	MS curve	1	Left helix/1 dwell
003	3	150	150°		(standard)	2	Left helix/2 dwell
004	4	180	180°	C	MC curve	5	Right helix/1 dwell
005	5	210	210°		(MCV50)	6	Right helix/2 dwell
006	6	240	240°				
008	8	270	270°				
010	10	300	300°				
012	12	330	330°				
015	15						
016	16						
020	20						
024	24						
032	32						

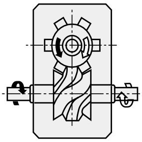
Left helix
(standard)

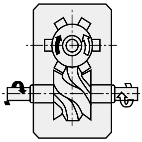
Right helix

Example of model No.

RGIB250-003330S5F1

Shaft interval.....250 mm
Index number.....3
Total index angle.....330°
Cam curve.....MS curve
Cam helix direction/dwell No. .....Right helix and single dwell interval
Shape of the output shaft .....Flange
Installation position.....Position 1

Ⓖ Shape of the output shaft		Ⓗ Installation position			
F	Flange	1	Position 1	Position 1 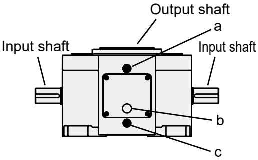 	Position 2 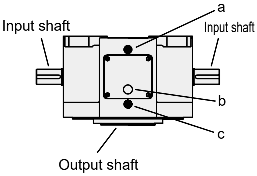
		2	Position 2		

a: Oil supply port b: Oil level gauge c: Drain port

Basic

2. Units with Options/Model No. table

Index series

RGIB 250 - 006 180 S 1 F 1 - F H N   H N S H F

Main model No.

I J K   L M N O P

Input/Output shaft specification code

Ⓘ Input shaft specification code [left shaft]		Ⓙ Input shaft specification code [right shaft]		Ⓚ Output shaft specification code	
N	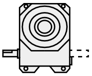	N	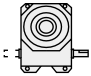	N	There is no basic output shaft option. □□N
C	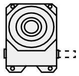	C	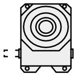		
H	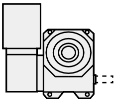	H	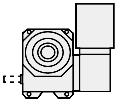		
F	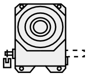	F	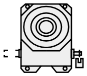		
P	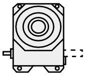	P	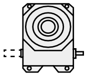		

N	Standard (with keyway)
C	Cutoff This is cut off at the stepped spot. It will protrude from the housing. Verify the dimensions with the diagram.
H	With the hollow shaft geared motor. Since the specification for the motor is required, determine with "Hollow shaft geared motor installation specification code."
F	With input shaft position detection cam and photo micro sensor.
P	Sensor shaft Without input shaft position detection cam and photo micro sensor.

ⓁⓂⓃⓄⓅ Installation specification code of the hollow shaft geared motor

Ⓛ Motor type		Ⓜ Motor output		Ⓝ Voltage		Ⓞ Reduction ratio		Ⓟ Driving method	
G	Nissei Hypoid gear	M	2.2 kW	S	Three-phase 200 V	A	1/10	F	Face mount
T	Tsubaki Emerson Hypoid gear	N	3.7 kW			B	1/15		
						C	1/20		
						D	1/25		
						E	1/30		
						F	1/40		
						G	1/50		
						H	1/60		

Basic

Standard specifications

Dimensions

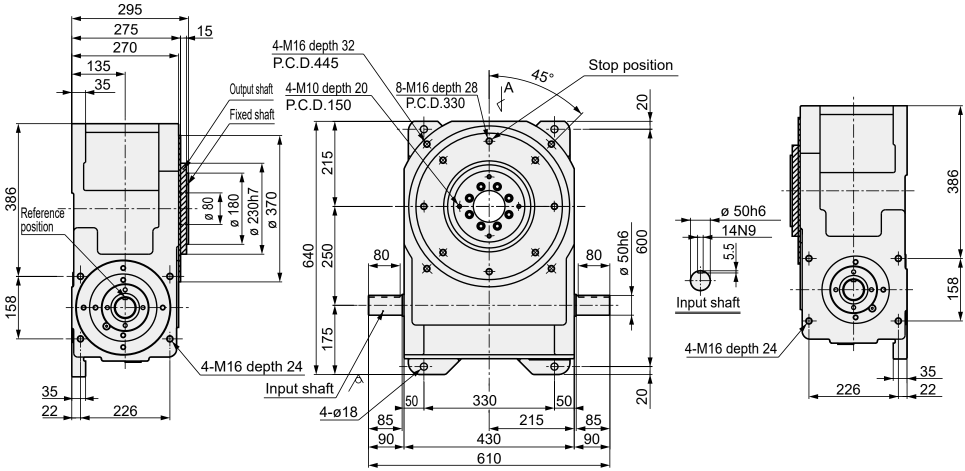

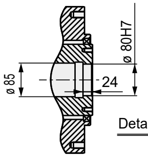

Details of fixed shaft hollow hole

section has casting surface (unpolished surface).

RGIB 250-☐☐☐☐F☐

Installation position and oil supply/drain port and oil level gauge positions

Installation position	1	2
Series	**RGIB**	**RGIB**
Dimensions	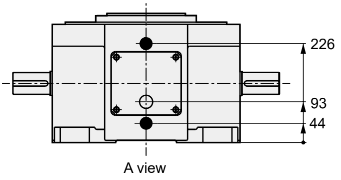 A view	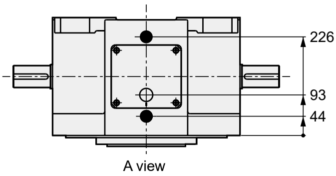 A view

- ● Oil fill/drain port (Rc3/4)
- ○ Oil level gauge (ø 30)

Characteristics

Descriptions	Unit	Characteristics	
		Output shaft	Input shaft
Allowable thrust force	N	25000	6200
Allowable radial force	N	(Note 1, 2) 12000	6700
Bending rigidity (radial force)	N/mm	(Note 3) 65700	-
Allowable bending moment	N·m	(Note 1, 2) 2000	-
Bending rigidity (bending moment)	N·m/mm	(Note 3) 14000	-
Moment of inertia	kg·m^2	2.00	0.48

Descriptions	Unit	Characteristics
Internal frictional torque (Tin)	N·m	45
Product weight	kg	335
Oil level	ℓ	6
Paint color		Silver

Accuracy

Accuracy (sec.)		
Indexing accuracy	1 dwell	± 20
	2 dwell	± 40
Repeatability		30

* For the dwell accuracy, please contact CKD.

Note 1
Be sure to confirm that the index is in the dwell interval when a radial force or bending moment is applied to the output shaft and the fixed shaft.
If a radial force or bending moment is applied while in rotation, provide an outside guide or coupling mechanism so that the load only required for rotation is applied to the output shaft of the index.

Note 2
When you extend the fixed shaft, the above characteristics does not apply.
For the characteristics, contact CKD.

Note 3
The deflection of the output shaft tip when a radial force or bending moment is applied to the output shaft and the fixed shaft should be calculated using the bending rigidity value.

List of index angles

Index series **RGIB 250** Cam curve/MS/MC

	Total index angle (θt) / Index number (n)	120	150	180	210	240	270	300	330
1 dwell	2								□
	3						□	□	○
	4					□	○	○	○
	5				□	○	○	○	○
	6			○	○	○	○	○	○
	8		○	○	○	○	○	○	○
	10	○	○	○	○	○	○	○	○
	12	○	○	○	○	○	○	○	○
	15	○	○	○	○	○	○	○	○
	16	○	○	○	○	○	○	○	○
2 dwell	16				○	○	○	○	○
	20			○	○	○	○	○	○
	24			○	○	○	○	○	○
	32			○	○	○	○	○	○

○ Cam curve / MS
□ Cam curve / MC

Dimensions with options

CAD

With the hollow shaft geared motor (2.2 kW) + sensor shaft

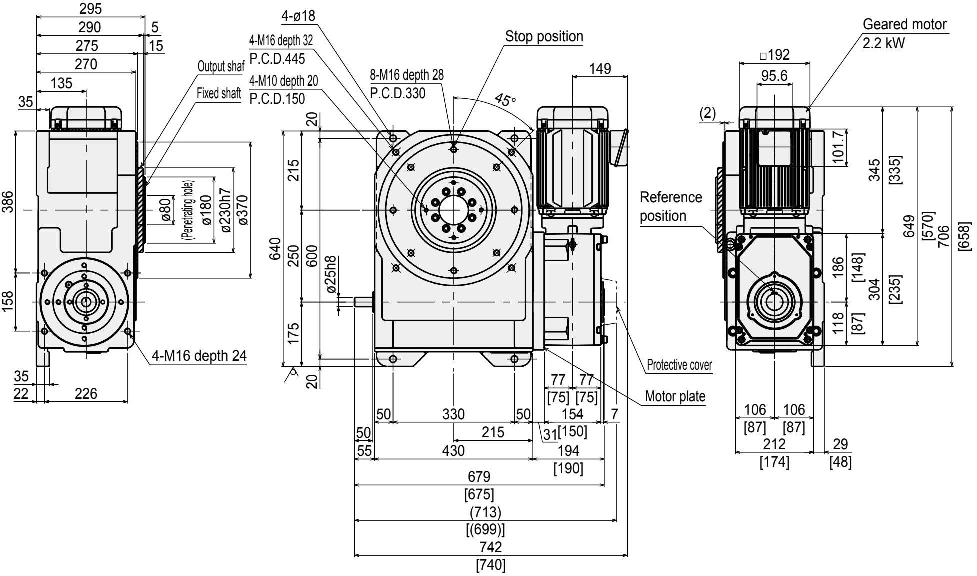

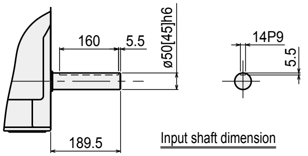

Input shaft dimension

∀ section has casting surface (black film).
Value in ( ) is eduction ratio (unpolished surface 20, 25, 30)

RGIB 250-□□□□□□□□F□-PHNGMS□F

CAD

With the hollow shaft geared motor (3.7 kW) + sensor shaft

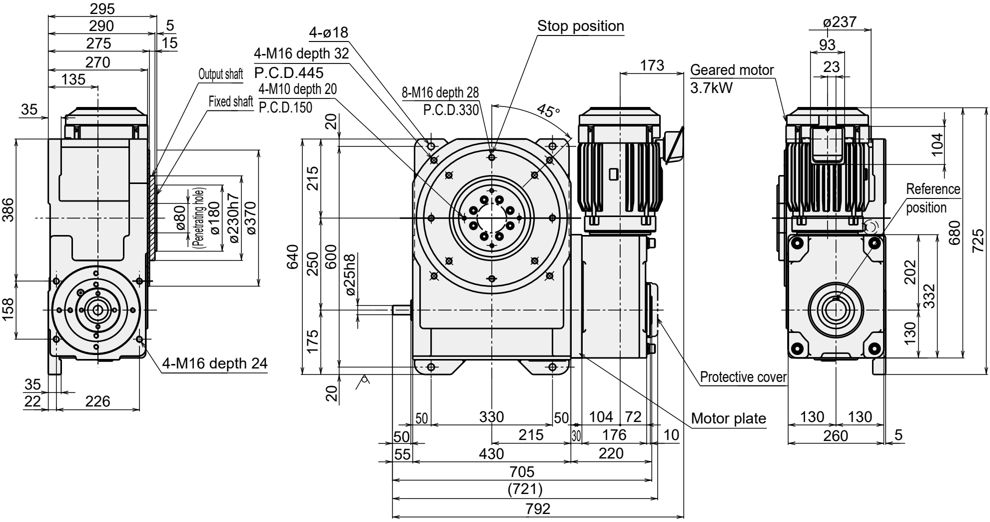

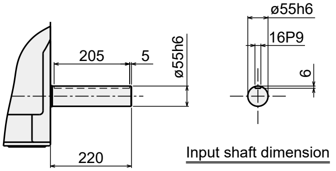

Input shaft dimension

√ section has cast surface (unpolished surface).

RG I B 250-□□□□F□-PHNTNS□F

Roller gear cam drive (standard housing)

Output torque table

Index series

● RGIB flange shaft (1 dwell)

Cam curve/MS

Index number	Total index angle (deg)	Static rated output torque (N·m)	Rated dynamic output torque (N·m)							
			Input shaft rotational speed (rpm)							
			20	40	60	80	100	120	150	200
3	330	5300	2400	2400	2250	2010	1810	1660	1460	1170
4	270	5460	2470	2460	2310	2050	1850	1680	1480	1170
	300	7690	3670	3670	3460	3110	2820	2600	2320	1950
	330	7690	3870	3860	3650	3310	3010	2780	2500	2130
5	240	5460	2630	2620	2460	2180	1970	1790	1580	1260
	270	5460	2800	2790	2630	2360	2140	1960	1740	1440
	300	5460	2950	2940	2770	2520	2290	2110	1890	1590
	330	5460	3070	3070	2900	2640	2420	2230	2010	1710
6	180	7690	3450	3440	3180	2800	2520	2290	2000	1560
	210	13700	4400	4390	4130	3660	3320	3050	2720	2260
	240	13700	4710	4700	4440	3990	3630	3350	3010	2560
	270	13700	4970	4960	4690	4260	3880	3590	3240	2800
	300	13700	5180	5170	4890	4470	4100	3790	3440	2990
	330	13700	5350	5350	5060	4630	4280	3970	3600	3150
8	150	7690	3670	3660	3370	2970	2670	2420	2110	1640
	180	7690	4040	4030	3780	3350	3040	2790	2470	2040
	210	13700	5040	5030	4750	4270	3890	3590	3230	2750
	240	13700	5300	5290	5000	4550	4150	3840	3470	3010
	270	13700	5500	5490	5190	4750	4370	4050	3670	3200
	300	13700	5650	5650	5340	4890	4540	4210	3830	3360
	330	13700	5780	5770	5460	5000	4670	4350	3970	3490
10	120	5460	2630	2610	2360	2060	1830	1630	1350	908
	150	5460	2950	2930	2730	2410	2170	1970	1720	1340
	180	7690	4440	4430	4180	3740	3400	3130	2800	2360
	210	7690	4670	4670	4410	4000	3650	3370	3040	2620
	240	7690	4850	4840	4580	4180	3840	3560	3230	2800
	270	7690	4980	4970	4700	4300	4000	3710	3370	2950
	300	13700	5920	5920	5600	5130	4780	4470	4070	3590
	330	13700	6010	6010	5680	5210	4860	4590	4180	3690
12	120	5070	2400	2390	2180	1910	1700	1520	1280	895
	150	5460	3180	3170	2970	2630	2380	2170	1920	1550
	180	5460	3370	3360	3170	2860	2600	2390	2140	1800
	210	5460	3510	3500	3310	3020	2760	2550	2300	1970
	240	5460	3610	3600	3400	3110	2880	2670	2420	2100
	270	7690	5140	5140	4860	4450	4150	3870	3520	3100
	300	7690	5220	5210	4930	4520	4220	3970	3620	3190
	330	7690	5280	5270	4990	4570	4270	4030	3700	3270
15	120	3720	2120	2110	1960	1720	1530	1380	1170	849
	150	3720	2270	2260	2130	1900	1720	1570	1380	1100
	180	5070	2920	2920	2750	2510	2280	2100	1880	1600
	210	5070	3000	3000	2830	2590	2390	2210	1990	1720
	240	5070	3060	3050	2880	2640	2460	2290	2070	1800
	270	5070	3090	3090	2920	2670	2490	2350	2130	1870
	300	5070	3120	3120	2950	2700	2520	2380	2180	1920
	330	5070	3140	3140	2970	2720	2540	2400	2220	1960
16	120	2650	1740	1730	1600	1400	1250	1120	939	658
	150	3720	2310	2300	2170	1940	1750	1600	1410	1140
	180	3720	2390	2390	2250	2050	1870	1720	1540	1290
	210	3720	2450	2450	2310	2110	1950	1800	1620	1390
	240	5070	3080	3070	2910	2660	2480	2310	2100	1830
	270	5070	3110	3110	2940	2690	2510	2370	2160	1890
	300	5070	3140	3130	2960	2720	2530	2390	2200	1940
	330	5070	3160	3150	2980	2730	2550	2410	2240	1980

● RGIB flange shaft (1 dwell)

Cam curve/MC

Index number	Total index angle (deg)	Static rated output torque (N·m)	Rated dynamic output torque (N·m)							
			Input shaft rotational speed (rpm)							
			20	40	60	80	100	120	150	200
2	330	5140	2330	2320	2100	1830	1620	1440	1190	782
3	270	5460	2520	2500	2270	1990	1760	1570	1300	882
	300	5460	2680	2660	2450	2150	1930	1740	1480	1100
4	240	7690	3870	3860	3530	3110	2790	2530	2190	1680
5	210	5460	2900	2880	2620	2300	2050	1830	1550	1100

● RGIB flange shaft (2 dwell)

Cam curve/MS

Index number	Total index angle (deg)	Static rated output torque (N·m)	Rated dynamic output torque (N·m)							
			Input shaft rotational speed (rpm)							
			10	20	30	40	50	60	75	100
16	210	7690	4320	4320	4080	3740	3470	3210	2910	2540
	240	13700	5300	5290	5010	4590	4280	4000	3640	3210
	270	13700	5500	5490	5200	4760	4440	4200	3840	3390
	300	13700	5650	5650	5350	4900	4580	4320	3990	3540
	330	13700	5780	5780	5470	5010	4680	4420	4120	3660
20	180	7690	4440	4440	4190	3830	3540	3280	2970	2590
	210	7690	4670	4670	4420	4040	3770	3520	3200	2810
	240	7690	4850	4840	4580	4200	3920	3700	3380	2980
	270	7690	4980	4980	4710	4310	4030	3810	3520	3110
	300	13700	5920	5920	5600	5130	4800	4530	4230	3760
	330	13700	6010	6010	5690	5210	4870	4610	4300	3860
24	180	5460	3370	3370	3180	2910	2710	2510	2280	1980
	210	5460	3510	3510	3320	3030	2830	2660	2420	2120
	240	5460	3610	3610	3410	3120	2910	2750	2530	2230
	270	7690	5140	5140	4860	4460	4160	3930	3670	3250
	300	7690	5220	5220	4940	4520	4230	4000	3730	3340
	330	7690	5280	5270	4990	4580	4280	4040	3770	3420
32	180	3720	2390	2390	2260	2070	1930	1810	1640	1420
	210	5070	3030	3030	2860	2620	2450	2310	2120	1870
	240	5070	3080	3080	2910	2670	2490	2350	2190	1940
	270	5070	3110	3110	2940	2700	2520	2380	2220	1990
	300	5070	3140	3140	2970	2720	2540	2400	2240	2030
	330	5070	3160	3160	2990	2740	2560	2420	2260	2060

Parallel cam drive

● Common specifications

1. Rotational direction of input/output shaft

The parallel cam index drive's output shaft rotates in the direction opposite the input shaft (cam shaft) viewed from the input shaft side. The input shaft allows either clockwise or counterclockwise rotation.

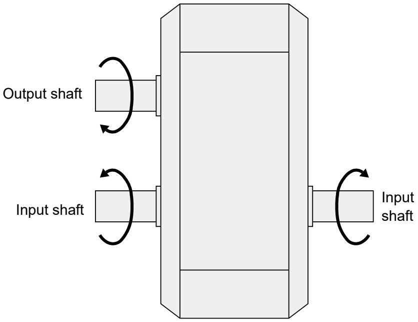

Reference: HO reducer installation and shaft rotation direction

Left shaft installation (on housing side)		Right shaft installation (on housing plate side)	
A 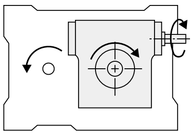	J 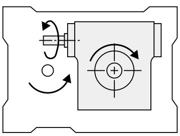	E 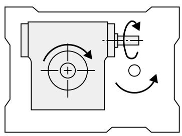	N 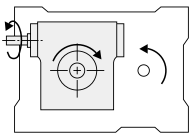
B 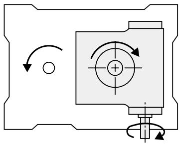	K 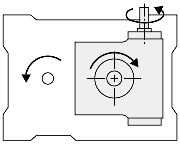	F 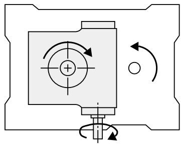	P 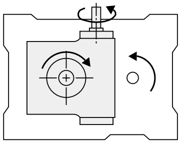
C 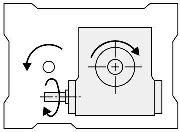	L 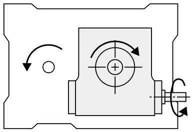	G 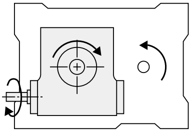	Q 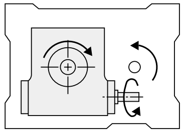
D 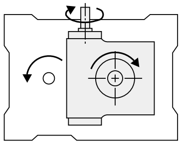	M 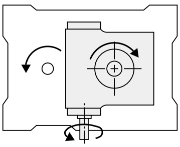	H 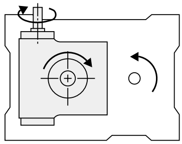	R 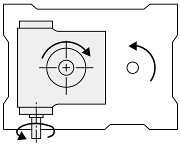

* Combinations where the rotation is opposite the direction of the arrows are also possible.

2. Installation position and input/output shaft layout

Shaft layout code	Meaning
S	Standard layout
R	Reverse layout Note: Output shaft comes out on housing plate side.
1	Output shaft comes out opposite to the input shaft.
2	Output shaft comes out on the same side as the input shaft.
3	Input shaft comes out on both sides.

● Common specifications

PCIS shaft layout and installation position   PCIS ***-*** *** ** $\overset{\text{GH}}{**}$

Shaft layout G Position H	S1 (Model No. display: 1)	S2 (Model No. display: 2)	S3 (Model No. display: 3)
1	1 1 	2 1 	3 1 
2	1 2 	2 2 	3 2 
3	1 3 	2 3 	3 3 
4	1 4 	2 4 	3 4 
5	1 5 	2 5 	3 5 
6	1 6 	2 6 	3 6 

Input shaft	▬
Output shaft	▭
Oil filler	⬢
Oil level gauge	◓
Drain port	⬡
Housing plate	▨

PCIS shaft layout and installation position

PCIS ***-*** *** ** $\overset{\text{GH}}{**}$

Shaft layout G Position H	R1 (Model No. display: 4)	R1 (Model No. display: 5)	R3 (Model No. display: 6)
1	4 1 	5 1 	6 1 
2	4 2 	5 2 	6 2 
3	4 3 	5 3 	6 3 
4	4 4 	5 4 	6 4 
5	4 5 	5 5 	6 5 
6	4 6 	5 6 	6 6 

Input shaft 
Output shaft 
Oil filler ⬡
Oil level gauge ◓
Drain port ○
Housing plate ▨

3. Diameter of the stepped section of the input/output shaft

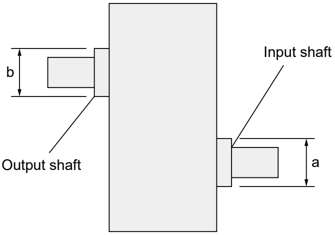

Dimensions / Size	a	b
040	ø 15	ø 15
050	ø 17	ø 17
063	ø 22	ø 22
080	ø 28	ø 28
100	ø 35	ø 35
125	ø 40	ø 40
160	ø 48	ø 48
200	ø 65	ø 65
250	ø 75	ø 75

4. Optional worm reducer

List of standard mounting worm reducers

Main model No.		HO reducer Size	Reduction ratio Value in ( ) represents the special reduction ratio	TE reducer Size	Reduction ratio
PCIS PCOS	040	-	-	-	-
	050	HO 32	1/20, 1/40, 1/60 (1/30, 1/50)	TE 35	1/10, 1/20, 1/30 1/40, 1/50, 1/60
	063	HO 40	1/20, 1/40, 1/60 (1/30, 1/50)	TE 42	1/10, 1/20, 1/30 1/40, 1/50, 1/60
	080	HO 50	1/20, 1/30, 1/40 1/50, 1/60	TE 51	1/10, 1/20, 1/30 1/40, 1/50, 1/60
	100	HO 60	1/20, 1/30, 1/40 1/50, 1/60	TE 63	1/10, 1/20, 1/30 1/40, 1/50, 1/60
	125	HO 80	1/20, 1/30, 1/40 1/50, 1/60	TE 80	1/10, 1/20, 1/30 1/40, 1/50, 1/60
	160	HO100	1/20, 1/30, 1/40 1/50, 1/60	TE100	1/10, 1/20, 1/30 1/40, 1/50, 1/60
	200	HO100	1/20, 1/30, 1/40 1/50, 1/60	TE100	1/10, 1/20, 1/30 1/40, 1/50, 1/60
		HO135	1/20, 1/40, 1/60 (1/30, 1/50)	TE150	1/10, 1/20, 1/30 1/40, 1/50, 1/60
	250	HO135	1/20, 1/40, 1/60 (1/30, 1/50)	TE150	1/10, 1/20, 1/30 1/40, 1/50, 1/60

* The above indicates the combinations of standard installations. Check the reducer load torque (Ter) and the reducer rated output torque before use.

5. Optional/Torque saver (TSF4 to TSF18) Torque guard (TGX20 to TGX70) + release detection proximity switch

Proximity switch model No.

Torque saver Torque guard	SW model No.	Manufacturer
TSF4	TL-W3MC1	OMRON
TSF5 to TSF18	TL-W5MC1	
TGX20 to TGX70		

Parallel cam drive

1. Standard model No.

Index series

PCIS	050 –	002	120	C	1	3	4
Ⓐ	Ⓑ	Ⓒ	Ⓓ	Ⓔ	Ⓕ	Ⓖ	Ⓗ

Ⓐ Model	Ⓑ Distance between shafts		Ⓒ Indexing number (n)		Ⓓ Total index angle (θt)		Ⓔ Cam curve		Ⓕ Number of dwell intervals of the cam		Ⓖ Input/Output layout	
PCIS	040	40 mm	001	1	090	90°	S	MS curve (Standard)	1	1 dwell Index number: 1.2.3.4	1	S1
	050	50 mm	002	2	120	120°					2	S2
	063	63 mm	003	3	150	150°	C	MC curve (MCV50)	2	2 dwell Index number: 6.8	3	S3
	080	80 mm	004	4	180	180°					4	R1
	100	100 mm	006	6	210	210°					5	R2
	125	125 mm	008	8	240	240°					6	R3
	160	160 mm			270	270°						
	200	200 mm			300	300°						
	250	250 mm			330	330°						
										For details of the timing chart, refer to B-7.		When a torque saver (optional) and a torque guard (optional) are added, the code will be either 1 (S1) or 4 (R1).

Example of model No. (1)

PCIS063-008270S216

Shaft interval	63 mm
Index number	8
Total index angle	270° (135° × 2)
Cam curve	MS curve
Dwell No. of the cam	2 dwell
Input/Output layout	S1
Installation position	Position #6

■S1 (standard)

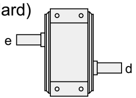

■S2 (standard)

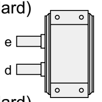

■S3 (standard)

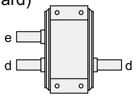

■R1

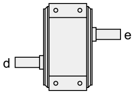

■R2

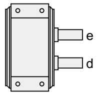

■R3

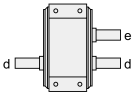

Ⓗ Installation position

1	Position #1
2	Position #2
3	Position #3
4	Position #4
5	Position #5
6	Position #6

Depending on the orientation of the index drive, the oil supply port, the drain port and the oil level gauge will be located at different positions and so it is necessary to choose one of the orientations from (1) to (6).

■Position #1

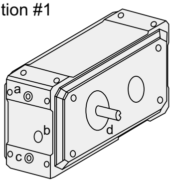

■Position #2

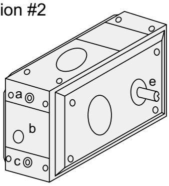

■Position #3

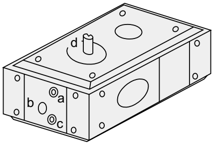

■Position #4

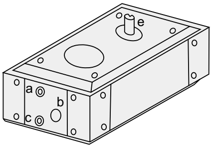

■Position #5

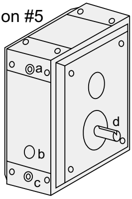

■Position #6

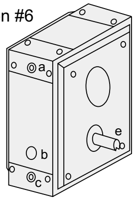

a: Oil supply port b: Oil level gauge c: Drain port d: Input shaft e: Output shaft

Parallel cam drive

2-1. Model No. with options

Common for index and oscillating series

PCIS 100 – 001 300 S 1 1 1 – N W F 0 6 6 N G 08 A

Main model No.

I J K　L M N O P　Q R

Input/Output shaft specification code					
Ⓘ Input shaft specification code (left shaft)		Ⓙ Input shaft specification code (right shaft)		Ⓚ Output shaft specification code	
N	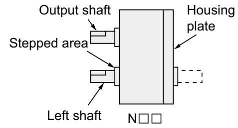	N	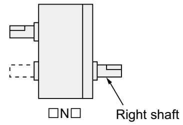	N	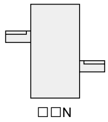
K	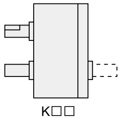	K	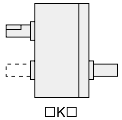	K	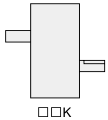
W / E	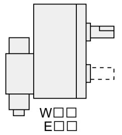	W / E	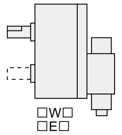	F / X	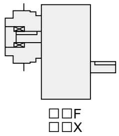
V / L	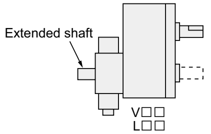	V / L	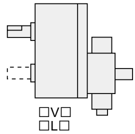	S / Y	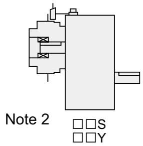
N K W E V L	Standard (with keyway) No keyway With the worm reducer (W: HO reducer, E: TE reducer) * Since the specification for the worm reducer is required, determine "Worm reducer installation specification code." With the worm reducer (Extended shaft: HO reducer, L: TE reducer) * Since the specification for the worm reducer is required, determine "Worm reducer installation specification code."			N K F X S Y	Standard (with keyway) No keyway (straight shaft) With Torque saver (TSF) With Torque guard (TGX) With Torque saver (TSF) + proximity switch for release detection With Torque guard (TGX) + proximity switch for release detection Since the specifications for a torque saver and a torque guard are required when F, X, S, or Y is selected, determine "Torque saver/guard installation specification code."

■ Relationship between the input/output shaft layout and the input/output shaft specification code

Input/Output shaft Layout	S1			S2			S3			R1			R2			R3		
	Ⓘ	Ⓙ	Ⓚ	Ⓘ	Ⓙ	Ⓚ	Ⓘ	Ⓙ	Ⓚ	Ⓘ	Ⓙ	Ⓚ	Ⓘ	Ⓙ	Ⓚ	Ⓘ	Ⓙ	Ⓚ
Available code	N	N K W V E L	N K F X S Y	N K	N	N K	N K	N K W V E L	N K	N K W V E L	N	N K F X S Y	N	N K	N K	N K W V E L	N K	N K

▼ When a worm reducer is installed

Ⓛ Ⓜ Ⓝ Ⓞ Ⓟ Worm reducer installation specification code					
Ⓛ Ⓜ Reducer size		Ⓝ Reduction ratio		Ⓞ Clutch/Brake:	
03	HO32, TE35	1	1/10 (TE reducer only)	Y	Clutch/Brake: Yes
04	HO40, TE42	2	1/20		
05	HO50, TE51	3	1/30		
06	HO60, TE63	4	1/40	N	Clutch/Brake: No
08	HO80, TE80	5	1/50		
10	HO100, TE100	6	1/60		
13	HO135, ——				
15	——, TE150		* Those of 1/30 and 1/50 for HO32, HO40 and HO135 have special ratio. Verify the delivery schedule.		
	* Refer to D-551 to 588.				

Ⓟ Mounting direction

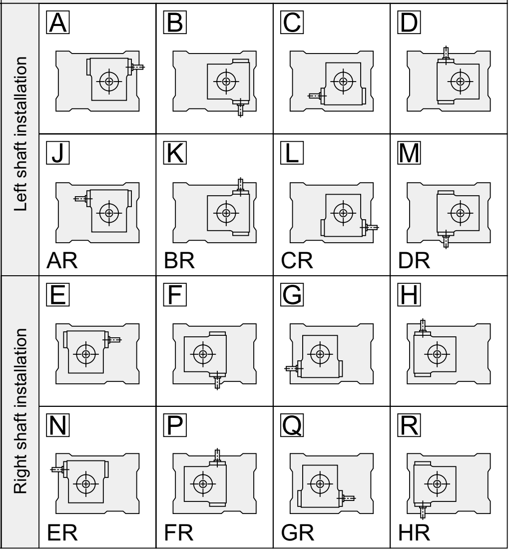

* While a torque saver/guard is installed onto the output shaft and when none of the worm reducer can be installed onto the input shaft, insert a hyphen "-" at Ⓛ and continue with the torque saver/guard installation specification code.
Example: PCIS063-003270S111-NNF-06D

PCIS100-001300S111-NW F066NG **08 A**

Ⓠ Ⓡ

▼ When a torque saver is installed

Ⓠ Ⓡ Torque saver mounting specification code				Application index size
Ⓠ TSF size		Ⓡ Release torque range		
04	TSF4	A B C D	A B C D	040
05	TSF5			050/063
06	TSF6			063/080
08	TSF8			100
11	TSF11			125
14	TSF14			160
18	TSF18			200/250

▼ When a torque guard is installed

Ⓠ Ⓡ Torque guard mounting specification code				Application index size
Ⓠ TGX size		Ⓡ Trip torque range		
20	TGX20	L M H	LC MC HC	050/063
35	TGX35			080
50	TGX50			100
70	TGX70			125

Note 1: When you specify the release (trip) torque of a torque saver/guard, notify CKD of the value. Otherwise, the product will be shipped adjusted at the min. value within the adjusting range.
* Refer to D-589 to 619.

Note 2: The proximity switch for release detection of a torque saver/guard is the NO type. NC type is also available.

2-2. Examples of model numbers with options / 3. Custom specification model No.

When you place an order with a model number, ensure that it exactly matches what you order.
Even if 1 letter is incorrectly written, the product will be different with different specifications.
In order for us to deliver what you really want, carefully determine the model number referring to the following examples.

Example of model No. (2)

PCIS250-004090S135-KKK
Input shaft specification
  Left shaft: No keyway
  Right shaft: No keyway
Output shaft specification
  No keyway

Example of model No. (3)

PCIS160-003180S111-NWN104YQ
Input shaft specification
  Left shaft: Standard
  Right shaft: Worm reducer installed
Output shaft specification: Standard

Worm reducer installation specification
  Reducer size: HO100
  Reduction ratio: 1/40
  Clutch/Brake: Yes
  Mounting direction: Q

Example of model No. (4)

PCIS040-004090S115-NNS-04A
Input shaft specification
  Left shaft: Standard
  Right shaft: Standard
Output shaft specification: Torque saver + proximity switch for release detection installed

Torque saver mounting specification
  TSF size: TSF4
  Release torque range: A

Example of model No. (5)

PCIS160-001300S141-WNF102YL14C
Input shaft specification
  Left shaft: Worm reducer installed
  Right shaft: Standard
Output shaft specification: Torque saver installed

Worm reducer installation specification
  Reducer size: HO100
  Reduction ratio: 1/20
  Clutch/Brake: Yes
  Mounting direction: L

Torque saver mounting specification
  TSF size: TSF14
  Release torque range: C

● Special specification model number Common for index and oscillating series

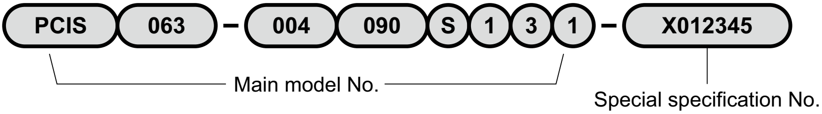

* Add "-X (6 digit number)" after the main model No. as the special specification number.
The special specification model number shall be determined after a consultation with the customer.
Options other than the standard are available upon request. Please provide us with the specifications.
* High speed specifications (input shaft rotational speed of 200 rpm or higher) are deemed to be special specifications.

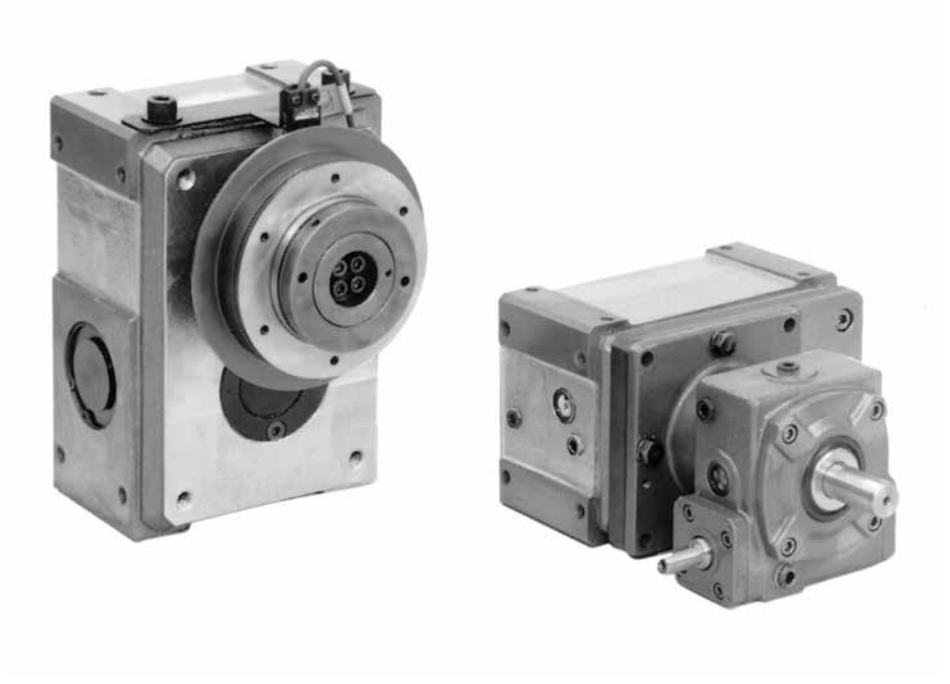

Parallel cam drive

1. Standard model No. Oscillating series

PCOS	125	–	030	120	S	T	3	4
Ⓐ	Ⓑ		Ⓒ	Ⓓ	Ⓔ	Ⓕ	Ⓖ	Ⓗ

Ⓐ Model	Ⓑ Distance between shafts		Ⓒ Oscillating angle (ψ)		Ⓓ Total index angle (θt)		Ⓔ Cam curve	
PCOS	040	40 mm	015	15°	060	60° (30°×2)	S	MS curve (Standard)
	050	50 mm	030	30°	090	90° (45°×2)		
	063	63 mm	045	45°	120	120° (60°×2)	C	MC curve (MCV50)
	080	80 mm			180	180° (90°×2)		
	100	100 mm			240	240° (120°×2)		
	125	125 mm			300	300° (150°×2)		
	160	160 mm			360	360° (180°×2)		
	200	200 mm						
	250	250 mm						

Ⓕ Orbit pattern	
	When the input shaft starts to rotate from the rotation reference point, the output shaft rotates in sequence from 1 and 2 as in the figure.
T (Standard)	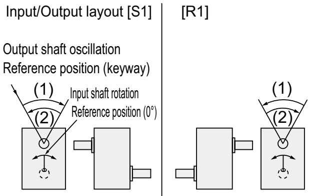
S	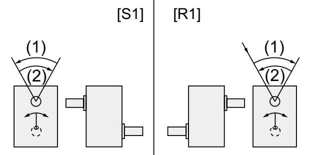
	For details of the timing chart, refer to B-7.

Example of model No. (1)

PCOS080-030240ST15

Shaft interval	80 mm
Oscillating angle	30°
Total index angle	240° (120° × 2)
Cam curve	MS curve
Orbit pattern	T
Input/Output layout	S1
Installation position	Position #5

Ⓖ Input/Output layout		
1	S1	■S1 (standard) 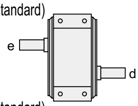
2	S2	■S2 (standard) 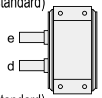
3	S3	■S3 (standard) 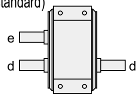
4	R1	■R1 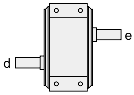
5	R2	■R2 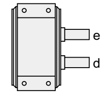
6	R3	■R3 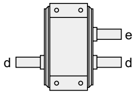

Ⓗ Installation position		
1	Position #1	■Position #1 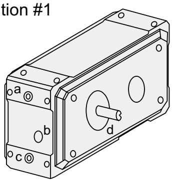
2	Position #2	■Position #2 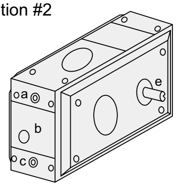
3	Position #3	■Position #3 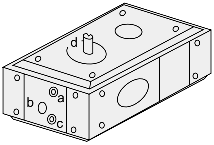
4	Position #4	■Position #4 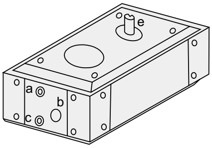
5	Position #5	■Position #5 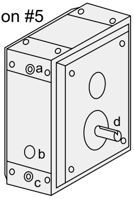
6	Position #6	■Position #6 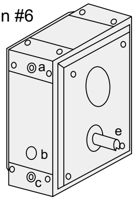

Depending on the orientation of the index drive, the oil supply port, the drain port and the oil level gauge will be located at different positions and so it is necessary to choose one of the orientations from (1) to (6).

a: Oil supply port b: Oil level gauge c: Drain port d: Input shaft e: Output shaft

* When a torque saver (optional) and a torque guard (optional) are added, the code will be either 1 (S1) or 4 (R1).

Index	**PC I S 040**
Oscillator	**PCOS 040**

● Standard specifications

Dimensions

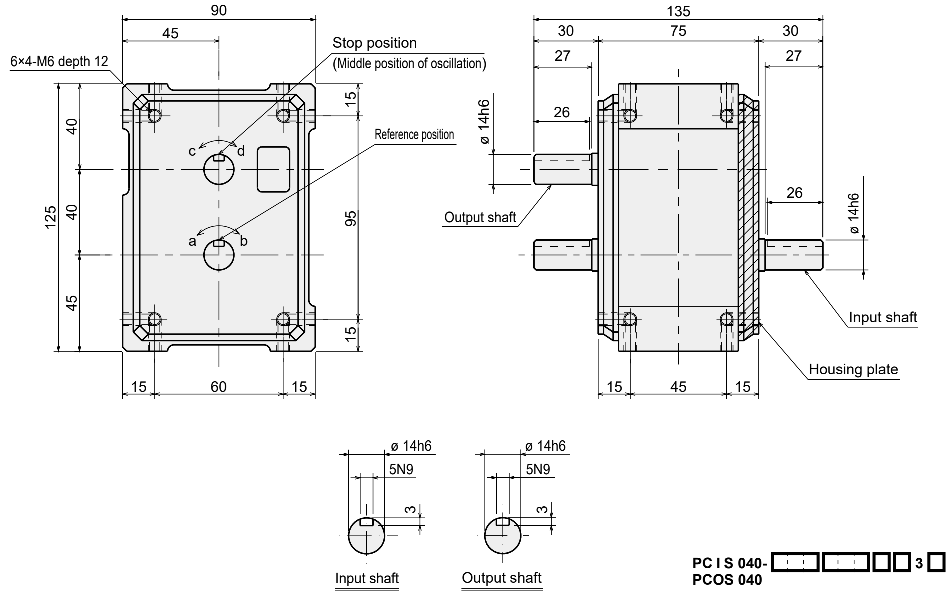

PC I S 040-□□□□3□
PCOS 040

Installation position and oil supply/drain port and oil level gauge positions

● Oil fill/drain port (Rc1/4)
○ Oil level gauge (ø 20)

Installation position	1	2	3
Series	**PCIS/PCOS**	**PCIS/PCOS**	**PCIS/PCOS**
Dimensions	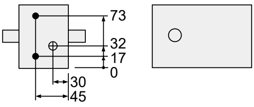	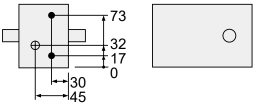	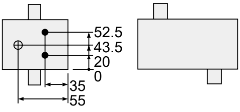

Installation position	4	5	6
Series	**PCIS/PCOS**	**PCIS/PCOS**	**PCIS/PCOS**
Dimensions	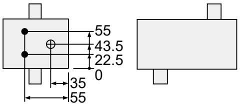	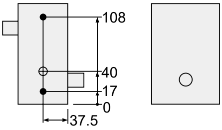	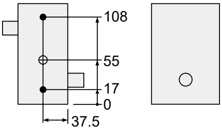

Characteristics

Descriptions	Unit	Characteristics	
		Output shaft	Input shaft
Allowable thrust force	N	480	280
Allowable radial force	N	350	200
Allowable bending moment	N·m	18	-
Moment of inertia	$kg·m^2$	1.09×10^{-4}	1.29×10^{-4}

Descriptions	Unit	Characteristics
Internal frictional torque (Tin)	N·m	1.1
Product weight	kg	3
Oil level	ℓ	0.12
Paint color		Silver

Accuracy

Index accuracy (sec.)		
Indexing accuracy	1 dwell	± 90
	2 dwell	± 180
	3 dwell	-
	4 dwell	-
Repeatability		90

Oscillating accuracy (sec.)	
Indexing accuracy	± 180
Repeatability	90

* For the dwell accuracy, please contact CKD.

List of index angles

Index series **PCIS 040** Cam curve/MS

Total index angle (θt) / Index number (n)		90	120	150	180	210	240	270	300	330
1 dwell	1								○	○
	2			○	○	○	○	○	○	○
	3	○	○	○	○	○	○	○	○	○
	4	○	○	○	○	○	○	○	○	○
2 dwell	6		○	○	○	○	○	○	○	○
	8	○	○	○	○	○	○	○	○	○

Cam curve/MC

Total index angle (θt) / Index number (n)		90	120	150	180	210	240	270	300	330
1 dwell	1					○	○	○	○	○
	2		○	○	○	○	○	○	○	○

Oscillating series **RCOS 040** Cam curve/MS

Total index angle (θt) / Oscillating angle (ψ)	60	90	120	180	240	300	360
45			○	○	○	○	○
30		○	○	○	○	○	○
15	○	○	○	○	○	○	○

Dimensions with options

With Torque saver (TSF4)

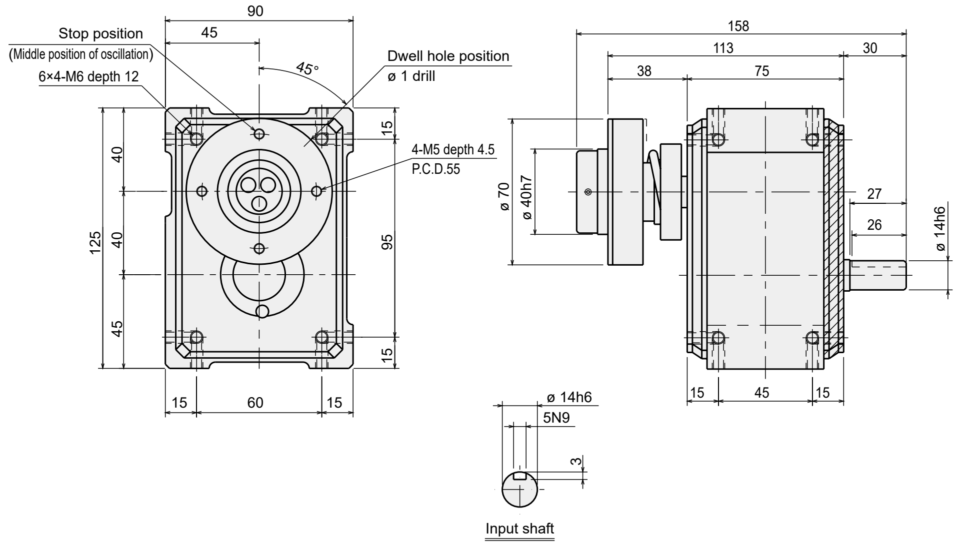

PC I S 040-☐☐☐☐1☐-NNF-04☐
PCOS 040

● Standard specifications

Dimensions

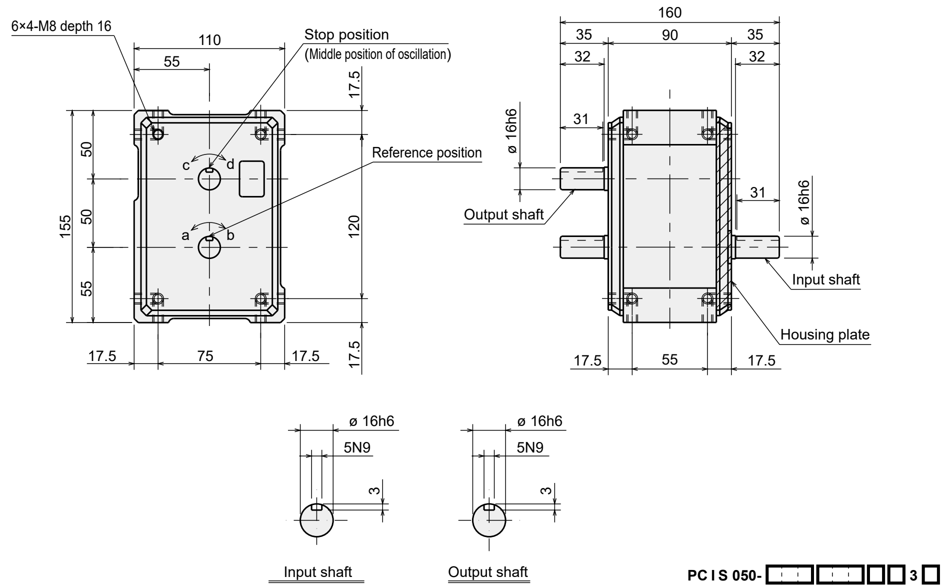

PC I S 050-☐☐☐☐**3**☐
PCOS 050

Installation position and oil supply/drain port and oil level gauge positions

● Oil fill/drain port (Rc$^1/_4$)
○ Oil level gauge (ø 20)

Installation position	1	2	3
Series	PCIS/PCOS	PCIS/PCOS	PCIS/PCOS
Dimensions	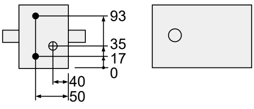	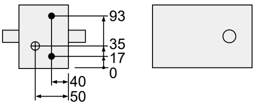	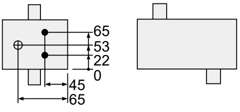

Installation position	4	5	6
Series	PCIS/PCOS	PCIS/PCOS	PCIS/PCOS
Dimensions	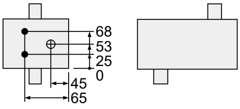	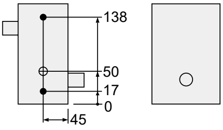	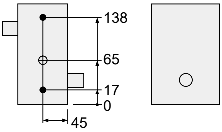

Characteristics

Descriptions	Unit	Characteristics	
		Output shaft	Input shaft
Allowable thrust force	N	1100	650
Allowable radial force	N	780	520
Allowable bending moment	N·m	26	-
Moment of inertia	$kg{\cdot}m^2$	3.51×10^{-4}	3.18×10^{-4}

Descriptions	Unit	Characteristics
Internal frictional torque (Tin)	N·m	1.7
Product weight	kg	6
Oil level	ℓ	0.2
Paint color		Silver

Accuracy

Index accuracy (sec.)		
Indexing accuracy	1 dwell	± 60
	2 dwell	± 140
	3 dwell	-
	4 dwell	-
Repeatability		60

Oscillating accuracy (sec.)	
Indexing accuracy	± 140
Repeatability	60

* For the dwell accuracy, please contact CKD.

List of index angles

Index series **PCIS 050** Cam curve/MS

Total index angle (θt) / Index number (n)		90	120	150	180	210	240	270	300	330
1 dwell	1								○	○
	2			○	○	○	○	○	○	○
	3	○	○	○	○	○	○	○	○	○
	4	○	○	○	○	○	○	○	○	○
2 dwell	6		○	○	○	○	○	○	○	○
	8	○	○	○	○	○	○	○	○	○

Cam curve/MC

Total index angle (θt) / Index number (n)		90	120	150	180	210	240	270	300	330
1 dwell	1					○	○	○	○	○
	2		○	○	○	○	○	○	○	○

Oscillating series **RCOS 050** Cam curve/MS

Total index angle (θt) / Oscillating angle (ψ)	60	90	120	180	240	300	360
45			○	○	○	○	○
30		○	○	○	○	○	○
15	○	○	○	○	○	○	○

Dimensions with options

With worm reducer (with HO32-C/B)

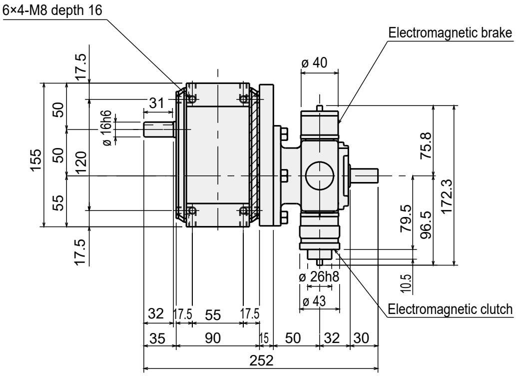

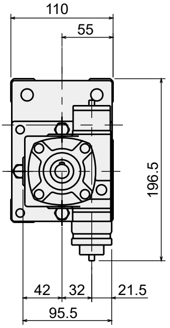

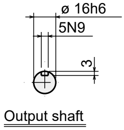

Output shaft

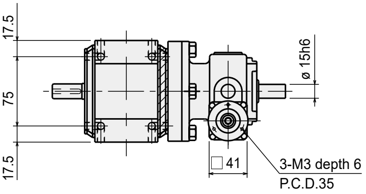

PC I S 050-☐☐☐☐☐☐☐☐1☐-NVN03☐YG
PCOS 050

With worm reducer (without HO32-C/B)

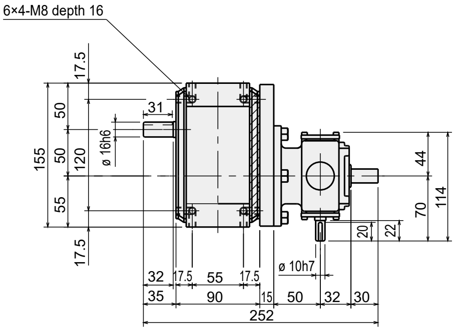

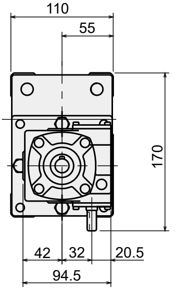

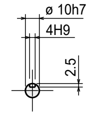

Reducer input shaft

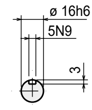

Output shaft

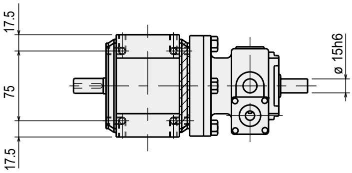

PC I S 050-☐☐☐☐☐☐☐☐1☐-NVN03☐NG
PCOS 050

With Torque saver (TSF5)

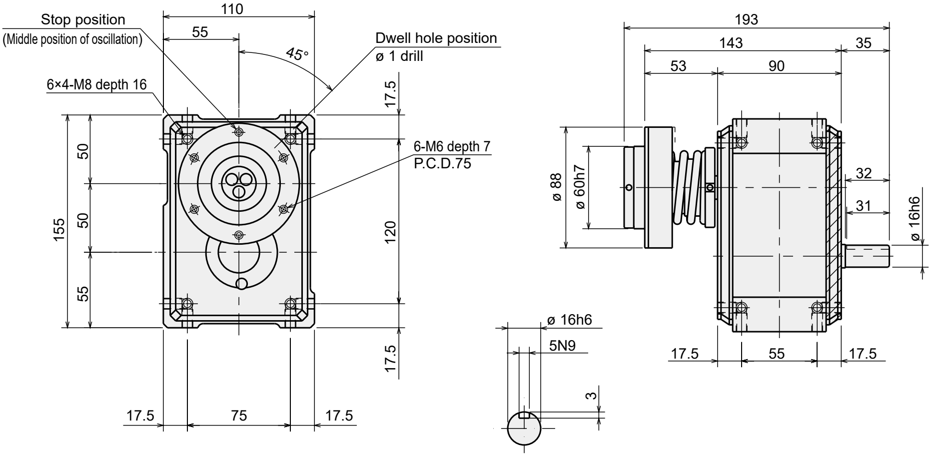

Input shaft

PC I S 050-□□□□ 1 □ -NNF-05 □
PCOS 050

Index	PC I S 063
Oscillator	PCOS 063

● Standard specifications

Dimensions

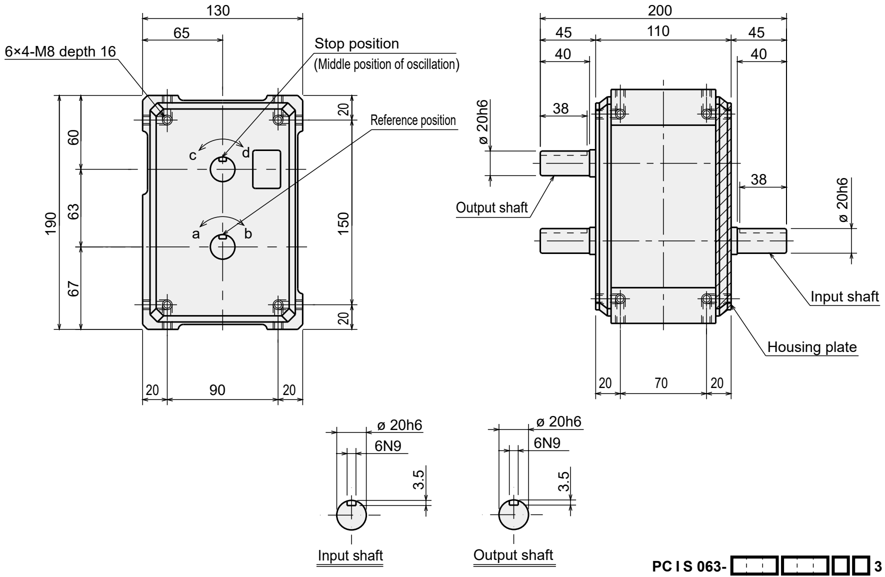

PC I S 063-☐☐☐☐3☐
PCOS 063

Installation position and oil supply/drain port and oil level gauge positions

● Oil fill/drain port (Rc$^{1}/_{4}$)
○ Oil level gauge (ø 20)

Installation position	1	2	3
Series	**PCIS/PCOS**	**PCIS/PCOS**	**PCIS/PCOS**
Dimensions	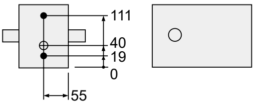	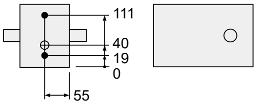	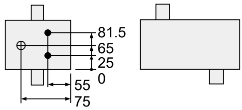

Installation position	4	5	6
Series	**PCIS/PCOS**	**PCIS/PCOS**	**PCIS/PCOS**
Dimensions	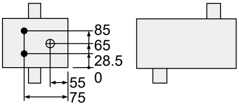	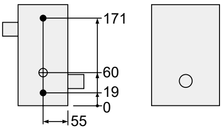	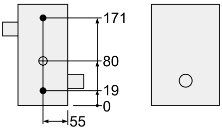

Characteristics

Descriptions	Unit	Characteristics	
		Output shaft	Input shaft
Allowable thrust force	N	2500	1800
Allowable radial force	N	1800	1400
Allowable bending moment	N·m	52	-
Moment of inertia	$kg{\cdot}m^2$	8.01×10^{-4}	1.27×10^{-3}

Descriptions	Unit	Characteristics
Internal frictional torque (Tin)	N·m	3.1
Product weight	kg	11
Oil level	ℓ	0.4
Paint color		Silver

Accuracy

Index accuracy (sec.)		
Indexing accuracy	1 dwell	±60
	2 dwell	±90
	3 dwell	-
	4 dwell	-
Repeatability		60

Oscillating accuracy (sec.)	
Indexing accuracy	±90
Repeatability	60

* For the dwell accuracy, please contact CKD.

List of index angles

Index series **PCIS 063** Cam curve/MS

	Total index angle (θt) / Index number (n)	90	120	150	180	210	240	270	300	330
1 dwell	1								○	○
	2			○	○	○	○	○	○	○
	3	○	○	○	○	○	○	○	○	○
	4	○	○	○	○	○	○	○	○	○
2 dwell	6		○	○	○	○	○	○	○	○
	8	○	○	○	○	○	○	○	○	○

Cam curve/MC

	Total index angle (θt) / Index number (n)	90	120	150	180	210	240	270	300	330
1 dwell	1					○	○	○	○	○
	2		○	○	○	○	○	○	○	○

Oscillating series **PCOS 063** Cam curve/MS

Total index angle (θt) / Oscillating angle (ψ)	60	90	120	180	240	300	360
45			○	○	○	○	○
30		○	○	○	○	○	○
15	○	○	○	○	○	○	○

Dimensions with options

With worm reducer (with HO40-C/B)

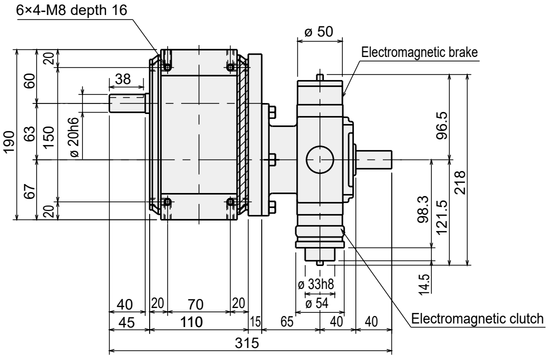

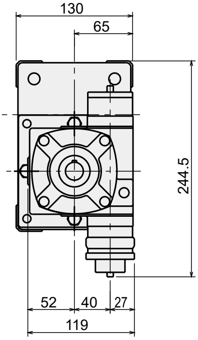

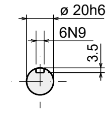

Output shaft

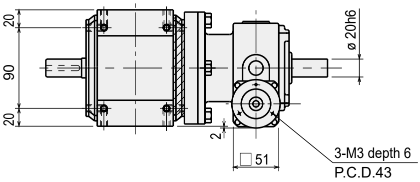

PC I S 063-☐☐☐☐☐☐☐☐ 1 ☐ -NVN04 ☐ YG
PCOS 063

With worm reducer (without HO40-C/B)

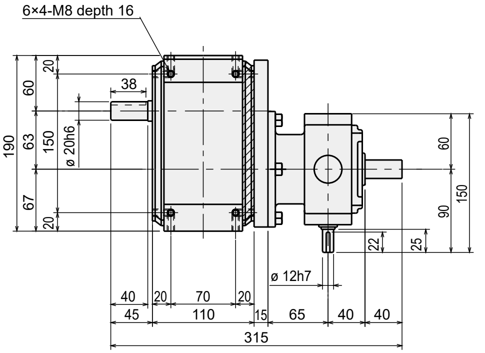

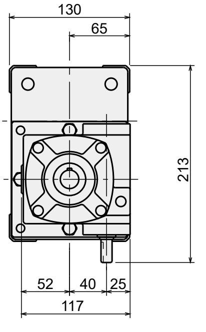

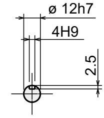

Reducer input shaft

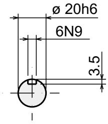

Output shaft

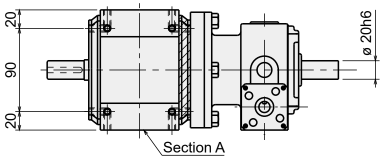

Note: Reducer may protrude from the housing end face (section A).

PC I S 063-☐☐☐☐☐☐☐☐ 1 ☐ -NVN04 ☐ NG
PCOS 063

With Torque saver (TSF5)

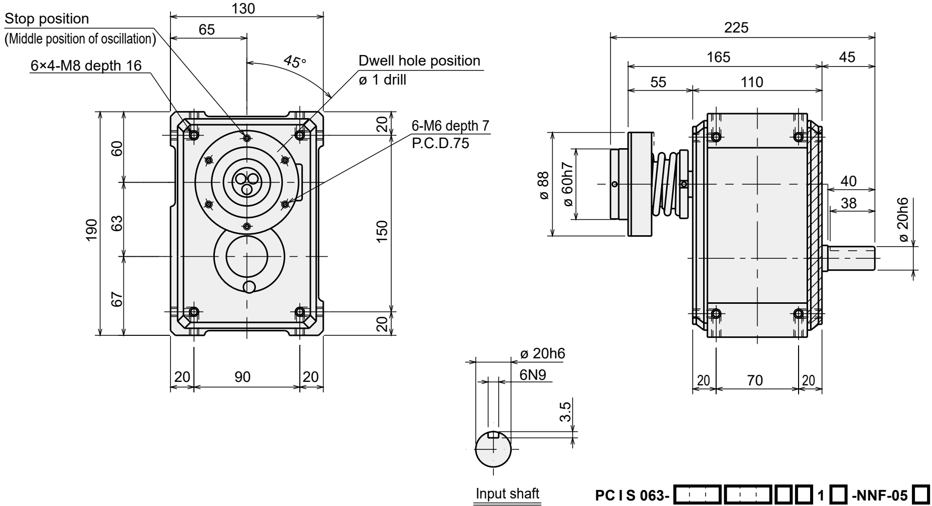

PC I S 063-☐☐☐☐☐☐☐☐1☐-NNF-05☐
PCOS 063

With Torque saver (TSF6)

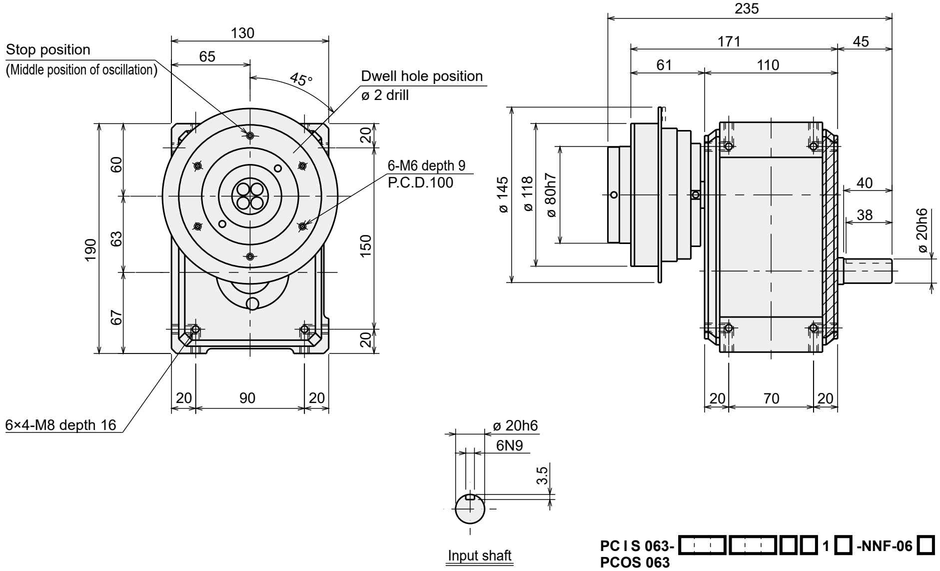

PC I S 063-☐☐☐☐☐☐☐☐1☐-NNF-06☐
PCOS 063

Index	**PC I S 080**
Oscillator	**PCOS 080**

● Standard specifications

Dimensions

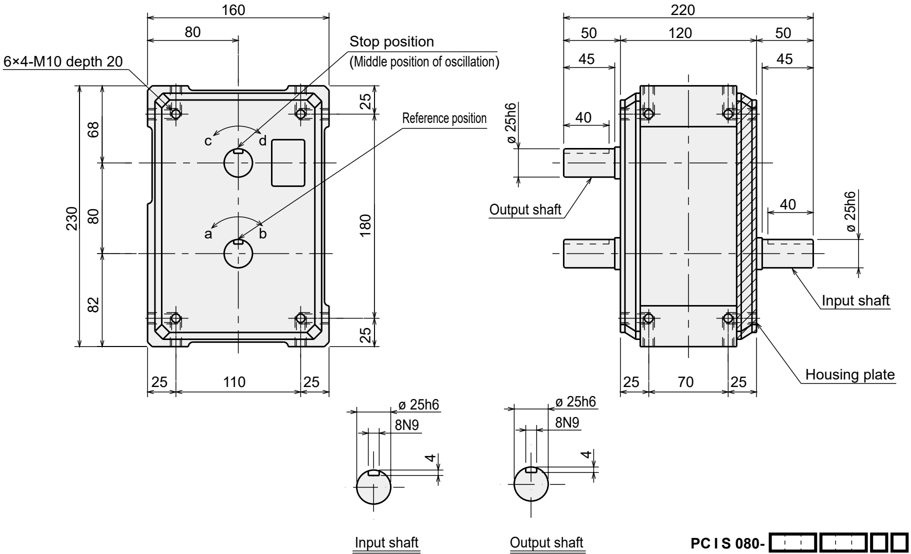

PC I S 080- ☐☐☐☐ **3** ☐
PCOS 080

Installation position and oil supply/drain port and oil level gauge positions

- ● Oil fill/drain port (Rc$^{3}/_{8}$)
- ○ Oil level gauge (ø 30)

Installation position	1	2	3
Series	**PCIS/PCOS**	**PCIS/PCOS**	**PCIS/PCOS**
Dimensions	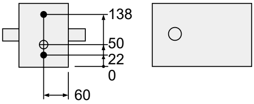	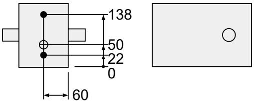	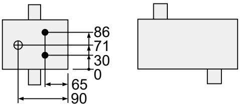

Installation position	4	5	6
Series	**PCIS/PCOS**	**PCIS/PCOS**	**PCIS/PCOS**
Dimensions	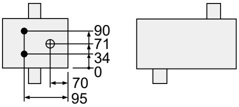	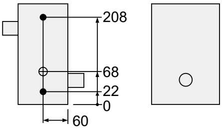	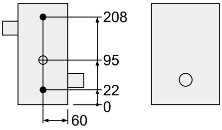

Characteristics

Descriptions	Unit	Characteristics	
		Output shaft	Input shaft
Allowable thrust force	N	3500	2500
Allowable radial force	N	2700	1800
Allowable bending moment	N·m	110	-
Moment of inertia	kg·m^2	2.23×10^{-3}	3.73×10^{-3}

Descriptions	Unit	Characteristics
Internal frictional torque (Tin)	N·m	4.9
Product weight	kg	19
Oil level	ℓ	0.6
Paint color		Silver

Accuracy

Index accuracy (sec.)		
Indexing accuracy	1 dwell	± 60
	2 dwell	± 90
	3 dwell	-
	4 dwell	-
Repeatability		60

Oscillating accuracy (sec.)	
Indexing accuracy	± 90
Repeatability	60

* For the dwell accuracy, please contact CKD.

List of index angles

Index series **PCIS 080** Cam curve/MS

Total index angle (θt) / Index number (n)		90	120	150	180	210	240	270	300	330
1 dwell	1								○	○
	2			○	○	○	○	○	○	○
	3	○	○	○	○	○	○	○	○	○
	4	○	○	○	○	○	○	○	○	○
2 dwell	6		○	○	○	○	○	○	○	○
	8	○	○	○	○	○	○	○	○	○

Cam curve/MC

Total index angle (θt) / Index number (n)		90	120	150	180	210	240	270	300	330
1 dwell	1					○	○	○	○	○
	2		○	○	○	○	○	○	○	○

Oscillating series **PCOS 080** Cam curve/MS

Total index angle (θt) / Oscillating angle (ψ)	60	90	120	180	240	300	360
45			○	○	○	○	○
30		○	○	○	○	○	○
15	○	○	○	○	○	○	○

Dimensions with options

With worm reducer (with HO50-C/B)

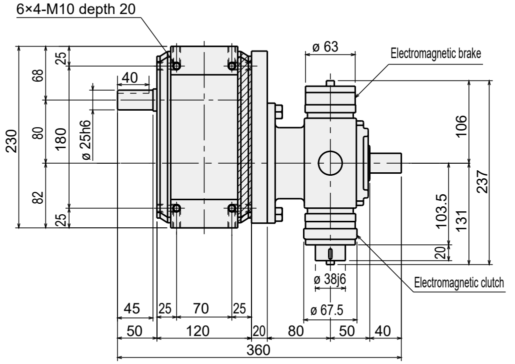

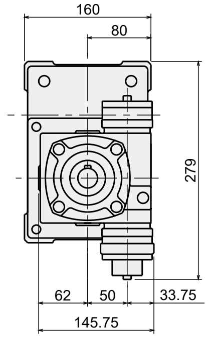

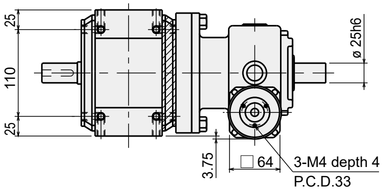

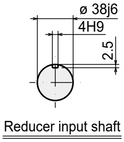

Reducer input shaft

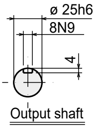

Output shaft

PC I S 080-☐☐☐☐1☐-NVN05☐YG
PCOS 080

With worm reducer (without HO50-C/B)

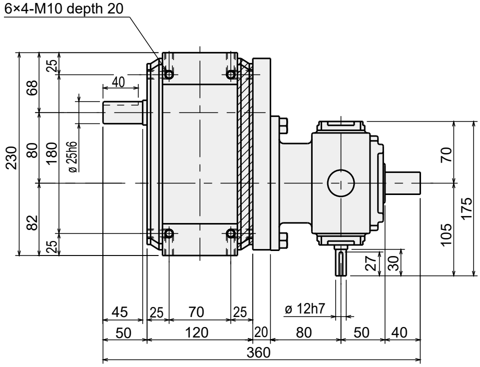

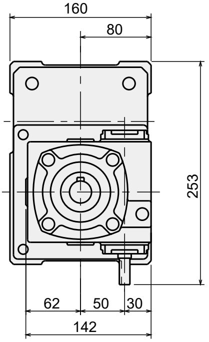

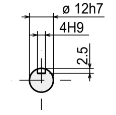

Reducer input shaft

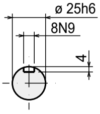

Output shaft

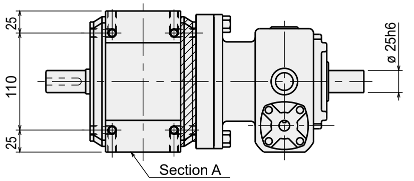

Note: Reducer may protrude from the housing end face (section A).

PC I S 080-☐☐☐☐1☐-NVN05☐NG
PCOS 080

With Torque saver (TSF6)

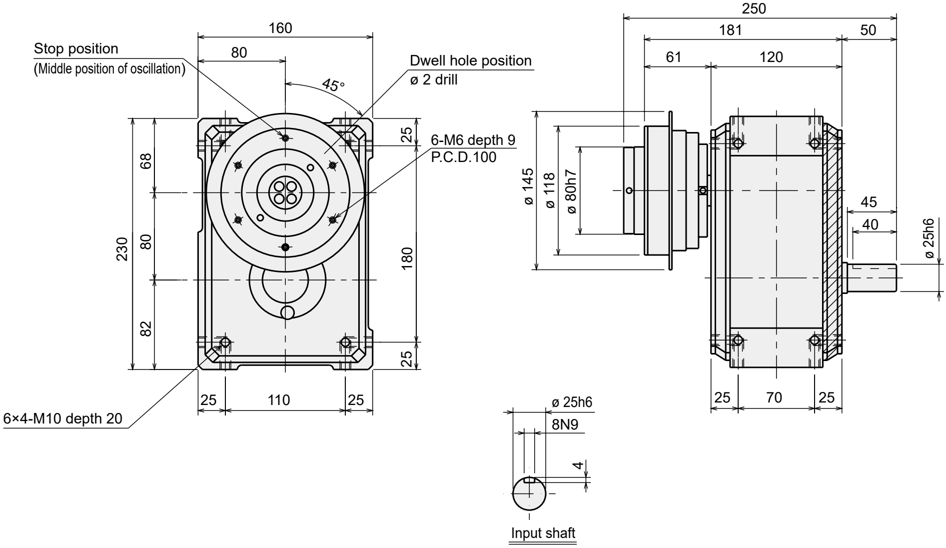

PC I S 080-☐☐☐☐1☐-NNF-06☐
PCOS 080

Index	PC I S 100
Oscillator	PCOS 100

● Standard specifications

Dimensions

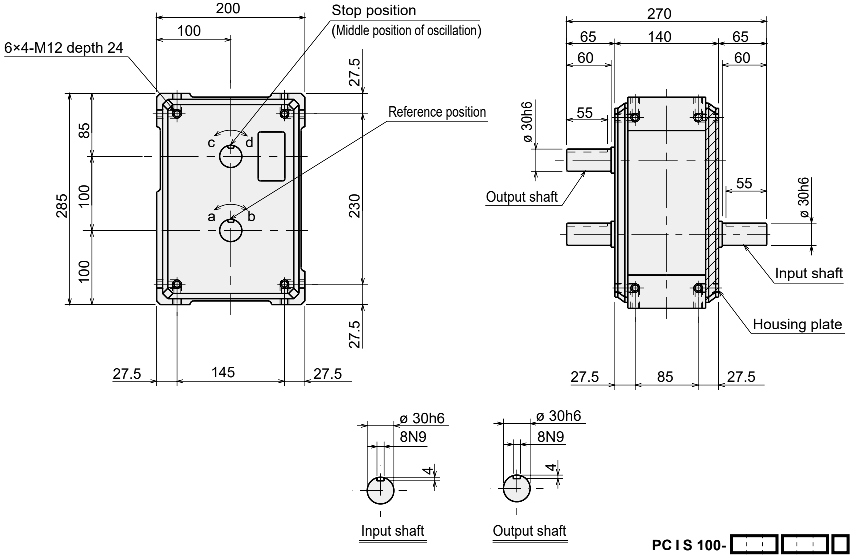

PC I S 100-□□□□3□
PCOS 100

Installation position and oil supply/drain port and oil level gauge positions

- ● Oil fill/drain port (Rc$^3/_8$)
- ○ Oil level gauge (ø 30)

Installation position	1	2	3
Series	**PCIS/PCOS**	**PCIS/PCOS**	**PCIS/PCOS**
Dimensions	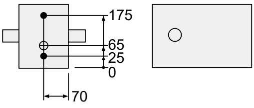 	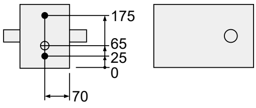 	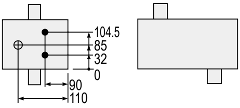

Installation position	4	5	6
Series	**PCIS/PCOS**	**PCIS/PCOS**	**PCIS/PCOS**
Dimensions	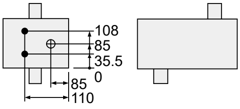 	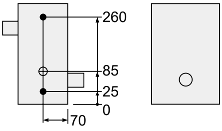 	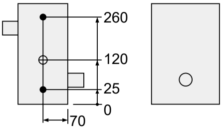

Characteristics

Descriptions	Unit	Characteristics	
		Output shaft	Input shaft
Allowable thrust force	N	5000	3500
Allowable radial force	N	3800	2500
Allowable bending moment	N·m	190	-
Moment of inertia	kg·m^2	7.04×10^{-3}	1.04×10^{-2}

Descriptions	Unit	Characteristics
Internal frictional torque (Tin)	N·m	7.7
Product weight	kg	32
Oil level	ℓ	1.2
Paint color		Silver

Accuracy

Index accuracy (sec.)		
Indexing accuracy	1 dwell	± 60
	2 dwell	± 90
	3 dwell	-
	4 dwell	-
Repeatability		60

Oscillating accuracy (sec.)	
Indexing accuracy	± 90
Repeatability	60

* For the dwell accuracy, please contact CKD.

List of index angles

Index series **PCIS 100** Cam curve/MS

Total index angle (θt) / Index number (n)		90	120	150	180	210	240	270	300	330
1 dwell	1								○	○
	2			○	○	○	○	○	○	○
	3	○	○	○	○	○	○	○	○	○
	4	○	○	○	○	○	○	○	○	○
2 dwell	6		○	○	○	○	○	○	○	○
	8	○	○	○	○	○	○	○	○	○

Cam curve/MC

Total index angle (θt) / Index number (n)		90	120	150	180	210	240	270	300	330
1 dwell	1					○	○	○	○	○
	2		○	○	○	○	○	○	○	○

Oscillating series **PCOS 100** Cam curve/MS

Total index angle (θt) / Oscillating angle (ψ)	60	90	120	180	240	300	360
45			○	○	○	○	○
30		○	○	○	○	○	○
15	○	○	○	○	○	○	○

Index	PC I S 100
Oscillator	PCOS 100

● Dimensions with options

With worm reducer (with HO60-C/B)

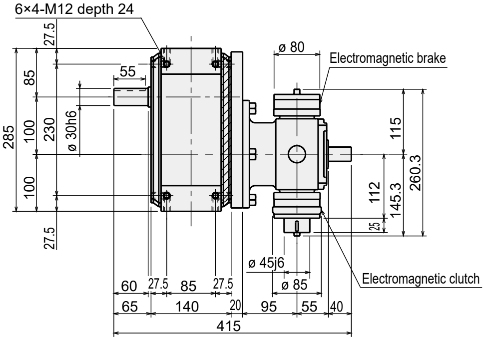

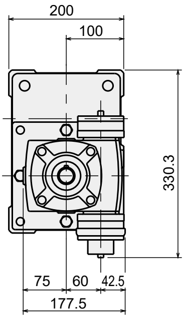

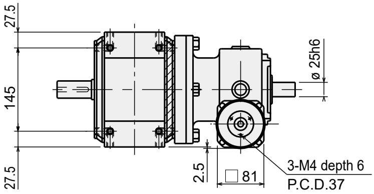

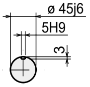

Reducer input shaft

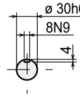

Output shaft

PC I S 100-☐☐☐☐1☐-NVN06☐YG
PCOS 100

With worm reducer (without HO60-C/B)

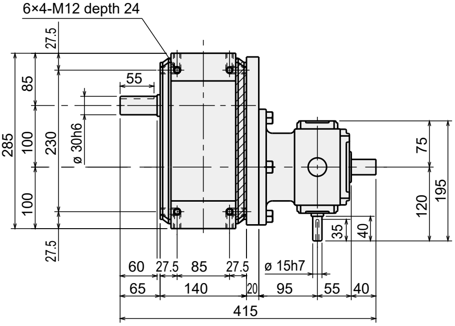

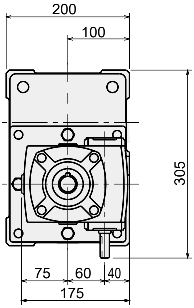

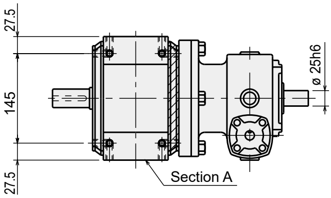

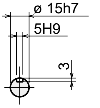

Reducer input shaft

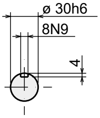

Output shaft

Note: Reducer may protrude from the housing end face (section A).

PC I S 100-☐☐☐☐1☐-NVN06☐NG
PCOS 100

With Torque saver (TSF8)

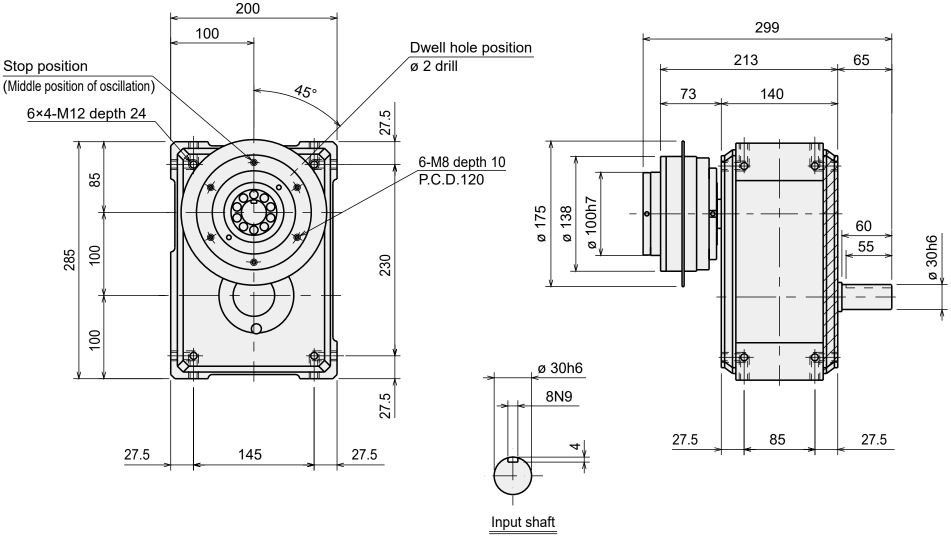

PC I S 100-☐☐☐☐1☐-NNF-08☐
PCOS 100

● Standard specifications

Dimensions

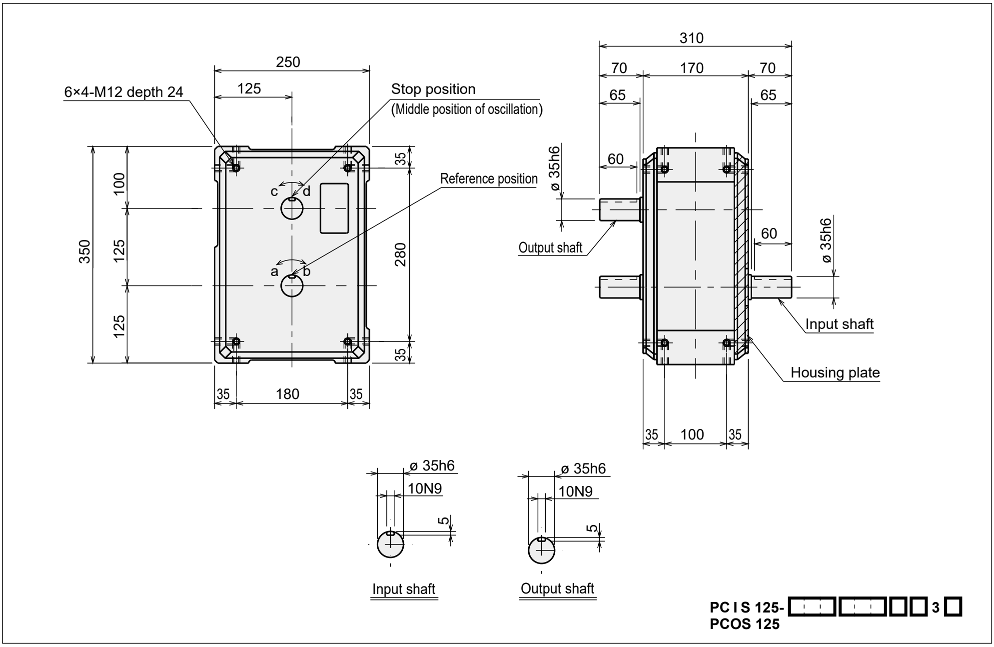

Installation position and oil supply/drain port and oil level gauge positions

- ● Oil fill/drain port (Rc3/8)
- ○ Oil level gauge (ø 30)

Installation position	1	2	3
Series	PCIS/PCOS	PCIS/PCOS	PCIS/PCOS
Dimensions	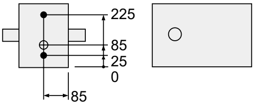	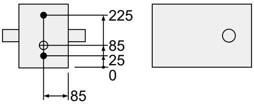	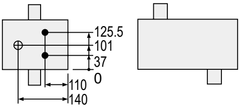

Installation position	4	5	6
Series	PCIS/PCOS	PCIS/PCOS	PCIS/PCOS
Dimensions	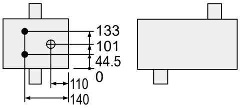	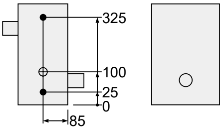	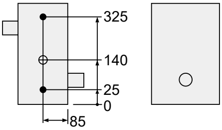

Characteristics

Descriptions	Unit	Characteristics	
		Output shaft	Input shaft
Allowable thrust force	N	5800	4000
Allowable radial force	N	5200	3200
Allowable bending moment	N·m	260	-
Moment of inertia	kg·m^2	1.86 × 10^{-2}	3.06 × 10^{-2}

Descriptions	Unit	Characteristics
Internal frictional torque (Tin)	N·m	12
Product weight	kg	62
Oil level	ℓ	2.5
Paint color		Silver

Accuracy

Index accuracy (sec.)		
Indexing accuracy	1 dwell	± 60
	2 dwell	± 90
	3 dwell	-
	4 dwell	-
Repeatability		60

Oscillating accuracy (sec.)	
Indexing accuracy	± 90
Repeatability	60

* For the dwell accuracy, please contact CKD.

List of index angles

Index series **PCIS 125** Cam curve/MS

Total index angle (θt) / Index number (n)		90	120	150	180	210	240	270	300	330
1 dwell	1								○	○
	2			○	○	○	○	○	○	○
	3	○	○	○	○	○	○	○	○	○
	4	○	○	○	○	○	○	○	○	○
2 dwell	6		○	○	○	○	○	○	○	○
	8	○	○	○	○	○	○	○	○	○

Cam curve/MC

Total index angle (θt) / Index number (n)		90	120	150	180	210	240	270	300	330
1 dwell	1					○	○	○	○	○
	2		○	○	○	○	○	○	○	○

Oscillating series **PCOS 125** Cam curve/MS

Total index angle (θt) / Oscillating angle (ψ)	60	90	120	180	240	300	360
45			○	○	○	○	○
30		○	○	○	○	○	○
15	○	○	○	○	○	○	○

● Dimensions with options

With worm reducer (with HO80-C/B)

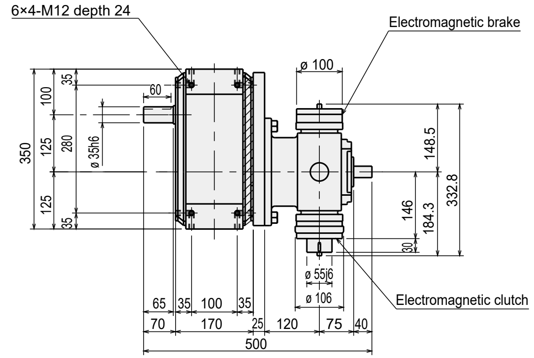

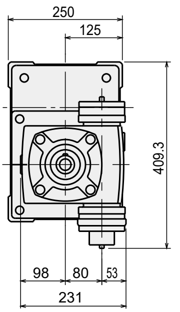

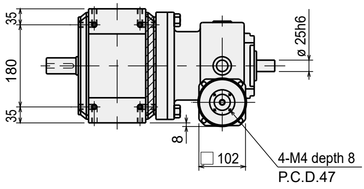

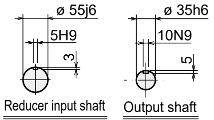

Reducer input shaft
Output shaft

PC I S 125-□□□□□□□□ 1 □ -NVN08 □ YG
PCOS 125

With worm reducer (without HO80-C/B)

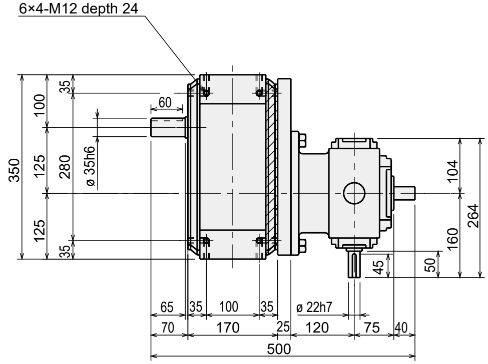

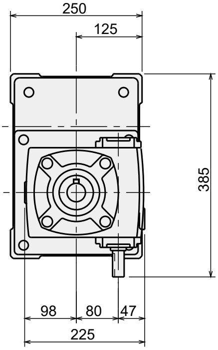

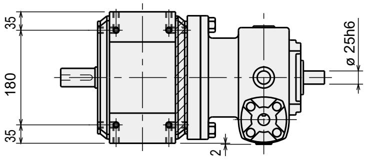

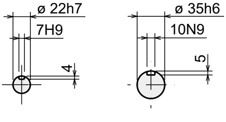

Reducer input shaft
Output shaft

PC I S 125-□□□□□□□□ 1 □ -NVN08 □ NG
PCOS 125

With Torque saver (TSF11)

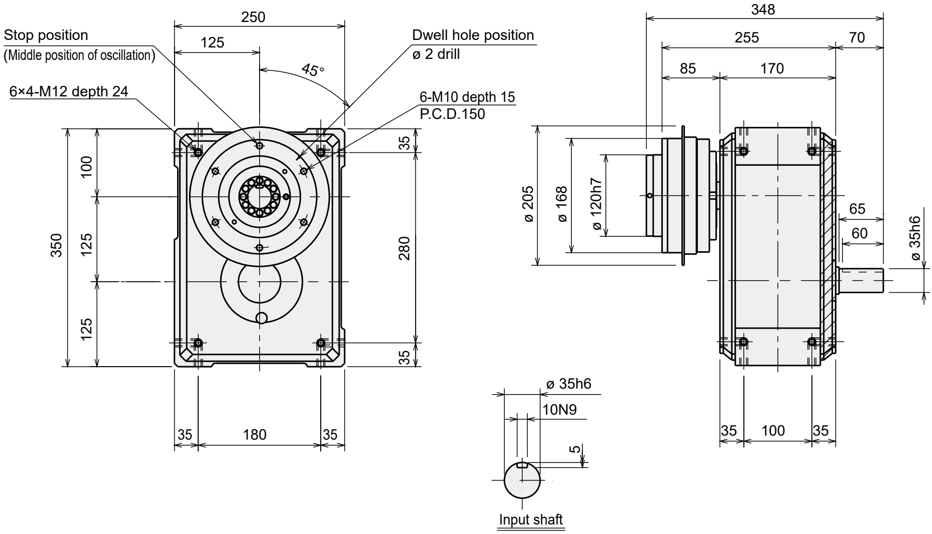

PC I S 125-☐☐☐☐☐☐☐☐1☐-NNF-11☐
PCOS 125

Index	PC I S 160
Oscillator	PCOS 160

● Standard specifications

Dimensions

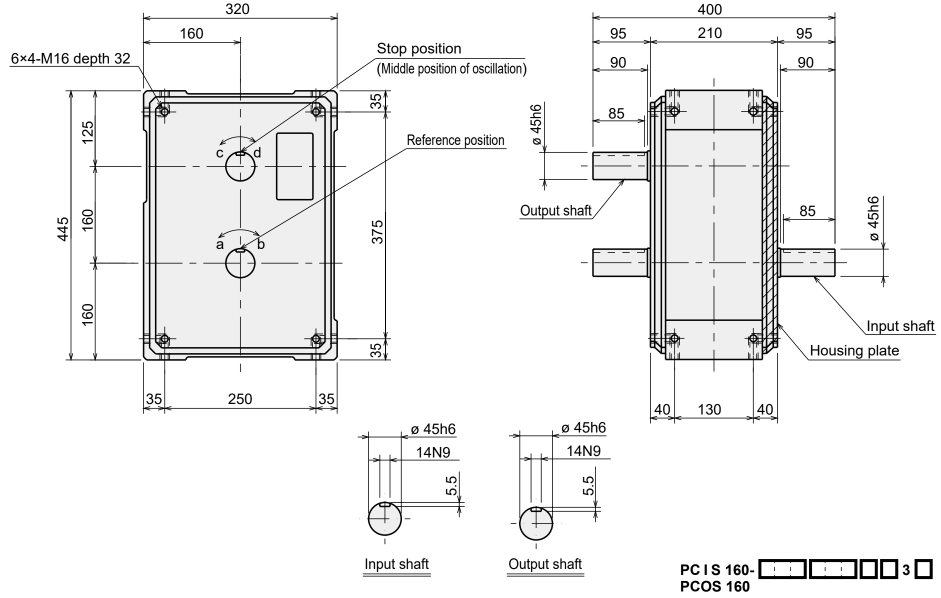

Installation position and oil supply/drain port and oil level gauge positions

- ● Oil fill/drain port (Rc$^{1}/_{2}$)
- ○ Oil level gauge (ø 30)

Installation position	1	2	3
Series	**PCIS/PCOS**	**PCIS/PCOS**	**PCIS/PCOS**
Dimensions	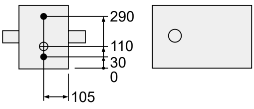	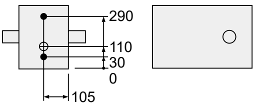	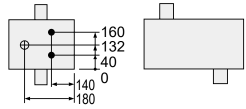

Installation position	4	5	6
Series	**PCIS/PCOS**	**PCIS/PCOS**	**PCIS/PCOS**
Dimensions	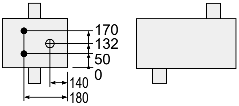	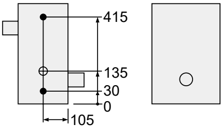	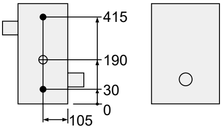

Characteristics

Descriptions	Unit	Characteristics	
		Output shaft	Input shaft
Allowable thrust force	N	8000	6200
Allowable radial force	N	6500	4000
Allowable bending moment	N·m	340	-
Moment of inertia	kg·m^2	0.084	0.11

Descriptions	Unit	Characteristics
Internal frictional torque (Tin)	N·m	20
Product weight	kg	130
Oil level	ℓ	4
Paint color		Silver

Accuracy

Index accuracy (sec.)		
Indexing accuracy	1 dwell	± 60
	2 dwell	± 90
	3 dwell	-
	4 dwell	-
Repeatability		60

Oscillating accuracy (sec.)	
Indexing accuracy	± 90
Repeatability	60

* For the dwell accuracy, please contact CKD.

List of index angles

Index series **PCIS 160** Cam curve/MS

	Total index angle (θt) / Index number (n)	90	120	150	180	210	240	270	300	330
1 dwell	1								○	○
	2			○	○	○	○	○	○	○
	3	○	○	○	○	○	○	○	○	○
	4	○	○	○	○	○	○	○	○	○
2 dwell	6		○	○	○	○	○	○	○	○
	8	○	○	○	○	○	○	○	○	○

Cam curve/MC

	Total index angle (θt) / Index number (n)	90	120	150	180	210	240	270	300	330
1 dwell	1					○	○	○	○	○
	2		○	○	○	○	○	○	○	○

Oscillating series **PCOS 160** Cam curve/MS

Total index angle (θt) / Oscillating angle (ψ)	60	90	120	180	240	300	360
45			○	○	○	○	○
30		○	○	○	○	○	○
15	○	○	○	○	○	○	○

Dimensions with options

With worm reducer (with HO100-C/B)

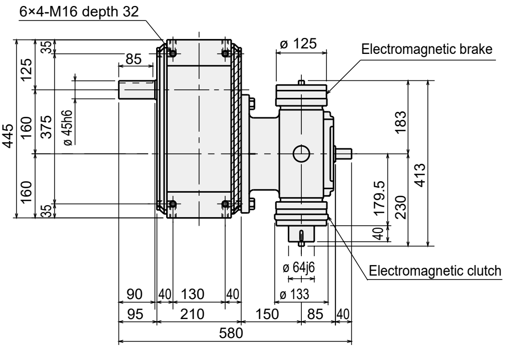

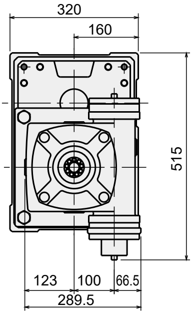

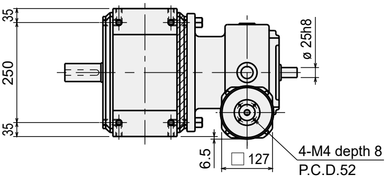

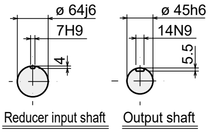

PC I S 160-☐☐☐☐1☐-NVN10☐YG
PCOS 160

With worm reducer (without HO100-C/B)

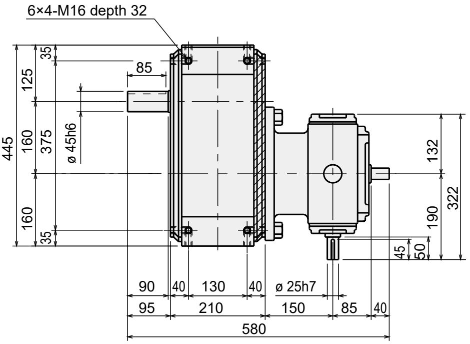

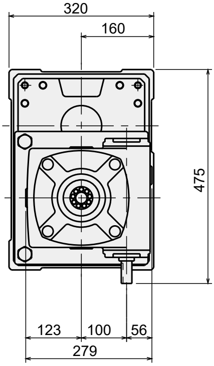

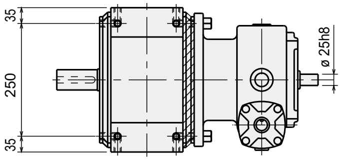

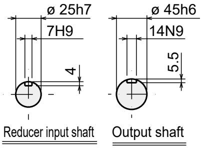

PC I S 160-☐☐☐☐1☐-NVN010☐NG
PCOS 160

With Torque saver (TSF14)

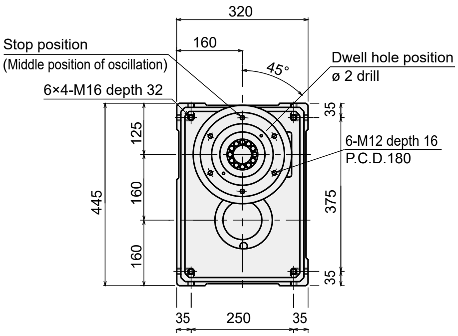

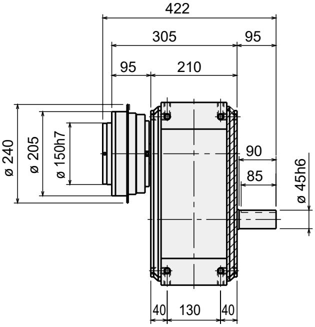

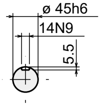

Input shaft

PC I S 160-☐☐☐☐☐☐☐☐1☐-NNF-14☐
PCOS 160

● Standard specifications

Dimensions

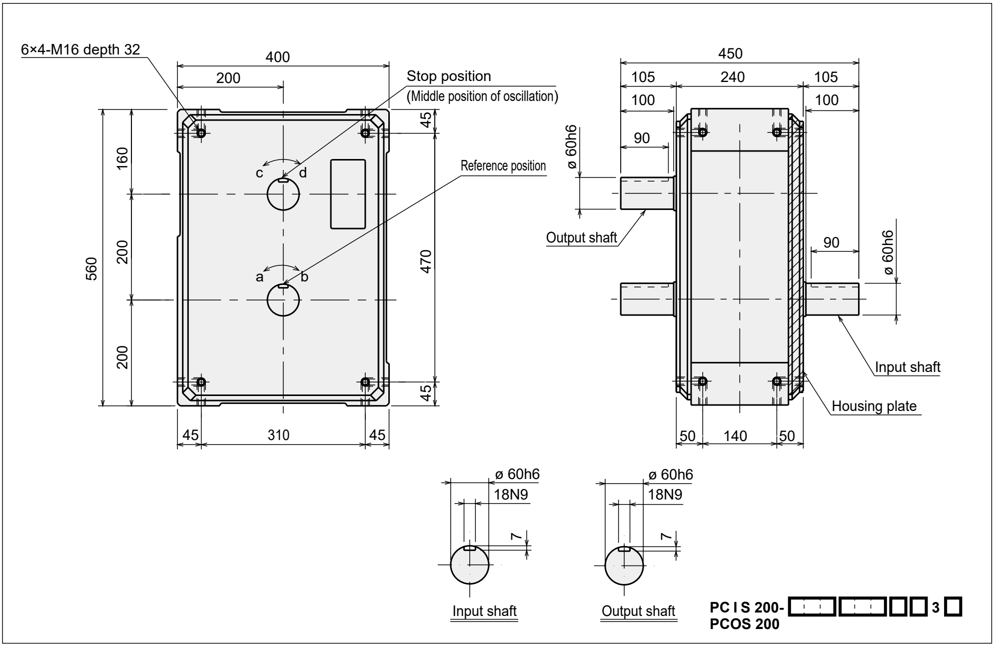

Installation position and oil supply/drain port and oil level gauge positions

- ● Oil fill/drain port (Rc$^1/_2$)
- ○ Oil level gauge (ø 30)

Installation position	1	2	3
Series	**PCIS/PCOS**	**PCIS/PCOS**	**PCIS/PCOS**
Dimensions	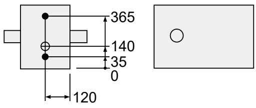	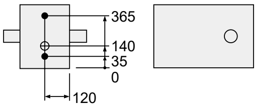	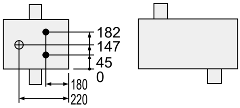

Installation position	4	5	6
Series	**PCIS/PCOS**	**PCIS/PCOS**	**PCIS/PCOS**
Dimensions	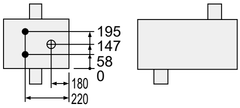	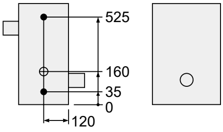	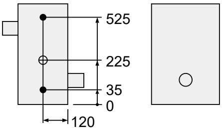

Characteristics

Descriptions	Unit	Characteristics	
		Output shaft	Input shaft
Allowable thrust force	N	14000	10000
Allowable radial force	N	11000	7500
Allowable bending moment	N·m	1200	-
Moment of inertia	kg·m^2	0.19	0.32

Descriptions	Unit	Characteristics
Internal frictional torque (Tin)	N·m	31
Product weight	kg	240
Oil level	ℓ	7
Paint color		Silver

Accuracy

Index accuracy (sec.)		
Indexing accuracy	1 dwell	± 60
	2 dwell	± 90
	3 dwell	-
	4 dwell	-
Repeatability		60

Oscillating accuracy (sec.)	
Indexing accuracy	± 90
Repeatability	60

* For the dwell accuracy, please contact CKD.

List of index angles

Index series **PCIS 200** Cam curve/MS

	Total index angle (θt) / Index number (n)	90	120	150	180	210	240	270	300	330
1 dwell	1								○	○
	2			○	○	○	○	○	○	○
	3	○	○	○	○	○	○	○	○	○
	4	○	○	○	○	○	○	○	○	○
2 dwell	6		○	○	○	○	○	○	○	○
	8	○	○	○	○	○	○	○	○	○

Cam curve/MC

	Total index angle (θt) / Index number (n)	90	120	150	180	210	240	270	300	330
1 dwell	1					○	○	○	○	○
	2		○	○	○	○	○	○	○	○

Oscillating series **PCOS 200** Cam curve/MS

Total index angle (θt) / Oscillating angle (ψ)	60	90	120	180	240	300	360
45			○	○	○	○	○
30		○	○	○	○	○	○
15	○	○	○	○	○	○	○

Dimensions with options

With worm reducer (with HO100-C/B)

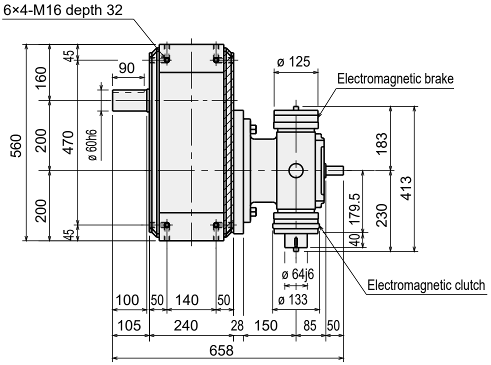

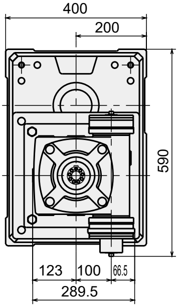

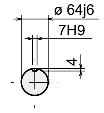

Reducer input shaft

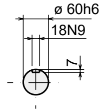

Output shaft

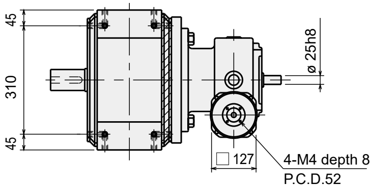

PC I S 200-□□□□1□-NVN10□YG
PCOS 200

With worm reducer (without HO100-C/B)

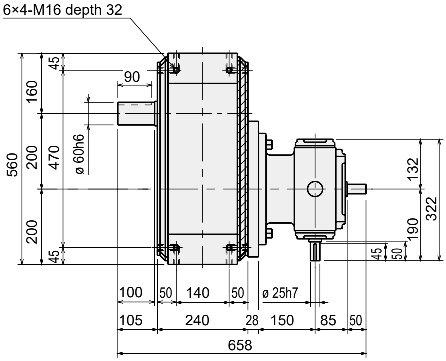

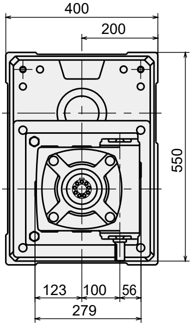

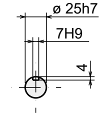

Reducer input shaft

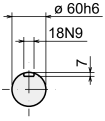

Output shaft

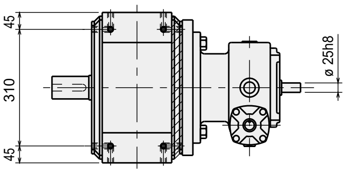

PC I S 200-□□□□1□-NVN10□NG
PCOS 200

With worm reducer (with HO135-C/B)

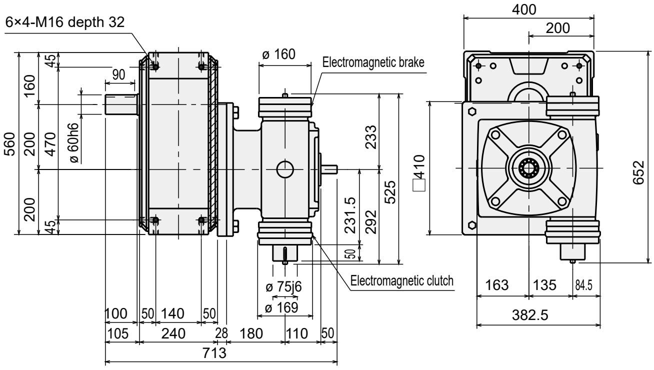

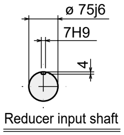

Reducer input shaft

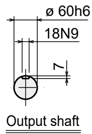

Output shaft

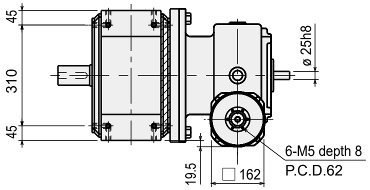

PC I S 200-☐☐☐☐1☐-NVN13☐YG
PCOS 200

With worm reducer (without HO135-C/B)

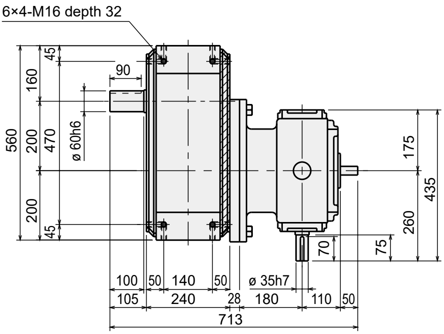

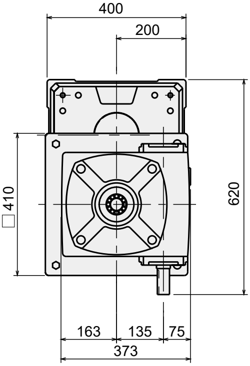

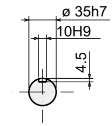

Reducer input shaft

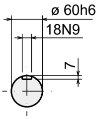

Output shaft

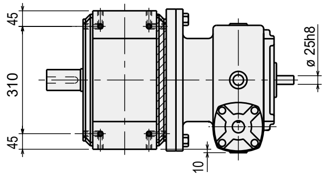

PC I S 200-☐☐☐☐1☐-NVN13☐NG
PCOS 200

● Dimensions with options

With Torque saver (TSF18)

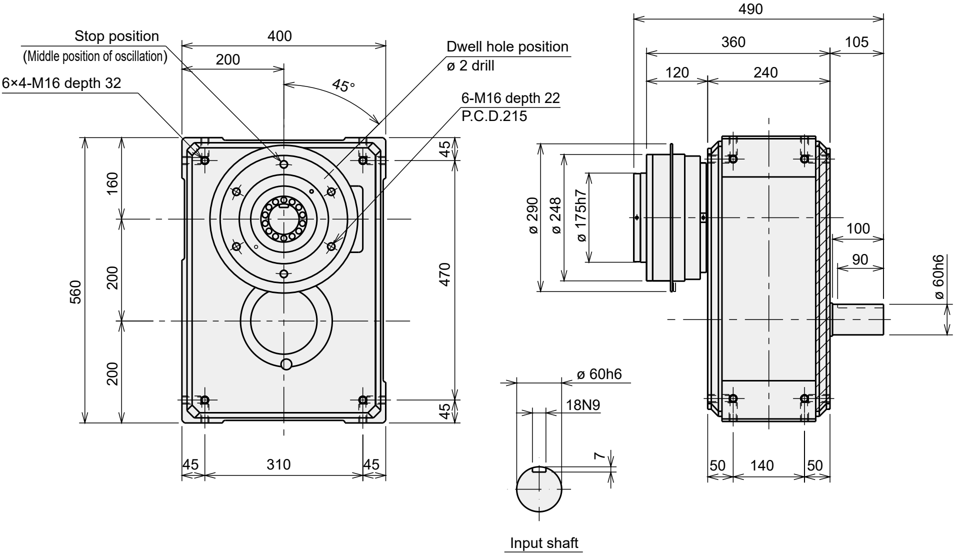

PC I S 200-☐☐☐☐ 1 ☐ -NNF-18 ☐
PCOS 200

● MEMO

Index	**PC I S 250**
Oscillator	**PCOS 250**

● Standard specifications

Dimensions

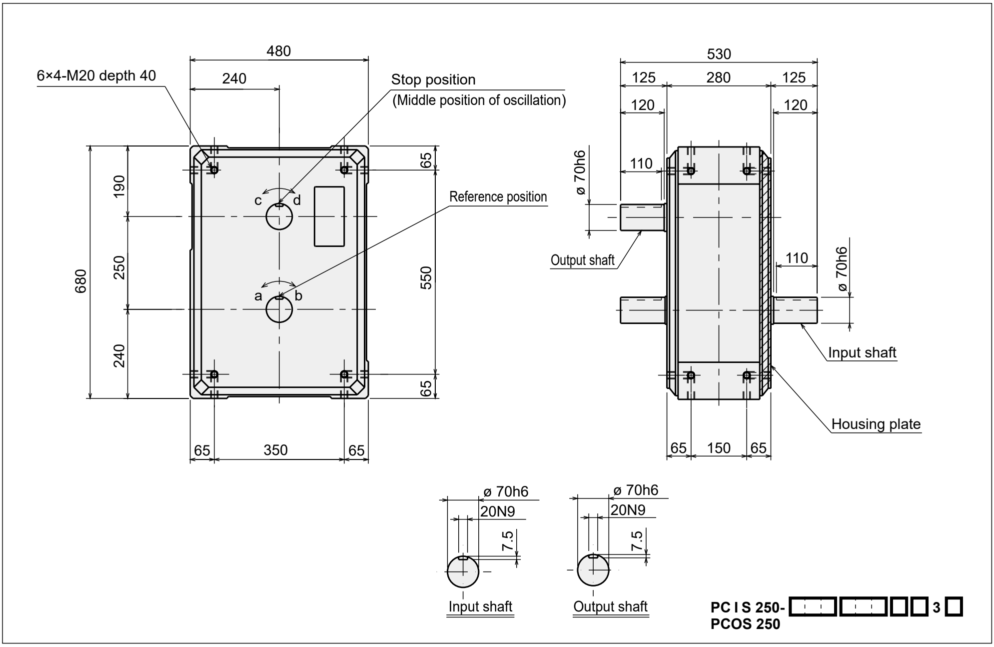

Installation position and oil supply/drain port and oil level gauge positions

● Oil fill/drain port (Rc $^1/_2$)

○ Oil level gauge (ø 30)

Installation position	1	2	3
Series	**PCIS/PCOS**	**PCIS/PCOS**	**PCIS/PCOS**
Dimensions	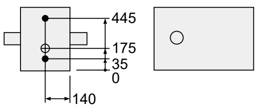	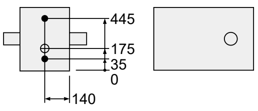	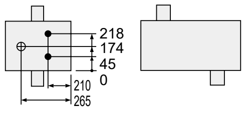

Installation position	4	5	6
Series	**PCIS/PCOS**	**PCIS/PCOS**	**PCIS/PCOS**
Dimensions	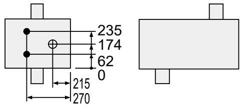	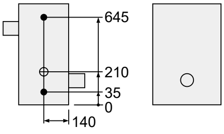	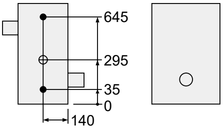

Characteristics

Descriptions	Unit	Characteristics	
		Output shaft	Input shaft
Allowable thrust force	N	18000	15000
Allowable radial force	N	15000	12000
Allowable bending moment	N·m	2100	-
Moment of inertia	kg·m^2	0.51	0.73

Descriptions	Unit	Characteristics
Internal frictional torque (Tin)	N·m	48
Product weight	kg	400
Oil level	ℓ	13
Paint color		Silver

Accuracy

Index accuracy (sec.)		
Indexing accuracy	1 dwell	± 60
	2 dwell	± 90
	3 dwell	-
	4 dwell	-
Repeatability		60

Oscillating accuracy (sec.)	
Indexing accuracy	± 90
Repeatability	60

* For the dwell accuracy, please contact CKD.

List of index angles

Index series **PCIS 250** Cam curve/MS

Total index angle (θt) / Index number (n)		90	120	150	180	210	240	270	300	330
1 dwell	1								○	○
	2			○	○	○	○	○	○	○
	3	○	○	○	○	○	○	○	○	○
	4	○	○	○	○	○	○	○	○	○
2 dwell	6		○	○	○	○	○	○	○	○
	8	○	○	○	○	○	○	○	○	○

Cam curve/MC

Total index angle (θt) / Index number (n)		90	120	150	180	210	240	270	300	330
1 dwell	1					○	○	○	○	○
	2		○	○	○	○	○	○	○	○

Oscillating series **PCOS 250** Cam curve/MS

Total index angle (θt) / Oscillating angle (ψ)	60	90	120	180	240	300	360
45			○	○	○	○	○
30		○	○	○	○	○	○
15	○	○	○	○	○	○	○

● Dimensions with options

With worm reducer (with HO135-C/B)

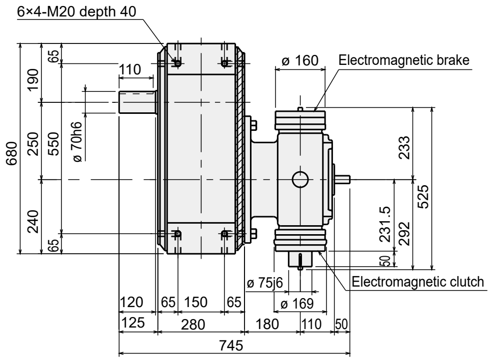

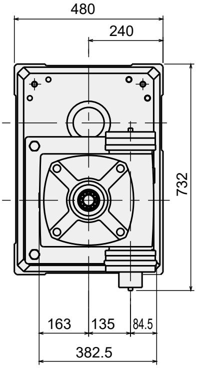

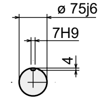

Reducer input shaft

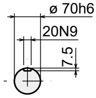

Output shaft

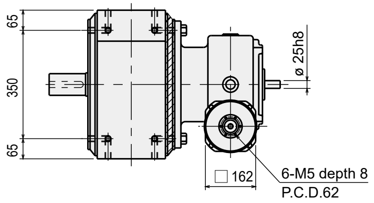

PC I S 250-☐☐☐☐1☐-NVN13☐YG
PCOS 250

With worm reducer (without HO135-C/B)

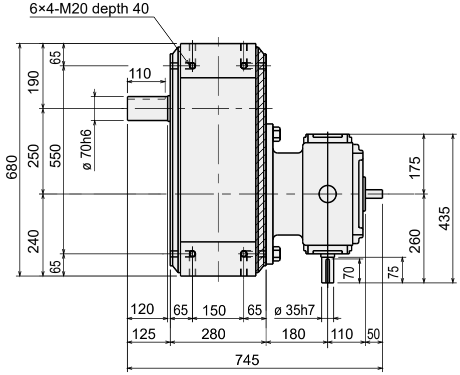

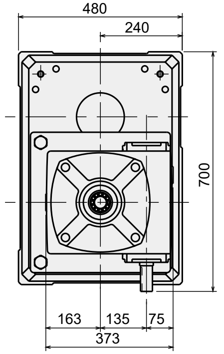

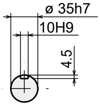

Reducer input shaft

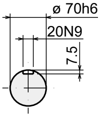

Output shaft

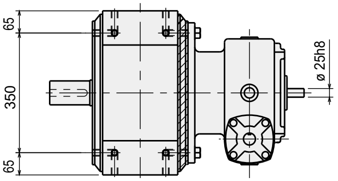

PC I S 250-☐☐☐☐1☐-NVN13☐NG
PCOS 250

With Torque saver (TSF18)

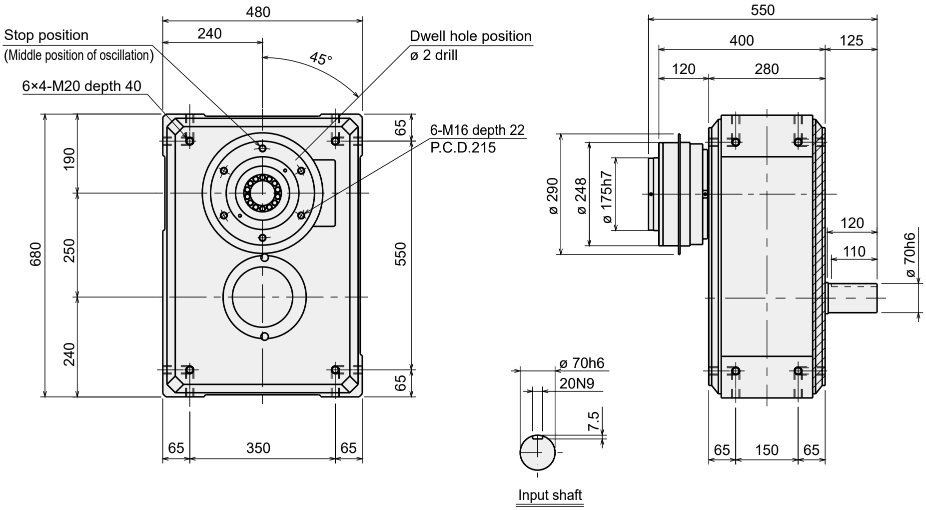

PC I S 250- ☐ ☐ ☐ ☐ **1** ☐ **-NNF-18** ☐
PCOS 250

Parallel cam drive

Output torque table

● How to read a torque table

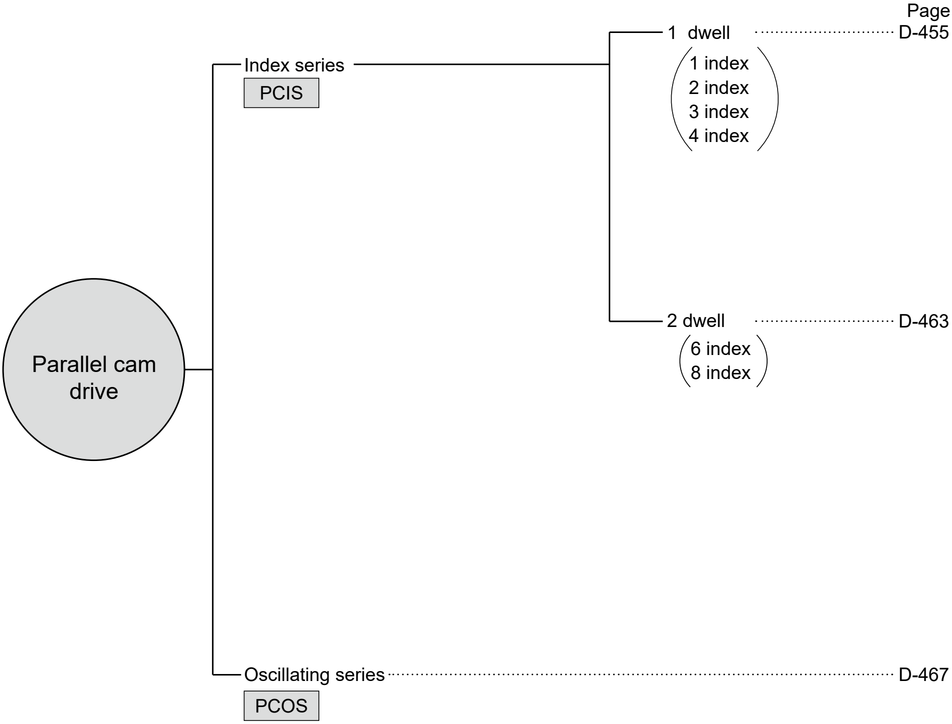

Cautions

1. The output torque data is summarized as in the table on the left.
2. The index angle indicates the total index angle of 1 rotation of the input shaft.
3. The data is based on standard service life of 10,000 hours.

Index series

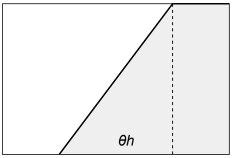

1 dwell

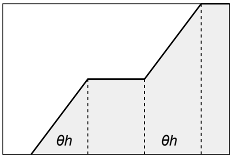

2 dwell

1 dwell .... 1 to 4 index
2 dwell .... 6 or 8 index

Oscillators

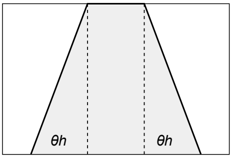

$\theta t = \theta h \times z$
θt : Total index angle
θh : Index angle
z : Dwell No.

How to read the output torque table

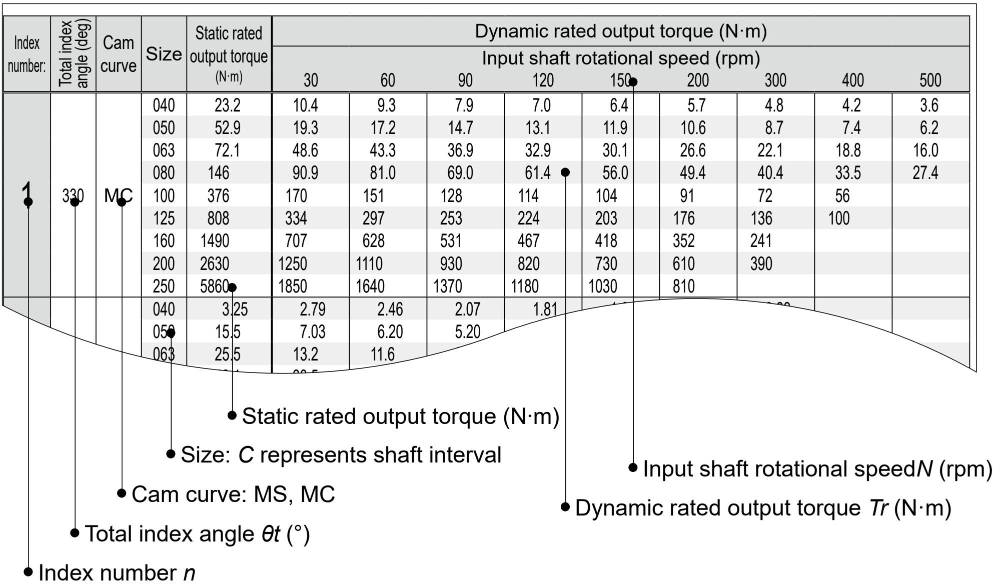

Index number:	Total index angle (deg)	Cam curve	Size	Static rated output torque (N·m)	Dynamic rated output torque (N·m)								
					Input shaft rotational speed (rpm)								
					30	60	90	120	150	200	300	400	500
1	330	MC	040	23.2	10.4	9.3	7.9	7.0	6.4	5.7	4.8	4.2	3.6
			050	52.9	19.3	17.2	14.7	13.1	11.9	10.6	8.7	7.4	6.2
			063	72.1	48.6	43.3	36.9	32.9	30.1	26.6	22.1	18.8	16.0
			080	146	90.9	81.0	69.0	61.4	56.0	49.4	40.4	33.5	27.4
			100	376	170	151	128	114	104	91	72	56	
			125	808	334	297	253	224	203	176	136	100	
			160	1490	707	628	531	467	418	352	241		
			200	2630	1250	1110	930	820	730	610	390		
			250	5860	1850	1640	1370	1180	1030	810			
			040	3.25	2.79	2.46	2.07	1.81					
			050	15.5	7.03	6.20	5.20						
			063	25.5	13.2	11.6							

Output torque table

● PCIS (1 dwell)

Index number	Total index angle (deg)	Cam curve	Size	Static rated output torque (N·m)	Rated dynamic output torque (N·m)								
					Input shaft rotational speed (rpm)								
					30	60	90	120	150	200	300	400	500
1	210	MC	040	4.11	3.62	3.21	2.72	2.41	2.17	1.87	1.40	0.96	
			050	19.7	9.13	8.09	6.85	6.04	5.43	4.62	3.30		
			063	32.3	17.1	15.2	12.8	11.3	10.1	8.6	6.0		
			080	62.2	43.6	38.6	32.6	28.7	25.6	21.6	14.6		
			100	124	79.9	70.5	59.1	51.4	45.1	36.1			
			125	319	150	132	110	94	82	62			
			160	702	334	294	246	212	185	145			
			200	1200	525	461	382	325	277	202			
			250	2230	1100	960	790	670	560	380			
	240	MC	040	4.11	3.66	3.25	2.76	2.45	2.22	1.93	1.49	1.12	
			050	19.7	9.25	8.20	6.96	6.15	5.56	4.79	3.59	2.51	
			063	32.3	17.3	15.4	13.0	11.5	10.4	8.9	6.6	4.4	
			080	62.2	44.1	39.1	33.1	29.2	26.3	22.5	16.3		
			100	124	80.9	71.6	60.3	52.7	46.8	38.7	24.0		
			125	319	152	134	112	98	86	68			
			160	702	338	299	251	219	193	157			
			200	1200	532	469	391	337	293	227			
			250	2230	1110	980	810	690	590	440			
	270	MC	040	14.7	6.69	5.94	5.06	4.51	4.11	3.63	2.97	2.47	2.03
			050	32.6	15.1	13.4	11.4	10.2	9.2	8.1	6.5	5.2	4.0
			063	57.7	24.6	21.8	18.5	16.5	14.9	13.1	10.3	8.0	
			080	117	62.9	55.8	47.5	42.1	38.2	33.2	25.9	19.7	
			100	260	116	103	87	77	69	59	43		
			125	497	238	210	178	157	140	118	81		
			160	1220	517	457	385	337	299	247	153		
			200	1610	804	709	594	515	451	358			
			250	5060	1590	1400	1160	990	850	620			
	300	MS	040	4.11	3.76	3.38	2.88	2.56	2.34	2.07	1.70	1.42	1.18
			050	19.7	9.49	8.53	7.26	6.46	5.89	5.18	4.21	3.45	2.75
			063	32.3	17.8	16.0	13.6	12.1	11.0	9.7	7.8	6.3	5.0
			080	62.2	45.3	40.7	34.6	30.8	28.0	24.6	19.7	15.8	12.1
			100	124	83.1	74.6	63.3	56.1	50.7	43.9	33.5	24.3	
			125	319	156	140	118	105	94	81	59		
			160	702	347	311	264	234	211	182	136		
			200	1200	547	490	414	365	327	277	193		
			250	2230	1140	1020	860	760	680	570			
		MC	040	14.7	6.75	6.00	5.11	4.56	4.16	3.68	3.04	2.57	2.16
			050	32.6	15.3	13.6	11.6	10.3	9.4	8.3	6.7	5.5	4.4
			063	57.7	24.8	22.0	18.7	16.7	15.2	13.3	10.7	8.5	6.5
			080	117	63.5	56.4	48.0	42.6	38.7	33.9	27.0	21.3	
			100	260	117	104	88	78	70	61	46	32	
			125	497	240	213	180	159	143	122	89		
			160	1220	522	462	391	343	307	257	173		
			200	1610	812	717	603	526	465	379	222		
			250	5060	1610	1420	1180	1020	880	680			
	330	MS	040	4.11	3.76	3.41	2.90	2.59	2.36	2.09	1.73	1.47	1.24
			050	19.7	9.49	8.60	7.33	6.53	5.95	5.26	4.31	3.59	2.96
			063	32.3	17.8	16.1	13.7	12.2	11.1	9.8	8.0	6.6	5.4
			080	62.2	45.3	41.1	35.0	31.1	28.3	25.0	20.2	16.6	13.2
			100	124	83.2	75.3	64.0	56.8	51.5	44.8	35.0	26.6	
			125	319	156	141	120	106	96	83	62	44	
			160	702	347	314	267	237	214	186	142	104	
			200	1200	547	495	419	370	333	285	208		
			250	2230	1140	1030	870	770	690	580			

● PCIS (1 dwell)

Index number	Total index angle (deg)	Cam curve	Size	Static rated output torque (N·m)	Rated dynamic output torque (N·m) Input shaft rotational speed (rpm)								
					30	60	90	120	150	200	300	400	500
1	330	MC	040	23.2	10.4	9.3	7.9	7.0	6.4	5.7	4.8	4.2	3.6
			050	52.9	19.3	17.2	14.7	13.1	11.9	10.6	8.7	7.4	6.2
			063	72.1	48.6	43.3	36.9	32.9	30.1	26.6	22.1	18.8	16.0
			080	146	90.9	81.0	69.0	61.4	56.0	49.4	40.4	33.5	27.4
			100	376	170	151	128	114	104	91	72	56	
			125	808	334	297	253	224	203	176	136	100	
			160	1490	707	628	531	467	418	352	241		
			200	2630	1250	1110	930	820	730	610	390		
			250	5860	1850	1640	1370	1180	1030	810			
2	120	MC	040	3.25	2.79	2.46	2.07	1.81	1.61	1.33	0.83		
			050	15.5	7.03	6.20	5.20	4.52	3.98	3.19			
			063	25.5	13.2	11.6	9.7	8.4	7.4	5.8			
			080	49.1	33.5	29.5	24.7	21.3	18.5	14.4			
			100	97.9	61.4	53.7	44.2	37.1	31.0	21.1			
			125	252	115	100	81	67	53	31			
			160	555	256	223	182	151	123	77			
			200	944	403	348	279	223	170				
			250	1760	841	721	568	439	314				
	150	MS	040	3.25	2.89	2.57	2.18	1.93	1.75	1.51	1.15	0.84	
			050	15.5	7.30	6.47	5.48	4.84	4.37	3.74	2.75	1.83	
			063	25.5	13.7	12.1	10.3	9.1	8.2	7.0	5.0		
			080	49.1	34.8	30.9	26.1	23.0	20.6	17.5	12.3		
			100	97.9	63.9	56.4	47.4	41.4	36.5	29.8	17.3		
			125	252	120	106	88	76	66	52			
			160	555	267	235	197	171	150	119			
			200	944	420	369	307	263	226	170			
			250	1760	877	768	635	537	454	322			
		MC	040	11.8	5.18	4.59	3.90	3.46	3.14	2.73	2.12	1.59	
			050	26.1	11.7	10.4	8.8	7.8	7.0	6.0	4.4	3.0	
			063	46.1	19.0	16.8	14.2	12.5	11.3	9.6	6.7		
			080	93.1	48.6	43.0	36.4	32.0	28.6	24.1	16.4		
			100	208	89.6	79.1	66.3	57.6	50.7	40.7			
			125	397	183	162	135	116	101	78			
			160	973	399	350	290	246	209	152			
			200	1290	621	541	443	368	301	193			
			250	4050	1230	1060	850	670	510				
	180	MS	040	11.8	5.35	4.75	4.05	3.61	3.29	2.90	2.38	1.98	1.63
			050	26.1	12.1	10.7	9.1	8.1	7.4	6.5	5.2	4.2	3.2
			063	46.1	19.7	17.5	14.8	13.2	12.0	10.4	8.2	6.4	
			080	93.1	50.3	44.6	37.9	33.7	30.5	26.6	20.7	15.6	
			100	208	92.8	82.2	69.6	61.4	55.3	47.2	34.1		
			125	397	190	168	142	125	112	94	64		
			160	973	413	365	308	269	239	196	120		
			200	1290	643	567	475	411	360	285			
			250	4050	1270	1120	930	790	670	490			
		MC	040	18.7	8.06	7.17	6.10	5.43	4.95	4.37	3.57	2.96	2.41
			050	42.7	15.0	13.3	11.3	10.1	9.1	8.0	6.3	4.9	
			063	58.2	37.8	33.6	28.5	25.4	23.0	20.2	16.1	12.7	
			080	118	70.7	62.7	53.3	47.2	42.7	37.0	28.3	20.7	
			100	303	132	117	99	87	78	66	46		
			125	652	259	229	193	169	151	125	80		
			160	1200	549	483	403	346	299	229			
			200	2120	970	851	706	601	512	374			
			250	4720	1440	1250	1020	830	670				

Parallel cam drive

Output torque table

Index series

● PCIS (1 dwell)

Index number	Total index angle (deg)	Cam curve	Size	Static rated output torque (N·m)	Rated dynamic output torque (N·m)								
					Input shaft rotational speed (rpm)								
					30	60	90	120	150	200	300	400	500
2	210	MS	040	11.8	5.37	4.82	4.11	3.67	3.35	2.97	2.46	2.09	1.78
			050	26.1	12.1	10.9	9.3	8.3	7.5	6.6	5.4	4.5	3.7
			063	46.1	19.7	17.7	15.1	13.4	12.2	10.7	8.7	7.0	5.5
			080	93.1	50.5	45.3	38.5	34.3	31.2	27.3	21.9	17.4	13.3
			100	208	93.1	83.5	70.8	62.7	56.7	49.1	37.4	26.9	
			125	397	191	171	145	128	115	99	73	48	
			160	973	415	371	314	276	247	209	143		
			200	1290	646	577	486	424	376	309	188		
			250	4050	1280	1140	950	820	720	560			
		MC	040	18.7	8.18	7.27	6.19	5.52	5.04	4.46	3.69	3.13	2.65
			050	42.7	15.2	13.5	11.5	10.2	9.3	8.2	6.6	5.4	4.2
			063	58.2	38.3	34.0	29.0	25.8	23.5	20.7	16.8	13.8	11.1
			080	118	71.7	63.7	54.1	48.1	43.7	38.2	30.2	23.6	
			100	303	134	118	100	89	80	69	51	35	
			125	652	263	233	197	174	156	132	93		
			160	1200	557	491	413	359	316	254			
			200	2120	985	868	725	626	545	426			
			250	4720	1460	1280	1050	890	740	510			
	240	MS	040	18.7	8.23	7.48	6.38	5.70	5.21	4.64	3.90	3.39	2.99
			050	42.7	15.3	13.9	11.9	10.6	9.7	8.6	7.1	6.1	5.2
			063	58.2	38.6	35.1	29.9	26.7	24.4	21.6	18.0	15.4	13.3
			080	118	72.2	65.6	55.9	49.8	45.4	40.2	33.0	27.7	23.1
			100	303	135	122	104	92	84	74	59	47	36
			125	652	265	241	204	181	165	143	112	85	
			160	1200	561	508	430	379	341	290	206		
			200	2120	993	898	759	667	596	500	336		
			250	4720	1470	1330	1120	970	850	680			
		MC	040	22.4	9.67	8.64	7.37	6.57	6.01	5.34	4.46	3.85	3.35
			050	51.1	18.0	16.0	13.7	12.2	11.1	9.8	8.1	6.8	5.6
			063	69.9	45.4	40.6	34.6	30.8	28.1	24.9	20.6	17.4	14.6
			080	141	84.8	75.7	64.5	57.4	52.3	46.0	37.3	30.6	24.4
			100	363	158	141	120	106	96	84	65	50	
			125	782	311	277	235	208	188	162	122	86	
			160	1440	658	586	493	431	383	316	196		
			200	2540	1170	1030	870	750	660	530			
			250	5660	1730	1530	1260	1070	910	650			
	270	MS	040	18.7	8.23	7.57	6.45	5.76	5.27	4.70	3.96	3.47	3.09
			050	42.7	15.3	14.1	12.0	10.7	9.8	8.7	7.3	6.3	5.4
			063	58.2	38.6	35.4	30.2	27.0	24.7	21.9	18.4	15.9	13.9
			080	118	72.2	66.3	56.5	50.4	46.0	40.8	33.8	28.8	24.6
			100	303	135	123	105	94	85	75	61	50	40
			125	652	265	243	207	184	167	147	117	93	70
			160	1200	561	514	436	386	348	299	223	152	
			200	2120	993	909	770	679	610	520	372		
			250	4720	1480	1350	1130	990	880	720	440		
		MC	040	22.4	9.67	8.74	7.45	6.65	6.08	5.41	4.54	3.95	3.48
			050	51.1	18.0	16.2	13.8	12.3	11.3	10.0	8.3	7.0	6.0
			063	69.9	45.4	41.0	35.0	31.2	28.5	25.3	21.0	18.0	15.5
			080	141	84.8	76.6	65.2	58.1	53.0	46.8	38.4	32.2	26.6
			100	363	158	142	121	108	98	86	68	54	40
			125	782	311	281	238	211	192	167	129	97	
			160	1440	658	592	500	440	393	331	224		
			200	2540	1170	1050	880	770	680	560	340		
			250	5660	1730	1550	1290	1110	960	730			

PCIS (1 dwell)

Index number	Total index angle (deg)	Cam curve	Size	Static rated output torque (N·m)	Rated dynamic output torque (N·m)								
					Input shaft rotational speed (rpm)								
					30	60	90	120	150	200	300	400	500
2	300	MS	040	22.4	9.67	8.97	7.65	6.84	6.26	5.58	4.72	4.16	3.74
			050	51.1	18.0	16.7	14.2	12.7	11.6	10.3	8.7	7.6	6.7
			063	69.9	45.4	42.1	35.9	32.1	29.4	26.1	22.0	19.2	17.0
			080	141	84.8	78.6	67.1	59.8	54.7	48.6	40.6	35.1	30.6
			100	363	158	146	125	111	101	90	74	62	52
			125	782	311	288	246	219	199	176	143	117	94
			160	1440	659	610	518	458	415	359	274	198	
			200	2540	1170	1080	910	810	730	620	450	290	
			250	5660	1740	1600	1350	1180	1050	870	540		
		MC	040	22.4	9.67	8.82	7.52	6.72	6.15	5.47	4.61	4.03	3.59
			050	51.1	18.0	16.4	14.0	12.5	11.4	10.1	8.4	7.3	6.3
			063	69.9	45.4	41.4	35.3	31.5	28.8	25.6	21.4	18.5	16.1
			080	141	84.8	77.3	65.9	58.7	53.6	47.5	39.3	33.3	28.3
			100	363	158	144	122	109	99	87	70	57	45
			125	782	311	283	241	214	195	170	135	106	
			160	1440	659	599	507	447	402	342	245		
			200	2540	1170	1060	890	780	700	590	390		
			250	5660	1740	1570	1310	1140	1000	790			
	330	MS	040	22.4	9.67	9.05	7.72	6.90	6.32	5.63	4.77	4.22	3.80
			050	51.1	18.0	16.8	14.3	12.8	11.7	10.4	8.8	7.7	6.8
			063	69.9	45.4	42.5	36.3	32.4	29.6	26.4	22.3	19.5	17.4
			080	141	84.8	79.3	67.7	60.4	55.2	49.1	41.2	35.8	31.5
			100	363	158	148	126	112	102	91	75	64	54
			125	782	311	291	248	221	201	178	146	122	101
			160	1440	659	615	523	464	421	367	286	217	
			200	2540	1170	1090	920	820	740	640	480	340	
			250	5660	1740	1620	1370	1200	1070	900	610		
		MC	040	22.4	9.67	8.90	7.59	6.78	6.20	5.53	4.67	4.10	3.67
			050	51.1	18.0	16.5	14.1	12.6	11.5	10.2	8.6	7.4	6.5
			063	69.9	45.4	41.8	35.6	31.8	29.1	25.9	21.7	18.9	16.6
			080	141	84.8	78.0	66.5	59.3	54.2	48.1	40.0	34.3	29.5
			100	363	158	145	124	110	100	88	72	60	49
			125	782	311	286	243	216	197	173	139	112	87
			160	1440	659	604	512	453	409	351	261	177	
			200	2540	1170	1070	900	800	710	610	420		
			250	5660	1740	1590	1330	1160	1030	830	470		
3	90	MS	040	4.11	3.58	3.17	2.69	2.37	2.13	1.81	1.30		
			050	19.7	9.04	8.00	6.76	5.94	5.31	4.45	2.99		
			063	32.3	16.9	15.0	12.6	11.1	9.9	8.2	5.3		
			080	62.2	43.1	38.1	32.1	28.1	25.0	20.6	12.9		
			100	124	79.1	69.6	58.1	50.0	43.4	33.6			
			125	319	148	130	108	92	78	56			
			160	702	330	290	241	206	177	133			
			200	1200	520	454	373	313	261	176			
			250	2230	1090	950	770	640	520	320			
	120	MS	040	14.7	6.64	5.90	5.02	4.47	4.07	3.59	2.91	2.39	1.92
			050	32.6	15.0	13.3	11.3	10.1	9.2	8.0	6.4	5.0	
			063	57.7	24.4	21.6	18.4	16.3	14.8	12.9	10.0	7.5	
			080	117	62.5	55.4	47.1	41.7	37.7	32.7	25.1	18.3	
			100	260	115	102	86	76	68	58	40		
			125	497	236	209	176	155	138	115	75		
			160	1220	514	453	381	332	293	238	136		
			200	1610	798	703	587	505	439	340			
			250	5060	1580	1390	1140	970	820	580			

Parallel cam drive

Output torque table

● PCIS (1 dwell)

Index number	Total index angle (deg)	Cam curve	Size	Static rated output torque (N·m)	Rated dynamic output torque (N·m)								
					Input shaft rotational speed (rpm)								
					30	60	90	120	150	200	300	400	500
3	150	MS	040	23.2	10.4	9.2	7.9	7.0	6.4	5.7	4.8	4.1	3.6
			050	52.9	19.3	17.1	14.6	13.0	11.9	10.5	8.6	7.2	6.0
			063	72.1	48.5	43.1	36.7	32.7	29.9	26.5	21.9	18.5	15.6
			080	146	90.7	80.6	68.6	61.1	55.7	49.0	39.9	32.8	26.3
			100	376	169	150	128	113	103	90	70	54	
			125	808	334	296	251	222	201	174	132	95	
			160	1490	706	624	527	463	413	345	228		
			200	2630	1250	1100	930	810	720	590	360		
			250	5860	1850	1630	1360	1170	1010	770			
	180	MS	040	27.4	12.1	10.9	9.3	8.3	7.6	6.8	5.7	5.0	4.4
			050	62.5	22.5	20.3	17.3	15.4	14.1	12.5	10.4	9.0	7.8
			063	85.5	56.7	51.2	43.6	38.9	35.6	31.6	26.5	22.9	20.0
			080	173	106	96	81	73	66	59	49	41	35
			100	444	197	178	151	135	123	108	88	72	57
			125	957	389	351	298	265	241	211	168	133	100
			160	1770	824	740	627	553	498	425	306		
			200	3110	1460	1310	1100	970	870	730	490		
			250	6920	2160	1940	1620	1410	1230	980			
	210	MS	040	27.4	12.1	11.1	9.4	8.4	7.7	6.9	5.8	5.1	4.6
			050	62.5	22.5	20.6	17.5	15.7	14.3	12.7	10.7	9.3	8.2
			063	85.5	56.7	51.9	44.3	39.5	36.2	32.2	27.1	23.7	21.0
			080	173	106	97	83	74	67	60	50	43	38
			100	444	197	180	154	137	125	111	91	76	64
			125	957	389	356	303	270	246	217	176	145	116
			160	1770	824	752	638	565	511	442	336	241	
			200	3110	1460	1330	1130	990	890	760	550		
			250	6920	2170	1970	1660	1450	1290	1060	650		
	240	MS	040	27.4	12.1	11.2	9.5	8.5	7.8	7.0	5.9	5.2	4.7
			050	62.5	22.5	20.8	17.8	15.9	14.5	12.9	10.9	9.6	8.5
			063	85.5	56.7	52.5	44.8	40.0	36.6	32.6	27.6	24.2	21.6
			080	173	106	98	84	75	68	61	51	45	39
			100	444	197	183	156	139	127	112	93	80	68
			125	957	390	360	307	274	250	221	182	153	127
			160	1770	824	762	647	575	521	455	356	273	
			200	3110	1460	1350	1140	1010	910	790	600	430	
			250	6920	2170	2000	1690	1480	1330	1120	760		
	270	MS	040	27.4	12.1	11.3	9.7	8.6	7.9	7.0	6.0	5.3	4.8
			050	62.5	22.5	21.0	18.0	16.0	14.7	13.1	11.1	9.7	8.7
			063	85.5	56.7	53.1	45.3	40.5	37.1	33.0	28.0	24.7	22.2
			080	173	106	99	85	76	69	62	52	45	41
			100	444	197	185	158	141	128	114	95	82	72
			125	957	390	364	311	277	253	224	186	159	135
			160	1770	824	770	655	582	530	465	371	296	225
			200	3110	1460	1360	1160	1030	930	810	630	480	
			250	6920	2170	2020	1710	1510	1360	1160	840		
	300	MS	040	27.4	12.1	11.4	9.7	8.7	8.0	7.1	6.1	5.4	4.9
			050	62.5	22.5	21.2	18.1	16.2	14.8	13.2	11.2	9.9	8.9
			063	85.5	56.7	53.6	45.8	40.9	37.4	33.4	28.3	25.0	22.6
			080	173	106	100	85	76	70	62	53	46	41
			100	444	197	186	159	142	130	115	97	84	74
			125	957	390	368	314	280	256	227	190	163	142
			160	1770	824	778	662	589	537	473	383	313	249
			200	3110	1460	1380	1170	1040	940	830	660	520	390
			250	6920	2170	2040	1730	1530	1380	1190	900	620	

PCIS (1 dwell)

Index number	Total index angle (deg)	Cam curve	Size	Static rated output torque (N·m)	Rated dynamic output torque (N·m)								
					Input shaft rotational speed (rpm)								
					30	60	90	120	150	200	300	400	500
3	330	MS	040	27.4	12.1	11.4	9.8	8.8	8.0	7.2	6.1	5.4	4.9
			050	62.5	22.5	21.3	18.3	16.3	15.0	13.3	11.3	10.0	9.1
			063	85.5	56.7	53.7	46.1	41.2	37.8	33.7	28.6	25.4	22.9
			080	173	106	100	86	77	70	63	53	47	42
			100	444	197	187	160	143	131	117	98	86	76
			125	957	390	369	317	282	258	230	192	167	146
			160	1770	824	779	668	595	543	479	392	327	268
			200	3110	1460	1380	1180	1050	960	840	680	550	430
			250	6920	2170	2050	1750	1550	1410	1220	940	690	
4	90	MS	040	11.8	5.19	4.60	3.91	3.47	3.15	2.74	2.14	1.62	
			050	26.1	11.7	10.4	8.8	7.8	7.0	6.0	4.5	3.1	
			063	46.1	19.0	16.9	14.3	12.6	11.3	9.6	6.8		
			080	93.1	48.7	43.1	36.5	32.1	28.7	24.3	16.7		
			100	208	89.8	79.3	66.5	57.9	51.0	41.2	22.7		
			125	397	184	162	135	117	102	79			
			160	973	400	351	291	248	211	155			
			200	1290	622	543	445	371	306	200			
			250	4050	1230	1060	850	680	520				
	120	MS	040	18.7	8.16	7.25	6.18	5.51	5.03	4.45	3.67	3.10	2.61
			050	42.7	15.2	13.5	11.5	10.2	9.3	8.2	6.6	5.3	4.1
			063	58.2	38.2	34.0	28.9	25.7	23.4	20.6	16.7	13.6	10.8
			080	118	71.5	63.5	54.0	47.9	43.5	38.0	29.9	23.1	
			100	303	133	118	100	88	80	68	50	34	
			125	652	263	232	197	173	155	131	91		
			160	1200	556	490	411	357	313	250			
			200	2120	982	865	722	622	540	418			
			250	4720	1460	1270	1050	880	730	490			
	150	MS	040	22.4	9.67	8.69	7.41	6.61	6.05	5.38	4.51	3.91	3.43
			050	51.1	18.0	16.1	13.8	12.3	11.2	9.9	8.2	6.9	5.8
			063	69.9	45.4	40.8	34.8	31.0	28.3	25.1	20.8	17.7	15.1
			080	141	84.8	76.2	64.9	57.8	52.7	46.5	37.9	31.5	25.6
			100	363	158	142	120	107	97	85	67	52	
			125	782	311	279	237	210	190	165	126	92	
			160	1440	658	589	497	436	389	324	211		
			200	2540	1170	1040	870	760	670	540	310		
			250	5660	1730	1540	1280	1090	940	700			
	180	MS	040	22.4	9.67	8.84	7.54	6.73	6.16	5.49	4.62	4.05	3.60
			050	51.1	18.0	16.4	14.0	12.5	11.4	10.1	8.5	7.3	6.3
			063	69.9	45.4	41.5	35.4	31.6	28.9	25.7	21.5	18.6	16.2
			080	141	84.8	77.5	66.0	58.9	53.8	47.6	39.5	33.6	28.6
			100	363	158	144	123	109	99	87	71	58	46
			125	782	311	284	242	215	195	171	136	107	80
			160	1440	659	600	508	448	403	344	249		
			200	2540	1170	1060	900	790	700	590	400		
			250	5660	1740	1570	1320	1140	1000	800			
	210	MS	040	22.4	9.67	8.96	7.65	6.83	6.25	5.57	4.72	4.15	3.73
			050	51.1	18.0	16.6	14.2	12.7	11.6	10.3	8.7	7.5	6.7
			063	69.9	45.4	42.1	35.9	32.1	29.3	26.1	22.0	19.2	17.0
			080	141	84.8	78.6	67.0	59.8	54.6	48.5	40.6	35.0	30.4
			100	363	158	146	124	111	101	89	74	62	51
			125	782	311	288	245	218	199	175	142	117	93
			160	1440	659	609	517	458	414	358	273	196	
			200	2540	1170	1080	910	810	730	620	450		
			250	5660	1740	1600	1350	1180	1050	860	540		

Parallel cam drive

Output torque table

Index series

● PCIS (1 dwell)

Index number	Total index angle (deg)	Cam curve	Size	Static rated output torque (N·m)	Rated dynamic output torque (N·m)								
					Input shaft rotational speed (rpm)								
					30	60	90	120	150	200	300	400	500
4	240	MS	040	22.4	9.67	9.07	7.74	6.91	6.33	5.65	4.79	4.23	3.82
			050	51.1	18.0	16.8	14.4	12.8	11.7	10.5	8.8	7.7	6.9
			063	69.9	45.4	42.6	36.3	32.5	29.7	26.5	22.4	19.6	17.6
			080	141	84.8	79.5	67.8	60.6	55.4	49.3	41.4	36.0	31.8
			100	363	158	148	126	112	103	91	76	65	55
			125	782	311	292	249	222	202	179	147	123	103
			160	1440	659	617	524	466	422	369	289	222	
			200	2540	1170	1090	930	820	740	640	490	350	
			250	5660	1740	1620	1370	1210	1080	910	620		
	270	MS	040	22.4	9.67	9.15	7.82	6.99	6.40	5.71	4.85	4.30	3.89
			050	51.1	18.0	17.0	14.5	13.0	11.9	10.6	9.0	7.9	7.1
			063	69.9	45.4	43.0	36.7	32.8	30.1	26.8	22.7	20.0	18.0
			080	141	84.8	80.3	68.6	61.2	56.0	49.9	42.1	36.9	32.8
			100	363	158	149	127	114	104	92	77	67	58
			125	782	311	295	251	224	205	181	150	128	109
			160	1440	659	623	531	472	429	377	301	241	183
			200	2540	1170	1100	940	830	760	660	510	390	
			250	5660	1740	1640	1390	1230	1110	940	680	440	
	300	MS	040	22.4	9.67	9.15	7.90	7.06	6.47	5.77	4.91	4.36	3.95
			050	51.1	18.0	17.0	14.7	13.1	12.0	10.7	9.1	8.0	7.2
			063	69.9	45.4	43.0	37.1	33.1	30.4	27.1	23.0	20.3	18.3
			080	141	84.8	80.3	69.3	61.8	56.6	50.5	42.6	37.5	33.6
			100	363	158	149	129	115	105	93	78	68	60
			125	782	311	295	254	227	207	184	153	132	114
			160	1440	659	623	536	477	435	383	311	254	203
			200	2540	1170	1100	950	840	770	670	530	420	310
			250	5660	1740	1640	1410	1250	1130	970	730	510	
	330	MS	040	22.4	9.67	9.15	7.97	7.12	6.52	5.83	4.96	4.40	4.01
			050	51.1	18.0	17.0	14.8	13.2	12.1	10.8	9.2	8.1	7.3
			063	69.9	45.4	43.0	37.4	33.4	30.6	27.3	23.2	20.6	18.6
			080	141	84.8	80.3	69.9	62.4	57.1	50.9	43.1	38.1	34.2
			100	363	158	149	130	116	106	94	80	69	62
			125	782	311	295	256	229	209	186	156	135	118
			160	1440	659	623	542	482	440	388	318	265	218
			200	2540	1170	1100	960	850	780	680	550	450	350
			250	5660	1740	1640	1420	1260	1140	990	770	570	

Output torque table

● PCIS (2 dwell)

Index number	Total index angle (deg)	Cam curve	Size	Static rated output torque (N·m)	Rated dynamic output torque (N·m)								
					Input shaft rotational speed (rpm)								
					15	30	45	60	75	100	150	200	250
6	120	MS	040	4.11	3.76	3.37	2.87	2.56	2.33	2.06	1.69	1.41	1.16
			050	19.7	9.49	8.51	7.25	6.45	5.87	5.17	4.18	3.41	2.71
			063	32.3	17.8	16.0	13.6	12.1	11.0	9.7	7.8	6.3	4.9
			080	62.2	45.3	40.6	34.6	30.7	27.9	24.5	19.6	15.6	11.8
			100	124	83.1	74.4	63.2	55.9	50.6	43.7	33.2	23.8	
			125	319	156	140	118	104	94	80	58		
			160	702	347	311	264	233	210	181	134		
			200	1200	547	489	413	364	326	275	190		
			250	2230	1140	1020	860	760	670	560	360		
	150	MS	040	14.7	6.79	6.22	5.30	4.73	4.33	3.85	3.24	2.83	2.51
			050	32.6	15.4	14.1	12.0	10.7	9.8	8.7	7.3	6.3	5.5
			063	57.7	24.9	22.8	19.5	17.4	15.9	14.1	11.7	10.0	8.6
			080	117	63.9	58.5	49.8	44.4	40.6	35.9	29.8	25.3	21.5
			100	260	118	108	92	82	74	66	53	43	34
			125	497	242	221	188	167	152	133	106	85	64
			160	1220	526	481	408	362	328	286	223	168	
			200	1610	817	746	633	560	505	435	324	223	
			250	5060	1620	1480	1250	1100	990	830	570		
	180	MS	040	23.2	10.4	9.7	8.2	7.4	6.7	6.0	5.1	4.5	4.1
			050	52.9	19.3	18.0	15.3	13.7	12.5	11.2	9.4	8.3	7.4
			063	72.1	48.6	45.2	38.6	34.5	31.6	28.1	23.7	20.9	18.7
			080	146	90.9	84.6	72.2	64.4	58.9	52.4	44.1	38.4	33.9
			100	376	170	158	135	120	110	97	81	69	59
			125	808	334	311	265	236	216	191	157	132	111
			160	1490	708	658	560	497	452	396	315	248	185
			200	2630	1250	1160	990	880	800	690	540	410	
			250	5860	1860	1720	1460	1290	1160	990	720	470	
	210	MS	040	23.2	10.4	9.8	8.4	7.5	6.8	6.1	5.2	4.6	4.2
			050	52.9	19.3	18.2	15.6	13.9	12.7	11.3	9.6	8.5	7.6
			063	72.1	48.6	45.9	39.1	35.0	32.0	28.6	24.2	21.4	19.2
			080	146	90.9	85.8	73.2	65.4	59.9	53.3	45.0	39.5	35.3
			100	376	170	160	137	122	111	99	83	72	63
			125	808	334	315	269	240	219	194	162	139	119
			160	1490	708	667	568	506	461	406	329	270	216
			200	2630	1250	1180	1000	890	810	710	570	460	350
			250	5860	1860	1750	1490	1320	1190	1030	790	570	
	240	MS	040	27.4	12.1	11.4	9.9	8.8	8.1	7.2	6.1	5.4	5.0
			050	62.5	22.5	21.3	18.3	16.4	15.0	13.4	11.4	10.1	9.1
			063	85.5	56.7	53.7	46.3	41.3	37.9	33.8	28.7	25.4	23.0
			080	173	106	100	86	77	71	63	53	47	42
			100	444	197	187	161	144	131	117	99	86	77
			125	957	390	369	317	283	259	230	193	168	148
			160	1770	824	780	670	597	545	481	395	330	273
			200	3110	1460	1380	1180	1050	960	840	680	560	440
			250	6920	2170	2050	1760	1560	1410	1230	950	710	
	270	MS	040	27.4	12.1	11.4	10.0	8.9	8.2	7.3	6.2	5.5	5.0
			050	62.5	22.5	21.3	18.5	16.6	15.2	13.5	11.5	10.2	9.3
			063	85.5	56.7	53.7	46.8	41.8	38.3	34.2	29.1	25.8	23.4
			080	173	106	100	87	78	71	64	54	48	43
			100	444	197	187	163	145	133	118	100	88	79
			125	957	390	369	321	286	262	233	197	172	153
			160	1770	824	780	678	604	552	489	405	344	292
			200	3110	1460	1380	1200	1070	970	860	700	590	480
			250	6920	2170	2050	1780	1580	1430	1260	1000	780	570

PCIS (2 dwell)

Index number	Total index angle (deg)	Cam curve	Size	Static rated output torque (N·m)	Rated dynamic output torque (N·m) Input shaft rotational speed (rpm)								
					15	30	45	60	75	100	150	200	250
6	300	MS	040	27.4	12.1	11.4	10.1	9.0	8.2	7.4	6.3	5.6	5.1
			050	62.5	22.5	21.3	18.7	16.7	15.3	13.7	11.6	10.3	9.4
			063	85.5	56.7	53.7	47.2	42.2	38.7	34.5	29.4	26.1	23.8
			080	173	106	100	88	79	72	64	55	49	44
			100	444	197	187	164	147	134	120	101	89	80
			125	957	390	369	324	289	265	236	199	175	156
			160	1770	824	780	685	611	558	495	413	354	306
			200	3110	1460	1380	1210	1080	990	870	720	610	510
			250	6920	2170	2050	1800	1600	1450	1280	1030	830	650
	330	MS	040	27.4	12.1	11.4	10.1	9.1	8.3	7.4	6.3	5.6	5.1
			050	62.5	22.5	21.3	18.8	16.9	15.4	13.8	11.7	10.4	9.5
			063	85.5	56.7	53.7	47.6	42.6	39.0	34.8	29.7	26.4	24.1
			080	173	106	100	89	79	73	65	55	49	45
			100	444	197	187	165	148	136	121	103	91	82
			125	957	390	369	326	292	267	238	202	178	160
			160	1770	824	780	690	617	564	501	419	363	317
			200	3110	1460	1380	1220	1090	1000	880	730	630	540
			250	6920	2170	2050	1810	1610	1470	1300	1060	870	700
8	90	MS	040	3.25	2.94	2.61	2.22	1.97	1.79	1.57	1.24	0.98	
			050	15.5	7.42	6.59	5.59	4.96	4.50	3.91	3.03	2.27	
			063	25.5	13.9	12.4	10.5	9.3	8.4	7.3	5.6	4.1	
			080	49.1	35.4	31.4	26.7	23.6	21.3	18.4	13.9	9.8	
			100	97.9	65.0	57.5	48.6	42.7	38.2	32.1	21.8		
			125	252	122	108	91	79	70	58	35		
			160	555	271	240	202	177	158	131	83		
			200	944	428	377	316	275	241	193			
			250	1760	893	786	656	566	492	381			
	120	MS	040	11.8	5.37	4.88	4.16	3.71	3.40	3.01	2.52	2.17	1.88
			050	26.1	12.1	11.0	9.4	8.4	7.6	6.8	5.6	4.7	4.0
			063	46.1	19.7	17.9	15.3	13.6	12.4	10.9	9.0	7.5	6.1
			080	93.1	50.5	45.9	39.1	34.8	31.7	27.9	22.7	18.7	15.0
			100	208	93.1	84.5	71.9	63.8	57.9	50.5	39.6	30.4	
			125	397	191	173	147	130	118	102	78	57	
			160	973	415	376	319	282	254	217	159		
			200	1290	647	585	494	434	389	327	221		
			250	4050	1280	1160	970	850	750	610	340		
	150	MS	040	18.7	8.23	7.64	6.52	5.82	5.33	4.75	4.01	3.53	3.16
			050	42.7	15.3	14.2	12.1	10.8	9.9	8.8	7.4	6.4	5.6
			063	58.2	38.6	35.8	30.5	27.2	24.9	22.2	18.6	16.2	14.4
			080	118	72.2	67.0	57.1	50.9	46.5	41.3	34.5	29.7	25.7
			100	303	135	125	106	95	86	76	63	52	43
			125	652	265	246	209	186	169	149	121	98	78
			160	1200	561	520	441	391	354	307	235	173	
			200	2120	993	919	779	689	622	535	399	273	
			250	4720	1480	1360	1150	1010	900	750	500		
	180	MS	040	22.4	9.67	9.12	7.78	6.95	6.37	5.68	4.82	4.27	3.86
			050	51.1	18.0	16.9	14.4	12.9	11.8	10.5	8.9	7.8	7.0
			063	69.9	45.4	42.8	36.5	32.6	29.9	26.6	22.5	19.8	17.8
			080	141	84.8	80.0	68.2	60.9	55.7	49.6	41.7	36.5	32.3
			100	363	158	149	127	113	103	92	76	66	57
			125	782	311	293	250	223	203	180	149	126	106
			160	1440	659	620	528	469	426	373	295	232	170
			200	2540	1170	1100	930	830	750	650	500	370	
			250	5660	1740	1630	1380	1220	1090	930	660		

Output torque table

● PCIS (2 dwell)

Index number	Total index angle (deg)	Cam curve	Size	Static rated output torque (N·m)	Rated dynamic output torque (N·m)								
					Input shaft rotational speed (rpm)								
					15	30	45	60	75	100	150	200	250
8	210	MS	040	22.4	9.67	9.15	7.89	7.05	6.46	5.77	4.90	4.35	3.95
			050	51.1	18.0	17.0	14.7	13.1	12.0	10.7	9.1	8.0	7.2
			063	69.9	45.4	43.0	37.1	33.1	30.3	27.0	22.9	20.3	18.3
			080	141	84.8	80.3	69.2	61.8	56.6	50.4	42.6	37.4	33.5
			100	363	158	149	129	115	105	93	78	68	60
			125	782	311	295	254	226	207	184	153	132	114
			160	1440	659	623	536	477	434	382	310	253	201
			200	2540	1170	1100	950	840	770	670	530	420	310
			250	5660	1740	1640	1410	1240	1120	970	730	510	
	240	MS	040	22.4	9.67	9.15	7.99	7.14	6.54	5.84	4.97	4.42	4.02
			050	51.1	18.0	17.0	14.8	13.3	12.1	10.8	9.2	8.1	7.4
			063	69.9	45.4	43.0	37.5	33.5	30.7	27.4	23.3	20.6	18.7
			080	141	84.8	80.3	70.0	62.6	57.3	51.1	43.3	38.2	34.4
			100	363	158	149	130	116	106	95	80	70	62
			125	782	311	295	257	229	210	186	156	136	119
			160	1440	659	623	543	484	441	390	320	268	222
			200	2540	1170	1100	960	850	780	690	550	450	360
			250	5660	1740	1640	1430	1270	1150	1000	780	580	
	270	MS	040	22.4	9.67	9.15	8.07	7.22	6.61	5.91	5.03	4.48	4.08
			050	51.1	18.0	17.0	15.0	13.4	12.3	11.0	9.3	8.3	7.5
			063	69.9	45.4	43.0	37.9	33.9	31.0	27.7	23.6	20.9	19.0
			080	141	84.8	80.3	70.8	63.3	57.9	51.7	43.9	38.8	35.1
			100	363	158	149	132	118	108	96	81	71	64
			125	782	311	295	260	232	212	189	159	139	123
			160	1440	659	624	549	490	447	396	328	279	237
			200	2540	1170	1100	970	870	790	700	570	480	390
			250	5660	1740	1640	1440	1280	1170	1020	810	640	470
	300	MS	040	22.4	9.67	9.15	8.10	7.28	6.68	5.96	5.08	4.53	4.13
			050	51.1	18.0	17.0	15.1	13.5	12.4	11.1	9.4	8.4	7.6
			063	69.9	45.4	43.0	38.1	34.2	31.3	28.0	23.8	21.2	19.3
			080	141	84.8	80.3	71.1	63.9	58.5	52.2	44.4	39.4	35.7
			100	363	158	149	132	119	109	97	82	72	65
			125	782	311	295	261	234	214	191	161	142	126
			160	1440	659	624	552	495	452	401	334	287	248
			200	2540	1170	1100	980	880	800	710	580	490	420
			250	5660	1740	1640	1450	1300	1180	1040	840	680	530
	330	MS	040	22.4	9.67	9.15	8.10	7.35	6.73	6.02	5.13	4.57	4.17
			050	51.1	18.0	17.0	15.1	13.6	12.5	11.2	9.5	8.5	7.7
			063	69.9	45.4	43.0	38.1	34.5	31.6	28.2	24.0	21.4	19.5
			080	141	84.8	80.3	71.1	64.4	59.0	52.7	44.8	39.8	36.2
			100	363	158	149	132	120	110	98	83	73	66
			125	782	311	295	261	236	216	193	163	144	129
			160	1440	659	624	552	499	457	406	340	294	257
			200	2540	1170	1100	980	880	810	720	600	510	440
			250	5660	1740	1640	1450	1310	1200	1050	860	710	580

Parallel cam drive

Output torque table

Oscillating series

● PCOS

Oscillating angle (deg)	Total index angle (deg)	Cam curve	Size	Static rated output torque (N·m)	Rated dynamic output torque (N·m)								
					Input shaft rotational speed (rpm)								
					15	30	45	60	75	100	150	200	250
45	120	MS	040	22.4	9.67	8.79	7.50	6.70	6.13	5.46	4.61	4.04	3.60
			050	51.1	18.0	16.3	13.9	12.4	11.4	10.1	8.4	7.3	6.4
			063	69.9	45.4	41.3	35.2	31.4	28.7	25.6	21.4	18.6	16.4
			080	141	84.8	77.1	65.7	58.6	53.5	47.5	39.5	33.9	29.1
			100	363	158	143	122	109	99	87	71	59	48
			125	782	311	283	241	214	195	171	138	112	88
			160	1440	659	597	506	447	403	345	253	167	
			200	2540	1170	1060	890	790	700	590	410		
			250	5660	1740	1570	1310	1140	1000	810	430		
	180	MS	040	22.4	9.67	9.12	7.78	6.95	6.37	5.69	4.83	4.28	3.88
			050	51.1	18.0	16.9	14.5	12.9	11.8	10.5	8.9	7.9	7.1
			063	69.9	45.4	42.8	36.6	32.7	29.9	26.7	22.6	20.0	18.0
			080	141	84.8	80.0	68.2	60.9	55.8	49.7	42.0	36.9	32.9
			100	363	158	149	127	113	104	92	77	67	59
			125	782	311	293	250	223	204	181	151	130	112
			160	1440	659	621	528	470	428	376	302	244	189
			200	2540	1170	1100	930	830	750	660	520	400	
			250	5660	1740	1630	1380	1220	1100	950	690	460	
	240	MS	040	22.4	9.67	9.15	7.99	7.14	6.54	5.84	4.97	4.43	4.03
			050	51.1	18.0	17.0	14.8	13.3	12.1	10.8	9.2	8.2	7.4
			063	69.9	45.4	43.0	37.5	33.5	30.7	27.4	23.3	20.7	18.8
			080	141	84.8	80.3	70.1	62.6	57.3	51.2	43.4	38.4	34.8
			100	363	158	149	130	116	107	95	80	71	63
			125	782	311	295	257	229	210	187	158	138	123
			160	1440	659	624	543	484	442	392	324	275	233
			200	2540	1170	1100	960	860	780	690	560	470	390
			250	5660	1740	1640	1430	1270	1150	1010	800	620	450
	300	MS	040	22.4	9.67	9.15	8.10	7.29	6.68	5.96	5.08	4.53	4.14
			050	51.1	18.0	17.0	15.1	13.5	12.4	11.1	9.4	8.4	7.6
			063	69.9	45.4	43.0	38.1	34.2	31.4	28.0	23.8	21.2	19.4
			080	141	84.8	80.3	71.1	63.9	58.5	52.3	44.5	39.5	35.9
			100	363	158	149	132	119	109	97	82	73	66
			125	782	311	295	261	234	215	191	162	143	129
			160	1440	659	624	552	495	453	402	337	292	255
			200	2540	1170	1100	980	880	800	710	590	510	440
			250	5660	1740	1640	1450	1300	1190	1050	850	700	570
	360	MS	040	22.4	9.67	9.15	8.10	7.41	6.79	6.07	5.17	4.61	4.22
			050	51.1	18.0	17.0	15.1	13.8	12.6	11.3	9.6	8.5	7.8
			063	69.9	45.4	43.0	38.1	34.8	31.9	28.5	24.3	21.6	19.8
			080	141	84.8	80.3	71.1	65.0	59.5	53.2	45.3	40.3	36.7
			100	363	158	149	132	121	111	99	84	75	68
			125	782	311	295	261	238	218	195	165	147	133
			160	1440	659	624	552	504	461	411	346	303	269
			200	2540	1170	1110	980	890	820	730	610	530	460
			250	5660	1740	1650	1450	1330	1210	1070	890	750	640
30	90	MS	040	31.1	14.0	12.6	10.8	9.6	8.8	7.8	6.6	5.8	5.2
			050	70.9	26.1	23.5	20.0	17.9	16.4	14.6	12.2	10.6	9.4
			063	96.9	65.6	59.2	50.5	45.1	41.3	36.7	30.9	27.0	23.9
			080	196	123	111	94	84	77	68	57	49	43
			100	503	229	206	176	157	143	126	104	88	73
			125	1080	451	407	347	309	281	248	202	167	135
			160	2000	954	859	729	645	583	503	380	270	
			200	3520	1690	1520	1280	1130	1020	870	630		
			250	7850	2500	2240	1890	1650	1460	1200	720		

● PCOS

Oscillating angle (deg)	Total index angle (deg)	Cam curve	Size	Static rated output torque (N·m)	Rated dynamic output torque (N·m)								
					Input shaft rotational speed (rpm)								
					15	30	45	60	75	100	150	200	250
30	120	MS	040	31.1	14.0	12.9	11.0	9.9	9.0	8.1	6.9	6.1	5.5
			050	70.9	26.1	24.1	20.6	18.4	16.8	15.0	12.7	11.2	10.0
			063	96.9	65.6	60.8	51.9	46.3	42.4	37.8	32.1	28.3	25.5
			080	196	123	113	97	86	79	70	59	52	47
			100	503	229	212	181	161	147	131	110	95	83
			125	1080	451	418	356	318	290	258	215	184	159
			160	2000	954	883	751	668	607	533	427	342	262
			200	3520	1690	1560	1320	1180	1070	930	730	560	
			250	7850	2500	2310	1960	1730	1550	1330	970		
	180	MS	040	31.1	14.0	13.2	11.5	10.2	9.4	8.4	7.1	6.4	5.8
			050	70.9	26.1	24.7	21.4	19.1	17.5	15.6	13.3	11.8	10.7
			063	96.9	65.6	62.1	53.8	48.1	44.1	39.4	33.5	29.8	27.1
			080	196	123	116	100	90	82	73	62	55	50
			100	503	229	217	188	168	153	137	116	102	92
			125	1080	451	427	370	330	302	269	228	200	179
			160	2000	955	903	781	697	637	565	470	402	346
			200	3520	1690	1600	1380	1230	1120	990	820	690	580
			250	7850	2500	2370	2040	1820	1650	1450	1160	930	720
	240	MS	040	31.1	14.0	13.2	11.7	10.5	9.6	8.6	7.3	6.6	6.0
			050	70.9	26.1	24.7	21.8	19.6	18.0	16.0	13.7	12.2	11.1
			063	96.9	65.6	62.1	55.0	49.4	45.2	40.4	34.4	30.7	28.0
			080	196	123	116	103	92	84	75	64	57	52
			100	503	229	217	192	172	158	141	120	106	96
			125	1080	451	427	378	339	311	277	235	209	189
			160	2000	955	904	799	717	656	584	491	429	381
			200	3520	1690	1600	1410	1270	1160	1030	860	750	660
			250	7850	2500	2370	2090	1870	1710	1510	1250	1060	890
	300	MS	040	31.1	14.0	13.2	11.7	10.7	9.8	8.8	7.5	6.7	6.1
			050	70.9	26.1	24.7	21.8	20.0	18.3	16.4	14.0	12.5	11.4
			063	96.9	65.6	62.1	55.0	50.4	46.2	41.3	35.2	31.4	28.7
			080	196	123	116	103	94	86	77	66	59	53
			100	503	229	217	192	176	161	144	122	109	99
			125	1080	451	427	378	346	317	283	241	214	195
			160	2000	955	904	800	732	670	597	506	446	400
			200	3520	1690	1600	1410	1290	1180	1050	890	780	700
			250	7850	2500	2370	2100	1920	1750	1560	1300	1120	980
	360	MS	040	31.1	14.0	13.2	11.7	10.7	10.0	8.9	7.6	6.8	6.2
			050	70.9	26.1	24.7	21.8	20.0	18.6	16.7	14.2	12.7	11.6
			063	96.9	65.6	62.2	55.0	50.5	46.9	42.0	35.8	31.9	29.2
			080	196	123	116	103	94	88	78	67	60	54
			100	503	229	217	192	176	164	146	125	111	101
			125	1080	451	427	378	347	323	288	245	219	199
			160	2000	955	904	800	733	682	608	516	457	413
			200	3520	1690	1600	1410	1300	1200	1070	910	800	720
			250	7850	2500	2370	2100	1920	1780	1590	1340	1170	1040
15	60	MS	040	35.0	16.3	14.7	12.5	11.2	10.2	9.1	7.7	6.8	6.1
			050	79.8	30.5	27.4	23.4	20.9	19.1	17.0	14.3	12.4	10.9
			063	109	76.7	68.8	58.7	52.4	48.0	42.7	35.9	31.4	27.9
			080	220	143	128	110	98	89	79	66	57	50
			100	567	268	240	205	183	167	147	122	103	86
			125	1220	529	474	404	360	328	289	236	196	159
			160	2250	1120	1000	850	750	680	590	450	320	
			200	3970	1970	1760	1490	1320	1190	1010	740		
			250	8830	2910	2600	2190	1910	1700	1390	850		

Output torque table

● PCOS

Oscillating angle (deg)	Total index angle (deg)	Cam curve	Size	Static rated output torque (N·m)	Rated dynamic output torque (N·m)								
					Input shaft rotational speed (rpm)								
					15	30	45	60	75	100	150	200	250
15	90	MS	040	35.0	16.3	15.2	13.0	11.6	10.6	9.5	8.1	7.2	6.5
			050	79.8	30.5	28.4	24.3	21.7	19.9	17.7	15.0	13.3	12.0
			063	109	76.7	71.4	60.9	54.4	49.9	44.5	37.8	33.4	30.2
			080	220	143	133	114	102	93	83	70	62	56
			100	567	268	250	213	190	174	155	130	114	101
			125	1220	529	492	420	375	343	305	255	221	194
			160	2250	1120	1040	880	790	720	630	520	430	340
			200	3970	1970	1830	1560	1390	1260	1110	890	710	550
			250	8830	2910	2710	2300	2030	1840	1590	1210	860	
	120	MS	040	35.0	16.3	15.5	13.3	11.9	10.9	9.7	8.3	7.4	6.7
			050	79.8	30.5	28.9	24.9	22.3	20.4	18.2	15.5	13.8	12.5
			063	109	76.7	72.6	62.5	55.9	51.2	45.7	38.9	34.6	31.5
			080	220	143	136	117	104	96	85	72	64	58
			100	567	268	254	219	195	179	159	135	119	107
			125	1220	529	501	431	385	352	314	265	233	209
			160	2250	1120	1060	910	810	740	660	550	470	400
			200	3970	1970	1860	1600	1430	1300	1150	950	810	680
			250	8830	2920	2760	2370	2100	1920	1680	1350	1090	840
	180	MS	040	35.0	16.3	15.5	13.7	12.4	11.3	10.1	8.6	7.7	7.0
			050	79.8	30.5	28.9	25.6	23.1	21.2	18.9	16.1	14.4	13.1
			063	109	76.7	72.6	64.3	58.0	53.1	47.5	40.5	36.1	33.0
			080	220	143	136	120	108	99	89	76	67	61
			100	567	268	254	225	203	186	166	141	125	114
			125	1220	529	501	443	400	366	327	278	247	224
			160	2250	1120	1060	940	840	770	690	580	510	460
			200	3970	1970	1860	1650	1490	1360	1210	1020	890	790
			250	8830	2920	2760	2440	2200	2010	1780	1480	1270	1100
	240	MS	040	35.0	16.3	15.5	13.7	12.6	11.6	10.4	8.9	7.9	7.2
			050	79.8	30.5	28.9	25.6	23.5	21.7	19.4	16.6	14.8	13.5
			063	109	76.7	72.6	64.3	59.0	54.6	48.7	41.6	37.1	34.0
			080	220	143	136	120	110	102	91	78	69	63
			100	567	268	254	225	206	191	170	145	129	118
			125	1220	529	501	443	407	376	336	286	255	232
			160	2250	1120	1060	940	860	790	710	600	530	480
			200	3970	1970	1870	1650	1510	1400	1250	1060	930	840
			250	8830	2920	2760	2440	2240	2070	1840	1550	1350	1200
	300	MS	040	35.0	16.3	15.5	13.7	12.6	11.7	10.6	9.0	8.1	7.4
			050	79.8	30.5	28.9	25.6	23.5	22.0	19.8	16.9	15.1	13.8
			063	109	76.7	72.6	64.3	59.0	55.1	49.7	42.5	37.9	34.7
			080	220	143	136	120	110	103	93	79	71	65
			100	567	268	254	225	206	193	174	148	132	121
			125	1220	529	501	443	407	380	343	292	261	238
			160	2250	1120	1060	940	860	800	720	620	550	500
			200	3970	1970	1870	1650	1510	1420	1270	1080	960	870
			250	8830	2920	2760	2440	2240	2090	1880	1590	1410	1260
	360	MS	040	35.0	16.3	15.5	13.7	12.6	11.7	10.8	9.2	8.2	7.5
			050	79.8	30.5	28.9	25.6	23.5	22.0	20.1	17.2	15.4	14.1
			063	109	76.7	72.6	64.3	59.0	55.2	50.6	43.2	38.6	35.3
			080	220	143	136	120	110	103	94	81	72	66
			100	567	268	254	225	206	193	177	151	135	123
			125	1220	529	501	443	407	380	349	297	265	243
			160	2250	1120	1060	940	860	800	740	630	560	510
			200	3970	1970	1870	1650	1510	1420	1300	1100	980	890
			250	8830	2920	2760	2440	2240	2090	1920	1630	1440	1300

Circular P&P drive

PPIM/PP$\overset{\text{I}}{\text{O}}H/PP\overset{\text{I}}{\text{O}}$X

CONTENTS

In addition to the transport of various small parts by the P&P drive, the launch of the PPIM Series with a compact, high speed and high accuracy brings enhancement to the lineup.

Compact, high speed, high accuracy

PPIM Series

Achieving high accuracy (indexing accuracy of ±30") and high rigidity in compact space.
New short lift.

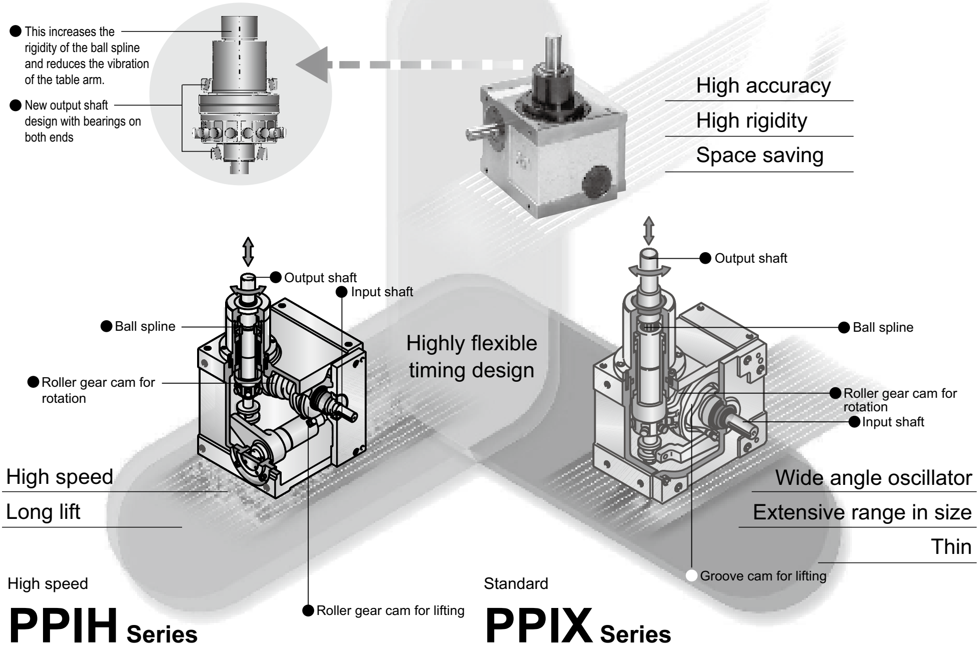

High speed

PPIH Series
PPOH Series

High speed rotation (Max 600 rpm).
Long lift.

Standard

PPIX Series
PPOX Series

Wide angle oscillator offered in an extensive size range.
Thin with max. oscillating angle of 180 degrees.

Circular P&P drive selection guide

Specifications

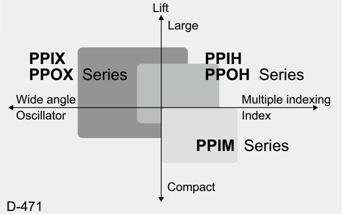

Accuracy

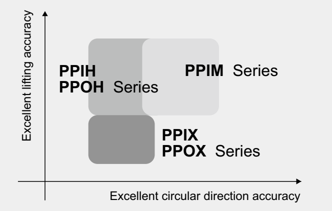

Capacity

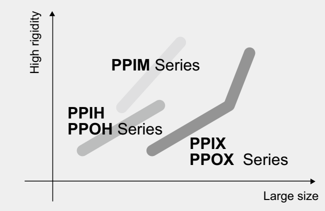

Compact, high speed, high accuracy PPIM Series featuring a newly developed output shaft design.

Optimized for conveying compact parts, semiconductor chips and electronic parts at high speed with high accuracy, New Circular Pick & Place drive 3 Series.

Compact, high speed, high accuracy

PPIM Series
Indexing movement

New

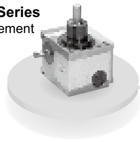

● Shaft interval / 63, 80, 110 mm
● Lift / 4 to 15 mm
● Application examples/ Tester and taping machine for semiconductor chips and electronic parts.

High speed

PPIH Series
Indexing movement

PPOH Series
Oscillator movement

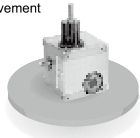

● Shaft interval / 40, 50, 63, 80 mm
● Lift / 5 to 40 mm
● Application examples/ Tester and taping machine for semiconductor chips and electronic parts.

Standard

PPIX Series
Indexing movement

PPOX Series
Oscillator movement

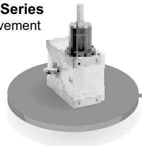

● Shaft interval / 50, 63, 110, 140, 180 mm
● Lift / 5 to 70 mm
● Application examples / transporting small parts such as discs and batteries.

High accuracy (rotation)

Thanks to the new output shaft construction, the circular accuracy is improved and the indexing accuracy of ±30" (seconds) is achieved.

High rigidity

Rigidity of the ball spline is increased and torsion rigidity is doubled. (compared with our previous products)

Space saving

The volume is reduced by half. (compared with our previous models)

High speed rotation

Roller gear cam is adopted for circular motion and lifting, and the input shaft speed allows the max. of 600 rpm (tact 0.1 sec.).

High accuracy lift

Employing the roller gear cam for lifting increases the accuracy in lifting direction.

Multiple index

Standard up to 16 divisions. (single dwell)

High speed, long lift

High speed rotation and long lifting compatible.

Large lift

PPIH and PPOH support the motion up to 40 mm, while PPIX and PPOX support it up to 70 mm.

Wide angle oscillator

Max. oscillating angle of 180 degrees.

Extensive range in size

Shaft interval: Available in 6 sizes of 50, 63, 80, 110, 140 and 180 mm.

Highly flexible timing design

Flexible timing design since a small index angle can be chosen.

Basic movement

PPIM/PPIH/PPIX

Index P&P movement

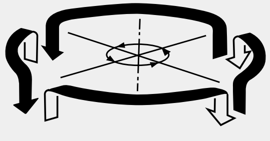

PPOH/PPOX

Oscillator P&P movement

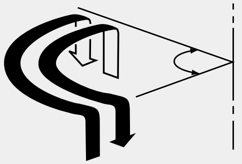

Major applications

● Tester and taping machine for semiconductor chips and electronic parts.

● Conveying small parts and electronic parts at high speed with high accuracy.

● Conveying small parts such as discs and batteries.

Applications

● Inspection and taping of electronic parts

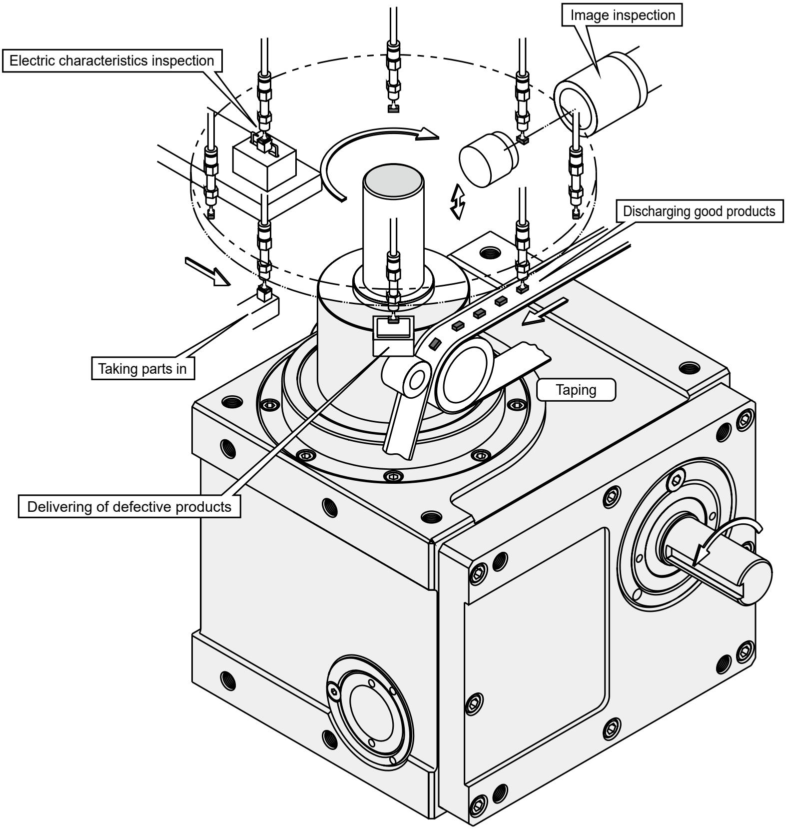

- Pick and place to and from the index table.

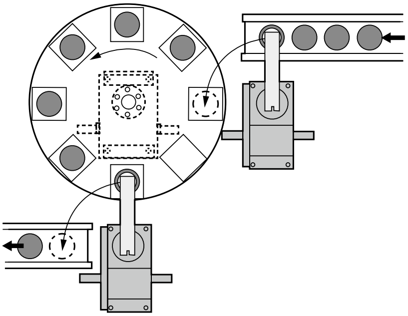

- Pick and place with a single PPIH and PPIX (Index P&P motion).

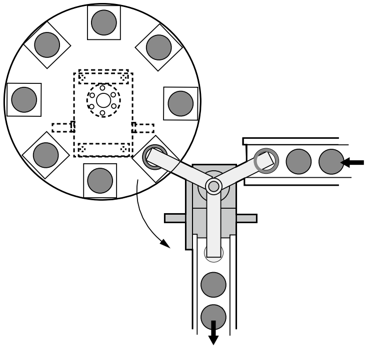

- Supply and transfer from the conveyor.

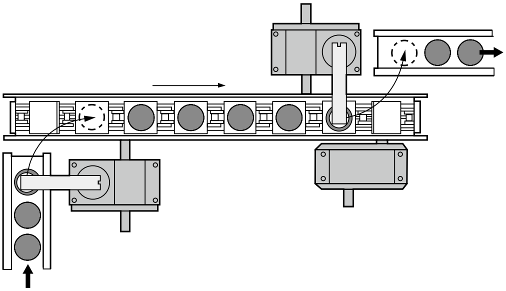

- Supply and transfer with a single PPOH and PPOX (Oscillator P&P motion).

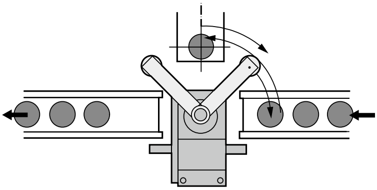

- Lift and transfer to a position in a different path level.

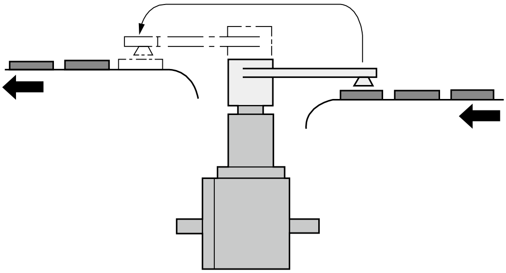

- Lift while maintaining the direction of the workpiece.

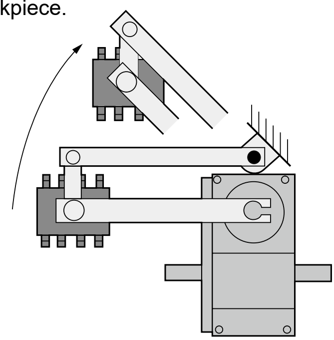

Motion and explanation

Timing chart

- The timing chart is essential when determining the specifications of a cam P&P drive as well as the model number. (Create the timing chart referring to the examples below.)
- When you drive the input shaft intermittently, set up dwell angle as a standby point as in examples (3) and (4), and determine the timing so that the cycle can be stopped within the dwell interval.
- Use overlap effectively so that load is reduced and work time (dwell interval) is ensured.
- Calculate overlap referring to "Index drive Catalog (Cam curve characteristics table)." (Note that displacement varies depending on the cam curve.)

Motion and timing chart example

(1) Motion in which rotation and lifting do not overlap in timing

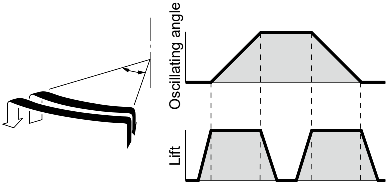

(2) Overlapping motions

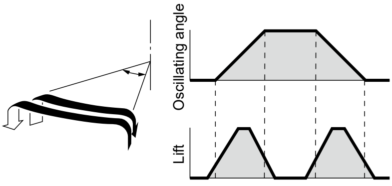

(3) Motion with a standby point (dwell angle) at the oscillating ends

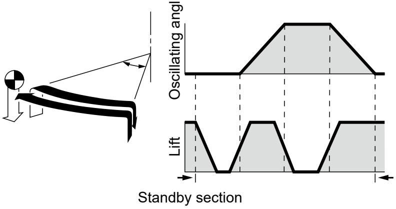

(4) Motion with a standby point (dwell angle) in oscillation

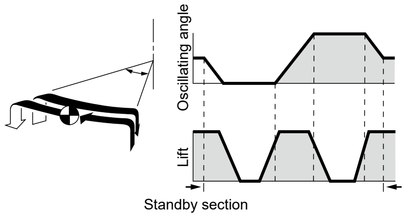

(5) Motion with a different path level (different amount of lift)

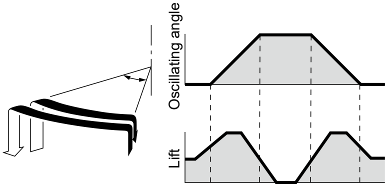

(6) Motion as Index P&P

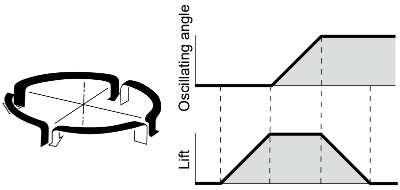

● MEMO

PPIM/PP$^{\text{I}}_{\text{O}}$H/PP$^{\text{I}}_{\text{O}}$X Series

Size selection method

When you select specifications and model of a P&P drive, first determine the following primary specifications.

[Operating conditions]
- Oscillating angle (Index number)
- Lift
- Index angle
- Cam curve
- Input shaft rotational speed
- Driving method

[Load conditions]
- Payload
- Arm diameter (Table diameter)
- External load

First, provisionally determine a size comparing the actual load torque applied to the output shaft when the P&P system is run under these conditions with the rated dynamic output torque of the P&P drive and the arm radius (table diameter) with the allowable arm radius (allowable table diameter).
Then, finalize the selection considering the service life, payload and spiral angle.
When you select a P&P drive, you should design the arm diameter to be as small as possible and as light as possible from the beginning. When you create the timing chart, set the index angle large taking advantage of the overlap. Taking all these factors into consideration in designing may help you reduce the size of a P&P drive, which can contribute to saving space and costs.

Size selection flow chart

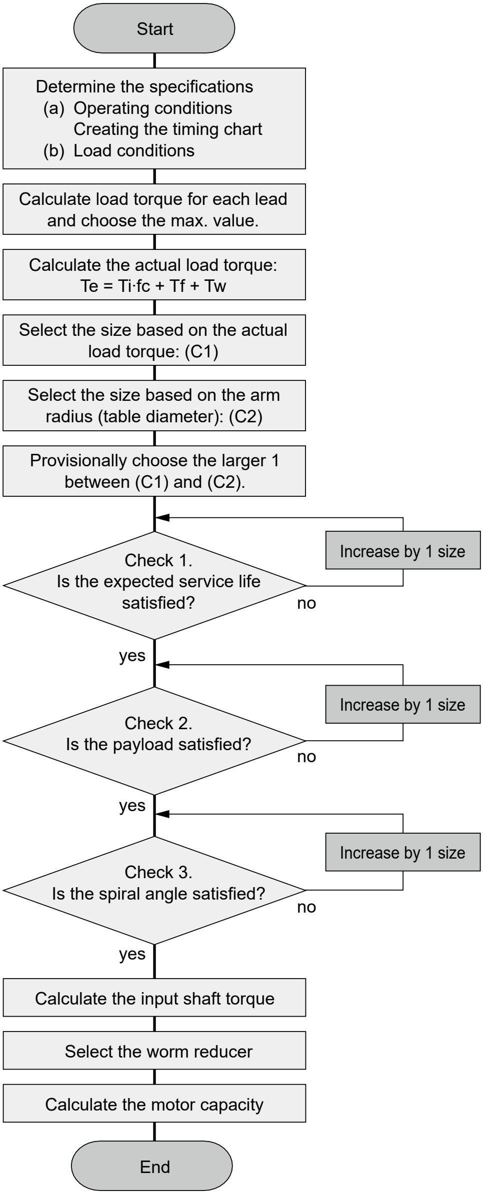

1. Calculating the load torque

Create a timing chart and calculate load torque Tt for each lead range. Choose the max. value.

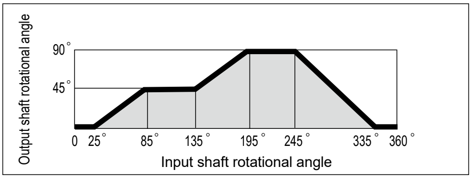

Three different types of torque, i.e., inertial torque, frictional torque and work torque, apply to the output shaft of a P&P drive. The total of these 3 is called the load torque.

$$Tt = Ti + Tf + Tw \ (N \cdot m)$$

Here, Tt = load torque (N·m)

Ti: Inertial torque (N·m)

Tf: Frictional torque (N·m)

Tw: Work torque (N·m)

(1) Inertial torque: Ti

The inertial torque is the torque required to accelerate/decelerate the arm (table), the jigs and the workpieces mounted on the output shaft during indexing.

The inertia torque can be obtained by multiplying the moment of inertia with the output shaft max. angular acceleration.

$$Ti = I \cdot \alpha \ (N \cdot m)$$

Here, I is the total moment of inertia ($kg \cdot m^2$).

α: Max. angular acceleration of the output shaft (rad / s^2)

(1) - 1 Total moment of inertia: I

This indicates the total moment of inertia for various objects with an identical center of rotation. Refer to the moment of inertia formulas.

$$I = I\,1 + I\,2 + \ldots\ldots\ldots + I\,n \ (kg \cdot m^2)$$

(1) - 2 Max. angular acceleration of the output shaft: α

The max. output shaft angular acceleration can be obtained with a formula which consists of the non-dimensional max. acceleration Am of the cam curve, index number n, index angle θh and input shaft rotational speed N.

■ Index

$$\alpha = Am \cdot \frac{2\pi}{n} \cdot \left(\frac{360}{\theta h} \cdot \frac{N}{60}\right)^2 (rad/s^2)$$

Here, Am = non-dimensional max. acceleration of cam curve.

	MS Modified sine curve	MC Modified constant velocity curve	MT Modified trapezoidal curve	TR trapecloid
Am	± 5.53	± 8.01	± 4.89	± 6.17

n : Index number

θh : Index angle (°)

N : Input shaft rotational speed (rpm)

■ Oscillator

$$\alpha = Am \cdot \frac{\pi \cdot \psi}{180} \cdot \left(\frac{360}{\theta h} \cdot \frac{N}{60}\right)^2 (rad/s^2)$$

Here, ψ is the oscillating angle (°).

(2) Frictional torque: Tf

The friction torque is a torque applying to the output shaft due to friction of the bearing and the sliding surfaces. Frictional torque can be obtained using the following formula.

$$Tf = \mu \cdot Ff \cdot Rf \ (N \cdot m)$$

$$Ff = mg$$

Here, μ = coefficient of friction

Rolling friction	Sliding friction
μ = 0.03 to 0.05	μ = 0.1 to 0.3

Ff : Force applying to a sliding surface and a bearing (N)

Rf: Average frictional radius (m)

m : Weight (kg)

g : Gravitational acceleration (m/s^2)

(3) Work torque: Tw

When the output shaft does a job while operating or when an external load acts on the output shaft as a load, the total of these is the work torque. For example, when the output shaft is set up to be horizontal, the forces caused by the arm (table), the jigs and the workpieces as eccentric load are to be considered as work torque.

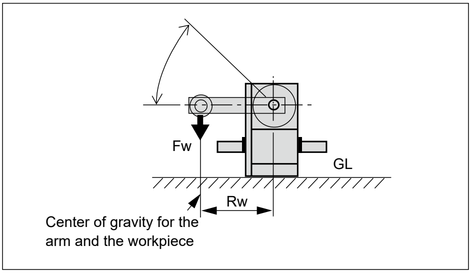

Work torque can be obtained using the following formula.

$$Tw = Fw \cdot Rw \ (N \cdot m)$$

Here, Fw : Force required for work (N)

Rw : Radius for work (m)

(CAUTION)

Compare a torque which applies when the input shaft stops to the rated static output torque.

Size selection method

2. Calculating the actual load torque: Te

The load torque mentioned above is the theoretical torque. The actual load torque applying to the output shaft of a P&P drive is greater than this because of the rigidity of the driving system, presence of backlash and the coupling method. Furthermore, how the unit is used critically affects it.
Hence, you should calculate the actual load torque taking the usage factor for your operational conditions which you have obtained through experience into consideration.

$$Te = Ti \cdot fc + Tf + Tw \ (N \cdot m)$$

Here, fc = Usage factor

(Table 1) Usage factors for various driving methods

Input system driving method	Reduction ratio of the reducer	
	≤ 1/20 1/10, 1/20	Exceeding 1/20 1/30, 1/40 1/50, 1/60
Direct worm (1)	1.6	1.5
Direct worm (2)	1.7	1.6
Indirect worm	2.1	1.9
Geared motor	3.7	3.7

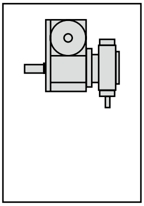

Direct worm (1)
Worm reducer is directly mounted on the housing.

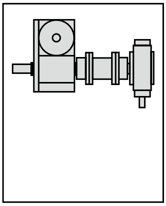

Direct worm (2)
Connected with a coupler.

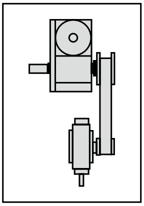

Indirect worm

(CAUTION)
When you design a system, be sure to give sufficient rigidity for the drive system from the motor to the input shaft of a P&P drive minimizing backlash. This allows you to reduce the usage factors and helps you select the suitable unit size. Backlash in the system may cause vibration while the arm is rotating, shortening the service life of the unit, and damaging the components.

(1) Avoid inserting a camshaft in series between the motor and the input shaft of a P&P drive. If not avoidable, design the system taking the following factors into consideration.
  (1) Increase the rigidity of the cam shaft.
  (2) Select the connecting method of min. backlash.
  (3) Select the motor capacity with a sufficient margin.
  (4) Use a timing belt of high rigidity.

(2) When you connect the input shaft of a P&P drive directly to the output shaft of a reducer with a coupling, be sure to use a coupling of high rigidity which does not have backlash. You also have to consider that the center height should be adjustable.

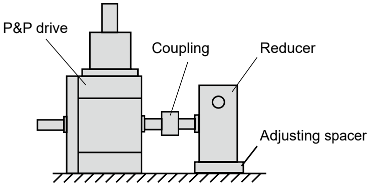

Example of driving

3. Size selection

First, provisionally select a size which satisfies the actual load Te from the output torque table. (C1)

$Tr \geq Te$

Next, provisionally select a size which satisfies the max. arm radius Rm (max. table diameter Dm). (C2)

$Rm \geq Ra$

Rm : Allowable arm radius (mm)
Ra : Allowable arm radius (mm)

$Dm \geq De$

Dm : Allowable table diameter (mm)
De : Max. table diameter (mm)

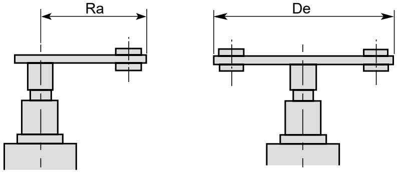

SizeC (Shaft interval)	Allowable arm radius Rm (mm)	Allowable table diameter Dm (mm)
PP I H PPOH 040	120	200
PP I H.PP I X PPOH PPOX 050	150	250
PPIM· PP I H.PP I X PPOH PPOX 063	190	320
PPIM· PP I H.PP I X PPOH PPOX 080	240	400
PP I M·PP I X PPOX 110	330	550
PP I X PPOX 140	420	700
PP I X PPOX 180	540	900

Provisionally select the larger size comparing C1 and C2.

(Check. 1) Service life: Lh

We design our products to have the service life of 10,000 hours based on the service life for rolling fatigue of the race surface of the cam follower at the input shaft rotational speed at the rated torque.

When you need a service life longer than 10,000 hours, determine the required torque using the following formula taking the service life coefficient into consideration.

$$fh = \frac{Tr}{Te}$$

$$Lh = 10000 \cdot fh^{(10/3)}$$

Here, Tr = dynamic rated output torque (N·m)

fh: Service life coefficient
Lh: Service life hours (h)

Verify the service life is above the expected service life. If it is not, the size of the P&P drive should be increased.

(Table 2) Service life and the coefficient of service life

Lh (h)	fh	Lh (h)	fh
10,000	1.000	40,000	1.516
15,000	1.129	50,000	1.621
20,000	1.231	70,000	1.793
25,000	1.316	100,000	1.995
30,000	1.390		

If you choose a service life longer than necessary when you select a model, the size of the P&P drive will become large, which is uneconomical. Considering the actual time when the input shaft of the P&P drive is operating, choose the economical service life when you design the system.

(Check. 2) Allowable payload: Mm

Allowable payload may vary depending on the vertical lift, index angle and input shaft speed. Confirm that it satisfies the following formula referring to the allowable payload table. If work load applies while lifting, calculate the converted weight and add this to the load torque.

$Mm \geq me$

Here, Mm : Allowable payload (kg)
me: Max. payload (kg)

If the above formula is not satisfied, increase the size.

(Check. 3) Spiral angle: βe

Since ball spline is used for the output shaft of the P&P drive the torsion rigidity is small compared to the regular index drive because of its mechanism. If the spiral angle becomes too large, faults such as residual vibration may occur.

To safely use a P&P drive against residual vibration, we recommend calculating the amplitude at the location where the workpiece is mounted based on the rotational torque (actual load torque).

$$\beta e = \frac{180}{\pi} \cdot \frac{Te}{K} (°) \text{ - (Formula - 1)}$$

Here, βe : Spiral angle (°)
K: Torsion rigidity (N·m/rad)

Torsion rigidity: K (N·m/rad)

Series	040	050	063	080	110	140	180
PPIM	-	-	15000	40000	60000	-	-
PPIH/PPOH	1200	4200	10000	20000	-	-	-
PPIX/PPOX	-	1200	4200	10000	20000	30000	70000

$a0 = \pm Rp \cdot \sin \beta e$ - (Formula - 2)

Here, a0 = amplitude (mm)
Rp: Workpiece mounting radius (mm)

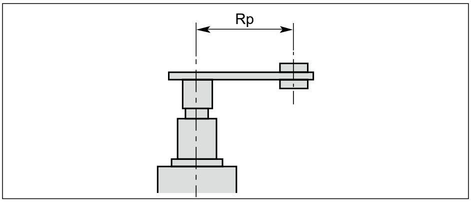

Our standard is that a0 should be ±0.1 or less.
The a0 obtained through the above calculation is the value when the actual converted load torque Te applies to the output shaft. Vibration attenuates while it moves from top to bottom. However, if a0 is too large, vibration remains at the bottom dead center.

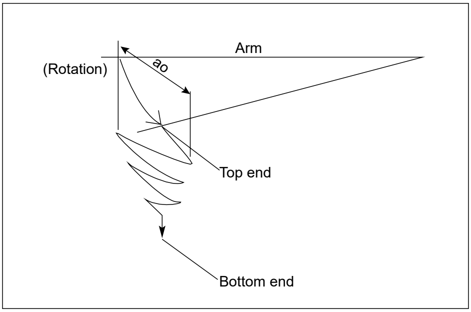

* The rigidity calculated here is only for the P&P drive, and the rigidity of the arm is not included in the calculation. When the output shaft is stopped and an external force such as torque which includes gravity is to be applied, the 1 and 2 formulae can be used to estimate the actual stopping position which includes torsion.

4. Calculating the input shaft torque: Tc

For general P&P motions, calculate the cam shaft torque for the rotating section and the lifting section, and choose the larger value.
If rotation and lifting motions overlap, choose the sum of these 2 values.

(1) Input shaft torque at the rotating section: Tc1

$$Tc1 = \frac{\psi}{\theta h} \cdot \{Qm \cdot Ti + Vm \cdot (Tf + Tw)\} + Tin$$

Here, ψ = Oscillating angle $\psi = \frac{360}{n}$ (°)
θh : Index angle (°)
Qm: Torque coefficient
Vm: Non-dimensional max. speed
Tin: Internal frictional torque (N·m)

List of Qm, Vm and Am

	MS Modified sine curve	MC Modified constant velocity curve	MT Modified trapezoidal curve	TR trapecloid
Qm	± 0.99	± 0.72	± 1.65	± 1.76
Vm	1.76	1.28	2.00	2.18
Am	± 5.53	± 8.01	± 4.89	± 6.17

(2) Input shaft torque at the lifting section: Tc2

$$T_{C2} = \frac{2.06 \times 10^{-3} \cdot Am \cdot Qm \cdot (me+mo) \cdot Lo^2 \cdot N^2}{\theta h^3} + \frac{0.057 \cdot Vm \cdot \{(me + mo) \times 9.81 + Ffl + Fwl\} \cdot Lo}{\theta h} + Tin$$

Here, Lo : Lift (mm)
N : Input shaft rotational speed (rpm)
θh : Index angle (°)
me : payload (kg)
mo : Output shaft inner weight (kg)
Ffl : Force applying to sliding surfaces for lifting (N)
Fwl : Force required for lifting (N)

(3) Input shaft torque when overlapping: Tc

$$Tc = Tc1 + Tc2 - Tin$$

(CAUTION)
The input torque obtained here is a torque required to drive the P&P drive. You also have to consider a torque externally applied as load to the input shaft.

5. Selecting the worm reducer

Calculate a torque Ter of the output shaft of the reducer (HO series) using the following formula.

Ter = Tc × fr (N·m)

Here, Ter = load torque (N·m) of the reducer
Tc : P&P drive input shaft torque
fr : Reducer usage factor
(Refer to Table 3.)

Compare Ter obtained here in the worm reducer (HO series) rated output torque table to verify that the reducer can be used combined with the P&P drive. If Ter is greater than the worm reducer rated output torque in the standard combination, the size of the reducer should be increased. For details, contact CKD.

(Table 3) Reducer usage factor: fr

	Operational hours per day		
	2 time	10 time	24 time
Continuous operation	0.90	1.25	1.50
Intermittent operation	1.25	1.5	1.75

6. Calculating the motor capacity

Calculating the motor capacity: P
You can obtain the motor capacity for the P&P drive itself from the input shaft torque and input shaft rotational speed of the P&P drive.

$$P = \frac{T_c \cdot N}{9550 \cdot \eta} \text{(KW)}$$

Here, P = motor capacity (kW)
Tc : Input shaft torque (N·m)
N : Input shaft rotational speed (rpm)
η : Efficiency of the reducer ($\eta < 1$)

* Pr when a worm reducer is used.
Add the motor capacity of the worm reducer itself to the above formula.

$$Pr = \frac{Tinr \cdot Nr}{9550} \text{(KW)}$$

Here, Tinr = Internal frictional torque of the reducer (N·m).
Nr : Worm shaft rotational speed (rpm)

The table indicates the relationship between the oil temperature of the HO reducer and its internal friction torque for each size. When we make calculations, we assume the oil temperature to be 10 degrees C unless otherwise stated.

(Table 4) Internal frictional torque of the HO reducer: Tinr (N·m)

HO reducer size	Oil temperature ( ) is viscosity (ISO viscosity grade VG320).			
	5°C ($5500\ mm^2/s$)	10°C ($3200\ mm^2/s$)	15°C ($2000\ mm^2/s$)	20°C ($1400\ mm^2/s$)
HO32	0.30	0.24	0.19	0.16
HO40	0.53	0.42	0.34	0.29
HO50	0.92	0.72	0.59	0.50
HO60	1.5	1.1	0.93	0.79
HO80	2.9	2.2	1.8	1.4
HO100	4.0	3.1	2.5	2.0
HO135	5.7	4.5	3.6	2.9

When you use a worm reducer other than the HO series, add to Pr the value obtained by converting the internal frictional torque given in the technical data into the motor capacity.
In addition, since the viscosity of lubricating oil in the reducer becomes high in the cold climate region or during cold winter mornings, a higher motor capacity will become necessary. As a result, the motor capacity may become insufficient failing to obtain the expected speed. In the worst case, the motor may become stuck.
Therefore, select a motor with sufficient margin for the calculation.

Specification check sheet for selecting a P&P drive

CKD
TO: (   )

Company name		Name	
Department/Section			
TEL		FAX	

Model to be selected: ☐ PPIM ☐ PPIH/PPOH ☐ PPIX/PPOX

Operating conditions

1. Oscillating angle: ψ = ☐ ° or index number: n = ☐
2. Lift: Lo = ☐ mm
3. Input shaft rotating direction: ☐ Direction a ☐ Direction b
4. Output shaft rotating direction (PPIM/PPIH/PPIX): ☐ Direction c ☐ Direction d
5. Input shaft rotational speed: N = ☐ rpm
6. Cam curve: ☐ MS (standard) ☐ Other ☐
7. Input shaft driving method
   - ☐ Direct worm (1) [mounting HO, etc.]
   - ☐ Direct worm (2) [worm reducer connected via coupling]
   - ☐ Indirect worm [chain & belt drive]
   - ☐ Geared motor

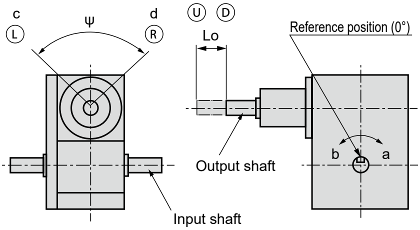

8. Expected service life ☐ hrs.
   Unless otherwise specified, this will be calculated as 10,000 hours.
9. Timing chart
   * Create the timing chart referring to the following points.
   - Input shaft reference point (keyway position) • Input shaft rotational direction
   - Relationship between the positions of output shaft (L), (R), (D) and (U) and the input shaft rotational angle (However, for Index P&P motion PPIM/PPIH/PPIX, ignore the positions of (L) and (R).)

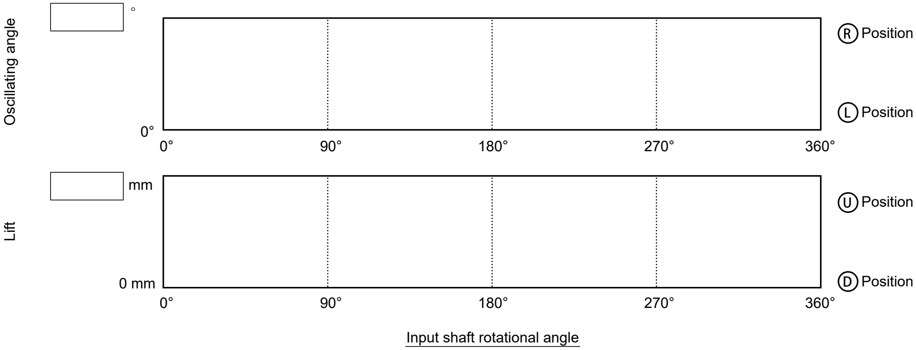

Load conditions and others

● MEMO

Circular P&P drive Compact, high speed and high accuracy

PPIM Series

● Shaft interval: 63, 80 and 110 mm

Specifications

Descriptions			PPIM063					PPIM080					PPIM110				
Swing direction	Note 1. Index specifications	Index number Note 2	4	6	8	12	16	4	6	8	12	16	4	6	8	12	16
		Min. index angle °	140	105	75	60	90	160	120	80	60	90	150	100	75	60	90
		Indexing accuracy " (sec.)	±30														
		Repeatability " (sec.)	20														
		Dwell accuracy " (sec.)	30 (dwell angle 90 degrees or less), 60 (dwell angle exceeding 90 degrees) Note 3.														
		Cam curve	MS curve (standard), MC curve, MT curve, Trapecloid curve														

Descriptions		PPIM063				PPIM080				PPIM110					
Lift direction	Lift range (mm)	4 to 10								4 to 15					
	Standard lift mm	4	6	8	10	4	6	8	10	4	6	8	10	12	15
	Min. index angle °	32	39	45	50	31	37	43	47	22	27	31	34	37	41
	Stroke accuracy mm	±0.1													
	Repeatability mm	±0.02													
	Cam curve	MS curve													
Input shaft rotational speed rpm		max.600													
Product weight kg		18				32				68					
Oil level ℓ		1.0				1.8				4.0					
Paint color		Silver													

Note 1. For oscillation specifications, contact CKD.
Note 2. For specifications whose index number exceeds 16, contact CKD.
Note 3. When you prefer the specification exceeding dwell angle of 90 degrees with dwell accuracy of 60", contact CKD.
Note 4. For details of accuracy, refer to the page B-30.

How to order

RPIM 063 - 016 010 S L S 1 - X012345
Ⓐ Ⓑ Ⓒ Ⓓ Ⓔ Ⓕ Ⓖ Ⓗ Ⓘ

Ⓐ Model No.	Ⓑ Shaft interval		Ⓒ Index number (n) and oscillating angle (ψ)		Ⓓ Lift (Lo)		Ⓔ Cam curve		Ⓕ Spiral direction of the cam	
PPIM Index P&P Motion	063 080 110	63 mm 80 mm 110 mm	PPIM Index number (n)		004 to 015	4 mm to 15 mm	S	MS curve (standard)	PPIM (spiral direction of the cam)	
			004 006 008 012 016	4 6 8 12 16			C	MC curve (MCV50)	L	Left helix (standard) 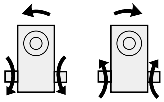
							T	MT curve		
							P	Trapecloid curve		
							*	This indicates the cam curve for the swing direction. When there are more than 1 cam curve, this will be "x".	R	Right helix 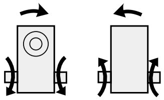

Ⓖ Shape of the output shaft		Ⓗ Installation position		Ⓘ Special specification No.
S	Straight (without keyway) * For the following specifications, contact CKD. • With Torque saver	1	Position 1 Output shaft facing upward * For the position other than #1, contact CKD.	* To place an order for a P&P drive, "Special specification number" is required. The special specification model number shall be determined after the consultation with the customer. Mounting options are available upon request. Please provide CKD with the specifications.

Dimensions

● Body

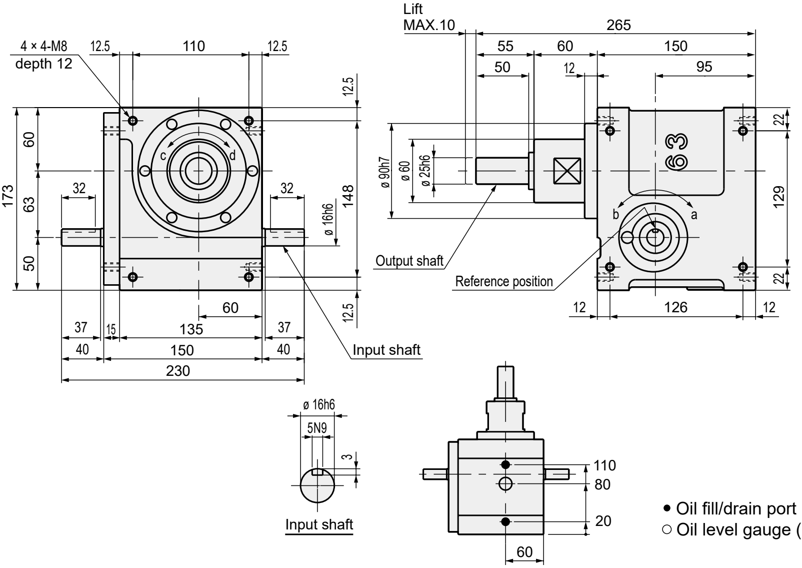

- ● Oil fill/drain port (Rc1/4)
- ○ Oil level gauge (ø 20)

Characteristics

Descriptions	Characteristics	
	Output shaft	Input shaft
Allowable thrust force N	*	850
Allowable radial force N	200	1200
Allowable bending moment N·m	30	-
Torsion rigidity (K) N·m/rad	15000	-
Moment of inertia kg·m^2	1.49 × 10^{-3}	2.09 × 10^{-3}

Descriptions	Characteristics
Internal frictional torque (Tin) N·m	5
Output shaft inner weight (mo) kg	0.8
Product weight kg	18
Oil level ℓ	1.0
Paint color	Silver

* Allowable output shaft thrust force is defined in the following formula.
Output shaft allowable thrust force = (allowable payload - max. payload) × 9.81 (N)

Accuracy

Descriptions	Swing direction	Descriptions	Lift direction
	Index		
Indexing accuracy " (sec.)	±30	Stroke accuracy mm	±0.1
Repeatability " (sec.)	20	Repeatability mm	±0.02
Dwell accuracy " (sec.)	30 (60)		

Value in parentheses ( ) is when the dwell angle exceeds 90 degrees.

Output torque table

PPIM063 Cam curve/MS

Index number *n*	Index angle *θh* (°)	Static rated output torque (N·m)	Dynamic rated output torque *Tr* (N·m)									
			Input shaft rotational speed *N* (rpm)									
			60	90	120	150	200	250	300	400	500	600
4	140	48.1	21.7	18.4	16.3	14.7	12.6	11.0	9.5	6.6		
	180	67.4	35.5	30.2	26.9	24.5	21.6	19.5	17.7	14.7	12.0	9.3
6	105	17.1	10.6	10.1	9.7	9.3	8.5	7.1	5.7			
	120	17.1	11.6	11.1	10.6	10.2	9.6	8.3	7.0			
	150	17.1	13.0	12.5	12.1	11.7	11.2	9.9	8.8	6.8		
	180	48.1	30.4	25.9	23.1	21.0	18.6	16.8	15.4	13.0	10.9	8.9
8	75	67.4	30.4	25.8	22.8	20.5	17.5	14.9	12.6	8.0		
	90	67.4	34.3	29.2	25.9	23.4	20.4	17.9	15.8	11.8	7.9	
	120	87.7	53.4	45.5	40.5	37.0	32.8	29.6	27.1	22.9	19.3	15.9
	150	87.7	58.6	50.0	44.6	40.8	36.2	32.9	30.4	26.3	23.0	20.1
	180	87.7	62.2	53.1	47.4	43.4	38.6	35.2	32.6	28.6	25.4	22.8
12	60	17.1	11.1	10.5	10.0	9.4	8.4	6.6				
	90	48.1	29.4	25.0	22.2	20.2	17.7	15.7	14.0	11.0	8.1	5.1
	120	48.1	32.3	27.6	24.6	22.4	19.8	17.9	16.3	13.7	11.5	9.3
	150	67.4	48.8	41.6	37.1	34.0	30.2	27.5	25.4	22.2	19.6	17.4
	180	67.4	50.0	43.3	38.6	35.4	31.5	28.8	26.6	23.4	21.0	18.9
16	90	17.1	14.8	14.2	13.7	13.4	12.8	11.4	10.1	7.9	5.8	
	120	17.1	15.9	15.3	14.8	14.5	14.0	12.6	11.5	9.7	8.0	6.4
	150	17.1	16.4	16.0	15.5	15.2	14.7	13.4	12.3	10.6	9.2	7.9
	180	17.1	16.6	16.4	16.0	15.6	15.2	13.9	12.8	11.2	9.9	8.7

Payload table

PPIM063 Cam curve/MS

Lift *Lo* (mm)	Index angle *θh* (°)	Rated dynamic payload *Mm* (kg)									
		Input shaft rotational speed *N* (rpm)									
		60	90	120	150	200	250	300	400	500	600
4	32	12.0	12.0	12.0	12.0	7.6	5.1	3.5	1.7	0.8	0.3
	50	12.0	12.0	12.0	12.0	12.0	11.7	8.8	5.2	3.2	2.1
	70	12.0	12.0	12.0	12.0	12.0	12.0	12.0	9.9	6.7	4.7
	90	12.0	12.0	12.0	12.0	12.0	12.0	12.0	12.0	10.7	7.9
	120	12.0	12.0	12.0	12.0	12.0	12.0	12.0	12.0	12.0	12.0
6	39	12.0	12.0	12.0	11.8	7.5	4.9	3.4	1.7	0.8	0.3
	50	12.0	12.0	12.0	12.0	11.7	8.2	5.9	3.3	1.9	1.1
	70	12.0	12.0	12.0	12.0	12.0	12.0	11.1	6.8	4.4	3.0
	90	12.0	12.0	12.0	12.0	12.0	12.0	12.0	10.8	7.4	5.2
	120	12.0	12.0	12.0	12.0	12.0	12.0	12.0	12.0	12.0	9.2
8	45	12.0	12.0	12.0	11.7	7.4	4.9	3.3	1.6	0.8	0.3
	60	12.0	12.0	12.0	12.0	12.0	8.7	6.3	3.6	2.1	1.2
	80	12.0	12.0	12.0	12.0	12.0	12.0	10.9	6.6	4.3	2.9
	100	12.0	12.0	12.0	12.0	12.0	12.0	12.0	10.1	6.9	4.8
	120	12.0	12.0	12.0	12.0	12.0	12.0	12.0	12.0	9.7	7.0
10	50	12.0	12.0	12.0	11.4	7.2	4.7	3.2	1.6	0.7	0.3
	70	12.0	12.0	12.0	12.0	12.0	9.4	6.9	3.9	2.3	1.4
	90	12.0	12.0	12.0	12.0	12.0	12.0	10.9	6.7	4.3	2.9
	120	12.0	12.0	12.0	12.0	12.0	12.0	12.0	11.4	7.9	5.6

Pick and Place drive **PPIM 080**

Dimensions

● Body

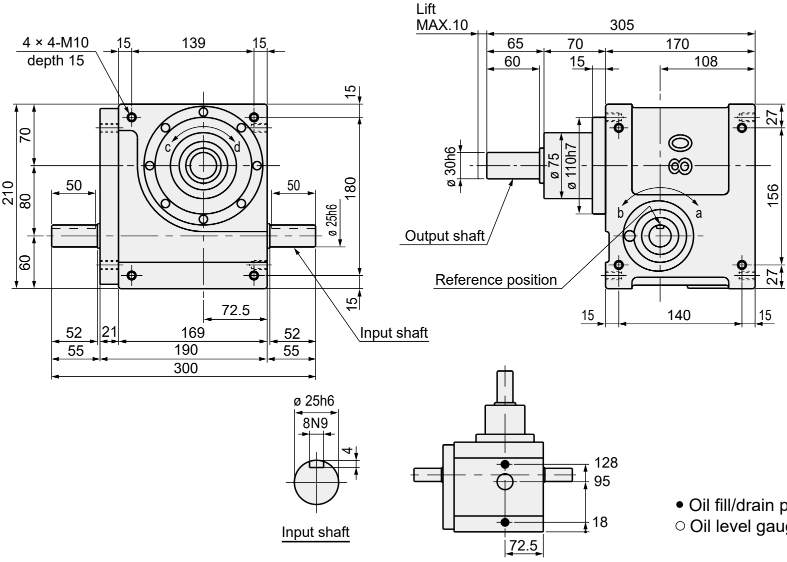

- ● Oil fill/drain port (Rc3/8)
- ○ Oil level gauge (ø 30)

Characteristics

Descriptions	Characteristics	
	Output shaft	Input shaft
Allowable thrust force N	*	1300
Allowable radial force N	270	1700
Allowable bending moment N·m	40	-
Torsion rigidity (K) N·m/rad	40000	-
Moment of inertia kg·m^2	5.31 × 10^{-3}	5.01 × 10^{-3}

* Allowable output shaft thrust force is defined in the following formula.
Output shaft allowable thrust force = (allowable payload - max. payload) × 9.81 (N)

Descriptions	Characteristics
Internal frictional torque (Tin) N·m	10
Output shaft inner weight (mo) kg	1.6
Product weight kg	32
Oil level ℓ	1.8
Paint color	Silver

Accuracy

Descriptions	Swing direction	Descriptions	Lift direction
	Index		
Indexing accuracy " (sec.)	±30	Stroke accuracy mm	±0.1
Repeatability " (sec.)	20	Repeatability mm	±0.02
Dwell accuracy " (sec.)	30 (60)		

Value in parentheses ( ) is when the dwell angle exceeds 90 degrees.

Output torque table

Index P&P

PPIM080 Cam curve/MS												
Index number *n*	Index angle *θh* (°)	Static rated output torque (N·m)	Dynamic rated output torque *Tr* (N·m)									
			Input shaft rotational speed *N* (rpm)									
			60	90	120	150	200	250	300	400	500	600
4	160	163.0	62.5	53.0	46.9	42.4	36.6	31.9	27.6	19.5		
	180	163.0	67.7	57.6	51.1	46.4	40.4	35.7	31.6	24.2	16.9	
6	120	64.8	31.3	26.3	23.0	20.4	16.7					
	150	85.8	50.0	42.5	37.6	34.0	29.4	25.7	22.4	16.1		
	180	85.8	54.7	46.5	41.3	37.6	32.9	29.3	26.2	20.7	15.4	
8	80	116.0	52.8	44.4	38.8	34.3	28.1	22.4	16.8			
	90	163.0	65.5	55.4	48.8	43.7	37.1	31.3	25.9	15.0		
	120	163.0	77.6	65.9	58.5	53.1	46.3	41.0	36.3	27.9	19.6	
	150	176.0	143	130	116	106	94.2	85.4	78.4	67.1	57.7	49.1
	180	256.0	188	161	143	131	117	106	98.2	85.8	76.0	67.5
12	60	64.8	30.1	24.9	21.1	18.0						
	90	85.8	52.9	44.8	39.6	35.6	30.5	26.2	22.2			
	120	116.0	79.1	67.4	59.9	54.6	48.0	43.0	38.9	31.7	25.1	18.5
	150	116.0	84.6	72.1	64.2	58.7	51.9	47.0	43.0	36.5	30.9	25.6
	180	163.0	99.3	85.9	76.7	70.1	62.4	56.7	52.3	45.4	39.8	34.9
16	90	68.4	42.7	36.2	32.0	28.8	24.8	21.4	18.3			
	120	90.6	65.4	55.7	49.6	45.2	39.8	35.8	32.4	26.7	21.5	16.3
	150	90.6	68.3	58.9	52.5	48.0	42.5	38.5	35.3	30.1	25.6	21.5
	180	90.6	69.7	61.1	54.5	49.9	44.3	40.3	37.1	32.2	28.2	24.6

Payload table

PPIM080 Cam curve/MS											
Lift *Lo* (mm)	Index angle *θh* (°)	Rated dynamic payload *Mm* (kg)									
		Input shaft rotational speed *N* (rpm)									
		60	90	120	150	200	250	300	400	500	600
4	31	20.0	20.0	20.0	20.0	12.8	8.4	5.7	2.8	1.3	0.4
	50	20.0	20.0	20.0	20.0	20.0	20.0	15.4	9.1	5.7	3.6
	70	20.0	20.0	20.0	20.0	20.0	20.0	20.0	17.4	11.8	8.3
	90	20.0	20.0	20.0	20.0	20.0	20.0	20.0	20.0	18.7	13.7
	120	20.0	20.0	20.0	20.0	20.0	20.0	20.0	20.0	20.0	20.0
6	37	20.0	20.0	20.0	19.5	12.1	7.9	5.3	2.5	1.1	0.3
	50	20.0	20.0	20.0	20.0	20.0	14.5	10.4	5.8	3.3	1.9
	70	20.0	20.0	20.0	20.0	20.0	20.0	19.5	11.9	7.7	5.2
	90	20.0	20.0	20.0	20.0	20.0	20.0	20.0	18.9	13.0	9.2
	120	20.0	20.0	20.0	20.0	20.0	20.0	20.0	20.0	20.0	16.1
8	43	20.0	20.0	20.0	19.6	12.2	8.0	5.4	2.6	1.1	0.3
	60	20.0	20.0	20.0	20.0	20.0	15.5	11.3	6.3	3.7	2.2
	75	20.0	20.0	20.0	20.0	20.0	20.0	17.1	10.3	6.5	4.3
	90	20.0	20.0	20.0	20.0	20.0	20.0	20.0	14.6	9.7	6.7
	120	20.0	20.0	20.0	20.0	20.0	20.0	20.0	20.0	16.9	12.3
10	47	20.0	20.0	20.0	18.8	11.6	7.5	5.1	2.3	1.0	0.2
	60	20.0	20.0	20.0	20.0	18.2	12.6	8.9	4.8	2.6	1.4
	75	20.0	20.0	20.0	20.0	20.0	18.8	13.9	8.1	5.0	3.1
	90	20.0	20.0	20.0	20.0	20.0	20.0	19.3	11.8	7.6	5.1
	120	20.0	20.0	20.0	20.0	20.0	20.0	19.3	20.0	13.8	9.8

Dimensions

CAD

● Body

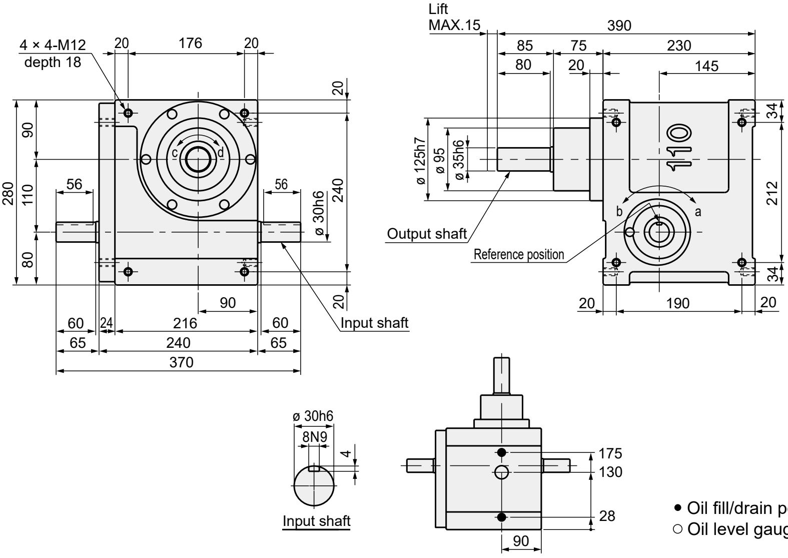

- ● Oil fill/drain port (Rc3/8)
- ○ Oil level gauge (ø 30)

Characteristics

Descriptions		Characteristics	
		Output shaft	Input shaft
Allowable thrust force	N	*	2800
Allowable radial force	N	300	3400
Allowable bending moment	N·m	50	-
Torsion rigidity (K)	N·m/rad	60000	-
Moment of inertia	kg·m^2	1.6 × 10^{-2}	1.2 × 10^{-2}

* Allowable output shaft thrust force is defined in the following formula.
Output shaft allowable thrust force = (allowable payload - max. payload) × 9.81 (N)

Descriptions		Characteristics
Internal frictional torque (Tin)	N·m	15
Output shaft inner weight (mo)	kg	2.9
Product weight	kg	68
Oil level	ℓ	4.0
Paint color		Silver

Accuracy

Descriptions		Swing direction	Descriptions		Lift direction
		Index			
Indexing accuracy	" (sec.)	±30	Stroke accuracy	mm	±0.1
Repeatability	" (sec.)	20	Repeatability	mm	±0.02
Dwell accuracy	" (sec.)	30 (60)			

Value in parentheses ( ) is when the dwell angle exceeds 90 degrees.

Output torque table

PPIM110 Cam curve/MS

Index number *n*	Index angle *θh* (°)	Static rated output torque (N·m)	Dynamic rated output torque *Tr* (N·m)									
			Input shaft rotational speed *N* (rpm)									
			60	90	120	150	200	250	300	400	500	600
4	150	235	137.0	125.0	110.0	98.6	83.7	71.0	59.1	35.1		
	180	346	193.0	164.0	145.0	132.0	115.0	101.0	89.3	67.5	45.9	23.2
6	100	151	71.1	59.0	50.4	43.1	31.9	20.6				
	120	151	80.3	67.4	58.6	51.6	41.5	32.0	22.5			
	150	211	104.0	87.9	77.5	69.6	59.3	50.5	42.3	26.1		
	180	211	113.0	95.6	84.7	76.7	66.5	58.3	51.1	37.4	23.7	
8	75	235	132.0	119.0	103.0	90.4	72.0	54.5	36.6			
	90	374	237.0	201.0	177.0	160.0	137.0	117.0	99.4	64.3	27.0	
	120	374	278.0	237.0	210.0	191.0	167.0	149.0	133.0	105.0	78.5	51.0
	150	616	357.0	304.0	271.0	247.0	219.0	198.0	181.0	153.0	128.0	105.0
	180	616	380.0	324.0	289.0	264.0	235.0	213.0	196.0	169.0	147.0	127.0
12	60	211	88.1	72.9	61.8	52.4	37.6	22.5				
	90	211	109.0	91.8	80.6	72.0	60.2	49.9	39.9			
	120	235	203.0	185.0	165.0	150.0	132.0	118.0	106.0	85.4	66.3	47.0
	150	235	216.0	197.0	176.0	160.0	142.0	128.0	117.0	98.6	82.7	67.6
	180	346	274.0	237.0	212.0	194.0	172.0	156.0	144.0	125.0	109.0	95.0
16	90	151	104.0	88.0	77.5	69.6	59.2	50.3	41.9	25.2		
	120	151	112.0	95.2	84.4	76.6	66.7	58.9	52.1	39.7	27.4	
	150	211	132.0	114.0	101.0	92.3	81.4	73.2	66.4	54.9	44.6	34.5
	180	211	134.0	117.0	104.0	95.4	84.5	76.5	70.0	59.5	50.6	42.2

Payload table

PPIM110 Cam curve/MS

Lift *Lo* (mm)	Index angle *θh* (°)	Rated dynamic payload *Mm* (kg)									
		Input shaft rotational speed *N* (rpm)									
		60	90	120	150	200	250	300	400	500	600
4	22	30.0	30.0	20.0	13.2	7.0	3.6	1.7			
	50	30.0	30.0	30.0	30.0	30.0	25.4	18.6	10.5	6.1	3.4
	70	30.0	30.0	30.0	30.0	30.0	30.0	30.0	21.1	13.9	9.3
	90	30.0	30.0	30.0	30.0	30.0	30.0	30.0	30.0	22.8	16.4
	120	30.0	30.0	30.0	30.0	30.0	30.0	30.0	30.0	30.0	27.9
6	27	30.0	30.0	20.0	13.3	7.0	3.6	1.7			
	50	30.0	30.0	30.0	30.0	25.6	17.6	12.3	6.2	3.1	1.2
	70	30.0	30.0	30.0	30.0	30.0	30.0	23.8	14.1	8.7	5.4
	90	30.0	30.0	30.0	30.0	30.0	30.0	30.0	23.1	15.4	10.5
	120	30.0	30.0	30.0	30.0	30.0	30.0	30.0	30.0	26.5	19.4
8	31	30.0	30.0	19.7	13.1	6.8	3.6	1.6			
	50	30.0	30.0	30.0	30.0	19.9	13.1	8.8	4.0	1.5	0.1
	70	30.0	30.0	30.0	30.0	30.0	25.0	18.3	10.3	5.9	3.3
	90	30.0	30.0	30.0	30.0	30.0	30.0	28.6	17.6	11.3	7.3
	120	30.0	30.0	30.0	30.0	30.0	30.0	30.0	29.5	20.5	14.5
10	34	30.0	29.6	18.9	12.5	6.5	3.3	1.4			
	60	30.0	30.0	30.0	30.0	22.6	15.2	10.4	5.0	2.2	0.6
	90	30.0	30.0	30.0	30.0	30.0	30.0	23.7	14.0	8.6	5.3
	120	30.0	30.0	30.0	30.0	30.0	30.0	30.0	24.5	16.5	11.3
12	37	30.0	29.2	18.6	12.2	6.3	3.2	1.3			
	60	30.0	30.0	30.0	30.0	19.1	12.5	8.3	3.7	1.3	
	90	30.0	30.0	30.0	30.0	30.0	27.1	20.1	11.5	6.8	3.9
	120	30.0	30.0	30.0	30.0	30.0	30.0	30.0	20.8	13.6	9.1
15	41	30.0	28.6	18.2	11.9	6.1	3.0	1.2			
	60	30.0	30.0	30.0	25.1	15.3	9.6	6.2	2.3	0.4	
	90	30.0	30.0	30.0	30.0	30.0	22.3	16.1	8.8	4.9	2.5
	120	30.0	30.0	30.0	30.0	30.0	30.0	27.4	16.7	10.6	6.8

Circular P&P drive high speed

PPIH/PPOH Series

● Shaft interval: 40, 50, 63 and 80 mm

Specifications

		Descriptions	PPIH040/PPOH040						PPIH050/PPOH050						PPIH063/PPOH063							PPIH080/PPOH080						
Swing direction	Index specifications	Index number Note 1	2	3	4	6	8	12	2	3	4	6	8	12	2	3	4	6	8	12	16	2	3	4	6	8	12	16
		Min. index angle °	210	150	90	75	60	60	210	150	90	75	60	45	210	150	90	75	60	45	90	210	150	105	75	60	45	90
		Indexing accuracy " (sec.)	±120												±90													
		Repeatability " (sec.)	30																									
		Dwell accuracy " (sec.)	60																									
		Cam curve	MS curve (standard), MC curve, MT curve, Trapecloid curve																									

		Descriptions	PPIH040/PPOH040				PPIH050/PPOH050				PPIH063/PPOH063				PPIH080/PPOH080			
Swing direction	Oscillator specifications	Oscillating angle °	30	45	60	90	30	45	60	90	30	45	60	90	30	45	60	90
		Min. index angle °	45	60	75	90	45	60	75	90	45	60	75	90	45	60	75	105
		Indexing accuracy " (sec.)	±120															
		Repeatability " (sec.)	30															
		Dwell accuracy " (sec.)	60															
		Cam curve	MS curve (standard), MC curve, MT curve, Trapecloid curve															

	Descriptions	PPIH040/PPOH040				PPIH050/PPOH050					PPIH063/PPOH063						PPIH080/PPOH080				
Lift direction	Lift range (mm)	5 to 18				5 to 25					5 to 30						5 to 40				
	Standard lift mm	5	10	15	18	5	10	15	20	25	5	10	15	20	25	30	5	10	20	30	40
	Min. index angle °	17	25	30	35	17	24	29	34	38	16	23	28	32	36	39	16	23	32	39	45
	Stroke accuracy mm	±0.1	±0.2			±0.1	±0.2				±0.1	±0.2					±0.1	±0.2			±0.3
	Repeatability mm	±0.02																			
	Cam curve	MS curve																			

Descriptions	PPIH040/PPOH040	PPIH050/PPOH050	PPIH063/PPOH063	PPIH080/PPOH080
Input shaft rotational speed rpm	max.600			
Product weight kg	12	21	36	67
Oil level ℓ	0.6	1.2	2.0	4.0
Paint color	Silver			

Note 1. For specifications whose index number exceeds 12 or 16, contact CKD.
Note 2. For details of accuracy, refer to the page B-30.

How to order

PPIH	063	-	006	010	S	L	S	1	-	X012345
Ⓐ	Ⓑ		Ⓒ	Ⓓ	Ⓔ	Ⓕ	Ⓖ	Ⓗ		Ⓘ

Ⓐ Model No.	Ⓑ Shaft interval		Ⓒ Index number (n) and oscillating angle (ψ)				Ⓓ Lift (Lo)		Ⓔ Cam curve		Ⓕ Spiral direction of the cam and orbit pattern	
			PPIH Index number (n)		PPOH Oscillating angle (ψ)						PPIH (spiral direction of the cam)	
PPIH Index P&P Motion	040	40 mm	002	2	090	90°	005 to 040	5 mm to 40 mm	S	MS curve (standard)	L	Left helix (standard) 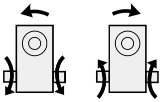
	050	50 mm	003	3	060	60°			C	MCcurve (MCV50)	R	Right helix 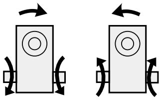
PPOH Oscillator P & P Motion	063	63 mm	004	4	045	45°			T	MT curve		
	080	80 mm	006	6	030	30°			P	Trapecloid curve		
			008	8					*	This indicates the cam curve for the swing direction. When there are more than 1 cam curve, this will be "x".		
			012	12								
			016	16								

			Ⓖ Shape of the output shaft		Ⓗ Installation position		Ⓘ Special specification No.
PPOH (orbit pattern)			S	Straight (without keyway) * For the following specifications, contact CKD. • With Torque saver	1	Position 1 Output shaft facing upward * For the position other than #1, contact CKD.	* To place an order for a P&P drive, "Special specification number" is required. The special specification model number shall be determined after a consultation with the customer. Mounting options are available upon request. Please provide CKD with the specifications.
	T	Standard When the input shaft starts to rotate from the rotation reference point, the output shaft rotates in sequence from 1 and 2 as in the figure. 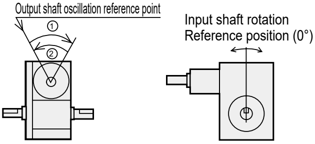					
	S	Option 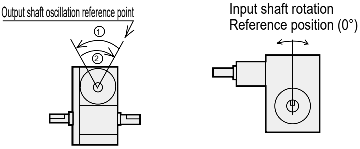					

Dimensions

● Body

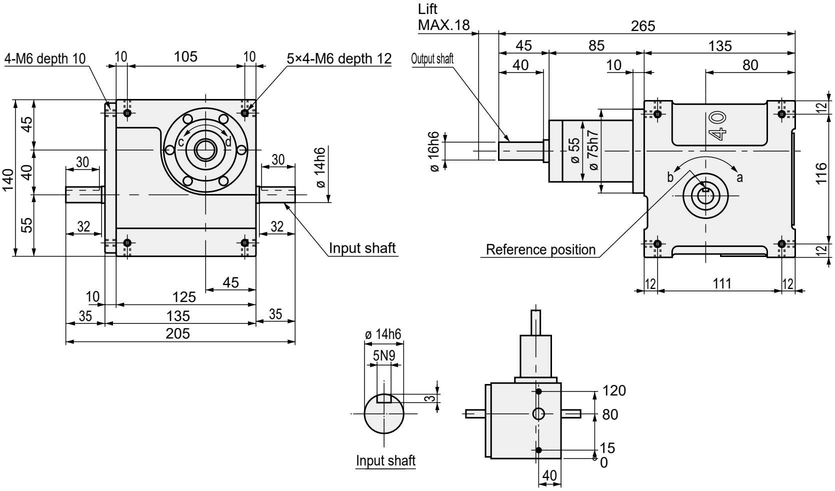

● Oil fill/drain port (Rc1/4)
○ Oil level gauge (ø 20)

Characteristics

Descriptions	Characteristics	
	Output shaft	Input shaft
Allowable thrust force N	*	800
Allowable radial force N	100	750
Allowable bending moment N·m	8	-
Torsion rigidity (K) N·m/rad	1200	-
Moment of inertia kg·m^2	1.32×10^{-4}	6.66×10^{-4}

* Allowable output shaft thrust force is defined in the following formula.
Output shaft allowable thrust force = (allowable payload - max. payload) × 9.81 (N)

Descriptions	Characteristics
Internal frictional torque (Tin) N·m	5
Output shaft inner weight (mo) kg	0.4
Product weight kg	12
Oil level ℓ	0.6
Paint color	Silver

Accuracy

Descriptions	Swing direction	
	Index	Oscillator
Indexing accuracy " (sec.)	±120	±120
Repeatability " (sec.)	30	30
Dwell accuracy " (sec.)	60	60

Descriptions	Lift direction
Stroke accuracy mm	*
Repeatability mm	±0.02

* Lift value 6 or less: ±0.1
Over 6 to 18: ±0.2

Output torque table

Index P&P

PPIH040 Cam curve/MS

Index number *n*	Index angle *θh* (°)	Static rated output torque (N·m)	Dynamic rated output torque *Tr* (N·m)									
			Input shaft rotational speed *N* (rpm)									
			30	60	90	120	150	200	300	400	500	600
2	210	14.7	7.1	6.4	5.5	4.9	4.4	3.9	3.3	2.8	2.3	2.0
	240	14.7	7.6	6.9	5.9	5.2	4.8	4.3	3.6	3.1	2.7	2.3
3	150	14.7	7.3	6.5	5.6	5.0	4.5	4.0	3.3	2.7	2.3	
	180	14.7	8.0	7.2	6.1	5.5	5.0	4.4	3.7	3.2	2.7	2.3
4	90	5.8	3.6	3.2	2.7	2.4	2.1					
	120	5.8	4.3	3.8	3.2	2.9	2.6	2.3				
	180	14.7	8.7	8.0	6.8	6.1	5.5	4.9	4.1	3.6	3.2	2.8
6	75	14.7	7.1	6.3	5.4	4.8	4.3	3.8	2.9	2.2		
	120	14.7	8.7	7.8	6.7	5.9	5.4	4.8	4.0	3.4	2.9	2.5
	180	14.7	9.4	8.8	7.5	6.7	6.1	5.4	4.6	4.0	3.6	3.3
8	60	5.8	4.1	3.7	3.1	2.7	2.4	2.1				
	90	14.7	8.7	7.7	6.6	5.9	5.3	4.7	3.9	3.3	2.7	2.2
	150	14.7	9.5	8.8	7.5	6.7	6.2	5.5	4.6	4.1	3.6	3.3
12	60	4.0	3.4	3.0	2.5	2.2	2.0					
	90	5.8	5.3	4.8	4.1	3.7	3.3	2.9	2.4	2.0		
	150	5.8	5.6	5.3	4.5	4.0	3.7	3.3	2.8	2.4	2.2	

Output torque table

Oscillator P&P

PPOH040 Cam curve/MS

Oscillating angle *ψ* (°)	Index angle *θh* (°)	Static rated output torque (N·m)	Dynamic rated output torque *Tr* (N·m)									
			Input shaft rotational speed *N* (rpm)									
			30	60	90	120	150	200	300	400	500	600
30	45	11.8	5.5	4.2	3.5	3.1	2.8	2.4				
	60	14.7	8.1	6.1	5.2	4.6	4.2	3.7	2.9	2.3		
	90	14.7	8.9	6.9	5.9	5.2	4.8	4.2	3.5	3.0	2.6	2.2
45	60	14.7	6.9	5.2	4.4	3.9	3.6	3.1	3.3			
	90	14.7	8.2	6.3	5.3	4.8	4.3	3.8	3.1	2.6	2.1	
	120	14.7	8.8	6.8	5.8	5.2	4.7	4.2	3.5	3.0	2.6	2.3
60	75	14.7	6.7	5.1	4.4	3.9	3.5	3.0	2.3			
	90	14.7	7.4	5.6	4.8	4.3	3.9	3.4	2.7	2.2		
	120	14.7	8.2	6.3	5.4	4.8	4.4	3.9	3.2	2.7	2.3	
90	90	14.7	6.0	4.6	3.9	3.4	3.1	2.7	2.0			
	120	14.7	7.1	5.4	4.6	4.1	3.7	3.3	2.6	2.1		
	150	14.7	7.8	6.0	5.1	4.6	4.2	3.7	3.1	2.6	2.2	

Payload table

PPIH/PPOH040 Cam curve/MS

Lift *Lo* (mm)	Index angle *θh* (°)	Rated dynamic payload *Mm* (kg)									
		Input shaft rotational speed *N* (rpm)									
		30	60	90	120	150	200	300	400	500	600
5	17	3.3	1.2	0.4	0.1						
	60	5.0	5.0	4.3	3.4	2.6	1.7	0.7	0.2		
	120	5.0	5.0	5.0	5.0	5.0	4.3	2.8	1.8	1.2	0.8
10	25	3.2	1.1	0.4	0.1						
	65	5.0	4.4	3.2	2.3	1.6	0.9	0.2			
	120	5.0	5.0	5.0	4.6	3.9	2.9	1.6	0.8	0.4	0.2
15	30	2.8	0.9	0.3							
	70	5.0	3.9	2.7	1.8	1.2	0.6	0.1			
	120	5.0	5.0	4.6	3.8	3.0	2.1	1.0	0.4	0.1	
18	35	2.9	1.0	0.3							
	70	5.0	3.4	2.3	1.4	0.9	0.4				
	120	5.0	5.0	4.3	3.4	2.6	1.7	0.7	0.3		

Product specifications
Compact
Standard
Table
Wide angle
Basic
Roller gear cam drive
Parallel cam drive
Circular
Linear
Pick and Place drive
Option

Dimensions

CAD

● Body

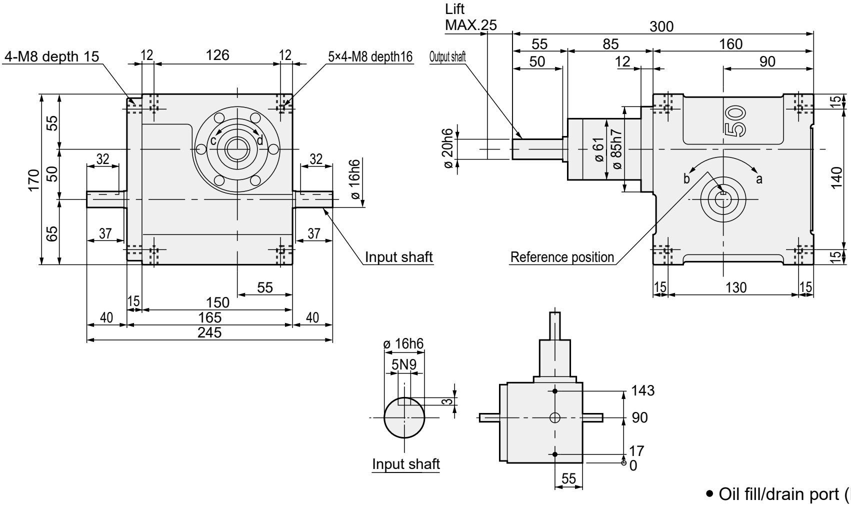

● Oil fill/drain port (Rc1/4)
○ Oil level gauge (ø 20)

Characteristics

Descriptions		Characteristics	
		Output shaft	Input shaft
Allowable thrust force	N	*	1200
Allowable radial force	N	120	900
Allowable bending moment	N·m	10	-
Torsion rigidity (K)	N·m/rad	4200	-
Moment of inertia	kg·m^2	5.14 × 10^{-4}	1.75 × 10^{-3}

* Allowable output shaft thrust force is defined in the following formula.
Output shaft allowable thrust force = (allowable payload - max. payload) × 9.81 (N)

Descriptions		Characteristics
Internal frictional torque (Tin)	N·m	7
Output shaft inner weight (mo)	kg	0.8
Product weight	kg	21
Oil level	ℓ	1.2
Paint color		Silver

Accuracy

Descriptions		Swing direction	
		Index	Oscillator
Indexing accuracy	" (sec.)	±120	±120
Repeatability	" (sec.)	30	30
Dwell accuracy	" (sec.)	60	60

Descriptions		Lift direction
Stroke accuracy	mm	*
Repeatability	mm	±0.02

* Lift value 6 or less: ±0.1
Over 6 to 25: ±0.2

Output torque table

Index P&P

PPIH050 Cam curve/MS												
Index number *n*	Index angle *θh* (°)	Static rated output torque (N·m)	Dynamic rated output torque *Tr* (N·m)									
			Input shaft rotational speed *N* (rpm)									
			30	60	90	120	150	200	300	400	500	600
2	210	30.9	16.7	15.0	12.8	11.4	10.3	9.1	7.4	6.0	4.8	3.6
	240	30.9	17.9	16.3	13.9	12.3	11.3	10.0	8.2	6.9	5.8	4.7
3	150	30.9	17.3	15.4	13.1	11.6	10.6	9.3	7.4	5.9	4.4	
	180	30.9	18.9	17.0	14.5	12.9	11.8	10.4	8.5	7.1	5.9	4.6
4	90	14.6	6.1	5.3	4.5	3.8	3.3					
	120	18.7	9.4	8.3	7.1	6.2	5.6	4.8	3.5			
	180	30.9	20.9	19.1	16.3	14.6	13.3	11.8	9.8	8.4	7.2	6.1
6	75	30.9	16.7	14.8	12.6	11.1	10.0	8.6	6.3	4.2		
	120	30.9	20.9	18.8	16.0	14.3	13.0	11.5	9.4	7.8	6.4	5.1
	180	30.9	22.9	21.3	18.2	16.2	14.9	13.2	11.1	9.7	8.5	7.5
8	60	18.7	9.1	8.0	6.8	5.9	5.2	4.2				
	90	30.9	20.9	18.5	15.8	14.0	12.8	11.2	9.1	7.3	5.7	4.1
	150	30.9	23.3	21.6	18.4	16.4	15.0	13.4	11.2	9.8	8.6	7.6
12	45	7.1	5.3	4.6	3.8	3.2						
	90	14.6	8.9	8.1	6.8	6.1	5.5	4.8	3.7			
	150	18.7	12.4	11.7	10.0	8.9	8.2	7.3	6.1	5.2	4.6	4.0

Output torque table

Oscillator P&P

PPOH050 Cam curve/MS												
Oscillating angle *ψ* (°)	Index angle *θh* (°)	Static rated output torque (N·m)	Dynamic rated output torque *Tr* (N·m)									
			Input shaft rotational speed *N* (rpm)									
			30	60	90	120	150	200	300	400	500	600
30	45	18.7	9.0	6.8	5.7	4.9	4.2	3.3				
	60	30.9	19.4	14.8	12.5	11.1	10.0	8.7	6.6	4.8		
	90	30.9	21.7	16.8	14.3	12.7	11.6	10.3	8.4	7.0	5.8	4.5
45	60	18.7	8.6	6.5	5.5	4.7	4.1	3.3				
	90	30.9	19.8	15.0	12.8	11.4	10.3	9.1	7.2	5.7	4.2	
	120	30.9	21.3	16.6	14.1	12.6	11.5	10.2	8.4	7.1	5.9	4.8
60	75	30.9	15.9	12.0	10.2	9.0	8.1	6.8	4.8			
	90	30.9	17.6	13.4	11.4	10.1	9.1	7.9	6.0	4.4		
	120	30.9	19.8	15.3	13.0	11.6	10.5	9.3	7.5	6.1	4.9	3.6
90	90	18.7	7.5	5.6	4.7	4.1	3.6					
	120	30.9	16.8	12.8	10.9	9.6	8.7	7.6	5.9	4.4		
	150	30.9	18.7	14.4	12.2	10.9	9.9	8.7	7.1	5.8	4.6	3.4

Payload table

PPIH/PPOH050 Cam curve/MS											
Lift *Lo* (mm)	Index angle *θh* (°)	Rated dynamic payload *Mm* (kg)									
		Input shaft rotational speed *N* (rpm)									
		30	60	90	120	150	200	300	400	500	600
5	17	6.9	2.4	0.9	0.2						
	60	10.0	10.0	8.6	6.8	5.3	3.4	1.4	0.5	0.1	
	120	10.0	10.0	10.0	10.0	10.0	8.6	5.7	3.8	2.5	1.6
10	24	6.3	2.2	0.8	0.1						
	65	10.0	8.9	6.6	4.7	3.4	1.9	0.5			
	120	10.0	10.0	10.0	9.2	7.9	5.9	3.2	1.7	0.9	0.4
15	29	5.7	1.9	0.6							
	70	10.0	7.9	5.5	3.7	2.5	1.3	0.2			
	120	10.0	10.0	9.4	7.7	6.2	4.3	2.0	0.9	0.3	
20	34	5.4	1.8	0.5							
	70	10.0	6.7	4.3	2.7	1.7	0.7				
	120	10.0	10.0	8.3	6.5	5.0	3.2	1.3	0.5		
25	38	5.0	1.6	0.4							
	70	9.7	5.6	3.3	2.0	1.1	0.3				
	120	10.0	9.4	7.3	5.5	4.1	2.5	0.9	0.2		

Dimensions

● Body

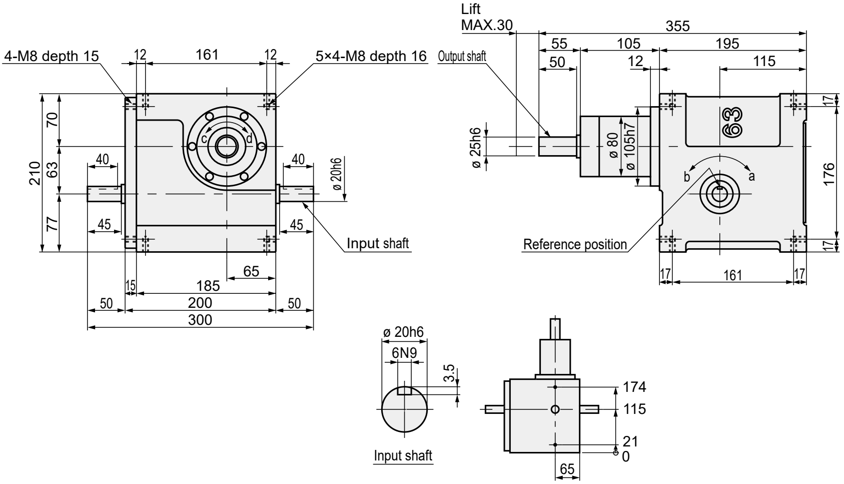

● Oil fill/drain port (Rc1/4)
○ Oil level gauge (ø 20)

Characteristics

Descriptions	Characteristics	
	Output shaft	Input shaft
Allowable thrust force N	*	2000
Allowable radial force N	200	1600
Allowable bending moment N·m	25	-
Torsion rigidity (K) N·m/rad	10000	-
Moment of inertia kg·m²	9.41×10^{-4}	5.62×10^{-3}

* Allowable output shaft thrust force is defined in the following formula.
Output shaft allowable thrust force = (allowable payload - max. payload) × 9.81 (N)

Descriptions	Characteristics
Internal frictional torque (Tin) N·m	10
Output shaft inner weight (mo) kg	1.6
Product weight kg	36
Oil level ℓ	2.0
Paint color	Silver

Accuracy

Descriptions	Swing direction		Descriptions	Lift direction
	Index	Oscillator		
Indexing accuracy " (sec.)	±90	±120	Stroke accuracy mm	*
Repeatability " (sec.)	30	30	Repeatability mm	±0.02
Dwell accuracy " (sec.)	60	60		

* Lift value 6 or less: ±0.1
Over 6 to 30: ±0.2

Output torque table

Index P&P

PPIH063 Cam curve/MS

Index number *n*	Index angle *θh* (°)	Static rated output torque (N·m)	Dynamic rated output torque *Tr* (N·m)									
			Input shaft rotational speed *N* (rpm)									
			30	60	90	120	150	200	300	400	500	600
2	210	51.5	29.3	26.3	22.4	19.9	18.1	15.9	12.9	10.4	8.2	5.9
	240	51.5	31.3	28.4	24.2	21.6	19.7	17.4	14.3	12.0	9.9	7.9
3	150	51.5	30.3	26.9	22.9	20.3	18.5	16.2	12.8	10.1	7.4	
	180	51.5	32.9	29.7	25.3	22.5	20.5	18.1	14.8	12.3	10.0	7.8
4	90	23.3	9.9	8.7	7.3	6.2	5.4					
	120	37.9	22.2	19.7	16.7	14.8	13.4	11.6	8.7	6.2		
	180	51.5	36.3	33.2	28.3	25.2	23.0	20.4	16.9	14.4	12.3	10.3
6	75	51.5	29.3	26.0	22.0	19.4	17.5	14.9	10.8	6.9		
	120	51.5	36.3	32.6	27.7	24.7	22.5	19.8	16.2	13.4	10.9	8.4
	180	51.5	39.5	36.7	31.3	28.0	25.6	22.7	19.1	16.6	14.6	12.8
8	60	37.9	21.5	19.0	16.0	14.0	12.5	10.4	6.6			
	90	51.5	36.2	32.1	27.3	24.3	22.1	19.4	15.5	12.5	9.5	6.6
	150	51.5	40.0	37.1	31.7	28.3	25.8	23.0	19.2	16.7	14.6	12.8
12	45	18.7	9.1	8.0	6.6	5.5						
	90	23.3	14.8	13.3	11.3	10.0	9.1	7.9	6.1			
	150	37.9	29.7	28.1	23.9	21.4	19.5	17.4	14.6	12.7	11.2	9.9
16	90	18.7	11.7	10.7	9.1	8.1	7.3	6.4				
	120	18.7	12.0	11.2	9.5	8.5	7.7	6.8	5.5			
	180	18.7	12.1	11.5	10.0	9.0	8.2	7.3	6.1	5.3		

Output torque table

Oscillator P&P

PPOH063 Cam curve/MS

Oscillating angle *ψ* (°)	Index angle *θh* (°)	Static rated output torque (N·m)	Dynamic rated output torque *Tr* (N·m)									
			Input shaft rotational speed *N* (rpm)									
			30	60	90	120	150	200	300	400	500	600
30	45	37.9	21.3	16.1	13.5	11.7	10.3	8.2				
	90	51.5	37.4	28.9	24.6	21.9	20.0	17.6	14.4	11.9	9.6	7.4
	120	51.5	38.6	30.7	26.1	23.3	21.3	18.9	15.8	13.6	11.7	10.1
45	60	51.5	28.4	21.6	18.2	16.0	14.3	12.0	7.9			
	90	51.5	34.2	26.1	22.2	19.7	17.9	15.6	12.3	9.6	6.9	
	120	51.5	36.7	28.6	24.3	21.7	19.8	17.5	14.4	12.0	10.0	8.0
60	75	51.5	27.8	21.1	17.8	15.7	14.1	11.9	8.2			
	90	51.5	30.7	23.3	19.8	17.5	15.8	13.7	10.3	7.3		
	120	51.5	34.4	26.4	22.5	20.0	18.2	16.0	12.9	10.5	8.2	5.9
90	90	51.5	24.5	18.6	15.7	13.8	12.3	10.3	6.7			
	120	51.5	29.4	22.3	19.0	16.8	15.2	13.2	10.1	7.4		
	150	51.5	32.5	25.0	21.3	18.9	17.2	15.1	12.2	9.9	7.7	5.5

Payload table

PPIH/PPOH063 Cam curve/MS

Lift *Lo* (mm)	Index angle *θh* (°)	Rated dynamic payload *Mm* (kg)									
		Input shaft rotational speed *N* (rpm)									
		30	60	90	120	150	200	300	400	500	600
5	16	12.3	4.0	1.3	0.1						
	60	20.0	19.6	16.1	12.7	9.8	6.4	2.6	0.9		
	120	20.0	20.0	20.0	20.0	19.4	16.1	10.7	7.0	4.5	2.9
10	23	11.8	3.9	1.2	0.1						
	65	20.0	16.8	12.4	8.9	6.3	3.5	0.9			
	120	20.0	20.0	20.0	17.3	14.7	11.0	5.9	3.2	1.7	0.7
15	28	11.0	3.5	1.0							
	70	20.0	15.0	10.4	7.1	4.7	2.4	0.3			
	120	20.0	20.0	17.6	14.5	11.7	8.0	3.8	1.7	0.5	
20	32	10.3	3.2	0.8							
	70	20.0	12.9	8.3	5.2	3.3	1.4				
	120	20.0	19.2	15.7	12.3	9.5	6.1	2.5	0.8		
25	36	9.8	3.0	0.7							
	70	18.9	11.1	6.6	3.9	2.2	0.7				
	120	20.0	18.0	14.0	10.5	7.8	4.8	1.6	0.3		
30	39	9.0	2.6	0.5							
	70	17.5	9.5	5.3	2.9	1.5	0.2				
	120	20.0	16.7	12.5	9.1	6.5	3.7	1.0			

Dimensions

CAD

● Body

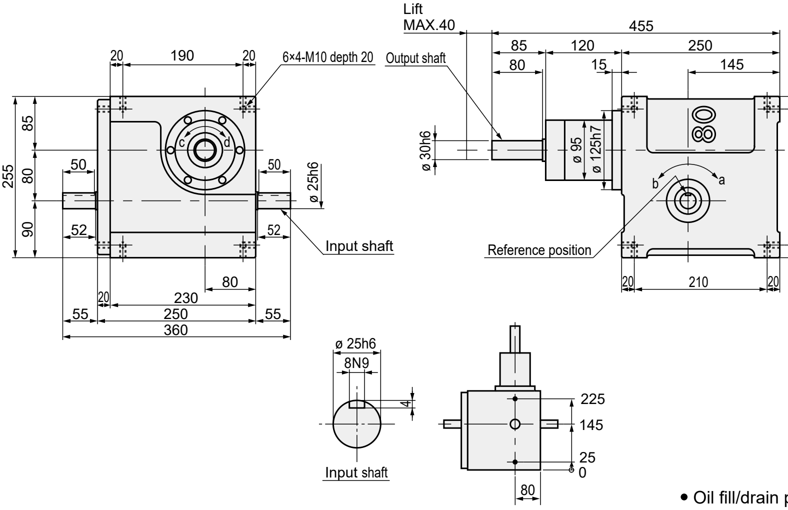

● Oil fill/drain port (Rc3/8)
○ Oil level gauge (ø 30)

Characteristics

Descriptions		Characteristics	
		Output shaft	Input shaft
Allowable thrust force	N	*	2500
Allowable radial force	N	300	2700
Allowable bending moment	N·m	40	-
Torsion rigidity (K)	N·m/rad	20000	-
Moment of inertia	kg·m^2	3.59 × 10^{-3}	1.64 × 10^{-2}

* Allowable output shaft thrust force is defined in the following formula.
Output shaft allowable thrust force = (allowable payload - max. payload) × 9.81 (N)

Descriptions		Characteristics
Internal frictional torque (Tin)	N·m	15
Output shaft inner weight (mo)	kg	2.9
Product weight	kg	67
Oil level	ℓ	4.0
Paint color		Silver

Accuracy

Descriptions		Swing direction	
		Index	Oscillator
Indexing accuracy	" (sec.)	±90	±120
Repeatability	" (sec.)	30	30
Dwell accuracy	" (sec.)	60	60

Descriptions		Lift direction
Stroke accuracy	mm	*
Repeatability	mm	±0.02

* Lift value 6 or less: ±0.1
more than 6 and 30 or less: ±0.2
more than 30 and 40 or less: ±0.3

Output torque table

Index P&P

PPIH080 Cam curve/MS

Index number *n*	Index angle: *θh* (°)	Static rated output torque (N·m)	Dynamic rated output torque *Tr* (N·m)									
			Input shaft rotational speed *N* (rpm)									
			30	60	90	120	150	200	300	400	500	600
2	210	129.0	56.5	50.6	43.0	38.1	34.5	29.9	22.9	16.8		
	240	129.0	60.9	55.3	47.0	41.8	38.0	33.2	26.4	20.7	15.3	
3	150	129.0	58.7	52.0	44.1	39.0	35.2	30.2	22.4	15.1		
	180	140.0	101.0	96.6	88.2	78.6	71.6	63.2	51.6	42.7	34.8	27.0
4	105	67.4	36.4	32.1	27.0	23.4	20.6	16.6				
	120	67.4	39.7	35.1	29.6	26.0	23.1	19.2				
	180	129.0	72.5	66.2	56.3	50.1	45.7	40.2	32.5	26.5	21.0	15.5
6	75	129.0	56.8	50.2	42.2	36.9	32.7	26.8	16.0			
	120	140.0	114.0	108.0	98.5	87.7	80.0	70.5	57.5	47.6	38.7	30.0
	180	140.0	126.0	124.0	114.0	101.0	92.7	82.4	69.2	60.1	52.9	46.6
8	60	91.5	51.2	45.1	37.8	32.8	28.7	22.8				
	90	129.0	72.2	64.0	54.3	48.1	43.5	37.6	28.6	20.5		
	150	140.0	129.0	126.0	115.0	103.0	94.0	83.5	70.0	60.8	53.3	46.8
12	45	26.8	18.7	17.1	15.7							
	90	67.4	52.3	47.0	40.0	35.4	32.1	27.8	21.4	15.7		
	150	67.4	55.4	52.3	44.6	39.8	36.3	32.1	26.6	22.6	19.1	15.8
16	90	26.8	25.4	24.4	23.4	22.6	21.9	20.7	18.3			
	120	26.8	26.0	25.7	24.7	23.9	23.3	22.4	20.7	18.0		
	180	26.8	26.4	26.4	26.1	25.4	24.9	24.1	22.8	20.7	18.2	15.9

Output torque table

Oscillator P&P

PPOH080 Cam curve/MS

Oscillating angle *ψ* (°)	Index angle: *θh* (°)	Static rated output torque (N·m)	Dynamic rated output torque *Tr* (N·m)									
			Input shaft rotational speed *N* (rpm)									
			30	60	90	120	150	200	300	400	500	600
30	45	67.4	38.2	28.6	23.6	19.9	16.6					
	90	140.0	126.0	105.0	89.2	79.4	72.4	63.9	52.1	43.2	35.2	27.4
	120	140.0	132.0	112.0	95.6	85.3	77.9	69.2	57.7	49.7	43.1	37.1
45	60	129.0	55.3	41.8	35.0	30.2	26.4	20.7				
	90	140.0	113.0	92.7	78.8	70.0	63.5	55.5	43.9	34.1	24.7	
	120	140.0	123.0	103.0	87.8	78.2	71.4	63.1	51.9	43.5	36.2	29.1
60	75	129.0	53.8	40.7	34.1	29.6	26.0	20.8				
	90	140.0	99.8	81.4	69.0	61.1	55.2	47.7	36.0	25.4		
	120	140.0	114.0	93.9	79.9	71.1	64.7	56.9	45.9	37.3	29.2	21.1
90	105	129.0	52.3	39.7	33.4	29.2	25.9	21.3				
	120	129.0	57.1	43.4	36.7	32.3	28.9	24.4	16.8			
	150	140.0	106.0	87.9	74.8	66.5	60.5	53.2	42.9	34.7	27.0	19.4

Payload table

PPIH/PPOH080 Cam curve/MS

Lift *Lo* (mm)	Index angle: *θh* (°)	Rated dynamic payload *Mm* (kg)									
		Input shaft rotational speed *N* (rpm)									
		30	60	90	120	150	200	300	400	500	600
5	16	25.9	9.6	3.6	0.9						
	60	30.0	30.0	30.0	28.3	22.1	14.6	6.5	2.7	0.8	
	120	30.0	30.0	30.0	30.0	30.0	30.0	24.0	15.9	10.6	7.1
10	23	25.2	9.4	3.5	0.9						
	65	30.0	30.0	27.8	20.1	14.5	8.4	2.7	0.4		
	120	30.0	30.0	30.0	30.0	30.0	24.6	13.7	7.7	4.3	2.3
20	32	22.7	8.1	2.8	0.5						
	70	30.0	29.3	19.1	12.3	8.0	3.8	0.2			
	120	30.0	30.0	30.0	27.8	21.6	14.2	6.2	2.6	0.7	
30	39	20.6	7.1	2.3	0.1						
	70	30.0	22.3	12.9	7.5	4.3	1.4				
	120	30.0	30.0	28.6	21.0	15.4	9.2	3.2	0.6		
40	45	18.8	6.3	1.8							
	75	30.0	19.0	10.4	5.6	2.9	0.5				
	120	30.0	30.0	23.4	16.2	11.2	6.1	1.5			

● MEMO

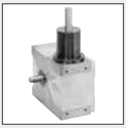

Circular P&P drive standard

PPIX/PPOX Series

● Difference between shafts: 50, 63, 80, 110, 140, 180 mm

Specifications

Descriptions			PPIX050/PPOX050					
Swing direction	Index specifications	Index number	2	3	4	6	8	
		Min. index angle °	120	90	60	45	35	
		Indexing accuracy	±120					
		Repeatability " (sec.)	30					
		Dwell accuracy " (sec.)	60					
		Cam curve " (sec.)	MS curve (standard), MC curve, MT curve, Trapecloid curve					
	Oscillator specifications	Oscillating angle °	30	45	60	90	120	180
		Min. index angle °	30	35	45	60	90	120
		Indexing accuracy " (sec.)	±120					
		Repeatability " (sec.)	30					
		Dwell accuracy " (sec.)	60					
		Cam curve	MS curve (standard), MC curve, MT curve, Trapecloid curve					
Lift direction		Lift range mm	5 to 18					
		Standard lift mm	5	10	15	18		
		Min. index angle °	24	33	40	44		
		Stroke accuracy mm	±0.1	±0.2				
		Repeatability mm	±0.05					
		Cam curve	MS curve					
Input shaft rotational speed[Note 1] rpm			max.120					
Product weight kg			8					
Oil level ℓ			0.3					
Paint color			Silver					

Descriptions			PPIX063/PPOX063					
Swing direction	Index specifications	Index number	2	3	4	6	8	
		Min. index angle °	120	90	60	45	35	
		Indexing accuracy	±120					
		Repeatability " (sec.)	30					
		Dwell accuracy " (sec.)	60					
		Cam curve " (sec.)	MS curve (standard), MC curve, MT curve, Trapecloid curve					
	Oscillator specifications	Oscillating angle °	30	45	60	90	120	180
		Min. index angle °	30	35	45	60	90	120
		Indexing accuracy " (sec.)	±120					
		Repeatability " (sec.)	30					
		Dwell accuracy " (sec.)	60					
		Cam curve	MS curve (standard), MC curve, MT curve, Trapecloid curve					
Lift direction		Lift range mm	5 to 25					
		Standard lift mm	5	10	15	20	25	
		Min. index angle °	20	28	35	40	45	
		Stroke accuracy mm	±0.1	±0.2				
		Repeatability mm	±0.05					
		Cam curve	MS curve					
Input shaft rotational speed[Note 1] rpm			max.120					
Product weight kg			15					
Oil level ℓ			0.5					
Paint color			Silver					

Descriptions			PPIX080/PPOX080					
Swing direction	Index specifications	Index number	2	3	4	6	8	
		Min. index angle °	120	90	60	45	35	
		Indexing accuracy	±120					
		Repeatability " (sec.)	30					
		Dwell accuracy " (sec.)	60					
		Cam curve " (sec.)	MS curve (standard), MC curve, MT curve, Trapecloid curve					
	Oscillator specifications	Oscillating angle °	30	45	60	90	120	180
		Min. index angle °	30	35	45	60	90	120
		Indexing accuracy " (sec.)	±120					
		Repeatability " (sec.)	30					
		Dwell accuracy " (sec.)	60					
		Cam curve	MS curve (standard), MC curve, MT curve, Trapecloid curve					
Lift direction		Lift range mm	5 to 30					
		Standard lift mm	5	10	15	20	25	30
		Min. index angle °	19	26	32	38	42	46
		Stroke accuracy mm	±0.1	±0.2				
		Repeatability mm	±0.05					
		Cam curve	MS curve					
Input shaft rotational speed[Note 1] rpm			max.120					
Product weight kg			25					
Oil level ℓ			1.0					
Paint color			Silver					

Descriptions			PPIX110/PPOX110					
Swing direction	Index specifications	Index number	2	3	4	6	8	
		Min. index angle °	120	90	60	45	35	
		Indexing accuracy " (sec.)	±120					
		Repeatability " (sec.)	30					
		Dwell accuracy " (sec.)	60					
		Cam curve	MS curve (standard), MC curve, MT curve, Trapecloid curve					
	Oscillator specifications	Oscillating angle °	30	45	60	90	120	180
		Min. index angle °	30	35	45	60	90	120
		Indexing accuracy " (sec.)	±120					
		Repeatability " (sec.)	30					
		Dwell accuracy " (sec.)	60					
		Cam curve	MS curve (standard), MC curve, MT curve, Trapecloid curve					
Lift direction		Lift range mm	10 to 40					
		Standard lift mm	10	20	30	40		
		Min. index angle °	25	35	41	47		
		Stroke accuracy mm	±0.2			±0.3		
		Repeatability mm	±0.05					
		Cam curve	MS curve					
Input shaft rotational speed[Note 1] rpm			max.120					
Product weight kg			50					
Oil level ℓ			2.0					
Paint color			Silver					

Descriptions			PPIX140/PPOX140					
Swing direction	Index specifications	Index number	2	3	4	6	8	
		Min. index angle °	120	90	60	45	35	
		Indexing accuracy " (sec.)	±120					
		Repeatability " (sec.)	30					
		Dwell accuracy " (sec.)	60					
		Cam curve	MS curve (standard), MC curve, MT curve, Trapecloid curve					
	Oscillator specifications	Oscillating angle °	30	45	60	90	120	180
		Min. index angle °	30	35	45	60	90	120
		Indexing accuracy " (sec.)	±120					
		Repeatability " (sec.)	30					
		Dwell accuracy " (sec.)	60					
		Cam curve	MS curve (standard), MC curve, MT curve, Trapecloid curve					
Lift direction		Lift range mm	10 to 50					
		Standard lift mm	10	20	30	40	50	
		Min. index angle °	20	30	35	40	45	
		Stroke accuracy mm	±0.2			±0.3		
		Repeatability mm	±0.05					
		Cam curve	MS curve					
Input shaft rotational speed[Note 1] rpm			max.80					
Product weight kg			90					
Oil level ℓ			4.0					
Paint color			Silver					

Descriptions			PPIX180/PPOX180						
Swing direction	Index specifications	Index number	2	3	4	6	8		
		Min. index angle °	120	90	60	45	35		
		Indexing accuracy " (sec.)	±120						
		Repeatability " (sec.)	30						
		Dwell accuracy " (sec.)	60						
		Cam curve	MS curve (standard), MC curve, MT curve, Trapecloid curve						
	Oscillator specifications	Oscillating angle °	30	45	60	90	120	180	
		Min. index angle °	30	35	45	60	90	120	
		Indexing accuracy " (sec.)	±120						
		Repeatability " (sec.)	30						
		Dwell accuracy " (sec.)	60						
		Cam curve	MS curve (standard), MC curve, MT curve, Trapecloid curve						
Lift direction		Lift range mm	10 to 70						
		Standard lift mm	10	20	30	40	50	60	70
		Min. index angle °	18	26	31	36	40	44	48
		Stroke accuracy mm	±0.2			±0.3			
		Repeatability mm	±0.05						
		Cam curve	MS curve						
Input shaft rotational speed[Note 1] rpm			max.60						
Product weight kg			185						
Oil level ℓ			8.0						
Paint color			Silver						

Note 1. For speed exceeding the specifications, contact us.

Note 2. For details of accuracy, refer to the page B-30.

Circular P&P drive standard

PPIX/PPOX Series

● Difference between shafts: 50, 63, 80, 110, 140, 180 mm

How to order

PPOX 080 - 060 030 S T S 1 - X012345
Ⓐ Ⓑ Ⓒ Ⓓ Ⓔ Ⓕ Ⓖ Ⓗ Ⓘ

Ⓐ Model No.	Ⓑ RO Shaft interval		Ⓒ Index number (n) and oscillating angle (ψ)				Ⓓ Lift (*Lo*)		Ⓔ Cam curve		Ⓕ Spiral direction of the cam and orbit pattern	
			PPIX Index number (*n*)		PPOX Oscillating angle (*ψ*)						PPIX (spiral direction of the cam)	
PPIX Index P&P Motion PPOX Oscillator P&P Motion	050 063 080 110 140 180	50 mm 63 mm 80 mm 110 mm 140 mm 180 mm	002 003 004 006 008	2 3 4 6 8	180 120 090 060 045 030	180° 120° 90° 60° 45° 30°	005 to 070	5 mm to 70 mm	S C T P *	MS curve (standard) MC curve (MCV50) MT curve Trapecloid curve This indicates the cam curve for the swing direction. When there are more than 1 cam curve, this will be "x".	L R	Left helix (standard) 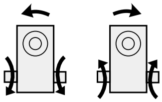 Right helix 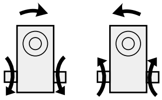

	Ⓖ Shape of the output shaft	Ⓗ Installation position	Ⓘ Special specification No.
PPOX (orbit pattern) T Standard When the input shaft starts to rotate from the rotation reference point, the output shaft rotates in sequence from 1 and 2 as in the figure. 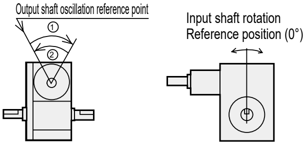 S Option 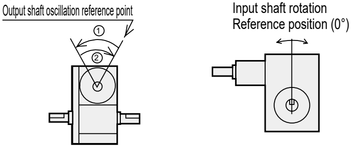	S Straight (without keyway) * For the following specifications, contact CKD. • Hollow hole specification • With Torque saver	1 Position 1 Output shaft facing upward * For the position other than #1, contact CKD.	* To place an order for a P&P drive, "Special specification number" is required. The special specification model number shall be determined after a consultation with the customer. Mounting options are available upon request. Please provide CKD with the specifications.

Dimensions

● Body

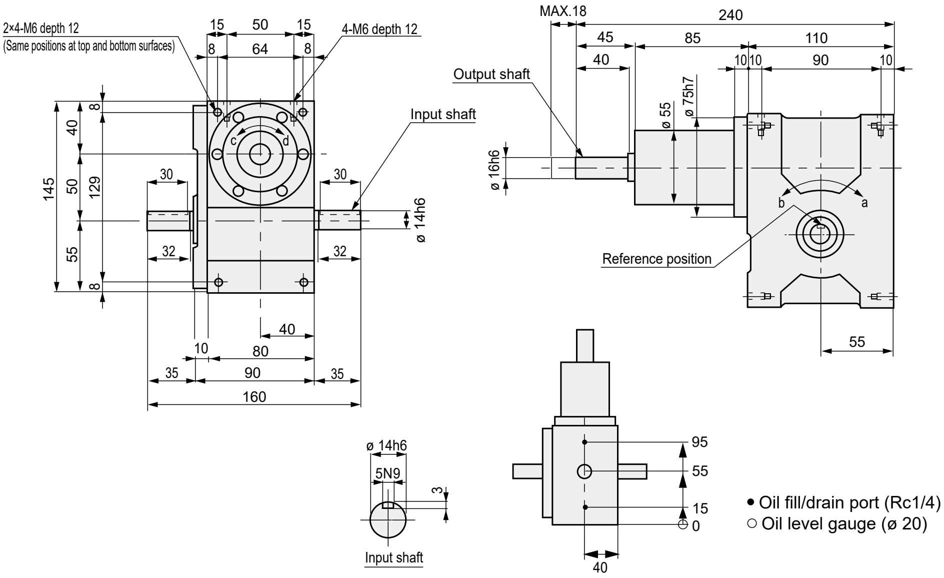

● Oil fill/drain port (Rc1/4)
○ Oil level gauge (ø 20)

Characteristics

Descriptions		Characteristics	
		Output shaft	Input shaft
Allowable thrust force	N	*	1000
Allowable radial force	N	150	900
Allowable bending moment	N·m	10	-
Torsion rigidity (K)	N·m/rad	1200	-
Moment of inertia	$kg·m^2$	1.32×10^{-4}	6.86×10^{-4}

* Allowable output shaft thrust force is defined in the following formula.
Output shaft allowable thrust force = (allowable payload - max. payload) × 9.81 (N)

Descriptions		Characteristics
Internal frictional torque (Tin)	N·m	5
Output shaft inner weight (mo)	kg	0.4
Product weight	kg	8
Oil level	ℓ	0.3
Paint color		Silver

Accuracy

Descriptions		Index	
		Swing direction	Oscillator
Indexing accuracy	" (sec.)	±120	±120
Repeatability	" (sec.)	30	30
Dwell accuracy	" (sec.)	60	60

Descriptions		Lift direction
Stroke accuracy	mm	*
Repeatability	mm	±0.05

* Lift value 6 or less: ±0.1
Over 6 to 18: ±0.2

Output torque table

Index P&P

PPIX050 Cam curve/MS

Index number n (°)	Index angle: θh (°)	Static rated output torque (N·m)	Dynamic rated output torque Tr (N·m)							
			Input shaft rotational speed N (rpm)							
			20	30	40	50	60	80	100	120
2	120	11.8	4.8	4.7	4.5	4.4	4.1	3.7	3.4	3.1
	150	14.7	7.2	7.0	6.8	6.7	6.2	5.6	5.1	4.7
3	90	14.7	6.7	6.5	6.3	6.2	5.7	5.1	4.6	4.3
	120	14.7	7.8	7.6	7.4	7.3	6.8	6.0	5.5	5.1
	150	14.7	8.4	8.4	8.2	8.0	7.5	6.7	6.1	5.7
4	60	4.0	2.4	2.3	2.3	2.2	2.0	1.8	1.6	1.4
	75	5.8	4.0	3.8	3.8	3.7	3.4	3.0	2.7	2.5
	90	11.8	6.0	5.8	5.6	5.5	5.1	4.6	4.2	3.8
6	45	14.7	6.5	6.2	6.1	5.9	5.5	4.9	4.4	4.1
	60	14.7	7.6	7.4	7.2	7.0	6.5	5.8	5.3	4.9
	75	14.7	8.4	8.1	7.9	7.8	7.2	6.4	5.9	5.5
8	35	5.8	3.7	3.6	3.5	3.4	3.1	2.8	2.5	2.2
	45	11.8	5.8	5.6	5.4	5.3	4.9	4.4	4.0	3.7
	60	11.8	6.6	6.3	6.2	6.0	5.6	5.0	4.6	4.2

Output torque table

Oscillator P&P

PPOX050 Cam curve/MS

Oscillating angle ψ (°)	Index angle: θh (°)	Static rated output torque (N·m)	Dynamic rated output torque Tr (N·m)							
			Input shaft rotational speed N (rpm)							
			20	30	40	50	60	80	100	120
30	30	11.8	5.7	5.2	4.6	4.2	3.9	3.5	3.1	2.8
	45	14.7	8.7	8.0	7.1	6.5	6.1	5.4	4.9	4.6
	60	14.7	9.3	8.6	7.7	7.1	6.6	5.9	5.4	5.0
45	35	11.8	5.0	4.6	4.1	3.7	3.5	3.0	2.7	2.4
	45	14.7	7.5	6.9	6.1	5.6	5.2	4.6	4.2	3.9
	60	14.7	8.5	7.8	7.0	6.4	5.9	5.3	4.8	4.5
60	45	14.7	6.5	5.9	5.3	4.8	4.5	4.0	3.6	3.3
	60	14.7	7.6	7.0	6.2	5.7	5.3	4.7	4.3	4.0
	75	14.7	8.4	7.7	6.9	6.3	5.9	5.2	4.8	4.4
90	60	11.8	4.7	4.3	3.8	3.5	3.2	2.9	2.6	2.3
	75	14.7	7.1	6.4	5.7	5.3	4.9	4.4	4.0	3.7
	90	14.7	7.8	7.1	6.4	5.8	5.4	4.8	4.4	4.1
120	90	14.7	6.7	6.1	5.5	5.0	4.6	4.1	3.8	3.5
	120	14.7	7.8	7.2	6.4	5.9	5.5	4.9	4.5	4.1
	150	14.7	8.4	7.9	7.1	6.5	6.1	5.4	5.0	4.6
180	120	11.8	4.8	4.4	3.9	3.6	3.4	3.0	2.7	2.5
	150	14.7	7.2	6.6	5.9	5.4	5.1	4.5	4.1	3.8

Payload table

PPIX/PPOX050 Cam curve/MS

Lift Lo (mm)	Index angle: θh (°)	Rated dynamic payload Mm (kg)							
		Input shaft rotational speed N (rpm)							
		20	30	40	50	60	80	100	120
5	24	3.4	2.7	2.2	1.7	1.4	0.9	0.5	0.3
	30	3.5	2.9	2.4	2.0	1.7	1.2	0.8	0.5
	40	3.7	3.1	2.7	2.3	2.1	1.6	1.2	0.9
10	33	3.2	2.5	2.0	1.6	1.2	0.7	0.4	0.2
	40	3.4	2.7	2.3	1.9	1.5	1.0	0.7	0.4
	50	3.5	2.9	2.5	2.2	1.9	1.4	1.0	0.7
15	40	3.0	2.3	1.9	1.5	1.1	0.7	0.4	0.2
	50	3.2	2.7	2.2	1.8	1.5	1.0	0.7	0.4
	60	3.4	2.8	2.4	2.1	1.8	1.3	0.9	0.6
18	44	2.9	2.3	1.8	1.4	1.1	0.7	0.4	0.2
	50	3.1	2.5	2.0	1.6	1.3	0.8	0.5	0.3
	60	3.3	2.7	2.3	1.9	1.6	1.1	0.8	0.5

Dimensions

CAD

● Body

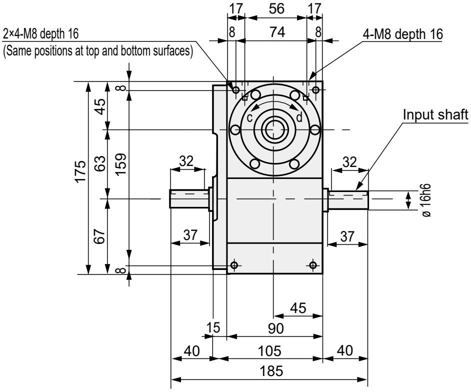

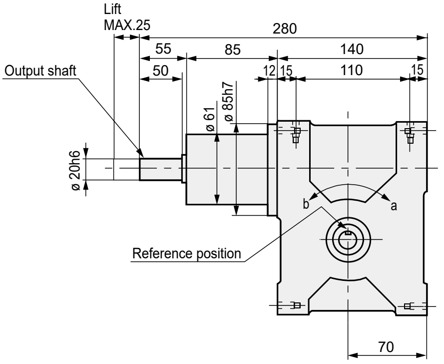

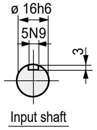

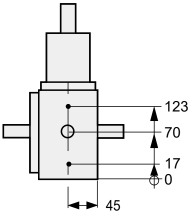

- ● Oil fill/drain port (Rc1/4)
- ○ Oil level gauge (ø 20)

Characteristics

Descriptions		Characteristics	
		Output shaft	Input shaft
Allowable thrust force	N	*	1500
Allowable radial force	N	190	1100
Allowable bending moment	N·m	15	-
Torsion rigidity (K)	N·m/rad	4200	-
Moment of inertia	$kg\cdot m^2$	5.14×10^{-4}	2.19×10^{-3}

* Allowable output shaft thrust force is defined in the following formula.
Output shaft allowable thrust force = (allowable payload - max. payload) × 9.81 (N)

Descriptions		Characteristics
Internal frictional torque (Tin)	N·m	7
Output shaft inner weight (mo)	kg	0.8
Product weight	kg	15
Oil level	ℓ	0.5
Paint color		Silver

Accuracy

Descriptions		Swing direction	
		Index	Oscillator
Indexing accuracy	" (sec.)	±120	±120
Repeatability	" (sec.)	30	30
Dwell accuracy	" (sec.)	60	60

Descriptions		Lift direction
Stroke accuracy	mm	*
Repeatability	mm	±0.05

* Lift value 6 or less: ±0.1
Over 6 to 25: ±0.2

Output torque table

Index P&P

PPIX063 Cam curve/MS

Index number n (°)	Index angle: θh (°)	Static rated output torque (N·m)	Dynamic rated output torque Tr (N·m)							
			Input shaft rotational speed N (rpm)							
			20	30	40	50	60	80	100	120
2	120	18.7	7.9	7.6	7.4	7.3	6.7	6.0	5.4	4.9
	150	30.9	17.0	16.7	16.2	15.9	14.8	13.2	12.0	11.1
3	90	30.9	15.9	15.3	14.9	14.6	13.5	12.0	10.9	10.0
	120	30.9	18.6	18.2	17.7	17.4	16.2	14.4	13.1	12.2
	150	30.9	20.3	20.3	19.7	19.3	18.0	16.1	14.7	13.6
4	60	14.6	5.9	5.7	5.5	5.3	4.9	4.3	3.7	3.2
	75	14.6	6.8	6.5	6.3	6.2	5.7	5.0	4.5	4.1
	90	18.7	9.8	9.5	9.2	9.0	8.4	7.4	6.7	6.2
6	45	30.9	15.4	14.8	14.4	14.0	13.0	11.5	10.3	9.3
	60	30.9	18.3	17.6	17.2	16.8	15.6	13.9	12.6	11.6
	75	30.9	20.3	19.6	19.1	18.7	17.4	15.5	14.1	13.1
8	35	14.6	6.3	6.0	5.8	5.7	5.2	4.4	3.8	3.2
	45	18.7	9.5	9.2	8.9	8.7	8.0	7.1	6.3	5.7
	60	18.7	10.8	10.4	10.1	9.9	9.2	8.1	7.4	6.8

Output torque table

Oscillator P&P

PPOX063 Cam curve/MS

Oscillating angle ψ (°)	Index angle: θh (°)	Static rated output torque (N·m)	Dynamic rated output torque Tr (N·m)							
			Input shaft rotational speed N (rpm)							
			20	30	40	50	60	80	100	120
30	30	18.7	9.3	8.5	7.5	6.9	6.3	5.5	4.8	4.1
	45	30.9	21.2	19.3	17.3	15.8	14.7	13.0	11.9	10.9
	60	30.9	22.8	21.1	18.9	17.3	16.1	14.3	13.1	12.1
45	35	18.7	8.3	7.5	6.7	6.0	5.5	4.7	4.1	3.5
	45	30.9	18.1	16.5	14.7	13.4	12.5	11.0	9.9	9.1
	60	30.9	20.7	18.8	16.8	15.4	14.3	12.7	11.6	10.7
60	45	30.9	15.4	14.0	12.5	11.4	10.5	9.3	8.3	7.4
	60	30.9	18.3	16.7	14.9	13.6	12.7	11.2	10.2	9.3
	75	30.9	20.3	18.6	16.6	15.2	14.1	12.6	11.5	10.6
90	60	30.9	14.4	13.1	11.7	10.7	9.9	8.7	7.8	7.0
	75	30.9	16.8	15.3	13.6	12.5	11.6	10.3	9.3	8.5
	90	30.9	18.6	17.0	15.2	13.9	12.9	11.5	10.5	9.6
120	90	30.9	15.9	14.5	12.9	11.8	11.0	9.7	8.8	8.1
	120	30.9	18.6	17.2	15.4	14.1	13.1	11.7	10.6	9.8
	150	30.9	20.3	19.2	17.1	15.7	14.6	13.0	11.9	11.0
180	120	18.7	7.9	7.2	6.5	5.9	5.5	4.8	4.3	3.9
	150	30.9	17.0	15.8	14.1	12.9	12.0	10.7	9.7	9.0

Payload table

PPIX/PPOX063 Cam curve/MS

Lift Lo (mm)	Index angle: θh (°)	Rated dynamic payload Mm (kg)							
		Input shaft rotational speed N (rpm)							
		20	30	40	50	60	80	100	120
5	20	6.0	4.6	3.5	2.7	2.0	1.1	0.5	0.1
	25	6.4	5.1	4.1	3.3	2.7	1.7	1.0	0.5
	35	6.7	5.6	4.8	4.1	3.5	2.6	1.8	1.3
10	28	5.7	4.3	3.3	2.5	1.9	1.0	0.4	0.1
	35	6.2	4.9	4.0	3.2	2.5	1.6	0.9	0.5
	40	6.4	5.2	4.3	3.5	2.9	1.9	1.2	0.8
15	35	5.5	4.2	3.2	2.4	1.8	1.0	0.4	0.1
	40	5.8	4.6	3.6	2.8	2.2	1.3	0.7	0.3
	50	6.2	5.1	4.2	3.5	2.9	1.9	1.2	0.8
20	40	5.2	3.9	3.0	2.3	1.7	0.9	0.3	-
	45	5.5	4.3	3.4	2.6	2.0	1.2	0.6	0.2
	55	6.0	4.8	4.0	3.3	2.7	1.7	1.1	0.6
25	45	5.0	3.8	2.9	2.2	1.6	0.8	0.3	-
	50	5.3	4.1	3.2	2.5	1.9	1.1	0.5	0.2
	60	5.8	4.6	3.8	3.1	2.5	1.6	1.0	0.5

Pick and Place drive

PPIX/PPOX 080

Dimensions

● Body

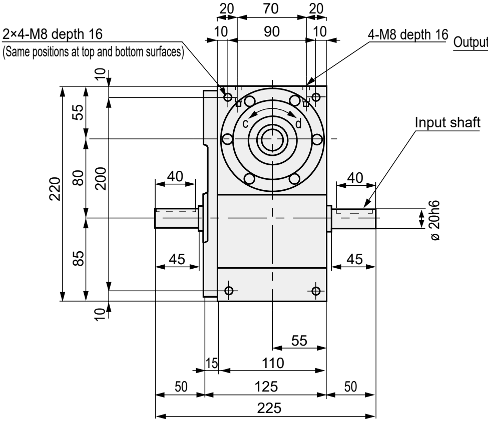

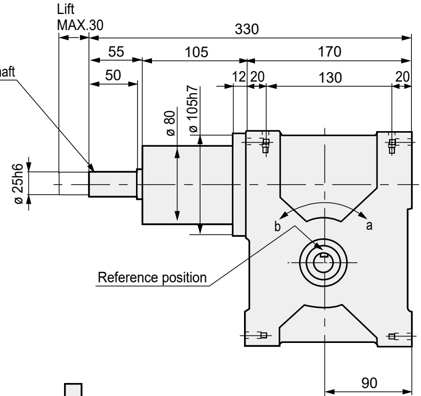

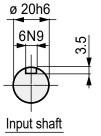

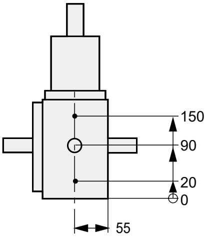

- ● Oil fill/drain port (Rc3/8)
- ○ Oil level gauge (ø 30)

Characteristics

Descriptions		Characteristics	
		Output shaft	Input shaft
Allowable thrust force	N	*	2700
Allowable radial force	N	280	2200
Allowable bending moment	N·m	40	-
Torsion rigidity (K)	N·m/rad	10000	-
Moment of inertia	kg·m^2	9.41×10^{-4}	7.4×10^{-3}

* Allowable output shaft thrust force is defined in the following formula.
Output shaft allowable thrust force = (allowable payload - max. payload) × 9.81 (N)

Descriptions		Characteristics
Internal frictional torque (Tin)	N·m	10
Output shaft inner weight (mo)	kg	1.6
Product weight	kg	25
Oil level	ℓ	1.0
Paint color		Silver

Accuracy

Descriptions		Swing direction	
		Index	Oscillator
Indexing accuracy	" (sec.)	±120	±120
Repeatability	" (sec.)	30	30
Dwell accuracy	" (sec.)	60	60

Descriptions		Lift direction
Stroke accuracy	mm	*
Repeatability	mm	±0.05

* Lift value 6 or less: ±0.1
Over 6 to 30: ±0.2

Output torque table

Index P&P

PPIX080 Cam curve/MS										
Index number n (°)	Index angle: *θh* (°)	Static rated output torque (N·m)	Dynamic rated output torque *Tr* (N·m)							
			Input shaft rotational speed *N* (rpm)							
			20	30	40	50	60	80	100	120
2	120	51.5	26.3	25.3	24.7	24.1	22.4	19.9	18.1	16.7
	150	51.5	29.9	29.3	28.6	28.0	26.0	23.2	21.1	19.6
3	90	51.5	28.0	26.9	26.2	25.7	23.8	21.2	19.2	17.7
	120	51.5	32.6	31.8	31.0	30.4	28.3	25.2	23.0	21.3
	150	51.5	35.3	35.3	34.4	33.7	31.3	27.9	25.6	23.7
4	60	23.3	9.7	9.3	9.1	8.8	8.1	7.0	6.1	5.3
	75	37.9	21.1	20.3	19.8	19.3	18.0	15.9	14.4	13.1
	90	37.9	23.3	22.5	21.9	21.4	19.9	17.7	16.1	14.8
6	45	51.5	27.1	26.1	25.3	24.7	22.9	20.2	18.2	16.5
	60	51.5	32.0	30.8	30.0	29.4	27.3	24.2	22.0	20.2
	75	51.5	35.3	34.2	33.3	32.6	30.3	27.0	24.6	22.7
8	35	23.3	10.4	10.0	9.7	9.4	8.6	7.3	6.2	5.2
	45	37.9	22.6	21.8	21.2	20.7	19.2	16.9	15.3	13.9
	60	37.9	25.7	24.8	24.1	23.6	21.9	19.5	17.7	16.3

Output torque table

Oscillator P&P

PPOX080 Cam curve/MS										
Oscillating angle *ψ* (°)	Index angle: *θh* (°)	Static rated output torque (N·m)	Dynamic rated output torque *Tr* (N·m)							
			Input shaft rotational speed *N* (rpm)							
			20	30	40	50	60	80	100	120
30	30	37.9	22.2	20.2	18.0	16.4	15.1	13.2	11.7	10.4
	45	51.5	36.7	33.5	29.9	27.4	25.4	22.6	20.5	18.9
	60	51.5	39.3	36.4	32.5	29.8	27.7	24.7	22.5	20.8
45	35	37.9	19.6	17.8	15.8	14.4	13.3	11.5	10.1	8.8
	45	51.5	31.6	28.8	25.7	23.5	21.8	19.3	17.4	15.8
	60	51.5	35.9	32.7	29.2	26.8	24.9	22.1	20.1	18.5
60	45	51.5	27.1	24.7	22.0	20.1	18.6	16.3	14.6	13.1
	60	51.5	32.0	29.2	26.1	23.8	22.1	19.6	17.8	16.3
	75	51.5	35.3	32.3	28.9	26.4	24.6	21.9	19.9	18.4
90	60	51.5	25.5	23.2	20.7	18.9	17.5	15.4	13.8	12.5
	75	51.5	29.5	26.9	24.0	21.9	20.4	18.1	16.4	15.0
	90	51.5	32.6	29.8	26.6	24.3	22.6	20.1	18.3	16.9
120	90	51.5	28.0	25.5	22.8	20.8	19.3	17.1	15.5	14.2
	120	51.5	32.6	30.2	26.9	24.7	22.9	20.4	18.6	17.2
	150	51.5	35.3	33.4	29.8	27.3	25.4	22.7	20.7	19.2
180	120	51.5	26.3	24.0	21.4	19.6	18.2	16.1	14.6	13.4
	150	51.5	29.9	27.8	24.8	22.7	21.1	18.8	17.1	15.8

Payload table

PPIX/PPOX080 Cam curve/MS									
Lift *Lo* (mm)	Index angle: *θh* (°)	Rated dynamic payload *Mm* (kg)							
		Input shaft rotational speed *N* (rpm)							
		20	30	40	50	60	80	100	120
5	19	11.1	8.4	6.3	4.7	3.5	1.7	0.7	-
	30	12.2	10.0	8.3	7.0	5.8	3.9	2.6	1.6
	40	12.6	10.6	9.1	7.9	6.9	5.2	3.9	2.8
10	26	10.6	7.9	5.9	4.3	3.1	1.5	0.5	-
	30	11.1	8.6	6.7	5.1	3.9	2.1	1.0	0.3
	40	11.9	9.7	8.0	6.6	5.4	3.6	2.3	1.3
15	32	10.2	7.6	5.7	4.2	3.0	1.4	0.5	-
	40	11.1	8.8	6.9	5.5	4.2	2.5	1.3	0.5
	50	11.8	9.6	7.9	6.6	5.4	3.6	2.3	1.4
20	38	10.0	7.5	5.6	4.2	3.0	1.4	0.5	-
	45	10.8	8.4	6.6	5.2	4.0	2.3	1.1	0.4
	55	11.5	9.3	7.6	6.2	5.1	3.3	2.0	1.1
25	42	9.6	7.2	5.4	3.9	2.8	1.3	0.4	-
	50	10.5	8.2	6.4	5.0	3.8	2.1	1.1	0.3
	60	11.2	9.0	7.3	6.0	4.8	3.1	1.9	1.0
30	46	9.4	7.0	5.2	3.8	2.7	1.2	0.3	-
	50	9.8	7.5	5.7	4.3	3.2	1.6	0.6	-
	60	10.6	8.4	6.8	5.4	4.2	2.5	1.4	0.6

Dimensions

● Body

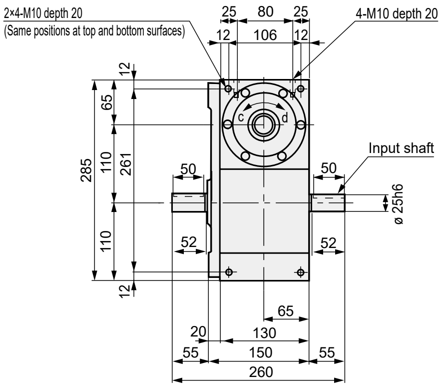

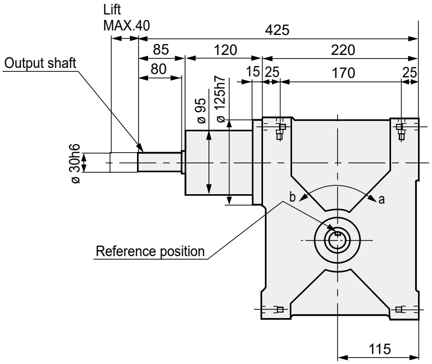

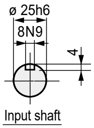

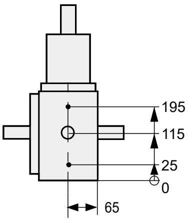

● Oil fill/drain port (Rc3/8)
○ Oil level gauge (ø 30)

Characteristics

Descriptions	Characteristics	
	Output shaft	Input shaft
Allowable thrust force N	*	3200
Allowable radial force N	400	3300
Allowable bending moment N·m	60	-
Torsion rigidity (K) N·m/rad	20000	-
Moment of inertia kg·m^2	3.59 × 10^{-3}	3.42 × 10^{-2}

* Allowable output shaft thrust force is defined in the following formula.
Output shaft allowable thrust force = (allowable payload - max. payload) × 9.81 (N)

Descriptions	Characteristics
Internal frictional torque (Tin) N·m	20
Output shaft inner weight (mo) kg	2.9
Product weight kg	50
Oil level ℓ	2.0
Paint color	Silver

Accuracy

Descriptions	Swing direction	
	Index	Oscillator
Indexing accuracy " (sec.)	±120	±120
Repeatability " (sec.)	30	30
Dwell accuracy " (sec.)	60	60

Descriptions	Lift direction
Stroke accuracy mm	*
Repeatability mm	±0.05

* Lift value 30 or less: ±0.2
more than 30 and 40 or less: ±0.3

Output torque table

Index P&P

PPIX110 Cam curve/MS										
Index number n (°)	Index angle: *θh* (°)	Static rated output torque (N·m)	Dynamic rated output torque *Tr* (N·m)							
			Input shaft rotational speed *N* (rpm)							
			20	30	40	50	60	80	100	120
2	120 150	129.0 140.0	54.8 98.0	52.8 96.0	51.3 93.5	50.2 91.6	46.5 90.0	41.2 85.9	37.1 78.4	33.9 72.6
3	90 120 150	129.0 140.0 140.0	58.3 107.0 116.0	56.1 104.0 115.0	54.6 102.0 112.0	53.3 99.4 110.0	49.4 97.7 108.0	43.6 93.3 104.0	39.3 85.2 94.7	35.7 78.8 87.9
4	60 75 90	67.4 67.4 91.5	34.9 40.3 59.4	33.5 38.7 57.3	32.4 37.6 55.7	31.5 36.7 54.5	29.0 33.9 50.6	25.0 29.8 44.8	21.7 26.5 40.6	18.8 23.8 37.1
6	45 60 75	140.0 140.0 140.0	88.7 105.0 116.0	85.3 101.0 112.0	82.9 98.3 109.0	81.0 96.1 107.0	79.3 94.4 105.0	74.9 89.9 100.0	67.3 81.6 91.2	60.9 75.0 84.3
8	35 45 60	67.4 91.5 129.0	37.3 57.6 74.7	35.8 55.4 71.9	34.6 53.8 70.0	33.5 52.5 68.5	30.7 48.6 63.6	26.1 42.6 56.4	22.2 38.0 51.1	18.5 34.1 46.9

Output torque table

Oscillator P&P

PPOX110 Cam curve/MS										
Oscillating angle *ψ* (°)	Index angle: *θh* (°)	Static rated output torque (N·m)	Dynamic rated output torque *Tr* (N·m)							
			Input shaft rotational speed *N* (rpm)							
			20	30	40	50	60	80	100	120
30	30 45 60	129 140 140	64.6 120.0 129.0	58.7 116.0 126.0	52.2 111.0 120.0	47.4 101.0 110.0	43.7 94.3 103.0	37.8 83.8 91.4	33.1 76.1 83.4	28.9 70.0 77.2
45	35 45 60	129 140 140	57.0 103.0 117.0	51.8 99.6 113.0	46.0 95.3 108.0	41.7 87.1 99.2	38.3 80.8 92.2	32.9 71.4 82.0	28.4 64.4 74.5	24.3 58.7 68.7
60	45 60 75	140 140 140	88.7 105.0 116.0	85.3 101.0 112.0	81.5 96.6 107.0	74.4 88.4 98.0	68.9 82.1 91.1	60.5 72.8 81.1	54.0 65.9 73.8	48.6 60.4 68.1
90	60 75 90	129 140 140	53.1 96.6 107.0	48.3 93.0 103.0	42.9 89.0 98.5	39.1 81.4 90.2	36.0 75.6 83.8	31.3 67.0 74.5	27.5 60.6 67.8	24.1 55.5 62.5
120	90 120 150	129 140 140	58.3 107.0 116.0	53.1 104.0 115.0	47.3 99.9 111.0	43.2 91.4 101.0	40.0 85.0 94.3	35.2 75.7 84.1	31.6 69.0 76.8	28.6 63.8 71.2
180	120 150	129 140	54.8 98.0	50.0 96.0	44.5 92.0	40.7 84.2	37.7 78.3	33.3 69.7	29.9 63.5	27.1 58.7

Payload table

PPIX/PPOX110 Cam curve/MS									
Lift *Lo* (mm)	Index angle: *θh* (°)	Rated dynamic payload *Mm* (kg)							
		Input shaft rotational speed *N* (rpm)							
		20	30	40	50	60	80	100	120
10	25 30 40	22.4 23.7 25.1	16.7 18.4 20.5	12.4 14.4 17.0	9.1 11.2 14.1	6.6 8.6 11.6	3.2 4.9 7.8	1.3 2.6 5.1	- 1.1 3.2
20	35 45 55	21.3 23.3 24.5	15.8 18.3 19.9	11.6 14.5 16.4	8.5 11.4 13.5	6.1 8.9 11.1	2.9 5.3 7.3	1.0 2.9 4.7	- 1.4 2.8
30	41 50 60	19.8 21.8 23.3	14.5 16.8 18.5	10.5 13.0 14.9	7.5 9.9 12.0	5.2 7.5 9.6	2.3 4.1 5.9	0.6 2.0 3.5	- 0.6 1.8
40	47 50 60	18.9 19.6 21.5	13.7 14.5 16.7	9.9 10.7 13.0	7.0 7.7 10.0	4.8 5.5 7.6	2.0 2.5 4.3	0.4 0.8 2.1	- - 0.8

Dimensions

CAD

● Body

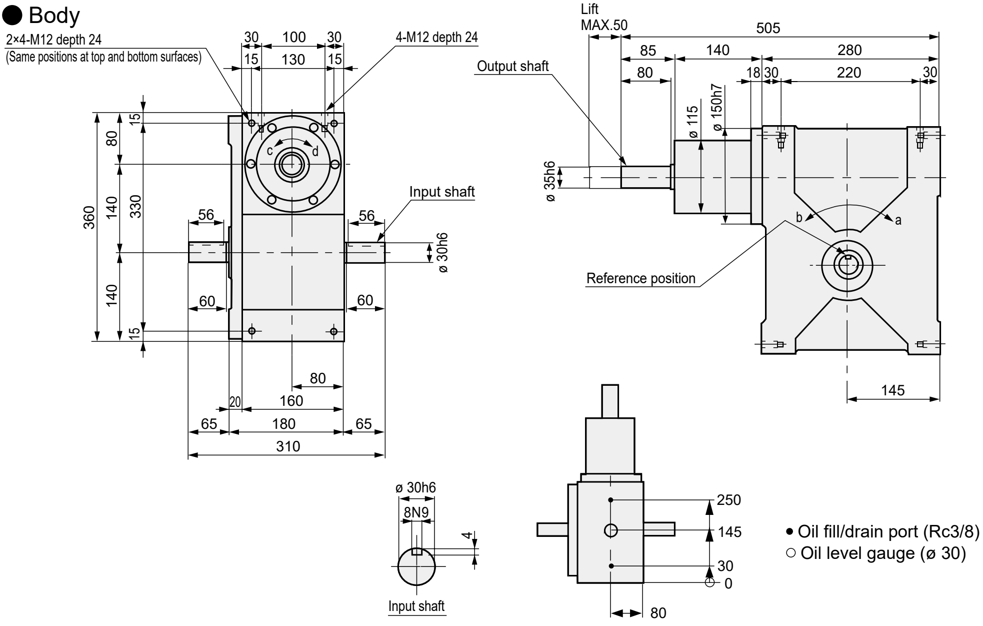

● Oil fill/drain port (Rc3/8)
○ Oil level gauge (ø 30)

Characteristics

Descriptions	Characteristics	
	Output shaft	Input shaft
Allowable thrust force N	*	4800
Allowable radial force N	530	4900
Allowable bending moment N·m	120	-
Torsion rigidity (K) N·m/rad	30000	-
Moment of inertia $kg·m^2$	7.3×10^{-3}	0.11

* Allowable output shaft thrust force is defined in the following formula.
Output shaft allowable thrust force = (allowable payload - max. payload) × 9.81 (N)

Descriptions	Characteristics
Internal frictional torque (Tin) N·m	35
Output shaft inner weight (mo) kg	5.6
Product weight kg	90
Oil level ℓ	4.0
Paint color	Silver

Accuracy

Descriptions	Swing direction	
	Index	Oscillator
Indexing accuracy " (sec.)	±120	±120
Repeatability " (sec.)	30	30
Dwell accuracy " (sec.)	60	60

Descriptions	Lift direction
Stroke accuracy mm	*
Repeatability mm	±0.05

* Lift value 30 or less: ±0.2
more than 30 and 50 or less: ±0.3

Output torque table

Index P&P

PPIX140 Cam curve/MS

Index number n (°)	Index angle: θh (°)	Static rated output torque (N·m)	Dynamic rated output torque Tr (N·m)					
			Input shaft rotational speed N (rpm)					
			20	30	40	50	60	80
2	120 150	169 272	109 197	105 193	102 188	100 184	98 178	93 159
3	90 120 150	248 272 272	151 213 229	145 208 229	141 203 223	138 198 218	128 193 212	114 172 189
4	60 75 90	148 148 169	66 76 133	64 73 128	62 71 125	60 69 122	55 64 120	47 56 114
6	45 60 75	272 272 272	178 209 229	172 201 222	167 196 216	163 192 211	158 186 205	139 165 183
8	35 45 60	148 169 248	70 129 190	68 124 183	65 120 178	63 117 174	58 115 162	49 109 144

Output torque table

Oscillator P&P

PPOX140 Cam curve/MS

Oscillating angle ψ (°)	Index angle: θh (°)	Static rated output torque (N·m)	Dynamic rated output torque Tr (N·m)					
			Input shaft rotational speed N (rpm)					
			20	30	40	50	60	80
30	30 45 60	248 272 272	165 237 253	151 226 244	134 202 218	122 185 200	113 172 186	98 152 166
45	35 45 60	248 272 272	147 206 233	134 197 222	119 175 198	108 160 181	100 149 168	87 131 150
60	45 60 75	272 272 272	178 209 229	170 199 219	151 178 196	138 163 179	128 151 167	112 134 148
90	60 75 90	248 272 272	138 194 213	126 184 203	112 165 181	102 150 166	94 140 154	82 124 137
120	90 120 150	248 272 272	151 213 229	138 206 226	123 184 202	112 168 185	104 156 172	92 139 154
180	120 150	169 272	109 197	105 190	100 170	92 156	85 145	75 129

Payload table

PPIX/PPOX140 Cam curve/MS

Lift Lo (mm)	Index angle: θh (°)	Rated dynamic payload Mm (kg)					
		Input shaft rotational speed N (rpm)					
		20	30	40	50	60	80
10	20 25 35	29.8 32.6 35.5	20.3 24.0 28.2	13.5 17.5 22.5	8.6 12.5 17.9	5.2 8.7 14.1	1.0 3.7 8.4
20	30 35 45	29.3 31.5 34.2	20.4 23.1 26.6	13.8 16.7 20.8	9.1 11.9 16.1	5.7 8.2 12.3	1.4 3.3 6.8
30	35 45 55	27.3 31.2 33.5	18.5 23.1 26.0	12.2 17.0 20.3	7.8 12.3 15.7	4.6 8.6 12.0	0.6 3.7 6.6
40	40 50 60	26.0 29.8 32.2	17.5 21.8 24.7	11.4 15.8 19.0	7.1 11.2 14.4	4.1 7.7 10.8	0.3 3.0 5.5
50	45 50 60	25.1 27.1 30.1	16.9 19.1 22.4	11.1 13.1 16.6	6.8 8.7 12.1	3.9 5.5 8.6	0.2 1.4 3.7

Dimensions

● Body

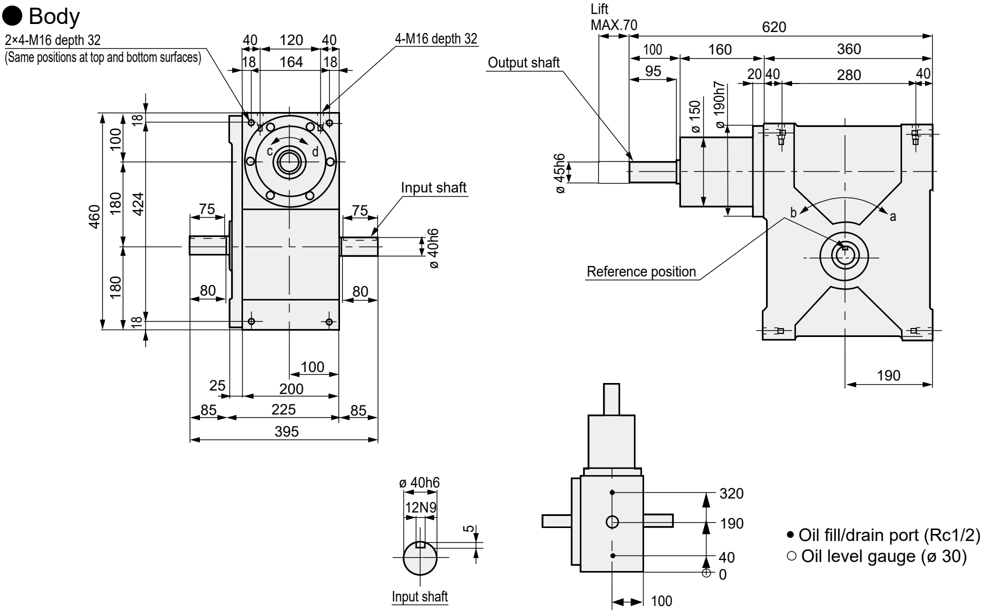

Characteristics

Descriptions		Characteristics	
		Output shaft	Input shaft
Allowable thrust force	N	*	7000
Allowable radial force	N	700	6200
Allowable bending moment	N·m	170	-
Torsion rigidity (K)	N·m/rad	70000	-
Moment of inertia	kg·m^2	2.3 × 10^{-2}	0.39

* Allowable output shaft thrust force is defined in the following formula.
Output shaft allowable thrust force = (allowable payload - max. payload) × 9.81 (N)

Descriptions		Characteristics
Internal frictional torque (Tin)	N·m	50
Output shaft inner weight (mo)	kg	11
Product weight	kg	185
Oil level	ℓ	8.0
Paint color		Silver

Accuracy

Descriptions		Swing direction	
		Index	Oscillator
Indexing accuracy	" (sec.)	±120	±120
Repeatability	" (sec.)	30	30
Dwell accuracy	" (sec.)	60	60

Descriptions		Lift direction
Stroke accuracy	mm	*
Repeatability	mm	±0.05

* Lift value 30 or less: ±0.2
more than 30 and 70 or less: ±0.3

Output torque table

Index P&P

PPIX180 Cam curve/MS

Index number n (°)	Index angle: θh (°)	Static rated output torque (N·m)	Dynamic rated output torque Tr (N·m)				
			Input shaft rotational speed N (rpm)				
			20	30	40	50	60
2	120	568	271	261	254	248	230
	150	568	306	300	292	285	265
3	90	568	287	276	269	262	243
	120	710	432	422	411	402	374
	150	710	465	464	451	442	411
4	60	216	135	129	125	121	117
	75	318	203	195	190	185	171
	90	345	272	262	255	249	241
6	45	568	278	267	259	251	232
	60	710	424	409	397	388	360
	75	710	464	449	437	428	397
8	35	318	189	181	174	168	153
	45	345	263	253	246	239	231
	60	568	361	347	338	330	306

Output torque table

Oscillator P&P

PPOX180 Cam curve/MS

Oscillating angle ψ (°)	Index angle: θh (°)	Static rated output torque (N·m)	Dynamic rated output torque Tr (N·m)				
			Input shaft rotational speed N (rpm)				
			20	30	40	50	60
30	30	568	315	286	254	230	211
	45	710	480	438	390	357	331
	60	710	510	472	422	386	359
45	35	568	280	254	225	204	187
	45	710	419	381	340	310	286
	60	710	471	429	383	350	325
60	45	568	278	253	224	203	187
	60	710	424	387	345	315	292
	75	710	464	425	379	347	322
90	60	568	263	239	212	193	177
	75	568	302	275	245	223	206
	90	710	432	394	352	322	299
120	90	568	287	262	233	213	197
	120	710	432	400	357	326	303
	150	710	465	439	392	359	334
180	120	568	271	247	220	201	186
	150	568	306	284	253	232	215

Payload table

PPIX/PPOX180 Cam curve/MS

Lift Lo (mm)	Index angle: θh (°)	Rated dynamic payload Mm (kg)				
		Input shaft rotational speed N (rpm)				
		20	30	40	50	60
10	18	41.5	26.1	15.5	8.3	3.3
	25	48.0	34.6	24.5	16.8	11.0
	35	52.1	40.8	32.1	25.0	19.2
20	26	40.4	25.6	15.3	8.2	3.4
	30	43.8	29.7	19.4	12.0	6.6
	40	49.0	36.6	27.1	19.6	13.7
30	31	38.3	23.8	13.8	7.0	2.4
	35	41.5	27.4	17.4	10.2	5.1
	45	46.8	34.1	24.4	17.0	11.2
40	36	37.1	23.0	13.3	6.7	2.1
	40	40.1	26.3	16.4	9.4	4.5
	50	45.2	32.5	22.9	15.5	9.9
50	40	35.7	21.9	12.5	6.1	1.7
	50	41.8	28.8	19.2	12.0	6.8
	60	45.8	33.6	24.3	17.1	11.4
60	44	34.7	21.2	12.0	5.7	1.4
	50	38.5	25.3	15.9	9.1	4.3
	60	43.1	30.6	21.3	14.2	8.8
70	48	33.9	20.8	11.8	5.6	1.4
	50	35.2	22.2	13.0	6.7	2.2
	60	40.4	27.8	18.5	11.6	6.5

● MEMO

PPLX

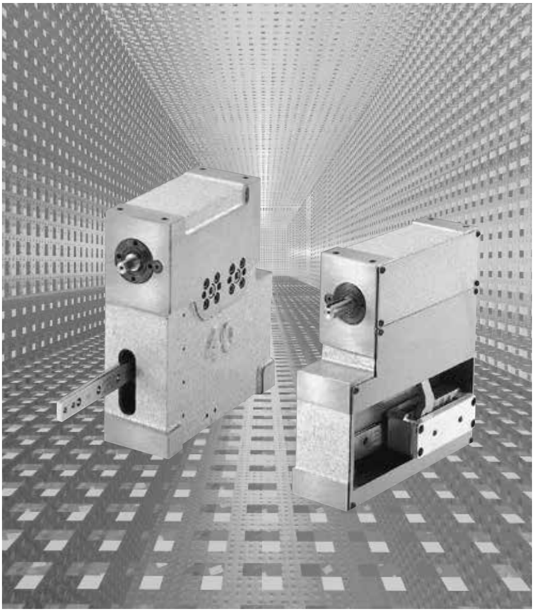

CONTENTS

High reliability/High speed transfer of 0.5 sec. per cycle

High speed production line compatible

High speed tact time of 0.5 sec. per piece. Compatible with high speed production lines of 7,200 pieces per hour.

High accuracy of ±0.02 mm

Repetitive positioning accuracy of ±0.02 mm. Suitable for a production line of precision parts or electronic parts for which accuracy is required.

Compact and thin

Compact and thin design. Small footprint.

Two different output types for your applications

Arm (type A) and Table type (type B) are available.

Four models with different strokes and capacities

Horizontal stroke: 80 to 200 mm
Size: Available in 4 sizes of 40, 50, 63 and 80.

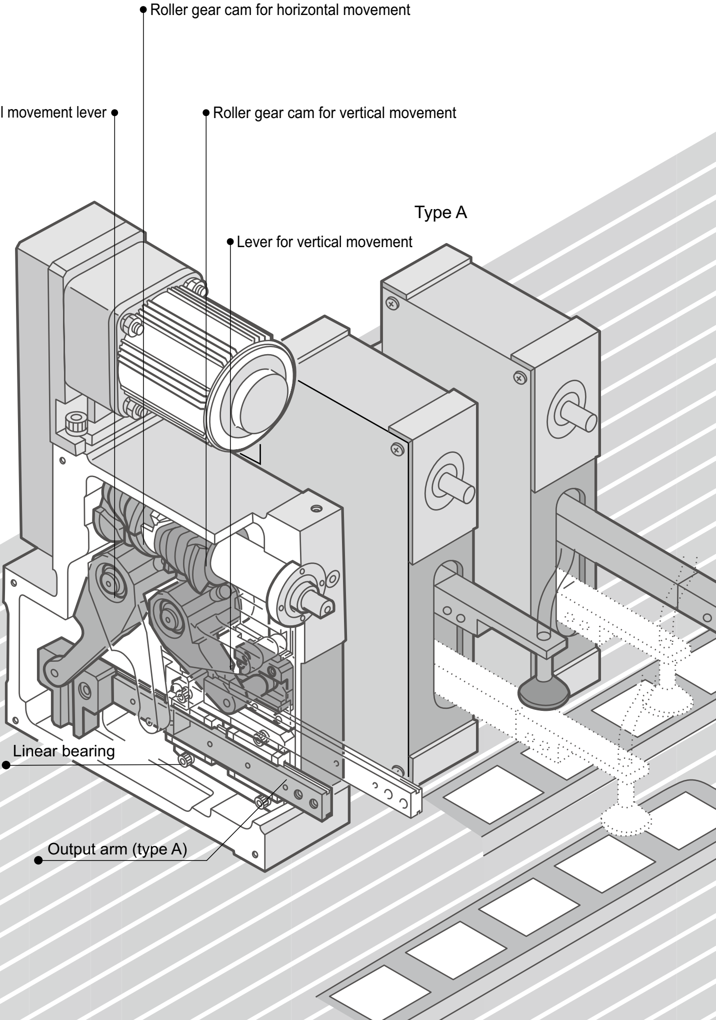

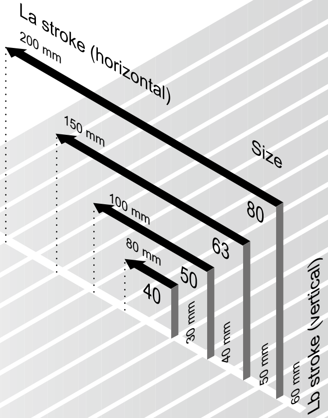

PICK&PLACE

Achieving high speed drive and high positioning accuracy.
Compact and thin straight P&P drive, PPLX Series.

Index drives in the PPLX Series are compact and thin and are Pick & Place units that move in straight lines. Roller gear cams, proven to yield high positioning accuracy with high speed drive are utilized.
The two models, the Arm (Type A) with a small footprint and the Table type (Type B) high load and high rigidity, exhibit their powerful attributes in transporting small works in a straight line to conveyors, etc.

Type B

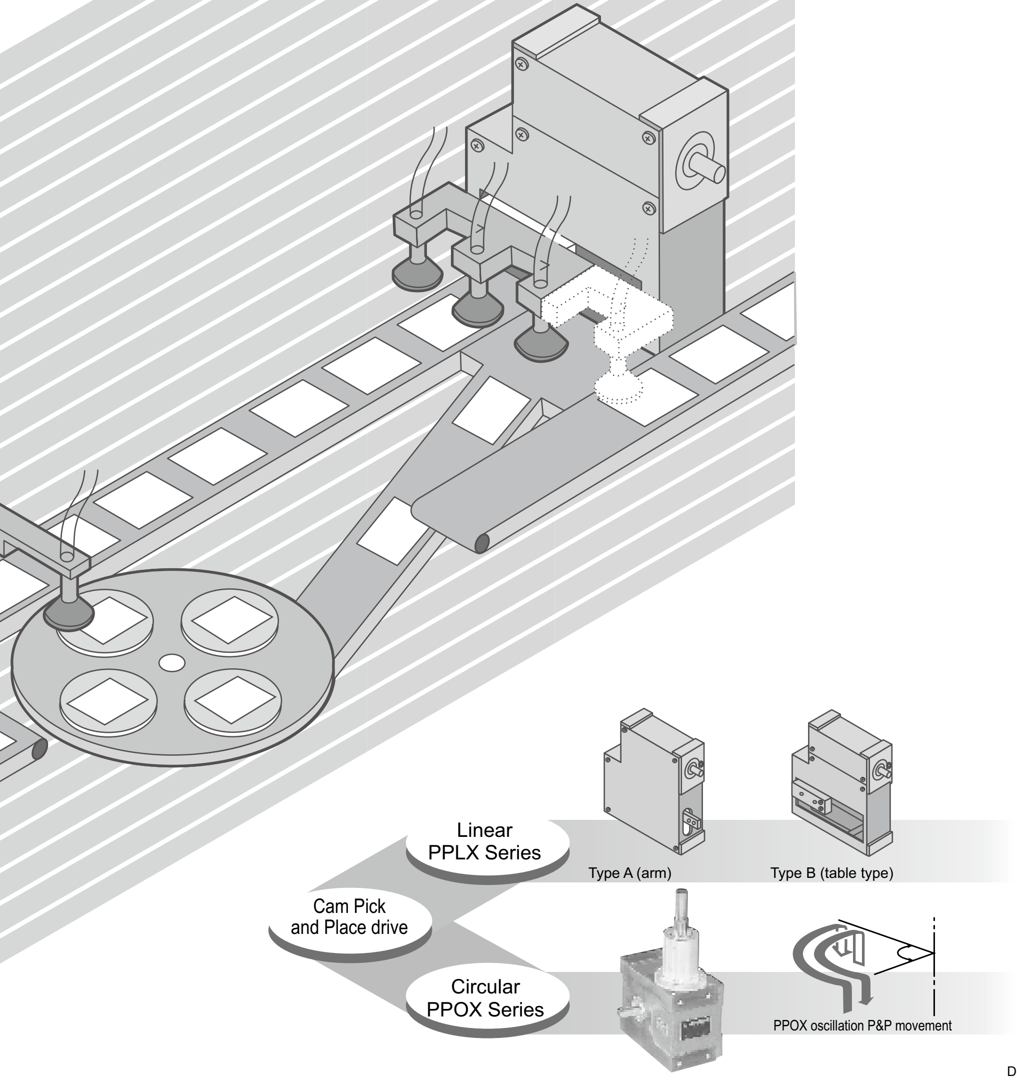

Motion and explanation

Timing chart

- The timing chart is essential when determining the specifications of a cam P&P drive as well as the model number. Create the timing chart referring to the examples below.
- When you drive the input shaft intermittently, set up dwell angle as a standby point as in the following examples, and determine the timing so that the cycle can be stopped within the dwell interval.
- Use overlap effectively so that load is reduced and work time (dwell interval) is ensured.
- Calculate overlap referring to "Index drive Catalog (Cam curve characteristics table)." (The standard cam curve for PPLX is MS curve.)
- The min. index angle in the rated dynamic payload table is for the chart examples 1 and 2. For the min. index angle in example 3 in the chart below, contact CKD.

Timing chart example

Pick & place

1 Standard chart

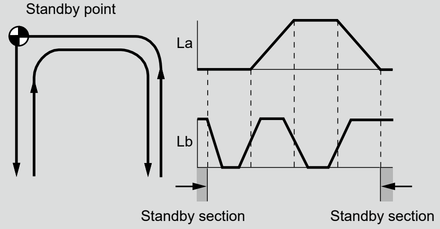

2 Chart for a different path level (different amount of lift)

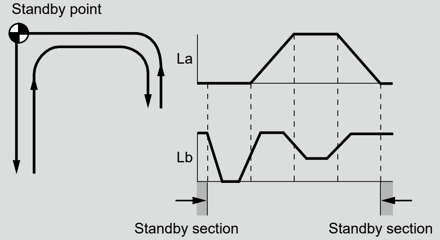

3 Chart with a standby point (dwell angle) in movement

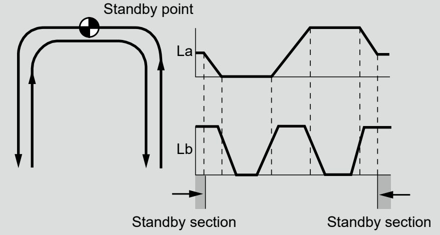

Transfer

1 Standard chart

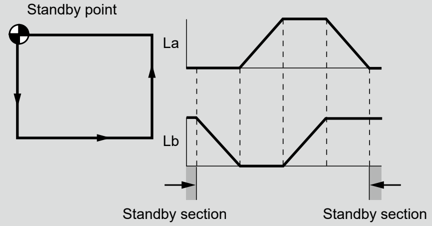

2 Chart for a different path level (different amount of lift)

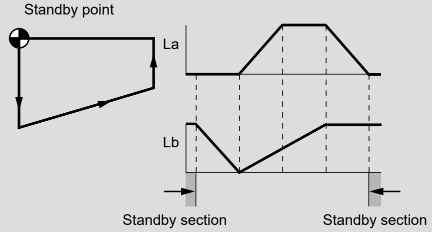

3 Chart with a standby point (dwell angle) in movement

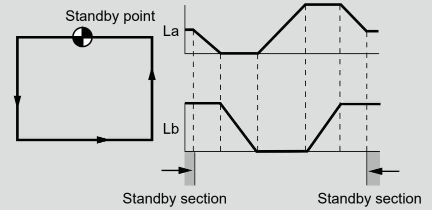

Type A (arm)

Applications — ❶

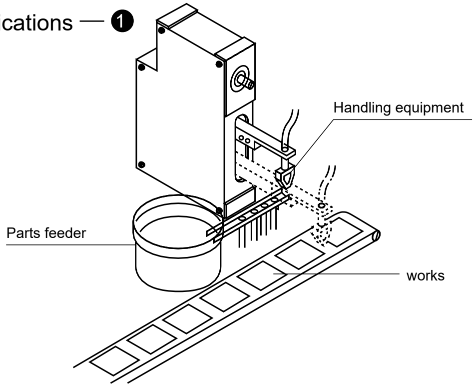

Using the handling attachment, parts from the parts feeder are transferred onto the conveyor line.

Applications — ❷

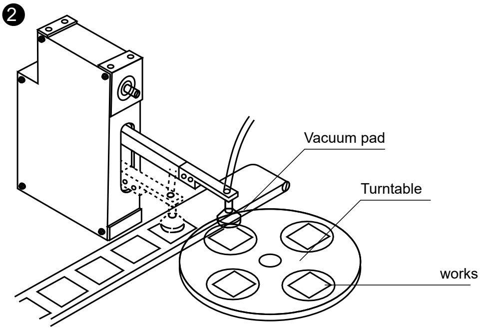

The vacuum pad attachment transfers parts on the straight conveyor line to a turntable to go to antoher process, and puts them back to the original line after the processing is done.

Type B (table type)

Applications — ❸

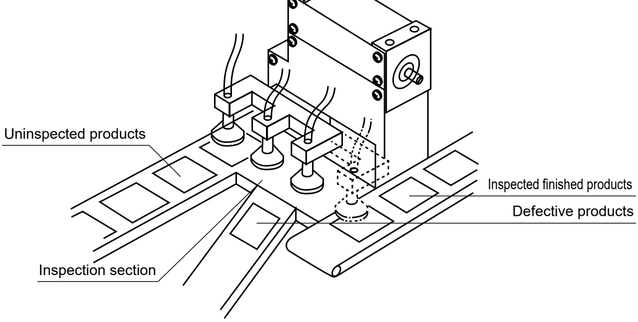

The attachment with 3 vacuum pads transfers uninspected products to the inspection process, and transfers the inspected products to the next process line while discarding the defective products.

PPLX Series
Size selection method

When you select specifications and model of a P&P drive, first determine the following primary specifications.

Operating conditions

- ● La stroke length
- ● Lb stroke length
- ● Index angle
- ● Input shaft speed
- ● Driving method

Load conditions

- ● Payload
- ● External load

Compare the actual payload calculated from the payload determined from above and the external load with the rated dynamic payload based on the La and Lb stroke sections, index angle and input shaft speed, and choose the size.

Size selection flow chart

START Determining the specifications

1. Operating conditions
2. Load conditions
3. Output section (type A and type B)

STEP -1 Calculating the actual payload

① -1 Actual payload: me
① -2 Payload: mi
① -3 Converted payload from friction: mf
① -4 Converted payload from work force: mw

STEP -2 Size selection

② -1 Provisionally selecting La stroke section by comparing the actual payload and the rated dynamic payload size: C_1
② -2 Provisionally selecting Lb stroke section by comparing the actual payload and the rated dynamic payload size: C_2
② -3 Selecting size

STEP -3

③ -1 Input shaft torque of La stroke section: Tc1
③ -2 Input shaft torque of Lb stroke section: Tc2
③ -3 Input shaft torque when overlapping

STEP -4

Selecting the worm reducer

STEP -5

Calculating the motor capacity

1 Calculating the actual payload

① - 1. Calculating the actual payload: me

The actual payload is the total of payload, converted payload from friction and converted payload from work force.

me = mi + mf + mw (kg)

Here, mi : Payload (kg)
mf : Converted payload from friction (kg)
mw : Converted payload from work force (kg)

① - 2. Payload: mi

This is the weight of the jig and workpiece determined for the specifications.

① - 3. Converted payload from friction: mf

Frictional force is the force which applies to the output arm or table because of friction of bearings and sliding surfaces, and this force is converted to payload.

$$mf = \frac{\mu \cdot F}{g} \text{ (kg)}$$

Here, g : Gravitational acceleration 9.81 m/s^2
F : Force applying to sliding surfaces and bearings (N)
μ : Coefficient of friction

Rolling friction	Sliding friction
μ = 0.03 to 0.05	μ = 0.1 to 0.3

① - 4. Converted payload from work force: mw

Work force is the external load which is applied to the output arm or table as load when the system is running, and this work force is converted to payload.

$$mw = \frac{Fw}{g} \text{ (kg)}$$

Here, Fw : Work force (N)
g : Gravitational acceleration 9.81 (m/s^2)

2 Size selection

Create a timing chart. Calculate the min. rated dynamic payload from the payload table for each lead range as Mm, and choose this value.

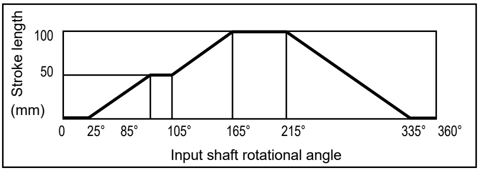

Compare the rated dynamic payload Mm and the actual payload me, and select the size.

Mm ≥ me (kg)

Here, Mm : Rated dynamic payload (kg)
me: Actual payload (kg)

② - 1. Provisionally selecting the size by comparing the rated dynamic payload of the La stroke section and the actual payload: C$_1$

Mma ≥ mea (kg)

Here, Mma : Rated dynamic payload of La stroke (kg)
mea: Actual payload of La stroke (kg)

② - 2. Provisionally selecting the size by comparing the rated dynamic payload of the Lb stroke section and the actual payload: C$_2$

Mmb ≥ meb (kg)

Here, Mmb : Rated dynamic payload of Lb stroke (kg)
meb: Actual payload of Lb stroke (kg)

② - 3. Selecting the size

Selecting the larger P&P size between C1 and C2, which are obtained by comparing the rated dynamic payload of La stroke and Lb stroke with the actual payload.

3 Calculating the input shaft torque

For general P&P motions, calculate the input shaft torque for La stroke section and Lb stroke section, and choose the larger value.

If La stroke motion and Lb stroke motion overlap, choose the sum of these 2 values.

③ - 1. Input shaft torque of La stroke section: Tc1

$$Tc1 = \frac{2.06 \times 10^{-3} \cdot Am \cdot Qm \cdot (mi+moa) \cdot Loa^{2} \cdot N^{2}}{\theta h^{3}} + \frac{0.057 \cdot Vm \cdot \{(mi+moa) \times 9.81 + Ff + Fw\} \cdot Loa}{\theta h} + Tin$$

③ - 2. Input shaft torque of Lb stroke section: Tc2

$$Tc2 = \frac{2.06 \times 10^{-3} \cdot Am \cdot Qm \cdot (mi+mob) \cdot Lob^{2} \cdot N^{2}}{\theta h^{3}} + \frac{0.057 \cdot Vm \cdot \{(mi+mob) \times 9.81 + Ff + Fw\} \cdot Lob}{\theta h} + Tin$$

Here, Loa : La stroke (mm)
Lob : Lb stroke (mm)
N : Input shaft rotational speed (rpm)
θh : Index angle (°)
moa : Internal weight of La stroke section (kg)
mob : Internal weight of Lb stroke section (kg)
Ff : Frictional force (N)
Fw : work force (N)
Am : 5.53
Vm : 1.76
Qm : 0.99
Tin : Internal frictional torque (N·m)

③ - 3. Input shaft torque when overlapping: Tc

$$Tc = Tc1 + Tc2 - Tin$$

(CAUTION)

(1) Calculate (mi + moa) × 9.81 and
(mi + mob) × 9.81 in the formula
only when the direction of motion is the same as gravity.

(2) The input shaft torque obtained here is a torque required to drive the P&P drive. You also have to consider a torque externally applied as load to the input shaft.

Example

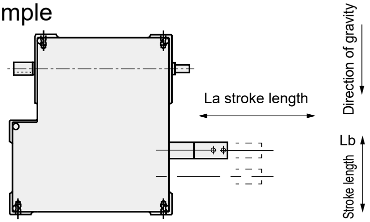

* You just have to calculate this for Lb stroke; there is no need to calculate this for La stroke.

4 Selecting the worm reducer

Calculate a torque Ter of the output shaft of the reducer (TE series) using the following formula.

$$Ter = Tc \cdot fr \text{ (N·m)}$$

Here, Ter : Load torque (N·m) of the reducer

Tc: PPLX input shaft torque (N·m)

fr: Reducer usage factor

	Operational hours per day		
	2 time	10 time	24 time
Continuous operation	0.90	1.25	1.50
Intermittent operation	1.25	1.50	1.75

Compare Ter obtained here in the worm reducer (TE series) rated output torque table to verify that the reducer can be used in combination with the P&P drive.
If Ter is greater than the worm reducer rated output torque in the standard combination, the size of the reducer should be increased. For details, contact CKD.

5 Calculating the motor capacity

You can obtain the motor capacity for the P&P drive itself from the input shaft torque and input shaft rotational speed of the P&P drive.

$$P = \frac{Tc \cdot N}{9550 \cdot \eta} \text{ (kW)}$$

Here, P : motor capacity (kW)

Tc: Input shaft torque (N·m)

N: Input shaft rotational speed (rpm)

η: Efficiency of the reducer ($\eta < 1$)

* Add Pr (motor capacity of the worm reducer itself) to the above formula when you use a work reducer.

$$Pr = \frac{Tinr \cdot Nr}{9550} \text{ (kW)}$$

Here, Tinr = Internal frictional torque of the reducer (N·m).

TE reducer size	Oil level			
	5°C	10°C	15°C	20°C
TE35	0.38	0.33	0.29	0.26
TE42	0.61	0.52	0.45	0.40

Nr: Worm shaft rotational speed (rpm)

- When we make calculations, we assume the oil temperature to be 10 degrees C unless otherwise stated.

- When you use a worm reducer other than TE series, add to Pr the value obtained by converting the internal frictional torque given in the technical data into the motor capacity.

- In addition, since the viscosity of the lubricating oil in the reducer becomes high in the cold climate region or during cold winter mornings, a higher motor capacity will become necessary. As a result, the motor capacity may become insufficient. This may lead to a speed lower than expected, or in the worst case, the motor may become unable to start or get seized.

- Therefore, select a motor with sufficient margin for the calculation.

PPLX

Specification check sheet for selecting a P&P drive

Date

CKD Corporation
TO:

Company name: Name:

Department/Section:

TEL: FAX:

Operating conditions

1. Output section: ☐ Type A ☐ Type B
2. Installation position: ☐ 1 ☐ 2
3.La stroke length : Loa = ☐ mm
4.Lb stroke length : Lob = ☐ mm
5. Input shaft rotating direction: ☐ Direction a ☐ Direction b
6. Input shaft rotational speed N = ☐ rpm
7. Input shaft driving method: ☐ Worm reducer direct connection (with TE reducer)
☐ Geared motor
8. Timing chart

* Create the timing chart referring to the following points.
- Input shaft reference point (keyway position)
- Input shaft rotating direction
- Relationship between the output sections 1, 2, 3 and 4, positions and the input shaft rotational angle

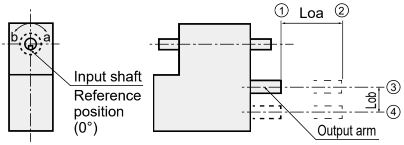

A type

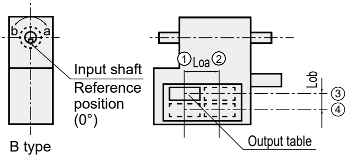

B type

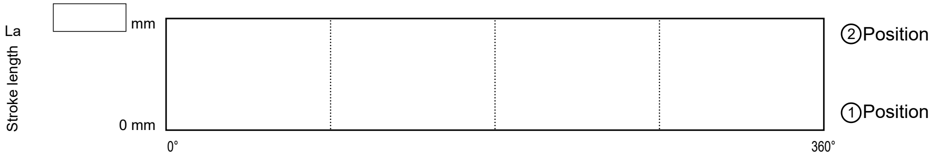

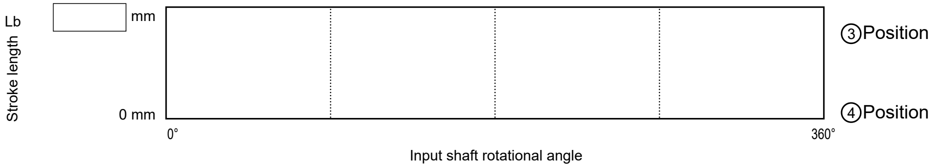

Load conditions and others

MEMO

How to order

PPLX 080 - 060 030 - A - 1 - X012345
Ⓐ Ⓑ Ⓒ Ⓓ Ⓔ Ⓕ Ⓖ

Ⓐ Model No.	Ⓑ Size	Ⓒ Horizontal stroke (La)		Ⓓ Vertical stroke (Lb)	
PPLX	040 050 063 080	010 to 200	10 mm to 200 mm	005 to 060	5 mm to 60 mm

About Input shaft specifications

Standard

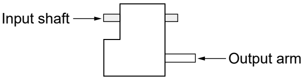

With the worm reducer

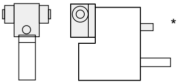

* The specification of the worm reducer (TE reducer) to be mounted is required.

With C/B motor

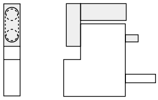

With input shaft position detection cam and photo micro sensor

Ⓔ	Output type	Ⓕ	Installation position	Ⓖ Special specification No.
A	Type A: Arm 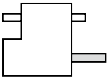	1	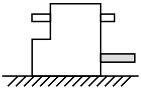 Direction of gravity ↓	* To place an order for a P&P drive, a "Special specification number" is required. The special specification model number shall be determined after a consultation with the customer. Mounting options are available upon request. Please provide CKD with the specifications.
B	Type B: Table type 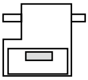	2	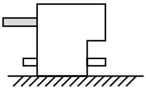 Contact CKD for details.	

*The standard cam curve for PPLX Series is the MS curve.

Worm reducer installation specification

Standard reducer size		Reduction ratio	Clutch/Brake:	Mounting direction	
P&P drive Size	TE reducer size	1 / 10 1 / 20 1 / 30 1 / 40 1 / 50 1 / 60	Clutch/Brake Yes	A 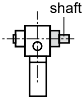	J 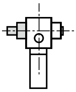
PPLX040	TE35				
PPLX050	TE35		Clutch/Brake No	L 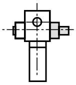	C 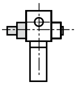
PPLX063	TE42				
PPLX080	TE42				

* Mounting positions L and C are not available for PPLX040.

Dimensions

● PPLX040A (arm)

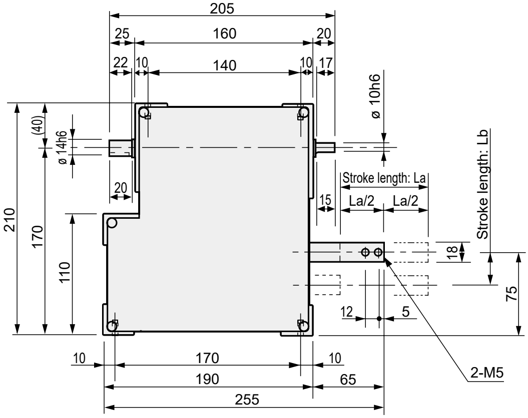

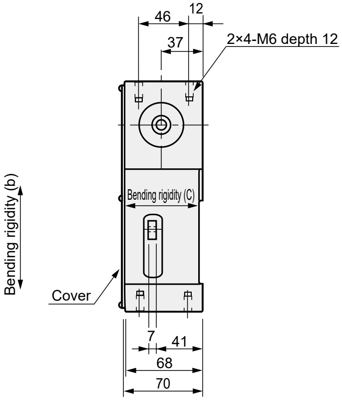

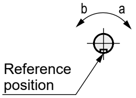

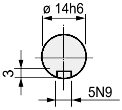

Input shaft (drive side)

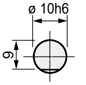

Input shaft (detection side)

Dimensions with options

With C/B motor + photo micro sensor

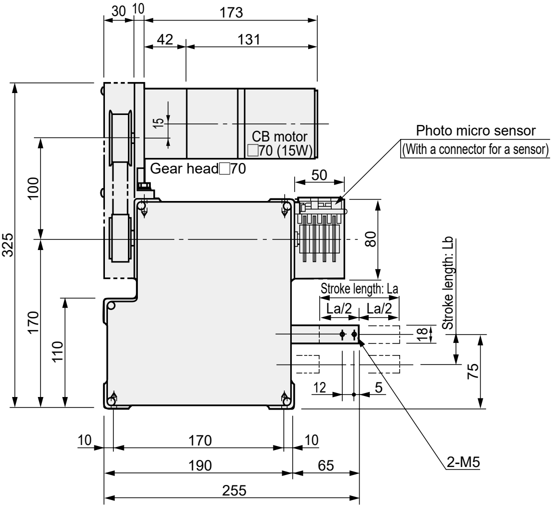

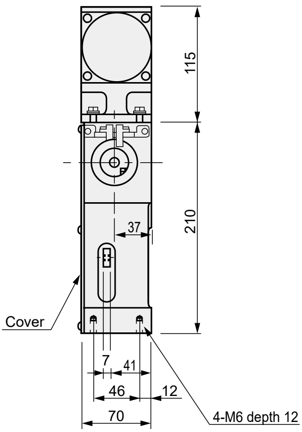

Characteristics

Descriptions		Characteristics
La stroke length mm		max.80
Lb stroke length mm		max.30
Internal weight of La stroke section (moa) kg		0.5
Internal weight of Lb stroke section (mob) kg		1.0
Bending rigidity of the output section	b direction mm/N	0.004
	c direction mm/N	0.015
Lubrication method		Grease lubrication

Descriptions	Characteristics
Allowable thrust force N of the input shaft	800
Allowable radial force N for the input shaft	750
Moment of inertia of the input shaft kg·m^2	2.7 × 10^{-4}
Internal frictional torque (Tin) N·m	1.9
Repeatability mm	±0.02
Product weight kg	10
Paint color	Silver

Rated dynamic payload table

Stroke direction	Stroke length (mm)	Index angle (°)	Rated dynamic payload (kg)							
			Input shaft rotational speed (rpm)							
			20	30	40	50	60	80	100	120
La	10	24	2.9	2.5	2.2	2.0	1.7	1.3	0.8	0.4
		35	3.3	2.8	2.6	2.3	2.1	1.8	1.6	1.3
	15	30	2.5	2.1	1.9	1.7	1.5	1.2	0.7	0.4
		40	2.7	2.3	2.1	1.9	1.7	1.5	1.2	1.0
	20	34	2.2	1.9	1.6	1.5	1.3	1.0	0.6	0.3
		45	2.3	2.0	1.8	1.7	1.5	1.3	1.1	0.9
	25	38	2.0	1.7	1.5	1.3	1.2	1.0	0.6	0.2
		50	2.1	1.9	1.7	1.5	1.4	1.2	1.0	0.8
	30	41	1.8	1.6	1.4	1.2	1.1	0.9	0.5	0.2
		50	1.9	1.7	1.5	1.3	1.2	1.0	0.8	0.6
	35	44	1.7	1.5	1.3	1.2	1.0	0.8	0.5	0.2
		55	1.8	1.6	1.4	1.3	1.2	1.0	0.8	0.6
	40	47	1.6	1.4	1.2	1.1	1.0	0.8	0.4	0.1
		55	1.7	1.5	1.3	1.2	1.1	0.9	0.7	0.4
	45	50	1.6	1.3	1.2	1.0	0.9	0.7	0.4	0.1
		60	1.6	1.4	1.3	1.1	1.0	0.8	0.7	0.4
	50	52	1.5	1.3	1.1	1.0	0.9	0.7	0.3	0.1
		60	1.5	1.3	1.2	1.1	1.0	0.8	0.6	0.3
	55	57	1.5	1.3	1.1	1.0	0.9	0.7	0.4	0.1
		65	1.5	1.3	1.2	1.0	0.9	0.8	0.6	0.3
	60	62	1.4	1.2	1.1	1.0	0.9	0.7	0.5	0.2
		70	1.5	1.3	1.1	1.0	0.9	0.8	0.6	0.4
	65	69	1.4	1.2	1.1	1.0	0.9	0.7	0.6	0.3
		80	1.4	1.2	1.1	1.0	0.9	0.8	0.7	0.6
	70	75	1.4	1.2	1.1	0.9	0.9	0.7	0.6	0.3
		85	1.4	1.2	1.1	1.0	0.9	0.8	0.6	0.5
	75	80	1.3	1.2	1.0	0.9	0.8	0.7	0.6	0.4
		90	1.4	1.2	1.1	1.0	0.9	0.8	0.6	0.5
	80	84	1.3	1.1	1.0	0.9	0.8	0.7	0.6	0.4
		95	1.3	1.2	1.0	1.0	0.9	0.7	0.6	0.5
Lb	5	24	3.5	3.0	2.7	2.5	2.3	1.9	1.7	1.1
		35	3.9	3.4	3.1	2.9	2.7	2.4	2.1	1.9
	10	31	2.5	2.2	2.0	1.8	1.6	1.4	1.1	0.6
		40	2.7	2.4	2.1	2.0	1.8	1.6	1.4	1.2
	15	38	2.1	1.9	1.7	1.5	1.4	1.2	1.0	0.5
		50	2.3	2.0	1.8	1.7	1.5	1.3	1.2	1.0
	20	43	1.9	1.6	1.5	1.3	1.2	1.0	0.8	0.3
		55	2.0	1.8	1.6	1.4	1.3	1.2	1.0	0.9
	25	50	1.7	1.5	1.4	1.2	1.1	0.9	0.8	0.3
		60	1.8	1.6	1.4	1.3	1.2	1.0	0.9	0.8
	30	54	1.6	1.4	1.3	1.1	1.0	0.9	0.7	0.2
		65	1.7	1.5	1.3	1.2	1.1	1.0	0.8	0.7

Dimensions

● PPLX050A (arm)

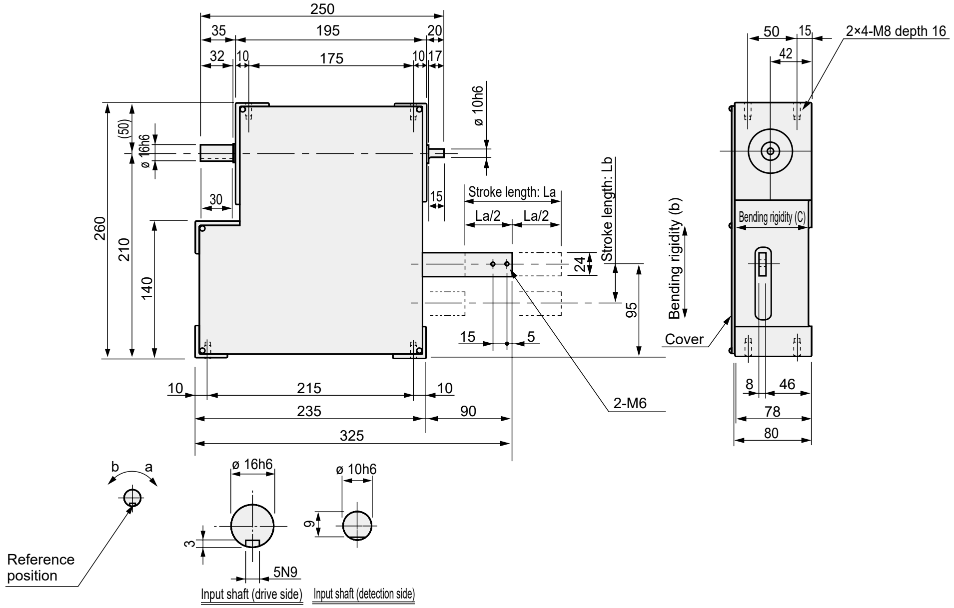

Dimensions with options

With C/B motor + photo micro sensor

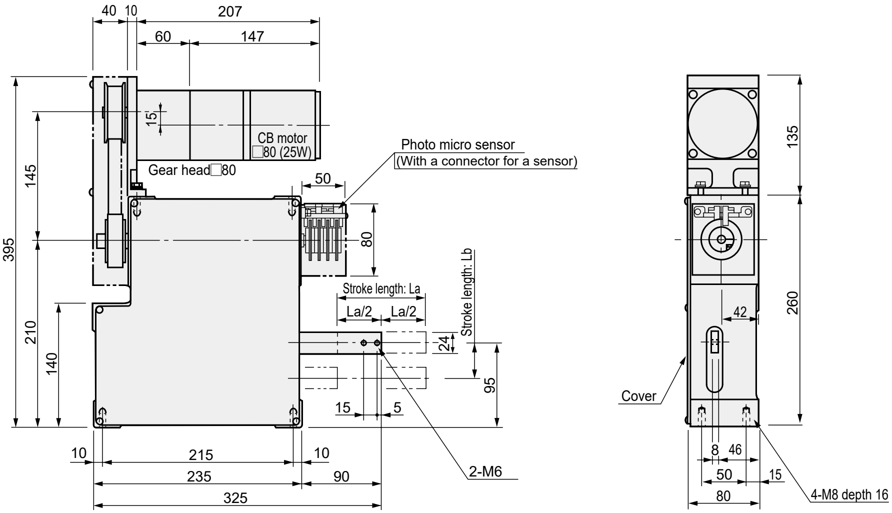

Characteristics

Descriptions		Characteristics
La stroke length mm		max.100
Lb stroke length mm		max.40
Internal weight of La stroke section (moa) kg		0.8
Internal weight of Lb stroke section (mob) kg		1.8
Bending rigidity of the output section	b direction mm/N	0.0035
	c direction mm/N	0.0150
Lubrication method		Grease lubrication

Descriptions	Characteristics
Allowable thrust force N of the input shaft	1200
Allowable radial force N for the input shaft	900
Moment of inertia of the input shaft kg·m^2	7.3 × 10^{-4}
Internal frictional torque (Tin) N·m	3.0
Repeatability mm	±0.02
Product weight kg	15
Paint color	Silver

Rated dynamic payload table

Stroke direction	Stroke length (mm)	Index angle (°)	Rated dynamic payload (kg)						
			Input shaft rotational speed (rpm)						
			20	30	40	50	60	80	100
La	10	22	4.0	3.4	3.0	2.6	2.3	1.7	0.7
		30	4.4	3.9	3.4	3.1	2.8	2.4	2.0
	20	30	3.0	2.5	2.2	1.9	1.7	1.3	0.5
		40	3.2	2.8	2.5	2.2	2.0	1.7	1.4
	30	37	2.5	2.1	1.9	1.6	1.4	1.1	0.4
		45	2.7	2.3	2.0	1.8	1.6	1.3	1.1
	40	42	2.2	1.9	1.6	1.4	1.3	1.0	0.3
		50	2.3	2.0	1.8	1.6	1.4	1.1	0.9
	50	47	2.0	1.7	1.5	1.3	1.2	0.9	0.2
		55	2.1	1.8	1.6	1.4	1.3	1.0	0.7
	60	52	1.9	1.6	1.4	1.2	1.1	0.8	0.2
		60	2.0	1.7	1.5	1.3	1.2	1.0	0.6
	70	58	1.8	1.5	1.3	1.2	1.0	0.8	0.2
		70	1.9	1.6	1.4	1.3	1.2	0.9	0.8
	80	65	1.7	1.5	1.3	1.2	1.0	0.8	0.3
		75	1.8	1.5	1.4	1.2	1.1	0.9	0.7
	90	75	1.7	1.4	1.3	1.1	1.0	0.8	0.5
		85	1.7	1.5	1.3	1.2	1.1	0.9	0.7
	100	82	1.6	1.4	1.2	1.1	1.0	0.8	0.6
		90	1.7	1.4	1.3	1.2	1.0	0.9	0.7
Lb	10	27	3.6	3.1	2.7	2.5	2.2	1.8	0.9
		35	3.9	3.4	3.0	2.8	2.5	2.2	1.9
	20	38	2.7	2.3	2.0	1.8	1.7	1.4	0.6
		50	2.9	2.5	2.3	2.1	1.9	1.6	1.4
	30	46	2.3	2.0	1.7	1.5	1.4	1.1	0.2
		55	2.4	2.0	1.8	1.7	1.5	1.3	1.1
	40	54	2.0	1.7	1.5	1.4	1.3	1.0	0.1
		65	2.1	1.8	1.6	1.5	1.4	1.1	1.0

Product specifications
Compact
Standard
Table
Wide angle
Basic
Roller gear cam drive
Parallel cam drive
Circular
Linear
Pick and Place drive
Option

Dimensions

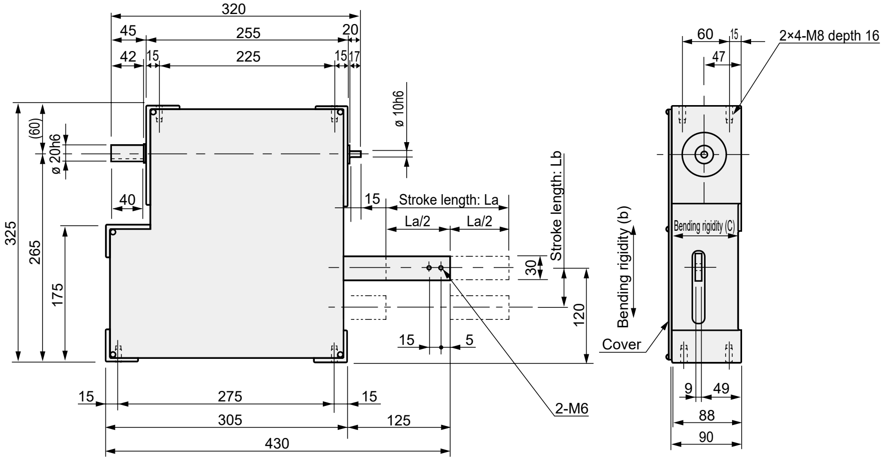

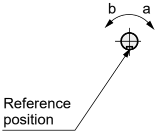

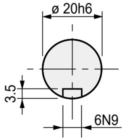

Input shaft (drive side)

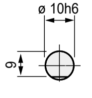

Input shaft (detection side)

Dimensions with options

With C/B motor + photo micro sensor

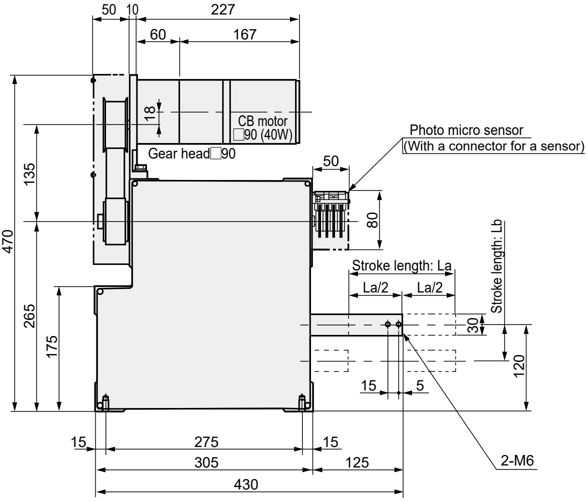

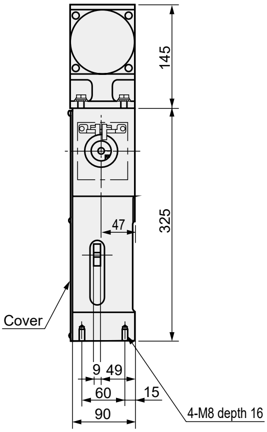

Characteristics

Descriptions		Characteristics
La stroke length mm		max.150
Lb stroke length mm		max.50
Internal weight of La stroke section (moa) kg		1.7
Internal weight of Lb stroke section (mob) kg		3.0
Bending rigidity of the output section	b direction mm/N	0.003
	c direction mm/N	0.020
Lubrication method		Grease lubrication

Descriptions	Characteristics
Allowable thrust force N of the input shaft	2000
Allowable radial force N for the input shaft	1600
Moment of inertia of the input shaft kg·m^2	2.4 × 10^{-4}
Internal frictional torque (Tin) N·m	4.8
Repeatability mm	±0.02
Product weight kg	25
Paint color	Silver

Rated dynamic payload table

Stroke direction	Stroke length (mm)	Index angle (°)	Rated dynamic payload (kg)							
			Input shaft rotational speed (rpm)							
			10	20	30	40	50	60	70	80
La	10	21	8.0	6.4	5.4	4.7	4.1	3.6	3.2	2.8
	20	30	6.0	4.7	4.0	3.5	3.1	2.7	2.4	2.1
	30	36	5.0	4.0	3.4	2.9	2.6	2.3	2.0	1.8
	40	41	4.4	3.5	3.0	2.6	2.3	2.0	1.7	1.5
	50	46	4.0	3.2	2.7	2.4	2.1	1.8	1.6	1.4
	60	50	3.7	3.0	2.5	2.2	1.9	1.7	1.5	1.3
	70	54	3.5	2.8	2.4	2.1	1.8	1.6	1.4	1.2
	80	58	3.3	2.6	2.2	2.0	1.7	1.5	1.3	1.2
	90	60	3.2	2.5	2.1	1.8	1.6	1.4	1.2	1.1
	100	64	3.1	2.4	2.1	1.8	1.6	1.4	1.2	1.0
	110	71	3.0	2.4	2.0	1.8	1.5	1.4	1.2	1.1
	120	77	2.9	2.3	2.0	1.7	1.5	1.3	1.2	1.1
	130	84	2.8	2.3	1.9	1.7	1.5	1.3	1.2	1.1
	140	92	2.8	2.2	1.9	1.7	1.5	1.3	1.2	1.1
	150	99	2.7	2.2	1.9	1.7	1.5	1.3	1.2	1.1
Lb	10	27	6.7	5.4	4.6	4.1	3.7	3.3	3.0	2.7
	20	37	5.0	4.0	3.4	3.0	2.7	2.4	2.2	2.0
	30	45	4.2	3.3	2.9	2.6	2.3	2.1	1.9	1.7
	40	52	3.7	3.0	2.6	2.3	2.0	1.8	1.6	1.5
	50	58	3.4	2.7	2.3	2.1	1.9	1.7	1.5	1.4

Dimensions

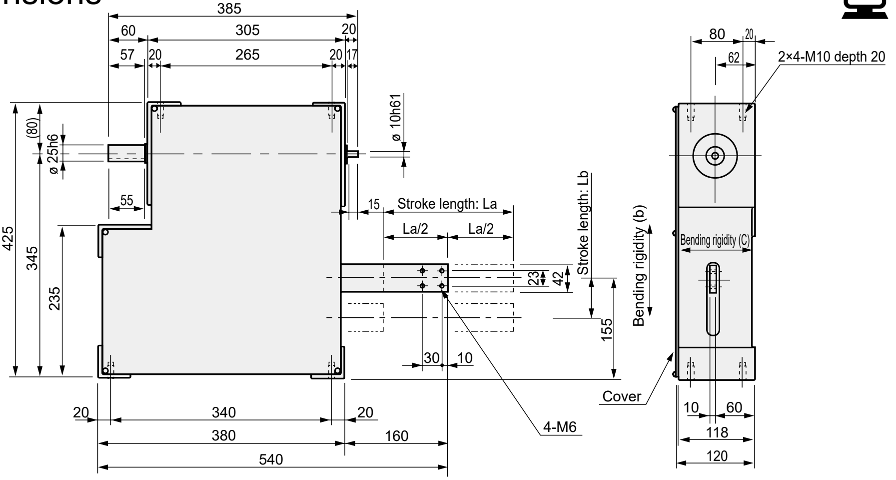

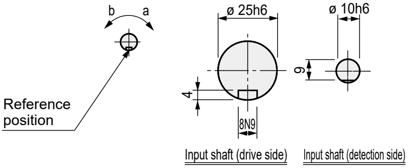

Dimensions with options

With C/B motor + photo micro sensor

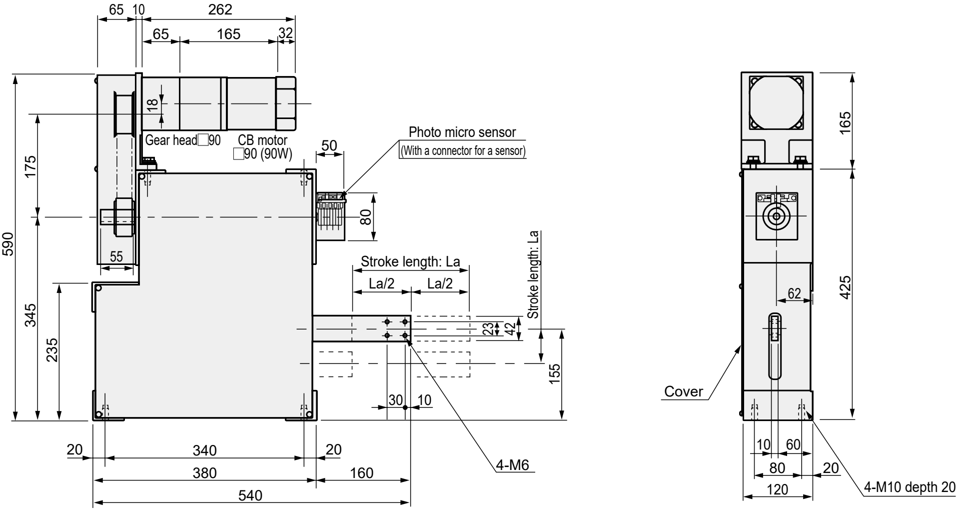

Characteristics

Descriptions		Characteristics
La stroke length mm		max.200
Lb stroke length mm		max.60
Internal weight of La stroke section (moa) kg		3.2
Internal weight of Lb stroke section (mob) kg		5.3
Bending rigidity of the output section	b direction mm/N	0.0025
	c direction mm/N	0.0250
Lubrication method		Grease lubrication

Descriptions	Characteristics
Allowable thrust force N of the input shaft	2500
Allowable radial force N for the input shaft	2700
Moment of inertia of the input shaft kg·m^2	8.6 × 10^{-3}
Internal frictional torque (Tin) N·m	7.8
Repeatability mm	±0.02
Product weight kg	50
Paint color	Silver

Rated dynamic payload table

Stroke direction	Stroke length (mm)	Index angle (°)	Rated dynamic payload (kg)							
			Input shaft rotational speed (rpm)							
			10	20	30	40	50	60	70	80
La	10	20	11.2	8.9	7.5	6.5	5.7	5.0	4.4	3.8
	20	28	8.2	6.5	5.5	4.8	4.2	3.6	3.2	2.8
	30	33	6.9	5.4	4.6	3.9	3.4	3.0	2.6	2.3
	40	38	6.1	4.8	4.0	3.5	3.0	2.6	2.3	2.0
	50	43	5.5	4.4	3.7	3.2	2.8	2.4	2.1	1.8
	60	47	5.1	4.0	3.4	2.9	2.6	2.2	1.9	1.7
	70	50	4.8	3.8	3.2	2.7	2.4	2.1	1.8	1.6
	80	53	4.5	3.6	3.0	2.6	2.2	1.9	1.7	1.5
	90	57	4.3	3.4	2.9	2.5	2.2	1.9	1.6	1.4
	100	60	4.2	3.3	2.8	2.4	2.1	1.8	1.6	1.4
	110	62	4.0	3.1	2.6	2.3	2.0	1.7	1.5	1.3
	120	65	3.9	3.0	2.6	2.2	1.9	1.7	1.4	1.3
	130	68	3.7	2.9	2.5	2.1	1.9	1.6	1.4	1.2
	140	70	3.6	2.9	2.4	2.1	1.8	1.6	1.4	1.2
	150	73	3.5	2.8	2.4	2.0	1.8	1.5	1.3	1.2
	160	78	3.5	2.7	2.3	2.0	1.7	1.5	1.3	1.2
	170	83	3.4	2.7	2.3	2.0	1.7	1.5	1.3	1.2
	180	88	3.4	2.7	2.3	2.0	1.7	1.5	1.3	1.2
	190	94	3.3	2.6	2.2	1.9	1.7	1.5	1.3	1.2
	200	99	3.3	2.6	2.2	1.9	1.7	1.5	1.3	1.2
Lb	10	27	8.9	7.2	6.2	5.5	4.9	4.4	4.0	3.6
	20	36	6.5	5.2	4.5	4.0	3.5	3.2	2.9	2.6
	30	44	5.5	4.4	3.8	3.3	3.0	2.7	2.4	2.2
	40	51	4.9	3.9	3.4	3.0	2.7	2.4	2.1	1.9
	50	57	4.4	3.5	3.1	2.7	2.4	2.2	2.0	1.8
	60	63	4.1	3.3	2.8	2.5	2.2	2.0	1.8	1.6

Dimensions

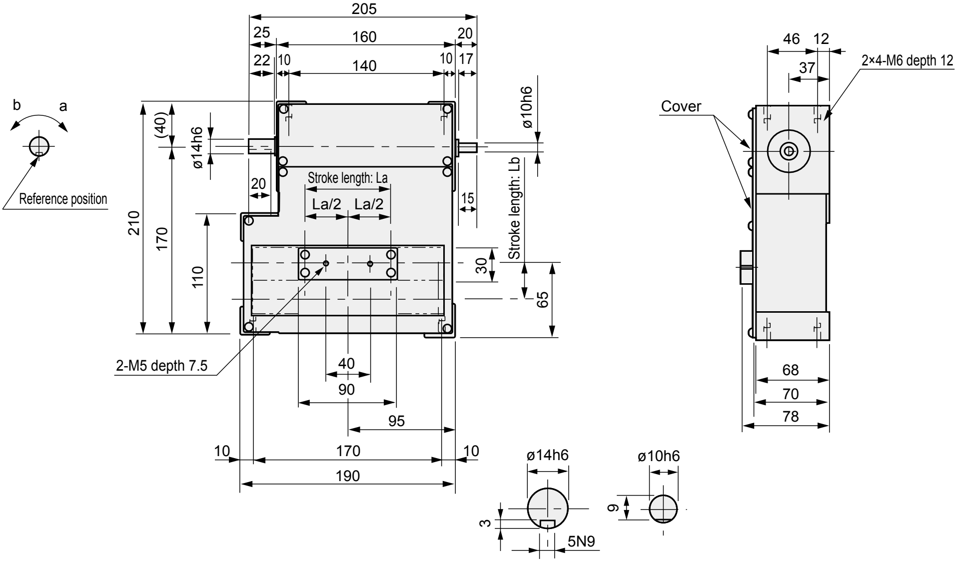

Input shaft (drive side)

Input shaft (detection side)

Dimensions with options

Hollow shaft geared motor (40 W) + micro sensor

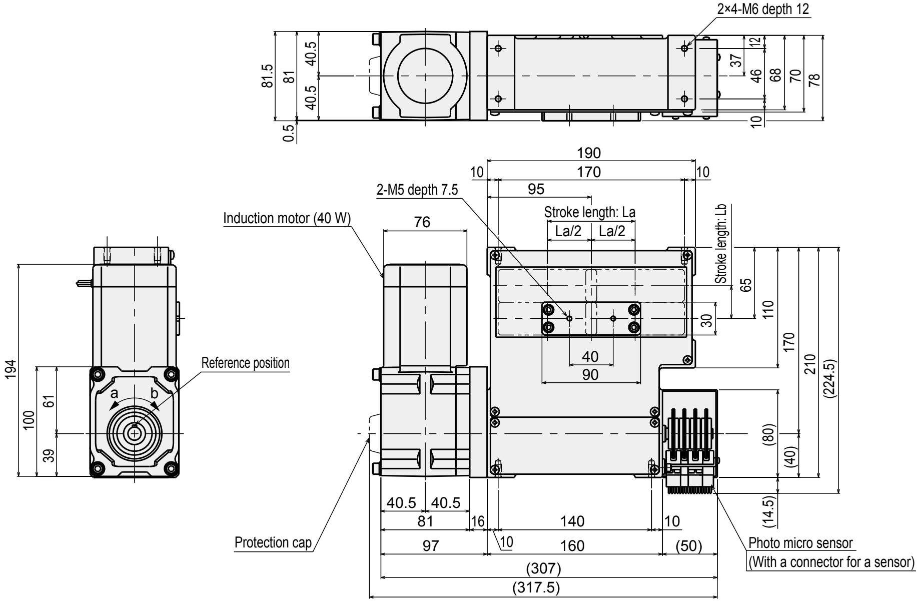

Characteristics

Descriptions	Characteristics
La stroke length mm	max.80
Lb stroke length mm	max.30
Internal weight of La stroke section (moa) kg	0.6
Internal weight of Lb stroke section (mob) kg	1.2
Product weight kg	10
Lubrication method	Grease lubrication

Descriptions	Characteristics
Allowable thrust force N of the input shaft	800
Allowable radial force N for the input shaft	750
Moment of inertia of the input shaft kg·m^2	2.7 × 10^{-4}
Internal frictional torque (Tin) N·m	1.9
Repeatability mm	±0.02
Paint color	Silver

Rated dynamic payload table

Stroke direction	Stroke length (mm)	Index angle (°)	Rated dynamic payload (kg)							
			Input shaft rotational speed (rpm)							
			20	30	40	50	60	80	100	120
La	10	24	3.8	3.3	2.9	2.6	2.3	1.2	0.6	0.2
		35	4.3	3.7	3.4	3.1	2.8	2.4	1.9	1.2
	15	30	3.7	3.2	2.8	2.5	2.2	1.2	0.6	0.2
		40	4.0	3.5	3.1	2.8	2.6	2.2	1.5	0.9
	20	34	3.5	3.0	2.7	2.4	2.0	1.1	0.5	0.2
		45	3.8	3.3	3.0	2.7	2.5	2.1	1.4	0.8
	25	38	3.4	3.0	2.6	2.3	1.9	1.0	0.5	0.1
		50	3.7	3.2	2.9	2.6	2.4	2.0	1.3	0.7
	30	41	3.4	2.9	2.5	2.3	1.7	0.9	0.4	0.1
		50	3.5	3.1	2.7	2.5	2.2	1.6	0.9	0.5
	35	44	3.3	2.8	2.5	2.2	1.6	0.8	0.3	-
		55	3.5	3.0	2.7	2.4	2.2	1.6	0.9	0.5
	40	47	3.3	2.8	2.5	2.2	1.5	0.7	0.3	-
		55	3.4	2.9	2.6	2.3	2.1	1.3	0.7	0.3
	45	50	3.2	2.8	2.4	2.1	1.5	0.7	0.3	-
		60	3.4	2.9	2.6	2.3	2.1	1.3	0.7	0.3
	50	52	3.2	2.7	2.4	1.9	1.3	0.6	0.2	-
		60	3.3	2.8	2.5	2.3	2.0	1.1	0.6	0.2
	55	57	3.2	2.8	2.4	2.1	1.5	0.7	0.3	-
		65	3.3	2.8	2.5	2.3	2.1	1.1	0.6	0.2
	60	62	3.2	2.8	2.4	2.2	1.6	0.8	0.3	0.1
		70	3.3	2.8	2.5	2.3	2.1	1.2	0.7	0.3
	65	69	3.2	2.8	2.5	2.2	1.8	1.0	0.5	0.1
		80	3.3	2.9	2.6	2.3	2.1	1.5	0.9	0.4
	70	75	3.2	2.8	2.5	2.2	2.0	1.1	0.6	0.2
		85	3.3	2.9	2.6	2.3	2.1	1.6	0.9	0.5
	75	80	3.2	2.8	2.5	2.3	2.0	1.1	0.6	0.2
		90	3.3	2.9	2.6	2.3	2.1	1.6	1.0	0.5
	80	84	3.2	2.8	2.5	2.3	2.0	1.2	0.6	0.3
		95	3.3	2.9	2.6	2.3	2.2	1.7	1.0	0.5
Lb	5	24	4.1	3.6	3.2	2.9	2.7	2.3	1.8	0.9
		35	4.6	4.0	3.6	3.4	3.1	2.8	2.5	2.2
	10	31	3.6	3.2	2.8	2.6	2.3	2.0	1.1	0.4
		40	3.9	3.4	3.1	2.8	2.6	2.3	2.0	1.4
	15	38	3.5	3.0	2.7	2.4	2.2	1.9	0.9	0.2
		50	3.7	3.3	2.9	2.7	2.5	2.2	1.9	1.4
	20	43	3.4	2.9	2.6	2.4	2.1	1.7	0.7	0.1
		55	3.5	3.1	2.8	2.6	2.4	2.0	1.8	1.0
	25	50	3.3	2.9	2.6	2.3	2.1	1.7	0.7	0.1
		60	3.4	3.0	2.7	2.5	2.3	2.0	1.6	0.7
	30	54	3.2	2.8	2.5	2.3	2.1	1.4	0.5	-
		65	3.4	2.9	2.6	2.4	2.2	1.9	1.3	0.6

Dimensions

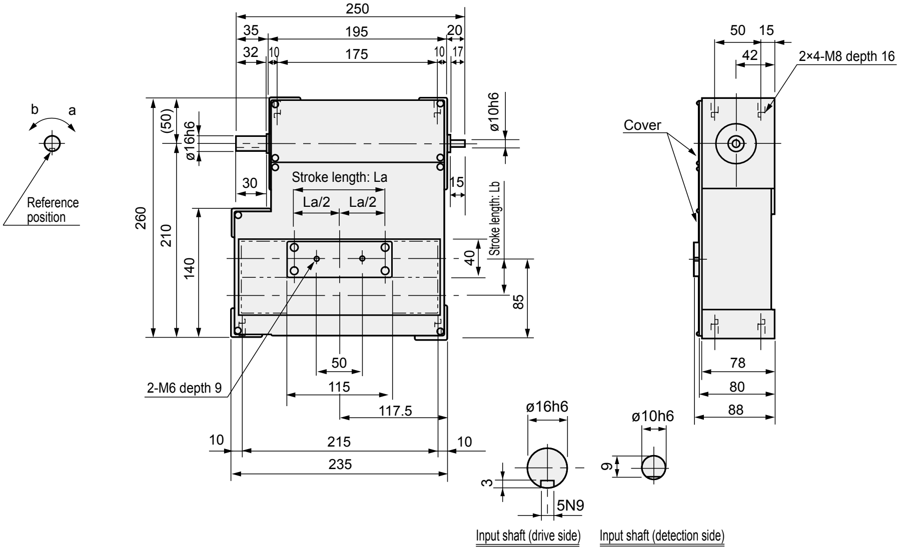

Dimensions with options

Hollow shaft geared motor (100 W) + micro sensor

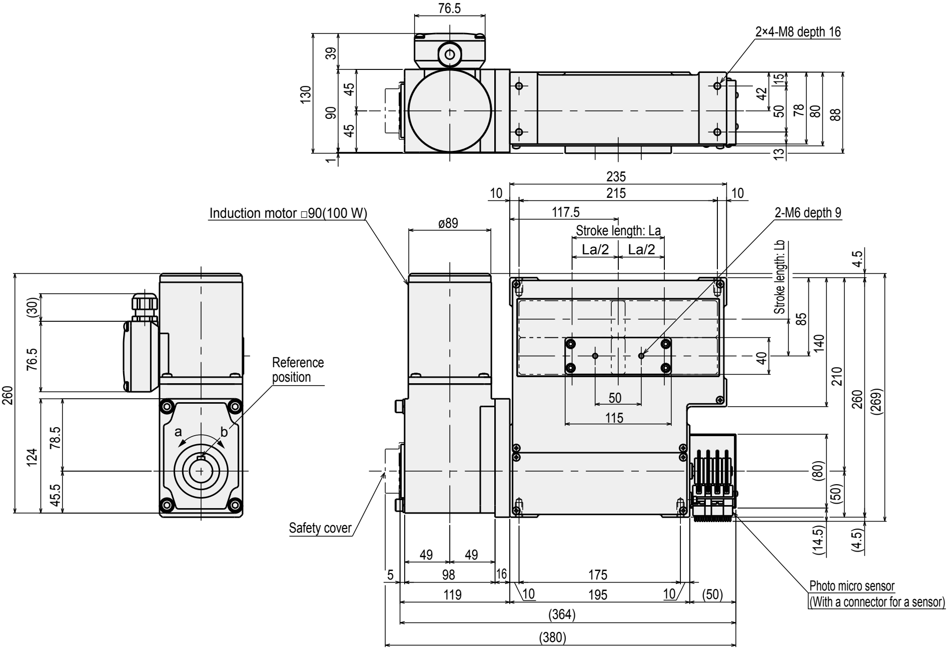

Characteristics

Descriptions	Characteristics
La stroke length mm	max.100
Lb stroke length mm	max.40
Internal weight of La stroke section (moa) kg	1.1
Internal weight of Lb stroke section (mob) kg	2.3
Product weight kg	15
Lubrication method	Grease lubrication

Descriptions	Characteristics
Allowable thrust force N of the input shaft	1200
Allowable radial force N for the input shaft	900
Moment of inertia of the input shaft $kg \cdot m^2$	7.3×10^{-4}
Internal frictional torque (Tin) N·m	3.0
Repeatability mm	±0.02
Paint color	Silver

Rated dynamic payload table

Stroke direction	Stroke length (mm)	Index angle (°)	Rated dynamic payload (kg)						
			Input shaft rotational speed (rpm)						
			20	30	40	50	60	80	100
La	10	22	5.0	4.2	3.7	3.3	2.9	1.5	0.5
		30	5.5	4.8	4.2	3.8	3.5	2.9	1.8
	20	30	4.5	3.8	3.3	2.9	2.6	1.1	0.3
		40	4.9	4.2	3.8	3.4	3.1	2.5	1.4
	30	37	4.3	3.7	3.2	2.8	2.5	1.0	0.2
		45	4.5	3.9	3.5	3.1	2.8	2.0	0.9
	40	42	4.2	3.5	3.1	2.7	2.2	0.8	0.1
		50	4.4	3.7	3.3	3.0	2.6	1.6	0.6
	50	47	4.1	3.5	3.0	2.6	2.1	0.7	-
		55	4.2	3.6	3.2	2.9	2.6	1.4	0.5
	60	52	4.0	3.4	3.0	2.6	1.9	0.6	-
		60	4.2	3.6	3.1	2.8	2.5	1.3	0.4
	70	58	4.0	3.4	3.0	2.6	2.0	0.7	-
		70	4.2	3.6	3.2	2.9	2.6	1.6	0.6
	80	65	4.0	3.4	3.0	2.7	2.2	0.8	0.1
		75	4.1	3.5	3.1	2.8	2.5	1.5	0.6
	90	75	4.0	3.5	3.1	2.7	2.4	1.1	0.3
		85	4.1	3.6	3.2	2.9	2.6	1.8	0.8
	100	82	4.0	3.5	3.1	2.7	2.5	1.2	0.3
		90	4.1	3.5	3.1	2.8	2.6	1.7	0.7
Lb	10	27	4.7	4.1	3.6	3.2	2.9	2.0	0.4
		35	5.1	4.4	4.0	3.6	3.3	2.9	2.2
	20	38	4.3	3.8	3.3	3.0	2.7	1.4	0.1
		50	4.7	4.1	3.7	3.3	3.1	2.6	1.9
	30	46	4.1	3.6	3.2	2.8	2.6	0.9	-
		55	4.3	3.8	3.4	3.0	2.8	2.3	0.7
	40	54	4.0	3.5	3.1	2.8	2.5	0.6	-
		65	4.2	3.7	3.3	3.0	2.7	2.1	0.6

Dimensions

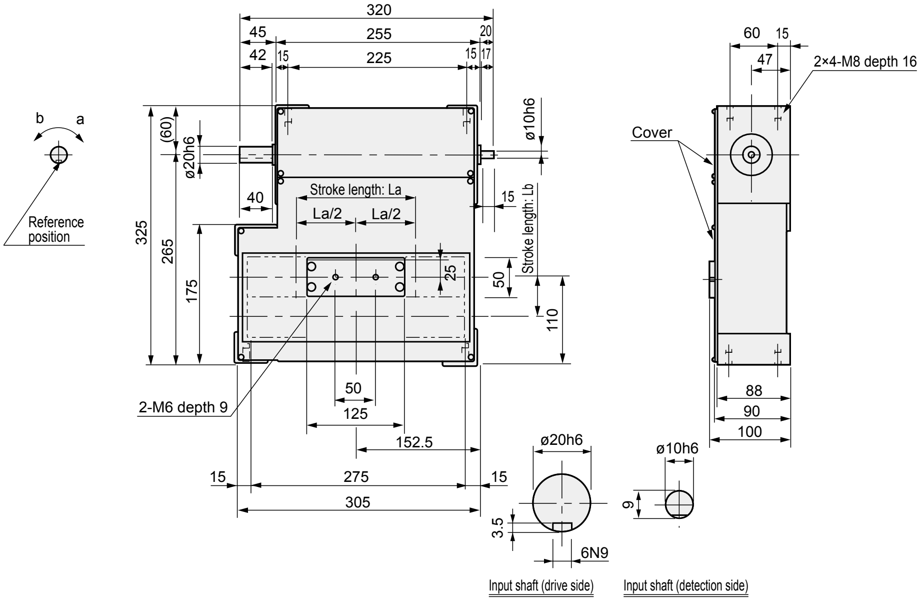

Input shaft (drive side)

Input shaft (detection side)

Dimensions with options

Hollow shaft geared motor (100 W) + micro sensor

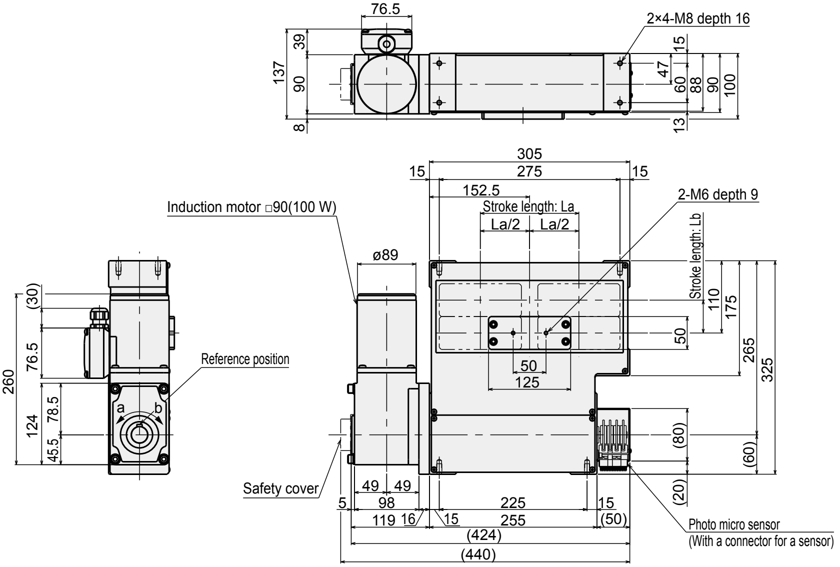

Characteristics

Descriptions		Characteristics
La stroke length	mm	max.150
Lb stroke length	mm	max.50
Internal weight of La stroke section (moa)	kg	1.8
Internal weight of Lb stroke section (mob)	kg	3.8
Product weight	kg	25
Lubrication method		Grease lubrication

Descriptions		Characteristics
Allowable thrust force N of the input shaft		2000
Allowable radial force N for the input shaft		1600
Moment of inertia of the input shaft	$kg \cdot m^2$	2.4×10^{-3}
Internal frictional torque (Tin)	N·m	4.8
Repeatability	mm	±0.02
Paint color		Silver

Rated dynamic payload table

Stroke direction	Stroke length (mm)	Min. index angle (°)	Rated dynamic payload (kg)							
			Input shaft rotational speed (rpm)							
			10	20	30	40	50	60	70	80
La	10	21	8.8	7.0	5.9	5.2	4.5	4.0	3.5	2.6
	20	30	8.0	6.4	5.4	4.7	4.1	3.7	3.2	2.4
	30	36	7.6	6.0	5.1	4.4	3.9	3.4	3.0	2.1
	40	41	7.3	5.8	4.9	4.3	3.7	3.3	2.9	1.8
	50	46	7.2	5.7	4.8	4.2	3.7	3.2	2.7	1.6
	60	50	7.0	5.5	4.7	4.1	3.6	3.1	2.4	1.4
	70	54	6.9	5.5	4.6	4.0	3.5	3.1	2.3	1.3
	80	58	6.8	5.4	4.6	4.0	3.5	3.1	2.1	1.2
	90	60	6.7	5.3	4.5	3.9	3.4	3.0	1.8	0.9
	100	64	6.7	5.3	4.5	3.9	3.4	3.0	1.7	0.9
	110	71	6.7	5.3	4.5	3.9	3.5	3.1	2.1	1.1
	120	77	6.7	5.3	4.5	4.0	3.5	3.1	2.3	1.3
	130	84	6.7	5.3	4.6	4.0	3.5	3.2	2.6	1.6
	140	92	6.7	5.3	4.6	4.0	3.6	3.2	2.9	1.9
	150	99	6.7	5.3	4.6	4.1	3.6	3.3	2.9	2.0
Lb	10	27	8.3	6.6	5.7	5.1	4.6	4.1	3.7	3.4
	20	37	7.5	6.0	5.2	4.6	4.1	3.7	3.3	3.0
	30	45	7.2	5.7	4.9	4.4	3.9	3.5	3.2	2.8
	40	52	7.0	5.6	4.8	4.2	3.8	3.4	3.1	2.2
	50	58	6.8	5.4	4.7	4.1	3.7	3.3	3.0	1.6

Dimensions

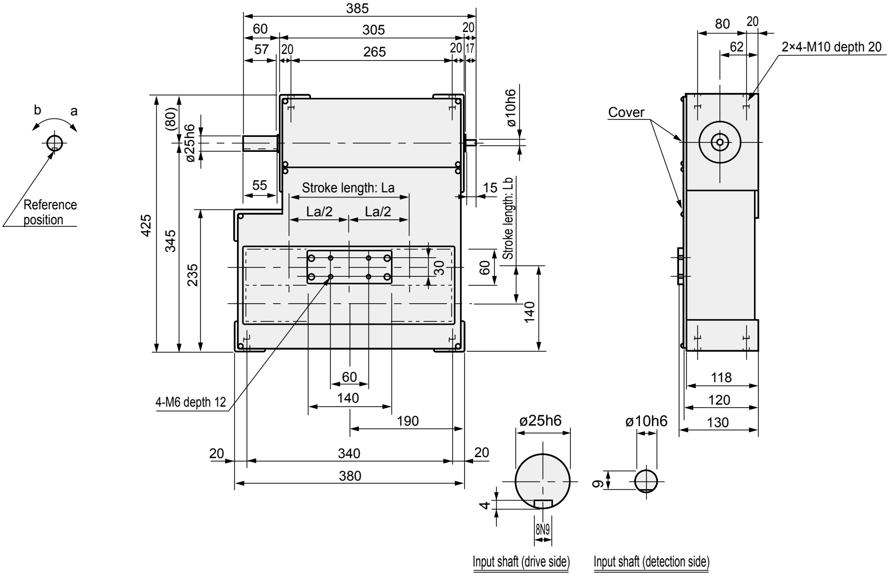

Dimensions with options

Hollow shaft geared motor (200 W) + micro sensor

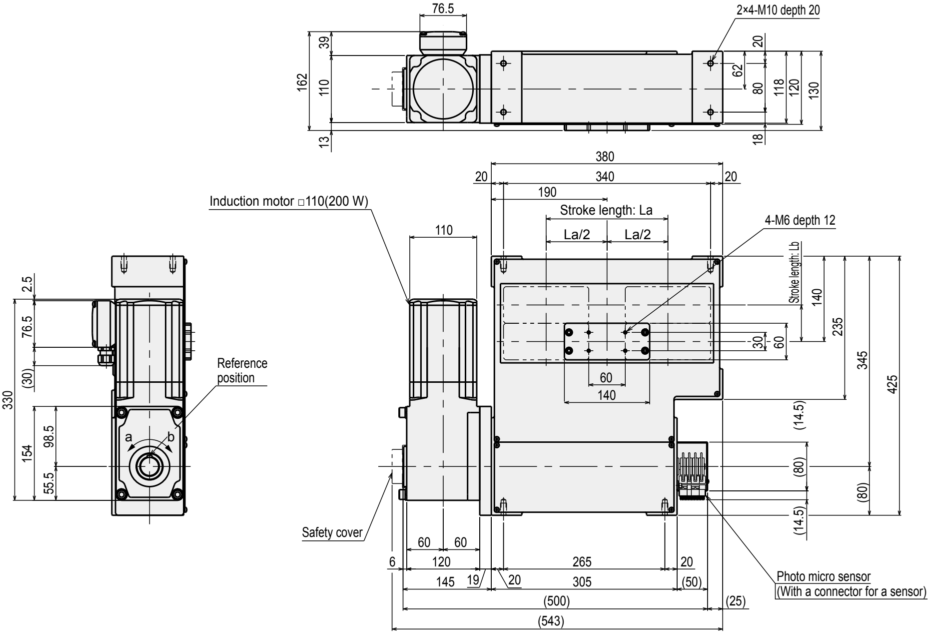

Characteristics

Descriptions	Characteristics
La stroke length mm	max.200
Lb stroke length mm	max.60
Internal weight of La stroke section (moa) kg	3.6
Internal weight of Lb stroke section (mob) kg	6.9
Product weight kg	50
Lubrication method	Grease lubrication

Descriptions	Characteristics
Allowable thrust force N of the input shaft	2500
Allowable radial force N for the input shaft	2700
Moment of inertia of the input shaft kg·m^2	8.6 × 10^{-3}
Internal frictional torque (Tin) N·m	7.8
Repeatability mm	±0.02
Paint color	Silver

Rated dynamic payload table

Stroke direction	Stroke length (mm)	Min. index angle (°)	Rated dynamic payload (kg)							
			Input shaft rotational speed (rpm)							
			10	20	30	40	50	60	70	80
La	10	20	14.0	11.1	9.4	8.2	7.1	6.2	5.5	4.7
	20	28	12.7	10.1	8.5	7.4	6.4	5.6	4.9	4.2
	30	33	11.9	9.4	7.9	6.8	5.9	5.2	4.5	3.3
	40	38	11.5	9.1	7.7	6.6	5.7	5.0	4.3	3.0
	50	43	11.2	8.9	7.5	6.5	5.6	4.9	4.3	3.0
	60	47	11.0	8.7	7.3	6.3	5.5	4.8	4.2	2.7
	70	50	10.8	8.5	7.2	6.2	5.3	4.6	4.0	2.3
	80	53	10.6	8.4	7.0	6.1	5.2	4.5	3.9	2.0
	90	57	10.5	8.3	7.0	6.0	5.2	4.5	3.9	2.0
	100	60	10.4	8.2	6.9	6.0	5.2	4.5	3.6	1.9
	110	62	10.3	8.1	6.8	5.9	5.1	4.4	3.2	1.5
	120	65	10.2	8.0	6.8	5.8	5.0	4.4	3.1	1.4
	130	68	10.1	8.0	6.7	5.8	5.0	4.4	3.0	1.4
	140	70	10.0	7.9	6.7	5.7	5.0	4.3	2.7	1.1
	150	73	10.0	7.9	6.6	5.7	4.9	4.3	2.6	1.1
	160	78	10.0	7.9	6.7	5.8	5.0	4.4	3.0	1.4
	170	83	10.0	7.9	6.7	5.8	5.1	4.4	3.3	1.6
	180	88	10.0	7.9	6.7	5.8	5.1	4.5	3.6	1.9
	190	94	10.0	7.9	6.8	5.9	5.2	4.6	4.1	2.3
	200	99	10.0	7.9	6.8	5.9	5.2	4.6	4.1	2.5
Lb	10	27	13.1	10.4	9.0	8.0	7.2	6.5	5.9	5.3
	20	36	11.7	9.4	8.1	7.1	6.4	5.7	5.1	4.6
	30	44	11.2	8.9	7.7	6.8	6.1	5.4	4.9	4.4
	40	51	10.8	8.6	7.4	6.6	5.9	5.3	4.7	4.3
	50	57	10.5	8.4	7.2	6.4	5.7	5.1	4.6	4.2
	60	63	10.3	8.2	7.1	6.3	5.6	5.0	4.5	4.1

● MEMO

● MEMO

Option

● Worm reducer (**CRG25/32 HO32 to 135 TE35 to 150**)

■ Features

1. Taking full advantage of the index drive performance
   These are specially designed worm reducers for the index drive. By directly mounting them onto the input shaft, optimum rotation and braking can be achieved, and you can take full advantage of the performance of the index drive series.
2. Space saving
   By mounting them directly onto the input shaft, you will get a compact drive system.
   In addition, you can reduce the steps for designing and assembling the drive system.
3. Clutch/Brake
   The 2 types of reducers are available: the 1 with clutch/brake and the other without.
   (except for CRG reducers)
4. Series expanding to 3 models in 16 sizes
   The wide range of sizes are standard in the series.

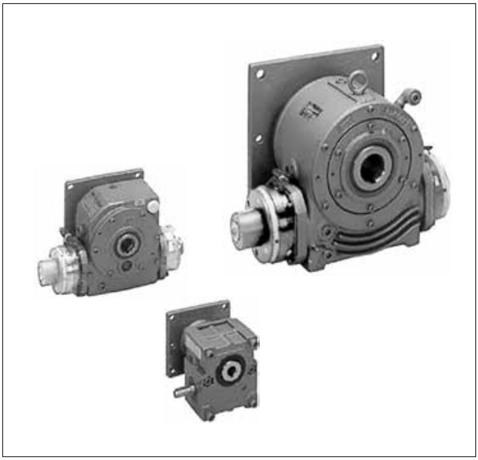

When designing or selecting

⚠ CAUTION

1. The reducer load torque should be smaller than the dynamic rated output torque.
2. When the index drive is operated intermittently using clutch/brake, check the motion time of the clutch/brake.
   The motion time of the clutch/brake varies depending on the characteristics of the clutch/brake itself and the rotational speed and moment of inertia of the shaft/pulley to be operated.
3. When you install a detection switch, check the response time of the detection switch.
   If the input shaft speed is fast, the detection switch may not be able to detect it.
4. When you use a reducer for the purpose other than using with index drive, confirm the characteristics values.
   Please note that the nominal reduction ratio may vary from the actual reduction ratio for CRG reducers.
5. When you design the mounting and installation, take into consideration that inspection, disassembly and assembly should be easily conducted. And the oil level gauge should be accessible.
6. Piping for replacing the lubricating oil (not required for CRG reducer)
   When you install a reducer in an automated machine, replacing oil may become impossible. In this case, we recommend you provide piping for draining and refilling oil before installation to the automated machine so that you can replace it easily.
7. Reducers are filled with lubricating oil. Oil may seep out of the oil seal while being used. Conduct periodic inspection and provide countermeasures such as an oil drip pan if this may cause a product defect.

Installation & adjustment

⚠ CAUTION

1. When you install a pulley, sprocket, or table to the worm shaft, do not apply impact with a hammer. When you apply impact, the reducer may become damaged.
   For a reducer with a clutch, if you tighten a mounting bolt deeper than the specification, internal components may become damaged. (Refer to the dimensions.)
2. When you install a pulley or sprocket to the worm shaft to drive the system, pay attention to the allowable OHL, and apply appropriate tension. Excessive tension may cause noise, shorten service life, damage the worm shaft and result in malfunction of the clutch/brake.
3. When you connect shafts, align the centers of the shafts.
   If the centers are not aligned, noise may leak, the bearing service life may be shortened and the unit may break.
4. Install the unit in the position specified in the specifications.
5. Clutch/Brake is a dry. If water or oil is present on the friction surfaces, the transmission torque may be reduced. Avoid getting water or oil on the friction surfaces.
   When you use this unit in an environment where dust such as iron or sand powders are present, the dust may shorten the service life significantly if you get it on the friction surfaces. Be particular careful to avoid dust.
6. Rotate the input shaft at speeds specified in the specifications.
7. Be sure to attach the grease nipple to the HO reduction gear of the 5, 6 reducer before operation.

Option

● Worm reducer (**CRG25/32 HO32 to 135 TE35 to 150**)

8 The reducers are sealed with lubricating oil. There is no need for initial lubrication. The product is sealed with a plug when shipped. Before operation, replace the plug with the one with breather holes included in the shipment. (TE reducers have a pressure vent. For TE35 and TE42, there is no need for replacement.)
If not replaced, oil leak may occur leading to a fire.

9 Do not use this product in an environment where ignition, explosion, or fire may occur.

10 Do not touch any moving parts while the reducer is running. This would lead to injury.

11 Clutch/Brake wiring
The ground terminals of the motor and the controller should be grounded. We recommend the Class III ground (100 Ω or less and ø1.6 mm or greater) as the grounding method. Choose the correct wire size for the power supply capacity. If a wire smaller in capacity is used, the insulation coating may melt resulting in electric shock or leakage leading to a fire.

(1) Connection
Power required for operating clutch/brake is 24 VDC. Control the voltage fluctuation within ±10%. If voltage varies, the performance will deteriorate resulting in coil overheating and/or damage.
If the circuit is long, the voltage supplied to the clutch/brake may drop due to resistance of the circuit even if the power supply generates proper voltage. Check the voltage at the terminals of the clutch/brake. A switch on the DC side should turn on or off the clutch/brake. If this is done on the AC side, motion is delayed. In this case, allow time lag for switching.
Do not pull or bend the lead wires.

(2) Surge absorbing protective element (varistor)
The surge absorbing protective element (varistor) which comes with the product should be connected in parallel to the clutch (or brake). This element does not have polarity.

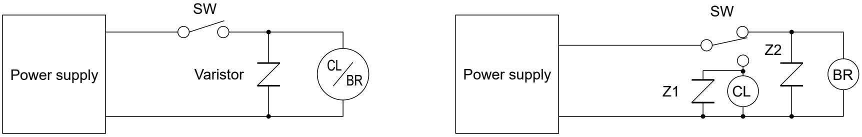

Clutch/Brake connection circuit

12 Example circuit
Design the circuit based on universal electrical designing.

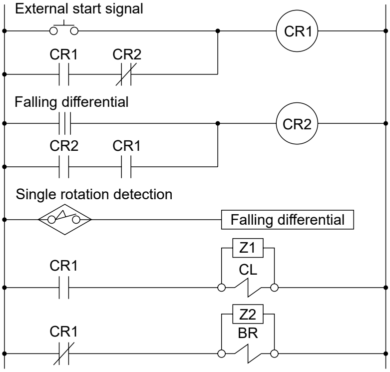

● Timing chart example
Single rotation detection: For a limit switch (LS)

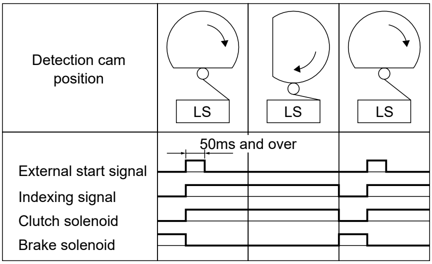

During use & maintenance

⚠ CAUTION

1. Inspect for any loosened bolts or screws.
2. Do not service or inspect the units while power is being supplied.
   It may sudden run due to an error or control circuit failure resulting in injury.
3. If any abnormal noise is heard, immediately stop the machine.
   Internal parts may be damaged. Contact your dealer of CKD.
4. Replacing lubricating oil
   Replace lubricating oil in the following manner.
   Be sure to perform the initial replacement in order to remove initial wear particles after running-in.
   The temperature of lubricating oil is very high immediately after the operation is stopped. Replace oil 1 to 2 hours after stopping the operation. Check the oil level every week. Be sure to refill oil with the identical manufacturer, brand and grade as necessary. If you recognize significant deterioration of oil performance (viscosity, color, etc.), shorten the replacement intervals.
   (1) HO reducer
   The first replacement should be done 50 hours after starting the operation. Afterward, replace it every 6 months. Supply with grease from the lubricating oil at the time of replacing the grease nipple.
   Model No.: Albania Grease S2 (Showa Shell)
   (2) TE reducer
   The first replacement should be done at 2,000 hours after starting the operation. Afterward, replace it every 2,000-8,000 hours.
5. Adjusting the gap
   When clutch/brake gap becomes as listed in the chart below, adjust the gap properly. When you adjust the gap, the brake time of the clutch/brake will change. Confirm that start and stop occur in a dwell section of index drive input shaft. Adjust the timing of clutch/brake with the input shaft detection cam.

HO reducer (unit: mm)

HO size		32	40	50	60	80	100	135
Clutch	Limit gap	0.4	0.5	0.5	0.5	0.5	0.75	0.75
	Initial gap setting	0.15	0.2	0.2	0.2	0.2	0.3	0.3
Brake	Limit gap	0.4	0.5	0.5	0.5	0.5	0.75	0.75
	Initial gap setting	0.15	0.2	0.2	0.2	0.2	0.3	0.3

TE reducer (common to Clutch/Brake) (unit: mm)

TE size	35	42	51	63	80	100	150
Guidelines for re-adjusting the gap	0.4	0.4	0.4	0.5	0.6	0.6	0.8
Specified gap	0.15 to 0.25	0.15 to 0.25	0.15 to 0.25	0.15 to 0.25	0.20 to 0.35	0.20 to 0.35	0.20 to 0.35

Option

● Worm reducer

■ Standard worm reducers

The chart below indicates the combinations of standard installations.
Check the reducer load torque (Ter) and the worm reducer rated output torque before use.

Roller gear cam drive

For Compact

Main model No.		CRG reducer Size	Reduction ratio
RGIS RGOS	**025**	**CRG25**	1/10, 1/20, 1/30 1/40, 1/50, 1/60
	032	**CRG32**	1/10, 1/20, 1/30 1/40, 1/50, 1/60

The reduction ratio is 1/19.5 for 1/20 and 1/39 for 1/40.

For Standard

Main model No.		HO reducer Size	Reduction ratio Value in ( ) represents the special reduction ratio.	TE reducer Size	Reduction ratio
RGIS RGOS RGCS	**040**	**HO32**	1/20, 1/40, 1/60 (1/30, 1/50)	**-**	-
	050	**HO32**	1/20, 1/40, 1/60 (1/30, 1/50)	**TE35**	1/10, 1/20, 1/30 1/40, 1/50, 1/60
	063	**HO40**	1/20, 1/40, 1/60 (1/30, 1/50)	**TE42**	1/10, 1/20, 1/30 1/40, 1/50, 1/60
	080	**HO50**	1/20, 1/30, 1/40 1/50, 1/60	**TE51**	1/10, 1/20, 1/30 1/40, 1/50, 1/60
	110	**HO60**	1/20, 1/30, 1/40 1/50, 1/60	**TE63**	1/10, 1/20, 1/30 1/40, 1/50, 1/60
	140	**HO80**	1/20, 1/30, 1/40 1/50, 1/60	**TE80**	1/10, 1/20, 1/30 1/40, 1/50, 1/60
	180	**HO100**	1/20, 1/30, 1/40 1/50, 1/60	**TE100**	1/10, 1/20, 1/30 1/40, 1/50, 1/60
	250	**HO135**	1/20, 1/40, 1/60 (1/30, 1/50)	**TE150**	1/10, 1/20, 1/30 1/40, 1/50, 1/60

For Table type

Main model No.		HO reducer Size	Reduction ratio Value in ( ) represents the special reduction ratio.	TE reducer Size	Reduction ratio
RGIT RGCT	**063**	**HO32**	1/20, 1/40, 1/60 (1/30, 1/50)	**TE35**	1/10, 1/20, 1/30 1/40, 1/50, 1/60
	080	**HO40**	1/20, 1/40, 1/60 (1/30, 1/50)	**TE42**	1/10, 1/20, 1/30 1/40, 1/50, 1/60
	110	**HO50**	1/20, 1/30, 1/40 1/50, 1/60	**TE51**	1/10, 1/20, 1/30 1/40, 1/50, 1/60
	140	**HO60**	1/20, 1/30, 1/40 1/50, 1/60	**TE63**	1/10, 1/20, 1/30 1/40, 1/50, 1/60
	180	**HO80**	1/20, 1/30, 1/40 1/50, 1/60	**TE80**	1/10, 1/20, 1/30 1/40, 1/50, 1/60
	250	**HO100**	1/20, 1/30, 1/40 1/50, 1/60	**TE100**	1/10, 1/20, 1/30 1/40, 1/50, 1/60

For Wide angle

Main model No.		HO reducer Size	Reduction ratio Value in ( ) represents the special reduction ratio.	TE reducer Size	Reduction ratio
RGIL **RGOL**	**063**	**HO32**	1/20, 1/40, 1/60 (1/30, 1/50)	**TE35**	1/10, 1/20, 1/30 1/40, 1/50, 1/60
	080	**HO40**	1/20, 1/40, 1/60 (1/30, 1/50)	**TE42**	1/10, 1/20, 1/30 1/40, 1/50, 1/60
	110	**HO50**	1/20, 1/30, 1/40 1/50, 1/60	**TE51**	1/10, 1/20, 1/30 1/40, 1/50, 1/60
	140	**HO60**	1/20, 1/30, 1/40 1/50, 1/60	**TE63**	1/10, 1/20, 1/30 1/40, 1/50, 1/60
	180	**HO80**	1/20, 1/30, 1/40 1/50, 1/60	**TE80**	1/10, 1/20, 1/30 1/40, 1/50, 1/60
	250	**HO100**	1/20, 1/30, 1/40 1/50, 1/60	**TE100**	1/10, 1/20, 1/30 1/40, 1/50, 1/60

Parallel cam drive

Main model No.		HO reducer Size	Reduction ratio Value in ( ) represents the special reduction ratio.	TE reducer Size	Reduction ratio
PCIS **PCOS**	**040**	-	-	-	-
	050	**HO32**	1/20, 1/40, 1/60 (1/30, 1/50)	**TE35**	1/10, 1/20, 1/30 1/40, 1/50, 1/60
	063	**HO40**	1/20, 1/40, 1/60 (1/30, 1/50)	**TE42**	1/10, 1/20, 1/30 1/40, 1/50, 1/60
	080	**HO50**	1/20, 1/30, 1/40 1/50, 1/60	**TE51**	1/10, 1/20, 1/30 1/40, 1/50, 1/60
	100	**HO60**	1/20, 1/30, 1/40 1/50, 1/60	**TE63**	1/10, 1/20, 1/30 1/40, 1/50, 1/60
	125	**HO80**	1/20, 1/30, 1/40 1/50, 1/60	**TE80**	1/10, 1/20, 1/30 1/40, 1/50, 1/60
	160	**HO100**	1/20, 1/30, 1/40 1/50, 1/60	**TE100**	1/10, 1/20, 1/30 1/40, 1/50, 1/60
	200	**HO100**	1/20, 1/30, 1/40 1/50, 1/60	**TE100**	1/10, 1/20, 1/30 1/40, 1/50, 1/60
		HO135	1/20, 1/40, 1/60 (1/30, 1/50)	**TE150**	1/10, 1/20, 1/30 1/40, 1/50, 1/60
	250	**HO135**	1/20, 1/40, 1/60 (1/30, 1/50)	**TE150**	1/10, 1/20, 1/30 1/40, 1/50, 1/60

Option

● Worm reducer

■ How to display the unit model number

Worm reducer CRG Series

CRG25 - 1/20
Ⓐ Ⓑ

Ⓐ Model No.
CRG25
CRG32

Ⓑ Reduction ratio
1/10
1/20
1/30
1/40
1/50
1/60

Note. The actual reduction ratio of CRG25 and CRG32 is 1/19.5 for 1/20 and 1/39 for 1/40.

Worm reducer HO Series

HO50 - 1/40 - Y - A - 5
Ⓐ Ⓑ Ⓒ Ⓓ Ⓔ

Ⓐ Model No.
HO32
HO40
HO50
HO60
HO80
HO100
HO135

Ⓑ Reduction ratio
1/20
1/30
1/40
1/50
1/60

Ⓒ Clutch/Brake	
Y	Clutch/Brake: Yes
N	Clutch/Brake: No

Note. Those of 1/30 and 1/50 for HO32, HO40 and HO135 have special ratio. Verify the delivery schedule.

Ⓓ Worm shaft layout		
	Clutch/Brake: Yes	Clutch/Brake: No
A	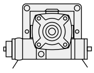 Electromagnetic clutch Electromagnetic brake	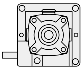
B	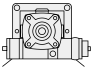 Electromagnetic brake Electromagnetic clutch	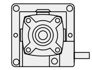

* A: Input shaft comes to the left when you face it.
B: Input shaft comes to the right when you face it.

High torque worm reducer TE Series

TE80 - 1/40 - Y - A - 5
Ⓐ Ⓑ Ⓒ Ⓓ Ⓔ

Ⓐ Model No.
TE35
TE42
TE51
TE63
TE80
TE100
TE150

Ⓑ Reduction ratio
1/10
1/20
1/30
1/40
1/50
1/60

Ⓒ Clutch/Brake	
Y	Clutch/Brake: Yes
N	Clutch/Brake: No

Ⓓ Worm shaft layout		
	Clutch/Brake: Yes	Clutch/Brake: No
A	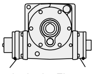 Electromagnetic clutch Electromagnetic brake	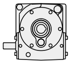
B	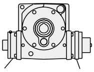 Electromagnetic brake Electromagnetic clutch	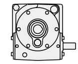
G		Both shaft (Special specification) 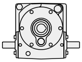

* A: Input shaft comes to the left when you face it.
B: Input shaft comes to the right when you face it.

* Reducers for PC*S040 to 125, RG*S040 and PPLX are custom order items. Contact CKD for details.

Direction of gravity ↓

Ⓔ: Position of the reducer

	"Worm shaft layout" - A	"Worm shaft layout" - B		"Worm shaft layout" - A	"Worm shaft layout" - B
1	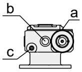	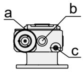	4	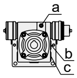	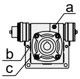
2	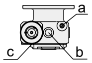	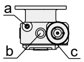	5	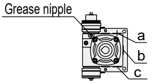	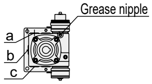
3	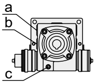	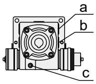	6	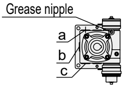	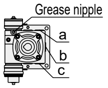

a: Oil supply port b: Oil level gauge c: Drain port
* Grease nipple is attached at shipment.

Ⓔ Position of the reducer	
0	The reducer position is "0" for TE35 and TE42.

Direction of gravity ↓

Ⓔ Position of the reducer

	"Worm shaft layout" - A	"Worm shaft layout" - B		"Worm shaft layout" - A	"Worm shaft layout" - B
1	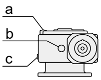	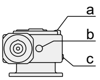	4	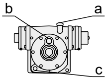	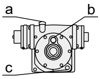
2	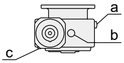	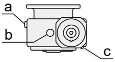	5	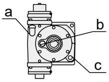	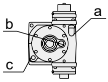
3	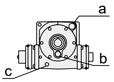	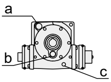	6	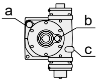	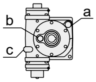

a: Oil supply port (pressure vent) b: Oil level gauge c: Drain port
* Locations of these may vary depending on the reducer position for TE51 or higher.

Option

● Worm reducer (**CRG25/CRG32**)

■ Characteristics table

Standard installation index		
	CRG25	RG*S025
	CRG32	RG*S032
Nominal reduction ratio		1/10, 1/20, 1/30, 1/40, 1/50, 1/60
Actual reduction ratio		1/10, 1/19.5, 1/30, 1/39, 1/50, 1/60
Max. speed of input shaft		1800 rpm
Allowable OHL of the input shaft		29.4 N
Allowable thrust force of the input shaft		4.91 N
Internal frictional torque (Tinr)		1.96×10^{-2} N·m
Radial force of the output shaft		196 N
Thrust force of the output shaft		49 N
Allowable runout (radial direction) of input and output shafts		At the tip of the shaft, 0.05 mm T.I.R. or less
Backlash (output shaft)		Absolute value of 0.15 mm or less at the radius of 15 mm
Weight		0.4 kg
Lubrication		Filled with grease No.2 (lithium grease)
Temperature rise		Room temperature + 15 degrees C or less
Worm torsion direction		Right helix

Dimensions

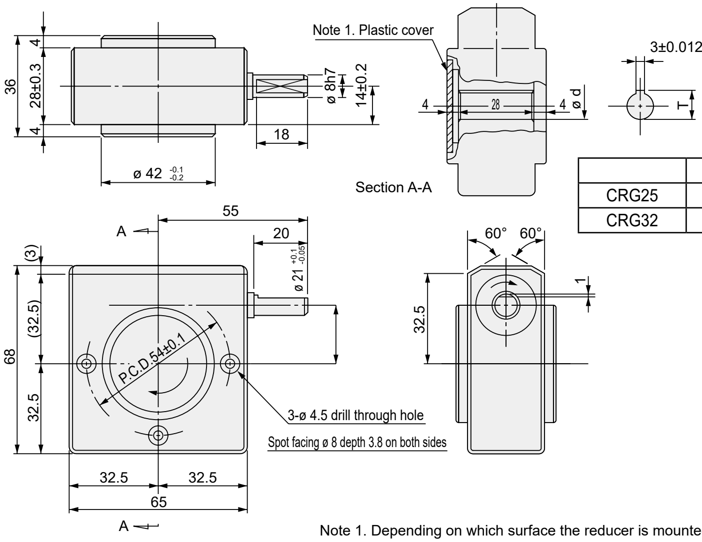

	d	T
CRG25	8G7	9.4 $^{+0.1}_{0}$
CRG32	10G7	11.4 $^{+0.1}_{0}$

Note 1. Depending on which surface the reducer is mounted, replace the plastic cover.
Note 2. Allowable tolerance should be JIS B0404 Class 1-16 unless otherwise specified.

Rated output torque (N·m)

Reduction ratio / Input rpm	1/10	1/20	1/30	1/40	1/50	1/60
1800	1.8	1.9	1.8	1.9	1.9	1.8
1500	1.9	2.0	2.0	2.1	2.0	2.0
1200	2.1	2.2	2.1	2.3	2.2	2.2
900	2.4	2.5	2.4	2.6	2.5	2.5
600	2.8	2.9	2.8	2.9	2.8	2.8
300	3.7	4.0	3.8	4.0	3.8	3.9

Efficiency (%)

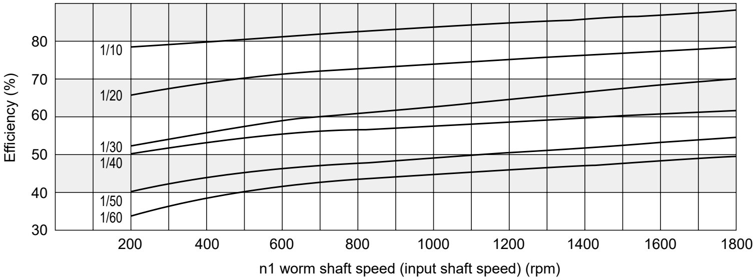

Option

● Worm reducer (**HO32**)

■ Characteristics table

Standard installation index		RG*S040/050, RG*T063, RG*L063, PC*S050				
Reduction ratio Value in ( ) represents the special reduction ratio		1/20, 1/40, 1/60, (1/30,1/50)				
Internal moment of inertia (converted for input shaft)		1/20	(1/30)	1/40	(1/50)	1/60
		4.28×10^{-6} kg·m²	3.60×10^{-6} kg·m²	3.95×10^{-6} kg·m²	2.88×10^{-6} kg·m²	3.88×10^{-6} kg·m²
Max. speed of input shaft		1800 rpm				
Allowable OHL of the input shaft	With C/B	78.5 N				
	Without C/B	147 N				
Internal frictional torque (Tinr) ISO viscosity grade VG320	5°C (5500 mm²/s)	0.3 N·m				
	10°C (3200 mm²/s)	0.24 N·m				
	15°C (2000 mm²/s)	0.19 N·m				
	20°C (1400 mm²/s)	0.16 N·m				
	30°C (650 mm²/s)	0.12 N·m				
	40°C (320 mm²/s)	0.084 N·m				
Weight	With C/B	5.0 kg				
	Without C/B	4.0 kg				
Lubricating oil (when shipped)		Bonnoc TS320 (ENEOS)				
Oil level		0.05 to 0.10 ℓ				
Worm torsion direction		Right helix				

■ Clutch/brake characteristics table

		Clutch (102-04-13-K-35G)	Brake (112-04-12-K-35G)
Dynamic frictional torque		1.2 N·m	1.2 N·m
Rotor moment of inertia		1.41×10^{-5} kg·m²	-
Armature moment of inertia		4.38×10^{-6} kg·m²	6.15×10^{-6} kg·m²
Exciting voltage		24 VDC	24 VDC
Coil (20°C)	Current	0.33 A	0.33 A
	Capacity	8 W	8 W
	Resistance	72 Ω	72 Ω

■ HO32Rated output torque (N·m)

Reduction ratio / Input rpm		1/20	1/30	1/40	1/50	1/60
1800	With C/B	17	22	22	23	19
	Without C/B	20	26	22	23	19
1700	With C/B	17	22	22	23	19
	Without C/B	21	27	22	23	19
1600	With C/B	17	22	23	23	19
	Without C/B	21	27	23	23	19
1500	With C/B	16	22	23	24	20
	Without C/B	22	28	23	24	20
1400	With C/B	16	22	24	24	20
	Without C/B	22	28	24	24	20
1300	With C/B	16	22	25	25	21
	Without C/B	23	29	25	25	21
1200	With C/B	16	22	25	26	21
	Without C/B	23	30	25	26	21
1100	With C/B	16	22	25	26	21
	Without C/B	24	31	26	26	21
1000	With C/B	16	21	25	27	21
	Without C/B	25	32	26	27	21

■ HO32Efficiency (%)

Reduction ratio / Input rpm	1/20	(1/30)	1/40	(1/50)	1/60
1800	69	62	57	54	48
1700	69	61	56	54	47
1600	69	61	56	53	47
1500	68	61	55	53	47
1400	68	60	55	53	46
1300	68	60	55	52	46
1200	67	60	54	51	45
1100	67	59	53	50	44
1000	66	58	52	50	43

Dimensions

● With C/B

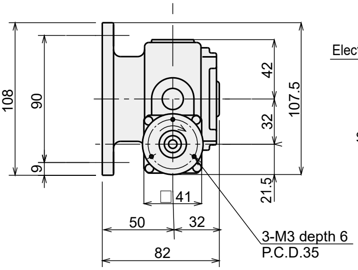

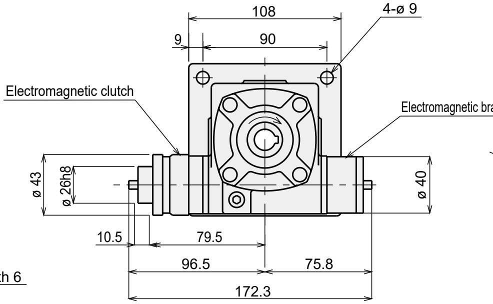

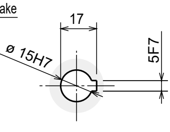

Hollow output shaft

● Without C/B

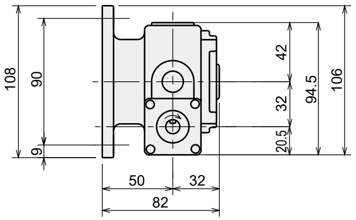

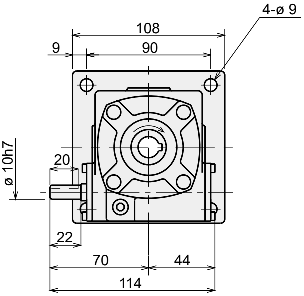

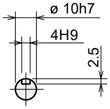

Reducer input shaft

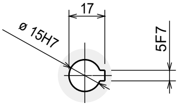

Hollow output shaft

Positions of the oil level gauge and the oil fill/drain port determined by the installation position of HO reducer

Position	1	2	3	4	5	6
Dimensions	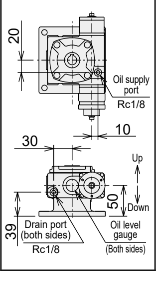	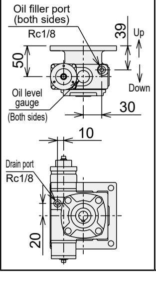	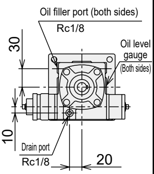	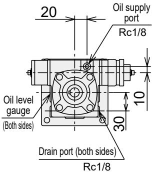	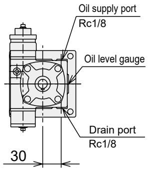	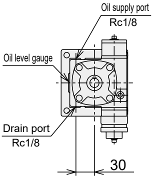

Option

● Worm reducer (**HO40**)

■ Characteristics table

Standard installation index		RG*S063, RG*T080, RG*L080, PC*S063				
Reduction ratio	Value in ( ) represents the special reduction ratio	1/20, 1/40, 1/60, (1/30, 1/50)				
Internal moment of inertia (converted for input shaft)		1/20	(1/30)	1/40	(1/50)	1/60
		1.44×10^{-5} kg·m^2	1.33×10^{-5} kg·m^2	1.32×10^{-5} kg·m^2	1.15×10^{-5} kg·m^2	1.23×10^{-5} kg·m^2
Max. speed of input shaft		1800 rpm				
Allowable OHL of the input shaft	With C/B	104 N				
	Without C/B	196 N				
Internal frictional torque (Tinr) ISO viscosity grade VG320	5°C (5500 mm^2/s)	0.53 N·m				
	10°C (3200 mm^2/s)	0.42 N·m				
	15°C (2000 mm^2/s)	0.34 N·m				
	20°C (1400 mm^2/s)	0.29 N·m				
	30°C (650 mm^2/s)	0.20 N·m				
	40°C (320 mm^2/s)	0.15 N·m				
Weight	With C/B	6.0 kg				
	Without C/B	5.0 kg				
Lubricating oil (when shipped)		Bonnoc TS320 (ENEOS)				
Oil level		0.10 to 0.15 ℓ				
Worm torsion direction		Right helix				

■ Clutch/brake characteristics table

		Clutch (102-05-13-K-35G)	Brake (112-05-12-K-35G)
Dynamic frictional torque		2.4 N·m	2.4 N·m
Rotor moment of inertia		3.15×10^{-5} kg·m^2	-
Armature moment of inertia		9.08×10^{-6} kg·m^2	1.38×10^{-5} kg·m^2
Exciting voltage		24 VDC	24 VDC
Coil (20°C)	Current	0.42 A	0.42 A
	Capacity	10 W	10 W
	Resistance	58 Ω	58 Ω

■ HO40 Rated output torque (N·m)

Reduction ratio / Input rpm		1/20	1/30	1/40	1/50	1/60
1800	With C/B	34	46	42	41	33
	Without C/B	35	47	42	41	33
1700	With C/B	34	45	42	42	33
	Without C/B	36	48	42	42	33
1600	With C/B	34	45	43	43	34
	Without C/B	37	49	43	43	34
1500	With C/B	34	45	44	43	35
	Without C/B	38	51	44	43	35
1400	With C/B	33	45	46	45	35
	Without C/B	39	52	46	45	35
1300	With C/B	33	44	47	46	36
	Without C/B	40	53	47	46	36
1200	With C/B	33	44	48	47	37
	Without C/B	41	54	48	47	37
1100	With C/B	33	43	49	48	38
	Without C/B	43	56	49	48	38
1000	With C/B	33	43	51	50	39
	Without C/B	44	57	51	50	39

■ HO40Efficiency (%)

Reduction ratio / Input rpm	1/20	(1/30)	1/40	(1/50)	1/60
1800	71	64	61	56	50
1700	70	63	60	55	49
1600	70	63	60	55	49
1500	70	62	59	54	48
1400	69	62	59	54	48
1300	69	61	58	54	47
1200	68	61	58	53	47
1100	68	60	57	53	46
1000	68	60	56	52	46

Dimensions

● With C/B

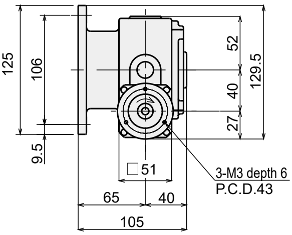

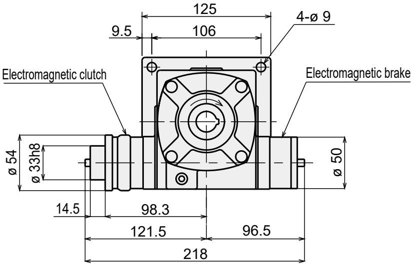

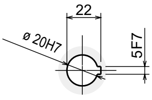

Hollow output shaft

● Without C/B

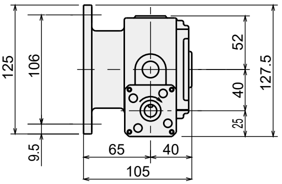

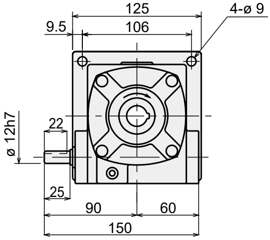

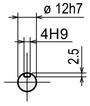

Reducer input shaft

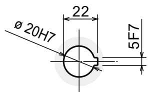

Hollow output shaft

Positions of the oil level gauge and the oil fill/drain port determined by the installation position of HO reducer

Position	1	2	3	4	5	6
Dimensions	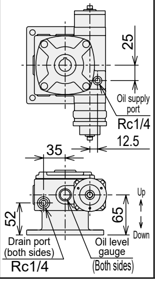 25 Oil supply port Rc1/4 12.5 35 52 65 Up Down Drain port (both sides) Rc1/4 Oil level gauge (Both sides)	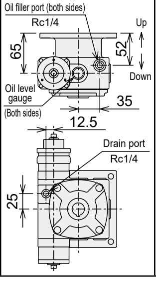 Oil filler port (both sides) Rc1/4 Up 65 52 Down Oil level gauge (Both sides) 35 12.5 Drain port Rc1/4 25	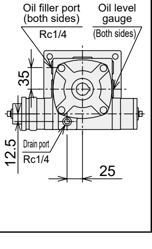 Oil filler port (both sides) Rc1/4 Oil level gauge (Both sides) 35 12.5 Drain port Rc1/4 25	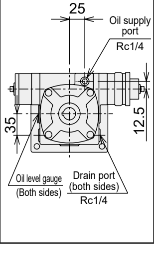 25 Oil supply port Rc1/4 35 12.5 Oil level gauge (Both sides) Drain port (both sides) Rc1/4	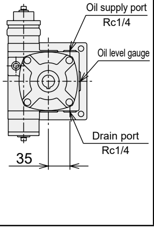 Oil supply port Rc1/4 Oil level gauge Drain port Rc1/4 35	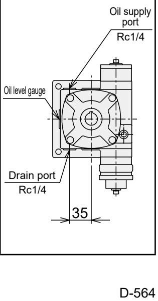 Oil supply port Rc1/4 Oil level gauge Drain port Rc1/4 35

Option

● Worm reducer (**HO50**)

■ Characteristics table

Standard installation index		RG*S080, RG*T110, RG*L110, PC*S080				
Reduction ratio		1/20, 1/30, 1/40, 1/50, 1/60				
Internal moment of inertia (converted for input shaft)		1/20	1/30	1/40	1/50	1/60
		1.79×10^{-5} kg·m^2	3.15×10^{-5} kg·m^2	1.48×10^{-5} kg·m^2	3.17×10^{-5} kg·m^2	1.23×10^{-5} kg·m^2
Max. speed of input shaft		1800 rpm				
Allowable OHL of the input shaft	With C/B	196 N				
	Without C/B	491 N				
Internal frictional torque (Tinr) ISO viscosity grade VG320	5°C (5500 mm^2/s)	0.92 N·m				
	10°C (3200 mm^2/s)	0.72 N·m				
	15°C (2000 mm^2/s)	0.59 N·m				
	20°C (1400 mm^2/s)	0.50 N·m				
	30°C (650 mm^2/s)	0.35 N·m				
	40°C (320 mm^2/s)	0.26 N·m				
Weight	With C/B	9.5 kg				
	Without C/B	8.0 kg				
Lubricating oil (when shipped)		Bonnoc TS320 (ENEOS)				
Oil level		0.2 ℓ				
Worm torsion direction		Right helix				

■ Clutch/brake characteristics table

		Clutch (101-06-15-K-35G)	Brake (111-06-12-K-35G)
Dynamic frictional torque		5.5 N·m	5.5 N·m
Dynamic frictional torque		5.0 N·m	5.0 N·m
Rotor moment of inertia		7.35×10^{-5} kg·m^2	-
Armature moment of inertia		1.05×10^{-4} kg·m^2	6.03×10^{-5} kg·m^2
Exciting voltage		24 VDC	24 VDC
Coil (20°C)	Current	0.46 A	0.46 A
	Capacity	11 W	11 W
	Resistance	52 Ω	52 Ω

■ HO50 Rated output torque (N·m)

Reduction ratio / Input rpm		1/20	1/30	1/40	1/50	1/60
1800	With C/B	64	70	68	56	59
	Without C/B	64	70	68	56	59
1700	With C/B	65	72	69	57	60
	Without C/B	65	72	69	57	60
1600	With C/B	66	73	70	58	61
	Without C/B	66	73	70	58	61
1500	With C/B	68	74	72	59	63
	Without C/B	68	74	72	59	63
1400	With C/B	70	76	74	61	64
	Without C/B	70	76	74	61	64
1300	With C/B	72	77	76	62	66
	Without C/B	72	77	76	62	66
1200	With C/B	72	79	77	64	67
	Without C/B	75	79	77	64	67
1100	With C/B	72	81	79	65	69
	Without C/B	77	81	79	65	69
1000	With C/B	72	84	81	67	71
	Without C/B	78	84	81	67	71

■ HO50Efficiency (%)

Reduction ratio / Input rpm	1/20	1/30	1/40	1/50	1/60
1800	75	67	64	57	58
1700	74	66	64	56	57
1600	74	65	63	55	57
1500	74	65	63	54	56
1400	73	64	62	54	56
1300	73	63	62	53	55
1200	72	63	61	52	55
1100	72	62	61	52	54
1000	72	61	60	51	53

Dimensions

With C/B

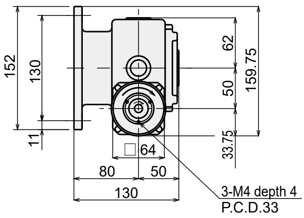

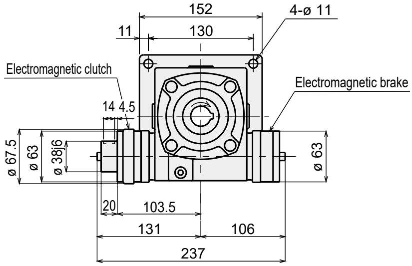

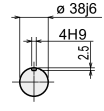

Reducer input shaft

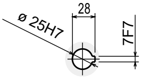

Hollow output shaft

Without C/B

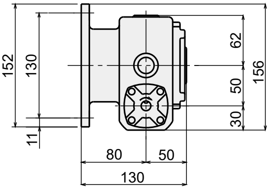

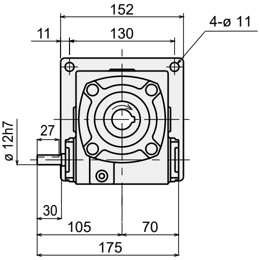

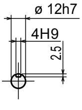

Reducer input shaft

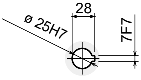

Hollow output shaft

Positions of the oil level gauge and the oil fill/drain port determined by the installation position of HO reducer

Position	1	2	3	4	5	6
Dimensions	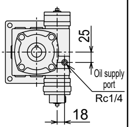 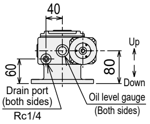 	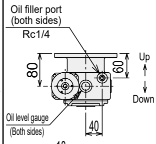 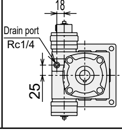 	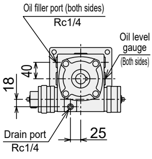 	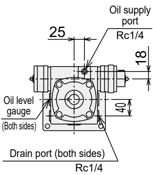 	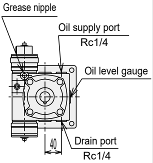 	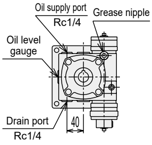

Option

● Worm reducer (**HO60**)

■ Characteristics table

Standard installation index		RG*S110, RG*T140, RG*L140, PC*S100				
Reduction ratio		1/20, 1/30, 1/40, 1/50, 1/60				
Internal moment of inertia (converted for input shaft)		1/20	1/30	1/40	1/50	1/60
		5.64×10^{-5} kg·m²	7.19×10^{-5} kg·m²	5.13×10^{-5} kg·m²	4.85×10^{-5} kg·m²	2.48×10^{-5} kg·m²
Max. speed of input shaft		1800 rpm				
Allowable OHL of the input shaft	With C/B	294 N				
	Without C/B	785 N				
Internal frictional torque (Tinr) ISO viscosity grade VG320	5°C (5500 mm²/s)	1.5 N·m				
	10°C (3200 mm²/s)	1.1 N·m				
	15°C (2000 mm²/s)	0.93 N·m				
	20°C (1400 mm²/s)	0.79 N·m				
	30°C (650 mm²/s)	0.56 N·m				
	40°C (320 mm²/s)	0.41 N·m				
Weight	With C/B	14.5 kg				
	Without C/B	11.0 kg				
Lubricating oil (when shipped)		Bonnoc TS320 (ENEOS)				
Oil level		0.3 ℓ				
Worm torsion direction		Right helix				

■ Clutch/brake characteristics table

		Clutch (101-08-15-K-35G)	Brake (111-08-12-K-35G)
Dynamic frictional torque		11 N·m	11 N·m
Dynamic frictional torque		10 N·m	10 N·m
Rotor moment of inertia		2.24×10^{-4} kg·m²	-
Armature moment of inertia		3.00×10^{-4} kg·m²	1.71×10^{-4} kg·m²
Exciting voltage		24 VDC	24 VDC
Coil (20°C)	Current	0.63 A	0.63 A
	Capacity	15 W	15 W
	Resistance	38 Ω	38 Ω

■ HO60Rated output torque (N·m)

Reduction ratio / Input rpm		1/20	1/30	1/40	1/50	1/60
1800	With C/B	90	112	99	101	95
	Without C/B	90	112	99	101	95
1700	With C/B	92	115	101	103	97
	Without C/B	92	115	101	103	97
1600	With C/B	93	118	103	105	99
	Without C/B	93	118	103	105	99
1500	With C/B	96	120	106	107	101
	Without C/B	96	120	106	107	101
1400	With C/B	99	123	108	109	103
	Without C/B	99	123	108	109	103
1300	With C/B	102	126	111	112	106
	Without C/B	102	126	111	112	106
1200	With C/B	105	128	114	115	108
	Without C/B	105	128	114	115	108
1100	With C/B	108	131	117	119	111
	Without C/B	108	131	117	119	111
1000	With C/B	111	136	121	122	114
	Without C/B	111	136	121	122	114

■ HO60Efficiency (%)

Reduction ratio / Input rpm	1/20	1/30	1/40	1/50	1/60
1800	74	68	63	63	60
1700	74	68	63	62	59
1600	73	67	62	62	59
1500	73	67	61	61	58
1400	72	66	60	61	58
1300	71	65	60	60	57
1200	71	64	59	60	57
1100	70	63	58	59	56
1000	70	63	57	58	56

Dimensions

● With C/B

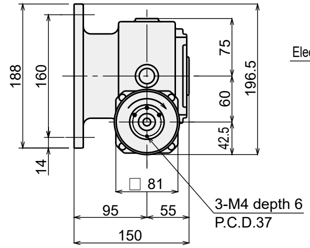

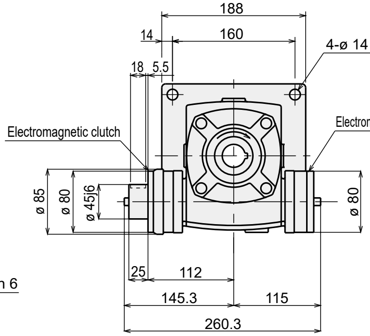

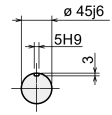

Reducer input shaft

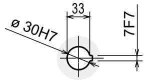

Hollow output shaft

● Without C/B

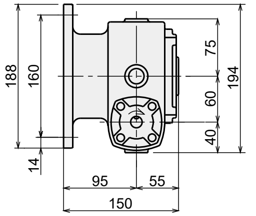

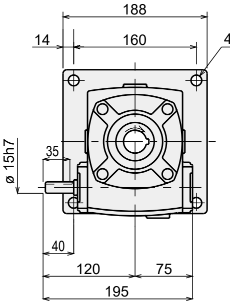

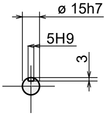

Reducer input shaft

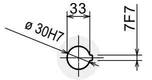

Hollow output shaft

Positions of the oil level gauge and the oil fill/drain port determined by the installation position of HO reducer

Position	1	2	3	4	5	6
Dimensions	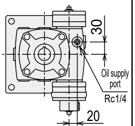 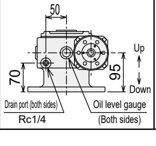	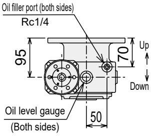 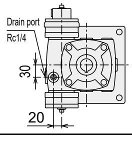	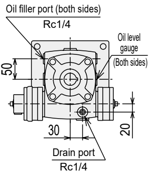	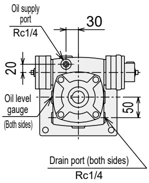	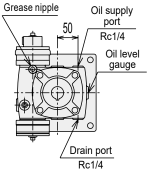	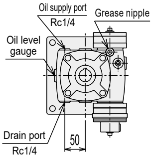

Option

● Worm reducer (**HO80**)

■ Characteristics table

Standard installation index		RG*S140, RG*T180, RG*L180, PC*S125				
Reduction ratio		1/20, 1/30, 1/40, 1/50, 1/60				
Internal moment of inertia (converted for input shaft)		1/20	1/30	1/40	1/50	1/60
		2.65×10^{-4} kg·m²	3.20×10^{-4} kg·m²	2.46×10^{-4} kg·m²	2.44×10^{-4} kg·m²	1.62×10^{-4} kg·m²
Max. speed of input shaft		1800 rpm				
Allowable OHL of the input shaft	With C/B	687 N				
	Without C/B	1570 N				
Internal frictional torque (Tinr) ISO viscosity grade VG320	5°C (5500 mm²/s)	2.9 N·m				
	10°C (3200 mm²/s)	2.2 N·m				
	15°C (2000 mm²/s)	1.8 N·m				
	20°C (1400 mm²/s)	1.4 N·m				
	30°C (650 mm²/s)	1.0 N·m				
	40°C (320 mm²/s)	0.73 N·m				
Weight	With C/B	35.0 kg				
	Without C/B	30.0 kg				
Lubricating oil (when shipped)		Bonnoc TS320 (ENEOS)				
Oil level		0.7 to 1.0 ℓ				
Worm torsion direction		Right helix				

■ Clutch/brake characteristics table

		Clutch (101-10-15-K-35G)	Brake (111-10-12-K-35G)
Dynamic frictional torque		22 N·m	22 N·m
Dynamic frictional torque		20 N·m	20 N·m
Rotor moment of inertia		6.78×10^{-4} kg·m²	-
Armature moment of inertia		9.45×10^{-4} kg·m²	6.63×10^{-4} kg·m²
Exciting voltage		24 VDC	24 VDC
Coil (20°C)	Current	0.83 A	0.83 A
	Capacity	20 W	20 W
	Resistance	29 Ω	29 Ω

■ HO80Rated output torque (N·m)

Reduction ratio Input rpm		1/20	1/30	1/40	1/50	1/60
1800	With C/B	190	237	210	207	195
	Without C/B	190	237	210	207	195
1700	With C/B	195	242	214	211	200
	Without C/B	195	242	214	211	200
1600	With C/B	200	247	219	217	206
	Without C/B	200	247	219	217	206
1500	With C/B	206	253	225	222	211
	Without C/B	206	253	225	222	211
1400	With C/B	211	260	231	229	215
	Without C/B	211	260	231	229	215
1300	With C/B	216	268	237	233	219
	Without C/B	216	268	237	233	219
1200	With C/B	225	275	245	239	223
	Without C/B	225	275	245	239	223
1100	With C/B	232	284	252	244	230
	Without C/B	232	284	252	244	230
1000	With C/B	238	293	259	252	237
	Without C/B	238	293	259	252	237

■ HO80Efficiency (%)

Reduction ratio Input rpm	1/20	1/30	1/40	1/50	1/60
1800	75	70	65	63	61
1700	75	69	64	63	60
1600	75	69	64	62	60
1500	74	69	64	62	60
1400	74	68	63	61	59
1300	74	68	63	61	58
1200	73	67	62	59	57
1100	73	66	61	58	56
1000	72	65	60	57	55

Dimensions

● With C/B

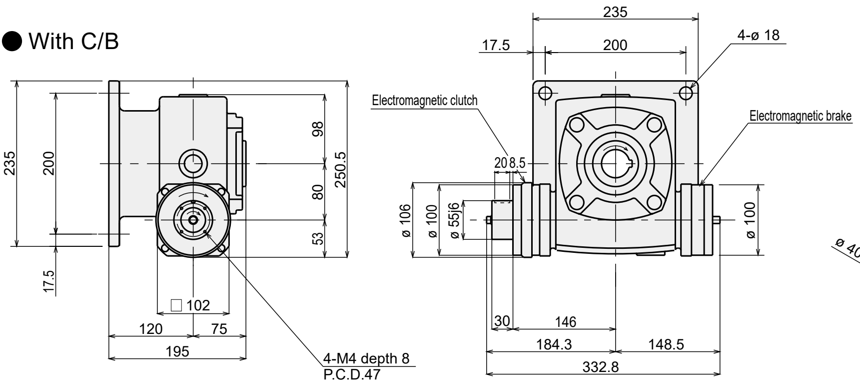

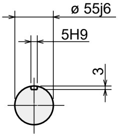

Reducer input shaft

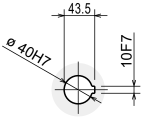

Hollow output shaft

● Without C/B

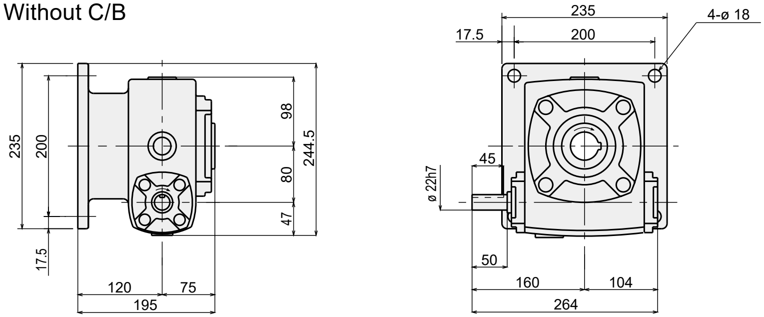

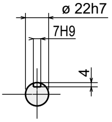

Reducer input shaft

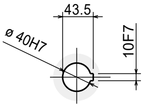

Hollow output shaft

Positions of the oil level gauge and the oil fill/drain port determined by the installation position of HO reducer

Position	1	2	3	4	5	6
Dimensions	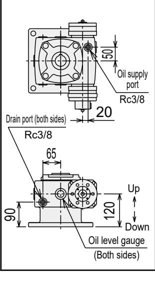	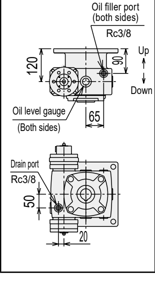	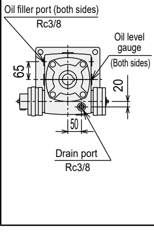	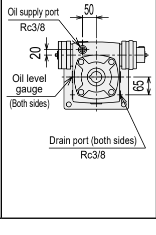	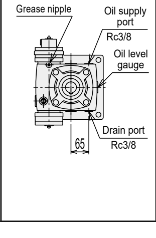	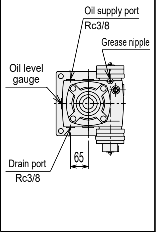

Option

● Worm reducer (**HO100**)

■ Characteristics table

Standard installation index		RG*S180, RG*T250, RG*L250, PC*S160/200				
Reduction ratio		1/20, 1/30, 1/40, 1/50, 1/60				
Internal moment of inertia (converted for input shaft)		1/20	1/30	1/40	1/50	1/60
		5.96×10^{-4} kg·m^2	8.04×10^{-4} kg·m^2	5.32×10^{-4} kg·m^2	4.64×10^{-4} kg·m^2	3.71×10^{-4} kg·m^2
Max. speed of input shaft		1800 rpm				
Allowable OHL of the input shaft	With C/B	883 N				
	Without C/B	1962 N				
Internal frictional torque (Tinr) ISO viscosity grade VG320	5°C (5500 mm^2/s)	4.0 N·m				
	10°C (3200 mm^2/s)	3.1 N·m				
	15°C (2000 mm^2/s)	2.5 N·m				
	20°C (1400 mm^2/s)	2.0 N·m				
	30°C (650 mm^2/s)	1.4 N·m				
	40°C (320 mm^2/s)	1.1 N·m				
Weight	With C/B	60.0 kg				
	Without C/B	50.0 kg				
Lubricating oil (when shipped)		Bonnoc TS320 (ENEOS)				
Oil level		1.5 to 2.0 ℓ				
Worm torsion direction		Right helix				

■ Clutch/brake characteristics table

		Clutch (101-12-15-K-35G)	Brake (111-12-12-K-35G)
Dynamic frictional torque		45 N·m	45 N·m
Dynamic frictional torque		40 N·m	40 N·m
Rotor moment of inertia		2.14×10^{-3} kg·m^2	-
Armature moment of inertia		2.75×10^{-3} kg·m^2	1.81×10^{-3} kg·m^2
Exciting voltage		24 VDC	24 VDC
Coil (20°C)	Current	1.09 A	1.09 A
	Capacity	25 W	25 W
	Resistance	23 Ω	23 Ω

■ HO100Rated output torque (N·m)

Reduction ratio / Input rpm		1/20	1/30	1/40	1/50	1/60
1800	With C/B	392	428	420	381	365
	Without C/B	392	428	420	381	365
1700	With C/B	402	437	427	389	373
	Without C/B	402	437	427	389	373
1600	With C/B	413	447	437	398	382
	Without C/B	413	447	437	398	382
1500	With C/B	424	457	448	408	392
	Without C/B	424	457	448	408	392
1400	With C/B	436	466	461	420	402
	Without C/B	436	466	461	420	402
1300	With C/B	445	478	474	433	411
	Without C/B	445	478	474	433	411
1200	With C/B	463	491	490	442	419
	Without C/B	463	491	490	442	419
1100	With C/B	478	508	503	453	429
	Without C/B	478	508	503	453	429
1000	With C/B	492	529	516	464	443
	Without C/B	492	529	516	464	443

■ HO100Efficiency (%)

Reduction ratio / Input rpm	1/20	1/30	1/40	1/50	1/60
1800	78	71	70	67	65
1700	78	71	69	67	64
1600	78	70	69	66	64
1500	78	70	69	66	64
1400	77	69	68	65	63
1300	77	69	68	65	62
1200	77	69	67	64	61
1100	76	68	66	63	60
1000	75	68	65	62	59

Dimensions

With C/B

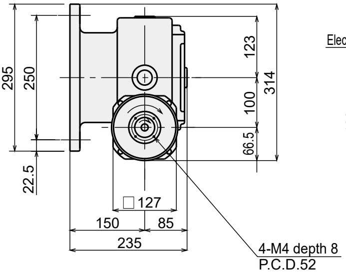

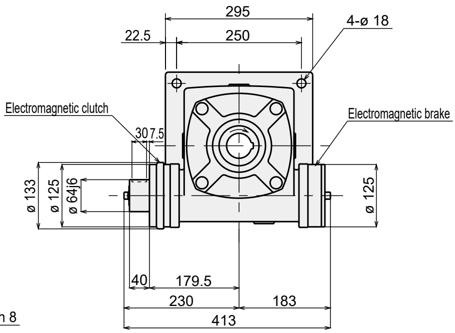

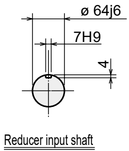

Reducer input shaft

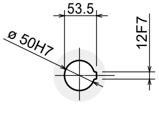

Hollow output shaft

Without C/B

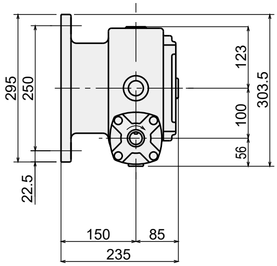

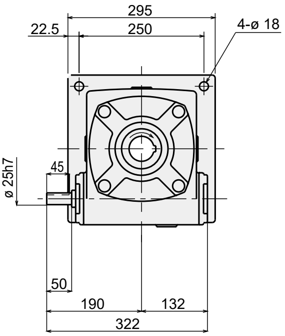

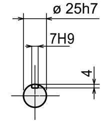

Reducer input shaft

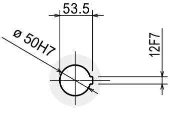

Hollow output shaft

Positions of the oil level gauge and the oil fill/drain port determined by the installation position of HO reducer

Position	1	2	3	4	5	6
Dimensions	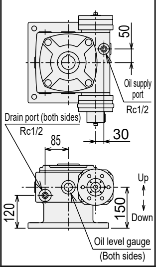	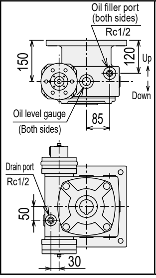	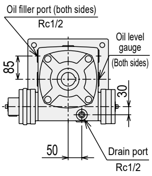	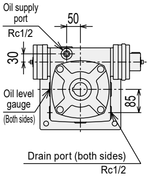	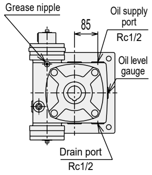	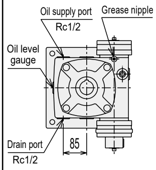

Option

● Worm reducer (**HO135**)

Characteristics table

Standard installation index		RG*S250, PC*S200/250				
Reduction ratio	Value in ( ) represents the special reduction ratio	1/20, 1/40, 1/60, (1/30, 1/50)				
Internal moment of inertia (converted for input shaft)		1/20	(1/30)	1/40	(1/50)	1/60
		1.97×10^{-3} kg·m²	2.80×10^{-3} kg·m²	1.74×10^{-3} kg·m²	1.78×10^{-3} kg·m²	1.17×10^{-3} kg·m²
Max. speed of input shaft		1800 rpm				
Allowable OHL of the input shaft	With C/B	1275 N				
	Without C/B	3924 N				
Internal frictional torque (Tinr) ISO viscosity grade VG320	5°C (5500 mm²/s)	5.7 N·m				
	10°C (3200 mm²/s)	4.5 N·m				
	15°C (2000 mm²/s)	3.6 N·m				
	20°C (1400 mm²/s)	2.9 N·m				
	30°C (650 mm²/s)	2.0 N·m				
	40°C (320 mm²/s)	1.6 N·m				
Weight	With C/B	120.0 kg				
	Without C/B	105.0 kg				
Lubricating oil (when shipped)		Bonnoc TS320 (ENEOS)				
Oil level		4.5 to 5.0 ℓ				
Worm torsion direction		Right helix				

Clutch/brake characteristics table

		Clutch (101-16-15-K-35G)	Brake (111-16-12-K-35G)
Dynamic frictional torque		90 N·m	90 N·m
Dynamic frictional torque		80 N·m	80 N·m
Rotor moment of inertia		6.30×10^{-3} kg·m²	-
Armature moment of inertia		9.05×10^{-3} kg·m²	6.35×10^{-3} kg·m²
Exciting voltage		24 VDC	24 VDC
Coil (20°C)	Current	1.46 A	1.46 A
	Capacity	35 W	35 W
	Resistance	16 Ω	16 Ω

HO135Rated output torque (N·m)

Reduction ratio / Input rpm		1/20	1/30	1/40	1/50	1/60
1800	With C/B	912	1090	970	886	801
	Without C/B	912	1090	970	886	801
1700	With C/B	937	1120	989	908	821
	Without C/B	937	1120	989	908	821
1600	With C/B	960	1140	1010	925	836
	Without C/B	960	1140	1010	925	836
1500	With C/B	985	1170	1040	941	852
	Without C/B	985	1170	1040	941	852
1400	With C/B	1010	1200	1060	967	873
	Without C/B	1010	1200	1060	967	873
1300	With C/B	1030	1230	1090	994	894
	Without C/B	1030	1230	1090	994	894
1200	With C/B	1060	1260	1120	1030	921
	Without C/B	1060	1260	1120	1030	921
1100	With C/B	1100	1300	1160	1060	944
	Without C/B	1100	1300	1160	1060	944
1000	With C/B	1150	1350	1210	1090	971
	Without C/B	1150	1350	1210	1090	971

HO135Efficiency (%)

Reduction ratio / Input rpm	1/20	(1/30)	1/40	(1/50)	1/60
1800	80	74	73	71	68
1700	80	74	72	70	67
1600	80	74	72	70	67
1500	79	74	71	69	66
1400	79	73	71	69	66
1300	79	72	70	68	65
1200	78	72	70	68	65
1100	78	71	70	68	64
1000	78	71	69	67	63

Dimensions

With C/B

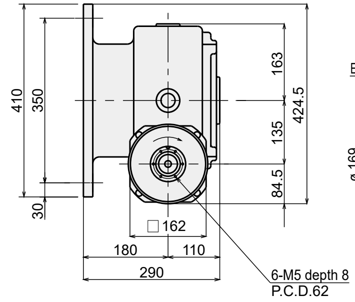

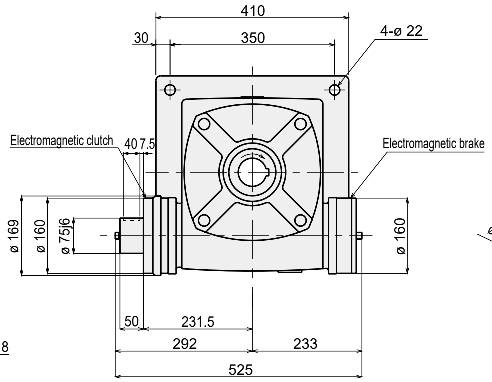

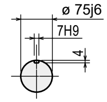

Reducer input shaft

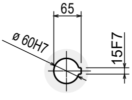

Hollow output shaft

Without C/B

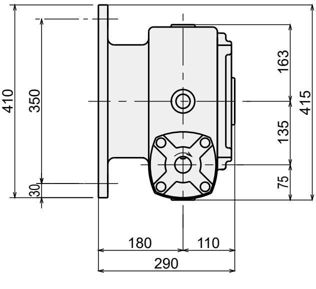

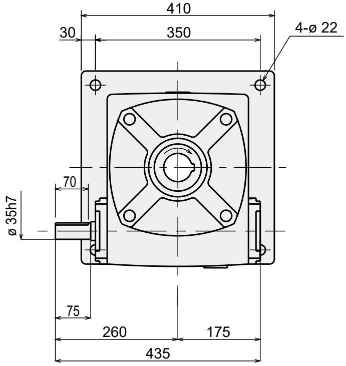

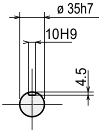

Reducer input shaft

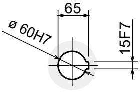

Hollow output shaft

Positions of the oil level gauge and the oil fill/drain port determined by the installation position of HO reducer

Position	1	2	3	4	5	6
Dimensions	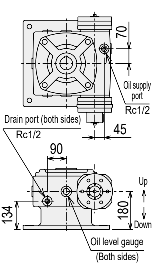	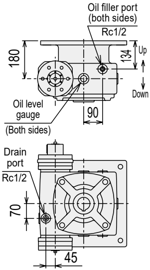	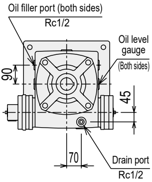	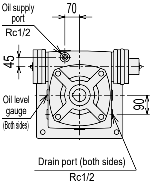	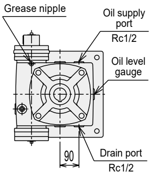	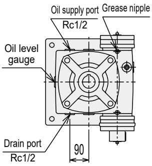

Option

● High torque worm reducer (**TE35**)

■ Characteristics table

Standard installation index		RG*S050	RG*T063	RG*L063	RC*S050
Reduction ratio		1/10, 1/20, 1/30, 1/40, 1/50, 1/60			
Max. speed of input shaft rpm		1800			
Reducer input shaft Converted moment of inertia kg·m^2	With C/B	0.882×10^{-4}			
	Without C/B	0.135×10^{-4}			
Input shaft OHL N	With C/B	78.5			
	Without C/B	147			
Internal frictional torque (Tinr) N·m	5°C	0.38			
	10°C	0.33			
	15°C	0.29			
	20°C	0.26			
	30°C	0.22			
	40°C	0.19			
Weight kg	With C/B	4.3			
	Without C/B	3.4			
Lubricating oil (when shipped)		Daphne Alpha Oil TE260 (Idemitsu)			
Oil level ℓ		0.17			
Worm torsion direction		Right helix			

■ Clutch/brake characteristics table

Descriptions	Clutch (CS-055-35-A-1G)	Brake (111-055-11-A-1G)
Dynamic frictional torque N·m	3.9	3.9
Rotor moment of inertia kg·m^2	0.400×10^{-4}	—
Armature moment of inertia kg·m^2	0.621×10^{-4}	0.347×10^{-4}
Exciting voltage (insulation class) V	DC24 (Class B)	DC24 (Class B)
Current A	0.25	0.25
Power consumption (20°C) W	6	6
Coil resistance Ω	96	96

■ TE35 rated output torque (N·m)

Reduction ratio / Input rpm		1/10	1/20	1/30	1/40	1/50	1/60
1800	With C/B	20.8	21.6	20.9	21.5	21.7	21.5
	Without C/B	20.8	21.6	20.9	21.5	21.7	21.5
1700	With C/B	21.3	22.1	21.4	21.9	22.2	22.1
	Without C/B	21.3	22.1	21.4	21.9	22.2	22.1
1600	With C/B	21.9	22.7	22.0	22.6	22.9	22.6
	Without C/B	21.9	22.7	22.0	22.6	22.9	22.6
1500	With C/B	22.6	23.4	22.6	23.3	23.6	23.2
	Without C/B	22.6	23.4	22.6	23.3	23.6	23.2
1400	With C/B	23.3	24.1	23.3	24.0	24.3	24.1
	Without C/B	23.3	24.1	23.3	24.0	24.3	24.1
1300	With C/B	24.1	24.9	24.1	24.8	25.2	24.9
	Without C/B	24.1	24.9	24.1	24.8	25.2	24.9
1200	With C/B	24.9	25.8	25.0	25.7	26.1	25.8
	Without C/B	24.9	25.8	25.0	25.7	26.1	25.8
1100	With C/B	25.9	26.9	25.9	26.7	27.0	26.6
	Without C/B	25.9	26.9	25.9	26.7	27.0	26.6
1000	With C/B	27.0	28.0	27.0	27.8	28.2	27.9
	Without C/B	27.0	28.0	27.0	27.8	28.2	27.9
900	With C/B	28.3	29.4	28.4	29.1	29.7	29.2
	Without C/B	28.3	29.4	28.4	29.1	29.7	29.2
800	With C/B	29.7	30.9	29.9	30.8	31.1	30.0
	Without C/B	29.7	30.9	29.9	30.8	31.1	30.0
700	With C/B	31.5	32.7	31.8	32.6	31.5	31.5
	Without C/B	31.5	32.7	31.8	32.6	31.5	31.5
600	With C/B	32.1	34.9	33.7	34.7	35.1	33.6
	Without C/B	33.7	34.9	33.7	34.7	35.1	33.6

■ TE35 efficiency (%)

Reduction ratio / input rpm	1/10	1/20	1/30	1/40	1/50	1/60
1800	87.6	79.7	71.3	66.6	62.5	57.7
1700	87.3	79.3	70.7	66.0	61.9	57.1
1600	87.0	78.9	70.2	65.4	61.3	56.5
1500	86.7	78.4	69.6	64.8	60.7	55.8
1400	86.4	77.9	69.0	64.2	60.0	55.1
1300	86.0	77.4	68.3	63.5	59.3	54.4
1200	85.6	76.8	67.6	62.7	58.5	53.6
1100	85.1	76.2	66.9	61.9	57.7	52.7
1000	85.7	75.6	66.0	61.1	56.9	51.9
900	84.2	74.9	65.2	60.2	55.9	50.9
800	83.6	74.1	64.2	59.2	54.9	49.9
700	82.9	73.2	63.1	58.1	53.8	48.8
600	82.2	72.2	61.9	56.9	52.6	47.5

Dimensions

With C/B

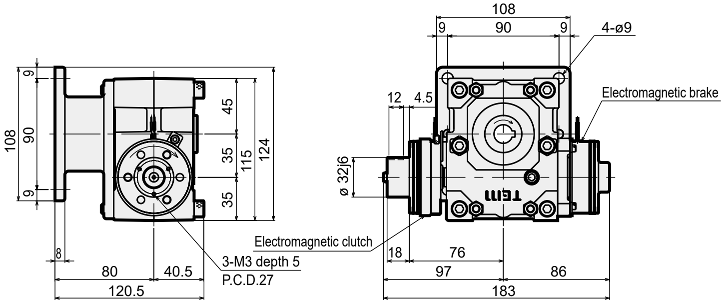

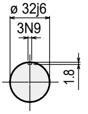

Reducer input shaft

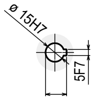

Hollow output shaft

Without C/B

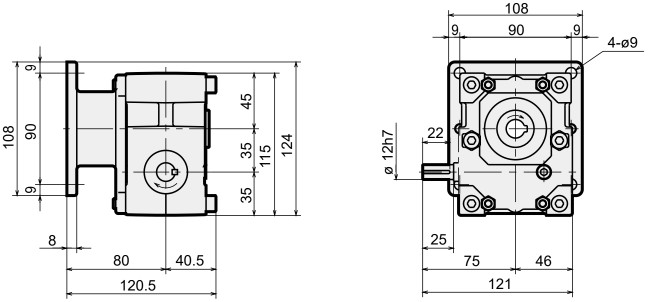

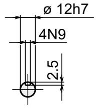

Reducer input shaft

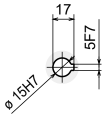

Hollow output shaft

Option

● High torque worm reducer (**TE42**)

Characteristics table

Standard installation index		RG*S063	RG*T080	RG*L080	PC*S063
Reduction ratio		1/10, 1/20, 1/30, 1/40, 1/50, 1/60			
Max. speed of input shaft rpm		1800			
Reducer input shaft Converted moment of inertia kg·m^2	With C/B	1.64×10^{-4}			
	Without C/B	0.3×10^{-4}			
Input shaft OHL N	With C/B	196			
	Without C/B	196			
Internal frictional torque (Tinr) N·m	5°C	0.61			
	10°C	0.52			
	15°C	0.45			
	20°C	0.40			
	30°C	0.33			
	40°C	0.29			
Weight kg	With C/B	6.3			
	Without C/B	5.0			
Lubricating oil (when shipped)		Daphne Alpha Oil TE260 (Idemitsu)			
Oil level ℓ		0.29			
Worm torsion direction		Right helix			

Clutch/brake characteristics table

Descriptions	Clutch (CS-06-35-A-43G)	Brake (111-06-11-A-109G)
Dynamic frictional torque N·m	5.5	5.5
Rotor moment of inertia kg·m^2	0.735×10^{-4}	—
Armature moment of inertia kg·m^2	1.05×10^{-4}	0.603×10^{-4}
Exciting voltage (insulation class) V	DC24 (Class B)	DC24 (Class B)
Current A	0.46	0.46
Power consumption (20°C) W	11	11
Coil resistance Ω	52	52

TE42 rated output torque (N·m)

● With C/B

Reduction ratio Input rpm	1/10	1/20	1/30	1/40	1/50	1/60
1800	30.5	31.4	30.5	31.1	31.5	31.9
1700	31.3	32.2	31.3	31.9	32.4	32.8
1600	32.2	33.1	32.1	32.8	33.3	33.7
1500	33.2	34.1	33.1	33.8	34.4	34.8
1400	34.2	35.3	34.2	34.8	35.3	35.9
1300	35.4	36.5	35.4	36.1	36.7	37.2
1200	36.7	37.8	36.6	37.4	38.1	38.4
1100	38.2	39.3	38.1	39.0	39.4	40.1
1000	39.9	41.0	39.8	40.6	41.3	41.8
900	41.8	43.0	41.7	42.6	43.3	43.9
800	44.1	45.4	43.9	44.8	45.4	46.1
700	46.0	48.2	46.7	47.6	48.2	49.0
600	45.6	51.5	49.8	51.0	51.9	52.4

● Without C/B

Reduction ratio Input rpm	1/10	1/20	1/30	1/40	1/50	1/60
1800	31.4	32.3	31.4	32.0	32.6	33.1
1700	32.3	33.2	32.3	32.8	33.4	33.9
1600	33.2	34.1	33.1	33.8	34.2	34.7
1500	34.1	35.1	34.1	34.8	35.3	35.7
1400	35.2	36.2	35.2	35.9	36.4	36.9
1300	36.4	37.5	36.3	37.1	37.6	38.2
1200	37.7	38.8	37.6	38.4	39.0	39.4
1100	39.2	40.4	39.1	39.9	40.4	41.2
1000	41.0	42.0	40.8	41.6	42.1	42.7
900	42.9	44.1	42.8	43.6	44.2	44.9
800	45.2	46.4	45.1	46.0	46.8	47.3
700	47.8	49.2	47.7	48.6	49.3	50.3
600	51.2	52.6	51.0	52.2	52.8	53.4

Dimensions

With C/B

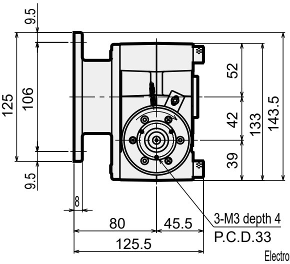

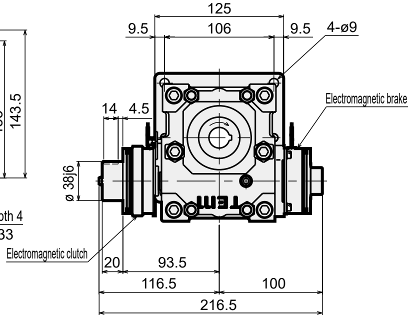

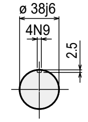

Reducer input shaft

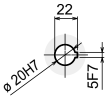

Hollow output shaft

Without C/B

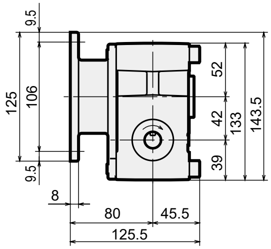

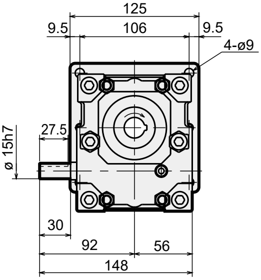

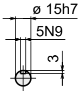

Reducer input shaft

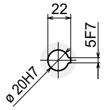

Hollow output shaft

TE42 Efficiency (%)

Reduction ratio / Input rpm	1/10	1/20	1/30	1/40	1/50	1/60
1800	88.4	80.9	72.8	68.2	64.3	60.8
1700	88.1	80.5	72.3	67.7	63.7	60.2
1600	87.8	80.0	71.7	67.1	63.1	59.6
1500	87.5	79.6	71.2	66.4	62.4	58.9
1400	87.2	79.1	70.5	65.8	61.7	58.2
1300	86.8	78.6	69.9	65.0	61.0	57.4
1200	86.4	78.0	69.1	64.3	60.2	56.6
1100	85.9	77.4	68.4	63.5	59.3	55.8
1000	85.5	76.7	67.5	62.6	58.4	54.8
900	84.9	76.0	66.6	61.6	57.5	53.9
800	84.3	75.1	65.6	60.6	56.4	52.8
700	83.7	74.2	64.5	59.4	55.2	51.6
600	82.9	73.2	63.2	58.1	54.0	50.4

Option

● High torque worm reducer (**TE51**)

■ Characteristics table

Standard installation index		RG*S080	RG*T110	RG*L110	PC*S080
Reduction ratio		1/10, 1/20, 1/30, 1/40, 1/50, 1/60			
Max. speed of input shaft rpm		1800			
Reducer input shaft Converted moment of inertia kg·m²	With C/B	5.36×10^{-4}			
	Without C/B	1.42×10^{-4}			
Input shaft OHL N	With C/B	196			
	Without C/B	491			
Internal frictional torque (Tinr) N·m	5°C	1.25			
	10°C	1.00			
	15°C	0.85			
	20°C	0.72			
	30°C	0.53			
	40°C	0.45			
Weight kg	With C/B	12.7			
	Without C/B	10.4			
Lubricating oil (when shipped)		Daphne Alpha Oil TE260 (Idemitsu)			
Worm torsion direction		Right helix			

■ Clutch/brake characteristics table

Descriptions	Clutch (101-08-15-A-139G)	Brake (111-08-11-A-61G)
Dynamic frictional torque N·m	11	11
Rotor moment of inertia kg·m²	2.24×10^{-4}	—
Armature moment of inertia kg·m²	3.00×10^{-4}	1.71×10^{-4}
Exciting voltage (insulation class) V	DC24 (Class B)	DC24 (Class B)
Current A	0.63	0.63
Power consumption (20°C) W	15	15
Coil resistance Ω	38	38

■ TE51 rated output torque (N·m)

Reduction ratio / Input rpm		1/10	1/20	1/30	1/40	1/50	1/60
1800	With C/B	82.7	90.4	92.0	90.3	87.2	82.5
	Without C/B	82.7	90.4	92.0	90.3	87.2	82.5
1700	With C/B	85.0	92.5	94.3	92.4	89.2	84.3
	Without C/B	85.0	92.5	94.3	92.4	89.2	84.3
1600	With C/B	87.3	94.7	96.8	94.5	91.2	86.1
	Without C/B	87.3	94.7	96.8	94.5	91.2	86.1
1500	With C/B	89.6	97.0	99.3	96.7	95.3	88.0
	Without C/B	89.6	97.0	99.3	96.7	95.3	88.0
1400	With C/B	92.1	99.3	102	99.0	97.5	90.0
	Without C/B	92.1	99.3	102	99.0	97.5	90.0
1300	With C/B	94.6	102	104	101	98.1	92.0
	Without C/B	94.6	102	104	101	98.1	92.0
1200	With C/B	97.1	104	107	103	98.1	92.0
	Without C/B	97.1	104	107	103	98.1	92.0
1100	With C/B	97.0	104	109	103	98.1	92.0
	Without C/B	99.8	104	109	103	98.1	92.0
1000	With C/B	96.6	104	109	103	98.1	92.0
	Without C/B	100	104	109	103	98.1	92.0
900	With C/B	96.0	104	109	103	98.1	92.0
	Without C/B	100	104	109	103	98.1	92.0
800	With C/B	95.5	104	109	103	98.1	92.0
	Without C/B	100	104	109	103	98.1	92.0
700	With C/B	94.8	104	109	103	98.1	92.0
	Without C/B	100	104	109	103	98.1	92.0
600	With C/B	94.1	104	109	103	98.1	92.0
	Without C/B	100	104	109	103	98.1	92.0

■ TE51 efficiency (%)

Reduction ratio / Input rpm	1/10	1/20	1/30	1/40	1/50	1/60
1800	90.3	84.2	77.1	73.1	69.1	65.5
1700	90.1	83.8	76.6	72.6	68.6	65.0
1600	89.8	83.5	76.1	72.1	68.0	64.4
1500	89.5	83.1	75.6	71.5	67.4	63.7
1400	89.2	82.6	75.0	70.9	66.7	63.0
1300	88.9	82.2	74.4	70.2	66.0	62.3
1200	88.6	81.7	73.8	69.5	65.3	61.5
1100	88.2	81.1	73.0	68.8	64.5	60.7
1000	87.8	80.5	72.3	67.9	63.6	59.8
900	87.3	79.9	71.4	67.0	62.7	58.8
800	86.8	79.2	70.5	66.1	61.6	57.8
700	86.2	78.4	69.4	65.0	60.5	56.6
600	85.5	77.4	68.3	63.8	59.3	55.3

Dimensions

With C/B

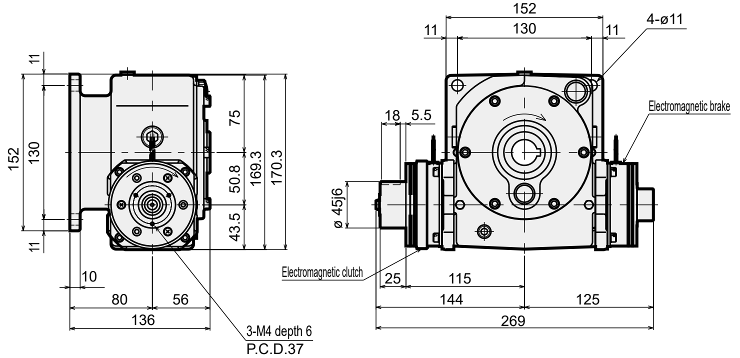

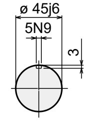

Reducer input shaft

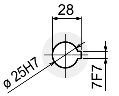

Hollow output shaft

Without C/B

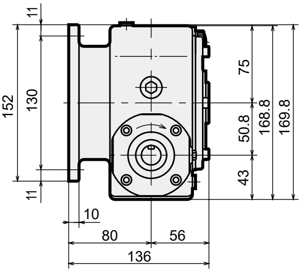

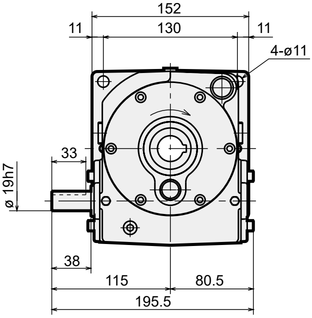

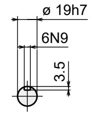

Reducer input shaft

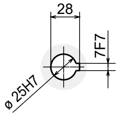

Hollow output shaft

Oil volume and positions of oil level gauge, pressure vent and drain port are determined by the installation direction of the TE reducer.

Position	1	2	3	4	5	6
Dimensions	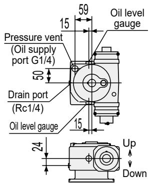	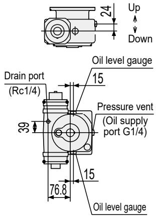	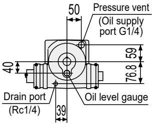	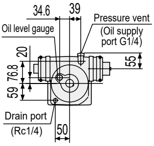	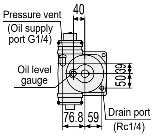	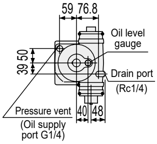
Oil level (ℓ)	0.45	0.46	0.32	0.58	0.47	0.43

Option

● High torque worm reducer (**TE63**)

■ Characteristics table

Standard installation index		RG*S110	RG*T140	RG*L140	PC*S100
Reduction ratio		1/10, 1/20, 1/30, 1/40, 1/50, 1/60			
Max. speed of input shaft rpm		1800			
Reducer input shaft Converted moment of inertia kg·m²	With C/B	16.7×10^{-4}			
	Without C/B	3.28×10^{-4}			
Input shaft OHL N	With C/B	294			
	Without C/B	785			
Internal frictional torque (Tinr) N·m	5°C	2.03			
	10°C	1.63			
	15°C	1.34			
	20°C	1.14			
	30°C	0.90			
	40°C	0.76			
Weight kg	With C/B	20.2			
	Without C/B	16.0			
Lubricating oil (when shipped)		Daphne Alpha Oil TE260 (Idemitsu)			
Worm torsion direction		Right helix			

■ Clutch/brake characteristics table

Descriptions		Clutch (101-10-15-A-131G)	Brake (111-10-11-A-64G)
Dynamic frictional torque	N·m	22	22
Rotor moment of inertia	kg·m²	6.78×10^{-4}	—
Armature moment of inertia	kg·m²	9.45×10^{-4}	6.63×10^{-4}
Exciting voltage (insulation class)	V	DC24 (Class B)	DC24 (Class B)
Current	A	0.83	0.83
Power consumption (20°C)	W	20	20
Coil resistance	Ω	29	29

■ TE63 rated output torque (N·m)

Reduction ratio / Input rpm		1/10	1/20	1/30	1/40	1/50	1/60
1800	With C/B	150	167	168	167	162	153
	Without C/B	150	167	168	167	162	153
1700	With C/B	155	172	174	172	167	157
	Without C/B	155	172	174	172	167	157
1600	With C/B	161	178	179	177	171	162
	Without C/B	161	178	179	177	171	162
1500	With C/B	166	183	185	183	176	166
	Without C/B	166	183	185	183	176	166
1400	With C/B	172	189	191	189	181	170
	Without C/B	172	189	191	189	181	170
1300	With C/B	178	195	198	195	187	175
	Without C/B	178	195	198	195	187	175
1200	With C/B	184	201	204	201	192	180
	Without C/B	184	201	204	201	192	180
1100	With C/B	191	208	211	207	197	185
	Without C/B	191	208	211	207	197	185
1000	With C/B	195	214	218	213	202	186
	Without C/B	197	214	218	213	202	186
900	With C/B	194	218	224	216	202	186
	Without C/B	204	218	224	216	202	186
800	With C/B	193	218	224	216	202	186
	Without C/B	206	218	224	216	202	186
700	With C/B	191	218	224	216	202	186
	Without C/B	206	218	224	216	202	186
600	With C/B	190	218	224	216	202	186
	Without C/B	206	218	224	216	202	186

■ TE63 efficiency (%)

Reduction ratio / input rpm	1/10	1/20	1/30	1/40	1/50	1/60
1800	91.1	85.0	78.6	74.2	71.1	68.1
1700	90.8	84.6	78.2	73.7	70.5	67.6
1600	90.6	84.2	77.7	73.2	69.9	66.9
1500	90.3	83.8	77.2	72.6	69.3	66.3
1400	90.1	83.4	76.6	71.9	68.7	65.6
1300	89.7	82.9	76.0	71.2	67.9	64.9
1200	89.4	82.4	75.3	70.5	67.2	64.1
1100	89.0	81.8	74.6	69.7	66.3	63.2
1000	88.6	81.2	73.8	68.8	65.4	62.3
900	88.1	80.5	72.9	67.9	64.4	61.3
800	87.6	79.8	71.9	66.8	63.4	60.2
700	87.0	78.9	70.8	65.6	62.2	59.0
600	86.3	77.9	69.6	64.3	60.8	57.6

Dimensions

With C/B

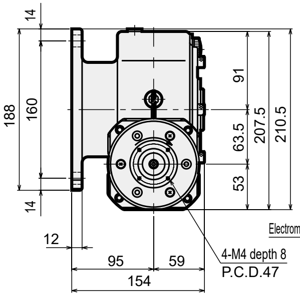

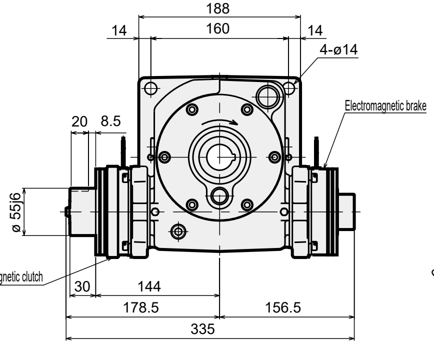

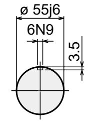

Reducer input shaft

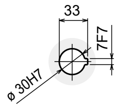

Hollow output shaft

Without C/B

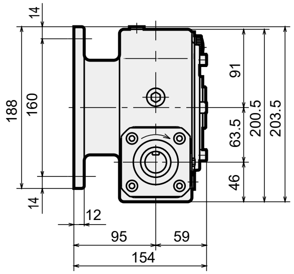

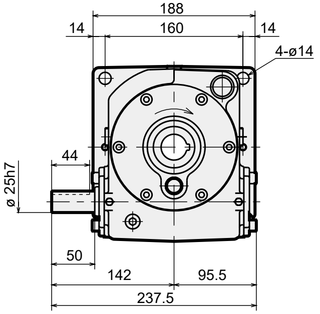

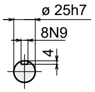

Reducer input shaft

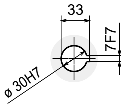

Hollow output shaft

Oil volume and positions of oil level gauge, pressure vent and drain port are determined by the installation direction of the TE reducer.

Position	1	2	3	4	5	6
Dimensions	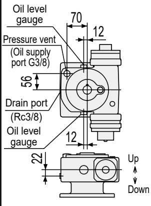	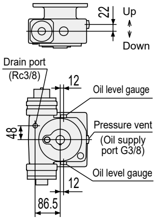	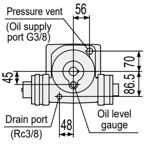	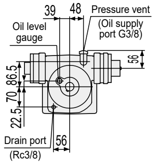	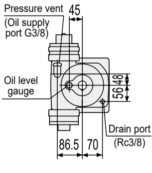	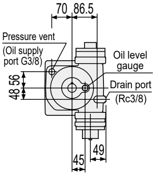
Oil level (ℓ)	0.62	0.64	0.45	0.78	0.65	0.61

Option

● High torque worm reducer (**TE80**)

■ Characteristics table

Standard installation index		RG*S140	RG*T180	RG*L180	PC*S125
Reduction ratio		1/10, 1/20, 1/30, 1/40, 1/50, 1/60			
Max. speed of input shaft rpm		1800			
Reducer input shaft Converted moment of inertia kg·m^2	With C/B	46.0×10^{-4}			
	Without C/B	6.49×10^{-4}			
Input shaft OHL N	With C/B	687			
	Without C/B	1570			
Internal frictional torque (Tinr) N·m	5°C	3.56			
	10°C	2.72			
	15°C	2.19			
	20°C	1.83			
	30°C	1.40			
	40°C	1.21			
Weight kg	With C/B	35.6			
	Without C/B	28.5			
Lubricating oil (when shipped)		Daphne Alpha Oil TE260 (Idemitsu)			
Worm torsion direction		Right helix			

■ Clutch/brake characteristics table

Descriptions	Clutch (101-12-15-A-164G)	Brake (111-12-11-A-83G)
Dynamic frictional torque N·m	45	45
Rotor moment of inertia kg·m^2	21.4×10^{-4}	—
Armature moment of inertia kg·m^2	27.5×10^{-4}	18.1×10^{-4}
Exciting voltage (insulation class) V	DC24 (Class B)	DC24 (Class B)
Current A	1.09	1.09
Power consumption (20°C) W	25	25
Coil resistance Ω	23	23

■ TE80 rated output torque (N·m)

Reduction ratio / Input rpm		1/10	1/20	1/30	1/40	1/50	1/60
1800	With C/B	280	315	316	316	308	292
	Without C/B	280	315	316	316	308	292
1700	With C/B	291	327	328	327	318	301
	Without C/B	291	327	328	327	318	301
1600	With C/B	304	339	342	339	329	311
	Without C/B	304	339	342	339	329	311
1500	With C/B	316	352	355	352	341	321
	Without C/B	316	352	355	352	341	321
1400	With C/B	330	365	369	365	353	332
	Without C/B	330	365	369	365	353	332
1300	With C/B	343	379	384	379	365	342
	Without C/B	343	379	384	379	365	342
1200	With C/B	358	393	399	393	378	353
	Without C/B	358	393	399	393	378	353
1100	With C/B	373	408	415	407	391	365
	Without C/B	373	408	415	407	391	365
1000	With C/B	389	423	431	422	404	377
	Without C/B	389	423	431	422	404	377
900	With C/B	403	439	448	438	418	386
	Without C/B	405	439	448	438	418	386
800	With C/B	401	454	466	451	423	386
	Without C/B	422	454	466	451	423	386
700	With C/B	398	454	470	451	423	386
	Without C/B	433	454	470	451	423	386
600	With C/B	395	454	470	451	423	386
	Without C/B	433	454	470	451	423	386

■ TE80 efficiency (%)

Reduction ratio / input rpm	1/10	1/20	1/30	1/40	1/50	1/60
1800	92.2	86.8	81.0	77.1	73.9	71.4
1700	92.0	86.5	80.6	76.6	73.4	70.8
1600	91.7	86.2	80.1	76.1	72.8	70.2
1500	91.5	85.8	79.6	75.5	72.2	69.6
1400	91.2	85.4	79.1	74.9	71.6	68.9
1300	91.0	85.0	78.5	74.3	70.9	68.2
1200	90.6	84.5	77.9	73.6	70.1	67.4
1100	90.3	83.9	77.2	72.8	69.3	66.5
1000	89.9	83.4	76.4	71.9	68.4	65.6
900	89.5	82.7	75.6	71.0	67.4	64.6
800	89.0	82.0	74.6	69.9	66.3	63.5
700	88.4	81.1	73.5	68.8	65.1	62.2
600	87.7	80.2	72.3	67.5	63.7	60.8

Dimensions

With C/B

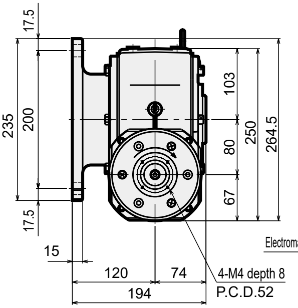

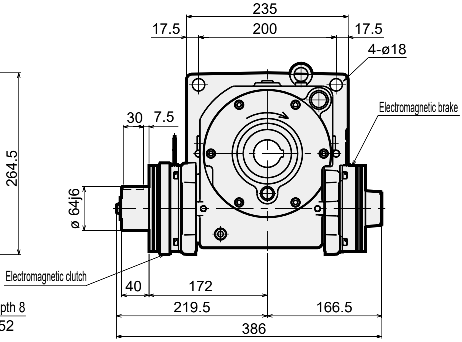

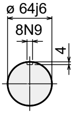

Reducer input shaft

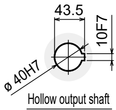

Hollow output shaft

Without C/B

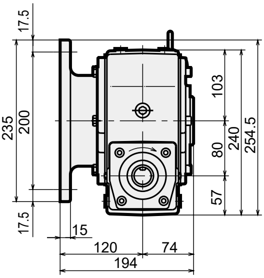

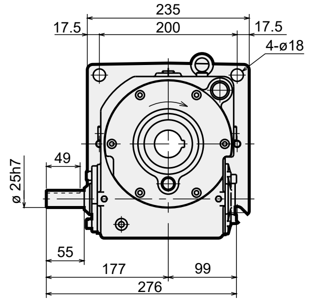

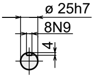

Reducer input shaft

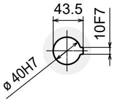

Hollow output shaft

Oil volume and positions of oil level gauge, pressure vent and drain port are determined by the installation direction of the TE reducer.

Position	1	2	3	4	5	6
Dimensions	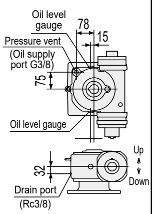	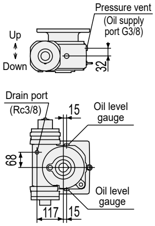	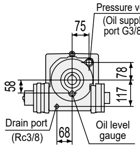	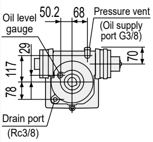	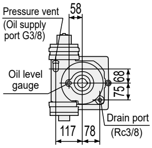	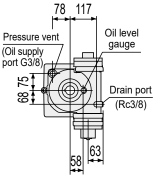
Oil level (ℓ)	1.2	1.2	0.8	1.6	1.2	1.2

Option

● High torque worm reducer (**TE100**)

■ Characteristics table

Standard installation index			RG*S180	RG*T250	RG*L250	PC*S160
Reduction ratio			1/10, 1/20, 1/30, 1/40, 1/50, 1/60			
Max. speed of input shaft	rpm		1800			
Reducer input shaft Converted moment of inertia	kg·m^2	With C/B	53.2 × 10^{-4}			
		Without C/B	13.7 × 10^{-4}			
Input shaft OHL	N	With C/B	883			
		Without C/B	1962			
Internal frictional torque (Tinr)	N·m	5°C	6.11			
		10°C	4.56			
		15°C	3.55			
		20°C	2.90			
		30°C	2.18			
		40°C	1.82			
Weight	kg	With C/B	61.1			
		Without C/B	54.0			
Lubricating oil (when shipped)			Daphne Alpha Oil TE260 (Idemitsu)			
Worm torsion direction			Right helix			

■ Clutch/brake characteristics table

Descriptions		Clutch (101-12-15-A-164G)	Brake (111-12-11-A-83G)
Dynamic frictional torque	N·m	45	45
Rotor moment of inertia	kg·m^2	21.4×10^{-4}	—
Armature moment of inertia	kg·m^2	27.5×10^{-4}	18.1×10^{-4}
Exciting voltage (insulation class)	V	DC24 (Class B)	DC24 (Class B)
Current	A	1.09	1.09
Power consumption (20°C)	W	25	25
Coil resistance	Ω	23	23

■ TE100 rated output torque (N·m)

Reduction ratio / Input rpm		1/10	1/20	1/30	1/40	1/50	1/60
1800	With C/B	419	525	530	525	494	474
	Without C/B	470	525	530	525	494	474
1700	With C/B	418	542	548	526	515	492
	Without C/B	486	542	548	526	515	492
1600	With C/B	417	547	553	550	537	512
	Without C/B	503	547	553	550	537	512
1500	With C/B	416	573	579	575	559	532
	Without C/B	508	573	579	575	559	532
1400	With C/B	415	599	606	601	583	553
	Without C/B	534	599	606	601	583	553
1300	With C/B	414	627	634	628	607	574
	Without C/B	561	627	634	628	607	574
1200	With C/B	413	656	664	657	633	597
	Without C/B	589	656	664	657	633	597
1100	With C/B	411	687	695	687	659	620
	Without C/B	618	687	695	687	659	620
1000	With C/B	410	719	727	719	687	645
	Without C/B	649	719	727	719	687	645
900	With C/B	408	752	761	751	716	670
	Without C/B	682	752	761	751	716	670
800	With C/B	406	752	797	786	746	696
	Without C/B	716	787	797	786	746	696
700	With C/B	403	744	834	822	765	701
	Without C/B	752	824	834	822	765	701
600	With C/B	401	736	844	826	765	701
	Without C/B	775	832	844	826	765	701

■ TE100 efficiency (%)

Reduction ratio / input rpm	1/10	1/20	1/30	1/40	1/50	1/60
1800	93.1	88.2	83.3	79.2	76.5	74.0
1700	92.9	87.9	82.9	78.8	76.0	73.4
1600	92.7	87.5	82.5	78.3	75.4	72.9
1500	92.5	87.2	82.0	77.7	74.8	72.2
1400	92.3	86.8	81.5	77.1	74.2	71.6
1300	92.0	86.4	81.0	76.5	73.5	70.9
1200	91.7	86.0	80.4	75.8	72.8	70.1
1100	91.4	85.5	79.7	75.1	72.0	69.2
1000	91.0	84.9	79.0	74.2	71.1	68.3
900	90.6	84.3	78.2	73.3	70.1	67.3
800	90.2	83.6	77.3	72.3	69.0	66.2
700	89.6	82.7	76.2	71.1	67.8	64.9
600	89.0	81.8	75.0	69.7	66.4	63.5

Dimensions

With C/B

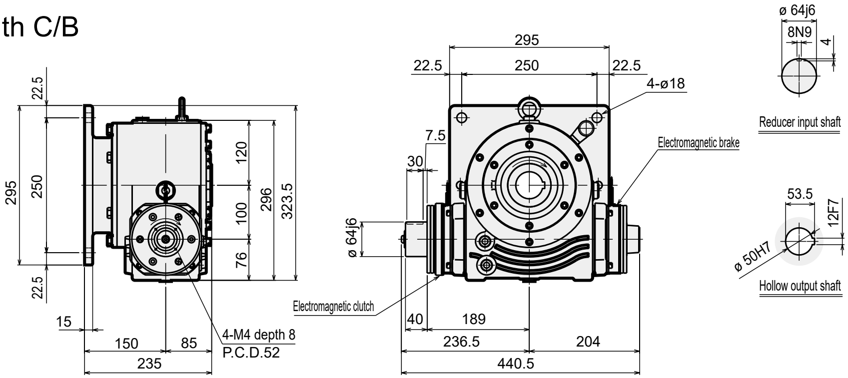

Without C/B

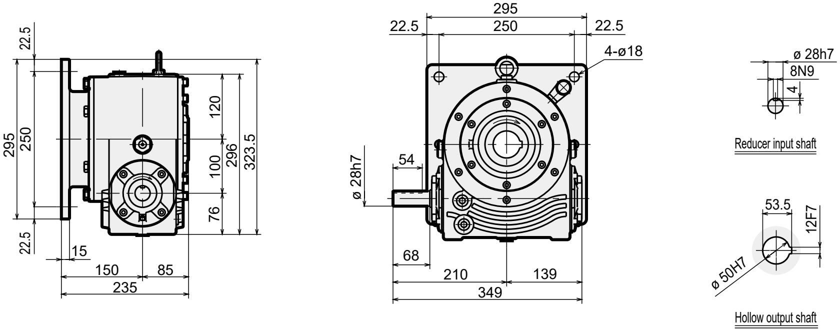

Oil volume and positions of oil level gauge, pressure vent and drain port are determined by the installation direction of the TE reducer.

Position	1	2	3	4	5	6
Dimensions	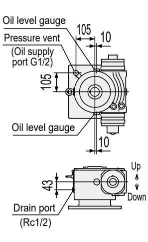	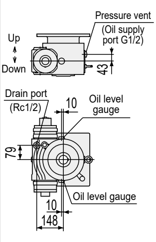	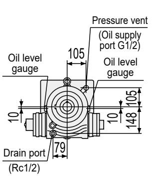	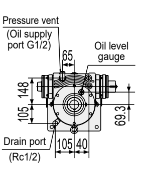	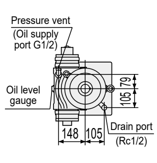	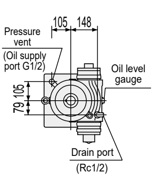
Oil level (ℓ)	2.1	2.1	2.6	3.0	2.1	2.1

Option

● High torque worm reducer (**TE150**)

■ Characteristics table

Standard installation index		RG□S250	PC□S200	PC□S250
Reduction ratio		1/10, 1/20, 1/30, 1/40, 1/50, 1/60		
Max. speed of input shaft rpm		1800		
Reducer input shaft Converted moment of inertia $kg{\cdot}m^2$	With C/B	185×10^{-4}		
	Without C/B	58.3×10^{-4}		
Input shaft OHL N	With C/B	1275		
	Without C/B	3924		
Internal frictional torque (Tinr) N·m	5°C	10.6		
	10°C	7.96		
	15°C	6.15		
	20°C	4.95		
	30°C	3.58		
	40°C	2.90		
Weight kg	With C/B	156.5		
	Without C/B	144		
Lubricating oil (when shipped)		Daphne Alpha Oil TE260 (Idemitsu)		
Worm torsion direction		Right helix		

■ Clutch/brake characteristics table

Descriptions	Clutch (101-16-15-A-131G)	Brake (111-16-11-A-65G)
Dynamic frictional torque N·m	90	90
Rotor moment of inertia $kg{\cdot}m^2$	63.0×10^{-4}	—
Armature moment of inertia $kg{\cdot}m^2$	90.5×10^{-4}	63.5×10^{-4}
Exciting voltage (insulation class) V	DC24 (Class B)	DC24 (Class B)
Current A	1.46	1.46
Power consumption (20°C) W	35	35
Coil resistance Ω	16	16

■ TE150 rated output torque (N·m) (With C/B)

Reduction ratio / Input rpm	1/10	1/20	1/30	1/40	1/50	1/60
1800	848	1290	1310	1300	1250	1190
1700	846	1340	1350	1340	1300	1230
1600	845	1380	1400	1390	1340	1270
1500	843	1440	1450	1440	1390	1320
1400	842	1490	1490	1500	1450	1370
1300	840	1550	1520	1540	1460	1390
1200	837	1580	1550	1580	1550	1470
1100	835	1582	1590	1620	1640	1560
1000	832	1573	1640	1660	1710	1650
900	829	1564	1690	1710	1760	1750
800	825	1552	1750	1780	1820	1810
700	821	1539	1820	1850	1890	1880
600	815	1523	1910	1930	1980	1970

■ TE150 rated output torque (N·m) (Without C/B)

Reduction ratio / Input rpm	1/10	1/20	1/30	1/40	1/50	1/60
1800	1160	1290	1310	1230	1250	1190
1700	1200	1340	1350	1340	1300	1200
1600	1240	1380	1400	1390	1340	1270
1500	1290	1440	1440	1440	1390	1320
1400	1340	1490	1470	1490	1450	1370
1300	1400	1530	1500	1520	1460	1390
1200	1470	1570	1540	1560	1550	1470
1100	1540	1610	1580	1600	1640	1560
1000	1580	1660	1623	1650	1690	1650
900	1660	1710	1680	1700	1740	1740
800	1730	1770	1740	1760	1800	1800
700	1800	1840	1810	1830	1874	1870
600	1880	1930	1890	1910	1960	1950

■ TE150 Efficiency (%)

Reduction ratio / Input rpm	1/10	1/20	1/30	1/40	1/50	1/60
1800	94.2	90.2	85.6	68.2	80.5	77.5
1700	94.0	90.0	85.3	67.7	80.1	77.1
1600	93.9	89.7	84.9	67.1	79.6	76.5
1500	93.7	89.4	84.6	66.4	79.1	76.0
1400	93.5	89.1	84.1	65.8	78.6	75.4
1300	93.3	88.8	83.6	65.0	77.9	74.7
1200	93.0	88.4	83.1	64.3	77.3	74.0
1100	92.8	87.9	82.5	63.5	76.5	73.1
1000	92.4	87.4	81.8	62.6	75.7	72.2
900	92.1	86.9	81.1	61.6	74.8	71.2
800	91.7	86.2	80.2	60.6	73.7	70.1
700	91.2	85.5	79.2	59.4	72.5	68.8
600	90.6	84.6	78.0	58.1	71.1	67.3

Dimensions

With C/B

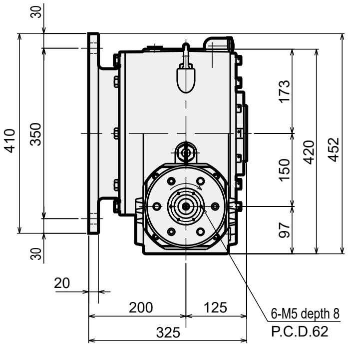

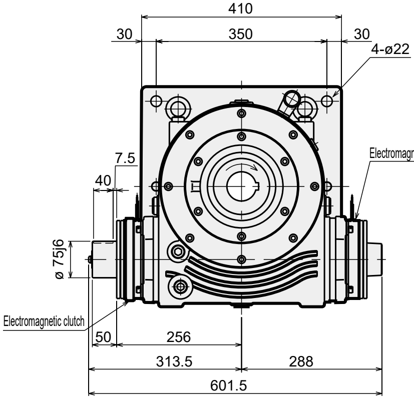

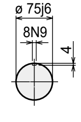

Reducer input shaft

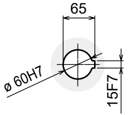

Hollow output shaft

Without C/B

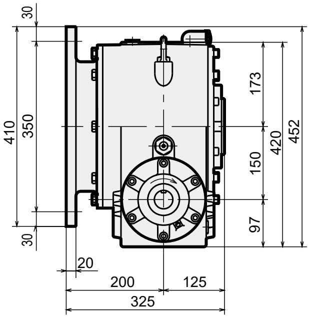

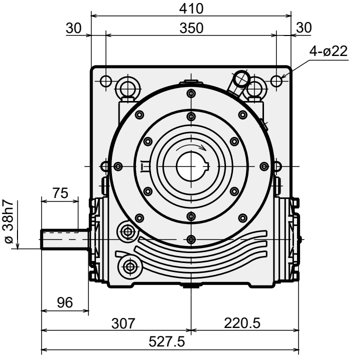

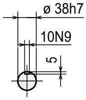

Reducer input shaft

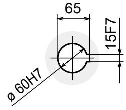

Hollow output shaft

Oil volume and positions of oil level gauge, pressure vent and drain port are determined by the installation direction of the TE reducer.

Position	1	2	3	4	5	6
Dimensions	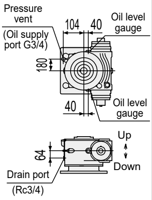	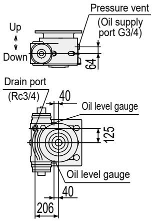	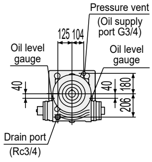	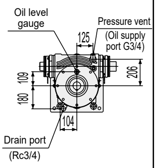	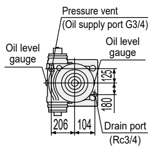	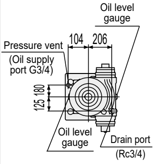
Oil level (ℓ)	6.0	6.0	6.9	8.0	6.0	6.0

Option

● List of overload protective devices for output shaft of the index drive

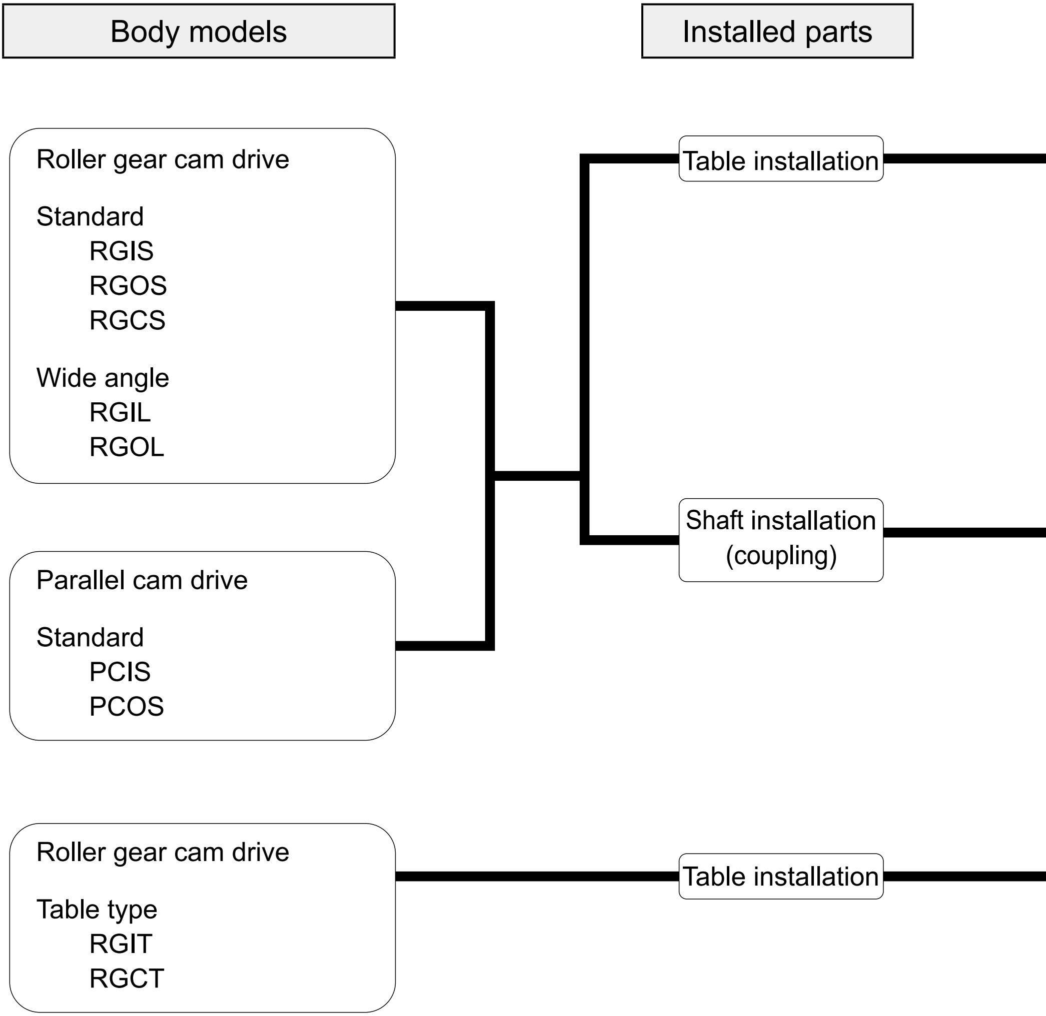

Body models

Installed parts

Roller gear cam drive

Standard
RGIS
RGOS
RGCS

Wide angle
RGIL
RGOL

Parallel cam drive

Standard
PCIS
PCOS

Table installation

Shaft installation (coupling)

Roller gear cam drive

Table type
RGIT
RGCT

Table installation

Overload protective devices for output shaft

Page

TSF Series

TGX Series

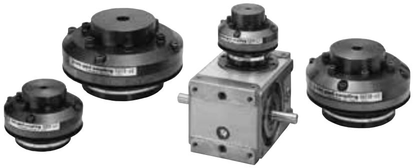

TST Series

Option

● Torque saver (TSF/TST)

■ Features

1. High resetting accuracy.
2. High rotational rigidity.
3. Accurate release when overload is applied.
4. Release torque adjustable without steps.
5. One-point setting function equipped.
6. Overload detection available (combined with proximity switch)
7. High thrust rigidity and high radial rigidity.

■ Movement overview

The release torque is adjusted by changing the force of the (5) spring with the (6) adjusting nut. When overload exceeding the release torque is applied to the (1) table, the (4) roller held in the (2) drive plate groove comes out because of the force of the (5) spring cutting off the torque conveyed from the output shaft. The (7) pusher plate moves and can be detected with the (10) proximity switch. When the table is manually turned after removing the overload, it automatically returns to its original position.

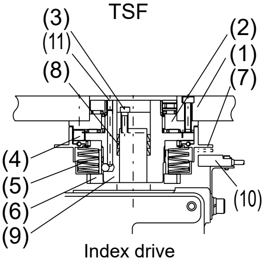

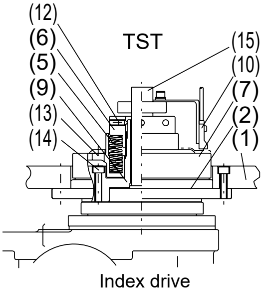

(1)	Table	(6)	Adjust nut	(11)	Lock pin
(2)	Drive plate	(7)	Pusher plate	(12)	Set screw
(3)	Hexagon socket head cap screw	(8)	Taper ring	(13)	Bolt through-hole
(4)	Roller	(9)	Drive boss	(14)	Mounting bolt
(5)	Spring	(10)	Proximity switch	(15)	Fixed shaft

When designing or making a selection

⚠ CAUTION

1. Confirm that the actual load torque of index drive Te × 1.3 is within the release torque adjusting range.
2. If an external load exists while index drive is stopped (dwelling), confirm that this is less than the release torque.
3. When index drive is stopped for emergency when the output is moving, take time to stop the system so that a torque saver is not released.
4. If backlash exists in the driving system or if rigidity is not sufficient, a load exceeding the calculation may be applied.
   Select index drive and adjust the release torque of a torque saver, taking the load characteristics well into consideration.
5. When you select index drive, calculate the load conditions taking into consideration the moment of inertia of a torque saver itself as well as the table installed, workpiece, etc.
6. When you order index drive and a torque saver as a set, they can be delivered and assembled with customized specifications to enable installation depending on the size of the index drive the output shaft (TSF installation) and fixed shaft (TST installation).
   When you order only a torque saver, note the output shaft and the fixed shaft specifications on the side of the torque saver which is to be installed.
7. When you install a torque saver exceeding the specification of the index number n=12 of index drive, you may not be able to adjust the proper release torque. Contact CKD when you select a model.

Installation and adjustment

⚠ CAUTION

■ Release torque adjustment

The release torque of a torque saver is steplessly adjustable by turning the adjusting nut.
Adjust the release torque based on the release torque adjusting range for each characteristic value and the change in torque for 1 rotation of the adjusting nut. After adjustment, confirm that it is correctly adjusted using a torque gauge.

(1) Calculate the actual load torque Te of index drive.
(2) Calculate the release torque Taj. (generally, Taj = Te × 1.3)
(3) Loosen the lock pin at the end of the drive boss and the hexagon socket head cap screw at the side of the adjusting nut. (TSF5 to 18)
Loosen the hexagon socket head cap screw at the side of the adjusting nut. (TST6 to 11)
(4) Screw in the adjusting nut based on the change in torque for 1 rotation of the adjusting nut.
(5) Confirm that it is correctly adjusted using a torque gauge. (Readjust if necessary.)
(6) Securely fix the adjusting nut.
Screw in the lock pin at the end of the drive boss and the hexagon socket head cap screw at the side of the adjusting nut. (TSF5 to 18)
Screw in the hexagon socket head cap screw at the side of the adjusting nut. (TST6 to 11)
Refer to the table below for tightening torque.

● Lock pin tightening torque

Series	TSF5	TSF6	TSF8	TSF11	TSF14	TSF18
Thread size	M4	M5	M5	M8	M8	M8
Tightening torque (N·m)	1.7	3.1	3.1	14	14	14

● Tightening torque of the hexagon socket head cap screw at the side of the adjusting nut.

Series	TST6	TST8	TST11
Thread size	M5	M6	M6
Tightening torque (N·m)	3.1	5.9	5.9

● Tightening torque of the hexagon socket head cap screw at the side of the adjusting nut

Series	TSF5	TSF6	TSF8	TSF11	TSF14	TSF18
Thread size	M4	M4	M5	M5	M5	M6
Tightening torque (N·m)	3.7	3.7	7.5	7.5	7.5	13

Option

● Torque saver (TSF/TST)

Installation & adjustment

⚠ CAUTION

[CAUTION]

1. The release torque is set at min. within the adjusting range for delivery unless specified.
   Adjust the release torque when installed on the unit.
   (It is set at the center in the adjusting range when discrete TSF/TST is shipped.)
2. After adjustment of the release torque, confirm that it is correctly adjusted using a torque gauge.
3. When the adjusting nut is tightened exceeding the max. tightening torque T, it may not release when overload is applied.
   (TST)
   When you adjust the release torque, the pressure plate may rotate together with the adjusting nut because of the spring force to hide the through hole for the mounting bolt.
   Mark the through hole position for assembly and disassembly as a guide.

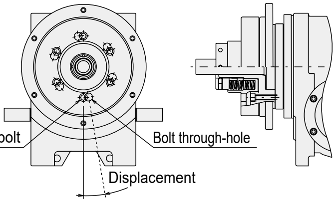

■ Installation

1 Be sure to securely fix a torque saver and the table.

2 When release detection switch is installed
The detection distance of the proximity switch may vary depending on temperature and voltage. Confirm that the release of a torque saver is correctly detected after installation.

3 When you install a table at the spigot section of a torque saver, surface runout may increase if you forcibly pound it with a hammer.

4 When you install a table to a torque saver, be sure to check the alignment. If eccentricity is significant, indexing error may increase.
Runout of drive plate after installation (TSF)
A: End surface runout 0.04 or less.
B: Radial runout 0.04 or less.
When you install a taper ring, the inner ring should face down ward and the outer ring should face upward. To ensure sufficient transmission torque, apply oil (machine oil acceptable) to the taper ring and tighten as indicated.

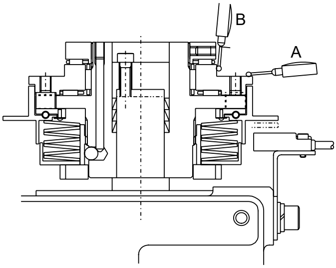

Tightening bolt	M4 Hexagon socket set screw	M5 Hexagon socket set screw	M4 Hexagon socket head cap screw	M5 Hexagon socket head cap screw	M6 Hexagon socket head cap screw	M8 Hexagon socket head cap screw
Tightening torque (N·m)	2.16	4.21	3.72	7.5	12.7	34.3

5 Tap depth of the drive plate (TSF)
When you install a table to the drive plate of a torque saver (TSF), check the tap depth indicated below.
If a bolt longer than the depth is used, internal components may become damaged and it may not release properly.

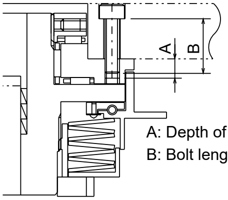

A: Depth of thread
B: Bolt length

Series	TSF2	TSF3	TSF4	TSF5	TSF6	TSF8	TSF11	TSF14	TSF18
Depth of thread	4-M4 depth 4	4-M4 depth 4	4-M5 depth 4.5	6-M6 depth 7	6-M6 depth 9	6-M8 depth 10	6-M10 depth 15	6-M12 depth 16	6-M16 depth 22

Installation & adjustment

⚠ CAUTION

6 Do not use the products in the environment where water or oil may be splashed over the unit. (no condensation) CKD products are not water-proof nor splash-proof. If water or oil is splashed, the torque saver may malfunction or become damaged. Provide countermeasures such as a cover.

7 Grease is applied to the torque saver. Grease may seep out while in use. Conduct periodic inspection and provide countermeasures such as an oil drip pan if this may cause a product defect.

8 Do not use the products in an environment where explosion or corrosion may occur.

9 Machining the dwell pin hole (TSF2 to 18)
When driving dwell pins to fix the table, observe dimensions indicated in the following table and figures.

Positioning pin hole dimensions

Symbol / Model No.	A	B	C	D
TSF2,3	4.0 or less	(5.0)	4	42
TSF4	4.5 or less	(5.5)	5	55
TSF5	7 or less	(8.0)	6	75
TSF6	9 or less	(10)	6	100
TSF8	10 or less	(11)	8	120
TSF11	14 or less	(16)	10	150
TSF14	16 or less	(18)	12	180
TSF18	18 or less	(24)	16	215

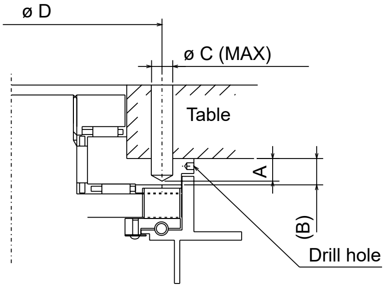

(Fig.8)

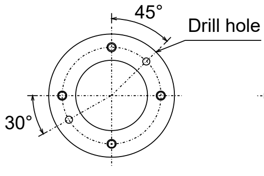

TSF2 to 4

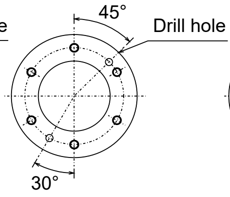

TSF5 to 8

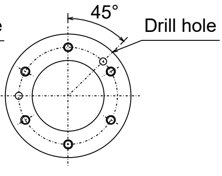

TSF11 to 18

Operation and maintenance

⚠ CAUTION

1 Lubrication with grease
Loosen the adjusting nut and apply grease to the rollers every 2,000 to 3,000 hours.
Note: Use lithium-based grease.

2 Do not maintenance or inspect the units while power is being supplied.
It may start moving suddenly due to an error or control circuit failure resulting in injury.

3 Be sure to make index drive start and stop within the dwell interval.
If the input shaft is started or stopped other than the dwell interval, load torque exceeding the design value may apply causing a torque saver to release resulting in the table to overrun, which may cause serious injury to person(s) or damage to the unit or surrounding equipment.

Option

● Torque saver (TSF2 to 18, TST6 to 11)

■ How to order (When ordering order without mounting a torque saver on index drives.)

(example)

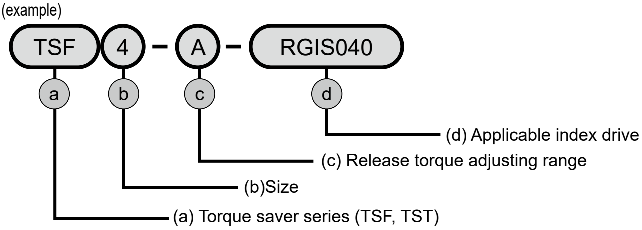

(d) For applicable index drive, refer to the table below.

● Standard
(Roller gear cam)

Main model No.		Torque saver
RGIS	**025**	TSF2
	032	TSF3
		TSF4
	040	TSF4
		TSF5
	050	TSF5
		TSF6
	063	TSF6
	080	TSF8
	110	TSF11
	140	TSF14
	180	TSF18

* The adjusting range of release torque of TSF4-*-RGIS032 is either C or D.

● Wide angle
(Roller gear cam)

Main model No.		Torque saver
RGIL	**063**	TSF4
		TSF5
	080	TSF5
	110	TSF6
	140	TSF8
	180	TSF11
	250	TSF14

● Standard
(Parallel cam)

Main model No.		Torque saver
PCIS	**040**	TSF4
	050	TSF5
	063	TSF5
		TSF6
	080	TSF6
	100	TSF8
	125	TSF11
	160	TSF14
	200	TSF18
	(250)	(TSF18)

Index in parentheses ( ) has the output shaft diameter different from standard.

● Table type
(Roller gear cam)

Main model No.		Torque saver
RGIT	**063**	TST6
	080	TST8
	110	TST11

(CAUTION)

- * When ordering only a torque saver, confirm the model number of index drive to be installed.
  Applicable index drive indicated on TSF name plate is unified with "RGIS***" by the shaft bore. Actual index drive to be installed may differ.
- * When ordering only a torque saver by itself, confirm the output shaft specification (the fixed shaft specification for TST) of the index to be mounted.
- * For the specification of index number n=12 or more, suitable release torque may not be adjusted when a torque saver is installed.
  Contact CKD when selecting select a model.

TSF positioning pin hole dimensions (custom order)

Size	TSF2	TSF3	TSF4
Pitch	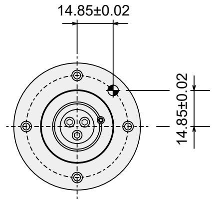	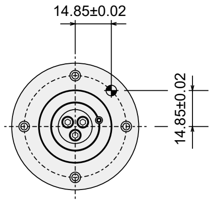	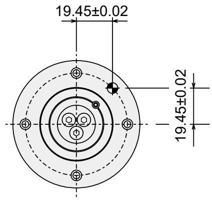
Standard bore	ø 4H7 depth 3 P.C.D.42	ø 4H7 depth 3 P.C.D.42	ø 5H7 depth 3 P.C.D.55

Size	TSF5	TSF6	TSF8
Pitch	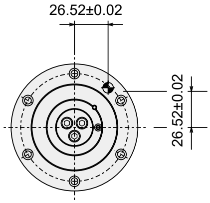	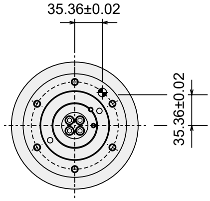	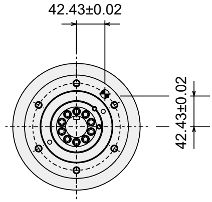
Standard bore	ø 6H7 depth 5 P.C.D.75	ø 6H7 depth 7 P.C.D.100	ø 8H7 depth 7 P.C.D.120

Size	TSF11	TSF14	TSF18
Pitch	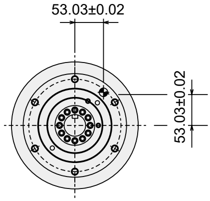	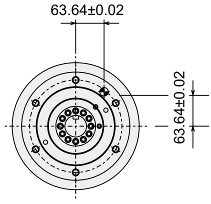	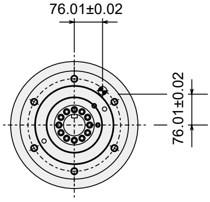
Standard bore	ø 10H7 depth 11 P.C.D.150	ø 12H7 depth 12 P.C.D.180	ø 16H7 depth 13 P.C.D.215

Option

● Torque saver (TSF)

TSF2

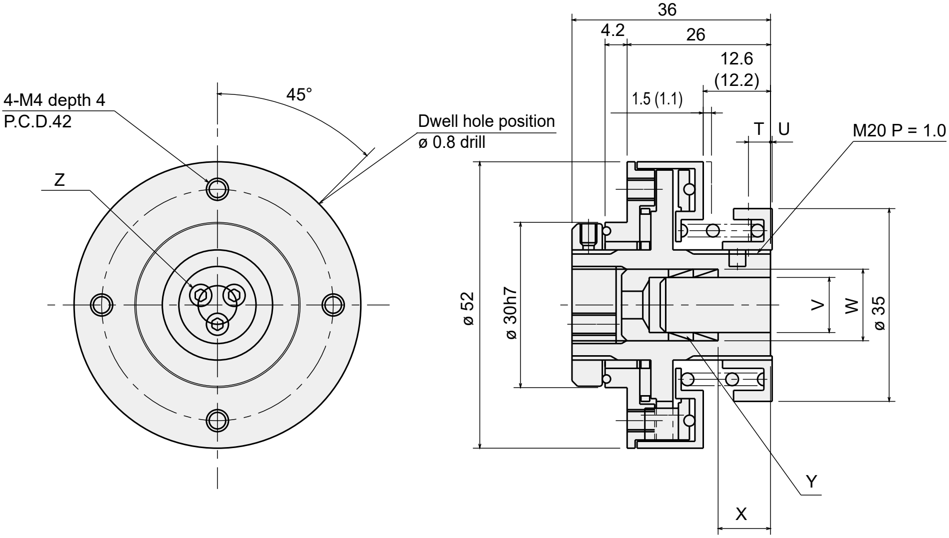

Note. Dimensions in parentheses ( ) are for models A and C.

Model No.		Release torque adjusting range (N·m)	Allowable thrust force (N)	Allowable radial force (N)	Allowable bending moment (N·m)	Moment of inertia (kg·m^2)	Weight (kg)	Change in torque per 1 rotation of adjusting nut (N·m)	T	U
TSF2	A	0.39 to 0.88	294	98.1	4.91	6.47×10^{-5}	0.24	0.26	3.5	0.5
	B	0.54 to 1.37						0.39	3.9	0.1
	C	1.18 to 3.43						0.98	3.5	0.5
	D	1.96 to 5.89						1.47	3.9	0.1

Applicable index drive	V	W	X	Y	Z	Shaft end installation hole
RG*S 025	$ø\ 10^{+0.02}_{0}$	ø 13H7	9.5	2-10 × 13 (S)	3-M4 Hexagon socket set screw	-

U : Protrusion of adjusting nut when torque is 0 N·m

T : Max. clamping

Contact CKD for information on accuracy.

TSF3

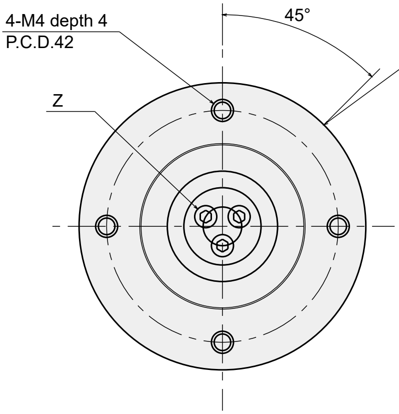

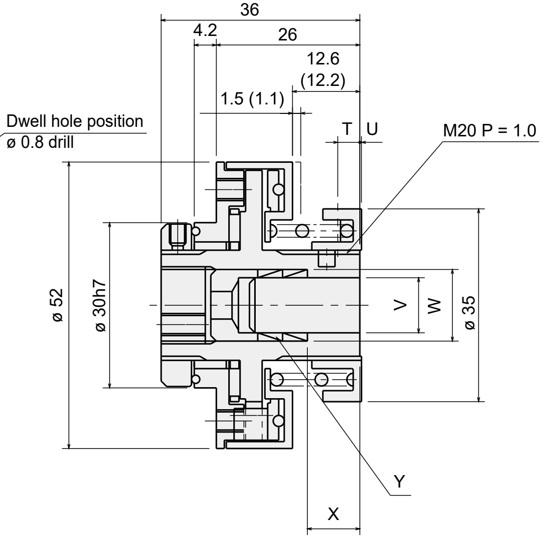

Note. Dimensions in parentheses ( ) are for models A and C.

Model No.	Release torque adjusting range (N·m)		Allowable thrust force (N)	Allowable radial force (N)	Allowable bending moment (N·m)	Moment of inertia ($kg \cdot m^2$)	Weight (kg)	Change in torque per 1 rotation of adjusting nut (N·m)	T	U
TSF3	A	0.39 to 0.88	294	98.1	4.91	6.47×10^{-5}	0.24	0.26	3.5	0.5
	B	0.54 to 1.37						0.39	3.9	0.1
	C	1.18 to 3.43						0.98	3.5	0.5
	D	1.96 to 5.89						1.47	3.9	0.1

Applicable index drive	V	W	X	Y	Z	Shaft end installation hole
RG*S 032	$ø\ 12^{+0.02}_{0}$	ø 15H7	9.5	2-12 × 15 (S)	3-M5 Hexagon socket set screw	-

U : Protrusion of adjusting nut when torque is 0 N·m

T : Max. clamping

Contact CKD for information on accuracy.

Option

● Torque saver (TSF)

TSF4

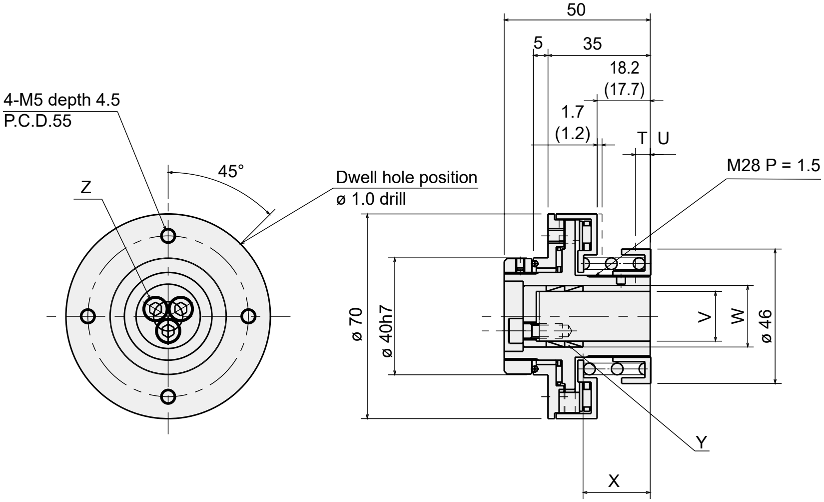

Note. Dimensions in parentheses ( ) are for models A and C.

Model No.	Release torque adjusting range (N·m)		Allowable thrust force (N)	Allowable radial force (N)	Allowable bending moment (N·m)	Moment of inertia (kg·m^2)	Weight (kg)	Change in torque per 1 rotation of adjusting nut (N·m)	T	U
TSF4	A	1.47 to 4.91	392	196	9.81	2.65×10^{-4}	0.56	1.47	5.3	0.7
	B	1.96 to 7.85						2.94	5.8	0.2
	C	2.94 to 12.8						3.24	5.3	0.7
	D	5.40 to 21.6						5.89	5.8	0.2

Applicable index drive	V	W	X	Y	Z	Shaft end installation hole
RG*S 032	ø $12^{+0.02}_{0}$	ø 15H7	9.5	2-12 × 15 (S)	3-M5 Hexagon socket set screw	-
RG*S 040	ø $17^{+0.02}_{0}$	ø 21H7	23	2-17 × 21 (S)	3-M5 Special hexagon socket head cap screw	3-M5 depth 10 (P.C.D.9)
RG*L 063	ø $17^{+0.02}_{0}$	ø 21H7	23	2-17 × 21 (S)	3-M5 Special hexagon socket head cap screw	3-M5 depth 10 (P.C.D.9)
PC*S 040	ø $14^{+0.02}_{0}$	ø 18H7	14	2-14 × 18 (S)	4-M4 Hexagon socket head cap screw	-

U : Protrusion of adjusting nut when torque is 0 N·m

T : Max. clamping

Contact CKD for information on accuracy.

---

* The adjusting range of release torque of TSF4-☐-RGIS032 is either C or D.

TSF5

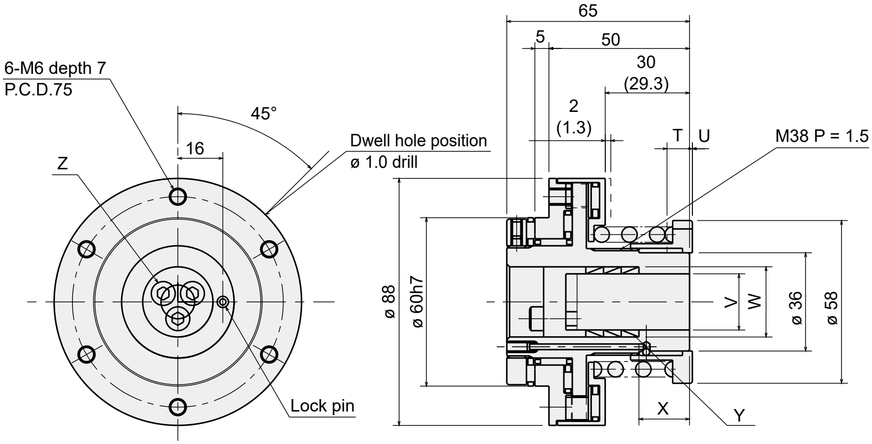

Note. Dimensions in parentheses ( ) are for models A and C.

Model No.	Release torque adjusting range (N·m)		Allowable thrust force (N)	Allowable radial force (N)	Allowable bending moment (N·m)	Moment of inertia (kg·m^2)	Weight (kg)	Change in torque per 1 rotation of adjusting nut (N·m)	T	U
TSF5	A	2.94 to 7.85	7850	3430	147	1.01 × 10^{-3}	1.34	1.18	10.3	1.7
	B	3.92 to 11.8						2.26	11.0	1.0
	C	9.81 to 29.4						4.91	9.3	2.7
	D	19.6 to 58.9						9.81	10.0	2.0

Applicable index drive	V	W	X	Y	Z	Shaft end installation hole
RG*S 040	ø 17$^{+0.02}_{0}$	ø 21H7	23	2-17 × 21 (S)	3-M5 Special hexagon socket head cap screw	3-M5 depth 10 (P.C.D.9)
RG*S 050	ø 20$^{+0.02}_{0}$	ø 25H7	18	3-20 × 25 (S)	3-M5 Hexagon socket head cap screw	3-M5 depth 12 (P.C.D.12)
RG*L 063	ø 17$^{+0.02}_{0}$	ø 21H7	23	2-17 × 21 (S)	3-M5 Hexagon socket head cap screw	3-M5 depth 10 (P.C.D.9)
RG*L 080	ø 20$^{+0.02}_{0}$	ø 25H7	18	3-20 × 25 (S)	3-M5 Hexagon socket head cap screw	3-M5 depth 12 (P.C.D.12)
PC*S 050	ø 16$^{+0.02}_{0}$	ø 20H7	18	2-16 × 20 (S)	3-M5 Hexagon socket head cap screw	-
PC*S 063	ø 20$^{+0.02}_{0}$	ø 25H7	18	3-20 × 25 (S)	3-M5 Hexagon socket head cap screw	3-M5 depth 12 (P.C.D.12)

U : Protrusion of adjusting nut when torque is 0 N·m

T : Max. clamping

Contact CKD for information on accuracy.

Option

● Torque saver (TSF)

CAD

TSF6

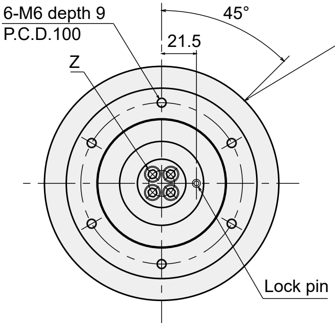

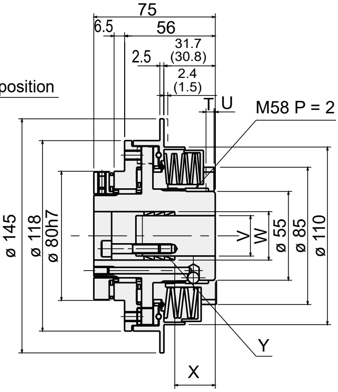

Note. Dimensions in parentheses ( ) are for models A and C.

Model No.	Release torque adjusting range (N·m)		Allowable thrust force (N)	Allowable radial force (N)	Allowable bending moment (N·m)	Moment of inertia (kg·m^2)	Weight (kg)	Change in torque per 1 rotation of adjusting nut (N·m)	T	U
TSF6	A	9.81 to 29.4	9810	6870	196	5.47 × 10^{-3}	3.7	14.7	5.4	1.6
	B	19.6 to 58.9						26.5	6.3	0.7
	C	39.2 to 118						39.2	5.8	0.2
	D	58.9 to 177						70.6	6.7	-0.7

Applicable index drive	V	W	X	Y	Z	Shaft end installation hole
RG*S 050	ø 20$^{+0.02}_{0}$	ø 25H7	18	3-20 × 25 (S)	3-M5 Hexagon socket set screw	3-M5 depth 12 (P.C.D.12)
RG*S 063	ø 25H6	ø 30H7	25	3-25 × 30 (S)	4-M6 Hexagon socket set screw	4-M6 depth 18 (P.C.D.16)
RG*L 110	ø 25H6	ø 30H7	25	3-25 × 30 (S)	4-M6 Hexagon socket set screw	4-M6 depth 18 (P.C.D.16)
PC*S 063	ø 20$^{+0.02}_{0}$	ø 25H7	18	3-20 × 25 (S)	3-M5 Hexagon socket set screw	3-M5 depth 12 (P.C.D.12)
PC*S 080	ø 25H6	ø 30H7	25	3-25 × 30 (S)	4-M6 Hexagon socket set screw	4-M6 depth 18 (P.C.D.16)

U : Protrusion of adjusting nut when torque is 0 N·m

T : Max. clamping

Contact CKD for information on accuracy.

TSF8

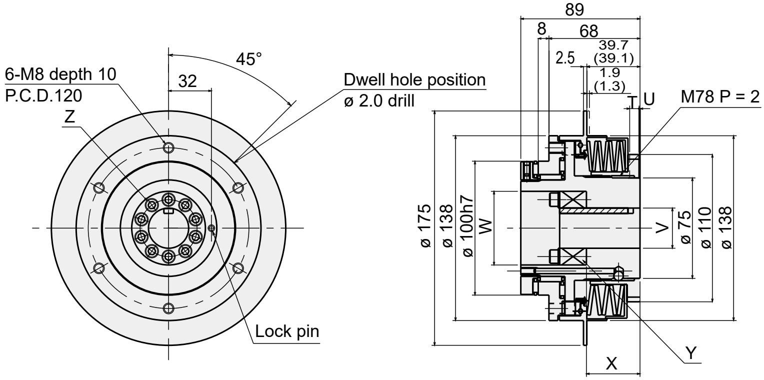

Note. Dimensions in parentheses ( ) are for models A and C.

Model No.	Release torque adjusting range (N·m)		Allowable thrust force (N)	Allowable radial force (N)	Allowable bending moment (N·m)	Moment of inertia ($kg \cdot m^2$)	Weight (kg)	Change in torque per 1 rotation of adjusting nut (N·m)	T	U
TSF8	A	29.4 to 88.3	14700	9810	392	1.42×10^{-2}	6.6	19.6	9.9	0.6
	B	49.1 to 147						37.3	10.5	0
	C	88.3 to 294						74.6	10.1	-0.1
	D	147 to 441						98.1	10.7	-0.7

Applicable index drive	V	W	X	Y	Z	Shaft end installation hole
RG*S 080	ø 30H6	ø 55H7	40	1-30 × 55	10-M6 Hexagon socket head cap screw	-
RG*L 140	ø 30H6	ø 55H7	40	1-30 × 55	10-M6 Hexagon socket head cap screw	-
PC*S 100	ø 30H6	ø 55H7	40	1-30 × 55	10-M6 Hexagon socket head cap screw	-

U : Protrusion of adjusting nut when torque is 0 N·m

T : Max. clamping

Contact CKD for information on accuracy.

Option

● Torque saver (TSF)

CAD

TSF11

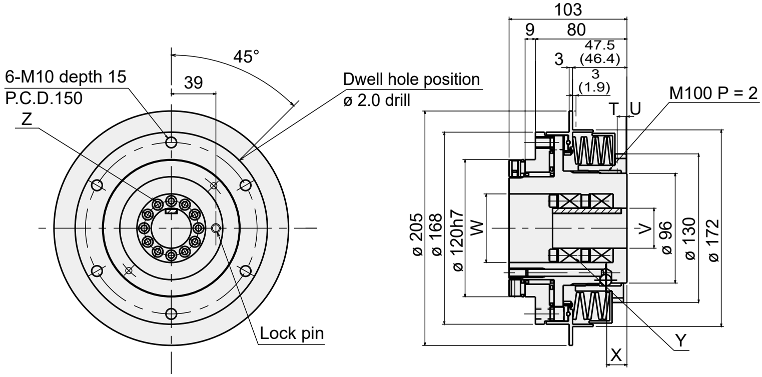

Note. Dimensions in parentheses ( ) are for models A and C.

Model No.		Release torque adjusting range (N·m)	Allowable thrust force (N)	Allowable radial force (N)	Allowable bending moment (N·m)	Moment of inertia $(kg\cdot m^2)$	Weight (kg)	Change in torque per 1 rotation of adjusting nut (N·m)	T	U
TSF11	A	68.7 to 196	21600	14700	687	3.74×10^{-2}	11.8	19.6	13.4	0.6
	B	88.3 to 294						108	14.5	-0.5
	C	216 to 589						128	11.9	-1.9
	D	294 to 1180						275	13.0	-3.0

Applicable index drive	V	W	X	Y	Z	Shaft end installation hole
RG*S 110	ø 35H6	ø 60H7	40 16.5	1-35 × 60 2- 〃	12-M6 Hexagon socket head cap screw	-
RG*L 180	ø 35H6	ø 60H7	40 16.5	1-35 × 60 2- 〃	12-M6 Hexagon socket head cap screw	-
PC*S 125	ø 35H6	ø 60H7	40 16.5	1-35 × 60 2- 〃	12-M6 Hexagon socket head cap screw	-

* The figures under X and Y in the above table indicate dimensions for the release torque of D.

U : Protrusion of adjusting nut when torque is 0 N·m

T : Max. clamping

Contact CKD for information on accuracy.

TSF14

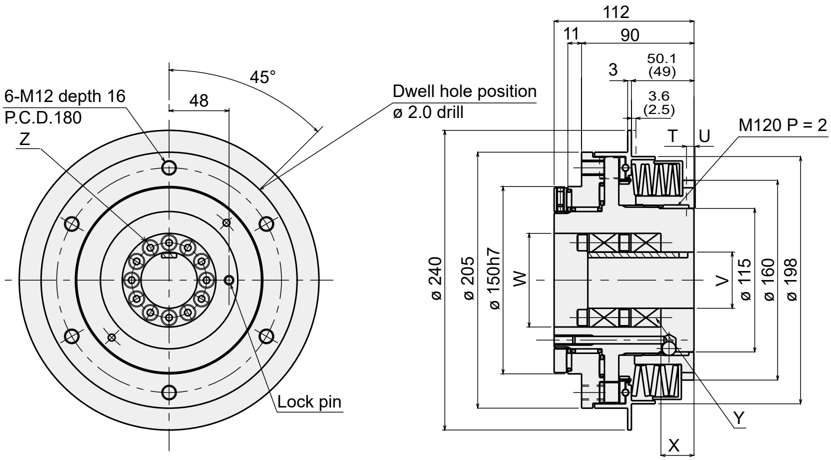

Note. Dimensions in parentheses ( ) are for models A and C.

Model No.	Release torque adjusting range (N·m)		Allowable thrust force (N)	Allowable radial force (N)	Allowable bending moment (N·m)	Moment of inertia $(kg \cdot m^2)$	Weight (kg)	Change in torque per 1 rotation of adjusting nut (N·m)	T	U
TSF14	A	98.1 to 294	28400	23500	981	9.10×10^{-2}	19.8	98.1	12.0	2.0
	B	147 to 441						147	13.1	0.9
	C	392 to 1180						265	11.5	1.0
	D	589 to 1860						451	12.6	-0.1

Applicable index drive	V	W	X	Y	Z	Shaft end installation hole
RG*S 140	ø 45H6	ø 75H7	60 26.5	1-45 × 75 2- 〃	12-M8 Hexagon socket head cap screw	-
RG*L 250	ø 45H6	ø 75H7	60 26.5	1-45 × 75 2- 〃	12-M8 Hexagon socket head cap screw	-
PC*S 160	ø 45H6	ø 75H7	60 26.5	1-45 × 75 2- 〃	12-M8 Hexagon socket head cap screw	-

* The figures under X and Y in the above table indicate dimensions for release torque of D.

U : Protrusion of adjusting nut when torque is 0 N·m

T : Max. clamping

Contact CKD for information on accuracy.

Option

● Torque saver (TSF)

TSF18

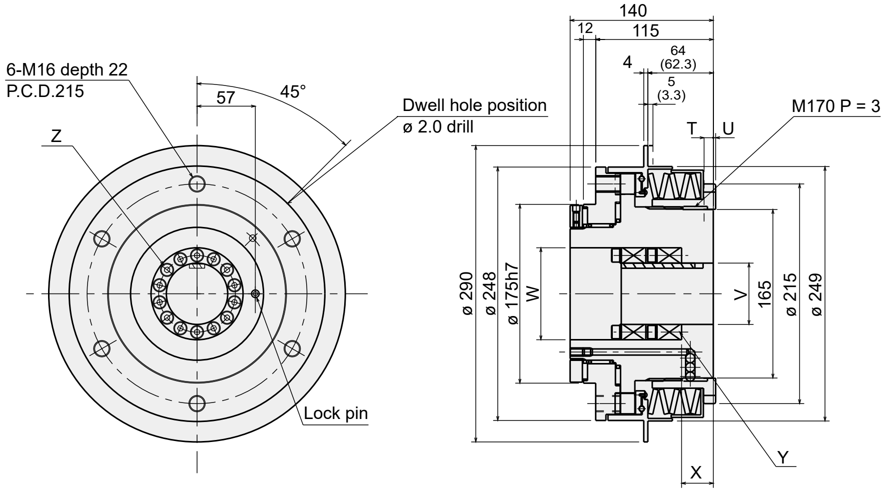

Note. Dimensions in parentheses ( ) are for models A and C.

Model No.	Release torque adjusting range (N·m)		Allowable thrust force (N)	Allowable radial force (N)	Allowable bending moment (N·m)	Moment of inertia (kg·m^2)	Weight (kg)	Change in torque per 1 rotation of adjusting nut (N·m)	T	U
TSF18	A	294 to 1180	34300	30400	1470	0.282	39.1	392	13.5	4.0
	B	687 to 1770						814	15.2	2.3
	C	1180 to 2940						1040	15.8	4.2
	D	1960 to 4910						2940	17.5	2.5

Applicable index drive	V	W	X	Y	Z	Shaft end installation hole
RG*S 180	ø 60H6	ø 90H7	64.5 31	1-60 × 90 2- 〃	14-M8 Hexagon socket head cap screw	-
PC*S 200 (PC*S 250)	ø 60H6	ø 90H7	64.5 31	1-60 × 90 2- 〃	14-M8 Hexagon socket head cap screw	-

* The figures under X and Y in the above table indicate dimensions for the release torque of C and D.

U : Protrusion of adjusting nut when torque is 0 N·m

T : Max. clamping

Contact CKD for information on accuracy.

Option

● Torque saver (TST)

■ TST positioning pin hole dimensions (custom order)

Size	**TST6**	**TST8**	**TST11**
Pitch	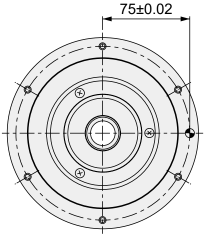	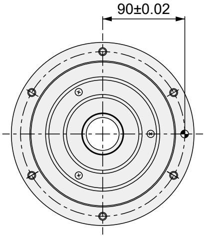	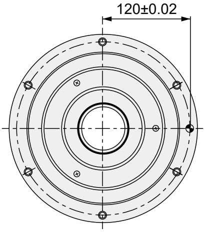
Standard bore	ø 8H7 diameter Effective penetration 10 P.C.D.150	ø 8H7 diameter Effective penetration 13 P.C.D.180	ø 10H7 diameter Effective penetration 16 P.C.D.240

Dimensions

TST6

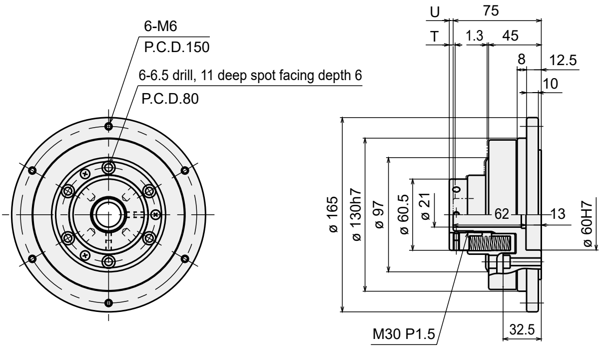

Characteristics

Model No.	Release torque adjusting range (N·m)		Allowable thrust force (N)	Allowable radial force (N)	Allowable bending moment (N·m)	Moment of inertia ($kg \cdot m^2$)	Weight (kg)	Change in torque per 1 rotation of adjusting nut (N·m)	T	U
TST6	A	12 to 60	3600	1400	73	0.014	5.6	16.5	5.5	3.5
	B	40 to 130						45.9	4.2	3.5

T : Max. clamping of adjusting nut

U : Dimension when the spring clamping is zero

Contact CKD for information on accuracy.

Option

● Torque saver (TST)

CAD

Dimensions

● TST8

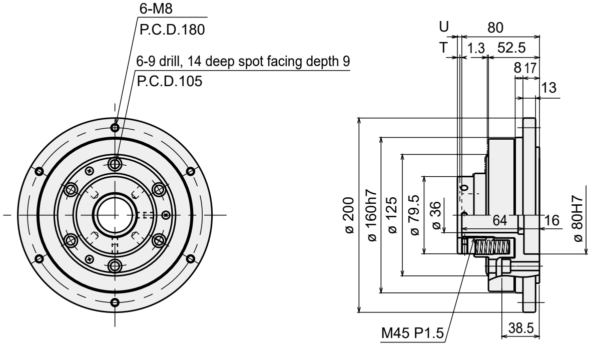

Characteristics

Model No.	Release torque adjusting range (N·m)		Allowable thrust force (N)	Allowable radial force (N)	Allowable bending moment (N·m)	Moment of inertia $(kg \cdot m^2)$	Weight (kg)	Change in torque per 1 rotation of adjusting nut (N·m)	T	U
TST8	A	30 to 90	5000	2000	130	0.037	9.0	36.2	3.7	4.5
	B	80 to 300						102.0	4.4	4.5

T : Max. clamping of adjusting nut

U : Dimension when the spring clamping is zero

Contact CKD for information on accuracy.

Dimensions

TST11

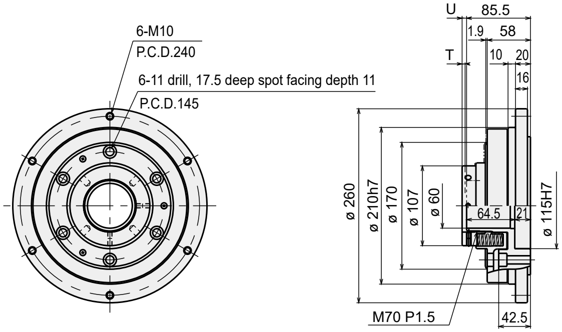

Characteristics

Model No.	Release torque adjusting range (N·m)		Allowable thrust force (N)	Allowable radial force (N)	Allowable bending moment (N·m)	Moment of inertia $(kg \cdot m^2)$	Weight (kg)	Change in torque per 1 rotation of adjusting nut (N·m)	T	U
TST11	A	100 to 350	9500	3800	330	0.123	16.6	88.5	5.9	6.0
	B	250 to 600						270.0	3.3	6.0

T : Max. clamping of adjusting nut

U : Dimension when the spring clamping is zero

Contact CKD for information on accuracy.

Option

● Torque guard (TGX)

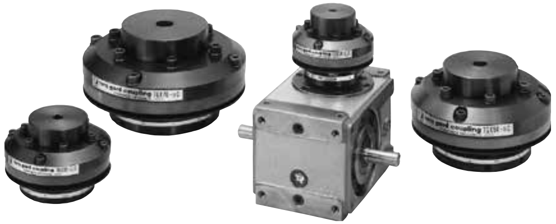

Features

1. Coupling function
   The ball & wedge mechanism absorbs misalignment including angular error, parallel error and axial direction displacement.
2. High return accuracy of ±10 seconds.
   When returning after the trip, the phase difference between the drive side and load side is small.
3. High accuracy trip (release)
   The differences of adjacent trip torque values for repetitive trips (releases) are within 3%.
4. Easy torque adjustment
   Trip torque can be easily adjusted by turning the adjusting nut.
5. Checking the set torque
   The set torque can be easily checked with an easy-to-read rpm scale and angle scale.
6. Single position
   The unique layout of the ball & wedge mechanism allows matching array only at 1 position.
7. Overload detection is available (combined with a proximity switch)

■ Motion overview

Ball & wedge mechanism

Torque is transmitted via the (1) hub (9) steel ball (2) center flange (5) flange and to the (6) boss.
The (9) steel ball is pressed against the (1) hub and the (2) center flange with the force of (10) coil spring. The contact area of the (3) plate is tapered so that the (9) steel ball is always pressed against the (1) hub and the groove of the (2) center flange. This is the ball & wedge mechanism. (Figures 1 and 2)
When overload is applied, the (9) ball moves out of the pocket and starts rolling. Since there is no sliding surface, the frictional torque is extremely small enhancing the durability. When this happens, the (3) plate is pushed down, which can be detected with a proximity switch.When the table is manually turned after removing the overload, it automatically returns to the original position.

Fig. 1

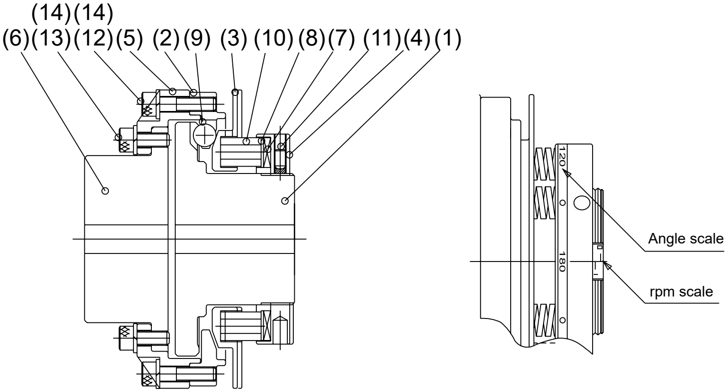

(1)	Hub	(6)	Boss	(11)	Lock screw
(2)	Center flange	(7)	Bearing	(12)	Hexagon socket head cap screw
(3)	Plate	(8)	Side plate	(13)	Hexagon socket head cap screw
(4)	Adjusting nut	(9)	Steel ball	(14)	Spring washer
(5)	Flange	(10)	Coil spring		

Fig. 2

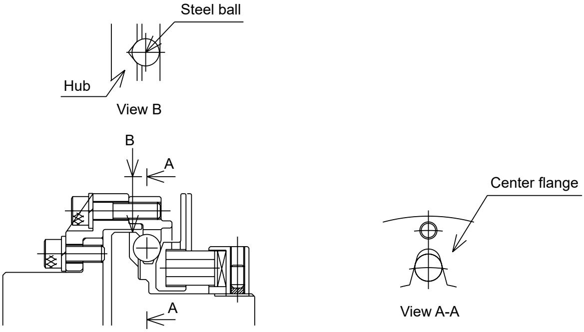

Option

● Torque guard (TGX)

⚠ CAUTION When designing or making a selection

1. Confirm that the actual load torque of index drive Te x 1.3 is within the trip torque (release torque) adjusting range.
2. If an external load exists while index drive is stopped (in a dwell interval), confirm that this is less than the trip torque (release torque).
3. When index drive is stopped for emergency during output motion, take time to stop the system so that the torque guard does not trip.
4. If backlash exists in the driving system or if rigidity is not sufficient, a load exceeding the calculation may apply. Select the optimum index drive and adjust the trip torque of a torque guard, taking the load characteristics well into consideration.
5. When you select index drive, calculate the load conditions taking into consideration the moment of inertia of a torque guard itself as well as the table to be installed, the workpiece, etc.
6. When ordering only a set of index drive and a torque guard, they can be delivered assembled with special specifications for mounting the output shaft depending on the size.
   When you place an order only for the torque guard, note the output shaft specification of index drive to be mounted.
7. When you install a torque guard exceeding the specification of the index number n of 12 of index drive, you may not be able to make a proper trip torque adjustment. Contact CKD when you select a model.
8. Frictional torque from the bearings and seals and work torque caused by uneven mounting of the workpiece and jigs affect the accuracy of a torque guard. Take measures to minimize these when you design the system.

⚠ CAUTION Installation & adjustment

■ Adjusting trip torque

How to adjust trip torque

1. Calculate the actual load torque Te of index drive.
2. Calculate the trip torque Taj. (generally, Taj = Te × 1.3)
3. Torque for the torque guard is adjusted to be at min. point (min. torque) at shipment unless specified. Confirm the indicator points zero on a torque scale.
4. Take out one of the lock screws stopping the adjustment nut rotation. (When the index drive is shipped assembled)
5. Read the tightening angle from the diagram of the clamping and torque correlation chart (right table) for the preset trip torque, and tighten the adjusting nut based on this angle. One increment of the Adjusting nut rotational angle scale is 60 degrees.
   First, as factory settings is at the lowest increment (0°), perform a trip test at this setting. If necessary, tighten accordingly and test again. Repeat these steps until you reach the optimum trip torque.
   The trip torque of the product many not exactly match the value in the diagram of the relationship of the trip torque and adjusting nut rotation (on the right) as this is just a reference value.
6. Tighten 1 lock screw up to the following torque. [CAUTION 1]
   There are 2 locations for the lock screw to tighten. If the position is at the hub notch, use the other position. If you suspect the lock nut may become loose due to vibration while running, apply Loctite 242 or a similar product to prevent loosening.

[CAUTION] When you re-tighten the lock screw, check the following 2 points.

(1) Ensure that the plug of the tip is not displaced.
If you use the lock screw whose plug is displaced, the thread of the hub may be damaged or the screw may bite into the notch of the hub.

(2) Ensure that the plug of the tip is not significantly deformed.
If you use the lock screw whose plug is deformed, the thread of the hub may be damaged.

* In the above cases of (1) or (2), or if you suspect this may happen, use a new lock screw.

[CAUTION]

(1) The trip torque is set at min. within the adjusting range for delivery unless specified specified otherwise. Adjust the trip torque when installed on the unit.

(2) After adjustment of the trip torque, confirm that it is correctly adjusted using a torque gauge.

(3) Do not turn the adjusting nut exceeding the max. on the torque torque scale.

Clamping and torque correlation chart

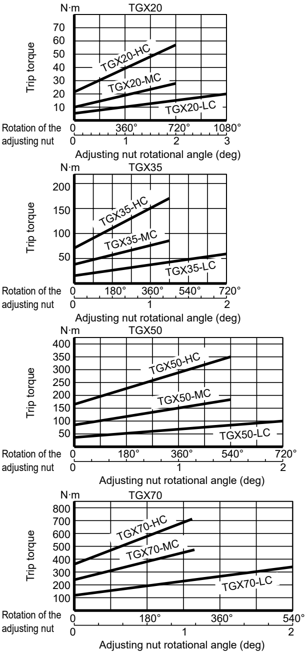

Tightening torque

Lock screw	Tightening torque
M5	3.8 Nm
M8	16 Nm

CAUTION Installation & adjustment

Installation

1. Be sure to securely fix the torque guard and the table.
2. When the trip detection switch is installed
   The distance of detection of the proximity switch may vary depending on temperature and voltage. Confirm that the torque guard trip is correctly detected after installation.
3. When you install a torque guard onto the shaft, surface runout of the torque guard may increase if you forcibly pound it with a hammer.
4. When you install the torque guard to the shaft, be sure to check the alignment including concentricity.
   Installation should be within the allowable misalignment. (Tables 2 & 3, Figures 3 & 4)
5. Do not use the products in an environment where water or oil may be splashed over the unit. CKD products are not waterproof nor splash-proof. If water or oil is splashed, the torque saver may malfunction or become damaged.
   Provide countermeasures such as a cover if water or oil may be splashed.
6. Grease is applied to the torque saver. Oil may seep out while being used. Conduct periodic inspection and provide countermeasures such as an oil drip pan if this may cause a product defect.
7. Do not use this product in an environment where explosion or fire may occur.

Aligning method 1

a. Disassemble the flange from the boss and the center flange and slide it in the axial direction.
b. Fix the dial around the boss, and measure the runout at the side surface and circumference of the hub.

Aligning method 2

a. Disassemble the flange and the center flange.
b. Slide the boss with the flange in the axial direction.
c. Secure the dial on the shaft, and measure the runout at the side surface and circumference of the hub.

(Table 2)

Model No.	Allowable angle deviation deg	Allowable parallel deviation mm	Axial tolerance displacement mm
TGX20-C	0.6	0.1	±0.5
TGX35-C	0.6	0.1	±0.5
TGX50-C	0.6	0.1	±0.6
TGX70-C	0.6	0.1	±0.7

(Table 3)
Reference: Hub side runout per angular error of $\theta = 0.1°$

Model No.	O.D.	Runout of the hub mm
TGX20-C	ø 75	0.131
TGX35-C	ø 98	0.171
TGX50-C	ø 138	0.241
TGX70-C	ø 177	0.309

* Mount the unit so that the angular error can be minimized.

(Fig. 3)

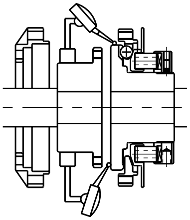

(Fig.4)

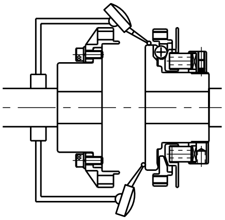

CAUTION During use & maintenance

1. Lubrication with grease
   Apply a thin coat of grease to the ball and bearing section once every year or once every 1,000 trips.
2. Do not service or inspect the units while power is being supplied.
   It may suddenly run due to an error or control circuit failure resulting in injury.
3. Be sure to make index drive start and stop within the dwell interval.
   If the input shaft is started or stopped outside the dwell interval, load torque exceeding the design value may be applied causing the torque guard to release resulting in the table to overrun, which may cause serious injury to person(s) or damage to the unit or surrounding equipment.

Option

● Torque guard (TGX)

■ How to display the model numbers (When you place an order without mounting a torque guard on the index drive)

(Example)

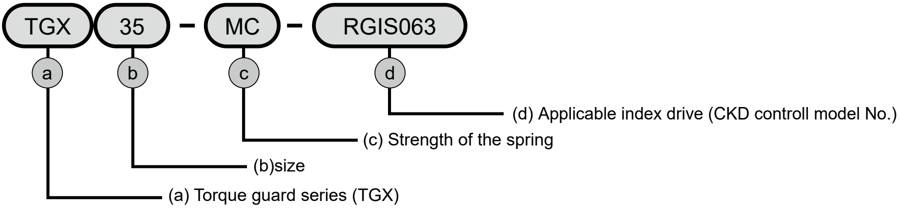

Note. When ordering only for a torque guard, check the output shaft specification of index drive on which it is to be mounted.
(d) For an applicable index drive, refer to the table below.

● Standard
(Roller gear cam)

Main model No.		Torque guard
RGIS	**040**	TGX20
	050	TGX20
	063	TGX35
	080	TGX50
	110	TGX70

● Standard
(Parallel cam)

Main model No.		Torque guard
PCIS	**050**	TGX20
	063	TGX20
	080	TGX35
	100	TGX50
	125	TGX70

● Wide angle
(Roller gear cam)

Main model No.		Torque guard
RGIL	**063**	TGX20
	080	TGX20
	110	TGX35
	140	TGX50
	180	TGX70

(CAUTION)
The applicable index drive is not indicated on the name plate. When ordering a torque guard, confirm the model number of index drive to be installed.

Dimensions

● TGX20

Return accuracy	±10 sec
Variations of adjacent trip torque	±3%

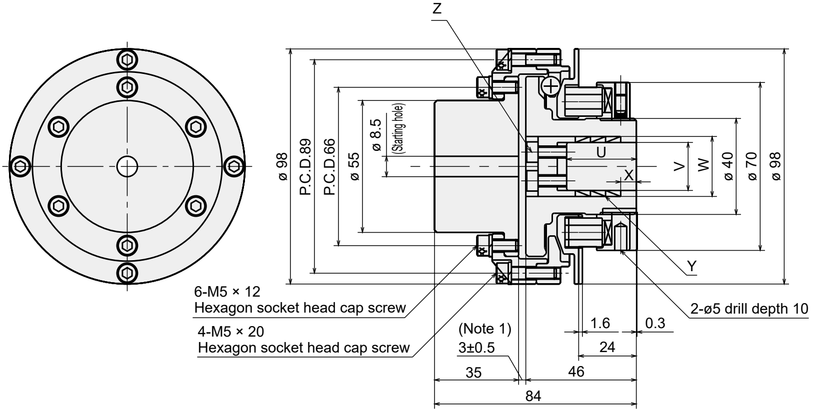

Note 1: Mount onto the equipment within the dimensions specified.

Characteristics

Torque guard coupling Model No.	Set torque range (N·m)	Max. rotation speed (rpm)	Color of coil spring x quantity	Torque guard (boss)		Weight (kg)	Moment of inertia × 10^{-2} (kg·m^2)	Allowable angle deviation (deg)	Allowable parallel deviation (mm)	Axial tolerance displacement (mm)
				Tap hole diameter	Max. hole diameter					
TGX20-LC	5.2 to 19	550	Yellow × 6	8.5	35	2.38	0.231	0.6	0.1	±0.5
TGX20-MC	9.8 to 27		Red × 3							
TGX20-HC	21 to 55		Red × 6							

Applicable index drive	U	V	W	X	Y	Z	Shaft end installation hole
RG*S040	33	ø 17H7	ø 21H7	18	2-17 × 21 (S)	3-M5 special hexagon socket head cap screw	2-M6 depth 9 (P.C.D.9)
RG*S050	29	ø 20H7	ø 25H7	6.5	3-20 × 25 (S)	3-M5 hexagon socket head cap screw	3-M5 depth 10 (P.C.D.12)
RG*L063	33	ø 17H7	ø 21H7	18	2-17 × 21 (S)	3-M5 special hexagon socket head cap screw	2-M6 depth 9 (P.C.D.9)
RG*L080	29	ø 20H7	ø 25H7	6.5	3-20 × 25 (S)	3-M5 hexagon socket head cap screw	3-M5 depth 10 (P.C.D.12)
PC*S050	32	ø 16H7	ø 20H7	18	2-16 × 20 (S)	3-M5 special hexagon socket head cap screw	2-M6 depth 9 (P.C.D.9)
PC*S063	29	ø 20H7	ø 25H7	6.5	3-20 × 25 (S)	3-M5 hexagon socket head cap screw	3-M5 depth 10 (P.C.D.12)

Option

● Torque guard (TGX)

CAD

Dimensions

● TGX35

Return accuracy	±10 sec
Variations of adjacent trip torque	±3%

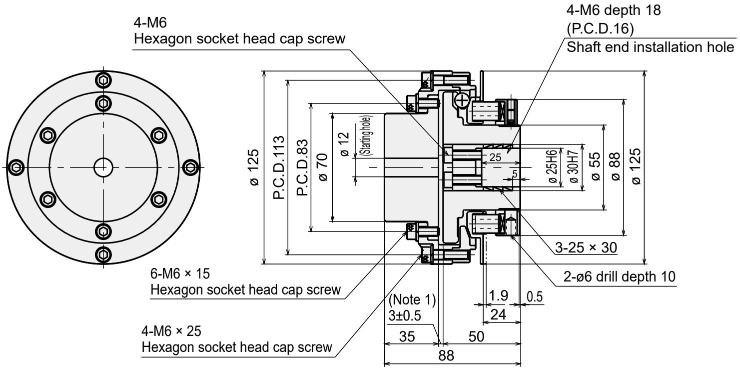

Note 1: Mount onto the equipment within the dimensions specified.

Characteristics

Torque guard coupling Model No.	Set torque range (N·m)	Max. rotation speed (rpm)	Color of coil spring x quantity	Torque guard (boss)		Weight (kg)	Moment of inertia × 10^{-2} (kg·m^2)	Allowable angle deviation (deg)	Allowable parallel deviation (mm)	Axial tolerance displacement (mm)
				Starting hole diameter	Max. hole diameter					
TGX35-LC	19 to 57	400	Red × 5	12	50	3.92	0.663	0.6	0.1	±0.5
TGX35-MC	36 to 84		Green × 5							
TGX35-HC	74 to 167		Green × 10							

Applicable index drive		
RG*S063	RG*L110	PC*S080

Return accuracy	±10 sec
Variations of adjacent trip torque	±3%

Dimensions

TGX50

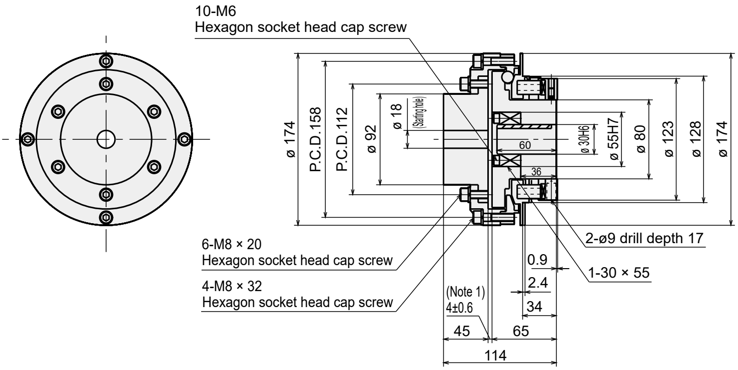

Note 1: Mount onto the equipment within the dimensions specified.

Characteristics

Torque guard coupling Model No.	Set torque range (N·m)	Max. rotation speed (rpm)	Color of coil spring x quantity	Torque guard (boss)		Weight (kg)	Moment of inertia × 10^{-2} (kg·m^2)	Allowable angle deviation (deg)	Allowable parallel deviation (mm)	Axial tolerance displacement (mm)
				Starting hole diameter	Max. hole diameter					
TGX50-LC	40 to 98	300	Red × 5	18	60	10.9	3.35	0.6	0.1	±0.6
TGX50-MC	81 to 176		Green × 5							
TGX50-HC	167 to 343		Green × 10							

Applicable index drive		
RG*S080	RG*L140	PC*S100

Option

● Torque guard (TGX)

Dimensions

● TGX70

Return accuracy	±10 sec
Variations of adjacent trip torque	±3%

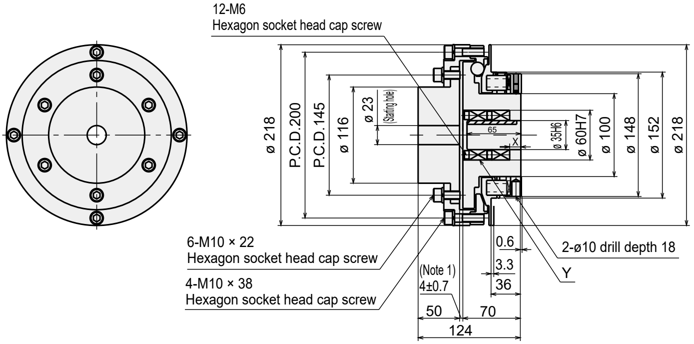

Note 1: Mount onto the equipment within the dimensions specified.

Characteristics

Torque guard coupling Model No.	Set torque range (N·m)	Max. rotation speed (rpm)	Color of coil spring x quantity	Torque guard (boss)		Weight (kg)	Moment of inertia × 10^{-2} (kg·m^2)	Allowable angle deviation (deg)	Allowable parallel deviation (mm)	Axial tolerance displacement (mm)
				Starting hole diameter	Max. hole diameter					
TGX70-LC	118 to 323	240	Red × 8	23	80	16.3	8.93	0.6	0.1	±0.7
TGX70-MC	235 to 461		Green × 8							
TGX70-HC	353 to 696		Green × 12							

Applicable index drive		X	Y
RG*S110	TGX70-LC/MC	41	1-35 × 60
	TGX70-HC	13.5	2-35 × 60
RG*L180	TGX70-LC/MC	41	1-35 × 60
	TGX70-HC	13.5	2-35 × 60
PC*S125	TGX70-LC/MC	41	1-35 × 60
	TGX70-HC	13.5	2-35 × 60

● MEMO

Option

● Hollow shaft geared motor

■ Features

1. Environment
   By eliminating the clutch/brake and adopting an inverter for starting/stopping, consumable parts are eliminated.
   Power consumption is reduced with the improved efficiency of the motor reducer mechanism.
2. Maintenance free
   With an inverter adopted for starting/stopping, maintenance of the clutch/brake parts becomes unnecessary.
3. Low cost
   The hollow shaft geared motor with excellent cost performance achieves a low cost system.
4. Mechatronics design
   We suggest a unit with an integrated drive system compatible with a DD motor.

Design & Selection

⚠ CAUTION

1. The input shaft torque of index drive should be less than the allowable output shaft torque of the geared motor.
2. Ensure that the total brake time required for both should be within the dwell interval of index drive when the inverter starts/stops index drive.
3. The capacity of the inverter should be greater than the capacity of the geared motor.
4. When you select an inverter, check the specifications of the motor and design the system.
   Depending on the inverter drive, the catalog characteristics of the motor manufacturer may not be satisfied.
   This may disqualify the explosion proof certification.(This is limited to customized specifications.)
5. When you install a detection switch, check the response time of the detection switch.
   If the input shaft speed is fast, the detection switch may not be able to detect it.

Mounting, installation and adjustment

⚠ CAUTION

1. Never leave combustible materials around the geared motor. Fire may occur.
2. Do not leave obstacles which may prevent ventilation around the geared motor.
   Burning due to overheating or fire may occur.
3. Operate the inverter within the specified frequency. Otherwise, the inverter may be damaged.
4. When work torque such as eccentric load is applied, the input shaft or the geared motor may run faster than the set speed tripping the inverter with regenerated power depending on the installation position of index drive.
   Provide a safety unit on the machine. The workpiece or table may drop.

Operation and maintenance

⚠ CAUTION

1. Replace lubricating oil of the geared motor regularly.

(1) Hypoid gear
Grease is used for lubrication, and no maintenance is required in general.

(2) Helical worm gear
Replace every 10,000 hours or every 2 years of operation whichever comes first. Be sure to use the specified lubricating oil.
[lubricating oil (brand name): Showa Shell Sekiyu Omala 680]

Roller gear cam drive Standard/Table type

Characteristics table

[series : RGIS050,RGIT063]

Motor model No. [Nissei]	Output (kW)	Actual reduction ratio (ir)	Output shaft rotational speed Nrs (rpm)		Output shaft allowable torque Trr (N·m)		Moment of inertia of the motor Jm (kg·m²)	Weight (kg)
			50Hz	60Hz	50Hz	60Hz		
F3S20N20-MM01TNNTNX	0.1	20	75	90	11	8.6	4.8×10^{-4}	6.5
F3S20N25-MM01TNNTNX		25	60	72	13	11		
F3S20N30-MM01TNNTNX		30	50	60	16	13		
F3S20N40-MM01TNNTNX		40	37.5	45	21	18		
F3S20N50-MM01TNNTNX		50	30	36	25	22		
F3S20N60-MM01TNNTNX		60	25	30	31	25		
F3S25N10-MM02TNNTNX	0.2	10	150	180	11	9.2	5.3×10^{-4}	8.5
F3S25N15-MM02TNNTNX		15	100	120	17	14		
F3S25N20-MM02TNNTNX		20	75	90	23	19		
F3S25N25-MM02TNNTNX		25	60	72	27	24		
F3S25N30-MM02TNNTNX		30	50	60	33	27		
F3S25N40-MM02TNNTNX		40	37.5	45	44	37		
F3S25N50-MM02TNNTNX		50	30	36	55	46		
F3S25N60-MM02TNNTNX		60	25	30	67	55		

[series : RGIS063,RGIT080]

Motor model No. [Nissei]	Output (kW)	Actual reduction ratio (ir)	Output shaft rotational speed Nrs (rpm)		Output shaft allowable torque Trr (N·m)		Moment of inertia of the motor Jm (kg·m²)	Weight (kg)
			50Hz	60Hz	50Hz	60Hz		
F3S25N20-MM02TNNTNX	0.2	20	75	90	23	19	5.3×10^{-4}	8.5
F3S25N25-MM02TNNTNX		25	60	72	27	24		
F3S25N30-MM02TNNTNX		30	50	60	33	27		
F3S25N40-MM02TNNTNX		40	37.5	45	44	37		
F3S25N50-MM02TNNTNX		50	30	36	55	46		
F3S25N60-MM02TNNTNX		60	25	30	67	55		
F3S30N10-MM04TNNTNX	0.4	10	150	180	23	19	1.1×10^{-3}	11.5
F3S30N15-MM04TNNTNX		15	100	120	33	27		
F3S30N20-MM04TNNTNX		20	75	90	44	37		
F3S30N25-MM04TNNTNX		25	60	72	55	46		
F3S30N30-MM04TNNTNX		30	50	60	67	55		
F3S30N40-MM04TNNTNX		40	37.5	45	88	74		
F3S30N50-MM04TNNTNX		50	30	36	111	92		
F3S30N60-MM04TNNTNX		60	25	30	133	111		

[series : RGIS080,RGIT110]

Motor model No. [Tsubaki Emerson]	Output (kW)	Actual reduction ratio (ir)	Output shaft rotational speed Nrs (rpm)		Output shaft allowable torque Trr (N·m)		Moment of inertia of the motor Jm (kg·m²)	Weight (kg)
			50Hz	60Hz	50Hz	60Hz		
F3S30N20-MM04TNNTNX	0.4	20	75	90	44	37	1.1×10^{-3}	11.5
F3S30N25-MM04TNNTNX		25	60	72	55	46		
F3S30N30-MM04TNNTNX		30	50	60	67	55		
F3S30N40-MM04TNNTNX		40	37.5	45	88	74		
F3S30N50-MM04TNNTNX		50	30	36	111	92		
F3S30N60-MM04TNNTNX		60	25	30	133	111		
F3S35N10-MD08TNNTNX	0.75	10	150	180	41	34	3.2×10^{-3}	21
F3S35N15-MD08TNNTNX		15	100	120	63	52		
F3S35N20-MD08TNNTNX		20	75	90	83	70		
F3S35N25-MD08TNNTNX		25	60	72	104	86		
F3S35N30-MD08TNNTNX		30	50	60	124	104		
F3S35N40-MD08TNNTNX		40	37.5	45	166	138		
F3S35N50-MD08TNNTNX		50	30	36	208	173		
F3S35N60-MD08TNNTNX		60	25	30	249	208		

[series : RGIS110,RGIT140]

Motor model No. [Tsubaki Emerson]	Output (kW)	Actual reduction ratio (ir)	Output shaft rotational speed Nrs (rpm)		Output shaft allowable torque Trr (N·m)		Moment of inertia of the motor Jm (kg·m²)	Weight (kg)
			50Hz	60Hz	50Hz	60Hz		
F3S35N20-MD08TNNTNX	0.75	20	75	90	83	70	3.2×10^{-3}	21
F3S35N25-MD08TNNTNX		25	60	72	104	86		
F3S35N30-MD08TNNTNX		30	50	60	124	104		
F3S35N40-MD08TNNTNX		40	37.5	45	166	138		
F3S35N50-MD08TNNTNX		50	30	36	208	173		
F3S35N60-MD08TNNTNX		60	25	30	249	208		
F3S45N10-MD15TNNTNX	1.5	10	150	180	83	70	6.2×10^{-3}	35.5
F3S45N15-MD15TNNTNX		15	100	120	124	104		
F3S45N20-MD15TNNTNX		20	75	90	166	138		
F3S45N25-MD15TNNTNX		25	60	72	208	173		
F3S45N30-MD15TNNTNX		30	50	60	249	208		
F3S45N40-MD15TNNTNX		40	37.5	45	332	276		
F3S45N50-MD15TNNTNX		50	30	36	416	345		
F3S45N60-MD15TNNTNX		60	25	30	498	416		

[series : RGIS140,RGIT180]

Motor model No. [Nissei]	Output (kW)	Actual reduction ratio (ir)	Output shaft rotational speed Nrs (rpm)		Output shaft allowable torque Trr (N·m)		Moment of inertia of the motor Jm (kg·m^2)	Weight (kg)
			50Hz	60Hz	50Hz	60Hz		
F3S45N20-MD15TNNTNX	1.5	20	75	90	166	138	6.2×10^{-3}	35.5
F3S45N25-MD15TNNTNX		25	60	72	208	173		
F3S45N30-MD15TNNTNX		30	50	60	249	208		
F3S45N40-MD15TNNTNX		40	37.5	45	332	276		
F3S45N50-MD15TNNTNX		50	30	36	416	345		
F3S45N60-MD15TNNTNX		60	25	30	498	416		

Motor model No. [Tsubakimoto Chain]	Output (kW)	Actual reduction ratio (ir)	Output shaft rotational speed Nrs (rpm)		Output shaft allowable torque Trr (N·m)		Moment of inertia of the motor Jm (kg·m^2)	Weight (kg)
			50Hz	60Hz	50Hz	60Hz		
HMTR220-45H10 F1S5	2.2	10	150	180	122	102	8.8×10^{-3}	43
HMTR220-45H15 F1S5		15	100	120	182	152		
HMTR220-45H20 F1S5		20	75	90	244	203		
HMTR220-45H25 F1S5		25	60	72	290	242		
HMTR220-45H30 F1S5		30	50	60	349	290		
HMTR220-45H40 F1S5		40	37.5	45	465	387		
HMTR220-45H50 F1S5		49.286	30	36	581	484		
HMTR220-45H60 F1S5		60	25	30	697	581		

[series : RGIS180,RGIT250]

Motor model No. (SEW)	Output (kW)	Actual reduction ratio (ir)	Output shaft rotational speed Nrs (rpm)		Output shaft allowable torque Trr (N·m)		Moment of inertia of the motor Jm (kg·m^2)	Weight (kg)
			50Hz	60Hz	50Hz	60Hz		
SHF 67 DRN 100L4 1/20.37	2.2	20.37	72	86	260	220	11.2×10^{-3}	63
SHF 67 DRN 100L4 1/23.33		23.33	63	75	290	240		
SHF 67 DRN 100L4 1/26.93		26.93	54	65	330	280		
SHF 67 DRN 100L4 1/29.63		29.63	49	59	360	300		
SHF 67 DRN 100L4 1/34.80		34.80	42	50	420	350		
SHF 67 DRN 100L4 1/36.85		36.85	40	48	440	370		
SHF 67 DRN 100L4 1/41.89		41.89	35	42	500	420		
SHF 67 DRN 100L4 1/46.40		46.40	31	38	550	460		
SHF 77 DRN 112M4 1/12.07	3.7	12.07	122	146	270	230	17.8×10^{-3}	93
SHF 77 DRN 112M4 1/15.28		15.28	96	115	340	290		
SHF 77 DRN 112M4 1/20.99		20.99	70	84	460	390		
SHF 77 DRN 112M4 1/25.07		25.07	59	70	540	450		
SHF 77 DRN 112M4 1/28.41		28.41	52	62	610	510		
SHF 77 DRN 112M4 1/32.38		32.38	45	54	690	580		
SHF 77 DRN 112M4 1/35.94		35.94	41	49	760	640		
SHF 77 DRN 112M4 1/41.07		41.07	36	43	860	730		
SHF 77 DRN 112M4 1/43.33		43.33	34	41	910	770		
SHF 77 DRN 112M4 1/49.38		49.38	30	36	1030	870		
SHF 77 DRN 112M4 1/53.87		53.87	27	33	1120	950		
SHF 77 DRN 112M4 1/56.92		56.92	26	31	1040	880		

[series : RGIS250]

Motor model No. (SEW)	Output (kW)	Actual reduction ratio (ir)	Output shaft rotational speed Nrs (rpm)		Output shaft allowable torque Trr (N·m)		Moment of inertia of the motor Jm (kg·m^2)	Weight (kg)
			50Hz	60Hz	50Hz	60Hz		
SHF 87 DRN 132S4 1/19.70	5.5	19.7	74	89	660	550	24.1×10^{-2}	150
SHF 87 DRN 132S4 1/25.50		25.5	57	69	850	710		
SHF 87 DRN 132S4 1/31.43		31.43	47	56	1020	850		
SHF 87 DRN 132S4 1/34.96		34.96	42	50	1130	940		
SHF 87 DRN 132S4 1/39.10		39.1	37	45	1260	1050		
SHF 87 DRN 132S4 1/44.03		44.03	33	40	1410	1180		
SHF 87 DRN 132S4 1/47.91		47.91	31	37	1530	1280		
SHF 87 DRN 132S4 1/57.00		57	26	31	1810	1520		
SHF 87 DRN 132M4 1/10.93	7.5	10.93	134	161	500	420	38.1×10^{-2}	165
SHF 87 DRN 132M4 1/15.64		15.64	94	113	710	600		
SHF 87 DRN 132M4 1/19.70		19.7	75	89	900	750		
SHF 87 DRN 132M4 1/25.50		25.5	58	69	1150	960		
SHF 87 DRN 132M4 1/31.43		31.43	47	56	1380	1160		
SHF 87 DRN 132M4 1/34.96		34.96	42	50	1530	1280		
SHF 87 DRN 132M4 1/39.10		39.1	38	45	1710	1430		
SHF 87 DRN 132M4 1/44.03		44.03	33	40	1920	1610		

Roller gear cam drive Standard/Table type

Characteristics table

[series RGIB250]

The values in parentheses ( ) are the weight of motor plate.

Motor model No. [Nissei]	Output (kW)	Actual reduction ratio (ir)	Output shaft rotational speed Nrs (rpm)		Output shaft allowable torque Trr (N·m)		Moment of inertia of the motor Jm (kg·m^2)	Weight (kg)
			50Hz	60Hz	50Hz	60Hz		
F3S45N10-MD22TNNTNX	2.2	10	150	180	122	102	10.5 × 10^{-3}	42
F3S45N15-MD22TNNTNX		15	100	120	182	152		
F3S45N20-MD22TNNTNX		20	75	90	244	203		
F3S45N25-MD22TNNTNX		25	60	72	305	254		
F3S45N30-MD22TNNTNX		30	50	60	366	305		
F3S50N40-MD22TNNTNX		40	37.5	45	487	406		51
F3S50N50-MD22TNNTNX		50	30	36	609	508		
F3S50N60-MD22TNNTNX		60	25	30	731	609		

Motor model No. [Tsubakimoto Chain]	Output (kW)	Actual reduction ratio (ir)	Output shaft rotational speed Nrs (rpm)		Output shaft allowable torque Trr (N·m)		Moment of inertia of the motor Jm (kg·m^2)	Weight (kg)
			50Hz	60Hz	50Hz	60Hz		
HMTR370-55H10 F1	3.7	10	150	180	205	171	16.7 × 10^{-3}	80
HMTR370-55H15 F1		15	100	120	308	256		
HMTR370-55H20 F1		20	75	90	410	341		
HMTR370-55H25 F1		25	60	72	489	407		
HMTR370-55H30 F1		30	50	60	586	489		
HMTR370-55H40 F1		40	37.5	45	782	652		
HMTR370-55H50 F1		50	30	36	977	814		
HMTR370-55H60 F1		60	25	30	1176	977		

●MEMO

● MEMO

● MEMO

Ver. 5: Revisions
- Dimensional figures are corrected.

Ver. 6: Revisions
- RG*S, RG*T, RGIB, RG*D
  Sizes (shaft interval) 300 to 700 are removed.
- Error corrected

Ver. 7: Revisions
- Changed hollow shaft geared motor model No., dimensions and characteristic table
- Clerical corrections

Ver. 8: Revisions
- Compact multi-segmented type and flat type deleted
- Changed hollow shaft geared motor model No., dimensions, etc.
- Clerical corrections

Index Drives General Catalog

Catalog No.CB-019SA8

Published: Aug. 2021. 8th Edition
Published by **CKD Corporation**
2-250 Ouji, Komaki City, Aichi 485-8551, Japan
https://www.ckd.co.jp/en/
Price 600 yen (tax not included)

CKD WARRANTY

Subject to the conditions below, CKD Corporation ("CKD") warrants the first end user (the "Buyer") that CKD's products are free from defects in material and workmanship.

CKD will, at CKD's option, either repair or replace a defective product, including lowest transportation costs but not including installation or any other similar charges, provided that (1) the buyer notifies CKD in writing of the claimed defect within one year from the date Buyer received the product, (2) provides a complete explanation of the defect, the application of the product, and such other information concerning use of the product as CKD may request, and (3) returns the product to CKD in accordance with CKD's specific written instructions and authorization obtained from CKD prior to return of the product, and CKD's inspection confirms that the product was defective.

This warranty applies only if the product was used and applied correctly under normal operating conditions and good engineering practice; was installed, operated and maintained in accordance with all instructions issued or published by CKD; was used within stated pressure, media and operating limitations published by CKD and in effect on the date of shipment; and was not subject to abuse, misuse or unauthorized modification.

THIS WARRANTY IS THE ONLY AUTHORIZED CKD WARRANTY AND IN LIEU OF ALL OTHER WARRANTIES, EXPRESSED OR IMPLIED, INCLUDING ANY IMPILIED WARRANTY OF MERCHANTABILITY OR FITNESS FOR A PARTICULAR PURPOSE, notwithstanding any disclosure to CKD of the use to which the product is to be put. The Buyer's **SOLE AND EXCLUSIVE REMEDY** on any claim of any kind for any loss or damage arising out of the manufacture, sale, delivery or use of CKD's products shall be for the repair or replacement of any defective products as provided herein.

IN NO EVENT SHALL CKD BE LIABLE FOR BUSINESS INTERRUPTIONS, LOSS OF PROFITS, PERSONAL INJURY, COSTS OF DELAY OR FOR ANY OTHER SPECIAL, INDIRECT, INCIDENTAL OR CONSEQUENTIAL LOSSES, COSTS OR DAMAGES. There are no warranties, expressed or implied, made by CKD other than the warranty against defects in material and workmanship set forth above, and CKD neither assumes nor authorizes any other person or firm to assume for it any other obligations or liability.

CKD shall not be liable for any trouble, malfunction and damages of CKD products caused, directly or indirectly, by disaster or any other causes not attributable to CKD’s responsibility. CKD also shall not be responsible for any trouble, malfunction and damages of CKD Products caused by the lack or malfunction of safety circuit or structure or function that should be commonly equipped in the Buyer's equipment in which the CKD products were used.

CKD MAINTAINS A POLICY OF ONGOING PRODUCT DEVELOPMENT AND INPROVEMENT. WE THEREFORE RESERVE THE RIGHT TO CHANGE DIMENSIONS, SPECIFICATIONS AND DESIGN WITHOUT NOTICE.

WORLD-NETWORK

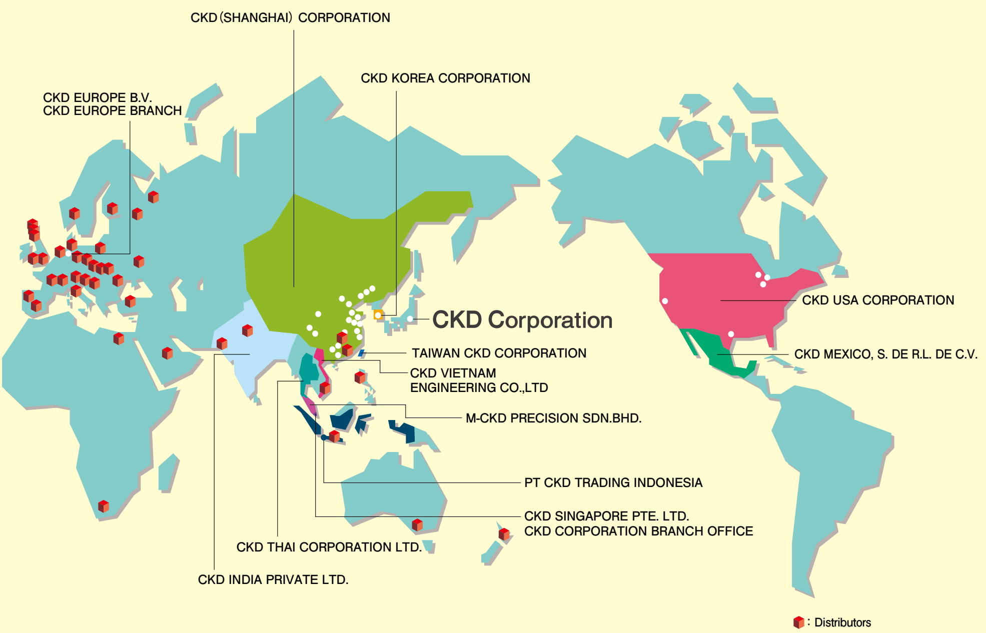

CKD Corporation

Website https://www.ckd.co.jp/

□ 2-250 Ouji, Komaki City, Aichi 485-8551, Japan
□ PHONE +81-568-74-1338 FAX +81-568-77-3461

ASIA

喜開理(上海)機器有限公司
CKD(SHANGHAI)CORPORATION

●営業部 / 上海浦西事務所(SALES HEADQUARTERS / SHANGHAI PUXI OFFICE)
Room 601, 6th Floor, Yuanzhongkeyan Building, No. 1905
Hongmei Road, Xinhui District, Shanghai 200233, China
PHONE +86-21-61911888 FAX +86-21-60905356

- 上海浦東事務所(SHANGHAI PUDONG OFFICE)
- 寧波事務所(NINGBO OFFICE)
- 杭州事務所(HANGZHOU OFFICE)
- 無錫事務所(WUXI OFFICE)
- 昆山事務所(KUNSHAN OFFICE)
- 蘇州事務所(SUZHOU OFFICE)
- 南京事務所(NANJING OFFICE)
- 合肥事務所(HEFEI OFFICE)
- 成都事務所(CHENGDU OFFICE)
- 武漢事務所(WUHAN OFFICE)
- 鄭州事務所(ZHENGZHOU OFFICE)
- 長沙事務所(CHANGSHA OFFICE)
- 重慶事務所(CHONGQING OFFICE)
- 西安事務所(XIAN OFFICE)
- 広州事務所(GUANGZHOU OFFICE)
- 中山事務所(ZHONGSHAN OFFICE)
- 深圳西事務所(WEST SHENZHEN OFFICE)
- 深圳東事務所(EAST SHENZHEN OFFICE)
- 東莞事務所(DONGGUAN OFFICE)
- 厦門事務所(XIAMEN OFFICE)
- 福州事務所(FUZHOU OFFICE)
- 瀋陽事務所(SHENYANG OFFICE)
- 大連事務所(DALIAN OFFICE)
- 長春事務所(CHANGCHUN OFFICE)
- 北京事務所(BEIJING OFFICE)
- 天津事務所(TIANJIN OFFICE)
- 青島事務所(QINGDAO OFFICE)
- 濰坊事務所(WEIFANG OFFICE)
- 済南事務所(JINAN OFFICE)
- 烟台事務所(YANTAI OFFICE)

CKD INDIA PRIVATE LTD.

●HEADQUARTERS
Unit No. 607, 6th Floor, Welldone Tech Park, Sector 48,
Sohna Road, Gurgaon-122018, Haryana, India
PHONE +91-124-418-8212 FAX +91-(0)124-418-8216

- BANGALORE OFFICE
- PUNE OFFICE

PT CKD TRADING INDONESIA

●HEAD OFFICE
Menara Bidakara 2, 18th Floor, Jl. Jend. Gatot Subroto Kav.
71-73, Pancoran, Jakarta 12870, Indonesia
PHONE +62-21-2938-6601 FAX +62-21-2906-9470

- MEDAN OFFICE
- BEKASI OFFICE
- KARAWANG OFFICE
- SEMARANG OFFICE
- SURABAYA OFFICE

CKD KOREA CORPORATION

●HEADQUARTERS
(3rd Floor), 44, Sinsu-ro, Mapo-gu, Seoul 04088, Korea
PHONE +82-2-783-5201～5203 FAX +82-2-783-5204

- 水原営業所(SUWON OFFICE)
- 天安営業所(CHEONAN OFFICE)
- 蔚山営業所(ULSAN OFFICE)

M-CKD PRECISION SDN.BHD.

●HEAD OFFICE
Lot No.6,Jalan Modal 23/2, Seksyen 23, Kawasan MIEL,
Fasa 8, 40300 Shah Alam,Selangor Darul Ehsan, Malaysia
PHONE +60-3-5541-1468 FAX +60-3-5541-1533

- JOHOR BAHRU BRANCH OFFICE
- PENANG BRANCH OFFICE

CKD SINGAPORE PTE. LTD.

No.33 Tannery Lane #04-01 Hoesteel Industrial
Building, Singapore 347789, Singapore
PHONE +65-67442623 FAX +65-67442486

CKD CORPORATION BRANCH OFFICE

No.33 Tannery Lane #04-01 Hoesteel Industrial
Building, Singapore 347789, Singapore
PHONE +65-67447260 FAX +65-68421022

CKD THAI CORPORATION LTD.

●HEADQUARTERS
19th Floor, Smooth Life Tower, 44 North Sathorn Road,
Silom, Bangrak, Bangkok 10500, Thailand
PHONE +66-2-267-6300 FAX +66-2-267-6304-5

- NAVANAKORN OFFICE
- EASTERN SEABOARD OFFICE
- LAMPHUN OFFICE
- KORAT OFFICE
- AMATANAKORN OFFICE
- PRACHINBURI OFFICE
- SARABURI OFFICE

台湾喜開理股份有限公司
TAIWAN CKD CORPORATION

●HEADQUARTERS
16F-3, No. 7, Sec. 3, New Taipei Blvd., Xinzhuang Dist.,
New Taipei City 242, Taiwan
PHONE +886-2-8522-8198 FAX +886-2-8522-8128

- 新竹営業所(HSINCHU OFFICE)
- 台中営業所(TAICHUNG OFFICE)
- 台南営業所(TAINAN OFFICE)
- 高雄営業所(KAOHSIUNG OFFICE)

CKD VIETNAM ENGINEERING CO.,LTD.

●HEADQUARTERS
18th Floor, CMC Tower, Duy Tan Street, Cau Giay
District, Hanoi, Vietnam
PHONE +84-24-3795-7631 FAX +84-24-3795-7637

- HO CHI MINH OFFICE

EUROPE

CKD EUROPE B.V.

●HEADQUARTERS
Beechavenue 125A, 1119 RB Schiphol-Rijk, the Netherlands
PHONE +31-23-554-1490

- CKD EUROPE GERMANY OFFICE
- CKD EUROPE UK
- CKD EUROPE CZECH O.Z.

CKD CORPORATION EUROPE BRANCH

Beechavenue 125A, 1119 RB Schiphol-Rijk, the Netherlands
PHONE +31-23-554-1490

NORTH AMERICA & LATIN AMERICA

CKD MEXICO, S. DE R.L. DE C.V.

Cerrada la Noria No. 200 Int. A-01, Querétaro Park II,
Parque Industrial Querétaro, Santa Rosa Jáuregui,
Querétaro, C.P. 76220, México
PHONE +52-442-161-0624

CKD USA CORPORATION

●HEADQUARTERS
1605 Penny Lane, Schaumburg, IL 60173, USA
PHONE +1-847-648-4400 FAX +1-847-565-4923

- LEXINGTON OFFICE
- SAN ANTONIO OFFICE
- SAN JOSE OFFICE/ TECHNICAL CENTER
- DETROIT OFFICE
- BOSTON OFFICE

CKD Corporation

https://www.ckd.co.jp/en/
2-250 Ouji, Komaki City,
Aichi 485-8551, Japan