Sumitomo Drive Technologies

Always on the Move

ASTERO®

Gear Motors

6 ~ 90 w

No.E0201E-2.0

BIBUS

BIBUS s.r.o.
+420 547 125 300
www.bibus.cz

Astero™

Gear Motors & Controllers

A Global Standard for Compact Gear Motors from Sumitomo Heavy Industries

FEATURES AND BENEFITS

- Involute gear, Parallel shaft type
  Grease lubricated units
  （Maintenance free and universal mounting）

- Clear silver metallic color

- High quality materials are used throughout.
  Sealed ball bearing, Steel gears, Aluminum housing

- CE Marking（with Thermal protect）
  UL Standard（115V Single phase motor）

- Motor and Gearhead come apart for easy use.
  （Motor and Gearhead are sold separately）

BIBUS

BIBUS s.r.o.
+420 547 125 300
www.bibus.cz

⚠ CAUTION

General

- The gear head and motor should be operated only within its name plate and catalogue; otherwise, electric shock, injury or damage to a system may occur.
- Keep hands and all foreign objects from the internal moving part of the gear unit and motor; otherwise, electric shock, injury, fire or damage to a system may occur.
- Damaged units should be taken off-line; otherwise injury or fire may occur.
- Do not remove the name plate.
- Any modifications or alterations of any kind, to the unit, will void the warranty and all subsequent claims.

Transport

- Exercise ample care not to drop the unit and fall during transport.

Installation

- Do not place any inflammables around the gear head and motor; otherwise , fire may result.
- Do not place any objects that will hinder ventilation around motor; otherwise, cooling effect is reduced, and may lead to a possible fire hazard and burn due to excessive heat built-up.
- Do not touch the key way at the shaft end or on the inside of the gear unit and motor; otherwise, injury may result.
- When the unit is used in food processing applications vulnerable to oil contamination, install an oil pan or other such device to cope with rate oil leaking. Otherwise, oil leakage may damage products.

Coupling with other machines

- Install appropriate guard devices around rotation parts; otherwise, injury may result.
- Confirm the direction of rotation before coupling the unit with its driven machine. Defference in the direction of rotation may cause injury or damage to the system.

Wiring

- Do not touch lead wire when measuring the insulation resistance. Electric shock may result.

⚠ DANGER

Wiring

- Connect a power cable to the motor according to the connection diagram or maintenance manual; otherwise, electric shock or fire may result. (Without terminal box, exercise insulation in the connecting part.
- Do not forcibly curve, pull or clamp the power cable and lead wires otherwise, electric shock may result.
- Correctly ground the grounding bolt; otherwise, electric shock may result.
- Use power source stated in the nameplate; otherwise, motor's burning or fire may result.

Operation

- Never approach or touch any rotating parts (shaft, etc.) during operation; otherwise, loose clothing caught in these rotation parts may result in severe injury.
- When the power supply is interrupted, be sure to turn off the power switch. Unexpected resumption of power may cause injury or damage to the equipment.

Daily inspection and maintenance

- Never approach or touch any rotating parts (shaft, etc.) during maintenance; otherwise, loose clothing caugth in these rotating parts may result in severe injury.

Inspection upon delivery

- Verity that the unit received is in fact the one ordered. When a different product is installed, injury or damage to the system may result.

The Sumitomo Heavy Industries Power Transmission & Control (PTC) Group has been a leader in the gear box and gear motor market for over 60 years.

Our mission in to work with custmers worldwide to devise power transmission equipment solusions that provide the optimum technology and reliability.

We listen to the needs of our customers to develop cutting-edge techonology and products, and manufacture the products that best meet the needs of world markets.

The Available Solution,Worldwide

A Global Presence
The PTC Group's 8 manufacturing plants, 35 assnmble plants and 226 sales offices are located in over 50 countries worldwide. In each of the countries we do business in, our goal is to create the optimum partnership with our customers and their end users.

Sumitomo Heavy Industries, Ltd.

Sumitomo Heavy Industries, Ltd

Headquaters : Sumitomo Jukikai Bldg., 5-9-11 Kita-Shinagawa, shinagawa-ku, Tokyo, Japan 141-8686

Founded : November 20, 1888

Established : November 1, 1934

Capital : 30,871,6500,000yen (as at March 31, 2001) Number of employees

For all consolidated
: 12,411 (as at March 31, 2001)

For Sumitomo Heavy Industries alone
: 4,699 (as at March 31, 2001)

Power Transmission and Controls Group

Headquarters and manufacturing
: U.S.A., Canada, England, Germany, Singapore, China, Korea, Taiwan, Japan

Office : Over 50 countries worldwide

Contents

Overview

Sumitomo Heavy Industries gear boxes and gear motors

Since the release of our first Cyclo speed reducer in 1939, Sumitomo Heavy Industries has been a leader in the gear box and gear motors market, continually working with customers to devise applications and solutions that incorporate the latest technology.

In addition to our gear motors and speed variators, we also make a wide range of electric motors, AC inverters and AC servo motors. Our extensive lineup of products ranges from ultra-compact models with capacities of a few watts, to large gear boxes with several hundred kW capacities.

The unique configurations and technology used in all our products are the result of our commitment to the ultimate performance and reliability, and of our expertise in speed reducers, motors and controllers.

Cydo disk used in the center of the Cyclo speed readucers.

The unique tooth shape creates powerful torque.

Caps	PTC products item	Parallel shaft	Right-angle shaft
6 ~ 90 W	Compact gear motors	Astero™  Astero gear motors 6W～90W ●Standard parallel shaft helical gear motors catalog products	Hyponic® GEARMOTOR  Hyponic® gear motors 15W～90W ●High-efficiency, high-strength gear motors using hypoid gears ●Water-resistant model (IP65) also available.
0.1 ~ 2.2 kW	Small gear motors	Altax® α  Altax® gear motors 90W～2.2kW ●A compact gear motors using a powerful Cyclo speed reducer's mechanism	Hyponic® GEARMOTOR  Hyponic® gear motor 0.1～5.5kW ●Hypoid gears combining high efficiency and low noise

Astero™

■ **Astero™**
Gear motors
Gear heads

A-motor

■ **A-motor**
Motors
Speed controllers
Brake Packs

Products in this catalog

The Astero™ Series is a lineup of compact gear motors with the lowest capacity range (6 to 90 W) of any of Sumitomo's products. The Series features highly reliable Astero gear heads (combining helical gears and spur gears), A-motors (special Astero motors), and a variety of options and control equipment (such as speed controllers).

A wide range of motors is available for several applications and operating environments. Gear heads and motors for all models are sold separately, and can be used in any combination.

ASTERO™ Motors A-motor		Power 1ph	Power 3ph	Speed	Speed Change over tining	Brake	Stored Torque	Lead wire tipe	Time ratings	Other	Page Overview	Page Ratings
Constant speed	Induction motors	○	○	Constant speed	After stopping motor	Natural stop ＊1	No	Lead wire	Continuous		10	14
Constant speed	Reversible motors	○		Constant speed	Immediate stop & start	Simple buit-in brake	No	Lead wire	30mim		28	34
Constant speed	Motors with Electromagnetic brakes	○	○	Constant speed	Immediate stop & start	Electro-magnetic brake	Yes	Lead wire	1ph 30min 3ph Continuous		48	50
Constant speed	Induction motors with Trminal boxes	○	○	Constant speed	After stopping motor	Natural stop ＊1	No	W/ Terminal box	Continuous		64	66
Constant speed	Reversible motor with Trminal boxes	○		Constant speed	Immediate stop & start	Simple buit-in brake	No	W/ Terminal box	30mim		64	66

ASTERO™ Motors A-motor		Power 1ph	Power 3ph	Speed	Speed Change over tining	Brake	Stored Torque	Lead wire tipe	Time ratings	Other	Page Overview	Page Ratings
Variable speed	Unit type Induction motors	○		Variable speed	After stopping motor	Natural stop	No	Lead wire 300mm with special connector	Continuous	Easy connection	96	100
Variable speed	Socket type Induction motors	○		Variable speed	After stopping motor	Immediate stop ＊2	No	Lead wire 300mm	Continuous	Soft Start Soft Stop	115	129
Variable speed	Socket type Reversible motors	○		Variable speed	Immediate stop and start	Immediate stop ＊2	No	Lead wire 300mm	30mim	Soft Start Soft Stop	115	143
Variable speed	Socket type Electromagnetic brakes	○		Variable speed	Immediate stop and start	Electro-magnetic brake	Yes	Lead wire 300mm	30mim	Soft Start Soft Stop	115	153

Speed Controller	Page specs
Unit type overview wiring diagram	96
Socket type Induction motors overview wiring diagram	120
Socket type Reversible motors overview wiring diagram	122
Socket type Electromagnetic brakes overview wiring diagram	124

＊1：Immediate stop is possible with brake packs.
＊2：External resistor for braking should be installed outside

ASTERO™ Gear Heads	Gear heads				Intermediate Gear heads		
	Output shaft	Lubrication	Brg	Reduction ratio	Lubrication	Brg	Reduction ratio
60mm □ 6W 70mm □ 15W 80mm □ 25W 90mm □ 40W 90mm □ 60W, 90W	D-cut type Key type	Grease	Ball Brg	3, 3.6, 5, 6, 7.5, 9, 10 12.5, 15, 18, 20 25, 30, 36, 40 50, 60, 75, 90, 100 120, 150, 180, 200	Grease	Ball Brg	10

Overview

Nomenclature

A-motor

Astero gear motors(Output shaft is helical gear type)

A — 7 — M — 15 — A — [ ] — [ ]

Series: A

Frame size

6	60mm
7	70mm
8	80mm
9	90mm

Output power

6	6W
15	15W
25	25W
40	40W
60	60W
90	90W

Shaft type

—	6～40W
H	60,90W

Option

Lead wires	—
Electromagnetic brake	B
Terminal box	T

＊Models with electromagnetic brakes have option symbol 'B' at the end of the nomenclature.

Motor type

Type \ Speed		Constant	Variable	
			Unit-type	Socket-type
Induction		M	U	HM
Reversible		R	—	HR
Electro-magnetic brake	1ph	R＊	—	HR＊
	3ph	M＊	—	—

Voltage symbol

	Phase	Voltage(Frequency)	
A	1ph	100V (50/60Hz)	110V (60Hz)
B	1ph	115V (60Hz)	
C	1ph	200V (50/60Hz)	220V (60Hz)
D	1ph	220V (50Hz)	240V (50Hz)
J	3ph	200V (50/60Hz)	220V (50/60Hz)
K	3ph	400V (50/60Hz) 380V (50/60Hz)	440V (50/60Hz) 415V (50/60Hz)

＊The applicable voltage depends on the motor output and motor type. See the rating table for more information.

Speed controllers

CAU — 15 — A

Type

CAU	Unit-type
CAH	Socket-type

Output

6	6W
15	15W
25	25W
40	40W
60	60W
90	90W

＊The CAH type has an output of 90 W regardless of the motor output.

Voltage symbol

	Phase	Voltage(Frequency)	
A	1ph	100V (50/60Hz)	110V (60Hz)
C	1ph	200V (50/60Hz)	220V (60Hz)
D	1ph	220V (50Hz)	240V (50Hz)

■Speed controllers
- Can control the motor speed over a wide range.
- Each controller type must be used with its own motor type (with speed detector).

■Unit-type speed controllers
- Simple wiring and speed control switch built into panel enable use right away.
- For use with type 'U' induction motors.
- Controller dimensions: 60 x 100 x 98.5 mm (W x H x D)

■Socket-type speed controllers
- Multi-functional speed controllers
- Built-in soft start, soft stop functions
- Built-in electronic brake
- Can be used with induction motors, reversible motors, or motors with electromagnetic brakes
- Controller dimensions (main unit): 50 x 80 x 92 mm (W x H x D)

Brake packs

BAS — A

Type

BAS	Brake packs

Voltage symbol

	Phase	Voltage(Frequency)	
A	1ph	100V (50/60Hz)	110V (60Hz)
C	1ph	200V (50/60Hz)	220V (60Hz)
D	1ph	220V (50Hz)	240V (50Hz)

■Brake packs
- Used to stop single-phase motors instantly.
- Non contact type
- Can be used with type 'M' induction motors and type 'R' reversible motors.
- Unlike electromagnetic brakes, brake packs don't store and hold braking torque (brake packs are electronic brakes).

Astero™

Astero gear heads

G — 7 — 20 — K — [ ]

Series

Frame size

	Frame size	Motor size
6	60mm	6W
7	70mm	15W
8	80mm	25W
9A	90mm	40W
9B	90mm	60W、90W

Reduction Ratio

＊Refer to the following

Output shaft type

D	D-cut type
K	Key type

(6 W model is D-cut type, other models are key type.)

Shaft type

—	6～40W
H	60,90W

Intermediate gear heads

G — 7 — XH — 10 — [ ]

Series

Flame size

	Flame size	Motor size
6	60mm	6W
7	70mm	15W
8	80mm	25W
9A	90mm	40W
9B	90mm	60W、90W

Int.gear head symbol

Reduction Ratio

10	10 : 1

Shart type

—	6～40W
H	60,90W

■Intermediate gear heads

- Can be added to gear heads when a motor speed with a reduction ratio of bigger than 200 is needed.
- When an intermediate gear head is used, the speed reduction ratio is 10 times the gear head reduction ratio.

Mounting plate

G — 7 — FM

Series

Mounting plate symbol

Flame size

	Flame size	Motor size
6	60mm	6W
7	70mm	15W
8	80mm	25W
9A	90mm	40W
9B	90mm	60W、90W

※Reduction ratio

- Gear head output speed = motor output speed / reduction ratio
- The Astero gear head reduction ratios are listed below.

Reduction ratio							
3	3.6	5	6	7.5	9	10	12.5
15	18	20	25	30	36	40	50
60	75	90	100	120	150	180	200

Overview

Products line up

A-motor

■Astero gear motors(Output shaft is helical gear type)

Flame size (mm)	Output power	Phase	Voltage(Frequency)		Constant speed									
					Induction	P	Reversible	P	Electromagnetic brake	P	Induction W/Terminal box	P	Reversible W/Terminal box	P
60	6W	1ph	100V(50/60Hz)	110V(60Hz)	A6M06A	14	A6R06A	34	A6R06AB	50	A6M06AT	66	A6R06AT	66
			115V(60Hz)		A6M06B		A6R06B		A6R06BB		A6M06BT		A6R06BT	
			200V(50/60Hz)	220V(60Hz)	A6M06C		A6R06C		A6R06CB		A6M06CT		A6R06CT	
			220V(50Hz)	240V(50Hz)	A6M06D		A6R06D		A6R06DB		A6M06DT		A6R06DT	
70	15W	1ph	100V(50/60Hz)	110V(60Hz)	A7M15A	16	A7R15A	36	A7R15AB	52	A7M15AT	70	A7R15AT	70
			115V(60Hz)		A7M15B		A7R15B		A7R15BB				A7R15BT	
			200V(50/60Hz)	220V(60Hz)	A7M15C		A7R15C		A7R15CB		A7M15CT		A7R15CT	
			220V(50Hz)	240V(50Hz)	A7M15D		A7R15D		A7R15DB		A7M15DT		A7R15DT	
80	25W	1ph	100V(50/60Hz)	110V(60Hz)	A8M25A	18	A8R25A	38	A8R25AB	54	A8M25AT	74	A8R25AT	74
			115V(60Hz)		A8M25B		A8R25B		A8R25BB				A8R25BT	
			200V(50/60Hz)	220V(60Hz)	A8M25C		A8R25C		A8R25CB		A8M25CT		A8R25CT	
			220V(50Hz)	240V(50Hz)	A8M25D		A8R25D		A8R25DB		A8M25DT		A8R25DT	
		3ph	200V(50/60Hz)	220V(50/60Hz)	A8M25J				A8M25JB		A8M25JT			
			400V(50/60Hz) 380V(50/60Hz)	440V(50/60Hz) 415V(50/60Hz)	A8M25K				A8M25KB		A8M25KT			
90	40W	1ph	100V(50/60Hz)	110V(60Hz)	A9M40A	20	A9R40A	40	A9R40AB	56	A9M40AT	78	A9R40AT	78
			115V(60Hz)		A9M40B		A9R40B		A9R40BB				A9R40BT	
			200V(50/60Hz)	220V(60Hz)	A9M40C		A9R40C		A9R40CB		A9M40CT		A9R40CT	
			220V(50Hz)	240V(50Hz)	A9M40D		A9R40D		A9R40DB		A9M40DT		A9R40DT	
		3ph	200V(50/60Hz)	220V(50/60Hz)	A9M40J				A9M40JB		A9M40JT			
			400V(50/60Hz) 380V(50/60Hz)	440V(50/60Hz) 415V(50/60Hz)	A9M40K				A9M40KB		A9M40KT			
90	60W	1ph	100V(50/60Hz)	110V(60Hz)	A9M60AH	22	A9R60AH	42	A9R60AHB	58	A9M60AHT	82	A9R60AHT	82
			115V(60Hz)		A9M60BH		A9R60BH		A9R60BHB				A9R60BHT	
			200V(50/60Hz)	220V(60Hz)	A9M60CH		A9R60CH		A9R60CHB		A9M60CHT		A9R60CHT	
			220V(50Hz)	240V(50Hz)	A9M60DH		A9R60DH		A9R60DHB		A9M60DHT		A9R60DHT	
		3ph	200V(50/60Hz)	220V(50/60Hz)	A9M60JH				A9M60JHB		A9M60JHT			
			400V(50/60Hz) 380V(50/60Hz)	440V(50/60Hz) 415V(50/60Hz)	A9M60KH				A9M60KHB		A9M60KHT			
90	90W	1ph	100V(50/60Hz)	110V(60Hz)	A9M90AH	24	A9R90AH	44	A9R90AHB	60	A9M90AHT	86	A9R90AHT	86
			115V(60Hz)		A9M90BH		A9R90BH		A9R90BHB				A9R90BHT	
			200V(50/60Hz)	220V(60Hz)	A9M90CH		A9R90CH		A9R90CHB		A9M90CHT		A9R90CHT	
			220V(50Hz)	240V(50Hz)	A9M90DH		A9R90DH		A9R90DHB		A9M90DHT		A9R90DHT	
		3ph	200V(50/60Hz)	220V(50/60Hz)	A9M90JH				A9M90JHB		A9M90JHT			
			400V(50/60Hz) 380V(50/60Hz)	440V(50/60Hz) 415V(50/60Hz)	A9M90KH				A9M90KHB		A9M90KHT			

Astero™

■Astero gear heads

Ratio	6W	15W	25W	40W	60W,90W
	60mm	70mm	80mm	90mm	90mm
3	G63D	G73K	G83K	G9A3K	G9B3KH
3.6	G63.6D	G73.6K	G83.6K	G9A3.6K	G9B3.6KH
5	G65D	G75K	G85K	G9A5K	G9B5KH
6	G66D	G76K	G86K	G9A6K	G9B6KH
7.5	G67.5D	G77.5K	G87.5K	G9A7.5K	G9B7.5KH
9	G69D	G79K	G89K	G9A9K	G9B9KH
10	G610D	G710K	G810K	G9A10K	G9B10KH
12.5	G612.5D	G712.5K	G812.5K	G9A12.5K	G9B12.5KH
15	G615D	G715K	G815K	G9A15K	G9B15KH
18	G618D	G718K	G818K	G9A18K	G9B18KH
20	G620D	G720K	G820K	G9A20K	G9B20KH
25	G625D	G725K	G825K	G9A25K	G9B25KH
30	G630D	G730K	G830K	G9A30K	G9B30KH

Ratio	6W	15W	25W	40W	60W,90W
	60mm	70mm	80mm	90mm	90mm
36	G636D	G736K	G836K	G9A36K	G9B36KH
40	G640D	G740K	G840K	G9A40K	G9B40KH
50	G650D	G750K	G850K	G9A50K	G9B50KH
60	G660D	G760K	G860K	G9A60K	G9B60KH
75	G675D	G775K	G875K	G9A75K	G9B75KH
90	G690D	G790K	G890K	G9A90K	G9B90KH
100	G6100D	G7100K	G8100K	G9A100K	G9B100KH
120	G6120D	G7120K	G8120K	G9A120K	G9B120KH
150	G6150D	G7150K	G8150K	G9A150K	G9B150KH
180	G6180D	G7180K	G8180K	G9A180K	G9B180KH
200	G6200D	G7200K	G8200K	G9A200K	G9B200KH

■Intermediate gear heads

10	G6XH10	G7XH10	G8XH10	G9AXH10	G9BXH10H

A-motor

■Astero gear motors(Output shaft is helical gear type)

Voriable speed（Motor+Speed controllers）								Applicable gear heads
Unit-type Induction motors	P	Socket-type Induction motors	P	Socket-type Reversible motors	P	Socket-type Reversible motor w/electromagnetic brake	P	
A6U06A +CAU06A	100	A6HM06A +CAH90A	130	A6HR06A +CAH90A	144	A6HR06AB +CAH90A	154	G6□D □: Reduction ratio Output shaft type: D-cut type Intermediate gear head: G6XH10
A6U06C +CAU06C		A6HM06C +CAH90C		A6HR06C +CAH90C		A6HR06CB +CAH90C		
A6U06D +CAU06D		A6HM06D +CAH90D		A6HR06D +CAH90D		A6HR06DB +CAH90D		
A7U15A +CAU15A	102	A7HM15A +CAH90A	132	A7HR15A +CAH90A	146	A7HR15AB +CAH90A	156	G7□K □: Reduction ratio Output shaft type: D-cut type Intermediate gear head: G7XH10
A7U15C +CAU15C		A7HM15C +CAH90C		A7HR15C +CAH90C		A7HR15CB +CAH90C		
A7U15D +CAU15D		A7HM15D +CAH90D		A7HR15D +CAH90D		A7HR15DB +CAH90D		
A8U25A +CAU25A	104	A8HM25A +CAH90A	134	A8HR25A +CAH90A	148	A8HR25AB +CAH90A	158	G8□K □: Reduction ratio Output shaft type: D-cut type Intermediate gear head: G8XH10
A8U25C +CAU25C		A8HM25C +CAH90C		A8HR25C +CAH90C		A8HR25CB +CAH90C		
A8U25D +CAU25D		A8HM25D +CAH90D		A8HR25D +CAH90D		A8HR25DB +CAH90D		
A9U40A +CAU40A	106	A9HM40A +CAH90A	136	A9HR 40A +CAH90A	150	A9HR40AB +CAH90A	160	G9A□K □: Reduction ratio Output shaft type: Key type Intermediate gear head: G9AXH10 Note: Gear heads for use with 40 W motor only. Can't be used with 60 or 90 W motors.
A9U40C +CAU40C		A9HM40C +CAH90C		A9HR 40C +CAH90C		A9HR40CB +CAH90C		
A9U40D +CAU40D		A9HM40D +CAH90D		A9HR 40D +CAH90D		A9HR40DB +CAH90D		
A9U60AH +CAU60A	108	A9HM60AH +CAH 90A	138					G9B□KH □: Reduction ratio Output shaft type: Key type Intermediate gear head: G9BXH10 Note: Gear heads for use with 60 or 90 W motors only. Can't be used with 40 W motors.
A9U60CH +CAU60C		A9HM60CH +CAH 90C						
A9U60DH +CAU60D		A9HM60DH +CAH 90D						
A9U90AH +CAU90A	110	A9HM90AH +CAH 90A	140					G9B□KH □: Reduction ratio Output shaft type: Key type Intermediate gear head: G9BXH10 Note: Gear heads for use with 60 or 90 W motors only. Can't be used with 40 W motors.
A9U90CH +CAU90C		A9HM90CH +CAH 90C						
A9U90DH +CAU90D		A9HM90DH +CAH 90D						

Note: Motor and gear head are sold separately. (Customers assemble them by themselves).

■ Brake packs

Voltage(Frequency)	Type
1ph 100V (50/60Hz) 110V(60Hz)	BASA
1ph 200V (50/60Hz) 220V(60Hz)	BASC
1ph 220V (50Hz) 240V(50Hz)	BASD

■ Mounting plate

Capacity	□Size	Type
6W	60mm	G6FM
15W	70mm	G7FM
25W	80mm	G8FM
40W	90mm	G9AFM
60,90W	90mm	G9BFM

■ External speed control switchs

Resistor(Ω)	Type
20kΩ	EAVR20

＊Used with Socket-type speed controllers.

■ CR circuits for surge voltage absorber

Voltage symbol（V）	Type
250	EACR25
500	EACR50

＊Used with Socket-type speed controllers.

■ External resistors for braking

Type	Resistor(Ω)	Rating power
EABR10H10	10kΩ	10W

＊Used with Socket-type speed controllers.

■ Extension cables

Length(m)	Type
0.5	EAWE05
1.0	EAWE10
1.5	EAWE15
2.0	EAWE20

＊Used with unit-type speed controllers.

Astero,a gear motor pursuing quality & usability

A-Motor

Astero™

Gear Motors & Controllers

Induction Motors (1 phase, 3 phase)

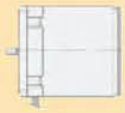

Widely used general motor
The motor is suited for continuous driving at constant speed.

Power : 6W,15W,25W,40W,60W,90W
Voltage symbol : A,B,C,D,J,K

Reversible Motors (1 phase)

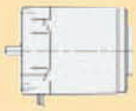

The rotating direction can be changed in an instant.
The motor is suited for frequent change of the rotating direction at constant speed.

Power : 6W,15W,25W,40W,60W,90W
Voltage symbol : A,B,C,D

Motors with Electromagnetic Brake (1 phase, 3 phase)

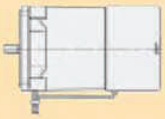

Motors with Electromagnetic Brake (1 phase, 3 phase) The motor has a built-in electromagnetic brake and can store after stopping

Power : 6W,15W,25W,40W,60W,90W
Voltage symbol : A,B,C,D,J,K

Motors with Terminal Box (1 phase, 3 phase)

The motor is equipped with terminal box.
There are induction and reversible motors.

Power : 6W,15W,25W,40W,60W,90W
Voltage symbol : A,B,C,D,J,K

Induction Motors for Unit type Speed Controller (1 phase)

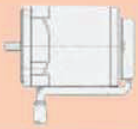

The rotating speed can be changed as you like.
The motor comes with a controller of the unit type as a set and features the simple wiring.

Power : 6W,15W,25W,40W,60W,90W
Voltage symbol : A,B,C,D,J,K

Induction Motos for Socket type Speed Controller (1 phase)

The rotating speed can be changed as you like. The motor comes with a controller of the socket type as a set and features high functions such as soft start, soft stop, electronics brake, and parallel driving.

Power : 6W,15W,25W,40W,60W,90W
Voltage symbol : A,C,D

Reversible Motor fors Socket type Speed Controller (1 phase)

Not only the rotating speed can be changed as you like but the rotating direction can in an instant.
The motor comes with a controller of the socket type as a set.

Power : 6W,15W,25W,40W
Voltage symbol : A,C,D

Motors with Electromagnetic Brake for Socket type Speed Controller (1 phase)

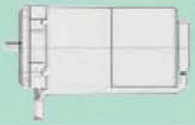

Not only the rota ting speed can be changed as you like but the rotating direction can in an instant.
Furthermore, it has a built-in electromagnetic brake and can store after stopping.

Capacity : 6W,15W,25W,40W
Power supply : A,C,D

Brake packs (1 phase)

Non contact type brake packs can bring the 1 phase induction motors and the reversible motors to a stop in an instance.
A motor itself can come to a stop for below 0.1 second.
It can not store the braking power. Extra power supply (DC12~14V 0.1A) is needed.

Unit Type Speed Controller

The control panel has the operation switch and the volume for speed control.
The controller can wire with the touch of a key and bring variable speed driving to fruition easily.

Socket Type Speed Controller

High functions speed controller
- Soft start & soft stop
- Electronics brake
- Parallel driving
- Instant stop with

Gear Head

Very reliable gear head with the involute gear. (selling separately)
Grease lubrication & ball bearing are applied to all models.
Reduction ratio : 3~200 (24 types)
Size : 60~90mmsg. (5 types)

Intermediate Gear Head

Intermediate gear head with higher reduction ratio than 200. (Option)
Reduction ratio : 10
Size : 60~90mm sg. (5 types)

Mounting Plate

The plate is used as an adopter when installing motor and gear motor to the parallel surface to the shaft direction. (Option)
Size : 60~90mm sg. (5 types)

When it comes to the right angle shaft, Hyponic!

High efficiency and strong with Hypoid gear.
Capacity : 15~90W
1-phase, 3-phase
Reduction ratio : 5~240
Induction
Reversible
With electromagnetic brake
Water-proof

Voltago symbol 1- phase motor								Voltago symbol 3-phsae motor			
A	100V(50Hz,60Hz) 110V(60Hz)	B	115V(60Hz)	C	200V(50Hz,60Hz) 220V(60Hz)	D	220V(50Hz) 240V(50Hz)	J	200V(50Hz,60Hz) 220V(50Hz,60Hz)	K	400V,440V,380V,415V (50Hz,60Hz)

Induction motors

∗Gear head and induction motor are sold separately.

Induction motors

- Most widely-used gear motors
- Used for constant-speed operation.
- Stop naturally using load torque (can be stopped quickly using separately-sold brake packs).
- Motor must be completely stopped before motor operation direction can be switched.
- Lead wires type.
- Time rating: Continuous

Astero™

Overview
Induction
Reversible
Electromagnetic brakes
Terminal boxes
Speed controller (Overview)
Unit type
Socket type
Speed controller (Induction)
Speed controller (Reversible)
Speed controller (Electro-magnetic brake)
Brake Packs
Options
Technical Information
Overview
6W
15W
25W
40W
60W
90W

Overview of induction motors (Standard specifications)

Table 1. Induction motor standard specifications

	Item	Induction motor standard specifications	
		Single-phase motor	3-phase motor
Motor	Capacity range	6 ~ 90 W 4 poles	25 ~ 90 W 4 poles
	Protection method Enclosure	6 ~ 40 W: IP23 Totally enclosed non ventilated type 60 W~: IP23 Totally enclosed fun cooled type	25 ~ 40 W: IP23 Totally enclosed non ventilated type 60 W~: IP23 Totally enclosed fun cooled type
	Power source	100V 50/60Hz, 110V 60Hz 115V 60Hz 200V 50/60Hz, 220V 60Hz 220～240V 50Hz	200V 50/60Hz, 220V 50/60Hz 380V 50/60Hz, 400V 50/60Hz, 415V 50/60Hz, 440V 50/60Hz
	Insulation	CE Marking, Class E (120˚C) UL Standard, Class A (105˚C)	CE Marking, Class E (120˚C) UL Standard, Class A (105˚C)
	Time rating	Continuous	Continuous
	Starting method	Condenser running	Direct start
	Lead wires (Number of lead wire)	6W : 4wires(220~240V/50Hz 3wires) 15~90W : 5wires(220~240V/50Hz 3wires) UL Style 3266 20AWG	3wires UL Style 3271 20 AWG
	Standards	CE Mark (Low Voltage Directive), UL Standard	
	Insulation resistance	At least 100 MΩ when measured with a 500 VDC megger between the motor coil and case at normal temperature and humidity after motor has reached rated operation.	
	Insulation withstand voltage	No malfunction when a 1500 V, 50/60 Hz current is applied between the motor coil and case for 1 minute at normal temperature and humidity after the motor has reached rated operation.	
	Temperature rise	The temperature rise value (ΔT) should be no more than 60˚C (no more than 45˚C for motors with fans) when measured by the prescribed method after the motor has reached the rated operation.	
	Overheating protector (TP)	Built-in thermal protector (auto-restore type) Release: 120 ±5˚C, Restore: 77 ±5˚C	
Gear	Lubrication method	Grease lubrication. Grease is loaded at shipment.	
Paint	Color	Astero silver	
Ambient conditions	Locations	Indoors (Minimal dust and humidity)	
	Temperature	-10 to 40˚C	
	Humidity	Under 85%	
	Elevation	Under 1,000 m	
	Atmosphere	Well ventilated location, free of corrosive gases, explosive gases, vapors and dust.	

Overview of induction motors (Selection procedure)

Determine equivalent transmitted torque (Te)

Determine service factor (SF)	See service factor table (p. 12)	$T\ell$ Actual torque transmitted by gear motor's output shaft (N·m)
Determine equivalent transmitted torque	$Te = T\ell \times S.F.$	Te : Equivalent transmitted torque (N·m)

Make initial model selection.

Determine reduction ratio	$i \fallingdotseq \frac{\text{Power frequency} \times 30}{\text{Output motor speed}}$	i : Reduction ratio
Check gear head allowable torque on relevant page	(P.14~P.24)	
Make initial gear head selection	Select model for which $Te \leqq T_{out.}$	Tout: Allowable torque of gear head (N·m)
Make initial motor selection	Select motor with same gear head size	Select the motor one size larger

Check motor's starting torque

Convert equivalent transmitted torque to motor shaft torque	$T_M = Te/(i \times \eta/100)$ $T_{MS} = T_M/0.8$	η : Gear head efficiency. See Table 5 on p. 180 T_M : Te converted to motor shaft torque (N·m) T_{MS} : Motor starting torque (N·m)
Check motor starting torque	T_{MS} must be no more than the starting torque value in the rating table	0.8 : Safety coefficient for ensuring starting torque

Check load inertia

Calculate load's moment of inertia	See p. 13 for how to make the calculation	
Convert it to motor shaft's moment of inertia	$JM = J/i^2$ (when reduction ratio is less than 50) $JM = J/50^2$ (when reduction ratio is 50 or more)	J : Load's moment of inertia (kg·m²) JM : Converted motor shaft's moment of inertia (kg·m²)
Check allowable load inertia	J_M must be no more than the allowable load's moment of inertia given on p. 12	

Check radial load.

Calculate radial load	$Pr = T\ell \times Cf \times S.F. / R$	Pr : Shaft radial load (N) Cf : Coupling factor SF : Service factor R : Pitch (radius of circle) of sprocket, gear, pulley or other drive component (m)
Check radial load	Pr must be no more than the output shaft's allowable radial load given in Table 7 on p. 181	Pro : Output shaft's allowable radial load (N)

Select model, dimensions.

Select model	Model specifications are given in the 'Model' column on the relevant page
Check dimensions in diagram	Dimensions are shown in the diagram on the relevant page

Overview
Induction
Reversible
Electromagnetic brakes
Terminal boxes
Speed controller (Overview)
Unit type
Socket type
Speed controller (Induction)
Speed controller (Reversible)
Speed controller (Electro-magnetic brake)
Brake Packs
Options
Technical Information
Overview
6W
15W
25W
40W
60W
90W

Overview of induction motors (Service factor)

Service factor (S. F.)

- Service factors are designed for 8 hours of per day with a uniform load.

Table 2. Service factor (S. F.)

Load condition \ Operation time	Up to 8 hours/day	Applications
Uniform load	1	Continuous load in one direction
Moderate shock load	1.5	Frequent changes of motor direction
Shock load	2	Instant changes of motor direction/stops

Shaft radial load and thrust load

- Calculate the shaft radial load when attaching a chain sprocket or pulley.
- The shaft radial load is calculated by the formula below. It must be smaller than the allowable radial load of the output shaft given table 7 on p.181.

$$\text{Shaft radial load (Pr)} = \frac{P_\ell \times Cf \times S.F.}{R} \text{[N]}$$

P_ℓ : Actual torque transmitted by slow speed shaft (N·m)
Cf : Load connection factor (see Table 3)
R : Pitch (radius of circle) of sprocket, gear, pulley or other drive component (m)

Table 3. Load connection factor (Cf)

Type of connection	Cf
Chain	1
Gear	1.25
Pulley	1.5

Load moment of inertia

- The converted motor shaft load moment of inertia is calculated by the following formula.

$J_M = J/i^2$ (when reduction ratio is less than 50)
$J_M = J/50^2$ (when reduction ratio is 50 or more)

i : Reduction ratio
J : Load moment of inertia (kg·m²)
J_M : Converted motor shaft load moment of inertia (kg·m²)

- Note that if the motor is used with a load moment of inertia exceeding the corresponding allowable valbe(given table4.), gears and bearings will quickly become damaged.

Table 4. Allowable values for converted motor shaft load moment of inertia (10^{-4} kg·m²)

Motor size	Motor power(W)	1ph	3ph
A6M06	6	0.05	–
A7M15	15	0.15	–
A8M25	25	0.30	0.30
A9M40	40	0.75	0.75
A9M60	60	1.00	1.00
A9M90	90	1.00	1.00

Overview of induction motors (Moment of inertia)

Calculation of moment of inertia J

(1) Moment of inertia of rotating motion

Rotating center meets gravity center		Rotating center dosen't meets gravity center	
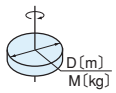	$J=\frac{1}{8}MD^2$ 〔kg・m²〕	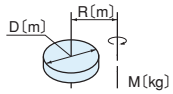	$J=\frac{M}{4}\left(\frac{1}{2}D^2+4R^2\right)$ 〔kg・m²〕
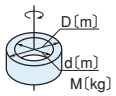	$J=\frac{1}{8}M(D^2+d^2)$ 〔kg・m²〕	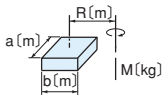	$J=\frac{M}{4}\left(\frac{a^2+b^2}{3}+4R^2\right)$ 〔kg・m²〕
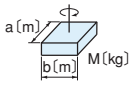	$J=\frac{1}{12}M(a^2+b^2)$ 〔kg・m²〕	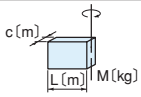	$J=\frac{1}{12}M(4L^2+C^2)$ 〔kg・m²〕

(2) Moment of inertia of rectilinear motion

General motion	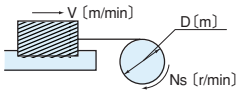	$J=\frac{M}{4}\left(\frac{V}{\pi \cdot Ns}\right)^2=\frac{M}{4}D^2$ 〔kg・m²〕
Horizontal motion by conveyor	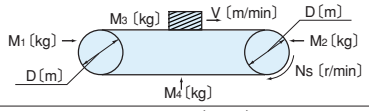	$J=\frac{M}{4}\left(\frac{M_1+M_2}{2}+M_3+M_4\right)\times D^2$ 〔kg・m²〕
Horizontal motion by screw	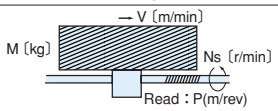	$J=\frac{M}{4}\left(\frac{V}{\pi \cdot Ns}\right)^2=\frac{M}{4}\left(\frac{P}{\pi}\right)^2$ 〔kg・m²〕
Vertical motion by winch	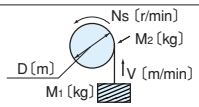	$J=\frac{M_1D^2}{4}+\frac{1}{8}M_2D^2$ 〔kg・m²〕

(3) Calculation of moment of inertia at defferent rotating speeds

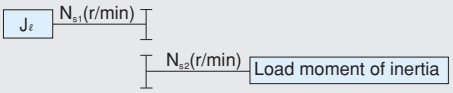

$$J_\ell=\left(\frac{N_{s2}}{N_{s1}}\right)^2 J$$

6W □60mm Induction motors

Motor specification table

Frame size mm sq	Motor Type	Poles	Output (W)	Voltage (V)	Frequency (Hz)	Time ratiang	Rating torque: Current (A)	Rating torque: Output speed (r/min)	Rating torque: Torque (N·m)	Rating torque: Torque (Kgf·cm)	Starting torque (N·m)	Starting torque (Kgf·cm)	Over-heating pro-tection	Standard	Condenser (μF)
60	A6M06A	4	6	1ph100	50	Cont.	0.21	1200	0.050	0.50	0.045	0.45	ZP	CE	2. 5
					60		0.19	1500	0.042	0.42					
				1ph110	60		0.20	1550	0.040	0.40	0.055	0.55			
	A6M06B	4	6	1ph115	60	Cont.	0.19	1500	0.042	0.42	0.055	0.55	ZP	UL/CE	2.0
	A6M06C	4	6	1ph200	50	Cont.	0.10	1200	0.050	0.50	0.045	0.45	ZP	CE	0. 7
					60			1500	0.042	0.42					
				1ph220	60		0.10	1550	0.040	0.40	0.055	0.55			
	A6M06D	4	6	1ph220	50	Cont.	0.08	1200	0.050	0.50	0.050	0.50	ZP	CE	0.6
				1ph240			0.09		0.053	0.53	0.055	0.55			

- The capacitor condenser depends on the voltage in use. Be sure to use the correct capacity for the voltage.
- The use of an incorrect condenser capacity can cause malfunctions. To ensure that you order the correct model, check the voltage in use before ordering.
- All the motor types in the table above are CE Mark and impedance-protected (ZP) types.

Gear head rating torque table

Gear head type: G6□D

Frequency	Reduction ratio		3	3.6	5	6	7.5	9	10	12.5	15	18	20	25
50Hz	Ouput speed	r/min	500	417	300	250	200	166	150	120	100	83	75	60
	Rating torque	N·m	0.13	0.15	0.21	0.26	0.31	0.38	0.42	0.53	0.63	0.76	0.76	0.95
		Kgf·cm	1.3	1.5	2.1	2.6	3.2	3.9	4.3	5.4	6.4	7.7	7.7	9.7
60Hz	Ouput speed	r/min	600	500	360	300	240	200	180	144	120	100	90	72
	Rating torque	N·m	0.10	0.13	0.17	0.21	0.26	0.30	0.34	0.43	0.51	0.62	0.62	0.76
		Kgf·cm	1.0	1.3	1.7	2.1	2.6	3.1	3.5	4.4	5.2	6.3	6.3	7.8

Gear head type: G6□D

Frequency	Reduction ratio		30	36	40	50	60	75	90	100	120	150	180	200
50Hz	Ouput speed	r/min	50	41	37	30	25	20	16	15	12	10	8	7.5
	Rating torque	N·m	1.14	1.36	1.52	1.72	2.06	2.57	2.94	2.94	2.94	2.94	2.94	2.94
		Kgf·cm	11.6	13.9	15.5	17.5	21.0	26.2	30.0	30.0	30.0	30.0	30.0	30.0
60Hz	Ouput speed	r/min	60	50	45	36	30	24	20	18	15	12	10	9
	Rating torque	N·m	0.92	1.11	1.24	1.39	1.67	2.09	2.50	2.78	2.94	2.94	2.94	2.94
		Kgf·cm	9.4	11.3	12.6	14.2	17.0	21.3	25.5	28.4	30.0	30.0	30.0	30.0

- □ in gear head type names indicates the reduction ratio.
- Intermediate gear heads are for use with gear heads having a reduction ratio of 30 or more. When an intermediate gear head is used, the rating torque is 1.96 N•m (20 kgf•cm) for a reduction ratio between 30 and 40, and 2.94 N•m (30 kgf•cm) for a reduction ratio of 50 or more.
- Rotation direction in shaded boxes are in the same direction as the motor rotation. Direction in unshaded boxes are in the opposite direction as the motor rotation.
- Rotation speed don't include motor slippage. The actual values will be between 2 and 20% lower, depending on the load.

Condenser

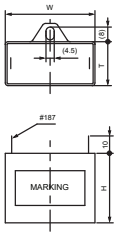

Motor type	Voltage (V)	Capacity (μF)	Condenser type	W (mm)	T (mm)	H (mm)
A6M06A	1ph100	2.5	DMF-25255	36	16	25
	1ph110					
A6M06B	1ph115	2.0	DMF-25205	36	16	25
A6M06C	1ph200	0.7	DMF-45704	36	16	25
	1ph220					
A6M06D	1ph220	0.6	DMF-45604	36	16	25
	1ph240					

BIBUS
BIBUS s.r.o.
+420 547 125 300
www.bibus.cz

Dimensions

Gear motors

Motor type ：A6M06□

Gear head type ：G6□D

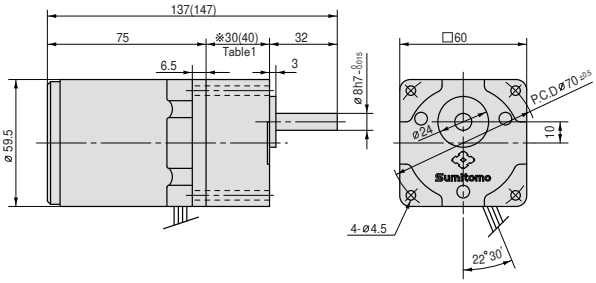

Gear head output shaft detail

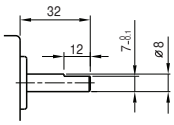

Motor

Type：A6M06□

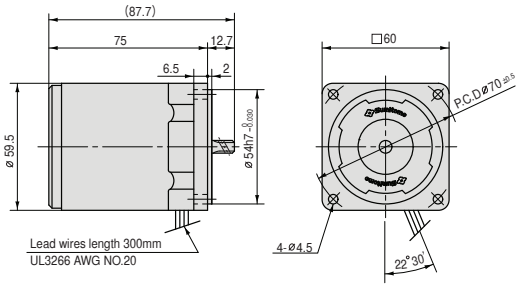

Table1. Gear head length

Gear head size	Length(mm)
G63D～G618D	30
G620D～G6200D	40

Intermediate gear head

Type: G6XH10

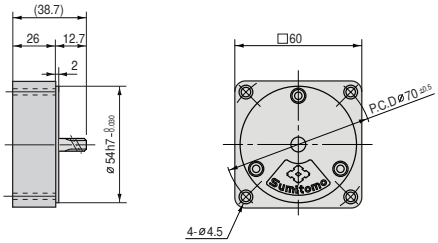

Table2. Weight

		Weight(kg)
Motor		0.70
Gear head	G63D ～G618D	0.24
	G620D ～G640D	0.30
	G650D ～G6200D	0.33
Intermediate gear head		0.18

Wiring diagram

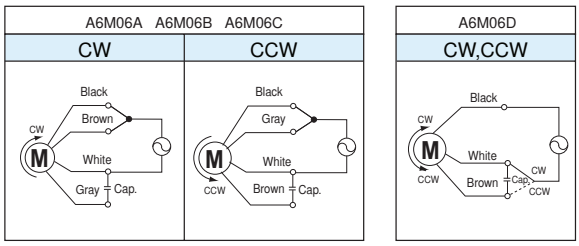

- Rotation directions are the directions as viewed from the end of the motor shaft.
- The motor must be completely stopped before its operation direction can be switched.
- If you try to switch the rotation direction while the motor is operating, the attempt may be unsuccessful, or may take some time

Related information

Selection procedure: p.11

Options: p.169

Standard specifications: p.10

Technical information: p.175

15W □70mm Induction motors

Motor specification table

Frame size mm sq	Motor Type	Poles	Output (W)	Voltage (V)	Frequency (Hz)	Time ratiang	Rating torque: Current (A)	Rating torque: Output speed (r/min)	Rating torque: Torque (N·m)	Rating torque: Torque (Kgf·cm)	Starting torque (N·m)	Starting torque (Kgf·cm)	Over-heating pro-tection	Standard	Condenser (μF)
70	A7M15A	4	15	1ph100	50	Cont.	0.35	1250	0.120	1.20	0.090	0.90	TP	CE	5.0
					60		0.34	1550	0.100	1.00					
				1ph110	60		0.34	1600	0.100	1.00	0.110	1.10			
	A7M15B	4	15	1ph115	60	Cont.	0.30	1600	0.100	1.00	0.090	0.90	TP	UL/CE	4.0
	A7M15C	4	15	1ph200	50	Cont.	0.19	1200	0.125	1.25	0.090	0.90	TP	CE	1. 2
					60		0.18	1500	0.120	1.20					
				1ph220	60		0.19	1550	0.110	1.10	0.110	1.10			
	A7M15D	4	15	1ph220	50	Cont.	0.16	1200	0.125	1.25	0.075	0.75	TP	CE	0.9
				1ph240			0.18		0.135	1.35	0.090	0.90			

- The capacitor condenser depends on the voltage in use. Be sure to use the correct capacity for the voltage.
- The use of an incorrect condenser capacity can cause malfunctions. To ensure that you order the correct model, check the voltage in use before ordering.
- All the motor types in the table above are CE Mark and thermal protected (TP) is built in the coil.

Gear head rating torque table

Gear head type: G7□K

Frequency	Reduction ratio		3	3.6	5	6	7.5	9	10	12.5	15	18	20	25
50Hz	Ouput speed	r/min	500	417	300	250	200	166	150	120	100	83	75	60
	Rating torque	N·m	0.31	0.38	0.53	0.64	0.79	0.95	1.06	1.32	1.59	1.90	1.90	2.37
		Kgf·cm	3.2	3.9	5.4	6.5	8.1	9.7	10.8	13.5	16.2	19.4	19.4	24.2
60Hz	Ouput speed	r/min	600	500	360	300	240	200	180	144	120	100	90	72
	Rating torque	N·m	0.29	0.35	0.50	0.60	0.75	0.89	0.99	1.25	1.49	1.79	1.79	2.24
		Kgf·cm	3.0	3.6	5.1	6.1	7.6	9.1	10.1	12.7	15.2	18.2	18.2	22.8

Gear head type: G7□K

Frequency	Reduction ratio		30	36	40	50	60	75	90	100	120	150	180	200
50Hz	Ouput speed	r/min	50	41	37	30	25	20	16	15	12	10	8	7.5
	Rating torque	N·m	2.85	3.42	3.81	4.28	4.90	4.90	4.90	4.90	4.90	4.90	4.90	4.90
		Kgf·cm	29.1	34.9	38.8	43.6	50.0	50.0	50.0	50.0	50.0	50.0	50.0	50.0
60Hz	Ouput speed	r/min	60	50	45	36	30	24	20	18	15	12	10	9
	Rating torque	N·m	2.68	3.22	3.58	4.02	4.83	4.90	4.90	4.90	4.90	4.90	4.90	4.90
		Kgf·cm	27.3	32.8	36.5	41.0	49.2	50.0	50.0	50.0	50.0	50.0	50.0	50.0

- □ in gear head type names indicates the reduction ratio.
- Intermediate gear heads are for use with gear heads having a reduction ratio of 25 or more. When an intermediate gear head is used, the rating torque is 3.92 N•m (40 kgf•cm) for a reduction ratio between 25 and 40, and 4.90 N•m (50 kgf•cm) for a reduction ratio of 50 or more.
- Rotation direction in shaded boxes are in the same direction as the motor rotation. Direction in unshaded boxes are in the opposite direction as the motor rotation.
- Rotation speed don't include motor slippage. The actual values will be between 2 and 20% lower, depending on the load.

Condenser

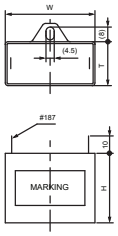

Motor type	Voltage (V)	Capacity (μF)	Condenser type	W (mm)	T (mm)	H (mm)
A7M15A	1ph100 1ph110	5.0	DMF-25505	38	19	29
A7M15B	1ph115	4.0	DMF-25405	38	19	29
A7M15C	1ph200 1ph220	1.2	DMF-45125	36	16	25
A7M15D	1ph220 1ph240	0.9	DMF-45904	36	16	25

Dimensions

Gear motors

Motor type ：A7M15□

Gear head type ：G7□K

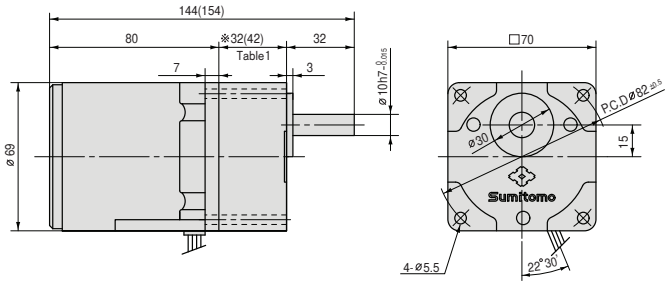

Gear head output shaft detail

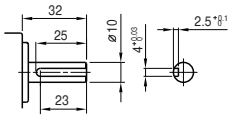

key size

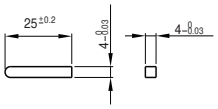

Motor

Type : A7M15□

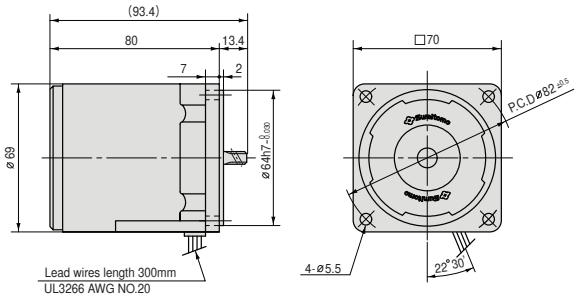

Intermediate gear head

Type: G7XH10

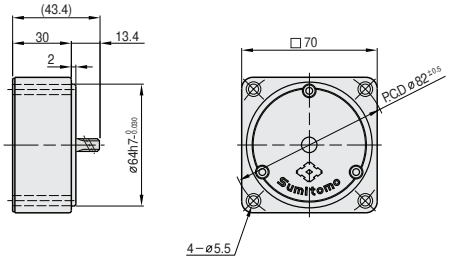

Table1. Gear head length

Gear head size	Length(mm)
G73K～G718K	32
G720K～G7200K	42

Table2. Weight

		Weight(kg)
Motor		1.04
Gear head	G73K ～G718K	0.38
	G720K ～G740K	0.47
	G750K ～G7200K	0.52
Intermediate gear head		0.32

Wiring diagram

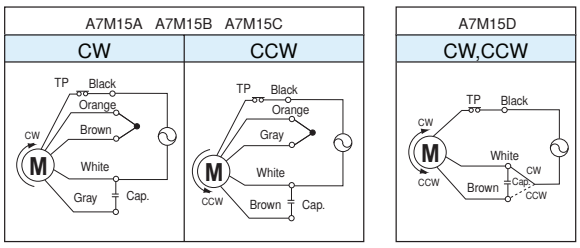

- Rotation directions are the directions as viewed from the end of the motor shaft.
- The motor must be completely stopped before its operation direction can be switched.
- If you try to switch the rotation direction while the motor is operating, the attempt may be unsuccessful, or may take some time

Related information

Selection procedure: p.11

Options: p.169

Standard specifications: p.10

Technical information: p.175

25W □80mm Induction motors

Motor specification table

Frame size mm sq	Motor Type	Poles	Output	Voltage	Frequency	Time ratiang	Rating torque Current	Rating torque Output speed	Rating torque Torque		Starting torque		Over-heating pro-tection	Standard	Condenser
			(W)	(V)	(Hz)		(A)	(r/min)	(N·m)	(Kgf·cm)	(N·m)	(Kgf·cm)			(μF)
80	A8M25A	4	25	1ph100	50	Cont.	0.57	1250	0.200	2.00	0.145	1.45	TP	CE	6.0
					60		0.52	1550	0.165	1.65					
				1ph110	60		0.51	1600	0.160	1.60	0.180	1.80			
	A8M25B	4	25	1ph115	60	Cont.	0.59	1500	0.170	1.70	0.120	1.20	TP	UL/CE	4.5
	A8M25C	4	25	1ph200	50	Cont.	0.30	1250	0.200	2.00	0.145	1.45	TP	CE	1.5
					60		0.29	1500	0.170	1.70					
				1ph220	60		0.23	1550	0.165	1.65	0.180	1.80			
	A8M25D	4	25	1ph220	50	Cont.	0.23	1200	0.210	2.10	0.110	1.10	TP	CE	1.3
				1ph240			0.25		0.220	2.20	0.130	1.30			
	A8M25J	4	25	3ph200	50	Cont.	0.25	1300	0.195	1.95	0.340	3.40	TP	CE	–
					60		0.22	1550	0.165	1.65	0.270	2.70			
				3ph220	50		0.26	1350	0.190	1.90	0.410	4.10			
					60		0.23	1600	0.160	1.60	0.320	3.20			
	A8M25K	4	25	3ph380	50	Cont.	0.14	1250	0.200	2.00	0.315	3.15	TP	CE	–
					60		0.12	1500	0.170	1.70	0.250	2.50			
				3ph400	50	Cont.	0.14	1250	0.210	2.10	0.350	3.50	TP	CE	
					60		0.12	1500	0.180	1.80	0.275	2.75			
				3ph415	50	Cont.	0.15	1300	0.195	1.95	0.375	3.75	TP	CE	
					60		0.13	1550	0.165	1.65	0.300	3.00			
				3ph440	50	Cont.	0.15	1300	0.210	2.10	0.440	4.40	TP	CE	
					60		0.13	1550	0.180	1.80	0.340	3.40			

- The capacitor condenser depends on the voltage in use. Be sure to use the correct capacity for the voltage.
- The use of an incorrect condenser capacity can cause malfunctions. To ensure that you order the correct model, check the voltage in use before ordering.
- All the motor types in the table above are CE Mark and thermal protected (TP) is built in the coil.

Gear head rating torque table

Gear head type: G8□K

Frequency	Reduction ratio		3	3.6	5	6	7.5	9	10	12.5	15	18	20	25
50Hz	Ouput speed	r/min	500	417	300	250	200	166	150	120	100	83	75	60
	Rating torque	N·m	0.52	0.63	0.87	1.05	1.31	1.57	1.74	2.19	2.62	3.15	3.15	3.94
		Kgf·cm	5.3	6.4	8.9	10.7	13.4	16.0	17.8	22.3	26.7	32.1	32.1	40.2
60Hz	Ouput speed	r/min	600	500	360	300	240	200	180	144	120	100	90	72
	Rating torque	N·m	0.43	0.51	0.72	0.85	1.07	1.28	1.43	1.78	2.15	2.57	2.58	3.22
		Kgf·cm	4.4	5.2	7.3	8.7	10.9	13.1	14.6	18.2	21.9	26.2	26.3	32.9

Gear head type: G8□K

Frequency	Reduction ratio		30	36	40	50	60	75	90	100	120	150	180	200
50Hz	Ouput speed	r/min	50	41	37	30	25	20	16	15	12	10	8	7.5
	Rating torque	N·m	4.72	5.66	6.29	7.12	7.84	7.84	7.84	7.84	7.84	7.84	7.84	7.84
		Kgf·cm	48.2	57.8	64.2	72.6	80.0	80.0	80.0	80.0	80.0	80.0	80.0	80.0
60Hz	Ouput speed	r/min	60	50	45	36	30	24	20	18	15	12	10	9
	Rating torque	N·m	3.86	4.64	5.16	5.82	6.99	7.84	7.84	7.84	7.84	7.84	7.84	7.84
		Kgf·cm	39.4	47.3	52.6	59.4	71.3	80.0	80.0	80.0	80.0	80.0	80.0	80.0

- □ in gear head type names indicates the reduction ratio.
- Intermediate gear heads are for use with gear heads having a reduction ratio of 25 or more. When an intermediate gear head is used, the rating torque is 5.88 N•m (60 kgf•cm) for a reduction ratio between 25 and 40, and 7.84 N•m (80 kgf•cm) for a reduction ratio of 50 or more.
- Rotation direction in shaded boxes are in the same direction as the motor rotation. Direction in unshaded boxes are in the opposite direction as the motor rotation.
- Rotation speed don't include motor slippage. The actual values will be between 2 and 20% lower, depending on the load.

Condenser

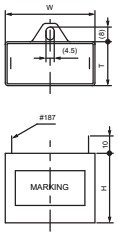

Motor type	Voltage	Capacity	Condenser type	W	T	H
	(V)	(μV)		(mm)	(mm)	(mm)
A8M25A	1ph100 1ph110	6.0	DMF-25605	38	19	29
A8M25B	1ph115	4.5	DMF-25455	38	19	29
A8M25C	1ph200 1ph220	1.5	DMF-45155	36	16	25
A8M25D	1ph220 1ph240	1.3	DMF-45135	36	16	25

Dimensions

Gear motors

Motor type ：A8M25□

Gear head type ：G8□K

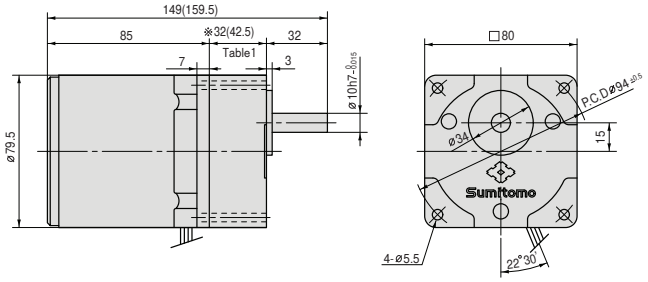

Gear head output shaft detail

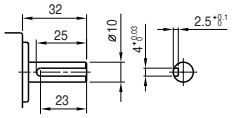

key size

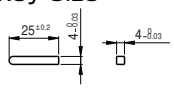

Motor

Type : A8M25□

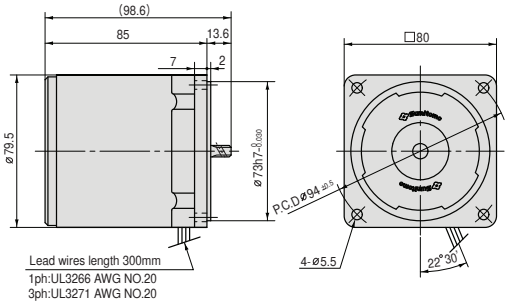

Table1. Gear head length

Gear head size	Length (mm)
G83K ～G818K	32
G820K ～G8200K	42.5

Intermediate gear head

Type: G8XH10

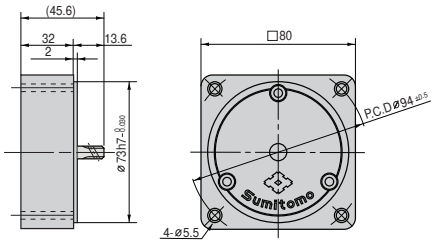

Table2. Weight

		Weight(kg)
Motor		1.46
Gear head	G83K ～G818K	0.43
	G820K ～G840K	0.57
	G850K ～G8200K	0.61
Intermediate gear head		0.43

Wiring diagram

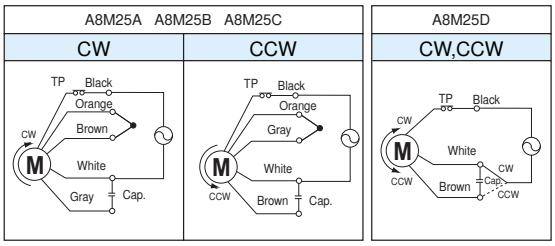

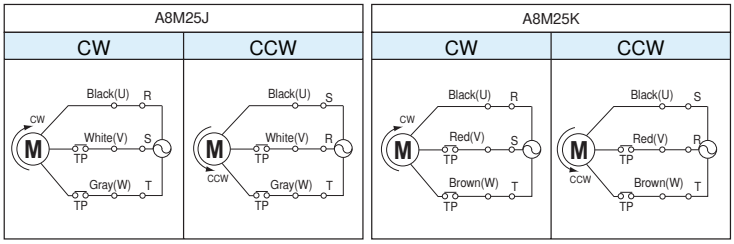

- Rotation directions are the directions as viewed from the end of the motor shaft.
- The motor must be completely stopped before its operation direction can be switched.
- If you try to switch the rotation direction while the motor is operating, the attempt may be unsuccessful, or may take some time

Related information

Selection procedure: p.11

Options: p.169

Standard specifications: p.10

Technical information: p.175

40W □90mm

Induction motors

Motor specification table

Frame size mm sq	Motor Type	Poles	Output (W)	Voltage (V)	Frequency (Hz)	Time ratiang	Rating torque: Current (A)	Rating torque: Output speed (r/min)	Rating torque: Torque (N·m)	Rating torque: Torque (Kgf·cm)	Starting torque (N·m)	Starting torque (Kgf·cm)	Over-heating pro-tection	Standard	Condenser (μF)
90	A9M40A	4	40	1ph100	50	Cont.	0.80	1300	0.310	3.10	0.240	2.40	TP	CE	10.0
					60		0.85	1550	0.260	2.60					
				1ph110	60		0.82	1600	0.250	2.50	0.290	2.90			
	A9M40B	4	40	1ph115	60	Cont.	0.91	1550	0.260	2.60	0.240	2.40	TP	UL/CE	8.0
	A9M40C	4	40	1ph200	50	Cont.	0.41	1300	0.310	3.10	0.240	2.40	TP	CE	2.5
					60		0.43	1550	0.260	2.60					
				1ph220	60		0.41	1600	0.250	2.50	0.290	2.90			
	A9M40D	4	40	1ph220	50	Cont.	0.34	1250	0.315	3.15	0.180	1.80	TP	CE	2.0
				1ph240			0.37		0.335	3.35	0.210	2.10			
	A9M40J	4	40	3ph200	50	Cont.	0.30	1300	0.310	3.10	0.490	4.90	TP	CE	–
					60		0.28	1550	0.260	2.60	0.370	3.70			
				3ph220	50		0.30	1350	0.300	3.00	0.590	5.90			
					60		0.28	1600	0.250	2.50	0.450	4.50			
	A9M40K	4	40	3ph380	50	Cont.	0.21	1300	0.320	3.20	0.630	6.30	TP	CE	–
					60		0.19	1550	0.270	2.70	0.485	4.85			
				3ph400	50	Cont.	0.21	1300	0.330	3.30	0.690	6.90	TP	CE	
					60		0.19	1550	0.280	2.80	0.525	5.25			
				3ph415	50	Cont.	0.21	1350	0.310	3.10	0.730	7.30	TP	CE	
					60		0.19	1600	0.260	2.60	0.570	5.70			
				3ph440	50	Cont.	0.21	1350	0.320	3.20	0.820	8.20	TP	CE	
					60		0.19	1600	0.270	2.70	0.630	6.30			

- The capacitor condenser depends on the voltage in use. Be sure to use the correct capacity for the voltage.
- The use of an incorrect condenser capacity can cause malfunctions. To ensure that you order the correct model, check the voltage in use before ordering.
- All the motor types in the table above are CE Mark and thermal protected (TP) is built in the coil.

Gear head rating torque table

Gear head type: G9A□K

Frequency	Reduction ratio		3	3.6	5	6	7.5	9	10	12.5	15	18	20	25
50Hz	Ouput speed	r/min	500	417	300	250	200	166	150	120	100	83	75	60
	Rating torque	N·m	0.81	0.97	1.35	1.62	2.03	2.43	2.70	3.37	4.05	4.86	4.86	6.09
		Kgf·cm	8.3	9.9	13.8	16.5	20.7	24.8	27.5	34.4	41.3	49.6	49.6	62.1
60Hz	Ouput speed	r/min	600	500	360	300	240	200	180	144	120	100	90	72
	Rating torque	N·m	0.67	0.80	1.11	1.33	1.67	2.00	2.23	2.78	3.33	4.00	4.01	5.01
		Kgf·cm	6.8	8.2	11.3	13.6	17.0	20.4	22.7	28.4	34.0	40.8	40.9	51.1

Gear head type: G9A□K

Frequency	Reduction ratio		30	36	40	50	60	75	90	100	120	150	180	200
50Hz	Ouput speed	r/min	50	41	37	30	25	20	16	15	12	10	8	7.5
	Rating torque	N·m	7.30	8.76	9.73	9.80	9.80	9.80	9.80	9.80	9.80	9.80	9.80	9.80
		Kgf·cm	74.5	89.4	99.3	100.0	100.0	100.0	100.0	100.0	100.0	100.0	100.0	100.0
60Hz	Ouput speed	r/min	60	50	45	36	30	24	20	18	15	12	10	9
	Rating torque	N·m	6.01	7.21	8.02	9.80	9.80	9.80	9.80	9.80	9.80	9.80	9.80	9.80
		Kgf·cm	61.3	73.6	81.8	100.0	100.0	100.0	100.0	100.0	100.0	100.0	100.0	100.0

- □ in gear head type names indicates the reduction ratio.
- When an intermediate gear head is used, the rating torque is 9.80N · m(100kgf · cm).
- Rotation direction in shaded boxes are in the same direction as the motor rotation. Direction in unshaded boxes are in the opposite direction as the motor rotation.
- Rotation speed don't include motor slippage. The actual values will be between 2 and 20% lower, depending on the load.

Condenser

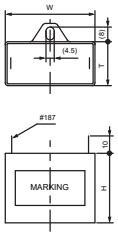

Motor type	Voltage (V)	Capacity (μF)	Condenser type	W (mm)	T (mm)	H (mm)
A9M40A	1ph100 1ph110	10.0	DMF-251006	47	19	28
A9M40B	1ph115	8.0	DMF-25805	48	21	33
A9M40C	1ph200 1ph220	2.5	DMF-45255	47	19	28
A9M40D	1ph220 1ph240	2.0	DMF-45205	38	19	29

Dimensions

Gear motors

Motor type ：A9M40□

Gear head type ：G9A□K

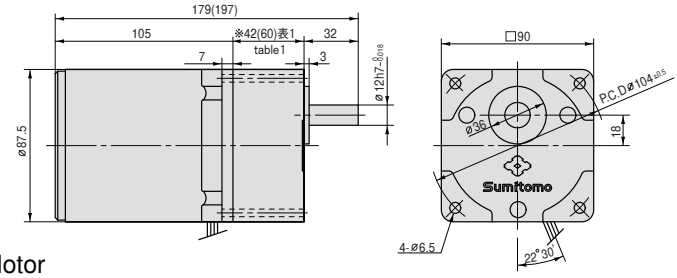

Gear head output shaft detail

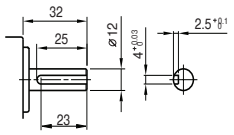

Motor

Type : A9M40□

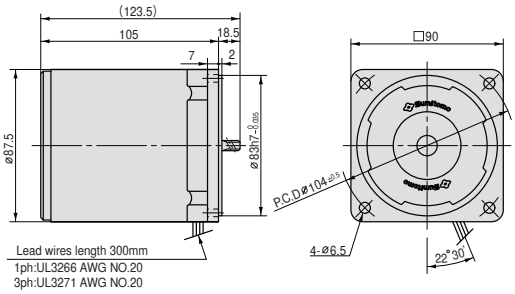

key size

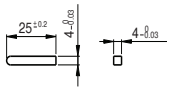

Table1. Gear head lenght

Gear head size	Length(mm)
G9A3K～G9A18K	42
G9A20K～G9A200K	60

Intermediate gear head

Type: G9AXH10

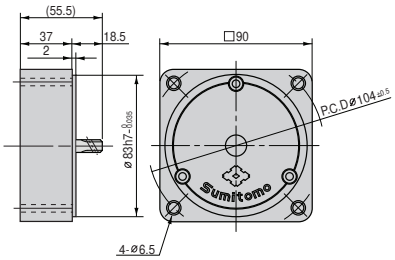

Table2. Weight

		Weight(kg)
Motor		2.30
Gear head	G9A3K ～G9A18K	0.73
	G9A20K ～G9A40K	1.03
	G9A50K ～G9A200K	1.13
Intermediate gear head		0.60

Wiring diagram

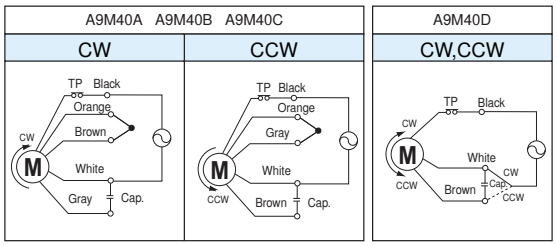

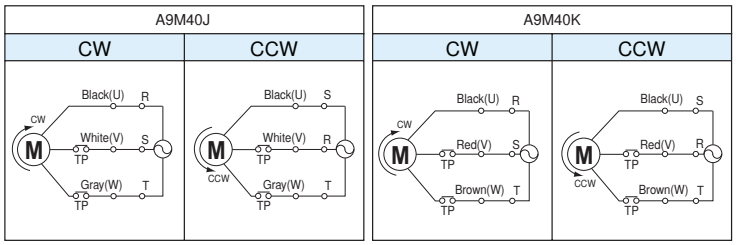

- Rotation directions are the directions as viewed from the end of the motor shaft.
- The motor must be completely stopped before its operation direction can be switched.
- If you try to switch the rotation direction while the motor is operating, the attempt may be unsuccessful, or may take some time

Related information

Selection procedure: p.31

Options: p.169

Standard specifications: p.28

Technical information: p.175

60W □90mm

Induction motors

Motor specification table

Frame size mm sq	Motor Type	Poles	Output (W)	Voltage (V)	Frequency (Hz)	Time ratiang	Rating torque: Current (A)	Rating torque: Output speed (r/min)	Rating torque: Torque (N·m)	Rating torque: Torque (Kgf·cm)	Starting torque (N·m)	Starting torque (Kgf·cm)	Over-heating pro-tection	Standard	Condenser (μF)
90	A9M60AH	4	60	1ph100	50	Cont.	1.26	1300	0.460	4.60	0.340	3.40	TP	CE	15.0
					60		1.37	1550	0.390	3.90					
				1ph110	60		1.35	1600	0.380	3.80	0.480	4.80			
	A9M60BH	4	60	1ph115	60	Cont.	1.20	1550	0.400	4.00	0.320	3.20	TP	UL/CE	12.0
	A9M60CH	4	60	1ph200	50	Cont.	0.65	1300	0.470	4.70	0.385	3.85	TP	CE	4. 0
					60		0.70	1550	0.400	4.00					
				1ph220	60		0.68	1600	0.390	3.90	0.480	4.80			
	A9M60DH	4	60	1ph220	50	Cont.	0.47	1300	0.460	4.60	0.320	3.20	TP	CE	3.5
				1ph240			0.50		0.490	4.90	0.390	3.90			
	A9M60JH	4	60	3ph200	50	Cont.	0.46	1300	0.460	4.60	0.710	7.10	TP	CE	–
					60		0.42	1550	0.390	3.90	0.540	5.40			
				3ph220	50	Cont.	0.46	1350	0.440	4.40	0.860	8.60			
					60		0.41	1600	0.390	3.90	0.680	6.80			
	A9M60KH	4	60	3ph380	50	Cont.	0.27	1300	0.460	4.60	0.825	8.25	TP	CE	–
					60		0.24	1550	0.390	3.90	0.650	6.50			
				3ph400	50	Cont.	0.29	1300	0.470	4.70	0.930	9.30	TP	CE	
					60		0.25	1550	0.400	4.00	0.735	7.35			
				3ph415	50	Cont.	0.27	1350	0.460	4.60	0.995	9.95	TP	CE	
					60		0.23	1600	0.380	3.80	0.750	7.50			
				3ph440	50	Cont.	0.31	1350	0.470	4.70	1.075	10.75	TP	CE	
					60		0.25	1600	0.390	3.90	0.840	8.40			

- The capacitor condenser depends on the voltage in use. Be sure to use the correct capacity for the voltage.
- The use of an incorrect condenser capacity can cause malfunctions. To ensure that you order the correct model, check the voltage in use before ordering.
- All the motor types in the table above are CE Mark and thermal protected (TP) is built in the coil.

Gear head rating torque table

Gear head type: G 9 B□K H

Frequency	Reduction ratio		3	3.6	5	6	7.5	9	10	12.5	15	18	20	25
50Hz	Ouput speed	r/min	500	417	300	250	200	166	150	120	100	83	75	60
	Rating torque	N·m	1.20	1.43	1.99	2.38	2.99	3.58	3.97	4.47	5.37	6.44	7.15	8.09
		Kgf·cm	12.2	14.6	20.3	24.3	30.4	36.5	40.5	45.6	54.8	65.7	73.0	82.5
60Hz	Ouput speed	r/min	600	500	360	300	240	200	180	144	120	100	90	72
	Rating torque	N·m	0.95	1.15	1.59	1.90	2.38	2.86	3.18	3.58	4.29	5.16	5.72	6.47
		Kgf·cm	9.7	11.7	16.2	19.4	24.3	29.2	32.4	36.5	43.8	52.6	58.4	66.0

Gear head type: G 9 B□K H

Frequency	Reduction ratio		30	36	40	50	60	75	90	100	120	150	180	200
50Hz	Ouput speed	r/min	50	41	37	30	25	20	16	15	12	10	8	7.5
	Rating torque	N·m	9.70	11.66	12.94	16.17	19.40	19.60	19.60	19.60	19.60	19.60	19.60	19.60
		Kgf·cm	99.0	119.0	132.0	165.0	198.0	200.0	200.0	200.0	200.0	200.0	200.0	200.0
60Hz	Ouput speed	r/min	60	50	45	36	30	24	20	18	15	12	10	9
	Rating torque	N·m	7.76	9.31	10.39	12.94	15.48	17.35	19.60	19.60	19.60	19.60	19.60	19.60
		Kgf·cm	79.2	95.0	106.0	132.0	158.0	177.0	200.0	200.0	200.0	200.0	200.0	200.0

- □ in gear head type names indicates the reduction ratio.
- When an intermediate gear head is used, the rating torgue is 19.60N · m(200kgf · cm).
- Rotation direction in shaded boxes are in the same direction as the motor rotation. Direction in unshaded boxes are in the opposite direction as the motor rotation.
- Rotation speed don't include motor slippage. The actual values will be between 2 and 20% lower, depending on the load.

Condenser

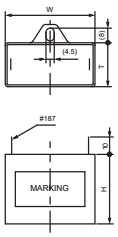

Motor type	Voltage (V)	Capacity (μF)	Condenser type	W (mm)	T (mm)	H (mm)
A9M60AH	1ph100	15.0	DMF-251506	50	25	40
	1ph110					
A9M60BH	1ph115	12.0	DMF-251206	48	21	33
A9M60CH	1ph200	4.0	DMF-45405	48	21	33
	1ph220					
A9M60DH	1ph220	3.5	DMF-45355	48	21	33
	1ph240					

Dimensions

Gear motors

Motor type : A9M60□H

Gear head type : G9B□KH

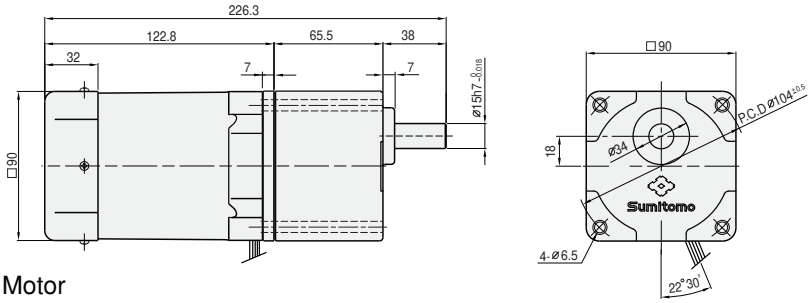

Gear head output shaft detail

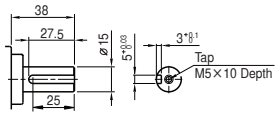

Motor

Type : A9M60□H

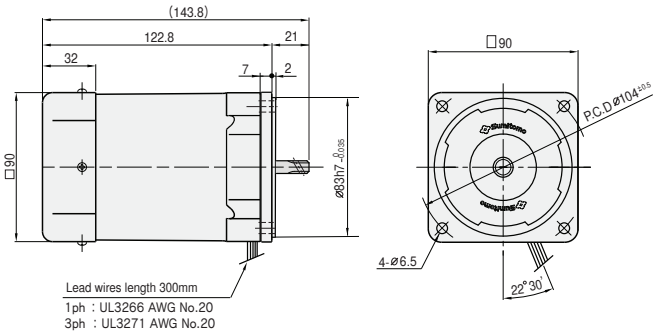

key size

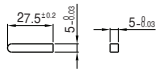

Intermediate gear head

Type: G9BXH10H

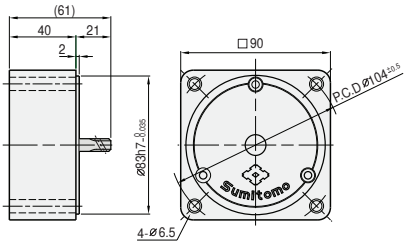

Table1. Weight

		Weight(kg)
Motor		2.44
Gear head	G9B3KH ～ G9B10KH	1.21
	G9B12.5KH ～ G9B20KH	1.30
	G9B25KH ～ G9B60KH	1.40
	G9B75KH ～ G9B200KH	1.45
Intermediate gear head		0.65

Wiring diagram

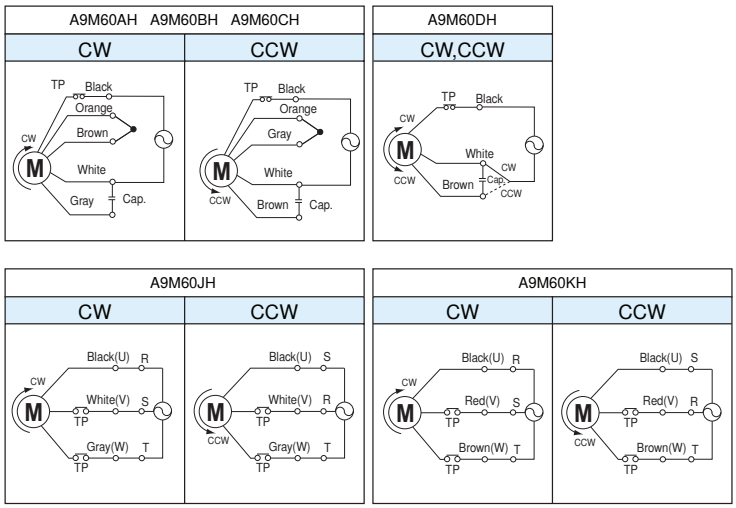

- Rotation directions are the directions as viewed from the end of the motor shaft.
- The motor must be completely stopped before its operation direction can be switched.
- If you try to switch the rotation direction while the motor is operating, the attempt may be unsuccessful, or may take some time

Related information

Selection procedure: p.11

Options: p.169

Standard specifications: p.10

Technical information: p.175

90W □90mm Induction motors

Motor specification table

Frame size mm sq	Motor Type	Poles	Output (W)	Voltage (V)	Frequency (Hz)	Time ratiang	Rating torque: Current (A)	Rating torque: Output speed (r/min)	Rating torque: Torque (N·m)	Rating torque: Torque (Kgf·cm)	Starting torque (N·m)	Starting torque (Kgf·cm)	Over-heating pro-tection	Standard	Condenser (μF)
90	A9M90AH	4	90	1ph100	50	Cont.	1.80	1300	0.690	6.90	0.500	5.00	TP	CE	25.0
					60		2.00	1550	0.580	5.80					
				1ph110	60		2.00	1600	0.560	5.60	0.570	5.70			
	A9M90BH	4	90	1ph115	60	Cont.	1.80	1550	0.600	6.00	0.500	5.00	TP	UL/CE	20.0
	A9M90CH	4	90	1ph200	50	Cont.	0.90	1300	0.690	6.90	0.500	5.00	TP	CE	6.0
					60		1.00	1550	0.580	5.80					
				1ph220	60		1.00	1600	0.560	5.60	0.570	5.70			
	A9M90DH	4	90	1ph220	50	Cont.	0.68	1300	0.690	6.90	0.480	4.80	TP	CE	5.0
				1ph240			0.72		0.720	7.20	0.520	5.20			
	A9M90JH	4	90	3ph200	50	Cont.	0.63	1300	0.690	6.90	1.010	10.10	TP	CE	–
					60		0.60	1550	0.600	6.00	0.760	7.60			
				3ph220	50	Cont.	0.63	1350	0.680	6.80	1.250	12.50			
					60		0.60	1600	0.570	5.70	0.960	9.60			
	A9M90KH	4	90	3ph380	50	Cont.	0.32	1300	0.680	6.80	1.055	10.55	TP	CE	–
					60		0.30	1550	0.570	5.70	0.820	8.20			
				3ph400	50	Cont.	0.35	1300	0.690	6.90	1.170	11.70	TP	CE	
					60		0.32	1550	0.580	5.80	0.890	8.90			
				3ph415	50	Cont.	0.33	1350	0.680	6.80	1.200	12.00	TP	CE	
					60		0.29	1600	0.570	5.70	0.950	9.50			
				3ph440	50	Cont.	0.35	1350	0.690	6.90	1.330	13.30	TP	CE	
					60		0.31	1600	0.580	5.80	1.050	10.50			

- The capacitor condenser depends on the voltage in use. Be sure to use the correct capacity for the voltage.
- The use of an incorrect condenser capacity can cause malfunctions. To ensure that you order the correct model, check the voltage in use before ordering.
- All the motor types in the table above are CE Mark and thermal protected (TP) is built in the coil.

Gear head rating torque table

Gear head type: G9B□KH

Frequency	Reduction ratio		3	3.6	5	6	7.5	9	10	12.5	15	18	20	25
50Hz	Ouput speed	r/min	500	417	300	250	200	166	150	120	100	83	75	60
	Rating torque	N·m	1.78	2.15	2.98	3.58	4.47	5.36	5.96	6.70	8.05	9.66	10.78	12.15
		Kgf·cm	18.2	21.9	30.4	36.5	45.6	54.7	60.8	68.4	82.1	98.6	110.0	124.0
60Hz	Ouput speed	r/min	600	500	360	300	240	200	180	144	120	100	90	72
	Rating torque	N·m	1.43	1.72	2.38	2.86	3.58	4.68	4.76	5.37	6.44	7.72	8.59	9.70
		Kgf·cm	14.6	17.5	24.3	29.2	36.5	43.7	48.6	54.8	65.7	78.8	87.6	99.0

Gear head type: G9B□KH

Frequency	Reduction ratio		30	36	40	50	60	75	90	100	120	150	180	200
50Hz	Ouput speed	r/min	50	41	37	30	25	20	16	15	12	10	8	7.5
	Rating torque	N·m	14.60	17.44	19.40	19.60	19.60	19.60	19.60	19.60	19.60	19.60	19.60	19.60
		Kgf·cm	149.0	178.0	198.0	200.0	200.0	200.0	200.0	200.0	200.0	200.0	200.0	200.0
60Hz	Ouput speed	r/min	60	50	45	36	30	24	20	18	15	12	10	9
	Rating torque	N·m	11.66	14.01	15.48	19.40	19.60	19.60	19.60	19.60	19.60	19.60	19.60	19.60
		Kgf·cm	119.0	143.0	158.0	198.0	200.0	200.0	200.0	200.0	200.0	200.0	200.0	200.0

- □ in gear head type names indicates the reduction ratio.
- When an intermediate gear head is used, the rating torgue is 19.60N · m(200kgf · cm).
- Rotation direction in shaded boxes are in the same direction as the motor rotation. Direction in unshaded boxes are in the opposite direction as the motor rotation.
- Rotation speed don't include motor slippage. The actual values will be between 2 and 20% lower, depending on the load.

Condenser

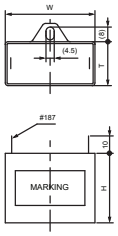

Motor type	Voltage (V)	Capacity (μF)	Condenser type	W (mm)	T (mm)	H (mm)
A9M90AH	1ph100 1ph110	25.0	DMF-252506	58	36	39
A9M90BH	1ph115	20.0	DMF-252006	58	36	39
A9M90CH	1ph200 1ph220	6.0	DMF-45605	50	25	40
A9M90DH	1ph220 1ph240	5.0	DMF-45505	50	25	40

Dimensions

Gear motors

Motor type ：A9M90□H

Gear head type ：G9B□KH

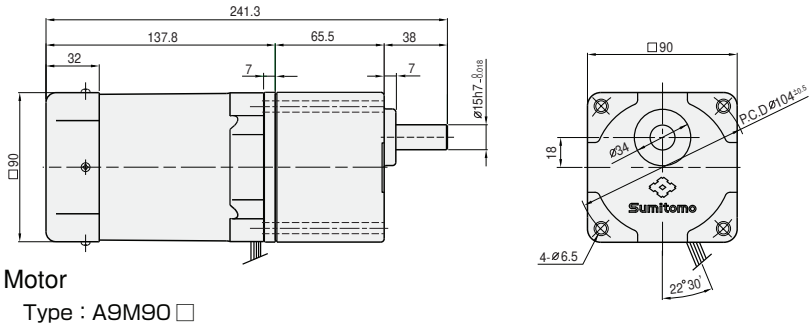

Gear head output shaft detail

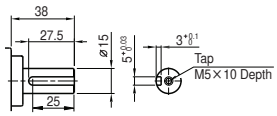

Motor

Type：A9M90□

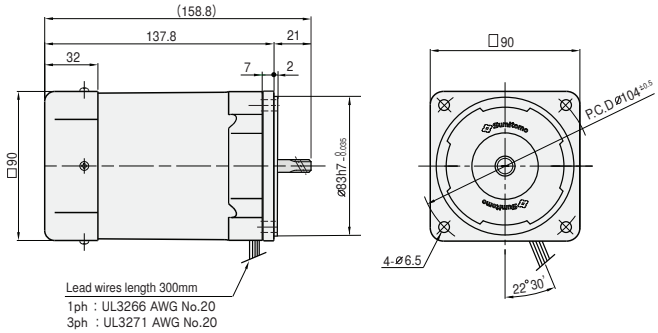

key size

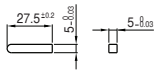

Intermediate gear head

Type: G9BXH10H

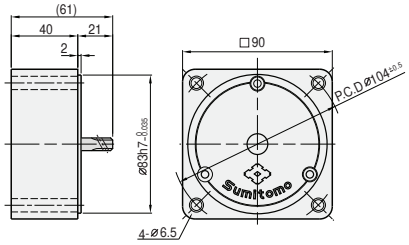

Table1. Weight

		Weight(kg)
Motor		2.93
Gear head	G9B3KH ～G9B10KH	1.21
	G9B12.5KH ～G9B20KH	1.30
	G9B25KH ～G9B60KH	1.40
	G9B75KH ～G9B200KH	1.45
Intermediate gear head		0.65

Wiring diagram

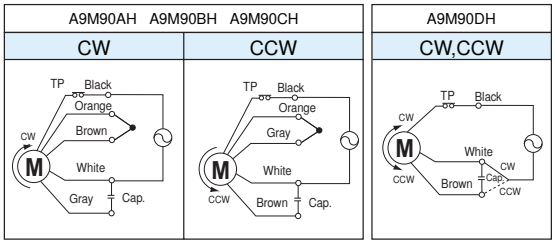

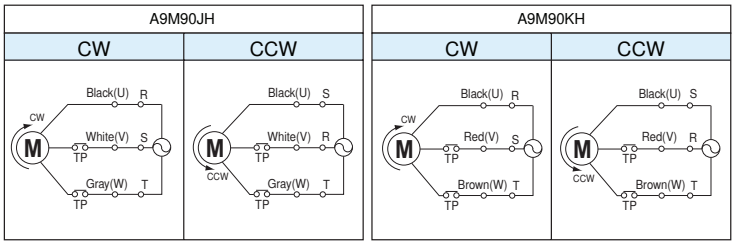

- Rotation directions are the directions as viewed from the end of the motor shaft.
- The motor must be completely stopped before its operation direction can be switched.
- If you try to switch the rotation direction while the motor is operating, the attempt may be unsuccessful, or may take some time

Related information

Selection procedure: p.11

Options: p.169

Standard specifications: p.10

Technical information: p.175

MEMO

BIBUS

BIBUS s.r.o.
+420 547 125 300
www.bibus.cz

Reversible motors

∗Gear head and reversible motor are sold separately.

Reversible motors

- Rotating direction of reversible motors can be changed immediately.
- Used for constant-speed operation.
- Simple built-in brake enables rapid stopping, but when large stored torque is required, model with electromagnetic brake should be used.
- Lead wires type.
- Time rating: Short-time (30 minutes)

Astero™

Overview
Induction
Reversible
Electromagnetic brakes
Terminal boxes
Speed controller (Overview)
Unit type
Socket type
Speed controller (Induction)
Speed controller (Reversible)
Speed controller (Electro-magnetic brake)
Brake Packs
Options
Technical Information
Overview
6W
15W
25W
40W
60W
90W

Overview of reversible motors (Standard specifications)

Table 1. Reversible motors standard specifications

	Item	Reversible motors standard specifications Single-phase motor
Motor	Capacity range	6 ~ 90 W 4 poles
	Protection method Enclosure	6 ~ 40 W: IP23 Totally enclosed non ventilated type 60 W ~: IP23 Totally enclosed fan cooled type
	Power source	100V 50/60Hz, 110V 60Hz 115V 60Hz 200V 50/60Hz, 220V 60Hz 220～240V 50Hz
	Insulation	CE Marking, Class E（120℃） UL Standard, Class A （105℃）
	Time rating	Short-time(30minutes)
	Starting method	Condenser running
	Lead wires	3wires UL Style 3266 20 AWG
	Standards	CE Marking (Low Voltage Directive), UL Standard
	Insulation resistance	At least 100 MΩ when measured with a 500 VDC megger between the motor coil and case at normal temperature and humidity after motor has reached rated operation.
	Insulation withstand voltage	No malfunction when a 1500 V, 50/60 Hz current is applied between the motor coil and case for 1 minute at normal temperature and humidity after the motor has reached rated operation.
	Temperature rise	The temperature rise value (ΔT) should be no more than 60˚C (no more than 45˚C for motors with fans) when measured by the prescribed method after the motor has reached the rated operation.
	Overheating protector (TP)	Built-in thermal protector (auto-restore type)Release: 120±5℃, Restore: 77±5℃
Gear	Lubrication method	Grease lubrication. Grease is loaded at shipment.
Paint	Color	Astero silver
Ambient conditions	Locations	Indoors (MInimal dust and humidity)
	Temperature	-10 to 40℃
	Humidity	Under 85%
	Elevation	Under 1,000 m
	Atmosphere	Well ventilated location, free of corrosive gases, explosive gases, vapors and dust.

Overview of reversible motors (Structure)

(1) Structure and operating principle

Reversible motors have a simple built-in braking into the rear of the motor shaft, making them ideal for applications requiring rapid and frequent changes in direction.
As shown in Fig1, the simple built-in braking structure uses a coil spring to slide a brake shoe on a brake plate while applying continual pressure. The simple built-in brakes of reversible motors have the following features:

(1) Apply frictional load to improve instant reversibility characteristic.
(2) Enable small overruns.
(3) Can store torque to a limited degree (about 10% of rating torque).

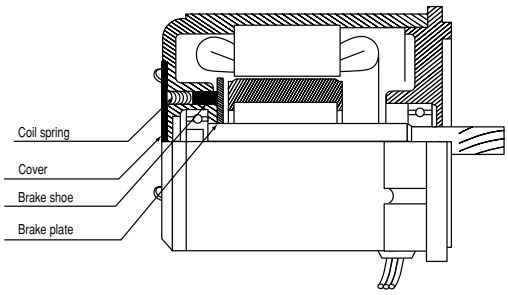

Fig1. Structure of reversible motor

Table 2 lists the stored torque and overrun of simple built-in brakes. These values vary according to the operation time and temperature, so should be used as reference values.
Note that during initial use, stored torque may be lower than the values in Table 2.

Table 2. Stored torque and overrun

No. of Phase	Frame size (mm・sq)	Output power (W)	Motor type	Stored torque (N・cm)	Stored torque (kgf・cm)	Over run (Rev.)
Single -phase	60	6	A6R06A	0.5	0.05	4
	70	15	A7R15A	1.3	0.13	5
	80	25	A8R25A	1.5	0.15	5
	90	40	A9R40A	4.0	0.40	6
		60	A9R60AH			
		90	A9R90AH			

Like induction motors, reversible motors are condenser run-type single-phase induction motors. Their motor speed/torque characteristic is the same as for induction motors.

However, as shown in Figure 2, reversible motors have a higher starting torque setting than induction motors, to improve their instant reversibility characteristic. As a result, they have high input losses and higher temperature rises than induction motors, so have a time rating of 30 minutes.

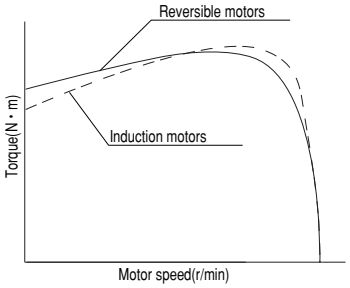

Fig 2. Motor speed-Torque characteristics

Values for characteristic table items such as rating torque, starting torque and current characteristic are valid when the brake shoe has been attached to the motor.

Overview
Induction
Reversible
Electromagnetic brakes
Terminal boxes
Speed controller (Overview)
Unit type
Socket type
Speed controller (Induction)
Speed controller (Reversible)
Speed controller (Electro-magnetic brake)
Brake Packs
Options
Technical Information
Overview
6W
15W
25W
40W
60W
90W

Overview of reversible motors

(2) Operation time and temperature rise

The temperature rise in a reversible motor depends on the operation cycle. Some operation cycles allow the motor to be used longer than the time rating (30 minutes).

Figures 4 to 9 show the temperature rise characteristic corresponding to each of the six operation cycles (A to F) shown in Fig 3. These characteristics are for no-load operation (creating the most extreme temperature rise).

When using the motor, select the pattern in Fig 3 that most closely matches the operation cycle you will use. Make sure the temperature doesn't rise to more than 60℃, as shown in the corresponding temperature rise characteristic graph in Figures 4 to 9.

Fig3. Running cycle of reversible motors

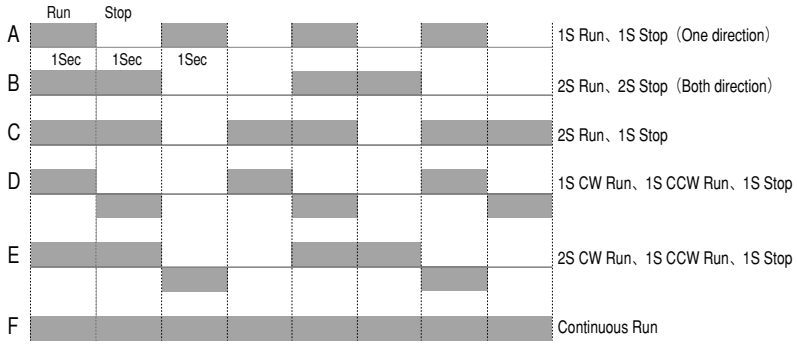

Fig 4

6W

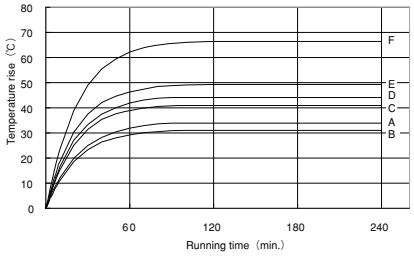

Fig 5

15W

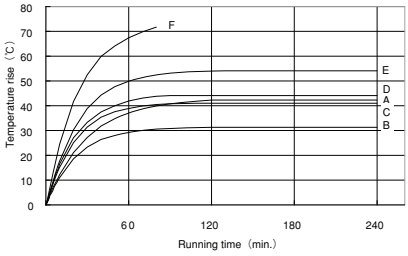

Fig 6

25W

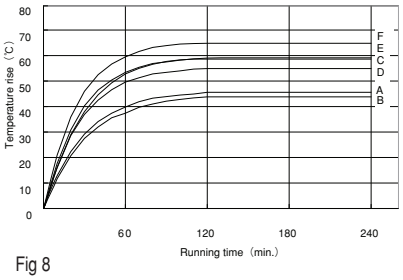

Fig 7

40W

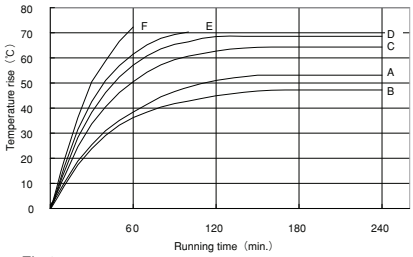

Fig 8

60W

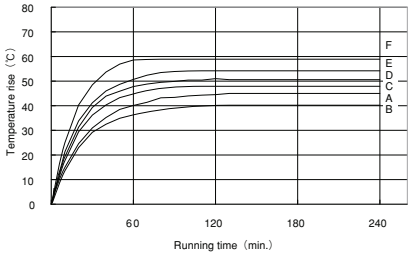

Fig 9

90W

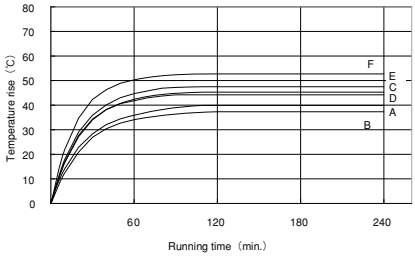

Overview of reversible motors (selection procedure)

Determine equivalent transmitted torque (Te)

Determine service factor (SF)	See service factor table (p. 32)	Tℓ : Actual torque transmitted by gear motor's output shaft [N·m]
Determine equivalent transmitted torque (Te)	Te = Tℓ × S.F.	Te : Equivalent transmitted torqu [N·m]

Make initial model selection

Determine reduction ratio	$i \fallingdotseq \frac{\text{Power frequency x 30}}{\text{Gear head output shaft speed}}$	i : Reduction ratio
Check gear head rating torque on relevant page	(P.34~P.45)	
Make initial gear head selection	Select model for which Te≦Tout	Tout: Allowable torque of gear head [N·m]
Make initial motor selection	Select motor with same gear head size	Select the motor one size larger.
Check operation time and temperature rise	Check temperature rise determined by motor size and operation cycle (see p. 30)	

Check motor's starting torque

Convert equivalent transmitted torque to motor shaft torque	$T_M = Te / (i \times \eta / 100)$ $T_{MS} = T_M / 0.8$	η : Gear head efficiency. See Table 5 on p. 180. T_M : Te converted to motor shaft torque [N·m] T_{MS} : Motor starting torque [N·m]
Check motor starting torque	T_{MS} must be no more than the starting torque in the rating table	0.8 : Safety coefficient for ensuring starting torque

Check load inertia

Calculate load's moment of inertia	See p. 32 for how to make the calculation	
Convert it to motor shaft's moment of inertia	$J_M = J/i^2$ (when reduction ratio is less than 50) $J_M = J/50^2$ (when reduction ratio is 50 or more)	J: Load's moment of inertia [kg·m^2] J_M: Converted motor shaft's moment of inertia [kg·m^2]
Check allowable load inertia	J_M must be no more than the allowable value of the load's moment of inertia given on p.12	

Check radial load

Calculate radial load	Pr = Tℓ × Cf × S.F. / R	Pr: Shaft radial load [N] Cf: Load connection factor S.F.: Service factor R: Pitch (radius of circle) of sprocket, gear, pulley or other drive component [m]
Check radial load	Pr must be no more than the output shaft's allowable radial load given in Table 7 on p. 181	Pro: Output shaft's allowable radial load [N]

Select model & dimensions

Select model	Model specifications are given in the 'Model' column on the relevant page
Check dimensions in diagram	Dimensions are shown in the diagram on the relevant page

Overview
Induction
Reversible
Electromagnetic brakes
Terminal boxes
Speed controller (Overview)
Unit type
Socket type
Speed controller (Induction)
Speed controller (Reversible)
Speed controller (Electro-magnetic brake)
Brake Packs
Options
Technical Information
Overview
6W
15W
25W
40W
60W
90W

Overview of reversible motors (Service factor)

Service factor (S. F.)

- Service factors are designed for 8 hours of per day with a uniform load.

Table 3. Service factor (S. F.)

Load condition \ Operation time	Up to 8 hours/day	Applications
Uniform load	1	Continuous load in one direction
Moderate shock load	1.5	Frequent changes of motor direction
Shock load	2	Instant changes of motor direction/stops

Shaft radial load and thrust load

- Calculate the shaft radial load when attaching a chain sprocket or pulley.
- The shaft radial load is calculated by the formula below. It must be smaller than the allowable radial load of the output shaft given table 7 on P.181.

$$\text{Shaft radial load (Pr)} = \frac{P_\ell \times Cf \times S.F.}{R} \text{ [N]}$$

P_ℓ : Actual torque transmitted by slow speed shaft (N·m)
Cf : Load connection factor (see Table 4)
R : Pitch (radius of circle) of sprocket, gear, pulley or other drive

Table 4. Load connection factor (Cf)

Type of connection	Cf
Chain	1
Gear	1.25
Pulley	1.5

Load moment of inertia

- The converted motor shaft load moment of inertia is calculated by the following formula:

$J_M = J/i^2$ (when reduction ratio is less than 50)
$J_M = J/50^2$ (when reduction ratio is 50 or more)

i : Reduction ratio
J : Load moment of inertia (kg·m²)
J_M : Converted motor shaft load moment of inertia (kg·m²)

- Note that if the motor is used with a load moment of inertia exceeding the corresponding allowable valbe(given table5.)gears and bearings will quickly become damaged.

Table 5. Allowable values for converted motor shaft load moment of inertia (10^{-4} kg·m²)

Motor size	Motor power (W)	1ph	3ph
A6M06	6	0.05	–
A7M15	15	0.15	–
A8M25	25	0.30	0.30
A9M40	40	0.75	0.75
A9M60	60	1.00	1.00
A9M90	90	1.00	1.00

Overview of reversible motors (Moment of inertia)

Calculation of moment of inertia J

(1) Moment of inertia of rotating motion

Rotating center meets gravity center		Rotating center dosen't meets gravity center	
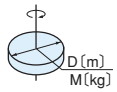	$J=\frac{1}{8}MD^2$ 〔kg・m²〕	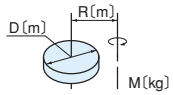	$J=\frac{M}{4}\left(\frac{1}{2}D^2+4R^2\right)$ 〔kg・m²〕
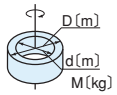	$J=\frac{1}{8}M(D^2+d^2)$ 〔kg・m²〕	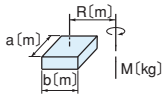	$J=\frac{M}{4}\left(\frac{a^2+b^2}{3}+4R^2\right)$ 〔kg・m²〕
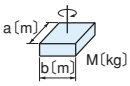	$J=\frac{1}{12}M(a^2+b^2)$ 〔kg・m²〕	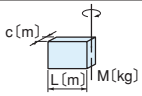	$J=\frac{1}{12}M(4L^2+C^2)$ 〔kg・m²〕

(2) Moment of inertia of rectilinear motion

General motion	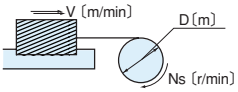	$J=\frac{M}{4}\left(\frac{V}{\pi\cdot Ns}\right)^2=\frac{M}{4}D^2$ 〔kg・m²〕
Horizontal motion by conveyor	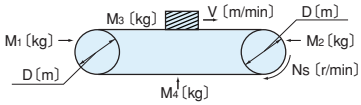	$J=\frac{M}{4}\left(\frac{M_1+M_2}{2}+M_3+M_4\right)\times D^2$ 〔kg・m²〕
Horizontal motion by screw	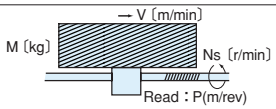	$J=\frac{M}{4}\left(\frac{V}{\pi\cdot Ns}\right)^2=\frac{M}{4}\left(\frac{P}{\pi}\right)^2$ 〔kg・m²〕
Vertical motion by winch	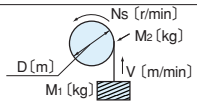	$J=\frac{M_1D^2}{4}+\frac{1}{8}M_2D^2$ 〔kg・m²〕

(3) Calculation of moment of inertia at defferent rotating speeds

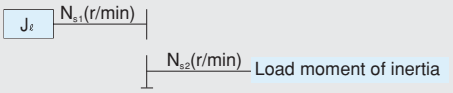

$$J_\ell=\left(\frac{N_{s2}}{N_{s1}}\right)^2 J$$

6W □60mm Reversible Motors

Motor specification table

Frame size mm sq	Motor Type	Poles	Output (W)	Voltage (V)	Frequency (Hz)	Time ratiang	Rating torque: Current (A)	Rating torque: Output speed (r/min)	Rating torque: Torque (N·m)	Rating torque: Torque (Kgf·cm)	Starting torque (N·m)	Starting torque (Kgf·cm)	Over-heating pro-tection	Standard	Condenser (μF)
60	A6R06A	4	6	1ph100	50	30Min.	0.21	1200	0.050	0.50	0.045	0.45	ZP	CE	3.0
					60			1500	0.042	0.42					
				1ph110	60		0.22	1550	0.040	0.40	0.060	0.60			
	A6R06B	4	6	1ph115	60	30Min.	0.18	1500	0.042	0.42	0.050	0.50	ZP	UL/CE	2.3
	A6R06C	4	6	1ph200	50	30Min.	0.10	1200	0.045	0.45	0.053	0.53	ZP	CE	0.8
					60			1500	0.042	0.42					
				1ph220	60		0.11	1550	0.040	0.40	0.060	0.60			
	A6R06D	4	5.8	1ph220	50	30Min.	0.09	1200	0.047	0.47	0.050	0.50	ZP	CE	0.7
			6	1ph240			0.10		0.050	0.50	0.055	0.55			

- The capacitor condenser depends on the voltage in use. Be sure to use the correct capacity for the voltage.
- The use of an incorrect condenser capacity can cause malfunctions. To ensure that you order the correct model, check the voltage in use before ordering.
- All the motor types in the table above are CE Mark and impedance-protected (ZP) types.

Gear head rating torque table

Gear head type: G6□D

Frequency	Reduction ratio		3	3.6	5	6	7.5	9	10	12.5	15	18	20	25
50Hz	Ouput speed	r/min	500	417	300	250	200	166	150	120	100	83	75	60
	Rating torque	N·m	0.13	0.15	0.21	0.26	0.31	0.38	0.42	0.53	0.63	0.76	0.76	0.95
		Kgf·cm	1.3	1.5	2.1	2.6	3.2	3.9	4.3	5.4	6.4	7.7	7.7	9.7
60Hz	Ouput speed	r/min	600	500	360	300	240	200	180	144	120	100	90	72
	Rating torque	N·m	0.10	0.13	0.17	0.21	0.26	0.30	0.34	0.43	0.51	0.62	0.62	0.76
		Kgf·cm	1.0	1.3	1.7	2.1	2.6	3.1	3.5	4.4	5.2	6.3	6.3	7.8

Gear head type: G6□D

Frequency	Reduction ratio		30	36	40	50	60	75	90	100	120	150	180	200
50Hz	Ouput speed	r/min	50	41	37	30	25	20	16	15	12	10	8	7.5
	Rating torque	N·m	1.14	1.36	1.52	1.72	2.06	2.57	2.94	2.94	2.94	2.94	2.94	2.94
		Kgf·cm	11.6	13.9	15.5	17.5	21.0	26.2	30.0	30.0	30.0	30.0	30.0	30.0
60Hz	Ouput speed	r/min	60	50	45	36	30	24	20	18	15	12	10	9
	Rating torque	N·m	0.92	1.11	1.24	1.39	1.67	2.09	2.50	2.78	2.94	2.94	2.94	2.94
		Kgf·cm	9.4	11.3	12.6	14.2	17.0	21.3	25.5	28.4	30.0	30.0	30.0	30.0

- □ in gear head type names indicates the reduction ratio.
- Intermediate gear heads are for use with gear heads having a reduction ratio of 30 or more. When an intermediate gear head is used, the rating torque is 1.96 N•m (20 kgf•cm) for a reduction ratio between 30 and 40, and 2.94 N•m (30 kgf•cm) for a reduction ratio of 50 or more.
- Rotation direction in shaded boxes are in the same direction as the motor rotation. Direction in unshaded boxes are in the opposite direction as the motor rotation.
- Rotation speed don't include motor slippage. The actual values will be between 2 and 20% lower, depending on the load.

Condenser

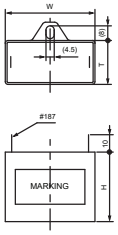

Motor type	Voltage (V)	Capacity (μF)	Condenser type	W (mm)	T (mm)	H (mm)
A6R06A	1ph100	3.0	DMF-25305	36	16	25
	1ph110					
A6R06B	1ph115	2.3	DMF-25235	36	16	25
A6R06C	1ph200	0.8	DMF-45804	36	16	25
	1ph220					
A6R06D	1ph220	0.7	DMF-45704	36	16	25
	1ph240					

Dimensions

Gear motors

Motor type : A6R06□

Gear head type : G6□D

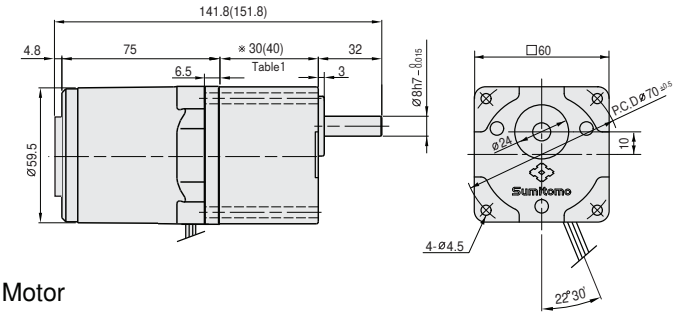

Gear head output shaft detail

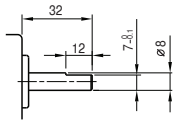

Motor

Type : A6R06□

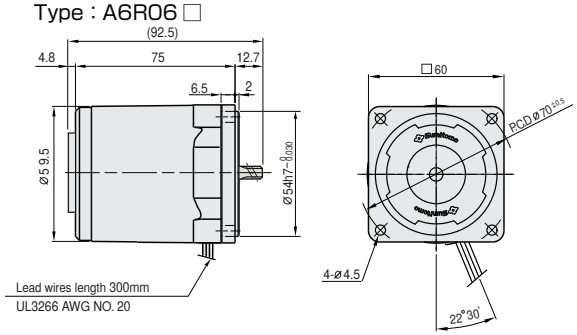

Table1. Gear head length

Gear head size	Length(mm)
G63D～G618D	30
G620D～G6200D	40

Intermediate gear head

Type: G6XH10

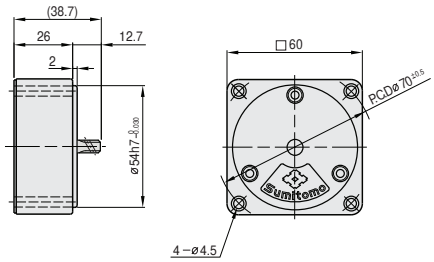

Table2. Weight

		Weight(kg)
Motor		0.70
Gear head	G63D ～ G618D	0.24
	G620D ～ G640D	0.30
	G650D ～ G6200D	0.33
Intermediate gear head		0.18

Wiring diagram

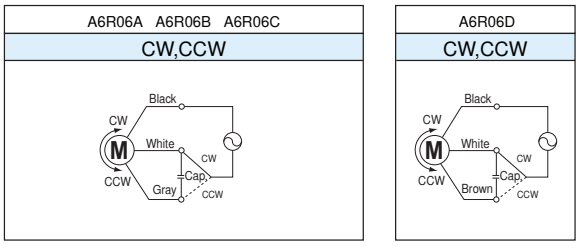

- Rotation directions are the directions as viewed from the end of the motor shaft.

Related information

Selection procedure: p.31

Options: p.169

Standard specifications: p.28

Technical information: p.175

15W □70mm Reversible Motors

Motor specification table

Frame size mm sq	Motor Type	Poles	Output (W)	Voltage (V)	Frequency (Hz)	Time ratiang	Rating torque Current (A)	Rating torque Output speed (r/min)	Rating torque Torque (N·m)	Rating torque Torque (Kgf·cm)	Starting torque (N·m)	Starting torque (Kgf·cm)	Over-heating pro-tection	Standard	Condenser (μF)
70	A7R15A	4	15	1ph100	50	30Min.	0.42	1200	0.125	1.25	0.090	0.90	TP	CE	6.0
					60		0.42	1500	0.100	1.00	0.090	0.90			
				1ph110	60		0.44	1550	0.100	1.00	0.110	1.10			
	A7R15B	4	15	1ph115	60	30Min.	0.35	1550	0.100	1.00	0.095	0.95	TP	UL/CE	4.5
	A7R15C	4	15	1ph200	50	30Min.	0.21	1200	0.125	1.25	0.090	0.90	TP	CE	1. 5
					60		0.21	1500	0.100	1.00	0.090	0.90			
				1ph220	60		0.22	1550	0.100	1.00	0.110	1.10			
	A7R15D	4	15	1ph220	50	30Min.	0.17	1200	0.125	1.25	0.090	0.90	TP	CE	1.2
				1ph240			0.18		0.145	1.45	0.110	1.10			

- The capacitor condenser depends on the voltage in use. Be sure to use the correct capacity for the voltage.
- The use of an incorrect condenser capacity can cause malfunctions. To ensure that you order the correct model, check the voltage in use before ordering.
- All the motor types in the table above are CE Mark and thermal protected (TP) is built in the coil.

Gear head rating torque table

Gear head type: G7□K														
Frequency	Reduction ratio		3	3.6	5	6	7.5	9	10	12.5	15	18	20	25
50Hz	Ouput speed	r/min	500	417	300	250	200	166	150	120	100	83	75	60
	Rating torque	N·m	0.31	0.38	0.53	0.64	0.79	0.95	1.06	1.32	1.59	1.90	1.90	2.37
		Kgf·cm	3.2	3.9	5.4	6.5	8.1	9.7	10.8	13.5	16.2	19.4	19.4	24.2
60Hz	Ouput speed	r/min	600	500	360	300	240	200	180	144	120	100	90	72
	Rating torque	N·m	0.29	0.35	0.50	0.60	0.75	0.89	0.99	1.25	1.49	1.79	1.79	2.24
		Kgf·cm	3.0	3.6	5.1	6.1	7.6	9.1	10.1	12.7	15.2	18.2	18.2	22.8

Gear head type: G7□K														
Frequency	Reduction ratio		30	36	40	50	60	75	90	100	120	150	180	200
50Hz	Ouput speed	r/min	50	41	37	30	25	20	16	15	12	10	8	7.5
	Rating torque	N·m	2.85	3.42	3.81	4.28	4.90	4.90	4.90	4.90	4.90	4.90	4.90	4.90
		Kgf·cm	29.1	34.9	38.8	43.6	50.0	50.0	50.0	50.0	50.0	50.0	50.0	50.0
60Hz	Ouput speed	r/min	60	50	45	36	30	24	20	18	15	12	10	9
	Rating torque	N·m	2.68	3.22	3.58	4.02	4.83	4.90	4.90	4.90	4.90	4.90	4.90	4.90
		Kgf·cm	27.3	32.8	36.5	41.0	49.2	50.0	50.0	50.0	50.0	50.0	50.0	50.0

- □ in gear head type names indicates the reduction ratio.
- Intermediate gear heads are for use with gear heads having a reduction ratio of 25 or more. When an intermediate gear head is used, the rating torque is 3.92 N•m (40 kgf•cm) for a reduction ratio between 25 and 40, and 4.90 N•m (50 kgf•cm) for a reduction ratio of 50 or more.
- Rotation direction in shaded boxes are in the same direction as the motor rotation. Direction in unshaded boxes are in the opposite direction as the motor rotation.
- Rotation speed don't include motor slippage. The actual values will be between 2 and 20% lower, depending on the load.

Condenser

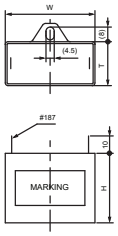

Motor type	Voltage (V)	Capacity (μF)	Condenser type	W (mm)	T (mm)	H (mm)
A7R15A	1ph100 1ph110	6.0	DMF-25605	38	19	29
A7R15B	1ph115	4.5	DMF-25455	38	19	29
A7R15C	1ph200 1ph220	1.5	DMF-45155	36	16	25
A7R15D	1ph220 1ph240	1.2	DMF-45125	36	16	25

Dimensions

Gear motors

Motor type ：A7R15□

Gear head type ：G7□K

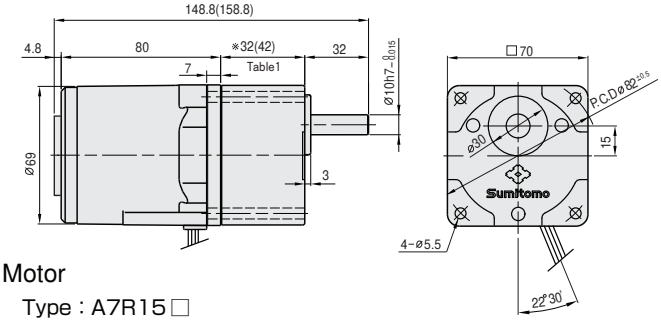

Gear head output shaft detail

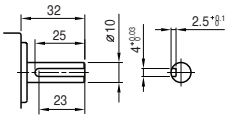

key size

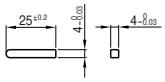

Motor

Type：A7R15□

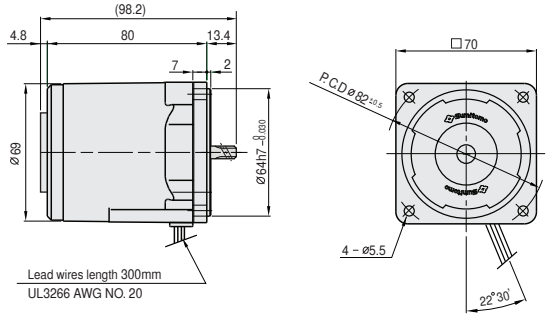

Intermediate gear head

Type: G7XH10

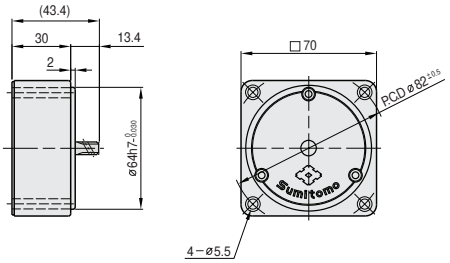

Table1. Gear head length

Gear head size	Length(mm)
G73K～G718K	32
G720K～G7200K	42

Table2. Weight

		Weight(kg)
Motor		1.04
Gear head	G73K ～ G718K	0.38
	G720K ～ G740K	0.47
	G750K ～ G7200K	0.52
Intermediate gear head		0.32

Wiring diagram

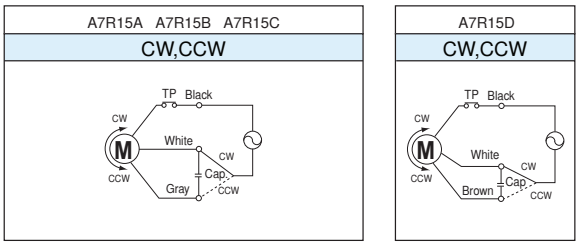

- Rotation directions are the directions as viewed from the end of the motor shaft.

Related information

Selection procedure: p.31

Options: p.169

Standard specifications: p.28

Technical information: p.175

25W □80mm Reversible Motors

Motor specification table

Frame size mm sq	Motor Type	Poles	Output	Voltage	Frequency	Time ratiang	Rating torque				Starting torque		Over-heating pro-tection	Standard	Condenser
							Current	Output speed	Torque						
			(W)	(V)	(Hz)		(A)	(r/min)	(N·m)	(Kgf·cm)	(N·m)	(Kgf·cm)			(μF)
80	A8R25A	4	25	1ph100	50	30Min.	0.63	1250	0.210	2.10	0.180	1.80	TP	CE	10. 0
					60		0.70	1500	0.170	1.70					
				1ph110	60		0.71	1550	0.170	1.70	0.230	2.30			
	A8R25B	4	25	1ph115	60	30Min.	0.63	1550	0.170	1.70	1.300	1.30	TP	UL/CE	7.0
	A8R25C	4	25	1ph200	50	30Min.	0.33	1250	0.210	2.10	0.180	1.80	TP	CE	2. 5
					60		0.33	1550	0.170	1.70					
				1ph220	60		0.35	1600	0.165	1.65	0.230	2.30			
	A8R25D	4	25	1ph220	50	30Min.	0.26	1200	0.200	2.00	1.700	1.70	TP	CE	2. 0
				1ph240			0.28		0.220	2.20	2.200	2.20			

- The capacitor condenser depends on the voltage in use. Be sure to use the correct capacity for the voltage.
- The use of an incorrect condenser capacity can cause malfunctions. To ensure that you order the correct model, check the voltage in use before ordering.
- All the motor types in the table above are CE Mark and thermal protected (TP) is built in the coil.

Gear head rating torque table

Gear head type: G8□K

Frequency	Reduction ratio		3	3.6	5	6	7.5	9	10	12.5	15	18	20	25
50Hz	Ouput speed	r/min	500	417	300	250	200	166	150	120	100	83	75	60
	Rating torque	N·m	0.52	0.63	0.87	1.05	1.31	1.57	1.74	2.19	2.62	3.15	3.15	3.94
		Kgf·cm	5.3	6.4	8.9	10.7	13.4	16.0	17.8	22.3	26.7	32.1	32.1	40.2
60Hz	Ouput speed	r/min	600	500	360	300	240	200	180	144	120	100	90	72
	Rating torque	N·m	0.43	0.51	0.72	0.85	1.07	1.28	1.43	1.78	2.15	2.57	2.58	3.22
		Kgf·cm	4.4	5.2	7.3	8.7	10.9	13.1	14.6	18.2	21.9	26.2	26.3	32.9

Gear head type: G8□K

Frequency	Reduction ratio		30	36	40	50	60	75	90	100	120	150	180	200
50Hz	Ouput speed	r/min	50	41	37	30	25	20	16	15	12	10	8	7.5
	Rating torque	N·m	4.72	5.66	6.29	7.12	7.84	7.84	7.84	7.84	7.84	7.84	7.84	7.84
		Kgf·cm	48.2	57.8	64.2	72.6	80.0	80.0	80.0	80.0	80.0	80.0	80.0	80.0
60Hz	Ouput speed	r/min	60	50	45	36	30	24	20	18	15	12	10	9
	Rating torque	N·m	3.86	4.64	5.16	5.82	6.99	7.84	7.84	7.84	7.84	7.84	7.84	7.84
		Kgf·cm	39.4	47.3	52.6	59.4	71.3	80.0	80.0	80.0	80.0	80.0	80.0	80.0

- □ in gear head type names indicates the reduction ratio.
- Intermediate gear heads are for use with gear heads having a reduction ratio of 25 or more. When an intermediate gear head is used, the rating torque is 5.88 N•m (60 kgf•cm) for a reduction ratio between 25 and 40, and 7.84 N•m (80 kgf•cm) for a reduction ratio of 50 or more.
- Rotation direction in shaded boxes are in the same direction as the motor rotation. Direction in unshaded boxes are in the opposite direction as the motor rotation.
- Rotation speed don't include motor slippage. The actual values will be between 2 and 20% lower, depending on the load.

Condenser

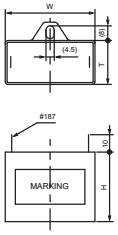

Motor type	Voltage	Capacity	Condenser type	W	T	H
	(V)	(μF)		(mm)	(mm)	(mm)
A8R25A	1ph100 1ph110	10.0	DMF-251006	47	19	28
A8R25B	1ph115	7.0	DMF-25705	48	21	33
A8R25C	1ph200 1ph220	2.5	DMF-45255	47	19	28
A8R25D	1ph220 1ph240	2.0	DMF-45205	38	19	29

Dimensions

Gear motors

Motor type : A8R25 □

Gear head type : G8 □ K

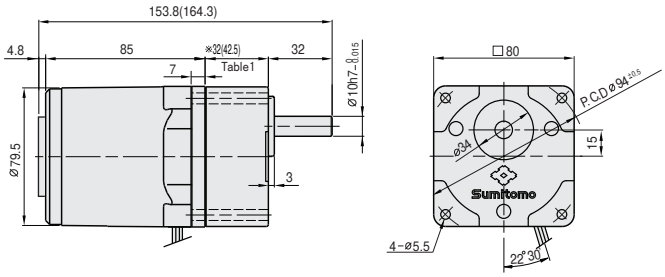

Gear head output shaft detail

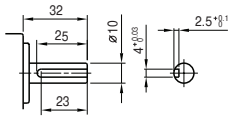

Motor

Type : A8R25 □

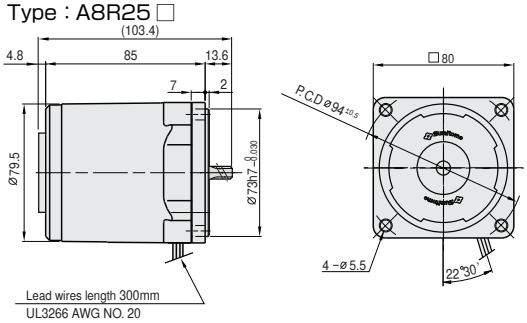

key size

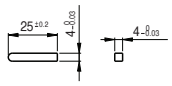

Table1. Gear head length

Gear head size	Length (mm)
G83K ～G818K	32
G820K ～G8200K	42.5

Intermediate gear head

Type: G8XH10

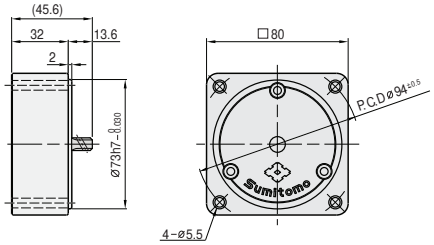

Table2. Weight

		Weight(kg)
Motor		1.46
Gear head	G83K ～ G818K	0.43
	G820K ～ G840K	0.57
	G850K ～ G8200K	0.61
Intermediate gear head		0.43

Wiring diagram

A8R25A A8R25B A8R25C	A8R25D
CW,CCW	CW,CCW

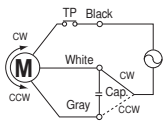

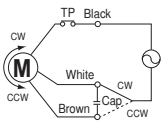

- Rotation directions are the directions as viewed from the end of the motor shaft.

Related information

Selection procedure: p.31

Options: p.169

Standard specifications: p.28

Technical information: p.175

40W □90mm Reversible Motors

Motor specification table

Frame size mm sq	Motor Type	Poles	Output	Voltage	Frequency	Time ratiang	Rating torque				Starting torque		Over-heating pro-tection	Standard	Condenser
							Current	Output speed	Torque						
			(W)	(V)	(Hz)		(A)	(r/min)	(N·m)	(Kgf·cm)	(N·m)	(Kgf·cm)			(μF)
90	A9R40A	4	40	1ph100	50	30Min.	0.84	1300	0.300	3.00	0.280	2.80	TP	CE	15. 0
					60		1.00	1550	0.260	2.60					
				1ph110	60		1.00	1600	0.250	2.50	0.350	3.50			
	A9R40B	4	40	1ph115	60	30Min.	1.00	1550	0.270	2.70	0.290	2.90	TP	UL/CE	12.0
	A9R40C	4	40	1ph200	50	30Min.	0.39	1300	0.310	3.10	0.280	2.80	TP	CE	3. 5
					60		0.47	1550	0.260	2.60					
				1ph220	60		0.46	1600	0.250	2.50	0.350	3.50			
	A9R40D	4	40	1ph220	50	30Min.	0.40	1250	0.320	3.20	0.300	3.00	TP	CE	3. 0
				1ph240			0.42		0.340	3.40	0.320	3.20			

- The capacitor condenser depends on the voltage in use. Be sure to use the correct capacity for the voltage.
- The use of an incorrect condenser capacity can cause malfunctions. To ensure that you order the correct model, check the voltage in use before ordering.
- All the motor types in the table above are CE Mark and thermal protected (TP) is built in the coil.

Gear head rating torque table

Gear head type: G9A□K

Frequency	Reduction ratio		3	3.6	5	6	7.5	9	10	12.5	15	18	20	25
50Hz	Ouput speed	r/min	500	417	300	250	200	166	150	120	100	83	75	60
	Rating torque	N·m	0.81	0.97	1.35	1.62	2.03	2.43	2.70	3.37	4.05	4.86	4.86	6.09
		Kgf·cm	8.3	9.9	13.8	16.5	20.7	24.8	27.5	34.4	41.3	49.6	49.6	62.1
60Hz	Ouput speed	r/min	600	500	360	300	240	200	180	144	120	100	90	72
	Rating torque	N·m	0.67	0.80	1.11	1.33	1.67	2.00	2.23	2.78	3.33	4.00	4.01	5.01
		Kgf·cm	6.8	8.2	11.3	13.6	17.0	20.4	22.7	28.4	34.0	40.8	40.9	51.1

Gear head type: G9A□K

Frequency	Reduction ratio		30	36	40	50	60	75	90	100	120	150	180	200
50Hz	Ouput speed	r/min	50	41	37	30	25	20	16	15	12	10	8	7.5
	Rating torque	N·m	7.30	8.76	9.73	9.80	9.80	9.80	9.80	9.80	9.80	9.80	9.80	9.80
		Kgf·cm	74.5	89.4	99.3	100.0	100.0	100.0	100.0	100.0	100.0	100.0	100.0	100.0
60Hz	Ouput speed	r/min	60	50	45	36	30	24	20	18	15	12	10	9
	Rating torque	N·m	6.01	7.21	8.02	9.80	9.80	9.80	9.80	9.80	9.80	9.80	9.80	9.80
		Kgf·cm	61.3	73.6	81.8	100.0	100.0	100.0	100.0	100.0	100.0	100.0	100.0	100.0

- □ in gear head type names indicates the reduction ratio.
- When an intermediate gear head is used, the rating torque is 9.80N · m(100kgf · cm).
- Rotation direction in shaded boxes are in the same direction as the motor rotation. Direction in unshaded boxes are in the opposite direction as the motor rotation.
- Rotation speed don't include motor slippage. The actual values will be between 2 and 20% lower, depending on the load.

Condenser

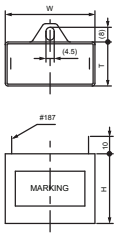

Motor type	Voltage	Capacity	Condenser type	W	T	H
	(V)	(μF)		(mm)	(mm)	(mm)
A9R40A	1ph100 1ph110	15.0	DMF-251506	50	25	40
A9R40B	1ph115	12.0	DMF-251206	48	21	33
A9R40C	1ph200 1ph220	3.5	DMF-45355	48	21	33
A9R40D	1ph220 1ph240	3.0	DMF-45305	47	19	28

Dimensions

Gear motors

Motor type : A9R40□

Gear head type : G9A□K

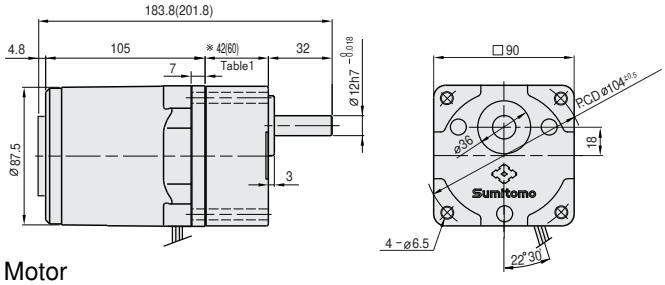

Gear head output shaft detail

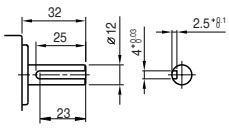

Motor

Type : A9R40□

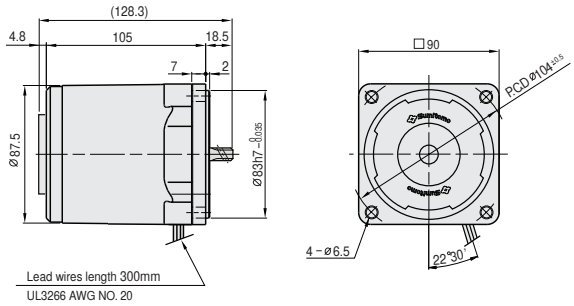

key size

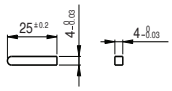

Table1. Gear head length

Gear head size	Length(mm)
G9A3K～G9A18K	42
G9A20K～G9A200K	60

Intermediate gear head

Type: G9AXH10

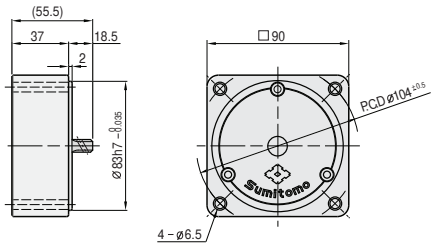

Table2. Weight

		Weight(kg)
Motor		2.34
Gear head	G9A3K ～ G9A18K	0.73
	G9A20K ～ G9A40K	1.03
	G9A50K ～ G9A200K	1.13
Intermediate gear head		0.60

Wiring diagram

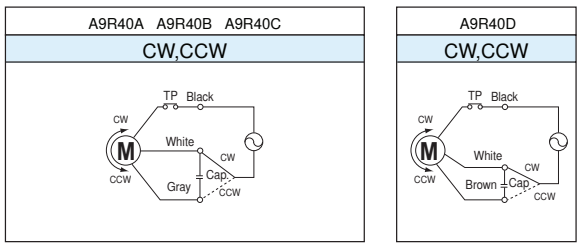

- Rotation directions are the directions as viewed from the end of the motor shaft.

Related information

Selection procedure: p.31

Options: p.169

Standard specifications: p.28

Technical information: p.175

60W □90mm Reversible Motors

Motor specification table

Frame size mm sq	Motor Type	Poles	Output (W)	Voltage (V)	Frequency (Hz)	Time ratiang	Rating torque: Current (A)	Rating torque: Output speed (r/min)	Rating torque: Torque (N·m)	Rating torque: Torque (Kgf·cm)	Starting torque (N·m)	Starting torque (Kgf·cm)	Over-heating pro-tection	Standard	Condenser (μF)
90	A9R60AH	4	60	1ph100	50	30Min.	1.40	1250	0.480	4.80	0.600	6.00	TP	CE	25. 0
					60		1.60	1550	0.390	3.90					
				1ph110	60		1.60	1600	0.380	3.80	0.700	7.00			
	A9R60BH	4	60	1ph115	60	30Min.	1.30	1600	0.390	3.90	0.600	6.00	TP	UL/CE	20.0
	A9R60CH	4	60	1ph200	50	30Min.	0.70	1250	0.480	4.80	0.550	5.50	TP	CE	6. 0
					60		0.76	1550	0.390	3.90					
				1ph220	60		0.75	1600	0.380	3.80	0.700	7.00			
	A9R60DH	4	60	1ph220	50	30Min.	0.63	1250	0.480	4.80	0.590	5.90	TP	CE	5. 0
				1ph240			0.67		0.500	5.00	0.630	6.30			

- The capacitor condenser depends on the voltage in use. Be sure to use the correct capacity for the voltage.
- The use of an incorrect condenser capacity can cause malfunctions. To ensure that you order the correct model, check the voltage in use before ordering.
- All the motor types in the table above are CE Mark and thermal protected (TP) is built in the coil.

Gear head rating torque table

Gear head type: G 9 B□K H

Frequency	Reduction ratio		3	3.6	5	6	7.5	9	10	12.5	15	18	20	25
50Hz	Ouput speed	r/min	500	417	300	250	200	166	150	120	100	83	75	60
	Rating torque	N·m	1.20	1.43	1.99	2.38	2.99	3.58	3.97	4.47	5.37	6.44	7.15	8.09
		Kgf·cm	12.2	14.6	20.3	24.3	30.4	36.5	40.5	45.6	54.8	65.7	73.0	82.5
60Hz	Ouput speed	r/min	600	500	360	300	240	200	180	144	120	100	90	72
	Rating torque	N·m	0.95	1.15	1.59	1.90	2.38	2.86	3.18	3.58	4.29	5.16	5.72	6.47
		Kgf·cm	9.7	11.7	16.2	19.4	24.3	29.2	32.4	36.5	43.8	52.6	58.4	66.0

Gear head type: G 9 B□K H

Frequency	Reduction ratio		30	36	40	50	60	75	90	100	120	150	180	200
50Hz	Ouput speed	r/min	50	41	37	30	25	20	16	15	12	10	8	7.5
	Rating torque	N·m	9.70	11.66	12.94	16.17	19.40	19.60	19.60	19.60	19.60	19.60	19.60	19.60
		Kgf·cm	99.0	119.0	132.0	165.0	198.0	200.0	200.0	200.0	200.0	200.0	200.0	200.0
60Hz	Ouput speed	r/min	60	50	45	36	30	24	20	18	15	12	10	9
	Rating torque	N·m	7.76	9.31	10.39	12.94	15.48	17.35	19.60	19.60	19.60	19.60	19.60	19.60
		Kgf·cm	79.2	95.0	106.0	132.0	158.0	177.0	200.0	200.0	200.0	200.0	200.0	200.0

- □ in gear head type names indicates the reduction ratio.
- When an intermediate gear head is used, the rating torgue is 19.60N · m(200kgf · cm).
- Rotation direction in shaded boxes are in the same direction as the motor rotation. Direction in unshaded boxes are in the opposite direction as the motor rotation.
- Rotation speed don't include motor slippage. The actual values will be between 2 and 20% lower, depending on the load.

Condenser

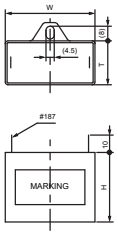

Motor type	Voltage (V)	Capacity (μF)	Condenser type	W (mm)	T (mm)	H (mm)
A9R60AH	1ph100	25.0	DMF-252506	58	36	39
	1ph110					
A9R60BH	1ph115	20.0	DMF-252006	58	36	39
A9R60CH	1ph200	6.0	DMF-45605	50	25	40
	1ph220					
A9R60DH	1ph220	5.0	DMF-45505	50	25	40
	1ph240					

Dimensions

Gear motors

Motor type : A9R60□H
Gear head type : G9B□KH

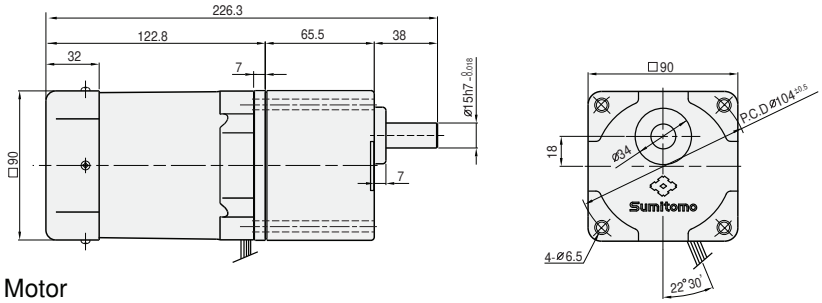

Gear head output shaft detail

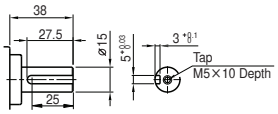

Motor

Type : A9R60□H

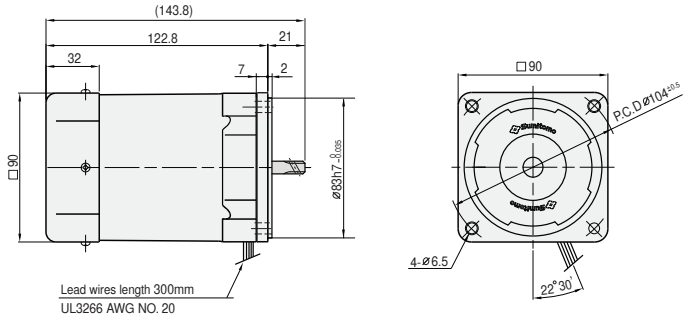

key size

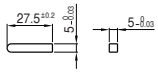

Intermediate gear head

Type: G9BXH10H

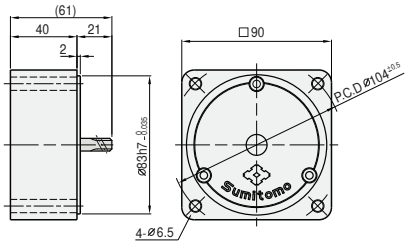

Table1. weight

		Weight(kg)
Motor		2.48
Gear head	G9B3KH ~ G9B10KH	1.21
	G9B12.5KH ~ G9B20KH	1.30
	G9B25KH ~ G9B60KH	1.40
	G9B75KH ~ G9B200KH	1.45
Intermediate gear head		0.65

Wiring diagram

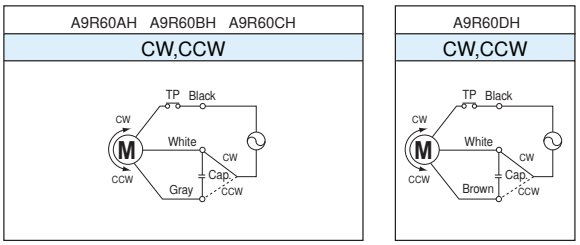

- Rotation directions are the directions as viewed from the end of the motor shaft.

Related information

Selection procedure: p.31
Options: p.169
Standard specifications: p.28
Technical information: p.175

90W □90mm Reversible Motors

Motor specification table

Frame size mm sq	Motor Type	Poles	Output	Voltage	Frequency	Time ratiang	Rating torque				Starting torque		Over-heating pro-tection	Standard	Condenser
							Current	Output speed	Torque						
			(W)	(V)	(Hz)		(A)	(r/min)	(N·m)	(Kgf·cm)	(N·m)	(Kgf·cm)			(μF)
90	A9R90AH	4	90	1ph100	50	30Min.	2.10	1200	0.750	7.50	0.650	6.50	TP	CE	30.0
					60		2.25	1500	0.600	6.00					
				1ph110	60		2.25	1550	0.580	5.80	0.850	8.50			
	A9R90BH	4	90	1ph115	60	30Min.	1.80	1550	0.600	6.00	0.800	8.00	TP	UL/CE	25.0
	A9R90CH	4	90	1ph200	50	30Min.	0.90	1200	0.750	7.50	0.650	6.50	TP	CE	7. 0
					60		1.00	1500	0.600	6.00					
				1ph220	60		1.00	1550	0.580	5.80	0.850	8.50			
	A9R90DH	4	90	1ph220	50	30Min.	0.82	1250	0.720	7.20	0.650	6.50	TP	CE	6. 0
				1ph240			0.86		0.740	7.40	0.800	8.00			

- The capacitor condenser depends on the voltage in use. Be sure to use the correct capacity for the voltage.
- The use of an incorrect condenser capacity can cause malfunctions. To ensure that you order the correct model, check the voltage in use before ordering.
- All the motor types in the table above are CE Mark and thermal protected (TP) is built in the coil.

Gear head rating torque table

Gear head type: G9B□KH

Frequency	Reduction ratio		3	3.6	5	6	7.5	9	10	12.5	15	18	20	25
50Hz	Ouput speed	r/min	500	417	300	250	200	166	150	120	100	83	75	60
	Rating torque	N·m	1.78	2.15	2.98	3.58	4.47	5.36	5.96	6.70	8.05	9.66	10.78	12.15
		Kgf·cm	18.2	21.9	30.4	36.5	45.6	54.7	60.8	68.4	82.1	98.6	110.0	124.0
60Hz	Ouput speed	r/min	600	500	360	300	240	200	180	144	120	100	90	72
	Rating torque	N·m	1.43	1.72	2.38	2.86	3.58	4.68	4.76	5.37	6.44	7.72	8.59	9.70
		Kgf·cm	14.6	17.5	24.3	29.2	36.5	43.7	48.6	54.8	65.7	78.8	87.6	99.0

Gear head type: G9B□KH

Frequency	Reduction ratio		30	36	40	50	60	75	90	100	120	150	180	200
50Hz	Ouput speed	r/min	50	41	37	30	25	20	16	15	12	10	8	7.5
	Rating torque	N·m	14.60	17.44	19.40	19.60	19.60	19.60	19.60	19.60	19.60	19.60	19.60	19.60
		Kgf·cm	149.0	178.0	198.0	200.0	200.0	200.0	200.0	200.0	200.0	200.0	200.0	200.0
60Hz	Ouput speed	r/min	60	50	45	36	30	24	20	18	15	12	10	9
	Rating torque	N·m	11.66	14.01	15.48	19.40	19.60	19.60	19.60	19.60	19.60	19.60	19.60	19.60
		Kgf·cm	119.0	143.0	158.0	198.0	200.0	200.0	200.0	200.0	200.0	200.0	200.0	200.0

- □ in gear head type names indicates the reduction ratio.
- When an intermediate gear head is used, the rating torgue is 19.60N · m(200kgf · cm).
- Rotation direction in shaded boxes are in the same direction as the motor rotation. Direction in unshaded boxes are in the opposite direction as the motor rotation.
- Rotation speed don't include motor slippage. The actual values will be between 2 and 20% lower, depending on the load.

Condenser

Fig.1

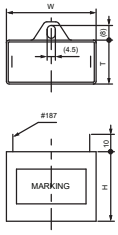

Fig.2

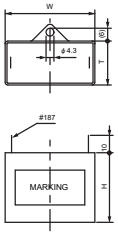

Fig.3

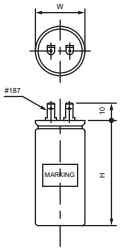

Motor type	Voltage	Capacity	Condenser type	W	T	H	Fig.
	(V)	(μF)		(mm)	(mm)	(mm)	
A9R90AH	1ph100 1ph110	30.0	DAL-253006	φ40	–	65	3
A9R90BH	1ph115	25.0	DMF-252506	58	36	39	1
A9R90CH	1ph200 1ph220	7.0	DMF-45705	50	25	40	1
A9R90DH	1ph220 1ph240	6.0	DMF-45605	50	25	40	1

Dimensions

Gear motors

Motor type : A9R90□H

Gear head type : G9B□KH

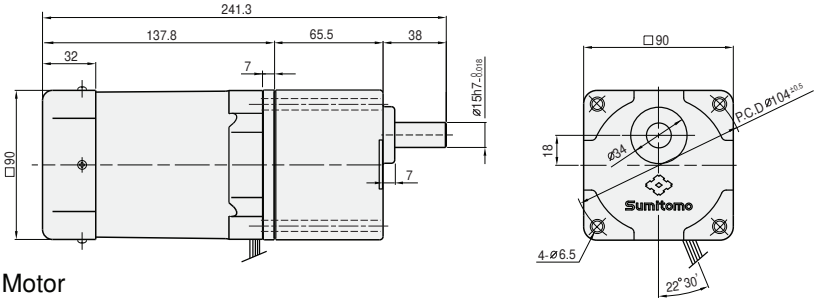

Gear head output shaft detail

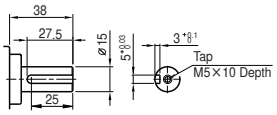

Motor

Type : A9R90□H

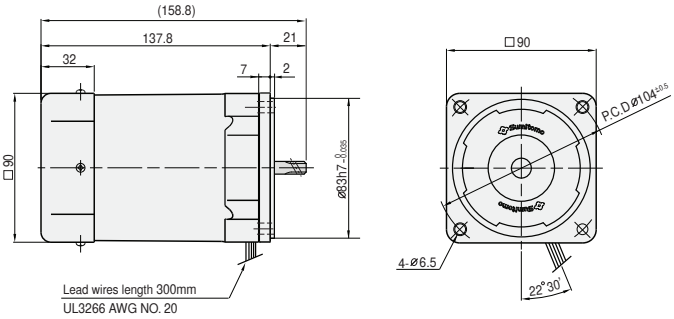

key size

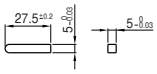

Intermediate gear head

Type: G9BXH10H

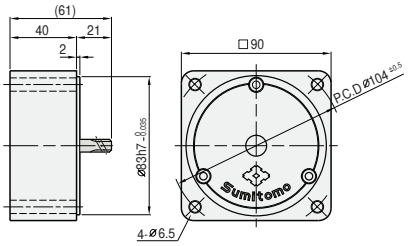

Table1. Weight

		Weight(kg)
Motor		2.93
Gear head	G9B3KH ~ G9B10KH	1.21
	G9B12.5KH ~ G9B20KH	1.30
	G9B25KH ~ G9B60KH	1.40
	G9B75KH ~ G9B200KH	1.45
Intermediate gear head		0.65

Wiring diagram

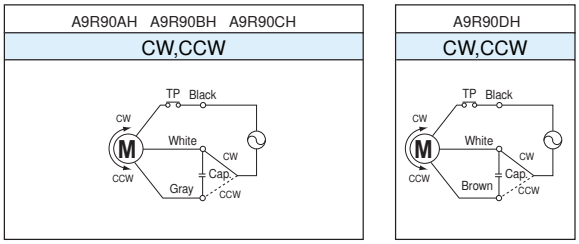

- Rotation directions are the directions as viewed from the end of the motor shaft.

Related information

Selection procedure: p.31

Options: p.169

Standard specifications: p.28

Technical information: p.175

MEMO

BIBUS

BIBUS s.r.o.
+420 547 125 300
www.bibus.cz

Motors with electromagnetic brakes

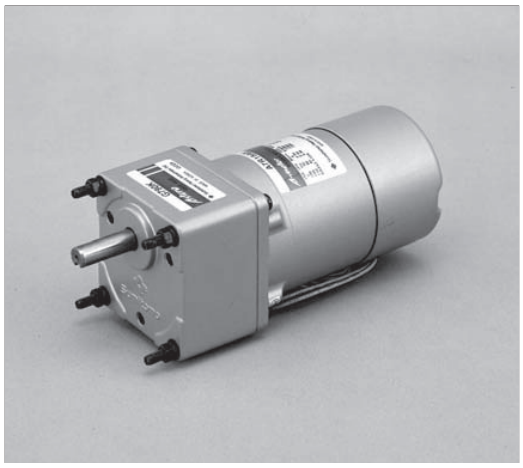

∗Gear head and Motor with electromagnetic brake are sold separately.

Motors with electromagnetic brakes

- Motors with electromagnetic brakes
- Motor can store load after stopping.
- Used for constant-speed operation.
- Electromagnetic brake stops motor instantly.
- Motor must be stopped by electromagnetic brake before the motor operation direction can be switched.
- Lead wires type.
- Time rating: Short-time (30 minutes)

Astero™

Overview
Induction
Reversible
Electromagnetic brakes
Terminal boxes
Speed controller (Overview)
Unit type
Socket type
Speed controller (Induction)
Speed controller (Reversible)
Speed controller (Electro-magnetic brake)
Brake Packs
Options
Technical Information
Overview
6W
15W
25W
40W
60W
90W

Overview of motors with electromagnetic brakes (Standard specifications)

Table 1. Induction motors with electromagnatic brakes standard specifications

	Item	Induction motors with electromagnetic brake	
		Single-phase motor	3-phase motor
Motor	Capacity range	6 ~ 90 W 4 poles	25 ~ 90 W 4 poles
	Protection method Enclosure	6 ~ 40 W: IP23 Totally enclosed, non ventilated type 60 W~: IP23 Totally enclosed fan cooled type	25 ~ 40 W: IP23 Totally enclosed, non ventilated type 60 W~: IP23 Totally-enclosed fan cooled type
	Power source	100V 50/60HZ, 110V 60HZ 115V 60HZ 200V 50/60HZ, 220V 60HZ 220～240V 50HZ	200V 50/60Hz, 220V 50/60Hz 380V 50/60Hz, 400V 50/60Hz, 415V 50/60Hz, 440V 50/60Hz
	Insulation	CE Marking, Class E (120˚C) UL Standard, Class A (105˚C)	CE Marking, Class E (120˚C) UL Standard, Class A (105˚C)
	Time rating	Short-time(30minutes)	Continuous
	Starting method	Condenser running	Direct start
	Lead wires	5wires UL Style 3266 20AWG	5wires UL Style 3271 20AWG
	Standards	CE Marking (Low Voltage Directive), UL Standard	
	Insulation resistance	At least 100 MΩ when measured with a 500 VDC megger between the motor coil and case at normal temperature and humidity after motor has reached rated operation.	
	Insulation withstand voltage	No malfunction when a 1500 V, 50/60 Hz current is applied between the motor coil and case for 1 minute at normal temperature and humidity after the motor has reached rated operation.	
	Temperature rise	The temperature rise value (ΔT) should be no more than 60˚C (no more than 45˚C for motors with fans) when measured by the prescribed method after the motor has reached the rated operation.	
	Overheating protector (TP)	Built-in thermal protector (auto-restore type) Release: 120 ±5˚C, Restore: 77 ±5˚C	
Gear	Lubrication method	Grease lubrication. Grease is loaded at shipment.	
Paint	Color	Astero silver	
Ambient conditions	Locations	Indoors (in minimal dust and humidity)	
	Temperature	-10 to 40˚C	
	Humidity	Under 85%	
	Elevation	Under 1,000 m	
	Atmosphere	Well ventilated location, free of corrosive gases, explosive gases, vapors and dust.	

Overview of motors with electromagnetic brakes (Standard specifications)

1. Structure and operating principle

Figure 1 shows the structure of a motor with an electromagnetic brake. Sumitomo's motors with electromagnetic brakes are a de-energizing type. When voltage is applied to the electromagnetic coil, the armature plate held down by the spring is immediately attracted to it, creating a gap between the armature plate and brake lining, and readying the motor for operation. When the coil voltage is shut off, the armature plate applies the spring pressure to the brake lining, generating a braking force and stopping the motor.

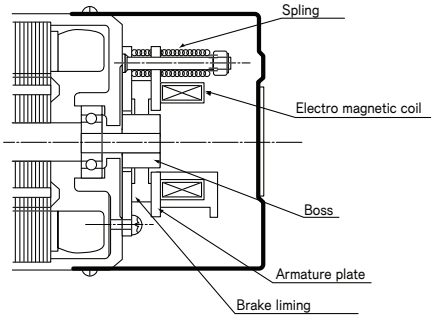

Fig 1. Structure of a motor with an electromagnetic brake.

2. Features of electromagnetic brakes

The brakes are AC de-energizing electromagnetic brakes, and are coupled directly to the motor. When the power is turned OFF, the motor stops instantly and the load is stored. The stored torque is between 0.05 and 0.5 N · m (see Table 1). When the power is turned OFF, the stored power operates, making the brake ideal for use as a safety brake when the power is accidentally shut off. Electromagnetic brake motors have an overrun of 1 to 4 revolutions after the power is turned off with no load.
They can be operated with frequent instant direction switching. A simple switching operation enables 6 stops per minute, but each stop should be at least 3 seconds. The motor and brake units can be operated on the same power supply. A rectifying circuit is built into the brake unit, and it uses the same AC power supply as the motor.

Table2. Electromagnetic brake soecifications

Phase	Frame size (mm)	Output power (W)	Voltage (V)	Frequency (Hz)	Current (A)	Input (W)	Stored torque (N · m)	Stored torque (kgf · cm)	Over run (Rev.)
Single phase	60	6	100 110 115 200 220 240	50/60	0.031	3.1	0.05	0.5	3.5
	70	15					0.10	1.0	
	80	25			0.054	5.4	0.20	2.0	
	90	40			0.100	10.0	0.30	3.0	
		60					0.50	5.0	
		90							
Three phase	80	25	200~220	50/60	0.054	5.4	0.20	2.0	
			380~440		0.031	6.3			
	90	40	200~220		0.100	10.0	0.30	3.0	
			380~440		0.043	8.5			
		60	200~220		0.100	10.0	0.50	5.0	
			380~440		0.043	8.5			
		90	200~220		0.100	10.0			
			380~440		0.043	8.5			

3. Connection method and braking time

Fig. 2 shows the standard connection method. The simple connection method shown in Fig. 3 is also possible. However, this method has a 50 ms longer braking time than the standard method, and a correspondingly longer overrun.

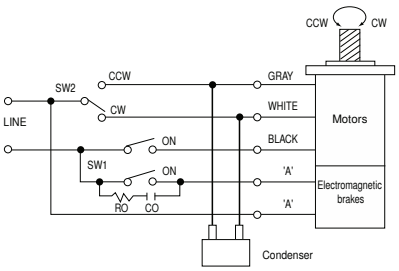

Fig2. Standard connebtion of motors with electromagnetic brakes

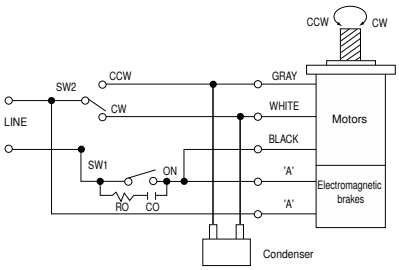

Fig 3. Simple connebtion of motors with electromagnetic brakes

4. Starting time/braking time characteristic

The starting time for motors with electromagnetic brakes consists of the electromagnetic brake's release time added to the starting time of the motor itself. The braking time is the amount of time required for the motor to completely stop after the power is shut off. Brake motor overruns, starting times and braking times vary depending on the combination of equipment in use. Contact us for more information.

6W □60mm Motors with electromagnetic brakes

Motor specification table

Frame size mm sq	Motor Type	Poles	Output	Voltage	Frequency	Time ratiang	Rating torque				Starting torque		Over-heating pro-tection	Standard	Condenser
							Current	Output speed	Torque						
			(W)	(V)	(Hz)		(A)	(r/min)	(N·m)	(Kgf·cm)	(N·m)	(Kgf·cm)			(μF)
60	A6R06AB	4	6	1ph100	50	30Min.	0.21	1200	0.050	0.50	0.050	0.50	ZP	CE	3.0
					60			1450	0.042	0.42					
				1ph110	60		0.23	1500	0.040	0.40	0.065	0.65			
	A6R06BB	4	6	1ph115	60	30Min.	0.17	1550	0.040	0.40	0.058	0.58	ZP	UL/CE	2.3
	A6R06CB	4	6	1ph200	50	30Min.	0.11	1200	0.050	0.50	0.055	0.55	ZP	CE	0.8
					60			1500	0.042	0.42					
				1ph220	60		0.12	1550	0.040	0.40	0.070	0.70			
	A6R06DB	4	6	1ph220	50	30Min.	0.09	1200	0.050	0.50	0.055	0.55	ZP	CE	0.7
				1ph240			0.10		0.052	0.52	0.065	0.65			

- The capacitor condenser depends on the voltage in use. Be sure to use the correct capacity for the voltage.
- The use of an incorrect condenser capacity can cause malfunctions. To ensure that you order the correct model, check the voltage in use before ordering.
- All the motor types in the table above are CE Mark and thermal protected (TP) is built in the coil.

Gear head rating torque table

Gear head type: G6□D

Frequency	Reduction ratio		3	3.6	5	6	7.5	9	10	12.5	15	18	20	25
50Hz	Ouput speed	r/min	500	417	300	250	200	166	150	120	100	83	75	60
	Rating torque	N·m	0.13	0.15	0.21	0.26	0.31	0.38	0.42	0.53	0.63	0.76	0.76	0.95
		Kgf·cm	1.3	1.5	2.1	2.6	3.2	3.9	4.3	5.4	6.4	7.7	7.7	9.7
60Hz	Ouput speed	r/min	600	500	360	300	240	200	180	144	120	100	90	72
	Rating torque	N·m	0.10	0.13	0.17	0.21	0.26	0.30	0.34	0.43	0.51	0.62	0.62	0.76
		Kgf·cm	1.0	1.3	1.7	2.1	2.6	3.1	3.5	4.4	5.2	6.3	6.3	7.8

Gear head type: G6□D

Frequency	Reduction ratio		30	36	40	50	60	75	90	100	120	150	180	200
50Hz	Ouput speed	r/min	50	41	37	30	25	20	16	15	12	10	8	7.5
	Rating torque	N·m	1.14	1.36	1.52	1.72	2.06	2.57	2.94	2.94	2.94	2.94	2.94	2.94
		Kgf·cm	11.6	13.9	15.5	17.5	21.0	26.2	30.0	30.0	30.0	30.0	30.0	30.0
60Hz	Ouput speed	r/min	60	50	45	36	30	24	20	18	15	12	10	9
	Rating torque	N·m	0.92	1.11	1.24	1.39	1.67	2.09	2.50	2.78	2.94	2.94	2.94	2.94
		Kgf·cm	9.4	11.3	12.6	14.2	17.0	21.3	25.5	28.4	30.0	30.0	30.0	30.0

- □ in gear head type names indicates the reduction ratio.
- Intermediate gear heads are for use with gear heads having a reduction ratio of 30 or more. When an intermediate gear head is used, the rating torque is 1.96 N•m (20 kgf•cm) for a reduction ratio between 30 and 40, and 2.94 N•m (30 kgf•cm) for a reduction ratio of 50 or more.
- Rotation direction in shaded boxes are in the same direction as the motor rotation. Direction in unshaded boxes are in the opposite direction as the motor rotation.
- Rotation speed don't include motor slippage. The actual values will be between 2 and 20% lower, depending on the load.

Condenser

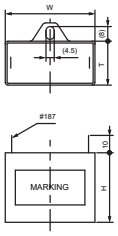

Motor type	Voltage	Capacity	Condenser type	W	T	H
	(V)	(μF)		(mm)	(mm)	(mm)
A6R06A B	1ph100 1ph110	3.0	DMF-25305	36	16	25
A6R06B B	1ph115	2.3	DMF-25235	36	16	25
A6R06C B	1ph200 1ph220	0.8	DMF-45804	36	16	25
A6R06D B	1ph220 1ph240	0.7	DMF-45704	36	16	25

Dimensions

Gear motors

Motor type : A6R06□B

Gear head type : G6□D

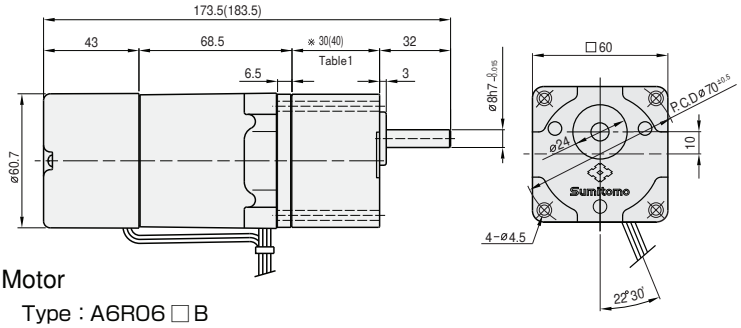

Gear head output shaft detail

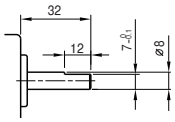

Motor

Type : A6R06□B

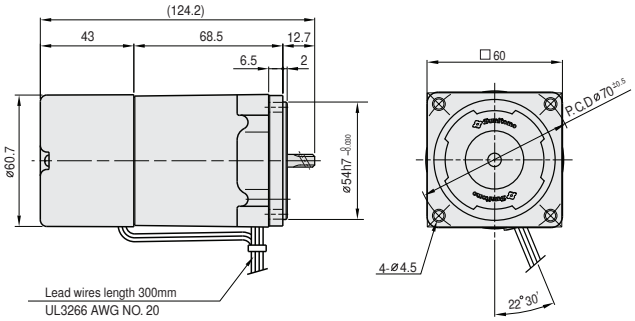

Intermediate gear head

Type: G6XH10

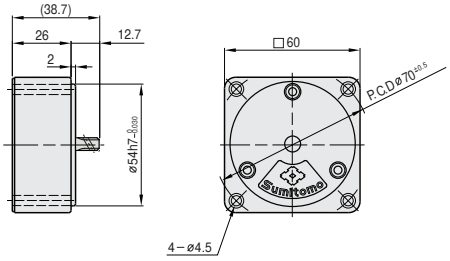

Table1. Gear head length

Gear head size	Length(mm)
G63D～G618D	30
G620D～G6200D	40

Table2. Weight

		Weight(kg)
Motor		0.95
Gear head	G63D ～ G618D	0.24
	G620D ～ G640D	0.30
	G650D ～ G6200D	0.33
Intermediate gear head		0.18

Wiring diagram

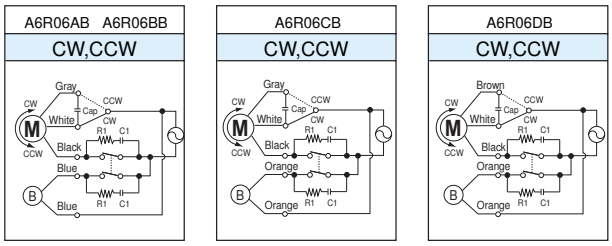

- Rotation directions are the directions as viewed from the end of the motor shaft.
- R_1=10 to 200 Ω (1/4W or larger)
- C_1=0.1 to 0.33 μF (125VAC or 250VAC)

Related information

Selection procedure: p. 11

Options: p. 169

Standard specifications: p. 48

Technical information: p. 175

15W □70mm Motors with electromagnetic brakes

Motor specification table

Frame size mm sq	Motor Type	Poles	Output (W)	Voltage (V)	Frequency (Hz)	Time ratiang	Rating torque: Current (A)	Rating torque: Output speed (r/min)	Rating torque: Torque (N·m)	Rating torque: Torque (Kgf·cm)	Starting torque (N·m)	Starting torque (Kgf·cm)	Over-heating pro-tection	Standard	Condenser (μF)
70	A7R15AB	4	15	1ph100	50	30Min.	0.44	1200	0.125	1.25	0.100	1.00	TP	CE	6. 0
					60		0.44	1500	0.100	1.00	0.100	1.00			
				1ph110	60		0.46	1550	0.100	1.00	0.125	1.25			
	A7R15BB	4	15	1ph115	60	30Min.	0.34	1600	0.100	1.00	0.100	1.00	TP	UL/CE	4.5
	A7R15CB	4	15	1ph200	50	30Min.	0.22	1250	0.125	1.25	0.100	1.00	TP	CE	1. 5
					60		0.22	1550	0.100	1.00	0.100	1.00			
				1ph220	60		0.23	1600	0.100	1.00	0.120	1.20			
	A7R15DB	4	15	1ph220	50	30Min.	0.17	1200	0.125	1.25	0.100	1.00	TP	CE	1. 2
				1ph240			0.18		0.145	1.45	0.120	1.20			

- The capacitor condenser depends on the voltage in use. Be sure to use the correct capacity for the voltage.
- The use of an incorrect condenser capacity can cause malfunctions. To ensure that you order the correct model, check the voltage in use before ordering.
- All the motor types in the table above are CE Mark and thermal protected (TP) is built in the coil.

Gear head rating torque table

Gear head type: G7□K

Frequency	Reduction ratio		3	3.6	5	6	7.5	9	10	12.5	15	18	20	25
50Hz	Ouput speed	r/min	500	417	300	250	200	166	150	120	100	83	75	60
	Rating torque	N·m	0.31	0.38	0.53	0.64	0.79	0.95	1.06	1.32	1.59	1.90	1.90	2.37
		Kgf·cm	3.2	3.9	5.4	6.5	8.1	9.7	10.8	13.5	16.2	19.4	19.4	24.2
60Hz	Ouput speed	r/min	600	500	360	300	240	200	180	144	120	100	90	72
	Rating torque	N·m	0.29	0.35	0.50	0.60	0.75	0.89	0.99	1.25	1.49	1.79	1.79	2.24
		Kgf·cm	3.0	3.6	5.1	6.1	7.6	9.1	10.1	12.7	15.2	18.2	18.2	22.8

Gear head type: G7□K

Frequency	Reduction ratio		30	36	40	50	60	75	90	100	120	150	180	200
50Hz	Ouput speed	r/min	50	41	37	30	25	20	16	15	12	10	8	7.5
	Rating torque	N·m	2.85	3.42	3.81	4.28	4.90	4.90	4.90	4.90	4.90	4.90	4.90	4.90
		Kgf·cm	29.1	34.9	38.8	43.6	50.0	50.0	50.0	50.0	50.0	50.0	50.0	50.0
60Hz	Ouput speed	r/min	60	50	45	36	30	24	20	18	15	12	10	9
	Rating torque	N·m	2.68	3.22	3.58	4.02	4.83	4.90	4.90	4.90	4.90	4.90	4.90	4.90
		Kgf·cm	27.3	32.8	36.5	41.0	49.2	50.0	50.0	50.0	50.0	50.0	50.0	50.0

- □ in gear head type names indicates the reduction ratio.
- Intermediate gear heads are for use with gear heads having a reduction ratio of 25 or more. When an intermediate gear head is used, the rating torque is 3.92 N•m (40 kgf•cm) for a reduction ratio between 25 and 40, and 4.90 N•m (50 kgf•cm) for a reduction ratio of 50 or more.
- Rotation direction in shaded boxes are in the same direction as the motor rotation. Direction in unshaded boxes are in the opposite direction as the motor rotation.
- Rotation speed don't include motor slippage. The actual values will be between 2 and 20% lower, depending on the load.

Condenser

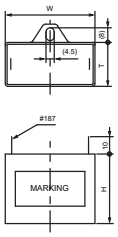

Motor type	Voltage (V)	Capacity (μF)	Condenser type	W (mm)	T (mm)	H (mm)
A7R15A B	1ph100	6.0	DMF-25605	38	19	29
	1ph110					
A7R15B B	1ph115	4.5	DMF-25455	38	19	29
A7R15C B	1ph200	1.5	DMF-45155	36	16	25
	1ph220					
A7R15D B	1ph220	1.2	DMF-45125	36	16	25
	1ph240					

Dimensions

Gear motors

Motor type ：A7R15□B
Gear head type ：G7□K

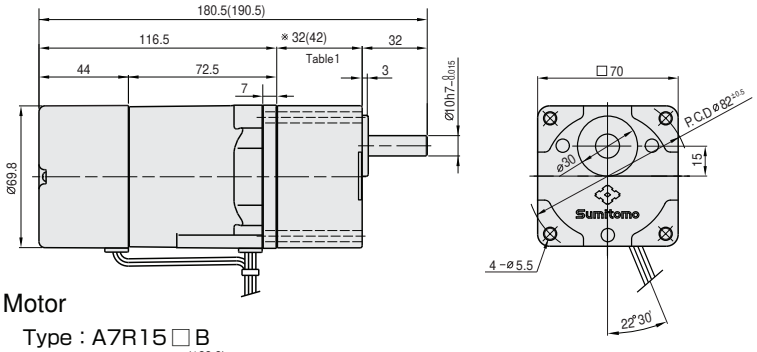

Gear head output shaft detail

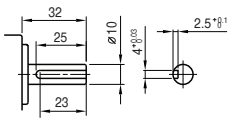

Motor

Type：A7R15□B

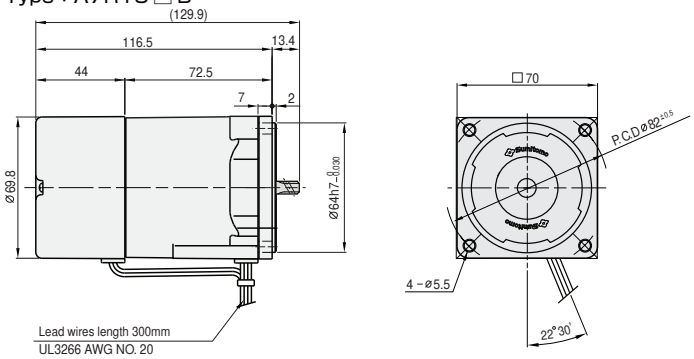

key size

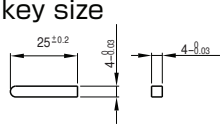

Intermediate gear head

Type: G7XH10

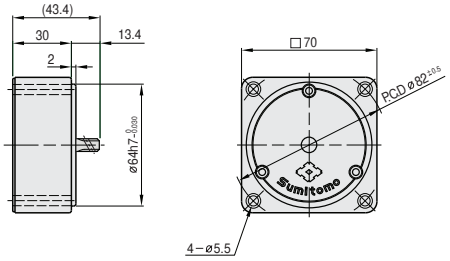

Table1. Gear head length

Gear head size	Length(mm)
G73K～G718K	32
G720K～G7200K	42

Table2. Weight

		Weight(kg)
Motor		1.30
Gear head	G73K ～ G718K	0.38
	G720K ～ G740K	0.47
	G750K ～ G7200K	0.52
Intermediate gear head		0.32

Wiring diagram

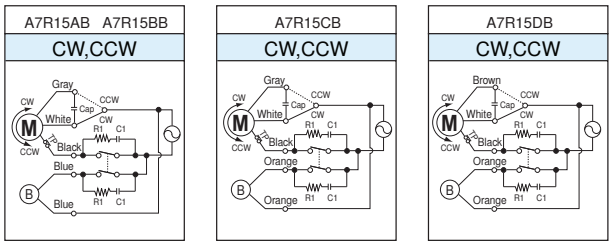

- Rotation directions are the directions as viewed from the end of the motor shaft.
- R_1=10 to 200 Ω（1/4W or larger）
- C_1=0.1 to 0.33 μF（125VAC or 250VAC）

Related information

Selection procedure: p. 11
Options: p. 169
Standard specifications: p. 48
Technical information: p. 175

25W □80mm Motors with electromagnetic brakes

Motor specification table

Frame size mm sq	Motor Type	Poles	Output	Voltage	Frequency	Time ratiang	Rating torque Current	Rating torque Output speed	Rating torque Torque		Starting torque		Over-heating pro-tection	Standard	Condenser
			(W)	(V)	(Hz)		(A)	(r/min)	(N·m)	(Kgf·cm)	(N·m)	(Kgf·cm)			(μF)
80	A8R25AB	4	25	1ph100	50	30Min.	0.60	1250	0.200	2.00	0.220	2.20	TP	CE	10.0
					60		0.70	1500	0.170	1.70					
				1ph110	60		0.73	1550	0.162	1.62	0.240	2.40			
	A8R25BB	4	25	1ph115	60	30Min.	0.52	1600	0.165	1.65	0.190	1.90	TP	UL/CE	7.0
	A8R25CB	4	25	1ph200	50	30Min.	0.30	1250	0.200	2.00	0.200	2.00	TP	CE	2. 5
					60		0.35	1500	0.170	1.70					
				1ph220	60		0.36	1550	0.162	1.62	0.240	2.40			
	A8R25DB	4	25	1ph220	50	30Min.	0.25	1250	0.200	2.00	0.210	2.10	TP	CE	2.0
				1ph240			0.27		0.210	2.10	0.250	2.50			
	A8M25JB	4	25	3ph200	50	Cont.	0.25	1300	0.195	1.95	0.340	3.40	TP	CE	—
					60		0.22	1550	0.165	1.65	0.270	2.70			
				3ph220	50		0.26	1350	0.190	1.90	0.410	4.10			
					60		0.23	1600	0.160	1.60	0.320	3.20			
	A8M25KB	4	25	3ph380	50	Cont.	0.14	1250	0.200	2.00	0.315	3.15	TP	CE	—
					60		0.12	1500	0.170	1.70	0.250	2.50			
				3ph400	50	Cont.	0.14	1250	0.210	2.10	0.350	3.50	TP	CE	
					60		0.12	1500	0.180	1.80	0.275	2.75			
				3ph415	50	Cont.	0.15	1300	0.195	1.95	0.375	3.75	TP	CE	
					60		0.13	1550	0.165	1.65	0.300	3.00			
				3ph440	50	Cont.	0.15	1300	0.210	2.10	0.440	4.40	TP	CE	
					60		0.13	1600	0.160	1.60	0.340	3.40			

- The capacitor condenser depends on the voltage in use. Be sure to use the correct capacity for the voltage.
- The use of an incorrect condenser capacity can cause malfunctions. To ensure that you order the correct model, check the voltage in use before ordering.
- All the motor types in the table above are CE Mark and thermal protected (TP) is built in the coil.

Gear head rating torque table

Gear head type: G8□K

Frequency	Reduction ratio		3	3.6	5	6	7.5	9	10	12.5	15	18	20	25
50Hz	Ouput speed	r/min	500	417	300	250	200	166	150	120	100	83	75	60
	Rating torque	N·m	0.52	0.63	0.87	1.05	1.31	1.57	1.74	2.19	2.62	3.15	3.15	3.94
		Kgf·cm	5.3	6.4	8.9	10.7	13.4	16.0	17.8	22.3	26.7	32.1	32.1	40.2
60Hz	Ouput speed	r/min	600	500	360	300	240	200	180	144	120	100	90	72
	Rating torque	N·m	0.43	0.51	0.72	0.85	1.07	1.28	1.43	1.78	2.15	2.57	2.58	3.22
		Kgf·cm	4.4	5.2	7.3	8.7	10.9	13.1	14.6	18.2	21.9	26.2	26.3	32.9

Gear head type: G8□K

Frequency	Reduction ratio		30	36	40	50	60	75	90	100	120	150	180	200
50Hz	Ouput speed	r/min	50	41	37	30	25	20	16	15	12	10	8	7.5
	Rating torque	N·m	4.72	5.66	6.29	7.12	7.84	7.84	7.84	7.84	7.84	7.84	7.84	7.84
		Kgf·cm	48.2	57.8	64.2	72.6	80.0	80.0	80.0	80.0	80.0	80.0	80.0	80.0
60Hz	Ouput speed	r/min	60	50	45	36	30	24	20	18	15	12	10	9
	Rating torque	N·m	3.86	4.64	5.16	5.82	6.99	7.84	7.84	7.84	7.84	7.84	7.84	7.84
		Kgf·cm	39.4	47.3	52.6	59.4	71.3	80.0	80.0	80.0	80.0	80.0	80.0	80.0

- □ in gear head type names indicates the reduction ratio.
- Intermediate gear heads are for use with gear heads having a reduction ratio of 25 or more. When an intermediate gear head is used, the rating torque is 5.88 N•m (60 kgf•cm) for a reduction ratio between 25 and 40, and 7.84 N•m (80 kgf•cm) for a reduction ratio of 50 or more.
- Rotation direction in shaded boxes are in the same direction as the motor rotation. Direction in unshaded boxes are in the opposite direction as the motor rotation.
- Rotation speed don't include motor slippage. The actual values will be between 2 and 20% lower, depending on the load.

Condenser

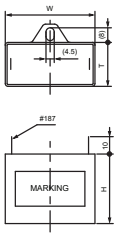

Motor type	Voltage	Capacity	Condenser type	W	T	H
	(V)	(μF)		(mm)	(mm)	(mm)
A8R25A B	1ph100	10.0	DMF-251006	47	19	28
	1ph110					
A8R25B B	1ph115	7.0	DMF-25705	48	21	33
A8R25C B	1ph200	2.5	DMF-45255	47	19	28
	1ph220					
A8R25D B	1ph220	2.0	DMF-45205	38	19	29
	1ph240					

Dimensions

Gear motors

Motor type : A8 M/R 25 □ B

Gear head type : G8 □ K

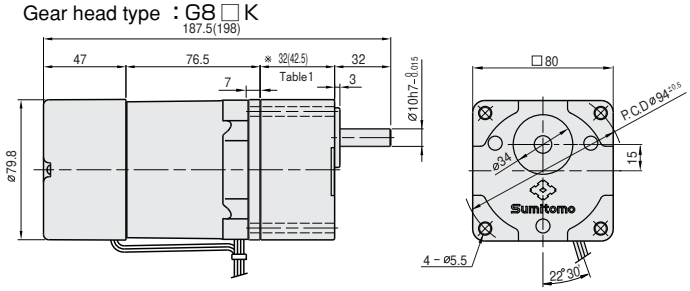

Gear head output shaft detail

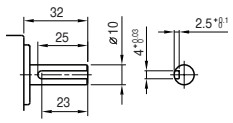

key size

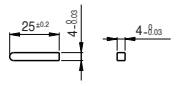

Motor

Ttype : A8 M/R 25 □ B

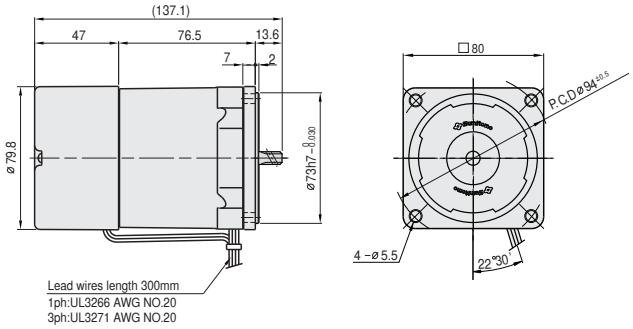

Intermediate gear head

Type: G8XH10

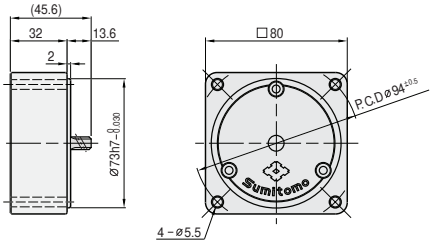

Table1. Gear head length

Gear head size	Length (mm)
G83K ～G818K	32
G820K ～G8200K	42.5

Table2. Weight

		Weight(kg)
Motor		1.86
Gear head	G83K ～ G818K	0.43
	G820K ～ G840K	0.57
	G850K ～ G8200K	0.61
Intermediate gear head		0.43

Wiring diagram

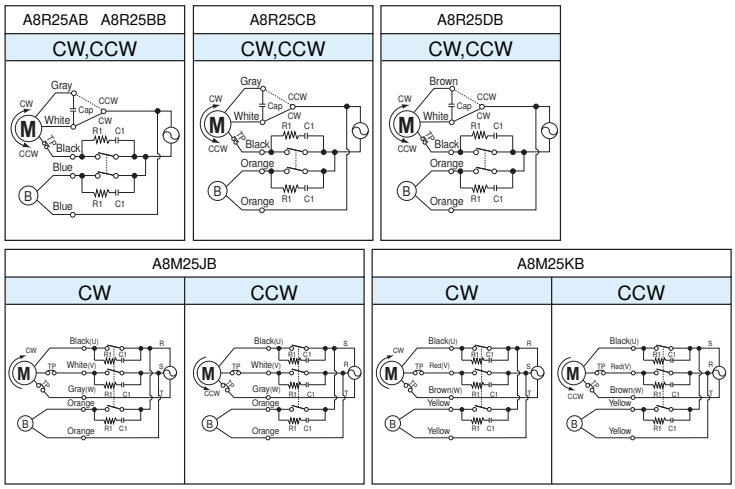

- Rotation directions are the directions as viewed from the end of the motor shaft.
- R_1=10 to 200 Ω (1/4W or larger)
- C_1=0.1 to 0.33 μF (125VAC or 250VAC)

Related information

Selection procedure: p. 11

Options: p. 169

Standard specifications: p. 48

Technical information: p. 175

40W □90mm

Motors with electromagnetic brakes

Motor specification table

Frame size mm sq	Motor Type	Poles	Output	Voltage	Frequency	Time ratiang	Rating torque				Starting torque		Over-heating pro-tection	Standard	Condenser
							Current	Output speed	Torque						
			(W)	(V)	(Hz)		(A)	(r/min)	(N·m)	(Kgf·cm)	(N·m)	(Kgf·cm)			(μF)
90	A9R40AB	4	40	1ph100	50	30Min.	0.85	1300	0.310	3.10	0.350	3.50	TP	CE	15.0
					60		1.00	1550	0.260	2.60					
				1ph110	60		1.00	1600	0.250	2.50	0.400	4.00			
	A9R40BB	4	40	1ph115	60	30Min.	0.86	1600	0.260	2.60	0.345	3.45	TP	UL/CE	12.0
	A9R40CB	4	40	1ph200	50	30Min.	0.40	1300	0.310	3.10	0.335	3.35	TP	CE	3. 5
					60		0.48	1550	0.260	2.60					
				1ph220	60		0.48	1600	0.250	2.50	0.400	4.00			
	A9R40DB	4	40	1ph220	50	30Min.	0.40	1250	0.320	3.20	0.330	3.30	TP	CE	3.0
				1ph240			0.43		0.340	3.40	0.400	4.00			
	A9M40JB	4	40	3ph200	50	Cont.	0.30	1300	0.310	3.10	0.630	6.30	TP	CE	—
					60		0.28	1550	0.260	2.60	0.520	5.20			
				3ph220	50	Cont.	0.30	1350	0.300	3.00	0.760	7.60			
					60		0.28	1600	0.250	2.50	0.610	6.10			
	A9M40KB	4	40	3ph380	50	Cont.	0.21	1300	0.320	3.20	0.630	6.30	TP	CE	—
					60		0.19	1550	0.270	2.70	0.485	4.85			
				3ph400	50	Cont.	0.21	1300	0.330	3.30	0.690	6.90	TP	CE	
					60		0.19	1550	0.280	2.80	0.525	5.25			
				3ph415	50	Cont.	0.21	1350	0.310	3.10	0.730	7.30	TP	CE	
					60		0.19	1600	0.260	2.60	0.570	5.70			
				3ph440	50	Cont.	0.21	1350	0.320	3.20	0.820	8.20	TP	CE	
					60		0.19	1600	0.270	2.70	0.630	6.30			

- The capacitor condenser depends on the voltage in use. Be sure to use the correct capacity for the voltage.
- The use of an incorrect condenser capacity can cause malfunctions. To ensure that you order the correct model, check the voltage in use before ordering.
- All the motor types in the table above are CE Mark and thermal protected (TP) is built in the coil.

Gear head rating torque table

Gear head type: G9A□K

Frequency	Reduction ratio		3	3.6	5	6	7.5	9	10	12.5	15	18	20	25
50Hz	Ouput speed	r/min	500	417	300	250	200	166	150	120	100	83	75	60
	Rating torque	N·m	0.81	0.97	1.35	1.62	2.03	2.43	2.70	3.37	4.05	4.86	4.86	6.09
		Kgf·cm	8.3	9.9	13.8	16.5	20.7	24.8	27.5	34.4	41.3	49.6	49.6	62.1
60Hz	Ouput speed	r/min	600	500	360	300	240	200	180	144	120	100	90	72
	Rating torque	N·m	0.67	0.80	1.11	1.33	1.67	2.00	2.23	2.78	3.33	4.00	4.01	5.01
		Kgf·cm	6.8	8.2	11.3	13.6	17.0	20.4	22.7	28.4	34.0	40.8	40.9	51.1

Gear head type: G9A□K

Frequency	Reduction ratio		30	36	40	50	60	75	90	100	120	150	180	200
50Hz	Ouput speed	r/min	50	41	37	30	25	20	16	15	12	10	8	7.5
	Rating torque	N·m	7.30	8.76	9.73	9.80	9.80	9.80	9.80	9.80	9.80	9.80	9.80	9.80
		Kgf·cm	74.5	89.4	99.3	100.0	100.0	100.0	100.0	100.0	100.0	100.0	100.0	100.0
60Hz	Ouput speed	r/min	60	50	45	36	30	24	20	18	15	12	10	9
	Rating torque	N·m	6.01	7.21	8.02	9.80	9.80	9.80	9.80	9.80	9.80	9.80	9.80	9.80
		Kgf·cm	61.3	73.6	81.8	100.0	100.0	100.0	100.0	100.0	100.0	100.0	100.0	100.0

- □ in gear head type names indicates the reduction ratio.
- When an intermediate gear head is used, the rating torque is 9.80N · m(100kgf · cm).
- Rotation direction in shaded boxes are in the same direction as the motor rotation. Direction in unshaded boxes are in the opposite direction as the motor rotation.
- Rotation speed don't include motor slippage. The actual values will be between 2 and 20% lower, depending on the load.

Condenser

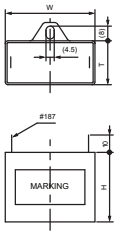

Motor type	Voltage	Capacity	Condenser type	W	T	H
	(V)	(μF)		(mm)	(mm)	(mm)
A9R40A B	1ph100	15.0	DMF-251506	50	25	40
	1ph110					
A9R40B B	1ph115	12.0	DMF-251206	48	21	33
A9R40C B	1ph200	3.5	DMF-45355	48	21	33
	1ph220					
A9R40D B	1ph220	3.0	DMF-45305	47	19	28
	1ph240					

Dimensions

Gear motors

Motor type : A9 M/R 40 □ B

Gear head type : G9A □ K

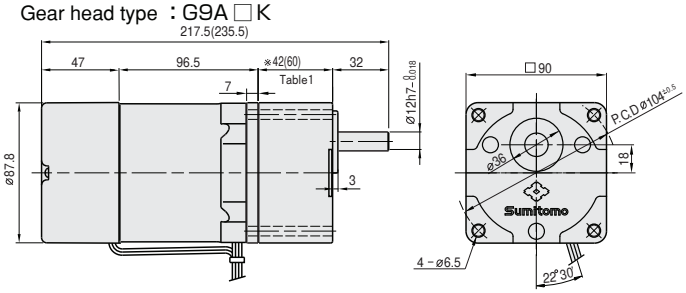

Gear head output shaft detail

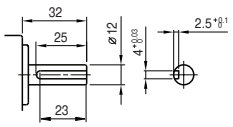

key size

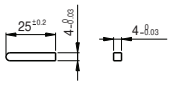

Motor

Type : A9 M/R 40 □ B

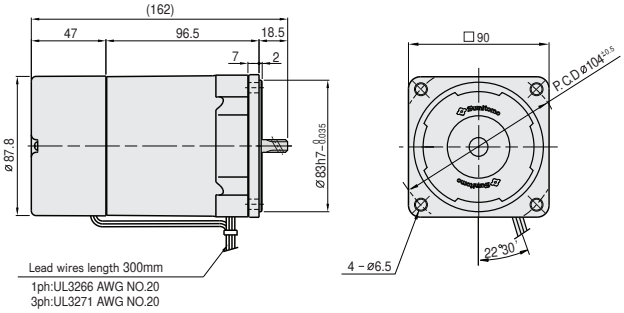

Intermediate gear head

Type: G9AXH10

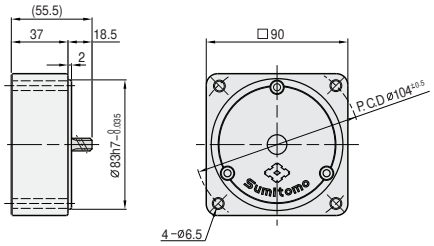

Table1. Gear head length

Gear head size	Length(mm)
G9A3K～G9A18K	42
G9A20K～G9A200K	60

Table2. Weight

		Weight(kg)
Motor		2.74
Gear head	G9A3K ～ G9A18K	0.73
	G9A20K ～ G9A40K	1.03
	G9A50K ～ G9A200K	1.13
Intermediate gear head		0.60

Wiring diagram

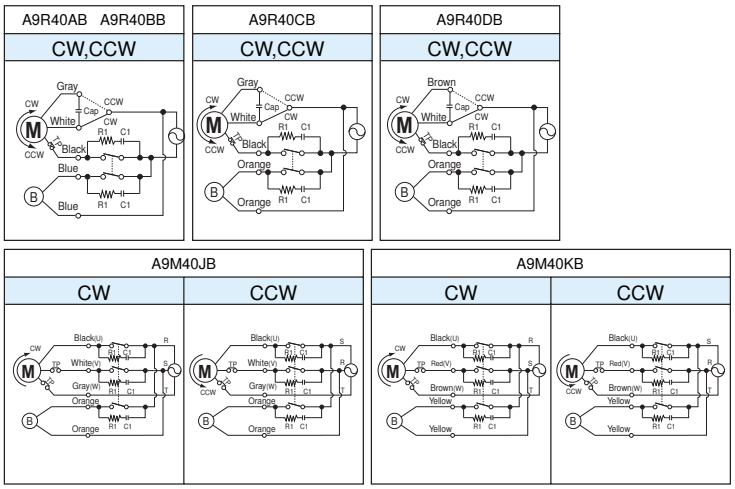

- Rotation directions are the directions as viewed from the end of the motor shaft.
- R_1=10 to 200 Ω (1/4W or larger)
- C_1=0.1 to 0.33 μF (125VAC or 250VAC)

Related information

Selection procedure: p. 11

Options: p. 169

Standard specifications: p. 48

Technical information: p. 175

60W □90mm Motors with electromagnetic brakes

Motor specification table

Frame size mm sq	Motor Type	Poles	Output (W)	Voltage (V)	Frequency (Hz)	Time ratiang	Rating torque: Current (A)	Rating torque: Output speed (r/min)	Rating torque: Torque (N·m)	Rating torque: Torque (Kgf·cm)	Starting torque (N·m)	Starting torque (Kgf·cm)	Over-heating pro-tection	Standard	Condenser (μF)
90	A9R60AHB	4	60	1ph100	50	30Min.	1.50	1250	0.480	4.80	0.620	6.20	TP	CE	25.0
					60		1.75	1500	0.400	4.00					
				1ph110	60		1.70	1550	0.390	3.90	0.700	7.00			
	A9R60BHB	4	60	1ph115	60	30Min.	1.40	1600	0.390	3.90	0.580	5.80	TP	UL/CE	20.0
	A9R60CHB	4	60	1ph200	50	30Min.	0.75	1250	0.480	4.80	0.620	6.20	TP	CE	6. 5
					60		0.90	1500	0.400	4.00					
				1ph220	60		0.90	1550	0.390	3.90	0.700	7.00			
	A9R60DHB	4	60	1ph220	50	30Min.	0.58	1300	0.460	4.60	0.600	6.00	TP	CE	5.0
				1ph240			0.61		0.490	4.90	0.700	7.00			
	A9M60JHB	4	60	3ph200	50	Cont.	0.46	1300	0.460	4.60	0.710	7.10	TP	CE	—
					60		0.42	1550	0.390	3.90	0.540	5.40			
				3ph220	50	Cont.	0.46	1350	0.440	4.40	0.860	8.60	TP	CE	—
					60		0.41	1600	0.390	3.90	0.680	6.80			
	A9M60KHB	4	60	3ph380	50	Cont.	0.27	1300	0.460	4.60	0.825	8.25	TP	CE	—
					60		0.24	1550	0.390	3.90	0.650	6.50			
				3ph400	50	Cont.	0.29	1300	0.470	4.70	0.930	9.30	TP	CE	
					60		0.25	1550	0.400	4.00	0.735	7.35			
				3ph415	50	Cont.	0.27	1350	0.460	4.60	0.995	9.95	TP	CE	
					60		0.23	1600	0.380	3.80	0.750	7.50			
				3ph440	50	Cont.	0.31	1350	0.470	4.70	1.075	10.75	TP	CE	
					60		0.26	1600	0.390	3.90	0.840	8.40			

- The capacitor condenser depends on the voltage in use. Be sure to use the correct capacity for the voltage.
- The use of an incorrect condenser capacity can cause malfunctions. To ensure that you order the correct model, check the voltage in use before ordering.
- All the motor types in the table above are CE Mark and thermal protected (TP) is built in the coil.

Gear head rating torque table

Gear head type: G 9 B □ K H

Frequency	Reduction ratio		3	3.6	5	6	7.5	9	10	12.5	15	18	20	25
50Hz	Ouput speed	r/min	500	417	300	250	200	166	150	120	100	83	75	60
	Rating torque	N·m	1.20	1.43	1.99	2.38	2.99	3.58	3.97	4.47	5.37	6.44	7.15	8.09
		Kgf·cm	12.2	14.6	20.3	24.3	30.4	36.5	40.5	45.6	54.8	65.7	73.0	82.5
60Hz	Ouput speed	r/min	600	500	360	300	240	200	180	144	120	100	90	72
	Rating torque	N·m	0.95	1.15	1.59	1.90	2.38	2.86	3.18	3.58	4.29	5.16	5.72	6.47
		Kgf·cm	9.7	11.7	16.2	19.4	24.3	29.2	32.4	36.5	43.8	52.6	58.4	66.0

Gear head type: G 9 B □ K H

Frequency	Reduction ratio		30	36	40	50	60	75	90	100	120	150	180	200
50Hz	Ouput speed	r/min	50	41	37	30	25	20	16	15	12	10	8	7.5
	Rating torque	N·m	9.70	11.66	12.94	16.17	19.40	19.60	19.60	19.60	19.60	19.60	19.60	19.60
		Kgf·cm	99.0	119.0	132.0	165.0	198.0	200.0	200.0	200.0	200.0	200.0	200.0	200.0
60Hz	Ouput speed	r/min	60	50	45	36	30	24	20	18	15	12	10	9
	Rating torque	N·m	7.76	9.31	10.39	12.94	15.48	17.35	19.60	19.60	19.60	19.60	19.60	19.60
		Kgf·cm	79.2	95.0	106.0	132.0	158.0	177.0	200.0	200.0	200.0	200.0	200.0	200.0

- □ in gear head type names indicates the reduction ratio.
- When an intermediate gear head is used, the rating torgue is 19.60N · m(200kgf · cm)
- Rotation direction in shaded boxes are in the same direction as the motor rotation. Direction in unshaded boxes are in the opposite direction as the motor rotation.
- Rotation speed don't include motor slippage. The actual values will be between 2 and 20% lower, depending on the load.

Condenser

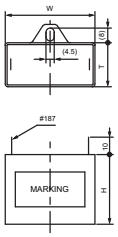

Motor type	Voltage (V)	Capacity (μF)	Condenser type	W (mm)	T (mm)	H (mm)
A9R60AH B	1ph100 1ph110	25.0	DMF-252506	58	36	39
A9R60BH B	1ph115	20.0	DMF-252006	58	36	39
A9R60CH B	1ph200 1ph220	6.5	DMF-45655	50	25	40
A9R60DH B	1ph220 1ph240	5.0	DMF-45505	50	25	40

Dimensions

Gear motors

Motor type : A9 M 60 □ HB

Gear head type : G9B □ KH

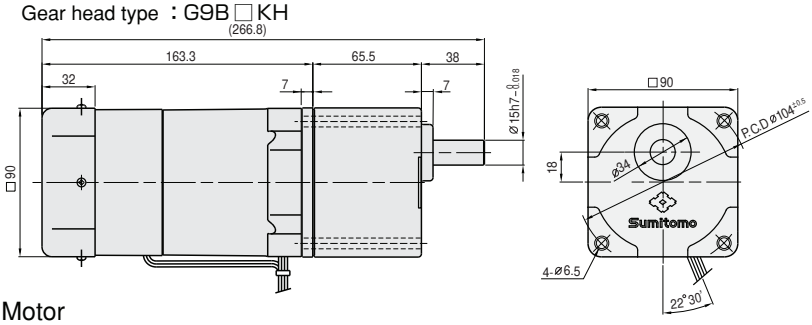

Gear head output shaft detail

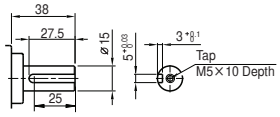

key size

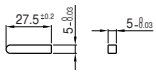

Motor

Type : A9 M 60 □ HB

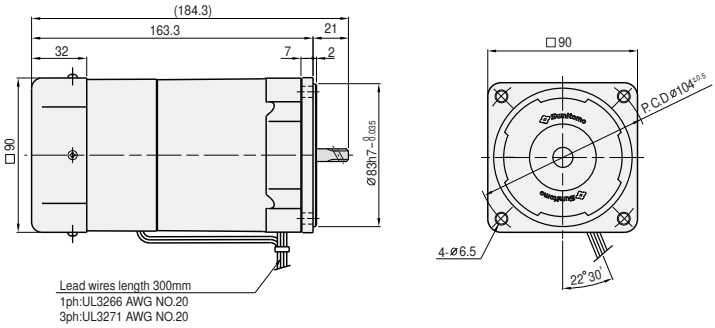

Intermediate gear head

Type: G9BXH10H

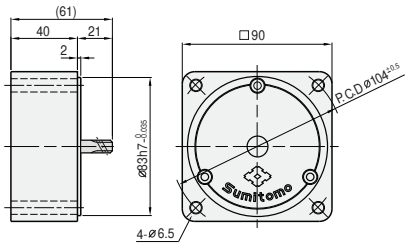

Table1. Weight

		Weight(kg)
Motor		2.90
Gear head	G9B3KH ~ G9B10KH	1.21
	G9B12.5KH ~ G9B20KH	1.30
	G9B25KH ~ G9B60KH	1.40
	G9B75KH ~ G9B200KH	1.45
Intermediate gear head		0.65

Wiring diagram

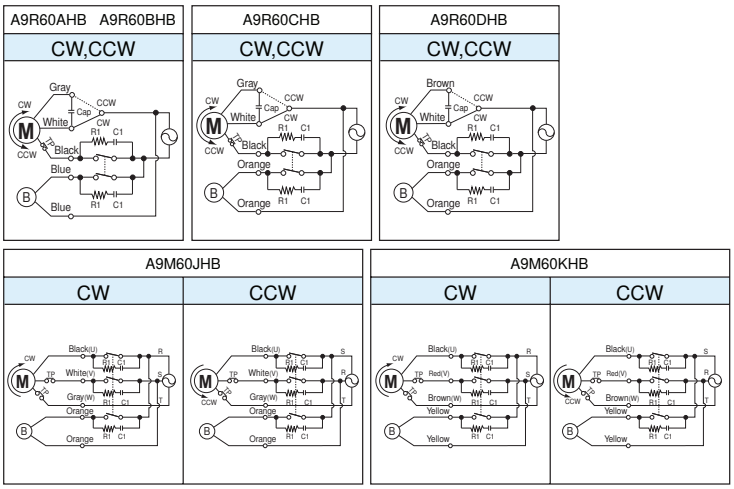

- Rotation directions are the directions as viewed from the end of the motor shaft.
- R_1=10 to 200 Ω (1/4W or larger)
- C_1=0.1 to 0.33 μF (125VAC or 250VAC)

Related information

Selection procedure: p. 11

Options: p. 169

Standard specifications: p. 48

Technical information: p. 175

90W □90mm Motors with electromagnetic brakes

Motor specification table

Frame size mm sq	Motor Type	Poles	Output (W)	Voltage (V)	Frequency (Hz)	Time ratiang	Rating torque: Current (A)	Rating torque: Output speed (r/min)	Rating torque: Torque (N·m)	Rating torque: Torque (Kgf·cm)	Starting torque (N·m)	Starting torque (Kgf·cm)	Over-heating pro-tection	Standard	Condenser (μF)
90	A9R90AHB	4	90	1ph100	50	30Min.	2.00	1250	0.720	7.20	0.700	7.00	TP	CE	30.0
					60		2.25	1500	0.600	6.00					
				1ph110	60		2.20	1550	0.580	5.80	0.890	8.90			
	A9R90BHB	4	90	1ph115	60	30Min.	1.90	1600	0.580	5.80	0.690	6.90	TP	UL/CE	25.0
	A9R90CHB	4	90	1ph200	50	30Min.	0.90	1250	0.720	7.20	0.700	7.00	TP	CE	7. 5
					60		1.10	1500	0.600	6.00					
				1ph220	60		1.10	1550	0.580	5.80	0.890	8.90			
	A9R90DHB	4	90	1ph220	50	30Min.	0.71	1300	0.690	6.90	0.680	6.80	TP	CE	6.0
				1ph240			0.75		0.720	7.20	0.860	8.60			
	A9M90JHB	4	90	3ph200	50	Cont.	0.63	1300	0.690	6.90	1.010	10.10	TP	CE	—
					60		0.60	1550	0.600	6.00	0.760	7.60			
				3ph220	50	Cont.	0.63	1350	0.680	6.80	1.250	12.50	TP	CE	—
					60		0.60	1600	0.570	5.70	0.960	9.60			
	A9M90KHB	4	90	3ph380	50	Cont.	0.32	1300	0.680	6.80	1.055	10.55	TP	CE	—
					60		0.30	1550	0.570	5.70	0.820	8.20			
				3ph400	50	Cont.	0.35	1300	0.690	6.90	1.170	11.70	TP	CE	
					60		0.32	1550	0.580	5.80	0.890	8.90			
				3ph415	50	Cont.	0.33	1350	0.680	6.80	1.200	12.00	TP	CE	
					60		0.29	1600	0.570	5.70	0.950	9.50			
				3ph440	50	Cont.	0.35	1350	0.690	6.90	1.330	13.30	TP	CE	
					60		0.31	1600	0.580	5.80	1.050	10.50			

- The capacitor condenser depends on the voltage in use. Be sure to use the correct capacity for the voltage.
- The use of an incorrect condenser capacity can cause malfunctions. To ensure that you order the correct model, check the voltage in use before ordering.
- All the motor types in the table above are CE Mark and thermal protected (TP) is built in the coil.

Gear head rating torque table

Gear head type: G9B□KH

Frequency	Reduction ratio		3	3.6	5	6	7.5	9	10	12.5	15	18	20	25
50Hz	Ouput speed	r/min	500	417	300	250	200	166	150	120	100	83	75	60
	Rating torque	N·m	1.78	2.15	2.98	3.58	4.47	5.36	5.96	6.70	8.05	9.66	10.78	12.15
		Kgf·cm	18.2	21.9	30.4	36.5	45.6	54.7	60.8	68.4	82.1	98.6	110.0	124.0
60Hz	Ouput speed	r/min	600	500	360	300	240	200	180	144	120	100	90	72
	Rating torque	N·m	1.43	1.72	2.38	2.86	3.58	4.68	4.76	5.37	6.44	7.72	8.59	9.70
		Kgf·cm	14.6	17.5	24.3	29.2	36.5	43.7	48.6	54.8	65.7	78.8	87.6	99.0

Gear head type: G9B□KH

Frequency	Reduction ratio		30	36	40	50	60	75	90	100	120	150	180	200
50Hz	Ouput speed	r/min	50	41	37	30	25	20	16	15	12	10	8	7.5
	Rating torque	N·m	14.60	17.44	19.40	19.60	19.60	19.60	19.60	19.60	19.60	19.60	19.60	19.60
		Kgf·cm	149.0	178.0	198.0	200.0	200.0	200.0	200.0	200.0	200.0	200.0	200.0	200.0
60Hz	Ouput speed	r/min	60	50	45	36	30	24	20	18	15	12	10	9
	Rating torque	N·m	11.66	14.01	15.48	19.40	19.60	19.60	19.60	19.60	19.60	19.60	19.60	19.60
		Kgf·cm	119.0	143.0	158.0	198.0	200.0	200.0	200.0	200.0	200.0	200.0	200.0	200.0

- □ in gear head type names indicates the reduction ratio.
- When an intermediate gear head is used, the rating torgue is 19.60N · m(200kgf · cm)
- Rotation direction in shaded boxes are in the same direction as the motor rotation. Direction in unshaded boxes are in the opposite direction as the motor rotation.
- Rotation speed don't include motor slippage. The actual values will be between 2 and 20% lower, depending on the load.

Condenser

Fig1

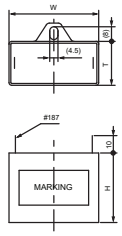

Fig2

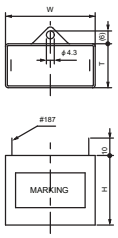

Fig3

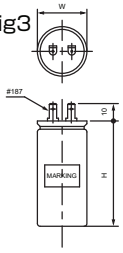

Motor type	Voltage (V)	Capacity (μF)	Condenser type	W (mm)	T (mm)	H (mm)	Figure
A9R90AH B	1ph100 1ph110	30.0	DAL-253006	φ40	—	65	3
A9R90BH B	1ph115	25.0	DMF-252506	58	36	39	1
A9R90CH B	1ph200 1ph220	7.5	DMF-45755	58	26	40	2
A9R90DH B	1ph220 1ph240	6.0	DMF-45605	50	25	40	1

Dimensions

Gear motors

Motor type : A9 M/R 90 □ HB

Gear head type : G9B □ KH

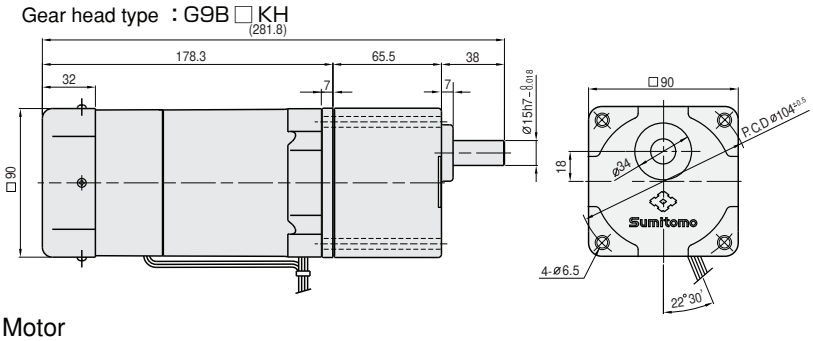

Gear head output shaft detail

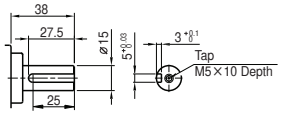

key size

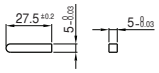

Motor

Type : A9 M/R 90 □ HB

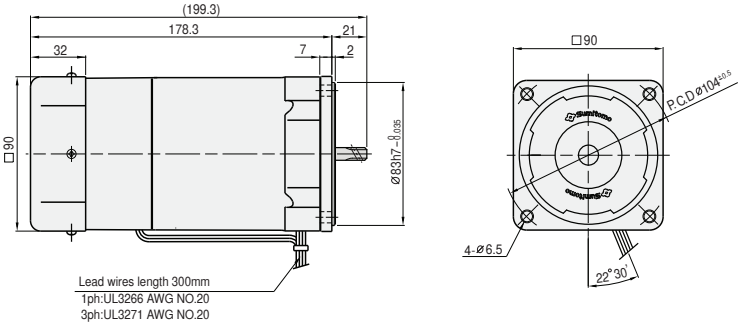

Intermediate gear head

Type: G9BXH10H

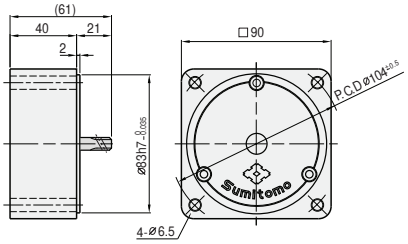

Table1. Weight

		Weight(kg)
Motor		3.41
Gear head	G9B3KH ~ G9B10KH	1.21
	G9B12.5KH ~ G9B20KH	1.30
	G9B25KH ~ G9B60KH	1.40
	G9B75KH ~ G9B200KH	1.45
Intermediate gear head		0.65

Wiring diagram

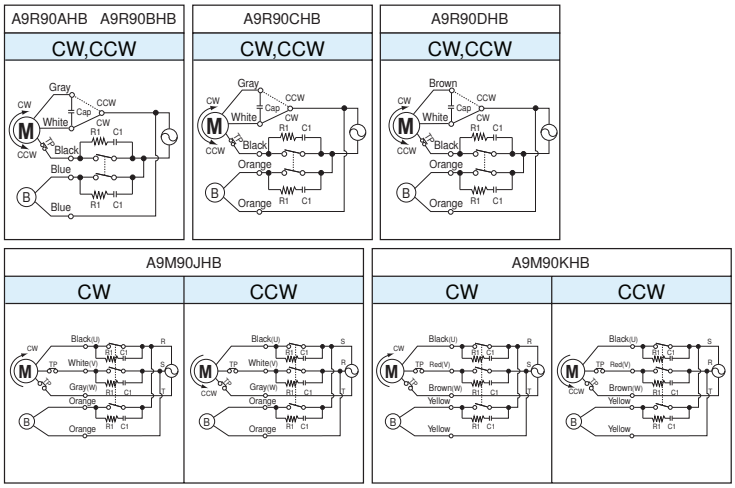

- Rotation directions are the directions as viewed from the end of the motor shaft.
- R_1=10 to 200 Ω（1/4W or larger）
- C_1=0.1 to 0.33 μF（125VAC or 250VAC）

Related information

Selection procedure: p. 11

Options: p. 169

Standard specifications: p. 48

Technical information: p. 175

MEMO

BIBUS

BIBUS s.r.o.
+420 547 125 300
www.bibus.cz

Motors with terminal boxes

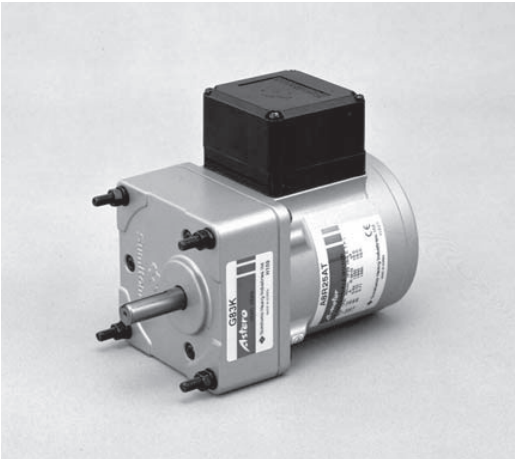

∗Gear head and motor with terminal box are sold separately.

Motors with terminal boxes

- Induction motors and reversible motors are available.
- Used for constant-speed operation.

Astero™

Overview
Induction
Reversible
Electromagnetic brakes
Terminal boxes (Overview)
Speed controller (Overview)
Unit type
Socket type
Speed controller (Induction)
Speed controller (Reversible)
Speed controller (Electro-magnetic brake)
Brake Packs
Options
Technical Information
Overview
6W
15W
25W
40W
60W
90W

Overview of Motors with terminal boxes(Standard specifications)

Table 1. Motor with terminal boxes specifications

	Motor type / Item	Motors with terminal boxes		
		Induction motors		Reversible motors
		Single-phase motor	3-phase motor	Single-phase motor
Motor	Capacity range	6W～90W 4poles	25W～90W 4poles	6W～90W 4poles
Motor	Protection method enclosure	6W～40W : IP54 Totally enclosed non ventilated 60W～ : IP23 Totally enclosed fan cooled type	25～40W : IP54 Totally enclosed non ventilated 60W～ : IP23 Totally enclosed fan cooled type	6～40W : IP23 Totally enclosed non ventilated 60W～ : IP23 Totally enclosed fan cooled type
Motor	Power source	100V 50/60Hz、110V 60Hz、115V 60Hz 200V 50/60Hz、220V 60Hz 220～240V 50Hz	200V 50/60Hz、220V 50/60Hz 380V 50/60Hz、400V 50/60Hz 415V 50/60Hz、440V 50/60Hz	100V 50/60Hz、110V 60Hz、115V 60Hz 200V 50/60Hz、220V 60Hz 220～240V 50Hz
Motor	Insulation class	Class E（120℃）	CE Marking : Class E（120℃） UL Standard : Class A（105℃）	CE Marking : Class E（120℃） UL Standard : Class A（105℃）
Motor	Time rating	Continuous	Continuous	Short-time (30minutes)
Motor	Starting method	Condenser running	Direct start	Condenser running
Motor	Lead wires	4 wires（3 wires 220～240V 50Hz） UL Style 3266 20AWG	3 wires UL Style 3271 20AWG	3 wires UL Style 3266 20AWG
Motor	Terminal box	4 terminals Use 24AWG～10AWG（0.25mm²～4.0mm²）lead wires with a length of about 8mm stripped. The grand isn't connected inside the terminal box. The grand connection should be installed in the motor case as described in making ground connections in the technical information.		
Motor	Standards	220～240V 50Hz CE Marking (Low voltage direction)	CE Marking (Low voltage directive) ,UL standard	CE Marking (Low voltage directive) ,UL standard
Motor	Insulation resistance	At least 100MΩ when measured with a 500V DC meager between the motor coil and case at normal temperature and humidity after motor has reached rated torque.		
Motor	Insulation withstand voltage	Normal function when a 1500V,50/60Hz current is applied between the motor coil and case for 1 minute at normal temperature and humidity after the motor has reached rated torque.		
Motor	Temperature rise	The temperature rise value（△T）should be no more than 60℃（no more than 45℃ for motors with fans）when measured by the prescribed method after the motor has reached rated torque.		The temperature rise value（△T）should be no more than 60℃ when measured by the prescribed method after the motor has reached rated torque.
Motor	Overheating protector(TP)	Built in thermal protector（auto restore type）Release:120±5℃, Restore:77±5℃		
Gear	Lubrication method	Grease lubrication. Grease is loaded at shipment.		
Paint	Color	Astero silver		
Ambient conditions	Locations	Indoors（Minimal dust and humidity）		
Ambient conditions	Temperature	-10～40℃		
Ambient conditions	Humidity	Under 85%		
Ambient conditions	Elevation	Under 1,000 m		
Ambient conditions	Atmosphere	Well ventilated location, free of corrosive gases, explosive gases, vapors and dust.		

Overview of Motors with terminal boxes(Standard specifications)

6 W～1 5 W

Single-phase Reversible motor	Single-phase Induction motor
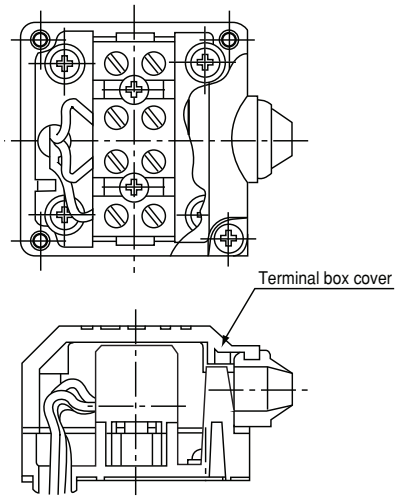	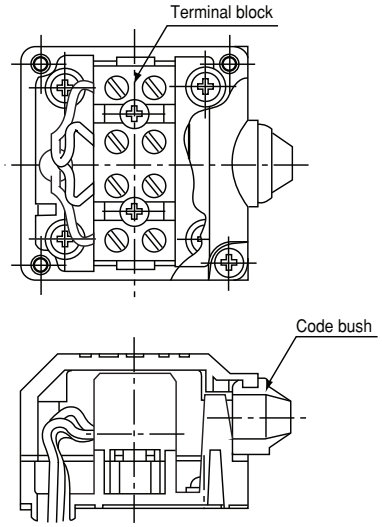

2 5 W～9 0 W

Single-phase Reversible motor	Single-phase Induction motor
3-phase Induction motor	
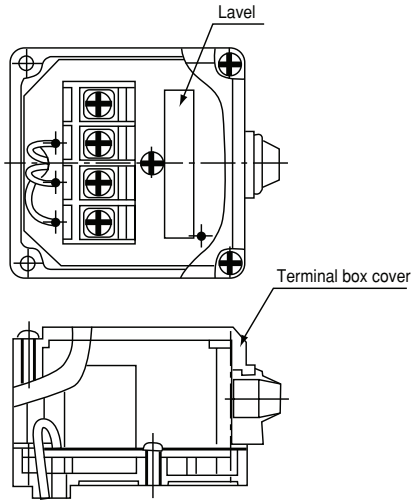	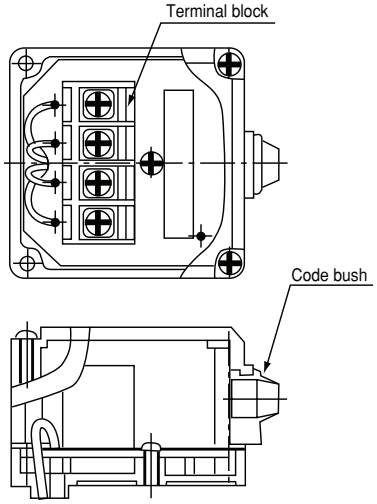

6W □60mm Motors with terminal boxes

Motor specification table

Induction motor

Frame size mm sq	Motor Type	Poles	Output (W)	Voltage (V)	Frequency (Hz)	Time ratiang	Rating torque: Current (A)	Rating torque: Output speed (r/min)	Rating torque: Torque (N·m)	Rating torque: Torque (Kgf·cm)	Starting torque (N·m)	Starting torque (Kgf·cm)	Over-heating pro-tection	Standard	Condenser (μF)
60	A6M06AT	4	6	1ph100	50	Cont.	0.21	1200	0.050	0.50	0.045	0.45	ZP	—	2.5
					60		0.19	1500	0.042	0.42					
				1ph110	60		0.20	1550	0.040	0.40	0.055	0.55			
	A6M06BT	4	6	1ph115	60	Cont.	0.19	1500	0.042	0.42	0.055	0.55	ZP	UL/CE	2.0
	A6M06CT	4	6	1ph200	50	Cont.	0.10	1200	0.050	0.50	0.045	0.45	ZP	—	0.7
					60			1500	0.042	0.42					
				1ph220	60		0.10	1550	0.040	0.40	0.055	0.55			
	A6M06DT	4	6	1ph220	50	Cont.	0.08	1200	0.050	0.50	0.050	0.50	ZP	CE	0.6
				1ph240			0.09		0.053	0.53	0.055	0.55			

Reversible motor

Frame size mm sq	Motor Type	Poles	Output (W)	Voltage (V)	Frequency (Hz)	Time ratiang	Rating torque: Current (A)	Rating torque: Output speed (r/min)	Rating torque: Torque (N·m)	Rating torque: Torque (Kgf·cm)	Starting torque (N·m)	Starting torque (Kgf·cm)	Over-heating pro-tection	Standard	Condenser (μF)
60	A6R06AT	4	6	1ph100	50	30Min.	0.21	1200	0.050	0.50	0.045	0.45	ZP	CE	3.0
					60			1500	0.042	0.42					
				1ph110	60		0.22	1550	0.040	0.40	0.060	0.60			
	A6R06BT	4	6	1ph115	60	30Min.	0.18	1500	0.042	0.42	0.050	0.50	ZP	UL/CE	2.3
	A6R06CT	4	6	1ph200	50	30Min.	0.10	1200	0.050	0.50	0.053	0.53	ZP	CE	0.8
					60			1500	0.042	0.42					
				1ph220	60		0.11	1550	0.040	0.40	0.060	0.60			
	A6R06DT	4	6	1ph220	50	30Min.	0.09	1200	0.047	0.47	0.050	0.50	ZP	CE	0.7
				1ph240			0.10		0.050	0.50	0.055	0.55			

- The capacitor condenser depends on the voltage in use. Be sure to use the correct capacity for the voltage.
- The use of an incorrect condenser capacity can cause malfunctions. To ensure that you order the correct model, check the voltage in use before ordering.
- All the motor types in the table above are CE Mark and impedance-protected (ZP) types.

Gear head rating torque table

Gear head type: G6□D

Frequency	Reduction ratio		3	3.6	5	6	7.5	9	10	12.5	15	18	20	25
50Hz	Ouput speed	r/min	500	417	300	250	200	166	150	120	100	83	75	60
	Rating torque	N·m	0.13	0.15	0.21	0.26	0.31	0.38	0.42	0.53	0.63	0.76	0.76	0.95
		Kgf·cm	1.3	1.5	2.1	2.6	3.2	3.9	4.3	5.4	6.4	7.7	7.7	9.7
60Hz	Ouput speed	r/min	600	500	360	300	240	200	180	144	120	100	90	72
	Rating torque	N·m	0.10	0.13	0.17	0.21	0.26	0.30	0.34	0.43	0.51	0.62	0.62	0.76
		Kgf·cm	1.0	1.3	1.7	2.1	2.6	3.1	3.5	4.4	5.2	6.3	6.3	7.8

Gear head type: G6□D

Frequency	Reduction ratio		30	36	40	50	60	75	90	100	120	150	180	200
50Hz	Ouput speed	r/min	50	41	37	30	25	20	16	15	12	10	8	7.5
	Rating torque	N·m	1.14	1.36	1.52	1.72	2.06	2.57	2.94	2.94	2.94	2.94	2.94	2.94
		Kgf·cm	11.6	13.9	15.5	17.5	21.0	26.2	30.0	30.0	30.0	30.0	30.0	30.0
60Hz	Ouput speed	r/min	60	50	45	36	30	24	20	18	15	12	10	9
	Rating torque	N·m	0.92	1.11	1.24	1.39	1.67	2.09	2.50	2.78	2.94	2.94	2.94	2.94
		Kgf·cm	9.4	11.3	12.6	14.2	17.0	21.3	25.5	28.4	30.0	30.0	30.0	30.0

- □ in gear head type names indicates the reduction ratio.
- Intermediate gear heads are for use with gear heads having a reduction ratio of 30 or more. When an intermediate gear head is used, the rating torque is 1.96 N•m (20 kgf•cm) for a reduction ratio between 30 and 40, and 2.94 N•m (30 kgf•cm) for a reduction ratio of 50 or more.
- Rotation direction in shaded boxes are in the same direction as the motor rotation. Direction in unshaded boxes are in the opposite direction as the motor rotation.
- Rotation speed don't include motor slippage. The actual values will be between 2 and 20% lower, depending on the load.

Dimensions

Gear motors

Motor type : A6 M/R 06 □ T
Gear head type : G6 □ D

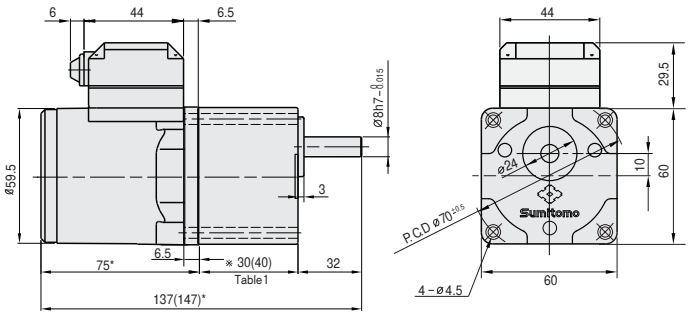

Length of reversible motor is longer than one of induction motor

Gear head output shaft detail

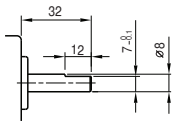

Motor

Type : A6 M/R 06 □ T

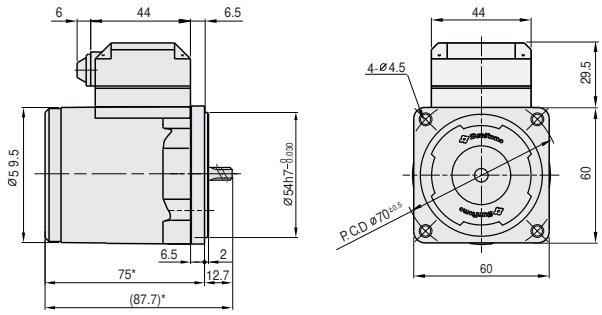

Length of reversible motor is longer than one of induction motor

Table1. Gear head length

Gear head size	Length(mm)
G63D～G618D	30
G620D～G6200D	40

Intermediate gear head

Type: G6XH10

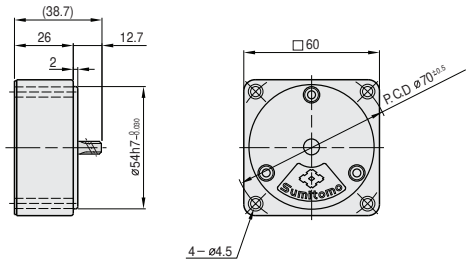

Table2. Weight

		Weight(kg)
Induction motor		0.76
Reversible motor		0.77
Gear head	G63D ～ G618D	0.24
	G620D ～ G640D	0.30
	G650D ～ G6200D	0.33
Intermediate gear head		0.18

6W □60mm Motors with terminal boxes

Wiring diagram

Induction motor

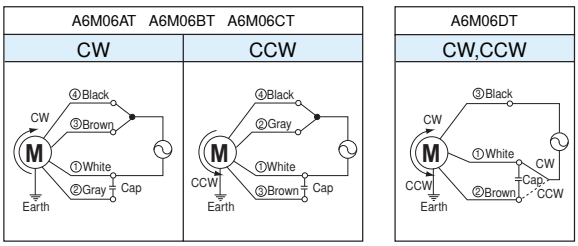

- Rotation directions are the directions as viewed from the end of the motor shaft.
- The motor must be completely stopped before its operation direction can be switched.
- If you try to switch the rotation direction while the motor is operating, the attempt may be unsuccessful, or may take some time

Reversible motor

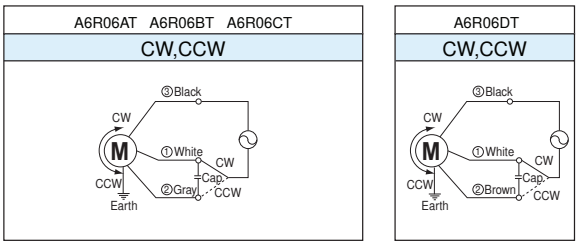

- Rotation directions are the directions as viewed from the end of the motor shaft.

Condenser

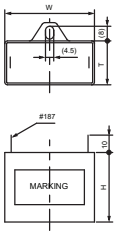

Induction motor

Motor type	Voltage (V)	Capacity (μF)	Condenser type	W (mm)	T (mm)	H (mm)
A6M06AT	1ph100	2.5	DMF-25255	36	16	25
	1ph110					
A6M06BT	1ph115	2.0	DMF-25205	36	16	25
A6M06CT	1ph200	0.7	DMF-45704	36	16	25
	1ph220					
A6M06DT	1ph220	0.6	DMF-45604	36	16	25
	1ph240					

Reversible motor

Motor type	Voltage (V)	Capacity (μF)	Condenser type	W (mm)	T (mm)	H (mm)
A6R06AT	1ph100	3.0	DMF-25305	36	16	25
	1ph110					
A6R06BT	1ph115	2.3	DMF-25235	36	16	25
A6R06CT	1ph200	0.8	DMF-45804	36	16	25
	1ph220					
A6R06DT	1ph220	0.7	DMF-45704	36	16	25
	1ph240					

Related information

Selection procedure:	Induction. p. 11,	Reversible. p. 31
Options:	Induction. p. 169,	Reversible. p. 169
Standard specifications:	Induction. p. 10,	Reversible. p. 28
Technical information:	Induction. p. 175,	Reversible. p. 175

MEMO

BIBUS

BIBUS s.r.o.
+420 547 125 300
www.bibus.cz

15W □70mm Motors with terminal boxes

Motor specification table

Induction motor

Frame size mm sq	Motor Type	Poles	Output	Voltage	Frequency	Time ratiang	Rating torque				Starting torque		Over-heating pro-tection	Standard	Condenser
							Current	Output speed	Torque						
			(W)	(V)	(Hz)		(A)	(r/min)	(N·m)	(Kgf·cm)	(N·m)	(Kgf·cm)			(μF)
70	A7M15AT	4	15	1ph100	50	Cont.	0.35	1250	0.120	1.20	0.090	0.90	—	—	5.0
					60		0.34	1550	0.100	1.00					
				1ph110	60		0.34	1600	0.100	1.00	0.110	1.10			
	A7M15CT	4	15	1ph200	50	Cont.	0.19	1200	0.125	1.25	0.090	0.90	—	—	1.2
					60		0.18	1500	0.120	1.20					
				1ph220	60		0.19	1550	0.110	1.10	0.110	1.10			
	A7M15DT	4	15	1ph220	50	Cont.	0.16	1200	0.125	1.25	0.075	0.75	TP	CE	0.9
				1ph240			0.18		0.135	1.35	0.090	0.90			

Reversible motor

Frame size mm sq	Motor Type	Poles	Output	Voltage	Frequency	Time ratiang	Rating torque				Starting torque		Over-heating pro-tection	Standard	Condenser
							Current	Output speed	Torque						
			(W)	(V)	(Hz)		(A)	(r/min)	(N·m)	(Kgf·cm)	(N·m)	(Kgf·cm)			(μF)
70	A7R15AT	4	15	1ph100	50	30Min.	0.42	1200	0.125	1.25	0.090	0.90	TP	CE	6.0
					60			1500	0.100	1.00					
				1ph110	60		0.44	1550	0.100	1.00	0.110	1.10			
	A7R15BT	4	15	1ph115	60	30Min.	0.35	1550	0.100	1.00	0.095	0.95	TP	UL/CE	4.5
	A7R15CT	4	15	1ph200	50	30Min.	0.21	1200	0.125	1.25	0.090	0.90	TP	CE	1. 5
					60			1500	0.100	1.00					
				1ph220	60		0.22	1550	0.100	1.00	0.110	1.10			
	A7R15DT	4	15	1ph220	50	30Min.	0.17	1200	0.125	1.25	0.090	0.90	TP	CE	1.2
				1ph240			0.18		0.145	1.45	0.110	1.10			

- The capacitor condenser depends on the voltage in use. Be sure to use the correct capacity for the voltage.
- The use of an incorrect condenser capacity can cause malfunctions. To ensure that you order the correct model, check the voltage in use before ordering.

Gear head rating torque table

Gear head type: G7□K

Frequency	Reduction ratio		3	3.6	5	6	7.5	9	10	12.5	15	18	20	25
50Hz	Ouput speed	r/min	500	417	300	250	200	166	150	120	100	83	75	60
	Rating torque	N·m	0.31	0.38	0.53	0.64	0.79	0.95	1.06	1.32	1.59	1.90	1.90	2.37
		Kgf·cm	3.2	3.9	5.4	6.5	8.1	9.7	10.8	13.5	16.2	19.4	19.4	24.2
60Hz	Ouput speed	r/min	600	500	360	300	240	200	180	144	120	100	90	72
	Rating torque	N·m	0.29	0.35	0.50	0.60	0.75	0.89	0.99	1.25	1.49	1.79	1.79	2.24
		Kgf·cm	3.0	3.6	5.1	6.1	7.6	9.1	10.1	12.7	15.2	18.2	18.2	22.8

Gear head type: G7□K

Frequency	Reduction ratio		30	36	40	50	60	75	90	100	120	150	180	200
50Hz	Ouput speed	r/min	50	41	37	30	25	20	16	15	12	10	8	7.5
	Rating torque	N·m	2.85	3.42	3.81	4.28	4.90	4.90	4.90	4.90	4.90	4.90	4.90	4.90
		Kgf·cm	29.1	34.9	38.8	43.6	50.0	50.0	50.0	50.0	50.0	50.0	50.0	50.0
60Hz	Ouput speed	r/min	60	50	45	36	30	24	20	18	15	12	10	9
	Rating torque	N·m	2.68	3.22	3.58	4.02	4.83	4.90	4.90	4.90	4.90	4.90	4.90	4.90
		Kgf·cm	27.3	32.8	36.5	41.0	49.2	50.0	50.0	50.0	50.0	50.0	50.0	50.0

- □ in gear head type names indicates the reduction ratio.
- Intermediate gear heads are for use with gear heads having a reduction ratio of 25 or more. When an intermediate gear head is used, the rating torque is 3.92 N•m (40 kgf•cm) for a reduction ratio between 25 and 40, and 4.90 N•m (50 kgf•cm) for a reduction ratio of 50 or more.
- Rotation direction in shaded boxes are in the same direction as the motor rotation. Direction in unshaded boxes are in the opposite direction as the motor rotation.
- Rotation speed don't include motor slippage. The actual values will be between 2 and 20% lower, depending on the load.

Dimensions

Gear motors

Motor type : A7 M/R 15 □ T
Gear head type : G7 □ K

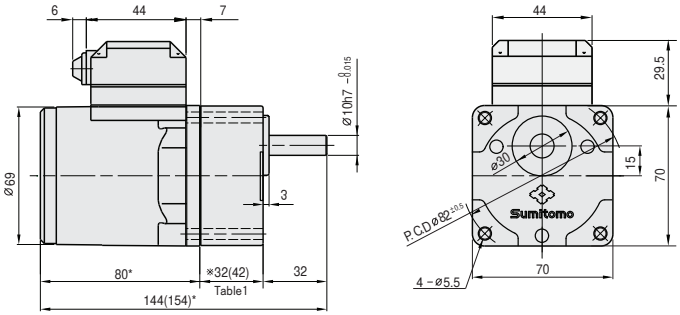

Length of reversible motor is longer than one of induction motor

Gear head output shaft detail

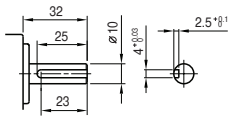

key size

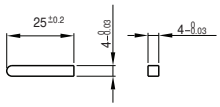

Motor

Type : A7 M/R 15 □ T

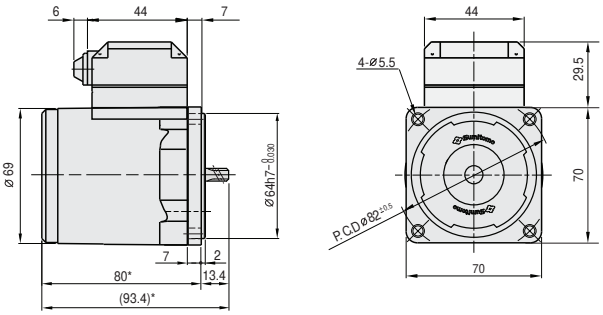

Length of reversible motor is longer than one of induction motor

Table1. Gear head length

Gear head size	Length(mm)
G73K～G718K	32
G720K～G7200K	42

Table2. Weight

		Weight(kg)
Induction motor		1.10
Reversible motor		1.11
Gear head	G73K ～ G718K	0.38
	G720K ～ G740K	0.47
	G750K ～ G7200K	0.52
Intermediate gear head		0.32

Intermediate gear head

Type: G7XH10

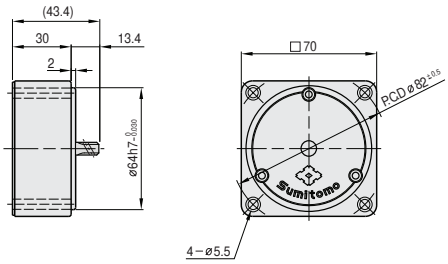

15W □70mm Motors with terminal boxes

Wiring diagram

Induction motor

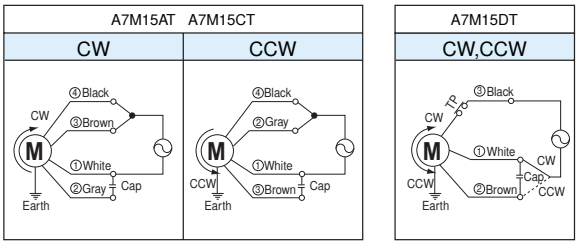

- Rotation directions are the directions as viewed from the end of the motor shaft.
- The motor must be completely stopped before its operation direction can be switched.
- If you try to switch the rotation direction while the motor is operating, the attempt may be unsuccessful, or may take some time

Reversible motor

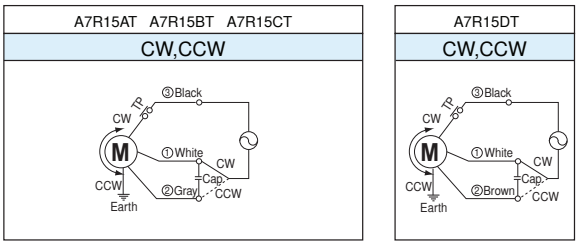

- Rotation directions are the directions as viewed from the end of the motor shaft.

Condenser

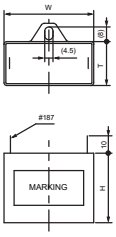

Induction motor

Motor type	Voltage (V)	Capacity (μF)	Condenser type	W (mm)	T (mm)	H (mm)
A7M15AT	1ph100	5.0	DMF-25505	38	19	29
	1ph110					
A7M15CT	1ph200	1.2	DMF-45125	36	16	25
	1ph220					
A7M15DT	1ph220	0.9	DMF-45904	36	16	25
	1ph240					

Reversible motor

Motor type	Voltage (V)	Capacity (μF)	Condenser type	W (mm)	T (mm)	H (mm)
A7R15AT	1ph100	6.0	DMF-25605	38	19	29
	1ph110					
A7R15BT	1ph115	4.5	DMF-25455	38	19	29
A7R15CT	1ph200	1.5	DMF-45155	36	16	25
	1ph220					
A7R15DT	1ph220	1.2	DMF-45125	36	16	25
	1ph240					

Related information

Selection procedure:	Induction. p. 11,	Reversible. p. 31
Options:	Induction. p. 169,	Reversible. p. 169
Standard specifications:	Induction. p. 10,	Reversible. p. 28
Technical information:	Induction. p. 175,	Reversible. p. 175

MEMO

BIBUS

BIBUS s.r.o.
+420 547 125 300
www.bibus.cz

25W □80mm Motors with terminal boxes

Motor specification table

Induction motor

Frame size mm sq	Motor Type	Poles	Output (W)	Voltage (V)	Frequency (Hz)	Time ratiang	Rating torque Current (A)	Rating torque Output speed (r/min)	Rating torque Torque (N·m)	Rating torque Torque (Kgf·cm)	Starting torque (N·m)	Starting torque (Kgf·cm)	Over-heating pro-tection	Standard	Condenser (μF)
80	A8M25AT	4	25	1ph100	50	Cont.	0.57	1250	0.200	2.00	0.145	1.45	—	—	6.0
					60		0.52	1550	0.165	1.65					
				1ph110	60		0.51	1600	0.160	1.60	0.180	1.80			
	A8M25CT	4	25	1ph200	50	Cont.	0.30	1250	0.200	2.00	0.145	1.45	—	—	1.5
					60		0.29	1500	0.170	1.70					
				1ph220	60		0.23	1550	0.165	1.65	0.180	1.80			
	A8M25DT	4	25	1ph220	50	Cont.	0.23	1200	0.210	2.10	0.110	1.10	TP	CE	1. 3
				1ph240			0.25		0.220	2.20	0.180	1.30			
	A8M25JT	4	25	3ph200	50	Cont.	0.25	1300	0.195	1.95	0.340	3.40	TP	CE	—
					60		0.22	1550	0.165	1.65	0.270	2.70			
				3ph220	50		0.26	1350	0.190	1.90	0.410	4.10			
					60		0.23	1600	0.160	1.60	0.320	3.20			
	A8M25KT	4	25	3ph380	50	Cont.	0.14	1250	0.200	2.00	0.315	3.15	TP	CE	—
					60		0.12	1500	0.170	1.70	0.250	2.50			
				3ph400	50	Cont.	0.14	1250	0.210	2.10	0.350	3.50	TP	CE	
					60		0.12	1500	0.180	1.80	0.275	2.75			
				3ph415	50	Cont.	0.15	1300	0.195	1.95	0.375	3.75	TP	CE	
					60		0.13	1550	0.165	1.65	0.300	3.00			
				3ph440	50	Cont.	0.15	1300	0.210	2.10	0.440	4.40	TP	CE	
					60		0.13	1550	0.180	1.80	0.340	3.40			

Reversible motor

Frame size mm sq	Motor Type	Poles	Output (W)	Voltage (V)	Frequency (Hz)	Time ratiang	Rating torque Current (A)	Rating torque Output speed (r/min)	Rating torque Torque (N·m)	Rating torque Torque (Kgf·cm)	Starting torque (N·m)	Starting torque (Kgf·cm)	Over-heating pro-tection	Standard	Condenser (μF)
80	A8R25AT	4	25	1ph100	50	30Min.	0.63	1250	0.210	2.10	0.180	1.80	TP	CE	10.0
					60		0.70	1500	0.170	1.70					
				1ph110	60		0.71	1550	0.170	1.70	0.230	2.30			
	A8R25BT	4	25	1ph115	60	30Min.	0.63	1550	0.170	1.70	0.130	1.30	TP	UL/CE	7.0
	A8R25CT	4	25	1ph200	50	30Min.	0.33	1250	0.210	2.10	0.180	1.80	TP	CE	2.5
					60			1550	0.170	1.70					
				1ph220	60		0.35	1600	0.165	1.65	0.230	2.30			
	A8R25DT	4	25	1ph220	50	30Min.	0.26	1200	0.200	2.00	0.170	1.70	TP	CE	2.0
				1ph240			0.28		0.220	2.20	0.220	2.20			

- The capacitor condenser depends on the voltage in use. Be sure to use the correct capacity for the voltage.
- The use of an incorrect condenser capacity can cause malfunctions. To ensure that you order the correct model, check the voltage in use before ordering.

Gear head rating torque table

Gear head type: G8□K

Frequency	Reduction ratio		3	3.6	5	6	7.5	9	10	12.5	15	18	20	25
50Hz	Ouput speed	r/min	500	417	300	250	200	166	150	120	100	83	75	60
	Rating torque	N·m	0.52	0.63	0.87	1.05	1.31	1.57	1.74	2.19	2.62	3.15	3.15	3.94
		Kgf·cm	5.3	6.4	8.9	10.7	13.4	16.0	17.8	22.3	26.7	32.1	32.1	40.2
60Hz	Ouput speed	r/min	600	500	360	300	240	200	180	144	120	100	90	72
	Rating torque	N·m	0.43	0.51	0.72	0.85	1.07	1.28	1.43	1.78	2.15	2.57	2.58	3.22
		Kgf·cm	4.4	5.2	7.3	8.7	10.9	13.1	14.6	18.2	21.9	26.2	26.3	32.9

Gear head type: G8□K

Frequency	Reduction ratio		30	36	40	50	60	75	90	100	120	150	180	200
50Hz	Ouput speed	r/min	50	41	37	30	25	20	16	15	12	10	8	7.5
	Rating torque	N·m	4.72	5.66	6.29	7.12	7.84	7.84	7.84	7.84	7.84	7.84	7.84	7.84
		Kgf·cm	48.2	57.8	64.2	72.6	80.0	80.0	80.0	80.0	80.0	80.0	80.0	80.0
60Hz	Ouput speed	r/min	60	50	45	36	30	24	20	18	15	12	10	9
	Rating torque	N·m	3.86	4.64	5.16	5.82	6.99	7.84	7.84	7.84	7.84	7.84	7.84	7.84
		Kgf·cm	39.4	47.3	52.6	59.4	71.3	80.0	80.0	80.0	80.0	80.0	80.0	80.0

- □ in gear head type names indicates the reduction ratio.
- Intermediate gear heads are for use with gear heads having a reduction ratio of 25 or more. When an intermediate gear head is used, the rating torque is 5.88 N•m (60 kgf•cm) for a reduction ratio between 25 and 40, and 7.84 N•m (80 kgf•cm) for a reduction ratio of 50 or more.
- Rotation direction in shaded boxes are in the same direction as the motor rotation. Direction in unshaded boxes are in the opposite direction as the motor rotation.
- Rotation speed don't include motor slippage. The actual values will be between 2 and 20% lower, depending on the load.

Dimensions

Gear motors

Motor type : A8 M/R 25 □ T

Gear head type : G8 □ K

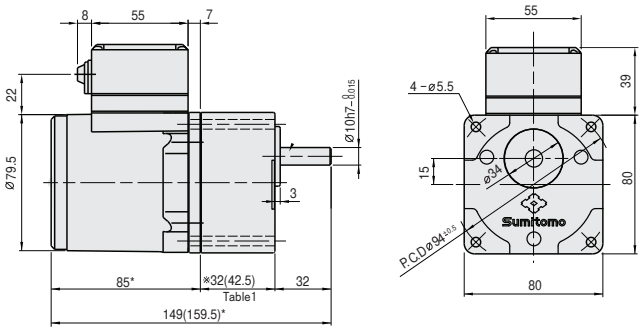

Length of reversible motor is longer than one of induction motor

Gear head output shaft detail

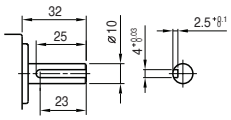

key size

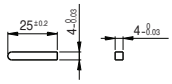

Motor

Type : A8 M/R 25 □ T

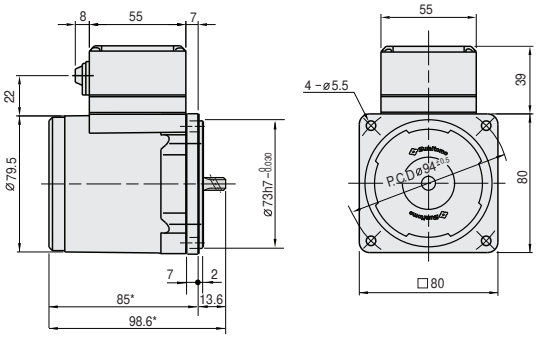

Length of reversible motor is longer than one of induction motor

Table1. Gear head length

Gear head size	Length (mm)
G83K ～G818K	32
G820K ～G8200K	42.5

Table2. Weight

		Weight(kg)
Induction motor		1.55
Reversible motor		1.60
Gear head	G83K ～ G818K	0.43
	G820K ～ G840K	0.57
	G850K ～ G8200K	0.61
Intermediate gear head		0.43

Intermediate gear head

Type: G8XH10

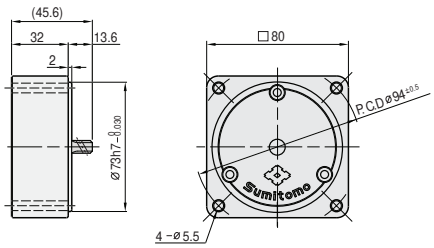

25W □80mm Motors with terminal boxes

Wiring diagram

Induction motor

A8M25AT A8M25CT		A8M25DT	A8M25JT		A8M25KT	
CW	CCW	CW,CCW	CW	CCW	CW	CCW

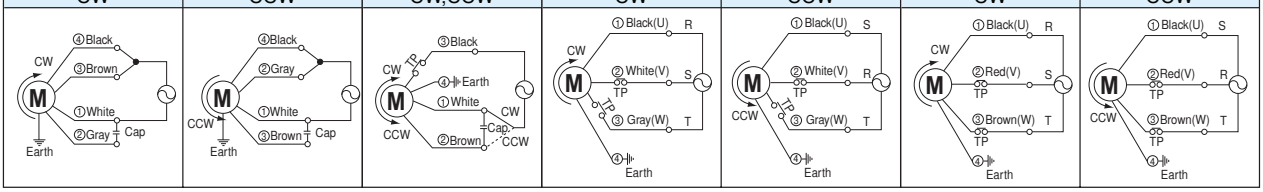

- Rotation directions are the directions as viewed from the end of the motor shaft.
- The motor must be completely stopped before its operation direction can be switched.
- If you try to switch the rotation direction while the motor is operating, the attempt may be unsuccessful, or may take some time

Reversible motor

A8R25AT A8R25BT A8R25CT	A8R25DT
CW,CCW	CW,CCW

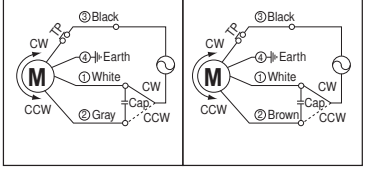

- Rotation directions are the directions as viewed from the end of the motor shaft.

Condenser

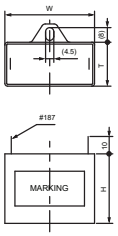

Induction motor

Motor type	Voltage (V)	Capacity (μF)	Condenser type	W (mm)	T (mm)	H (mm)
A8M25AT	1ph100	6.0	DMF-25605	38	19	29
	1ph110					
A8M25CT	1ph200	1.5	DMF-45155	36	16	25
	1ph220					
A8M25DT	1ph220	1.3	DMF-45135	36	16	25
	1ph240					

Reversible motor

Motor type	Voltage (V)	Capacity (μF)	Condenser type	W (mm)	T (mm)	H (mm)
A8R25AT	1ph100	10.0	DMF-251006	47	19	28
	1ph110					
A8R25BT	1ph115	7.0	DMF-25705	48	21	33
A8R25CT	1ph200	2.5	DMF-45255	47	19	28
	1ph220					
A8R25DT	1ph220	2.0	DMF-45205	38	19	29
	1ph240					

Related information

Selection procedure:	Induction. p. 11,	Reversible. p. 31
Options:	Induction. p. 169,	Reversible. p. 169
Standard specifications:	Induction. p. 10,	Reversible. p. 28
Technical information:	Induction. p. 175,	Reversible. p. 175

MEMO

BIBUS

BIBUS s.r.o.
+420 547 125 300
www.bibus.cz

40W □90mm Motors with terminal boxes

Motor specification table

Induction motor

Frame size mm sq	Motor Type	Poles	Output (W)	Voltage (V)	Frequency (Hz)	Time ratiang	Rating torque Current (A)	Rating torque Output speed (r/min)	Rating torque Torque (N·m)	Rating torque Torque (Kgf·cm)	Starting torque (N·m)	Starting torque (Kgf·cm)	Over-heating pro-tection	Standard	Condenser (μF)
90	A9M40AT	4	40	1ph100	50	Cont.	0.80	1300	0.310	3.10	0.240	2.40	—	—	10.0
					60		0.85	1550	0.260	2.60					
				1ph110	60		0.82	1600	0.250	2.50	0.290	2.90			
	A9M40CT	4	40	1ph200	50	Cont.	0.41	1300	0.310	3.10	0.240	2.40	—	—	2.5
					60		0.43	1550	0.260	2.60					
				1ph220	60		0.41	1600	0.250	2.50	0.290	2.90			
	A9M40DT	4	40	1ph220	50	Cont.	0.34	1250	0.315	3.15	0.180	1.80	TP	CE	2.0
				1ph240			0.37		0.335	3.35	0.210	2.10			
	A9M40JT	4	40	3ph200	50	Cont.	0.30	1300	0.310	3.10	0.490	4.90	TP	CE	—
					60		0.28	1550	0.260	2.60	0.370	3.70			
				3ph220	50	Cont.	0.30	1350	0.300	3.00	0.590	5.90			—
					60		0.28	1600	0.250	2.50	0.450	4.50			
	A9M40KT	4	40	3ph380	50	Cont.	0.21	1300	0.320	3.20	0.630	6.30	TP	CE	—
					60		0.19	1550	0.270	2.70	0.485	4.85			
				3ph400	50	Cont.	0.21	1300	0.330	3.30	0.690	6.90	TP	CE	
					60		0.19	1550	0.280	2.80	0.525	5.25			
				3ph415	50	Cont.	0.21	1350	0.310	3.10	0.730	7.30	TP	CE	
					60		0.19	1600	0.260	2.60	0.570	5.70			
				3ph440	50	Cont.	0.21	1350	0.320	3.20	0.820	8.20	TP	CE	
					60		0.19	1600	0.270	2.70	0.630	6.30			

Reversible motor

Frame size mm sq	Motor Type	Poles	Output (W)	Voltage (V)	Frequency (Hz)	Time ratiang	Rating torque Current (A)	Rating torque Output speed (r/min)	Rating torque Torque (N·m)	Rating torque Torque (Kgf·cm)	Starting torque (N·m)	Starting torque (Kgf·cm)	Over-heating pro-tection	Standard	Condenser (μF)
90	A9R40AT	4	40	1ph100	50	30Min.	0.84	1300	0.300	3.00	0.280	2.80	TP	CE	15.0
					60		1.00	1550	0.260	2.60					
				1ph110	60		1.00	1600	0.250	2.50	0.350	3.50			
	A9R40BT	4	40	1ph115	60	30Min.	1.00	1550	0.270	2.70	0.290	2.90	TP	UL/CE	12.0
	A9R40CT	4	40	1ph200	50	30Min.	0.39	1300	0.310	3.10	0.280	2.80	TP	CE	3.5
					60		0.47	1550	0.260	2.60					
				1ph220	60		0.46	1600	0.250	2.50	0.350	3.50			
	A9R40DT	4	40	1ph220	50	30Min.	0.40	1250	0.320	3.20	0.300	3.00	TP	CE	3.0
				1ph240			0.42		0.340	3.40	0.320	3.20			

- The capacitor condenser depends on the voltage in use. Be sure to use the correct capacity for the voltage.
- The use of an incorrect condenser capacity can cause malfunctions. To ensure that you order the correct model, check the voltage in use before ordering.

Gear head rating torque table

Gear head type: G9A□K

Frequency	Reduction ratio		3	3.6	5	6	7.5	9	10	12.5	15	18	20	25
50Hz	Ouput speed	r/min	500	417	300	250	200	166	150	120	100	83	75	60
	Rating torque	N·m	0.81	0.97	1.35	1.62	2.03	2.43	2.70	3.37	4.05	4.86	4.86	6.09
		Kgf·cm	8.3	9.9	13.8	16.5	20.7	24.8	27.5	34.4	41.3	49.6	49.6	62.1
60Hz	Ouput speed	r/min	600	500	360	300	240	200	180	144	120	100	90	72
	Rating torque	N·m	0.67	0.80	1.11	1.33	1.67	2.00	2.23	2.78	3.33	4.00	4.01	5.01
		Kgf·cm	6.8	8.2	11.3	13.6	17.0	20.4	22.7	28.4	34.0	40.8	40.9	51.1

Gear head type: G9A□K

Frequency	Reduction ratio		30	36	40	50	60	75	90	100	120	150	180	200
50Hz	Ouput speed	r/min	50	41	37	30	25	20	16	15	12	10	8	7.5
	Rating torque	N·m	7.30	8.76	9.73	9.80	9.80	9.80	9.80	9.80	9.80	9.80	9.80	9.80
		Kgf·cm	74.5	89.4	99.3	100.0	100.0	100.0	100.0	100.0	100.0	100.0	100.0	100.0
60Hz	Ouput speed	r/min	60	50	45	36	30	24	20	18	15	12	10	9
	Rating torque	N·m	6.01	7.21	8.02	9.80	9.80	9.80	9.80	9.80	9.80	9.80	9.80	9.80
		Kgf·cm	61.3	73.6	81.8	100.0	100.0	100.0	100.0	100.0	100.0	100.0	100.0	100.0

- □ in gear head type names indicates the reduction ratio.
- When an intermediate gear head is used, the rating torque is 9.80N · m(100kgf · cm).
- Rotation direction in shaded boxes are in the same direction as the motor rotation. Direction in unshaded boxes are in the opposite direction as the motor rotation.
- Rotation speed don't include motor slippage. The actual values will be between 2 and 20% lower, depending on the load.

Dimensions

Gear motors

Motor type ：A9 M/R 40□T
Gear head type ：G9A□K

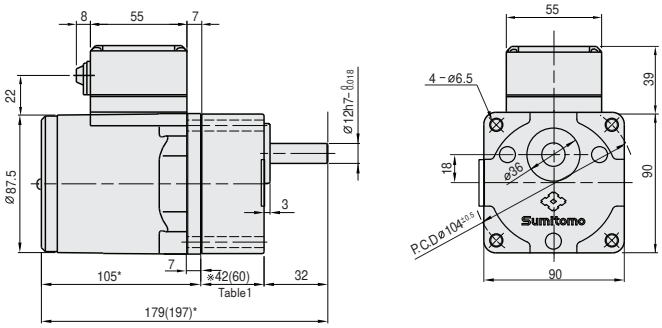

Length of reversible motor is longer than one of induction motor

Gear head output shaft detail

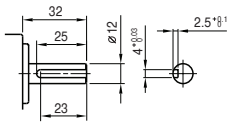

key size

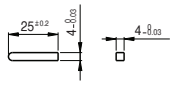

Motors

Type ：A9 M/R 40□T

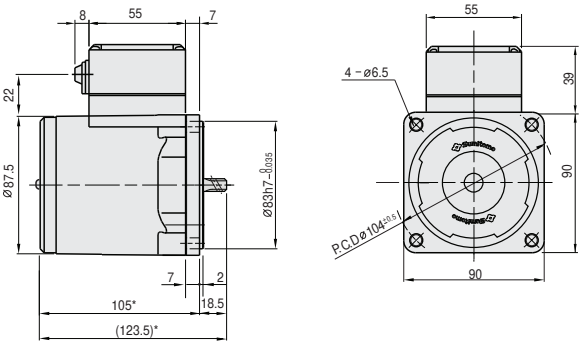

Length of reversible motor is longer than one of induction motor

Table1. Gear head length

Gear head size	Length(mm)
G9A3K～G9A18K	42
G9A20K～G9A200K	60

Table2. Weight

		Weight(kg)
Industion Motor		2.40
Reversible Motor		2.45
Gear head	G9A3K ～ G9A18K	0.73
	G9A20K ～ G9A40K	1.03
	G9A50K ～ G9A200K	1.13
Intermediate gear head		0.60

Intermediate gear head

Type : G9AXH10

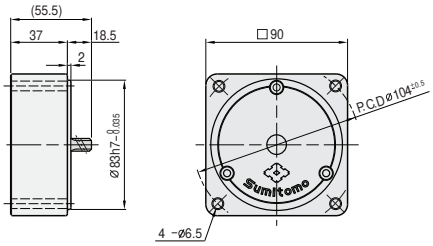

40W □90mm Motors with terminal boxes

Wiring diagram

Induction motor

A9M40AT A9M40CT		A9M40DT	A9M40JT		A9M40KT	
CW	CCW	CW,CCW	CW	CCW	CW	CCW

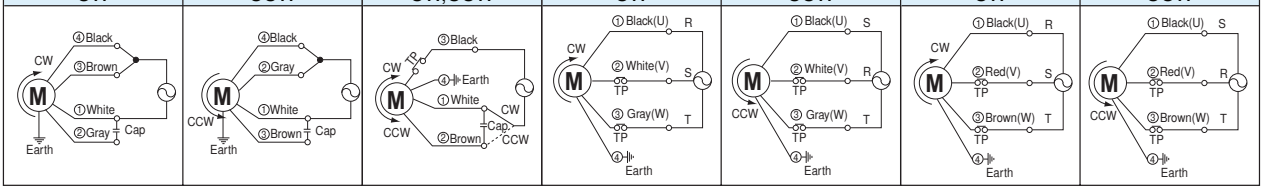

- Rotation directions are the directions as viewed from the end of the motor shaft.
- The motor must be completely stopped before its operation direction can be switched.
- If you try to switch the rotation direction while the motor is operating, the attempt may be unsuccessful, or may take some time

Reversible motor

A9R40AT A9R40BT A9R40CT	A9R40DT
CW,CCW	CW,CCW

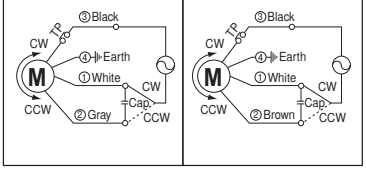

- Rotation directions are the directions as viewed from the end of the motor shaft.

Condenser

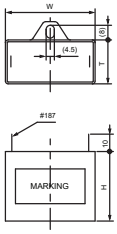

Induction motor

Motor type	Voltage (V)	Capacity (μF)	Condenser type	W (mm)	T (mm)	H (mm)
A9M40AT	1ph100	10.0	DMF-251006	47	19	28
	1ph110					
A9M40CT	1ph200	2.5	DMF-45255	47	19	28
	1ph220					
A9M40DT	1ph220	2.0	DMF-45205	38	19	29
	1ph240					

Reversible motor

Motor type	Voltage (V)	Capacity (μF)	Condenser type	W (mm)	T (mm)	H (mm)
A9R40AT	1ph100	15.0	DMF-251506	50	25	40
	1ph110					
A9R40BT	1ph115	12.0	DMF-251206	48	21	33
A9R40CT	1ph200	3.5	DMF-45355	48	21	33
	1ph220					
A9R40DT	1ph220	3.0	DMF-45305	47	19	28
	1ph240					

Related information

Selection procedure:	Induction. p. 11,	Reversible. p. 31
Options:	Induction. p. 169,	Reversible. p. 169
Standard specifications:	Induction. p. 10,	Reversible. p. 28
Technical information:	Induction. p. 175,	Reversible. p. 175

MEMO

BIBUS

BIBUS s.r.o.
+420 547 125 300
www.bibus.cz

60W □90mm Motors with terminal boxes

Motor specification table

Induction motor

Frame size mm sq	Motor Type	Poles	Output (W)	Voltage (V)	Frequency (Hz)	Time ratiang	Rating torque: Current (A)	Rating torque: Output speed (r/min)	Rating torque: Torque (N·m)	Rating torque: Torque (Kgf·cm)	Starting torque (N·m)	Starting torque (Kgf·cm)	Over-heating pro-tection	Standard	Condenser (μF)
90	A9M60AHT	4	60	1ph100	50	Cont.	1.26	1300	0.460	4.60	0.340	3.40	—	—	15.0
					60		1.37	1550	0.390	3.90					
				1ph110	60		1.35	1600	0.380	3.80	0.480	4.80			
	A9M60CHT	4	60	1ph200	50	Cont.	0.65	1300	0.470	4.70	0.385	3.85	—	—	4.0
					60		0.70	1550	0.400	4.00					
				1ph220	60		0.68	1600	0.390	3.90	0.480	4.80			
	A9M60DHT	4	60	1ph220	50	Cont.	0.47	1300	0.460	4.60	0.320	3.20	TP	CE	3.5
				1ph240			0.50		0.490	4.90	0.390	3.90			
	A9M60JHT	4	60	3ph200	50	Cont.	0.46	1300	0.460	4.60	0.710	7.10	TP	CE	—
					60		0.42	1550	0.390	3.90	0.540	5.40			
				3ph220	50	Cont.	0.46	1350	0.440	4.40	0.860	8.60			—
					60		0.41	1600	0.390	3.90	0.680	6.80			
	A9M60KHT	4	60	3ph380	50	Cont.	0.27	1300	0.460	4.60	0.825	8.25	TP	CE	—
					60		0.24	1550	0.390	3.90	0.650	6.50			
				3ph400	50	Cont.	0.29	1300	0.470	4.70	0.930	9.30	TP	CE	
					60		0.25	1550	0.400	4.00	0.735	7.35			
				3ph415	50	Cont.	0.27	1350	0.460	4.60	0.995	9.95	TP	CE	
					60		0.23	1600	0.380	3.80	0.750	7.50			
				3ph440	50	Cont.	0.31	1350	0.470	4.70	1.075	10.75	TP	CE	
					60		0.25	1600	0.390	3.90	0.840	8.40			

Reversible motor

Frame size mm sq	Motor Type	Poles	Output (W)	Voltage (V)	Frequency (Hz)	Time ratiang	Rating torque: Current (A)	Rating torque: Output speed (r/min)	Rating torque: Torque (N·m)	Rating torque: Torque (Kgf·cm)	Starting torque (N·m)	Starting torque (Kgf·cm)	Over-heating pro-tection	Standard	Condenser (μF)
90	A9R60AHT	4	60	1ph100	50	30Min.	1.40	1250	0.480	4.80	0.600	6.00	TP	CE	25.0
					60		1.60	1550	0.390	3.90					
				1ph110	60		1.60	1600	0.380	3.80	0.700	7.00			
	A9R60BHT	4	60	1ph115	60	30Min.	1.30	1600	0.390	3.90	0.600	6.00	TP	UL/CE	20.0
	A9R60CHT	4	60	1ph200	50	30Min.	0.70	1250	0.480	4.80	0.550	5.50	TP	CE	6.0
					60		0.76	1550	0.390	3.90					
				1ph220	60		0.75	1600	0.380	3.80	0.700	7.00			
	A9R60DHT	4	60	1ph220	50	30Min.	0.63	1250	0.480	4.80	0.590	5.90	TP	CE	5. 0
				1ph240			0.67		0.500	5.00	0.630	6.30			

- The capacitor condenser depends on the voltage in use. Be sure to use the correct capacity for the voltage.
- The use of an incorrect condenser capacity can cause malfunctions. To ensure that you order the correct model, check the voltage in use before ordering.

Gear head rating torque table

Gear head type: G 9 B□K H

Frequency	Reduction ratio		3	3.6	5	6	7.5	9	10	12.5	15	18	20	25
50Hz	Ouput speed	r/min	500	417	300	250	200	166	150	120	100	83	75	60
	Rating torque	N·m	1.20	1.43	1.99	2.38	2.99	3.58	3.97	4.47	5.37	6.44	7.15	8.09
		Kgf·cm	12.2	14.6	20.3	24.3	30.4	36.5	40.5	45.6	54.8	65.7	73.0	82.5
60Hz	Ouput speed	r/min	600	500	360	300	240	200	180	144	120	100	90	72
	Rating torque	N·m	0.95	1.15	1.59	1.90	2.38	2.86	3.18	3.58	4.29	5.16	5.72	6.47
		Kgf·cm	9.7	11.7	16.2	19.4	24.3	29.2	32.4	36.5	43.8	52.6	58.4	66.0

Gear head type: G 9 B□K H

Frequency	Reduction ratio		30	36	40	50	60	75	90	100	120	150	180	200
50Hz	Ouput speed	r/min	50	41	37	30	25	20	16	15	12	10	8	7.5
	Rating torque	N·m	9.70	11.66	12.94	16.17	19.40	19.60	19.60	19.60	19.60	19.60	19.60	19.60
		Kgf·cm	99.0	119.0	132.0	165.0	198.0	200.0	200.0	200.0	200.0	200.0	200.0	200.0
60Hz	Ouput speed	r/min	60	50	45	36	30	24	20	18	15	12	10	9
	Rating torque	N·m	7.76	9.31	10.39	12.94	15.48	17.35	19.60	19.60	19.60	19.60	19.60	19.60
		Kgf·cm	79.2	95.0	106.0	132.0	158.0	177.0	200.0	200.0	200.0	200.0	200.0	200.0

- □ in gear head type names indicates the reduction ratio.
- When an intermediate gear head is used, the rating torgue is 19.60N · m(200kgf · cm)
- Rotation direction in shaded boxes are in the same direction as the motor rotation. Direction in unshaded boxes are in the opposite direction as the motor rotation.
- Rotation speed don't include motor slippage. The actual values will be between 2 and 20% lower, depending on the load.

Dimensions

Gear motors

Motor type : A9 MR 60 □ T

Gear head type : G9B □ KH

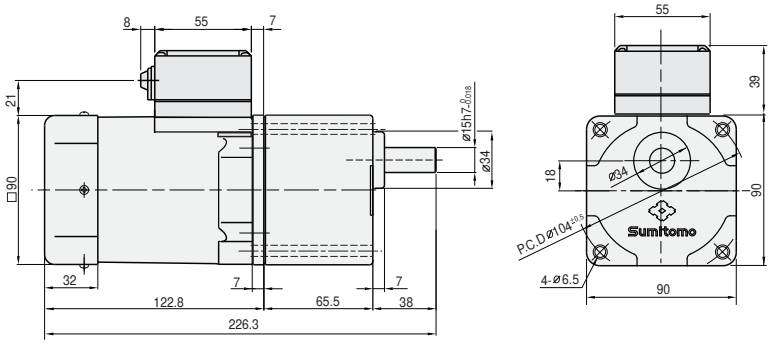

Gear head output shaft detail

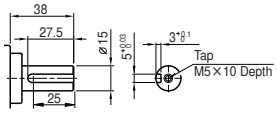

key size

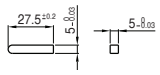

Motors

Type : A9 MR 60 □ T

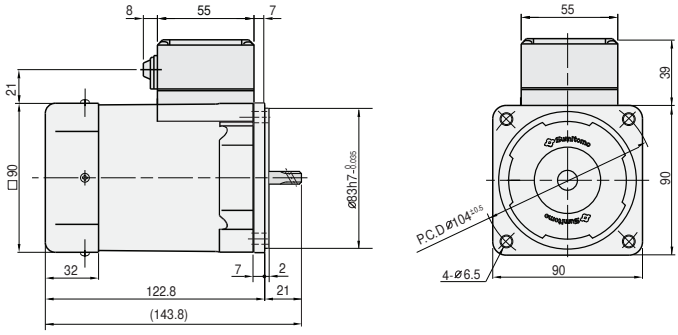

Table1. Weight

		Weight(kg)
Industion Motor		2.55
Reversible Motor		2.60
Gear head	G9B3KH ~ G9B10KH	1.21
	G9B12.5KH ~ G9B20KH	1.30
	G9B25KH ~ G9B60KH	1.40
	G9B75KH ~ G9B200KH	1.45
Intermediate gear head		0.65

Intermediate gear head

Type : G9AXH10

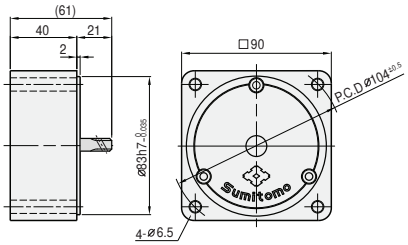

Overview
Induction
Reversible
Electromagnetic brakes
Terminal boxes (Overview)
Speed controller (Overview)
Unit type
Socket type
Speed controller (Induction)
Speed controller (Reversible)
Speed controller (Electro-magnetic brake)
Brake Packs
Options
Technical Information
Overview
6W
15W
25W
40W
60W
90W

Wiring diagram

Induction motor

A9M60AHT A9M60CHT		A9M60DHT	A9M60JHT		A9M60KHT	
CW	CCW	CW,CCW	CW	CCW	CW	CCW

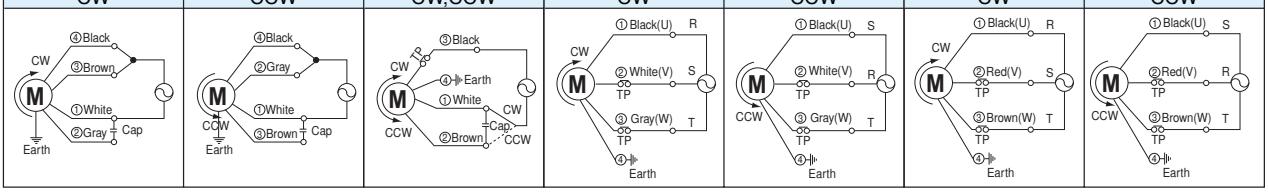

- Rotation directions are the directions as viewed from the end of the motor shaft.
- The motor must be completely stopped before its operation direction can be switched.
- If you try to switch the rotation direction while the motor is operating, the attempt may be unsuccessful, or may take some time

Reversible motor

A9R60AHT A9R60BHT A9R60CHT	A9R60DHT
CW,CCW	CW,CCW

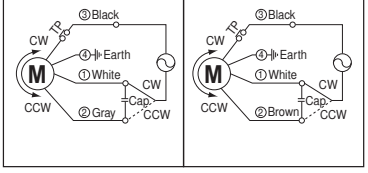

- Rotation directions are the directions as viewed from the end of the motor shaft.

Condenser

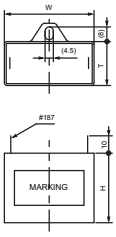

Induction motor

モータ形式	電圧 (V)	静電容量 (μF)	コンデンサ形式	W (mm)	T (mm)	H (mm)
A9M60AHT	1ph100	15.0	DMF-251506	50	25	40
	1ph110					
A9M60CHT	1ph200	4.0	DMF-45405	48	21	33
	1ph220					
A9M60DHT	1ph220	3.5	DMF-45355	48	21	33
	1ph240					

Reversible motor

Motor type	Voltage (V)	Capacity (μF)	Condenser type	W (mm)	T (mm)	H (mm)
A9R60AHT	1ph100	25.0	DMF-252506	58	36	39
	1ph110					
A9R60BHT	1ph115	20.0	DMF-252006	58	36	39
A9R60CHT	1ph200	6.0	DMF-45605	50	25	40
	1ph220					
A9R60DHT	1ph220	5.0	DMF-45505	50	25	40
	1ph240					

Related information

Selection procedure:	Induction. p. 11,	Reversible. p. 31
Options:	Induction. p. 169,	Reversible. p. 169
Standard specifications:	Induction. p. 10,	Reversible. p. 28
Technical information:	Induction. p. 175,	Reversible. p. 175

MEMO

BIBUS

BIBUS s.r.o.
+420 547 125 300
www.bibus.cz

90W □90mm Motors with terminal boxes

Motor specification table

Induction motor

Frame size mm sq	Motor Type	Poles	Output	Voltage	Frequency	Time ratiang	Rating torque Current	Rating torque Output speed	Rating torque Torque		Starting torque		Over-heating pro-tection	Standard	Condenser
			(W)	(V)	(Hz)		(A)	(r/min)	(N·m)	(Kgf·cm)	(N·m)	(Kgf·cm)			(μF)
90	A9M90AHT	4	90	1ph100	50	Cont.	1.80	1300	0.690	6.90	0.500	5.00	—	—	25.0
					60		2.00	1550	0.580	5.80					
				1ph110	60		2.00	1600	0.560	5.60	0.570	5.70			
	A9M90CHT	4	90	1ph200	50	Cont.	0.90	1300	0.690	6.90	0.500	5.00	—	—	6.0
					60		1.00	1550	0.580	5.80					
				1ph220	60		1.00	1600	0.560	5.60	0.570	5.70			
	A9M90DHT	4	90	1ph220	50	Cont.	0.68	1300	0.690	6.90	0.480	4.80	TP	CE	5. 0
				1ph240			0.72		0.720	7.20	0.520	5.20			
	A9M90JHT	4	90	3ph200	50	Cont.	0.63	1300	0.690	6.90	1.010	10.10	TP	CE	—
					60		0.60	1550	0.600	6.00	0.760	7.60			
				3ph220	50	Cont.	0.63	1350	0.680	6.80	1.250	12.50			—
					60		0.60	1600	0.570	5.70	0.960	9.60			
	A9M90KHT	4	90	3ph380	50	Cont.	0.32	1300	0.680	6.80	1.055	10.55	TP	CE	—
					60		0.30	1550	0.570	5.70	0.820	8.20			
				3ph400	50	Cont.	0.35	1300	0.690	6.90	1.170	11.70	TP	CE	
					60		0.32	1550	0.580	5.80	0.890	8.90			
				3ph415	50	Cont.	0.33	1350	0.680	6.80	1.200	12.00	TP	CE	
					60		0.29	1600	0.570	5.70	0.950	9.50			
				3ph440	50	Cont.	0.35	1350	0.690	6.90	1.330	13.30	TP	CE	
					60		0.31	1600	0.580	5.80	1.050	10.50			

Reversible motor

Frame size mm sq	Motor Type	Poles	Output	Voltage	Frequency	Time ratiang	Rating torque Current	Rating torque Output speed	Rating torque Torque		Starting torque		Over-heating pro-tection	Standard	Condenser
			(W)	(V)	(Hz)		(A)	(r/min)	(N·m)	(Kgf·cm)	(N·m)	(Kgf·cm)			(μF)
90	A9R90AHT	4	90	1ph100	50	30Min.	2.10	1200	0.750	7.50	0.650	6.50	TP	CE	30.0
					60		2.25	1500	0.600	6.00	0.650	6.50			
				1ph110	60		2.25	1550	0.580	5.80	0.850	8.50			
	A9R90BHT	4	90	1ph115	60	30Min.	1.80	1550	0.600	6.00	0.800	8.00	TP	UL/CE	25.0
	A9R90CHT	4	90	1ph200	50	30Min.	0.90	1200	0.750	7.50	0.650	6.50	TP	CE	7.0
					60		1.00	1500	0.600	6.00	0.650	6.50			
				1ph220	60		1.00	1550	0.580	5.80	0.850	8.50			
	A9R90DHT	4	90	1ph220	50	30Min.	0.82	1250	0.720	7.20	0.650	6.50	TP	CE	6.0
				1ph240			0.86		0.740	7.40	0.800	8.00			

- The capacitor condenser depends on the voltage in use. Be sure to use the correct capacity for the voltage.
- The use of an incorrect condenser capacity can cause malfunctions. To ensure that you order the correct model, check the voltage in use before ordering.

Gear head rating torque table

Gear head type: G9B□KH

Frequency	Reduction ratio		3	3.6	5	6	7.5	9	10	12.5	15	18	20	25
50Hz	Ouput speed	r/min	500	417	300	250	200	166	150	120	100	83	75	60
	Rating torque	N·m	1.78	2.15	2.98	3.58	4.47	5.36	5.96	6.70	8.05	9.66	10.78	12.15
		Kgf·cm	18.2	21.9	30.4	36.5	45.6	54.7	60.8	68.4	82.1	98.6	110.0	124.0
60Hz	Ouput speed	r/min	600	500	360	300	240	200	180	144	120	100	90	72
	Rating torque	N·m	1.43	1.72	2.38	2.86	3.58	4.68	4.76	5.37	6.44	7.72	8.59	9.70
		Kgf·cm	14.6	17.5	24.3	29.2	36.5	43.7	48.6	54.8	65.7	78.8	87.6	99.0

Gear head type: G9B□KH

Frequency	Reduction ratio		30	36	40	50	60	75	90	100	120	150	180	200
50Hz	Ouput speed	r/min	50	41	37	30	25	20	16	15	12	10	8	7.5
	Rating torque	N·m	14.60	17.44	19.40	19.60	19.60	19.60	19.60	19.60	19.60	19.60	19.60	19.60
		Kgf·cm	149.0	178.0	198.0	200.0	200.0	200.0	200.0	200.0	200.0	200.0	200.0	200.0
60Hz	Ouput speed	r/min	60	50	45	36	30	24	20	18	15	12	10	9
	Rating torque	N·m	11.66	14.01	15.48	19.40	19.60	19.60	19.60	19.60	19.60	19.60	19.60	19.60
		Kgf·cm	119.0	143.0	158.0	198.0	200.0	200.0	200.0	200.0	200.0	200.0	200.0	200.0

- □ in gear head type names indicates the reduction ratio.
- When an intermediate gear head is used, the rating torgue is 19.60N · m(200kgf · cm)
- Rotation direction in shaded boxes are in the same direction as the motor rotation. Direction in unshaded boxes are in the opposite direction as the motor rotation.
- Rotation speed don't include motor slippage. The actual values will be between 2 and 20% lower, depending on the load.

Dimensions

Gear motors

Motor type : A9 M/R 90 □ HT

Gear head type : G9B □ KH

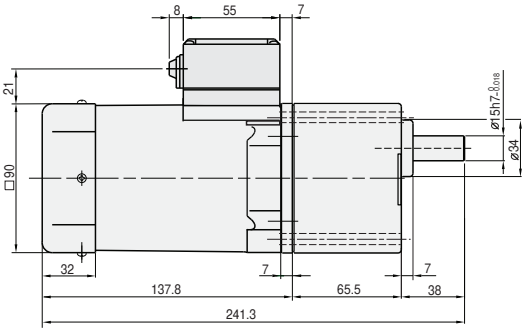

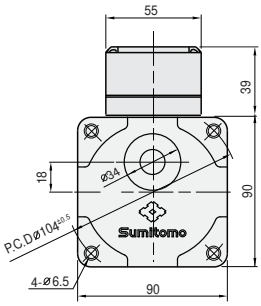

Gear head output shaft detail

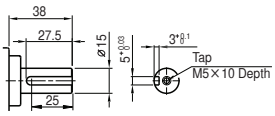

key size

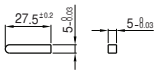

Motor

Type : A9 M/R 90 □ HT

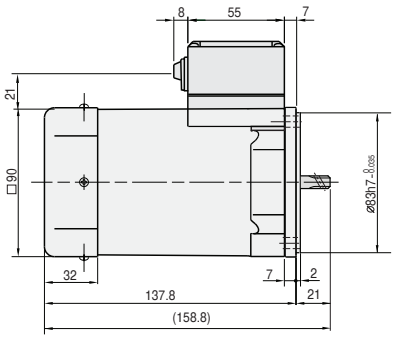

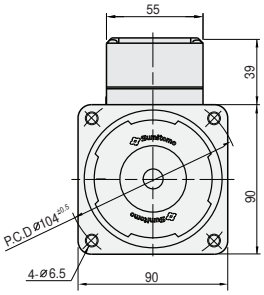

Table1. Weight

		Weight(kg)
Induction motor		3.05
Reversible motor		3.10
Gear head	G9B3KH ~ G9B10KH	1.21
	G9B12.5KH ~ G9B20KH	1.30
	G9B25KH ~ G9B60KH	1.40
	G9B75KH ~ G9B200KH	1.45
Intermediate gear head		0.65

Intermediate gear head

Type: G9BXH10H

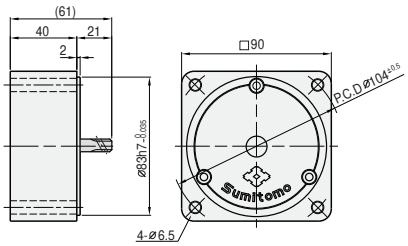

Overview
Induction
Reversible
Electromagnetic brakes
Terminal boxes (Overview)
Speed controller (Overview)
Unit type
Socket type
Speed controller (Induction)
Speed controller (Reversible)
Speed controller (Electro-magnetic brake)
Brake Packs
Options
Technical Information
Overview
6W
15W
25W
40W
60W
90W

Wiring diagram

Induction motor

A9M90AHT A9M90CHT		A9M90DHT	A9M90JHT		A9M90KHT	
CW	CCW	CW,CCW	CW	CCW	CW	CCW
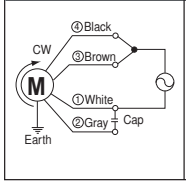	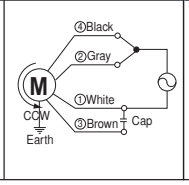	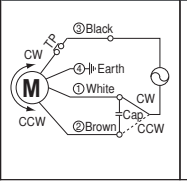	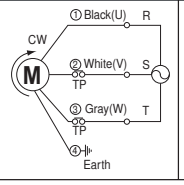	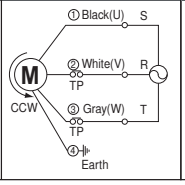	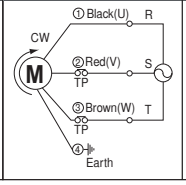	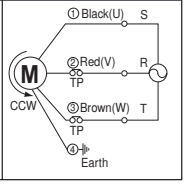

- Rotation directions are the directions as viewed from the end of the motor shaft.
- The motor must be completely stopped before its operation direction can be switched.
- If you try to switch the rotation direction while the motor is operating, the attempt may be unsuccessful, or may take some time

Reversible motor

A9R90AHT A9R90BHT A9R90CHT	A9R90DHT
CW,CCW	CW,CCW
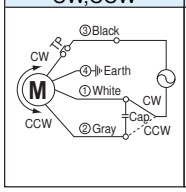	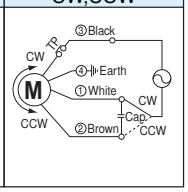

- Rotation directions are the directions as viewed from the end of the motor shaft.

Condenser

Fig1

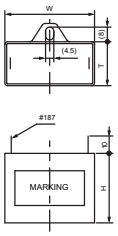

Induction motor

Motor type	Voltage (V)	Capacity (μF)	Condenser type	W (mm)	T (mm)	H (mm)
A9M90AHT	1ph100 1ph110	25.0	DMF-252506	58	36	39
A9M90CHT	1ph200 1ph220	6.0	DMF-45605	50	25	40
A9M90DHT	1ph220 1ph240	5.0	DMF-45505	50	25	40

Reversible motor

Motor type	Voltage (V)	Capacity (μF)	Condenser type	W (mm)	T (mm)	H (mm)
A9R90AHT	1ph100 1ph110	30.0	DAL-253006 *	φ40	–	65
A9R90BHT	1ph115	25.0	DMF-252506	58	36	39
A9R90CHT	1ph200 1ph220	7.0	DMF-45705	50	25	40
A9R90DHT	1ph220 1ph240	6.0	DMF-45605	50	25	40

* Refor to Fig2

Fig2

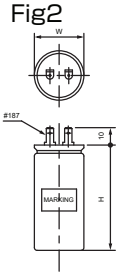

Related information

Selection procedure:	Induction. p. 11,	Reversible. p. 31
Options:	Induction. p. 169,	Reversible. p. 169
Standard specifications:	Induction. p. 10,	Reversible. p. 28
Technical information:	Induction. p. 175,	Reversible. p. 175

Speed controllers

Overview
Induction
Reversible
Electromagnetic brakes
Terminal boxes
Speed controller (Overview)
Unit type
Socket type
Speed controller (Induction)
Speed controller (Reversible)
Speed controller (Electro-magnetic brake)
Brake Packs
Options
Technical Information
Overview
6W
15W
25W
40W
60W
90W

Overview of speed controllers(Characteristics)

1. Speed controllers characteristics

Speed control switch makes it easy to regulate wide range of speeds (50 Hz: 90 to 1,400 r/min, 60 Hz: 90 to 1,700 r/min).

Speed controllers come with a built-in TG (tachogenerator), and are designed to enable feedback control. The motor speed won't change even if the power frequency changes.

On speed control motors with electromagnetic brakes, the instant stop function and electromagnetic brake are both driven by the controller, enabling a powerful braking force. Since the brakes are de-energizing electromagnetic brakes, the load is stored when the power is shut off.

2. Operation characteristics

Don't let the motor casing surface temperature of a speed control motor exceed 90˚C during operation.

Fig1. shows the N-T characteristic of a speed control motor, with operation limit lines. The operation limit lines indicate the torque limit (operation limit torque) for continuous operation (30-minute operation for reversible motors). This limit has been set to keep the motor casing temperature below 90℃. The formula below provides a rough estimate of temperature.

$$T_M \leqq (T_{1200} - T_{90}) \times (N_L - 90)/1{,}110 + T_{90}$$

T_M : Equivalent transmitted torque converted to motor shaft torque (N·m)
N_L : Motor's minimum speed (r/min)
T_{1200} : Operation limit torque at 1,200 RPM (N·m)
T_{90} : Operation limit torque at 90 RPM (N·m)

Note that when the motor is operated at speed settings, the motor speed decreases slightly when the load increases.

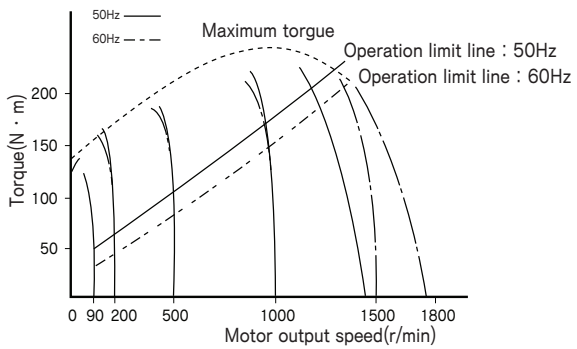

Fig 1 . N-T characteristic of a speed control motors

3. Principle of speed controllers

Speed control motors are comprised of the closed loop shown in Fig2. Voltage ① set by the speed control switch is compared to voltage ② detected by the tachogenerator, and the power voltage ③ is controlled (primary voltage control) to eliminate the voltage difference, maintaining the motor speed ④ at the set value.

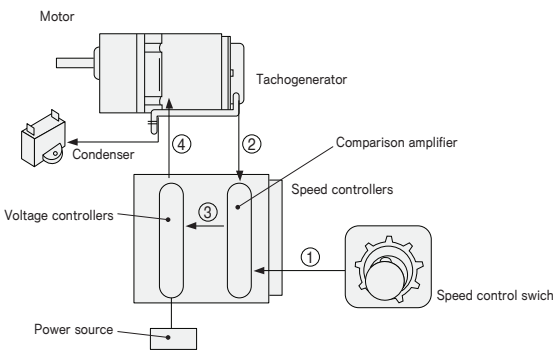

Fig2. Principle of speed controllers

Overview of speed controllers(Selection procedure)

Select type of speed controllers

	Unit-type	Socket-type
Variable speed only (instant braking not needed)	See P. 95	Contact CC
Instant braking needed (parallel operation possible)	Can't be used	See P. 113

CC: Call center

Determine equivalent transmitted torque

Determine service factor (SF) (P.92)

Determine equivalent transmitted torque $Te = T\ell \times S.F.$

$T\ell$: Actual torque transmitted by gear motor's slow speed shaft (N·m)

Te: Equivalent transmitted torque (N·m)

Make initial model selection

: Gear head efficiency. See Table 5 on p. 180.

Determine reduction ratio $i \fallingdotseq 1300 / B$

Make initial gear head selection Select model for which $Te \leq Tout$

Determine motor shaft's maximum speed and minimum speed $N_L = A \times i$, $N_H = B \times i$

Convert equivalent transmitted torque to motor shaft torque $T_M = Te / i / \eta \times 100$

Check motor temperature rise Operate motor so that its housing surface temperature doesn't exceed 90!!C. The formula below provides an estimate of operation limit torque.
$TM \leqq (T_{1200} - T_{90}) \times (NL - 90)/1{,}110 + T90$

A : Output shaft's minimum speed (r/min)
B : Output shaft's maximum speed (r/min)
Tout: Allowable torque of gear head (N·m)

Select the gear head one size larger
NL : Motor's minimum speed (r/min)
NH : Motor's maximum speed (r/min)
η : Gear head efficiency. See Table 5 on p. 180.
T_M : Te converted to motor shaft torque (N·m)
T_{1200}: Operation limit torque at 1,200 r/min (N·m)
T_{90} : Operation limit torque at 90 r/min (N·m)

Check motor's starting torque

Convert equivalent transmitted torque to motor shaft torque $T_{MS} = T_M / 0.8$

Check motor starting torque T_{MS} must be no more than the starting torque in the selection table

T_{MS}: Motor starting torque (N·m)
0.8 : Safety coefficient for ensuring starting torque

Check load inertia

Calculate load's moment of inertia See p. 92 for how to make the calculation

Convert it to motor shaft moment of inertia $J_M = J/i^2$ (when reduction ratio is less than 50)
$J_M = J/50^2$ (when reduction ratio is 50 or more)

Check allowable load inertia J_M must be no more than the allowable value of the load's moment of inertia given on p. 12

J : Load's moment of inertia (kg·m²)
J_M: Converted motor shaft's moment of inertia (kg·m²)

Check radial load

Calculate radial load $Pr = T\ell \times Cf \times S.F. / R$

Check radial load Pr must be no more than the output shaft's allowable radial load given in Table 7 on p. 181

Pr : Shaft radial load (N)
Cf : Load connection factor
SF : Service factor
R : Pitch (radius of circle) of sprocket, gear, pulley or other drive component (m)
Pro : Output shaft's allowable radial load (N)

Select model, dimensions

Select model Model specifications are given in the 'Model' column on the relevant page

Check dimensions in diagram Dimensions are shown in the diagram on the relevant page

Overview
Induction
Reversible
Electromagnetic brakes
Terminal boxes
Speed controller (Overview)
Unit type
Socket type
Speed controller (Induction)
Speed controller (Reversible)
Speed controller (Electro-magnetic brake)
Brake Packs
Options
Technical Information
Overview
6W
15W
25W
40W
60W
90W

Overview of speed controllers (Service factor)

Service factor (S. F.)

- Service factors are designed for 8 hours of per day with a uniform load.

Table 2. Service factor (S. F.)

Load condition \ Operation time	Up to 8 hours/day	Applications
Uniform load	1	Continuous load in one direction
Moderate shock load	1.5	Frequent changes of motor direction
Shock load	2	Instant changes of motor direction/stops

Shaft radial load and thrust load

- Calculate the shaft radial load when attaching a chain sprocket or pulley.
- The shaft radial load is calculated by the formula below. It must be smaller than the allowable radial load of the output shaft given table 7 on P.181.

$$\text{Shaft radial load (Pr)} = \frac{P_\ell \times Cf \times S.F.}{R} \text{ [N]}$$

P_ℓ : Actual torque transmitted by slow speed shaft (N·m)
Cf : Load connection factor (see Table 3)
R : Pitch (radius of circle) of sprocket, gear, pulley or other drive component (m)

Table 3. Load connection factor (Cf)

Type of connection	Cf
Chain	1
Gear	1.25
Pulley	1.5

Load moment of inertia

- The converted motor shaft load moment of inertia is calculated by the following formula:

$J_M = J/i^2$ (when reduction ratio is less than 50)
$J_M = J/50^2$ (when reduction ratio is 50 or more)

i : Reduction ratio
J : Load moment of inertia (kg·m²)
J_M : Converted motor shaft load moment of inertia (kg·m²)

- Note that if the motor is used with a load moment of inertia exceeding the corresponding allowable valbe(given table4.)gears and bearings will quickly become damaged.

Table 4. Allowable values for converted motor shaft load moment of inertia (10^{-4} kg·m²)

Motor size	Motor power (W)	1ph
A6□06	6	0.05
A7□15	15	0.15
A8□25	25	0.30
A9□40	40	0.75
A9□60	60	1.00
A9□90	90	1.00

□in motor size indicates motor type
U : Unit type
HM : Socket type Induction
HR : Socket type Reversible
HR : Socket type W/Electromagnetic brake

Overview of speed controllers (Moment of inertia)

Calculation of moment of inertia J

(1) Moment of inertia of rotating motion

Rotating center meets gravity center		Rotating center dosen't meets gravity center	
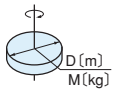	$J=\frac{1}{8}MD^2$ 〔kg·m²〕	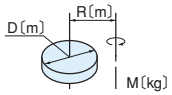	$J=\frac{M}{4}\left(\frac{1}{2}D^2+4R^2\right)$ 〔kg·m²〕
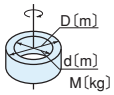	$J=\frac{1}{8}M(D^2+d^2)$ 〔kg·m²〕	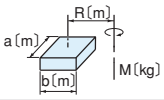	$J=\frac{M}{4}\left(\frac{a^2+b^2}{3}+4R^2\right)$ 〔kg·m²〕
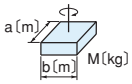	$J=\frac{1}{12}M(a^2+b^2)$ 〔kg·m²〕	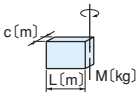	$J=\frac{1}{12}M(4L^2+C^2)$ 〔kg·m²〕

(2) Moment of inertia of rectilinear motion

General motion	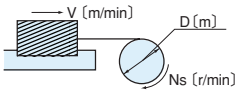	$J=\frac{M}{4}\left(\frac{V}{\pi\cdot Ns}\right)^2=\frac{M}{4}D^2$ 〔kg·m²〕
Horizontal motion by conveyor	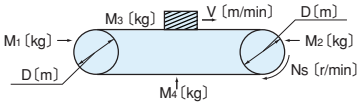	$J=\frac{M}{4}\left(\frac{M_1+M_2}{2}+M_3+M_4\right)\times D^2$ 〔kg·m²〕
Horizontal motion by screw	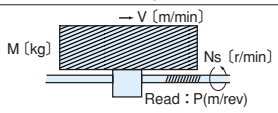	$J=\frac{M}{4}\left(\frac{V}{\pi\cdot Ns}\right)^2=\frac{M}{4}\left(\frac{P}{\pi}\right)^2$ 〔kg·m²〕
Vertical motion by winch	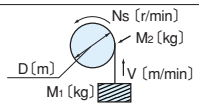	$J=\frac{M_1D^2}{4}+\frac{1}{8}M_2D^2$ 〔kg·m²〕

(3) Calculation of moment of inertia at defferent rotating speeds

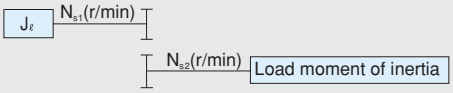

$$J_\ell=\left(\frac{N_{s2}}{N_{s1}}\right)^2 J$$

MEMO

BIBUS

BIBUS s.r.o.
+420 547 125 300
www.bibus.cz

Unit-type speed control motors

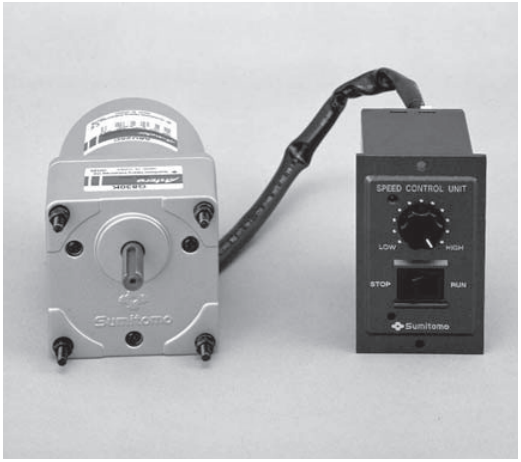

∗Gear head and induction motor are sold separately.

Unit-type speed control motors

- Product sets consisting of special motors, and unit-type speed controllers that can adjust the motor speed
- Controllers and special motors can be easily wired using special wiring.
- Speed range:
  50 Hz: 90 to 1,400 r/min
  60 Hz: 90 to 1,700 r/min
- Motors are induction motors with built-in tachogenerators (TG).
- Motors stop naturally using load torque. Motors can't be stopped instantly.
- Motor must be completely stopped before motor operation direction can be switched.
- Time rating: Continuous
- Built-in condenser (except for than 60/90 W, 100 V class products).

Astero™

Overview
Induction
Reversible
Electromagnetic brakes
Terminal boxes
Speed controller (Overview)
Unit type (Overview)
Socket type
Speed controller (Induction)
Speed controller (Reversible)
Speed controller (Electro-magnetic brake)
Brake Packs
Options
Technical Information
Overview
6W
15W
25W
40W
60W
90W

Overview of unit-type speed control motors (Specifications)

Table 1. Unit-type speed control motors standard specifications

	Item	Induction motors Single-phase motor
Motor	Capacity range	6W～90W 4poles
	Protection method Enclosure	6W～40W：IP23 Totally enclosed non ventilated 60W～：IP20 Totally enclosed fan cooled type
	Power source	100V 50/60Hz、110V 60Hz 200V 50/60Hz、220V 60Hz 220～240V 50Hz
	Insulation	CE Marking, Class E（120℃）
	Time rating	Continuous
	Starting method	Condenser running
	Lead wires (with connector)	6W～40W：Motor 3 wires UL Style 3266 20AWG, TG 2 wires UL Style 1007 22AWG 60W～：Motor 3 wires UL Style 3266 20AWG, TG 2 wires UL Style 1007 22AWG, Fan 2 wires UL Style 3266 20AWG
	Standard	CE Marking (Low voltage direction)
	Insulation resistance	At least 100MΩ when measured with a 500V DC meager between the motor coil and case at normal temperature and humidity after motor has reached rated torque.
	Insulation withstand voltage	Normal function when a 1500V,50/60Hz current is applied between the motor coil and case for 1 minute at normal temperature and humidity after the motor has reached rated torque.
	Temperature rise	The temperature of motor surface should be no more than 90℃ when measured by the pre scribed method after the motor has reached rated torque.
	Overheating protector (TP)	Built in thermal protect（auto restore type）Release:120±5℃, Restore:77±5℃
Controller	Insulation resistance	At least 100MΩ when measured with a 500V DC meager between Input and FG terminals.
	Withstand voltage	1500V,50/60Hz current is applied between Input and FG terminals for 1 minute.
Gear	Lubrication method	Grease lubrication. Grease is loaded at shipment.
Paint	Color	Astero silver
Ambient conditions	Locations	Indoors（Minimal dust and humidity）
	Temperature	-10～40℃
	Humidity	Under 85%
	Elevation	Under 1,000m
	Atmosphere	Well ventilated location, free of corrosive gases, explosive gases, vapors and dust.

Overview of unit-type speed control motors (Characteristics)

1. Characteristics of unit-type speed controllers

Unit-type speed controllers are a unit product containing a controller and motor. The controller and motor can be connected in a single operation, without the need for separate connections. The motor speed is easily adjusted using the externally attached speed volume. Components such as the speed control circuit, motor condenser and speed volume are attached to the controller (some models have built-in condenser). Unit-type speed controllers have no instant stop function. The separately-sold extension cords can be used to control motor speed with the motor and controller up to 2.0 meters apart.

2. How to use

1) Operation
The controller and motor lead wires are connected by connectors. The plug cord connects to the AC power supply. At the time of factory shipment, the controller is connected so that the motor shaft turns clockwise (as seen from the motor's output shaft) when the controller's RUN/STOP switch is set to RUN.

2) Speed adjustment
The speed is adjusted using the speed volume on the controller. The motor speed can be adjusted between 90 and 1,400 RPM for 50 Hz operation, and between 90 and 1,700 RPM for 60 Hz operation.

3) Stop
Setting the controller's RUN/STOP switch to STOP stops the motor. Since this switch doesn't turn the power ON/OFF, a separate power switch should be installed and turned OFF to stop the motor for extended periods.

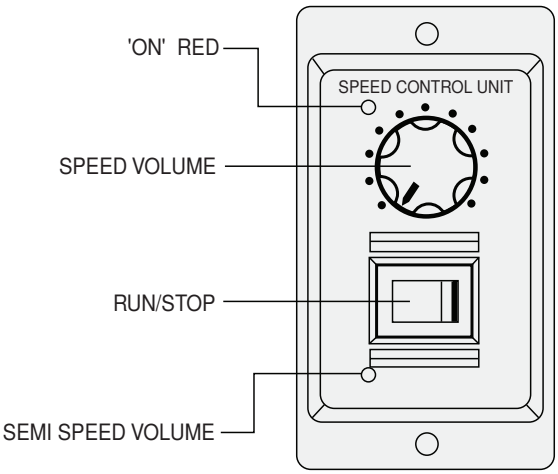

Fig 1. Front view of unit-type speed controllers

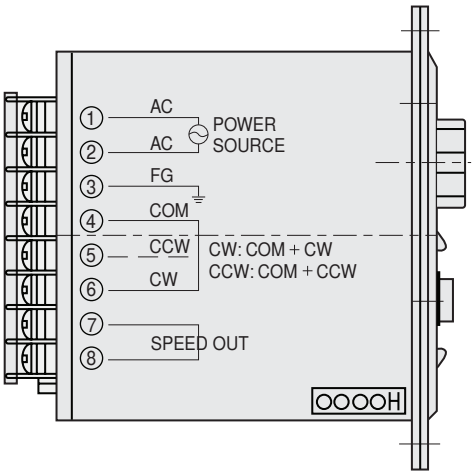

Fig 2. Side view of unit-type speed controllers

Overview
Induction
Reversible
Electromagnetic brakes
Terminal boxes
Speed controller (Overview)
Unit type (Overview)
Socket type
Speed controller (Induction)
Speed controller (Reversible)
Speed controller (Electro-magnetic brake)
Brake Packs
Options
Technical Information
Overview
6W
15W
25W
40W
60W
90W

Overview of unit-type speed control motors (Characteristics)

4) Switching the operation direction (Fig 3)
Connect the power supply to AC ①and AC ②. Always turn the power OFF before making the connections.

- Continuous single-direction operation
  Clockwise operation: Short the COM ④ and CW ⑥ terminals.
  Counterclockwise operation: Short the COM ④ and CCW ⑤ terminals.

- Switching the operation direction
  To switch the operation direction, install the power switch (SW1) and forward/reverse operation switch (SW2) as shown in Fig3. You can't switch between forward and reverse operation instantly. Turn off the power switch (SW1), then operate the forward/reverse
  operation switch (SW2) after the motor has stopped completely.

5) External speed display
⑦ and ⑧are the motor speed output terminals. Connect them to a 10 VAC display with a 2,000 r/min display capacity.

1.6~40W Class100 & 200V
60~90W Class 200V

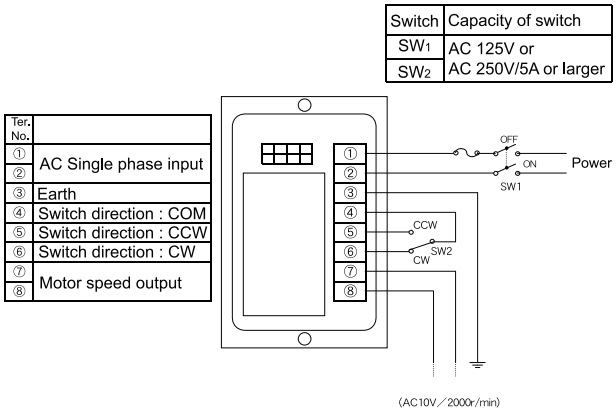

2.60~90W Class100V

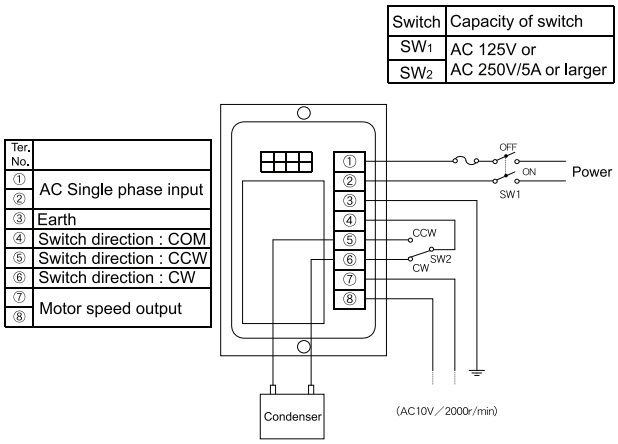

Fig 3. Rear view of unit-type speed controllers

3. Attaching the unit

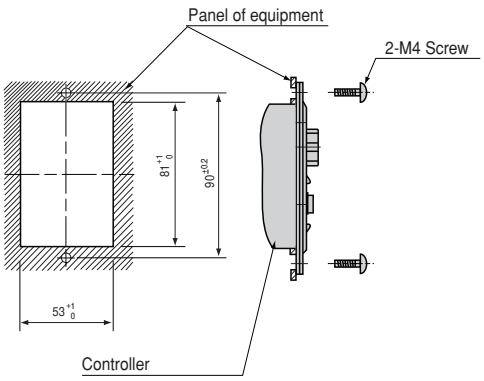

Overview of unit-type speed control motors (Dimensions)

4. Dimensions
6～40W Class 100 & 200V
60～90W Class 200V
(International condenser type)

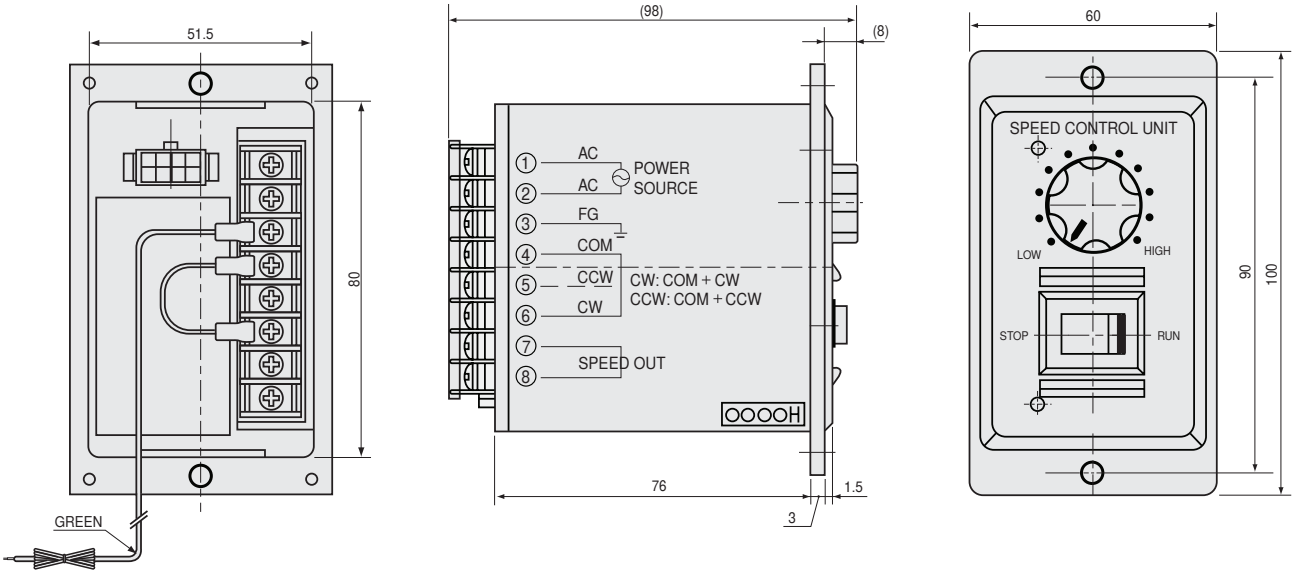

60～90W Class 200V
(External condenser type)

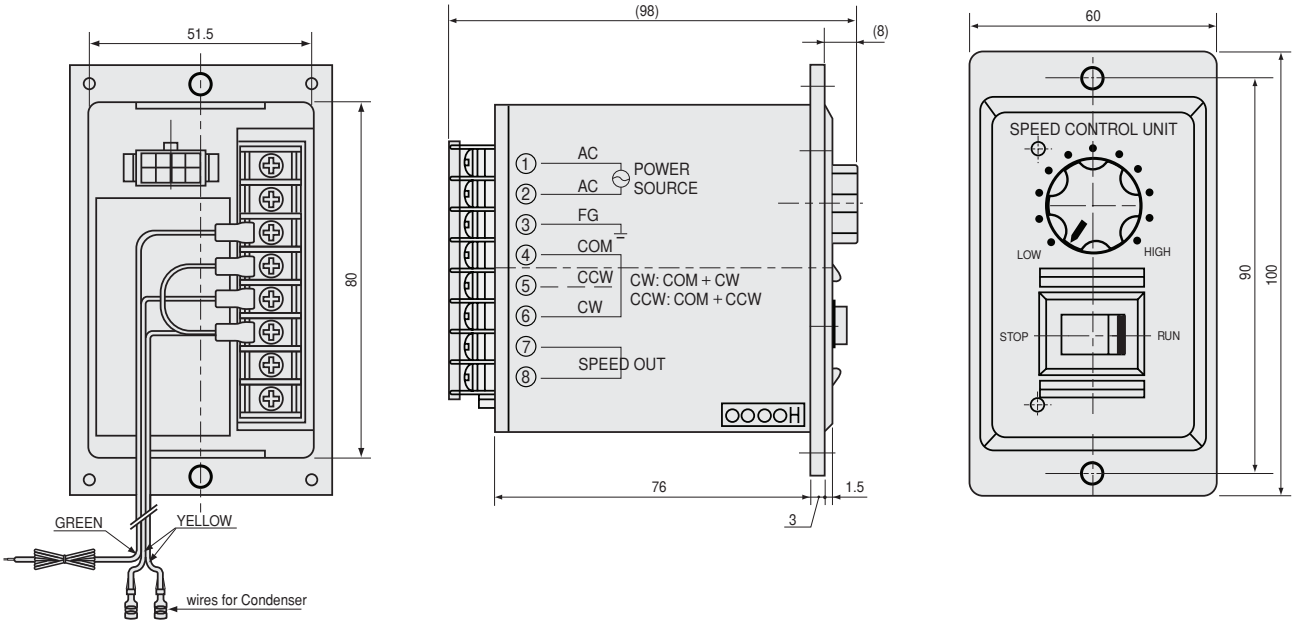

Overview
Induction
Reversible
Electromagnetic brakes
Terminal boxes
Speed controller (Overview)
Unit type (Overview)
Socket type
Speed controller (Induction)
Speed controller (Reversible)
Speed controller (Electro-magnetic brake)
Brake Packs
Options
Technical Information
Overview
6W
15W
25W
40W
60W
90W

Motor specification table

Frame size mm sq	Motor Type	Controller Type	Poles	Output	Voltage	Frequency	Time ratiang	Speed range	Allowable torque At 1200r/min		Allowable torque At 90r/min		Starting torque		Over-heating pro-tection	Standard	Condenser
				(W)	(V)	(Hz)		(r/min)	(N·m)	(Kgf·cm)	(N·m)	(Kgf·cm)	(N·m)	(Kgf·cm)			(μF)
60	A6U06A	CAU06A	4	6	1ph100	50	Cont.	90-1400	0.045	0.45	0.028	0.28	0.040	0.40	ZP	CE	2.5
						60		90-1700									
					1ph110	60		90-1700	0.050	0.50	0.030	0.30	0.050	0.50			
	A6U06C	CAU06C	4	6	1ph200	50	Cont.	90-1400	0.045	0.45	0.028	0.28	0.040	0.40	ZP	CE	0.7
						60		90-1700									
					1ph220	60		90-1700	0.050	0.50	0.030	0.30	0.050	0.50			
	A6U06D	CAU06D	4	6	1ph220	50	Cont.	90-1400	0.055	0.55	0.029	0.29	0.045	0.45	ZP	CE	0.7
					1ph240				0.065	0.65			0.055	0.55			

- To ensure that you order the correct model, check the voltage in use before ordering.
- All the motor types in the table above are CE Mark and thermal protected (TP) is built in the coil.

Gear head rating torque table

Gear head type: G6□D

Frequency	Reduction ratio		3	3.6	5	6	7.5	9	10	12.5	15	18	20	25
50Hz	Ouput speed	r/min	500	417	300	250	200	166	150	120	100	83	75	60
	Rating torque	N·m	0.13	0.15	0.21	0.26	0.31	0.38	0.42	0.53	0.63	0.76	0.76	0.95
		Kgf·cm	1.3	1.5	2.1	2.6	3.2	3.9	4.3	5.4	6.4	7.7	7.7	9.7
60Hz	Ouput speed	r/min	600	500	360	300	240	200	180	144	120	100	90	72
	Rating torque	N·m	0.10	0.13	0.17	0.21	0.26	0.30	0.34	0.43	0.51	0.62	0.62	0.76
		Kgf·cm	1.0	1.3	1.7	2.1	2.6	3.1	3.5	4.4	5.2	6.3	6.3	7.8

Gear head type: G6□D

Frequency	Reduction ratio		30	36	40	50	60	75	90	100	120	150	180	200
50Hz	Ouput speed	r/min	50	41	37	30	25	20	16	15	12	10	8	7.5
	Rating torque	N·m	1.14	1.36	1.52	1.72	2.06	2.57	2.94	2.94	2.94	2.94	2.94	2.94
		Kgf·cm	11.6	13.9	15.5	17.5	21.0	26.2	30.0	30.0	30.0	30.0	30.0	30.0
60Hz	Ouput speed	r/min	60	50	45	36	30	24	20	18	15	12	10	9
	Rating torque	N·m	0.92	1.11	1.24	1.39	1.67	2.09	2.50	2.78	2.94	2.94	2.94	2.94
		Kgf·cm	9.4	11.3	12.6	14.2	17.0	21.3	25.5	28.4	30.0	30.0	30.0	30.0

- □ in gear head type names indicates the reduction ratio.
- Intermediate gear heads are for use with gear heads having a reduction ratio of 30 or more. When an intermediate gear head is used, the rating torque is 1.96 N•m (20 kgf•cm) for a reduction ratio between 30 and 40, and 2.94 N•m (30 kgf•cm) for a reduction ratio of 50 or more.
- Rotation direction in shaded boxes are in the same direction as the motor rotation. Direction in unshaded boxes are in the opposite direction as the motor rotation.
- Rotation speed don't include motor slippage. The actual values will be between 2 and 20% lower, depending on the load.

Dimensions

Gear motors

Motor type : A6U06□

Gear head type : G6□D

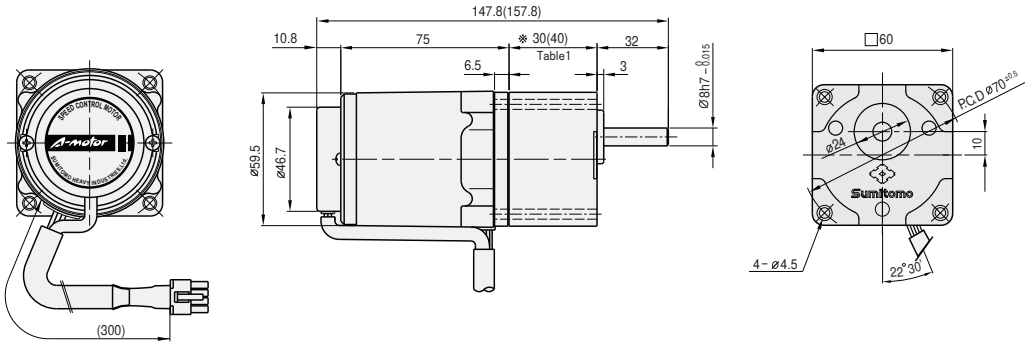

Gear head output shaft detail

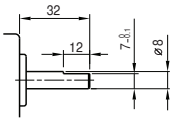

Table1. Gear head length

Gear head size	Length(mm)
G63D～G618D	30
G620D～G6200D	40

Table2. Weight

		Weight(kg)
Motor		0.76
Gear head	G63D ～ G618D	0.24
	G620D ～ G640D	0.30
	G650D ～ G6200D	0.33
Intermediate gear head		0.18

Motor

Type : G6XH10

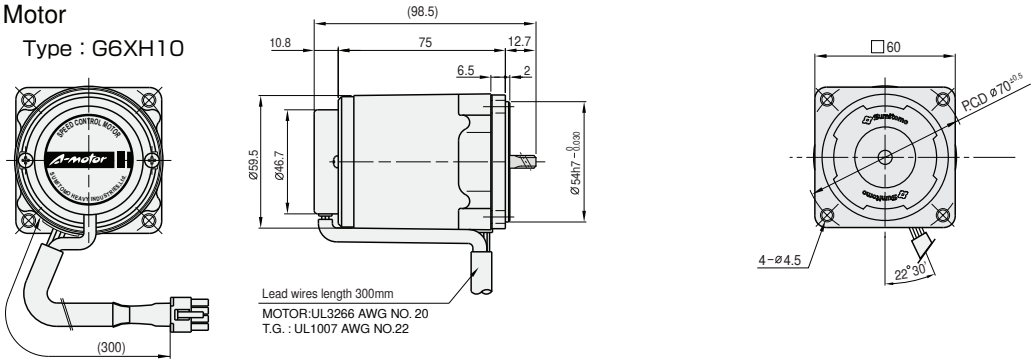

Intermediate gear head

Type: G6XH10

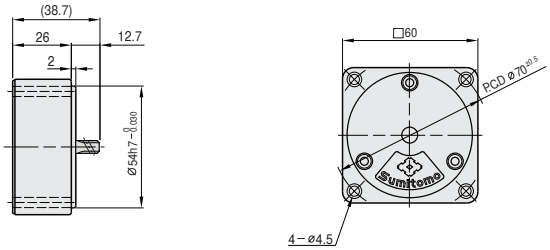

Related information

Selection procedure: p. 91

Options: Induction. p. 169

Standard specifications: p. 96

Technical information: p. 175

15W □70mm

Unit-type speed control motors
Induction motors

Motor specification table

Frame size mm sq	Motor Type	Controller Type	Poles	Output	Voltage	Frequency	Time ratiang	Speed range	Allowable torque At 1200r/min		Allowable torque At 90r/min		Starting torque		Over-heating pro-tection	Standard	Condenser
				(W)	(V)	(Hz)		(r/min)	(N·m)	(Kgf·cm)	(N·m)	(Kgf·cm)	(N·m)	(Kgf·cm)			(μF)
70	A7U15A	CAU15A	4	15	1ph100	50	Cont.	90-1400	0.100	1.00	0.030	0.30	0.079	0.79	TP	CE	5.0
						60		90-1700	0.080	0.80							
					1ph110	60		90-1700	0.125	1.25	0.045	0.45	0.095	0.95			
	A7U15C	CAU15C	4	15	1ph200	50	Cont.	90-1400	0.100	1.00	0.030	0.30	0.080	0.80	TP	CE	1. 2
						60		90-1700	0.080	0.80			0.079	0.79			
					1ph220	60		90-1700	0.125	1.25	0.045	0.45	0.095	0.95			
	A7U15D	CAU15D	4	15	1ph220	50	Cont.	90-1400	0.100	1.00	0.035	0.35	0.070	0.70	TP	CE	0. 9
					1ph240				0.120	1.20			0.085	0.85			

- To ensure that you order the correct model, check the voltage in use before ordering.
- All the motor types in the table above are CE Mark and thermal protected (TP) is built in the coil.

Gear head rating torque table

Gear head type: G7□K														
Frequency	Reduction ratio		3	3.6	5	6	7.5	9	10	12.5	15	18	20	25
50Hz	Ouput speed	r/min	500	417	300	250	200	166	150	120	100	83	75	60
	Rating torque	N·m	0.31	0.38	0.53	0.64	0.79	0.95	1.06	1.32	1.59	1.90	1.90	2.37
		Kgf·cm	3.2	3.9	5.4	6.5	8.1	9.7	10.8	13.5	16.2	19.4	19.4	24.2
60Hz	Ouput speed	r/min	600	500	360	300	240	200	180	144	120	100	90	72
	Rating torque	N·m	0.29	0.35	0.50	0.60	0.75	0.89	0.99	1.25	1.49	1.79	1.79	2.24
		Kgf·cm	3.0	3.6	5.1	6.1	7.6	9.1	10.1	12.7	15.2	18.2	18.2	22.8

Gear head type: G7□K														
Frequency	Reduction ratio		30	36	40	50	60	75	90	100	120	150	180	200
50Hz	Ouput speed	r/min	50	41	37	30	25	20	16	15	12	10	8	7.5
	Rating torque	N·m	2.85	3.42	3.81	4.28	4.90	4.90	4.90	4.90	4.90	4.90	4.90	4.90
		Kgf·cm	29.1	34.9	38.8	43.6	50.0	50.0	50.0	50.0	50.0	50.0	50.0	50.0
60Hz	Ouput speed	r/min	60	50	45	36	30	24	20	18	15	12	10	9
	Rating torque	N·m	2.68	3.22	3.58	4.02	4.83	4.90	4.90	4.90	4.90	4.90	4.90	4.90
		Kgf·cm	27.3	32.8	36.5	41.0	49.2	50.0	50.0	50.0	50.0	50.0	50.0	50.0

- □ in gear head type names indicates the reduction ratio.
- Intermediate gear heads are for use with gear heads having a reduction ratio of 25 or more. When an intermediate gear head is used, the rating torque is 3.92 N•m (40 kgf•cm) for a reduction ratio between 25 and 40, and 4.90 N•m (50 kgf•cm) for a reduction ratio of 50 or more.
- Rotation direction in shaded boxes are in the same direction as the motor rotation. Direction in unshaded boxes are in the opposite direction as the motor rotation.
- Rotation speed don't include motor slippage. The actual values will be between 2 and 20% lower, depending on the load.

Dimensions

Gear motors

Motor type : A7U15□

Gear head type : G7□K

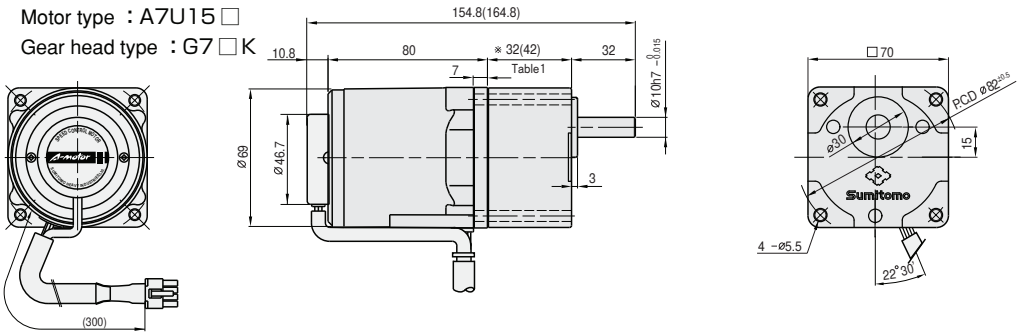

Gear head output shaft detail

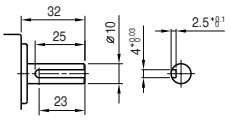

key size

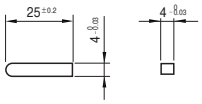

Table1. Gear head length

Gear head size	Length(mm)
G73K～G718K	32
G720K～G7200K	42

Table2. Weight

		Weight(kg)
Motor		1.12
Gear head	G73K ～ G718K	0.38
	G720K ～ G740K	0.47
	G750K ～ G7200K	0.52
Intermediate gear head		0.32

Motor

Type : A7U15□

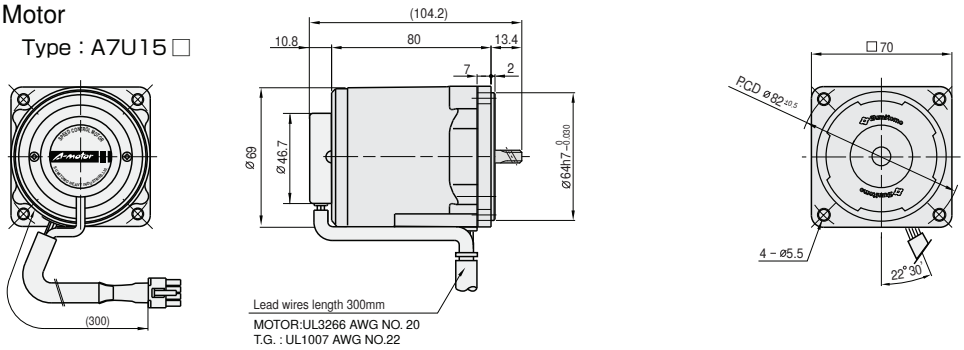

Intermediate gear head

Type: G7XH10

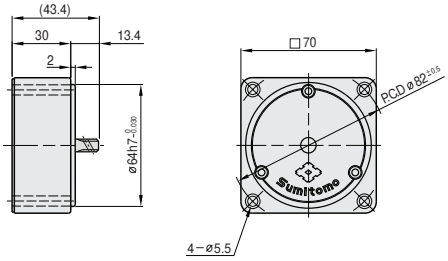

Related information

Selection procedure: p. 91

Options: Induction. p. 169

Standard specifications: p. 96

Technical information: p. 175

25W □80mm

Unit-type speed control motors

Induction motors

Motor specification table

Frame size mm sq	Motor Type	Controller Type	Poles	Output	Voltage	Frequency	Time ratiang	Speed range	Allowable torque At 1200r/min		Allowable torque At 90r/min		Starting torque		Over-heating pro-tection	Standard	Condenser
				(W)	(V)	(Hz)		(r/min)	(N·m)	(Kgf·cm)	(N·m)	(Kgf·cm)	(N·m)	(Kgf·cm)			(μF)
80	A8U25A	CAU25A	4	25	1ph100	50	Cont.	90-1400	0.160	1.60	0.055	0.55	0.100	1.00	TP	CE	6.0
						60		90-1700	0.150	1.50			0.104	1.04			
					1ph110	60		90-1700	0.200	2.00	0.050	0.50	0.122	1.22			
	A8U25C	CAU25C	4	25	1ph200	50	Cont.	90-1400	0.160	1.60	0.055	0.55	0.100	1.00	TP	CE	1.5
						60		90-1700	0.150	1.50			0.104	1.04			
					1ph220	60		90-1700	0.200	2.00	0.050	0.50	0.122	1.22			
	A8U25D	CAU25D	4	25	1ph220	50	Cont.	90-1400	0.190	1.90	0.047	0.47	0.135	1.35	TP	CE	1.5
					1ph240				0.200	2.00			0.162	1.62			

- To ensure that you order the correct model, check the voltage in use before ordering.
- All the motor types in the table above are CE Mark and thermal protected (TP) is built in the coil.

Gear head rating torque table

Gear head type: G8□K														
Frequency	Reduction ratio		3	3.6	5	6	7.5	9	10	12.5	15	18	20	25
50Hz	Ouput speed	r/min	500	417	300	250	200	166	150	120	100	83	75	60
	Rating torque	N·m	0.52	0.63	0.87	1.05	1.31	1.57	1.74	2.19	2.62	3.15	3.15	3.94
		Kgf·cm	5.3	6.4	8.9	10.7	13.4	16.0	17.8	22.3	26.7	32.1	32.1	40.2
60Hz	Ouput speed	r/min	600	500	360	300	240	200	180	144	120	100	90	72
	Rating torque	N·m	0.43	0.51	0.72	0.85	1.07	1.28	1.43	1.78	2.15	2.57	2.58	3.22
		Kgf·cm	4.4	5.2	7.3	8.7	10.9	13.1	14.6	18.2	21.9	26.2	26.3	32.9

Gear head type: G8□K														
Frequency	Reduction ratio		30	36	40	50	60	75	90	100	120	150	180	200
50Hz	Ouput speed	r/min	50	41	37	30	25	20	16	15	12	10	8	7.5
	Rating torque	N·m	4.72	5.66	6.29	7.12	7.84	7.84	7.84	7.84	7.84	7.84	7.84	7.84
		Kgf·cm	48.2	57.8	64.2	72.6	80.0	80.0	80.0	80.0	80.0	80.0	80.0	80.0
60Hz	Ouput speed	r/min	60	50	45	36	30	24	20	18	15	12	10	9
	Rating torque	N·m	3.86	4.64	5.16	5.82	6.99	7.84	7.84	7.84	7.84	7.84	7.84	7.84
		Kgf·cm	39.4	47.3	52.6	59.4	71.3	80.0	80.0	80.0	80.0	80.0	80.0	80.0

- □ in gear head type names indicates the reduction ratio.
- Intermediate gear heads are for use with gear heads having a reduction ratio of 25 or more. When an intermediate gear head is used, the rating torque is 5.88 N•m (60 kgf•cm) for a reduction ratio between 25 and 40, and 7.84 N•m (80 kgf•cm) for a reduction ratio of 50 or more.
- Rotation direction in shaded boxes are in the same direction as the motor rotation. Direction in unshaded boxes are in the opposite direction as the motor rotation.
- Rotation speed don't include motor slippage. The actual values will be between 2 and 20% lower, depending on the load.

Dimensions

Gear motors

Motor type : A8U25 □

Gear head type : G8 □ K

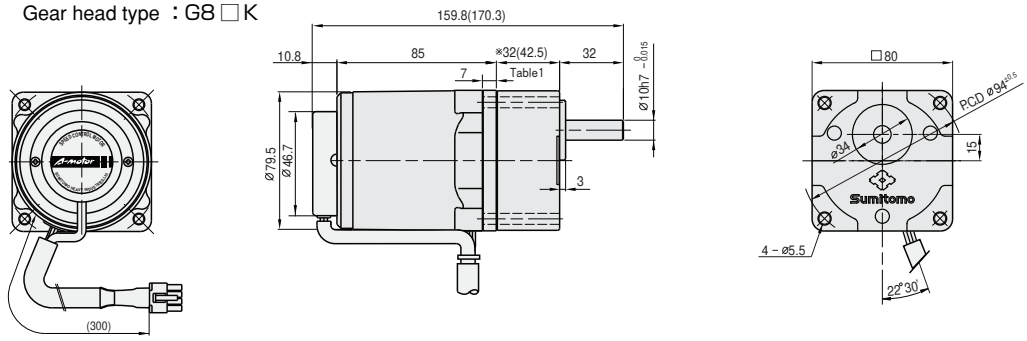

Gear head output shaft detail

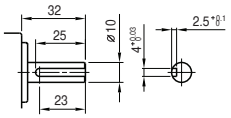

Key size

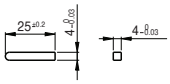

Table1. Gear head length

Gear head size	Length (mm)
G83K ～G818K	32
G820K ～G8200K	42.5

Table2. Weight

		Weight(kg)
Motor		1.60
Gear head	G83K ～ G818K	0.43
	G820K ～ G840K	0.57
	G850K ～ G8200K	0.61
Intermediate gear head		0.43

Motor

Type : A8U25 □

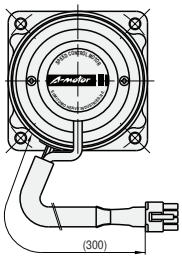

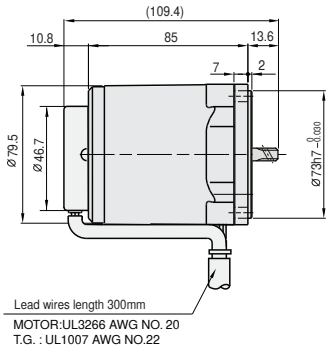

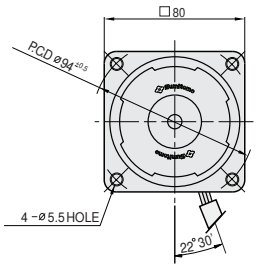

Intermediate gear head

Type: GBXH10

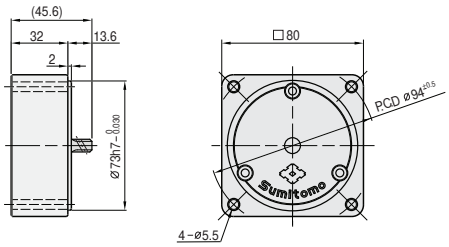

Related information

Selection procedure: p. 91

Options: Induction. p. 169

Standard specifications: p. 96

Technical information: p. 175

40W □90mm

Unit-type speed control motors

Induction motors

Motor specification table

Frame size mm sq	Motor Type	Controller Type	Poles	Output	Voltage	Frequency	Time ratiang	Speed range	Allowable torque At 1200r/min		Allowable torque At 90r/min		Starting torque		Over-heating pro-tection	Standard	Condenser
				(W)	(V)	(Hz)		(r/min)	(N·m)	(Kgf·cm)	(N·m)	(Kgf·cm)	(N·m)	(Kgf·cm)			(μF)
90	A9U40A	CAU40A	4	40	1ph100	50	Cont.	90-1400	0.270	2.70	0.057	0.57	0.200	2.00	TP	CE	10.0
						60		90-1700	0.240	2.40							
					1ph110	60		90-1700	0.300	3.00	0.070	0.70	0.241	2.41			
	A9U40C	CAU40C	4	40	1ph200	50	Cont.	90-1400	0.270	2.70	0.057	0.57	0.200	2.00	TP	CE	2.5
						60		90-1700	0.240	2.40							
					1ph220	60		90-1700	0.300	3.00	0.070	0.70	0.241	2.41			
	A9U40D	CAU40D	4	40	1ph220	50	Cont.	90-1400	0.300	3.00	0.063	0.63	0.181	1.81	TP	CE	2.0
					1ph240				0.320	3.20			0.212	2.12			

- To ensure that you order the correct model, check the voltage in use before ordering.
- All the motor types in the table above are CE Mark and thermal protected (TP) is built in the coil.

Gear head rating torque table

Gear head type: G9A□K														
Frequency	Reduction ratio		3	3.6	5	6	7.5	9	10	12.5	15	18	20	25
50Hz	Ouput speed	r/min	500	417	300	250	200	166	150	120	100	83	75	60
	Rating torque	N·m	0.81	0.97	1.35	1.62	2.03	2.43	2.70	3.37	4.05	4.86	4.86	6.09
		Kgf·cm	8.3	9.9	13.8	16.5	20.7	24.8	27.5	34.4	41.3	49.6	49.6	62.1
60Hz	Ouput speed	r/min	600	500	360	300	240	200	180	144	120	100	90	72
	Rating torque	N·m	0.67	0.80	1.11	1.33	1.67	2.00	2.23	2.78	3.33	4.00	4.01	5.01
		Kgf·cm	6.8	8.2	11.3	13.6	17.0	20.4	22.7	28.4	34.0	40.8	40.9	51.1

Gear head type: G9A□K														
Frequency	Reduction ratio		30	36	40	50	60	75	90	100	120	150	180	200
50Hz	Ouput speed	r/min	50	41	37	30	25	20	16	15	12	10	8	7.5
	Rating torque	N·m	7.30	8.76	9.73	9.80	9.80	9.80	9.80	9.80	9.80	9.80	9.80	9.80
		Kgf·cm	74.5	89.4	99.3	100.0	100.0	100.0	100.0	100.0	100.0	100.0	100.0	100.0
60Hz	Ouput speed	r/min	60	50	45	36	30	24	20	18	15	12	10	9
	Rating torque	N·m	6.01	7.21	8.02	9.80	9.80	9.80	9.80	9.80	9.80	9.80	9.80	9.80
		Kgf·cm	61.3	73.6	81.8	100.0	100.0	100.0	100.0	100.0	100.0	100.0	100.0	100.0

- □ in gear head type names indicates the reduction ratio.
- When an intermediate gear head is used, the rating torque is 9.80N・m(100kgf・cm).
- Rotation direction in shaded boxes are in the same direction as the motor rotation. Direction in unshaded boxes are in the opposite direction as the motor rotation.
- Rotation speed don't include motor slippage. The actual values will be between 2 and 20% lower, depending on the load.

Condenser

Dimensions

Gear motors

Motor type : A9U40□

Gear head type : G9A□K

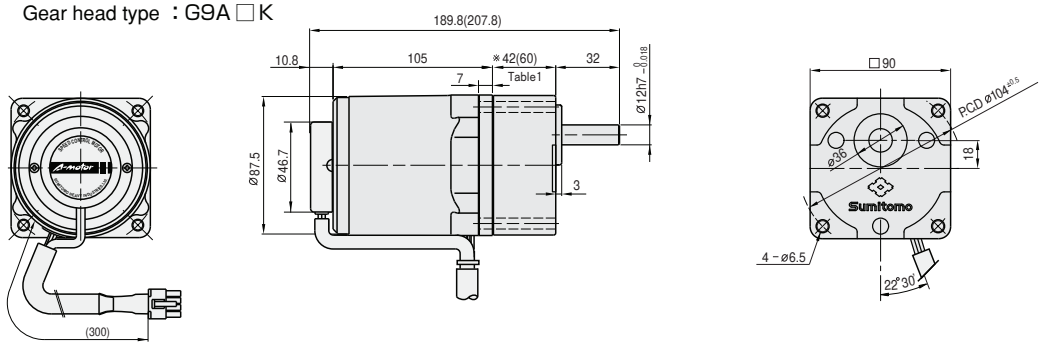

Gear head output shaft detail

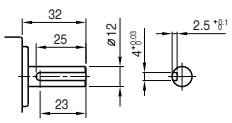

Key size

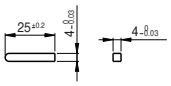

Table1. Gear head length

Gear head size	Length(mm)
G9A3K～G9A18K	42
G9A20K～G9A200K	60

Table2. Weight

		Weight(kg)
Motor		2.42
Gear head	G9A3K ～ G9A18K	0.73
	G9A20K ～ G9A40K	1.03
	G9A50K ～ G9A200K	1.13
Intermediate gear head		0.60

Motor

Type : A9U40□

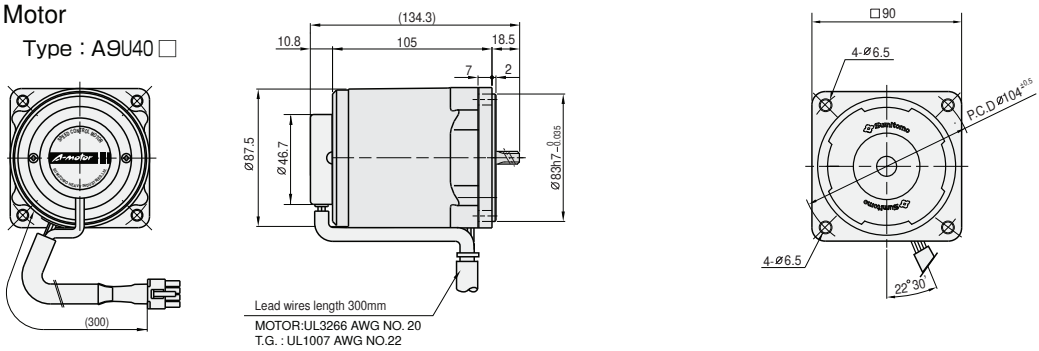

Intermediate gear head

Type: G9AXH10

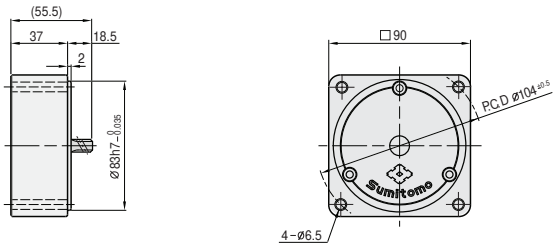

Related information

Selection procedure: p. 91

Options: Induction. p. 169

Standard specifications: p. 96

Technical information: p. 175

60W □90mm

Unit-type speed control motors
Induction motors

Motor specification table

Frame size mm sq	Motor Type	Controller Type	Poles	Output	Voltage	Frequency	Time ratiang	Speed range	Allowable torque At 1200r/min		Allowable torque At 90r/min		Starting torque		Over-heating pro-tection	Standard	Condenser
				(W)	(V)	(Hz)		(r/min)	(N·m)	(Kgf·cm)	(N·m)	(Kgf·cm)	(N·m)	(Kgf·cm)			(μF)
90	A9U60AH	CAU60A	4	60	1ph100	50	Cont.	90-1400	0.550	5.50	0.140	1.40	0.422	4.22	TP	CE	20. 0
						60		90-1700			0.160	1.60	0.431	4.31			
					1ph110	60		90-1700	0.490	4.90	0.200	2.00	0.531	5.31			
	A9U60CH	CAU60C	4	60	1ph200	50	Cont.	90-1400	0.550	5.50	0.140	1.40	0.422	4.22	TP	CE	5.0
						60		90-1700			0.160	1.60	0.431	4.31			
					1ph220	60		90-1700	0.490	4.90	0.200	2.00	0.531	5.31			
	A9U60DH	CAU60D	4	60	1ph220	50	Cont.	90-1400	0.490	4.90	0.140	1.40	0.323	3.23	TP	CE	3.5
					1ph240				0.500	5.00			0.386	3.86			

- The capacitor condenser depends on the voltage in use. Be sure to use the correct capacity for the voltage.
- The use of an incorrect condenser capacity can cause malfunctions. To ensure that you order the correct model, check the voltage in use before ordering.
- All the motor types in the table above are CE Mark and thermal protected (TP) is built in the coil.

Gear head rating torque table

Gear head type: G 9 B□K H

Frequency	Reduction ratio		3	3.6	5	6	7.5	9	10	12.5	15	18	20	25
50Hz	Ouput speed	r/min	500	417	300	250	200	166	150	120	100	83	75	60
	Rating torque	N·m	1.20	1.43	1.99	2.38	2.99	3.58	3.97	4.47	5.37	6.44	7.15	8.09
		Kgf·cm	12.2	14.6	20.3	24.3	30.4	36.5	40.5	45.6	54.8	65.7	73.0	82.5
60Hz	Ouput speed	r/min	600	500	360	300	240	200	180	144	120	100	90	72
	Rating torque	N·m	0.95	1.15	1.59	1.90	2.38	2.86	3.18	3.58	4.29	5.16	5.72	6.47
		Kgf·cm	9.7	11.7	16.2	19.4	24.3	29.2	32.4	36.5	43.8	52.6	58.4	66.0

Gear head type: G 9 B□K H

Frequency	Reduction ratio		30	36	40	50	60	75	90	100	120	150	180	200
50Hz	Ouput speed	r/min	50	41	37	30	25	20	16	15	12	10	8	7.5
	Rating torque	N·m	9.70	11.66	12.94	16.17	19.40	19.60	19.60	19.60	19.60	19.60	19.60	19.60
		Kgf·cm	99.0	119.0	132.0	165.0	198.0	200.0	200.0	200.0	200.0	200.0	200.0	200.0
60Hz	Ouput speed	r/min	60	50	45	36	30	24	20	18	15	12	10	9
	Rating torque	N·m	7.76	9.31	10.39	12.94	15.48	17.35	19.60	19.60	19.60	19.60	19.60	19.60
		Kgf·cm	79.2	95.0	106.0	132.0	158.0	177.0	200.0	200.0	200.0	200.0	200.0	200.0

- !! in gear head type names indicates the reduction ratio.
- Intermediate gear heads are for use with gear heads having a reduction ratio of 30 or more. When an intermediate gear head is used, the rating torque is 1.96 N•m (20 kgf•cm) for a reduction ratio between 30 and 40, and 2.94 N•m (30 kgf•cm) for a reduction ratio of 50 or more.
- Rotation direction in shaded boxes are in the same direction as the motor rotation. Direction in unshaded boxes are in the opposite direction as the motor rotation.
- Rotation speed don't include motor slippage. The actual values will be between 2 and 20% lower, depending on the load.

Condenser

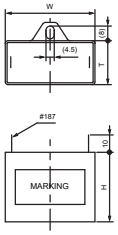

Motor type	Voltage	Capacity	Condenser type	W	T	H
	(V)	(μF)		(mm)	(mm)	(mm)
A9U60AH	1ph100	20.0	DMF-252006	58	36	39
	1ph110					

※Condensers are built in the controllers CAU60C and CAU60D

Dimensions

Gear motors

Motor type : A9U 60 □ H

Gear head type : G9B □ KH

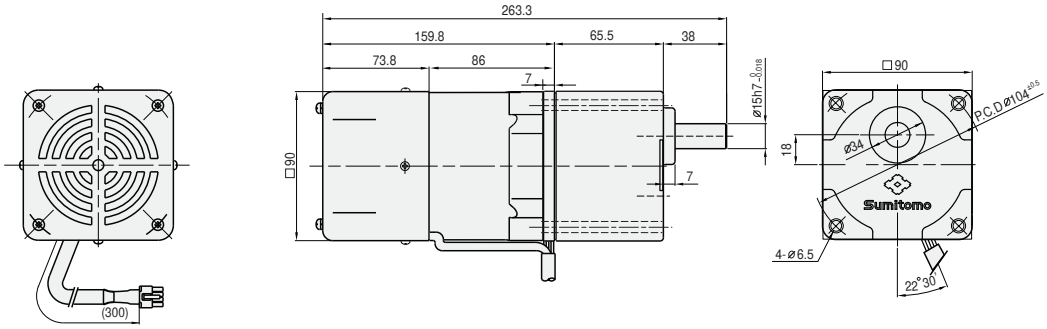

Gear head output shaft detail

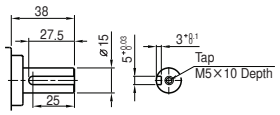

Key size

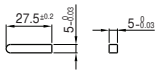

Table1. Weight

		Weight(kg)
Motor		2.93
Gear head	G9B3KH ~ G9B10KH	1.21
	G9B12.5KH ~ G9B20KH	1.30
	G9B25KH ~ G9B60KH	1.40
	G9B75KH ~ G9B200KH	1.45
Intermediate gear head		0.65

Motor

Type : A9U 60 □ H

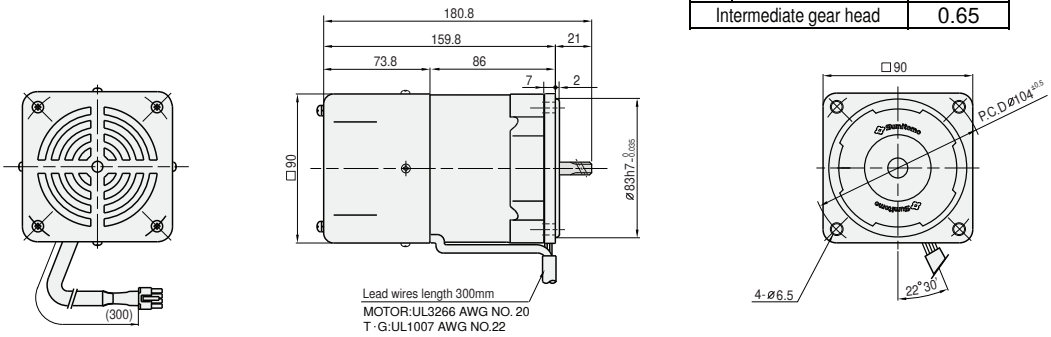

Intermediate gear head

Type: G9BXH10H

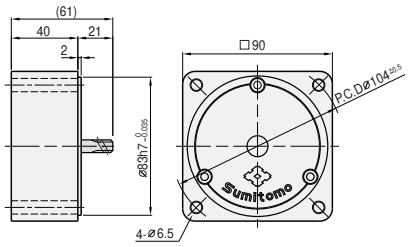

Related information

Selection procedure: p. 91

Options: Induction. p. 169

Standard specifications: p. 96

Technical information: p. 175

90W □90mm

Unit-type speed control motors
Induction motors

Motor specification table

Frame size mm sq	Motor Type	Controller Type	Poles	Output	Voltage	Frequency	Time ratiang	Speed range	Allowable torque At 1200r/min		Allowable torque At 90r/min		Starting torque		Over-heating pro-tection	Standard	Condenser
				(W)	(V)	(Hz)		(r/min)	(N·m)	(Kgf·cm)	(N·m)	(Kgf·cm)	(N·m)	(Kgf·cm)			(μF)
90	A9U90AH	CAU90A	4	90	1 ϕ 100	50	Cont.	90-1400	0.600	6.00	0.250	2.50	0.517	5.17	TP	CE	24. 0
						60		90-1700	0.550	5.50			0.493	4.93			
					1 ϕ 110	60		90-1700	0.730	7.30	0.260	2.60	0.620	6.20			
	A9U90CH	CAU90C	4	90	1 ϕ 200	50	Cont.	90-1400	0.600	6.00	0.250	2.50	0.517	5.17	TP	CE	7.0
						60		90-1700	0.550	5.50			0.493	4.93			
					1 ϕ 220	60		90-1700	0.730	7.30	0.260	2.60	0.620	6.20			
	A9U90DH	CAU90D	4	90	1 ϕ 220	50	Cont.	90-1400	0.730	7.30	0.230	2.30	0.476	4.76	TP	CE	5.0
					1 ϕ 240				0.740	7.40			0.568	5.68			

- The capacitor condenser depends on the voltage in use. Be sure to use the correct capacity for the voltage.
- The use of an incorrect condenser capacity can cause malfunctions. To ensure that you order the correct model, check the voltage in use before ordering.
- All the motor types in the table above are CE Mark and thermal protected (TP) is built in the coil.

Gear head rating torque table

Gear head type: G9B□KH

Frequency	Reduction ratio		3	3.6	5	6	7.5	9	10	12.5	15	18	20	25
50Hz	Ouput speed	r/min	500	417	300	250	200	166	150	120	100	83	75	60
	Rating torque	N·m	1.78	2.15	2.98	3.58	4.47	5.36	5.96	6.70	8.05	9.66	10.78	12.15
		Kgf·cm	18.2	21.9	30.4	36.5	45.6	54.7	60.8	68.4	82.1	98.6	110.0	124.0
60Hz	Ouput speed	r/min	600	500	360	300	240	200	180	144	120	100	90	72
	Rating torque	N·m	1.43	1.72	2.38	2.86	3.58	4.68	4.76	5.37	6.44	7.72	8.59	9.70
		Kgf·cm	14.6	17.5	24.3	29.2	36.5	43.7	48.6	54.8	65.7	78.8	87.6	99.0

Gear head type: G9B□KH

Frequency	Reduction ratio		30	36	40	50	60	75	90	100	120	150	180	200
50Hz	Ouput speed	r/min	50	41	37	30	25	20	16	15	12	10	8	7.5
	Rating torque	N·m	14.60	17.44	19.40	19.60	19.60	19.60	19.60	19.60	19.60	19.60	19.60	19.60
		Kgf·cm	149.0	178.0	198.0	200.0	200.0	200.0	200.0	200.0	200.0	200.0	200.0	200.0
60Hz	Ouput speed	r/min	60	50	45	36	30	24	20	18	15	12	10	9
	Rating torque	N·m	11.66	14.01	15.48	19.40	19.60	19.60	19.60	19.60	19.60	19.60	19.60	19.60
		Kgf·cm	119.0	143.0	158.0	198.0	200.0	200.0	200.0	200.0	200.0	200.0	200.0	200.0

- !! in gear head type names indicates the reduction ratio.
- Intermediate gear heads are for use with gear heads having a reduction ratio of 30 or more. When an intermediate gear head is used, the rating torque is 1.96 N•m (20 kgf•cm) for a reduction ratio between 30 and 40, and 2.94 N•m (30 kgf•cm) for a reduction ratio of 50 or more.
- Rotation direction in shaded boxes are in the same direction as the motor rotation. Direction in unshaded boxes are in the opposite direction as the motor rotation.
- Rotation speed don't include motor slippage. The actual values will be between 2 and 20% lower, depending on the load.

Condenser

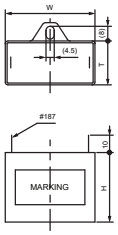

Motor type	Voltage	Capacity	Condenser type	W	T	H
	(V)	(μF)		(mm)	(mm)	(mm)
A9U90AH	1ph100	24.0	DMF-252406	58	36	39
	1ph110					

※Condensers are built in the controllers CAU90C and CAU90D

Dimensions

Gear motors

Motor type : A9 U90 □ H

Gear head type : G9B □ KH

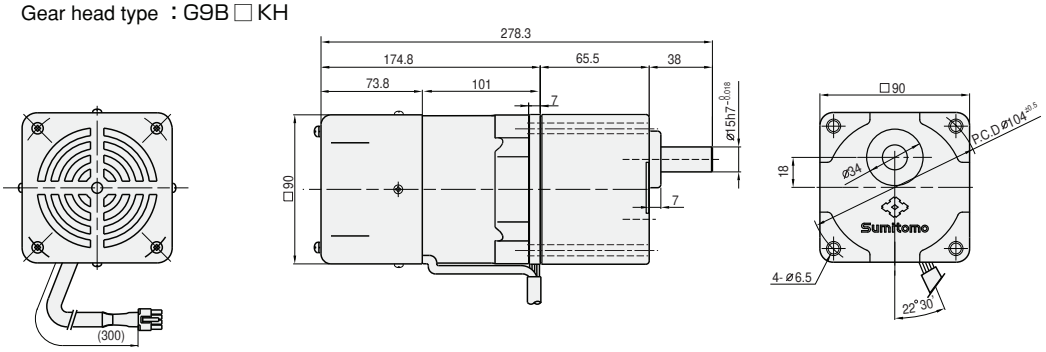

Gear head output shaft detail

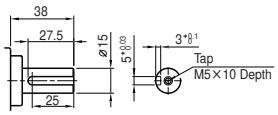

Key size

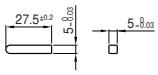

Table1. Weight

		Weight(kg)
Motor		3.53
Gear head	G9B3KH ~ G9B10KH	1.21
	G9B12.5KH ~ G9B20KH	1.30
	G9B25KH ~ G9B60KH	1.40
	G9B75KH ~ G9B200KH	1.45
Intermediate gear head		0.65

Motor

Motor type : A9 U90 □ H

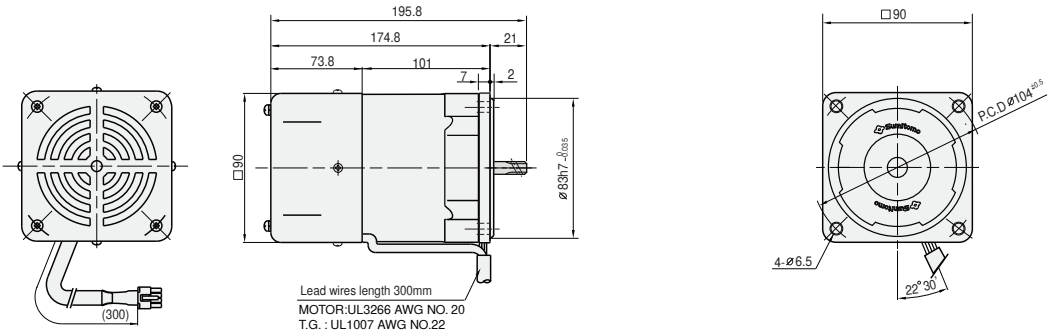

Intermediate gear head

Type: G9BXH10H

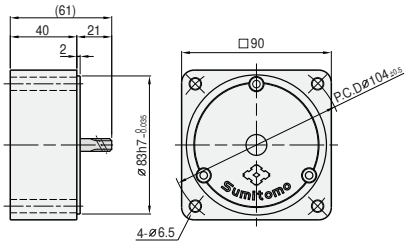

Related information

Selection procedure: p. 91

Options: Induction. p. 169

Standard specifications: p. 96

Technical information: p. 175

MEMO

BIBUS

BIBUS s.r.o.
+420 547 125 300
www.bibus.cz

Soket type speed controllers

A-motor

Overview
Induction
Reversible
Electromagnetic brakes
Terminal boxes
Speed controller (Overview)
Unit type
Socket type (Overview)
Speed controller (Induction)
Speed controller (Reversible)
Speed controller (Electro-magnetic brake)
Brake Packs
Options
Technical Information
Overview
6W
15W
25W
40W
60W
90W

Overview of Socket-type speed controllers (Standard Specifications)

Table 1. Socket-type speed controller standard specifications

Item		Socket type speed controller		
		CAH90A	CAH90C	CAH90D
Rating voltage		Single-phase AC100V	Single-phase AC200V	Single-phase AC220~240V
Voltage range		±10%		
Rating frequency		50/60Hz		50Hz
Rating electric current		3.0A		
※1 Applicable motor output	Induction	6W~90W		
	Reversible	6W~40W		
	W/Brake	6W~40W		
Speed range		50Hz : 90~1400r/min 60Hz : 90~1700r/min		90~1400r/min
Speed regulation		5% (Average)		
Speed setting instrument		It is possible to adjust it with External speed control switch		
Brake		It is possible to stop in a instant with electric brake.		
※2 Electric brake work time		0.5sec (Average)		
Parallel operation		Having the function		
Soft start & Soft stop function		Having the function (0.5sec~15sec/1200rpm)		
Insulation resistance		At least 100MΩ when measured with a 500V DC meager between case and pin at normal temperature and humidity after motor has reached rated torque.		
Insulation withstand voltage		Normal function when a 1500V, 50/60Hz current is applied between case and pin for 1 minute at normal temperature and humidity after the motor has reached rated torque.		

※1： Applicable motor is SOCKET TYPE SPEED CONTROL MOTORS produced by SHI
(Please use motor whose T.G voltage is 24V)
※2： Electric brake dosen't have stored torque.

Overview of Socket-type speed controllers (Standard Specifications)

Table 2. Socket-type speed control motor standard specifications

	Item	Induction motor	Reversible motor	Motor with electromagnetic brake
Motor		Single-phase motor		
	Capacity range	6W~90W 4poles	6W~40W 4poles	6W~40W 4poles
	Protection method Enclosure	6~40W: IP23 Totally enclosed non ventilated 60W~ : IP20 Totally enclosed fan cooled type	6~40W: IP23 Totally enclosed non ventilated	6~40W: IP23 Totally enclosed non ventilated
	Power source	100V 50/60Hz 200V 50/60Hz 220~240V 50Hz	100V 50/60Hz 200V 50/60Hz 220~240V 50Hz	100V 50/60Hz 200V 50/60Hz 220~240V 50Hz
	Insulation	CE Marking, Class E (120℃)	CE Marking, Class E 120℃	CE Marking, Class E 120℃
	Time rating	Continuous	Short-time (30 minutes)	Short-time (30 minutes)
	Starting method	Condenser running	Condenser running	Condenser running
	Lead wires	6~40W : Motor 3 wires UL Style 3266 20AWG, TG 2 wires UL Style 1007 22AWG 6~40W : Motor 3 wires UL Style 3266 20AWG, Fan 2 wires UL Style 3266 20AWG, TG 2 wires UL Style 1007 22AWG	6~40W : Motor 3 wires UL Style 3266 20AWG, TG 2 wires UL Style 1007 22AWG	6~40W : Motor 3 wires UL Style 3266 20AWG, Brake 2 wires UL Style 3266 20AWG, TG 2 wires UL Style 1007 22AWG
	Standards	CE marking (Low voltage direction)		
	Insulation resistance	At least 100MΩ when measured with a 500V DC meager between the motor coil and case at normal temperature and humidity after motor has reached rated torque.		
	Insulation withstand voltage	Normal function when a 1500V, 50/60Hz current is applied between the motor coil and case for 1 minute at normal temperature and humidity after the motor has reached rated torque.		
	Temperature rise	The temperature rise value (DT) should be no more than 90Åé when measured by the prescribed method after the motor has reached rated torque.		
	Overheating protector (TP)	Built in thermal protect (auto restore type) Release:120±5℃ Restore:77±5℃		
Gear	Lubrication method	Grease lubrication. Grease is loaded at shipment.		
Paint	Color	Astero silver		
Ambient conditions	Location	Indoors (Minimal dust and humidity)		
	Temperature	-10~40℃		
	Humidity	Under 85%		
	Elevation	Under 1,000m		
	Atmosphere	Well ventilated location, free of corrosive gases, explosive gases, vapors and dust.		

Overview
Induction
Reversible
Electromagnetic brakes
Terminal boxes
Speed controller (Overview)
Unit type
Socket type (Overview)
Speed controller (Induction)
Speed controller (Reversible)
Speed controller (Electro-magnetic brake)
Brake Packs
Options
Technical Information
Overview
6W
15W
25W
40W
60W
90W

Overview of socket-type speed control motors (Characteristics)

1. Characteristics of socket-type speed controllers

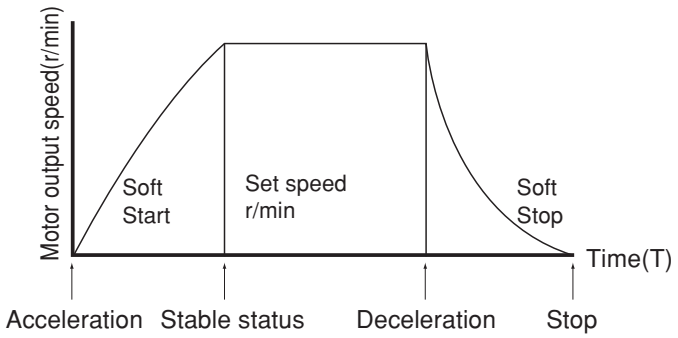

Socket-type speed controllers use an external speed volume to adjust and set the motor speed.
The motor can be stopped instantly using an electronic brake.
The compact 11-pin plug-in socket-type speed controller offers simple operation and installation.
Socket-type speed controllers have soft start and soft stop functions, enabling gradual operation without sudden starts and stops.
Time setting functions for soft start and soft stop are built-in, and the time settings can be adjusted easily.
Socket-type speed controllers enable parallel operation.*
*Parallel operation: A single speed control switch is used to operate multiple speed control packs simultaneously at the same speed setting.

2. Soft start, soft stop characteristics

Soft start gradually increases the speed up to the set speed. Soft stop gradually decreases the speed down to the set speed. Each time setting for these functions can be set using the variable resistors in the controller, in a range of about 0.5 to 15seconds (1,200 RPM). The soft stop function can't be used to stop the motor faster than a natural stop. If slow operation isn't needed, turn the dial on the inside all the way to the left (counterclockwise).

3. Instant stop characteristics

Socket-type speed controllers have an electronic brake function that enables the motor to be stopped in just 0.1 second.
A braking current operates for about 0.5 second, and then is automatically released. The electronic brake function doesn't store load torque. If stored torque is required (such as when stopping objects being moved up and down), use a control motor with an electromagnetic brake.

Note

- To operate the motor again after the instant stop operation, turn the braking switch in the operation direction. The motor starts in about 0.5 second. Don't perform the instant stop operation when the controller's speed control switch is set to 0, or the RUN/STOP switch is set to STOP.

- When increasing the speed on the speed control switch or setting the RUN/STOP switch to RUN, the motor may operate for about 1 revolution even if the RUN/BRAKE switch is set to BRAKE. If the power switch is used to repeat RUN/STOP operations less than 0.5 second apart, the motor may start operating instantly, so don't use the power switch in this manner.

Overview of socket-type speed control motors (Characteristics)

4. Cautions for use

1) Wiring cautions

•Use the sockets for wiring. Don't solder anything to the main unit's pins directly.
•When connecting sockets, check the terminal numbers.
•Before inserting the controller into the socket's groove, turn off the power and check the pin numbers.
•Equipment such as high-power motors, solenoids, high-frequency power supplies and electric welding equipment may cause the controller to malfunction. Use separate circuits for wiring the controller and main circuit cables of other equipment.
•Install a noise filter to prevent noise and malfunctions.
•Install the motor and controller as close together as possible, using short wiring.
•When another component requires a noise filter, configure the circuit as shown in the diagram below.

2) Operation cautions

•Don't let the motor's surface temperature exceed 90℃ during operation with an actual load. Repeated instant RUN/STOP operations make the motor temperature rise.
•Turn the power OFF when the motor is not in use for extended periods.
•Don't start or stop the motor by turning the AC power supply ON/OFF, as surge voltage from the switch may cause product damage.

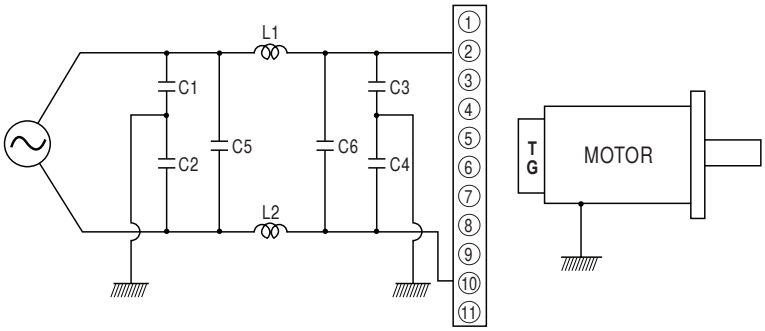

C1～C4 ： 1000pF(2000VDC)
C5～C6 ： 0.1 μF～0.2 μF(125VAC or 250VAC)
L1～L2 ： About 10 μH

Note
•L1 and L2 must not be magnetically saturated by the motor current.
•Install in the same location as the capacitor ground.
•Use short wiring, and thick ground wires.

Overview
Induction
Reversible
Electromagnetic brakes
Terminal boxes
Speed controller (Overview)
Unit type
Socket type (Overview)
Speed controller (Induction)
Speed controller (Reversible)
Speed controller (Electro-magnetic brake)
Brake Packs
Options
Technical Information
Overview
6W
15W
25W
40W
60W
90W

Overview of socket-type speed control motors (Troubleshooting)

5. Troubleshooting

Table 3. Troubleshooting

Problem	Check point	Problem location	Solution
Motor doesn't operate.	Disconnect the controller from the socket, connect socket terminals ④and⑪.	• If the motor operates, the speed controller or control unit	• Check the connection of the speed control variable resistor.
		• If the motor doesn't operate, the motor unit	• Check the motor connection. • Check the motor condenser connection.
	Disconnect the controller from the socket,disconnect socket terminals ⑧and⑨.	• If the motor operates, the speed controller	• Check the connection of the speed control variable resistor. • Check the RUN/STOP switch connection.
		• If the motor doesn't operate, the motor unit	• Check the motor connection.
Motor operates at maximum speed.	Disconnect the controller from the socket, and apply the AC power.	• If the motor operates, the speed controller or control unit	• Check the connection of the speed control variable resistor.
		• If the motor doesn't operate, the motor unit	• Check the motor connection.
	Disconnect the controller from the socket, connect socket terminals ⑧and⑨.	• If the motor stops, the speed controller	• Check the connection of the speed control variable resistor. • Check the RUN/STOP switch connection, and the connections of terminals ①and⑪.
		• If the motor doesn't operate, the control unit	
Can't change motor speed.	Set the speed control variable resistor to the maximum setting, then check the voltage of socket terminals ①and⑪.	• If the voltage is AC 20 V or more, the speed controller or control unit	• Check the connection of the speed control variable resistor.
		• If the voltage is less than AC 20 V, the tachogenerator unit	• Check the connections of terminals ①and⑪. • Check whether the resistance value of the tachogenerator alone is 1.5kΩ.
	Check the voltage between terminals ⑧and⑨ when the setting of the speed control variable resistor is varied.	• If the voltage can be varied between 0 and DC 6 V, the speed control unit	• Check the connection of the speed control variable resistor. • Check the RUN/STOP switch connection.
		• If the voltage can't be varied between 0 and DC 6 V, the control unit	• Check that the resistance of the speed control variable resistor varies between 0 and 2.0kΩ.
Motor doesn't stop right away.			• Check the external resistance connection(10Ω,10W). • Check the RUN/STOP switch connection.

Overview of socket-type speed controllers (Dimensions)

Socket-type speed controller dimensions

Controller

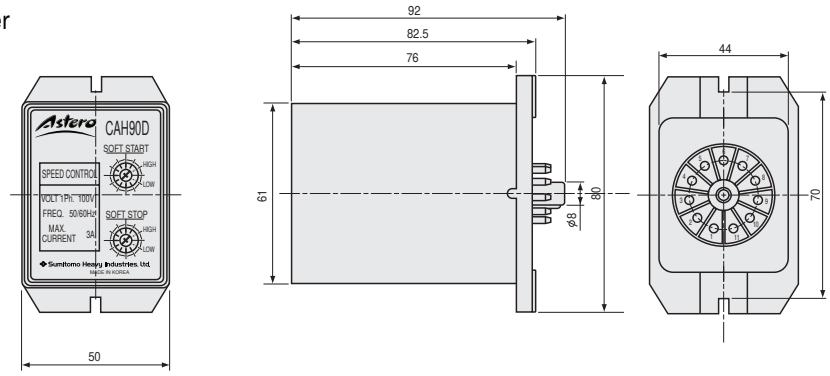

Socket (11pins)

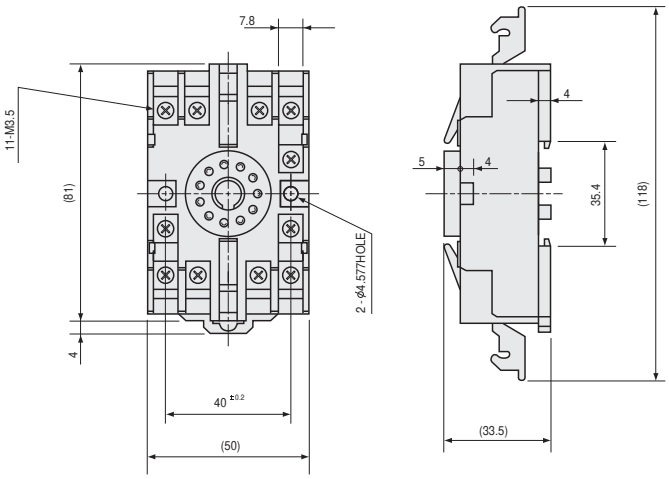

Overview
Induction
Reversible
Electromagnetic brakes
Terminal boxes
Speed controller (Overview)
Unit type
Socket type (Overview)
Speed controller (Induction)
Speed controller (Reversible)
Speed controller (Electro-magnetic brake)
Brake Packs
Options
Technical Information
Overview
6W
15W
25W
40W
60W
90W

Wiring diagram (Induction motors)

1-1. One-way running+Variable speed (6W ~ 40 W)

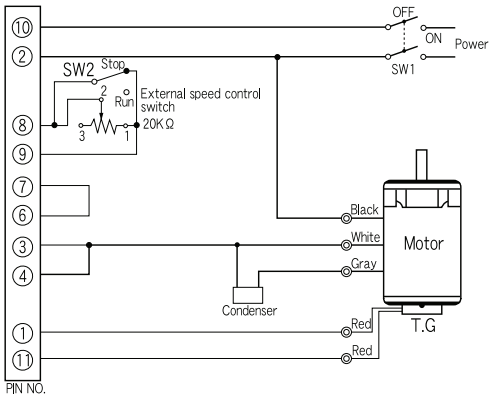

For single-phase 220 to 240 VAC/50 Hz motor connections, use the brown wire instead of the gray wire in the diagram.

SW1	AC125V or AC250V 5A or large
SW2	DC20V 10mA

Note: The motor operation direction is clockwise (CW) as seen from the shaft end.
For counterclockwise (CCW) operation, switch the white and gray motor lead wires.

Example of running operation

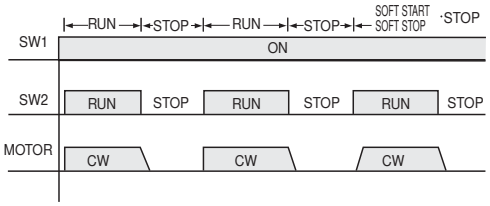

1-2. One-way running+Variable speed + Brake (6W～25W)

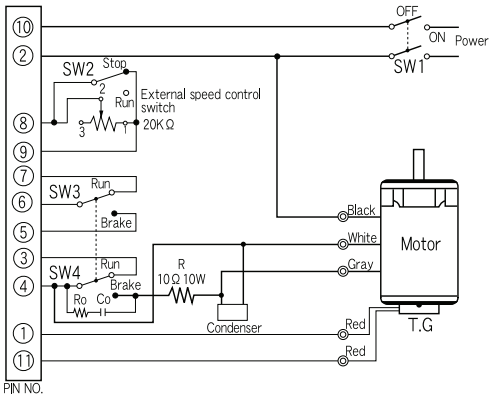

For single-phase 220 to 240 VAC/50 Hz motor connections, use the brown wire instead of the gray wire in the diagram.

SW1,4	AC125V or AC250V 5A以上
SW2,3	DC20V 10mA
Ro,Co	Ro=10～200Ω(1/4W以上) Co=0.1～0.2μF (AC125WV, AC250WV)
R:External resistance	10Ω, 10W以上

Note: The motor operation direction is clockwise (CW) as seen from the shaft end.
For counterclockwise (CCW) operation, switch the white and gray motor lead wires.

Example of running operation

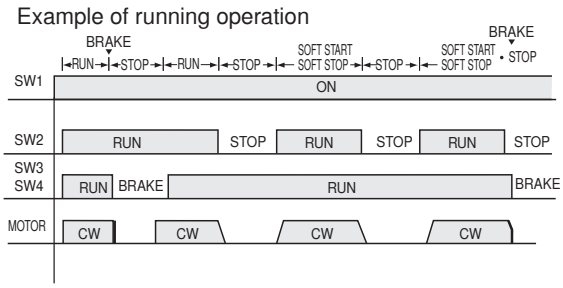

Wiring diagram (Induction motors)

1-3. One-way running+Variable speed + Brake (40W)

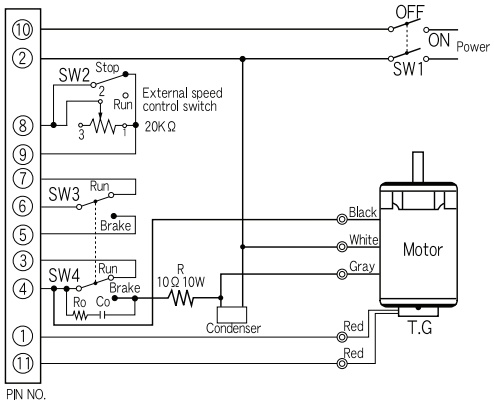

For single-phase 220 to 240 VAC/50 Hz motor connections, use the brown wire instead of the gray wire in the diagram.

SW1,4	AC125V or AC250V 5A以上
SW2,3	DC20V 10mA
Ro,Co	Ro=10～200Ω(1/4W以上) Co=0.1～0.2μF (AC125WV, AC250WV)
R:External resistance	10Ω, 10W or large

Note: The motor operation direction is clockwise (CW) as seen from the shaft end.
For counterclockwise (CCW) operation, switch the white and gray motor lead wires.

Example of running operation

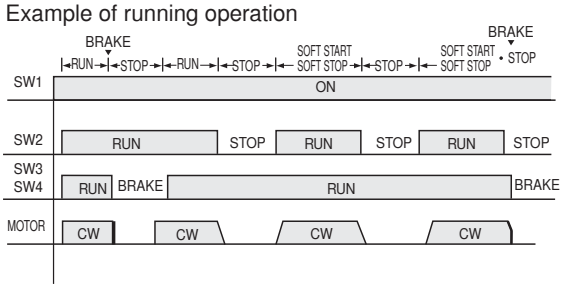

Functions

●Run/Stop function (1-1, 1-2, 1-3)
When SW2 in the wiring diagram is set to the RUN position, the motor operates at the speed set by the external speed controller.
When SW2 is set to the STOP position, the motor stops naturally after losing its inertia.

●Run/Brake function (1-2, 1-3)
When SW3 and SW4 are switched from the RUN to the BRAKE position with SW2 in the RUN position, the brake operates for about 0.5 second, stopping the motor instantly.

●Soft start/Soft stop functions (1-1, 1-2, 1-3)
- When the controller's SOFT START or SOFT STOP dial has been set, and SW2 is set to the RUN or STOP position, the motor gradually slows or speeds up for the set amount of time, to the speed set by the speed control switch.
- The soft stop and soft start functions change the motor speed in a straight-line manner for the set amount of time. The time can be set in a range of 0.5 to 15 seconds (1,200 r/min).
- The soft stop function can't be used to stop the motor faster than a natural stop.

Note: When not using the equipment for an extended period, turn SW1 off to prevent the controller from heating up.

Overview
Induction
Reversible
Electromagnetic brakes
Terminal boxes
Speed controller (Overview)
Unit type
Socket type (Overview)
Speed controller (Induction)
Speed controller (Reversible)
Speed controller (Electro-magnetic brake)
Brake Packs
Options
Technical Information
Overview
6W
15W
25W
40W
60W
90W

Wiring diagram (Reversible motors)

2-1 Both-way running+Variable speed(6W～40W)

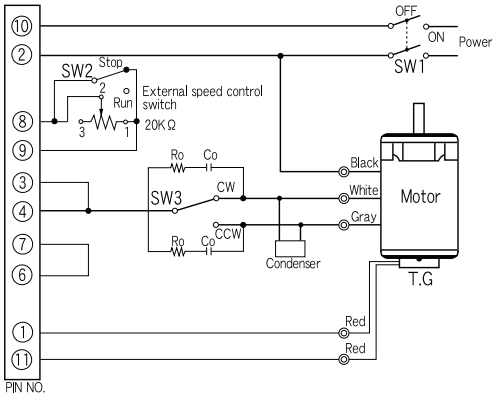

For single-phase 220 to 240 VAC/50 Hz motor connections, use the brown wire instead of the gray wire in the diagram.

SW1,3	AC125V or AC250V 5A or large
SW2	DC20V 10mA
Ro,Co	Ro=10～200Ω(1/4W or large) Co=0.1～0.2μF (AC125WV, AC250WV)

Note: The motor operation direction is clockwise (CW) as seen from the shaft end.
For counterclockwise (CCW) operation, switch the white and gray motor lead wires.

Example of running operation

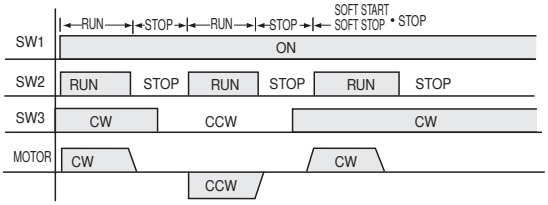

2-2 Both-way running+Variable speed + Brake(6W～25W)

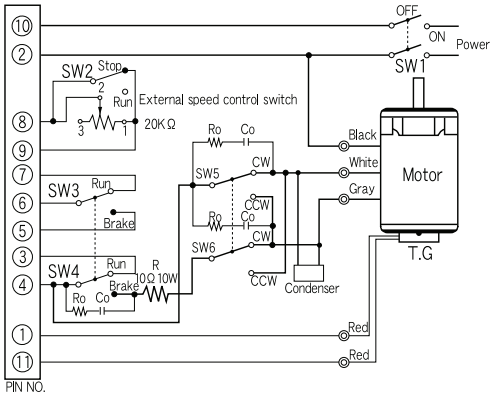

For single-phase 220 to 240 VAC/50 Hz motor connections, use the brown wire instead of the gray wire in the diagram.

SW1,4,5,6	AC125V or AC250V 5A or large
SW2,3	DC20V 10mA
Ro,Co	Ro=10～200Ω(1/4W or large) Co=0.1～0.2μF (AC125WV, AC250WV)
R:External resistance	10Ω, 10W or large

Note: The motor operation direction is clockwise (CW) as seen from the shaft end.
For counterclockwise (CCW) operation, switch the white and gray motor lead wires.

Example of running operation

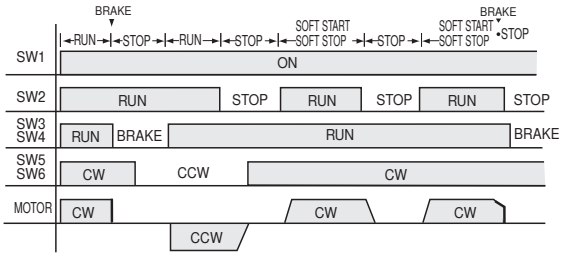

Wiring diagram (Reversible motors)

2-3 Both-way running+Variable speed + Brake(40W)

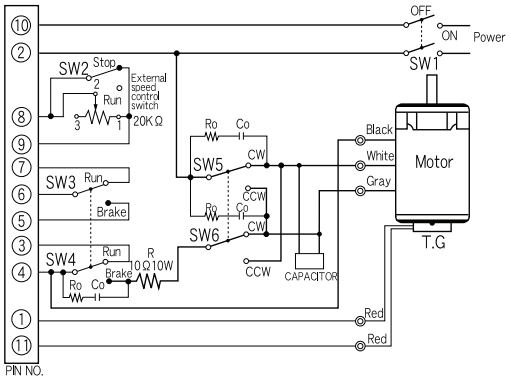

For single-phase 220 to 240 VAC/50 Hz motor connections, use the brown wire instead of the gray wire in the diagram.

SW1,4,5,6	AC125V or AC250V 5A以上
SW2,3	DC20V 10mA
Ro,Co	Ro=10～200Ω(1/4W以上) Co=0.1～0.2μF (AC125WV, AC250WV)
R:External resistance	10Ω, 10W以上

Note: The motor operation direction is clockwise (CW) as seen from the shaft end.
For counterclockwise (CCW) operation, switch the white and gray motor lead wires.

Example of running operation

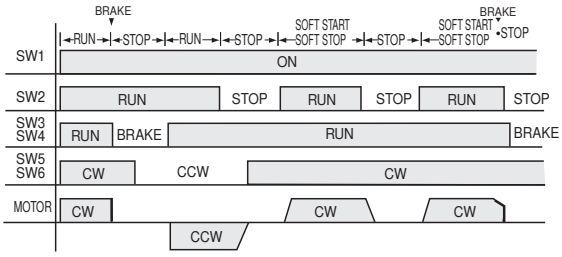

Functions

●Run/Stop function (2-1, 2-2, 2-3)
When SW2 in the wiring diagram is set to the RUN position, the motor operates at the speed set by the external speed controller.
When SW2 is set to the STOP position, the motor stops naturally after losing its inertia.

●Run/Brake function (2-2,2-3)
When SW3 and SW4 are switched from the RUN to the BRAKE position with SW2 in the RUN position, the brake operates for about 0.5 second, stopping the motor instantly.

●Soft Start/soft stop functions (2-1, 2-2,2-3)
・When the controller's SOFT START or SOFT STOP dial has been set, and SW2 is set to the RUN or STOP position, the motor gradually slows or speeds up for the set amount of time, to the speed set by the speed control switch.
・The soft stop and soft start functions change the motor speed in a straight-line manner for the set amount of time. The time can be set in a range of 0.5 to 15 seconds (1,200 r/min).
・The soft stop function can't be used to stop the motor faster than a natural stop.

Note: When not using the equipment for an extended period, turn SW1 off to prevent the controller from heating up.

Overview
Induction
Reversible
Electromagnetic brakes
Terminal boxes
Speed controller (Overview)
Unit type
Socket type (Overview)
Speed controller (Induction)
Speed controller (Reversible)
Speed controller (Electro-magnetic brake)
Brake Packs
Options
Technical Information
Overview
6W
15W
25W
40W
60W
90W

Wiring diagram (Motors with electromagnetic brakes)

3-1 Both-way running+Variable speed(6W～40W)

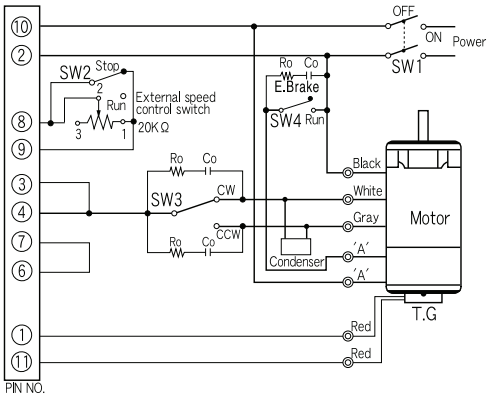

For single-phase 220 to 240 VAC/50 Hz motor connections, use the brown wire instead of the gray wire in the diagram.

SW1,3,4	AC125V or AC250V 5A or large
SW2	DC20V 10mA
Ro,Co	Ro=10～200Ω(1/4W or large) Co=0.1～0.2μF (AC125WV, AC250WV)

Voltage	Color of lead wire "A"
Single-phase 100～110 VAC	Blue
Single-phase 100～240 VAC	Orange

Example of running operation

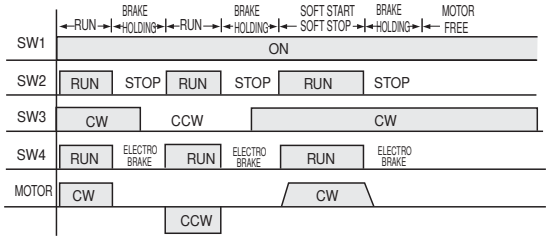

3-2 Both-way running+Variable speed + Brake(6W～25W)

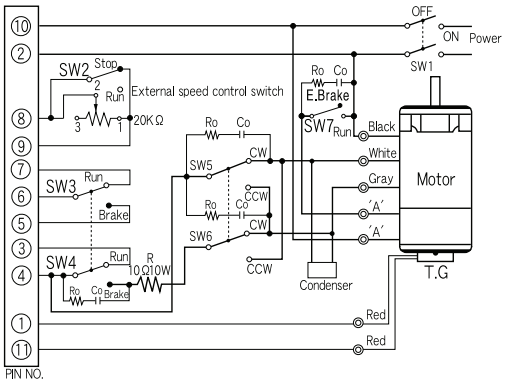

For single-phase 220 to 240 VAC/50 Hz motor connections, use the brown wire instead of the gray wire in the diagram.

SW1,4,5,6,7	AC125V or AC250V 5A or large
SW2,3	DC20V 10mA
Ro,Co	Ro=10～200Ω(1/4W or large) Co=0.1～0.2μF (AC125WV, AC250WV)
R: For braking External resistance	10Ω, 10W or large

Voltage	Color of lead wire "A"
Single-phase 100～110 VAC	Blue
Single-phase 100～240 VAC	Orange

Example of running operation

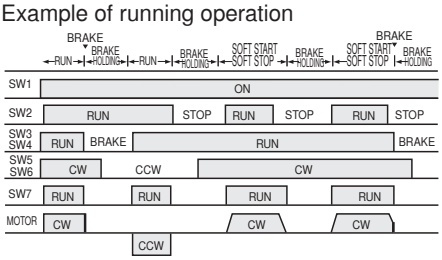

Electrical wiring diagram (Motors with electromagnetic brakes)

3-3 Both-way running+Variable speed + brake(40W)

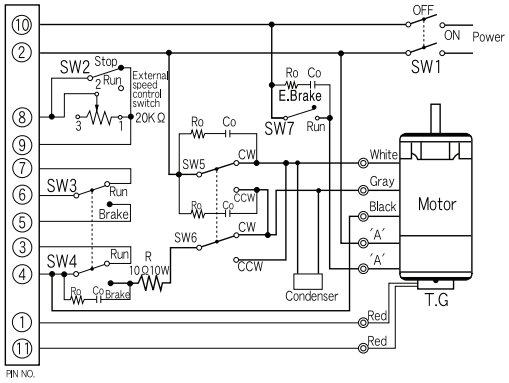

For single-phase 220 to 240 VAC/50 Hz motor connections, use the brown wire instead of the gray wire in the diagram.

SW1,4,5,6,7	AC125V or AC250V 5A or large
SW2,3	DC20V 10mA
Ro,Co	Ro=10～200Ω(1/4W or large) Co=0.1～0.2μF (AC125WV, AC250WV)
R:External resistance	10Ω, 10W or large

Voltage	Color of lead wire "A"
Single-phase 100～110 VAC	Blue
Single-phase 100～240 VAC	Orange

Example of running operation

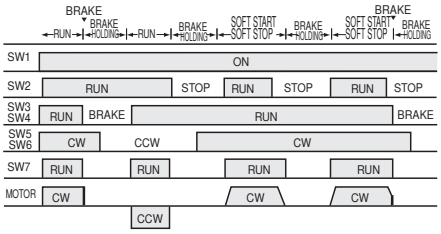

Functions

●Run/Stop function (3-1, 3-2, 3-3)
When SW2 in the wiring diagram is set to the RUN position, the motor operates at the speed set by the external speed controller.
When SW2 is set to the STOP position, the motor stops naturally after losing its inertia.

●Run/Brake function (3-2,3-3)
When SW3 and SW4 are switched from the RUN to the BRAKE position with SW2 in the RUN position, the brake operates for about 0.5 second, stopping the motor instantly.

●Soft Start/soft stop functions (3-1, 3-2,3-3)
・When the controller's SOFT START or SOFT STOP dial has been set, and SW2 is set to the RUN or STOP position, the motor gradually slows or speeds up for the set amount of time, to the speed set by the speed control switch.
・The soft stop and soft start functions change the motor speed in a straight-line manner for the set amount of time. The time can be set in a range of 0.5 to 15 seconds (1,200 r/min).
・The soft stop function can't be used to stop the motor faster than a natural stop.

Note: When not using the equipment for an extended period, turn SW1 off to prevent the controller from heating up.

Overview
Induction
Reversible
Electromagnetic brakes
Terminal boxes
Speed controller (Overview)
Unit type
Socket type (Overview)
Speed controller (Induction)
Speed controller (Reversible)
Speed controller (Electro-magnetic brake)
Brake Packs
Options
Technical Information
Overview
6W
15W
25W
40W
60W
90W

Wiring diagram

■Parallel operation

Parallel operation is possible, enabling multiple motors to be controlled to the same speed simultaneously using a single external speed control switch.

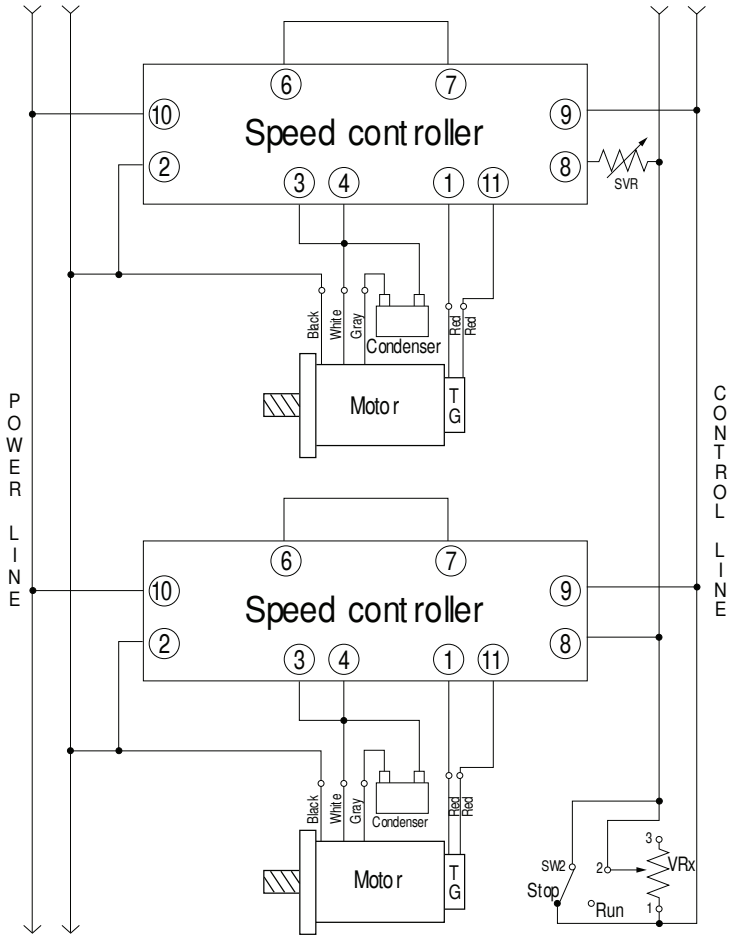

As shown in the wiring diagram on the left, the power unit (terminal Nos.②and⑩) and control unit (terminal Nos.⑧and⑨) should each be wired to the same wires.
Parallel operation is also possible with other motor and controller combinations if the power unit and control unit are wired in the same way.

Caution
・Wire power units and control units using the same numbers for each pin.
・The capacity of the speed control variable resistor is given by the formula below.
VRx = 20/N kΩ, N/4 W (N: number of motors)
Example: For 2 motors, the capacity is 10 kΩ, 1/2 W.

・Each motor will operate at almost the same speed, but load differences may sometimes create slight deviations.
To prevent this problem, connect a fine-tuning variable resistor (SVR) to terminal No.⑧.
Set the resistance value to between 5 and 10% of the value for the speed control variable resistor (VRx), with a capacity of 1/4 W.

For single-phase 220 to 240 VAC/50 Hz motor connections, use the brown wire instead of the gray wire in the diagram.

■Wiring for motors with fans (60 W, 90 W)

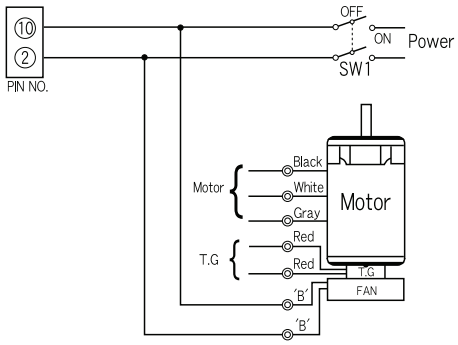

Voltage	Color of lead wire 'B'
Single-phase 100 to 110 VAC	Brown
Single-phase 200 to 240 VAC	Yellow

Note: For the connections of components other than the fan, see the relevant wiring diagrams.

Wiring diagram

■Operation panel

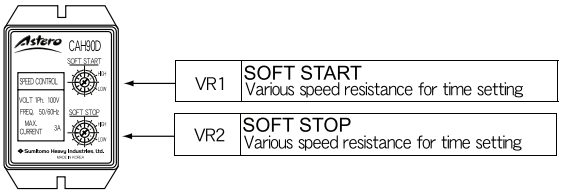

■Controlling the motor speed using an external DC voltage

To set the motor speed using an external DC voltage instead of an external speed control switch, connect the DC power supply and controller as shown below. (Be sure that the DC power supply output uses an AC input and is insulated, and the polarity doesn't change.)

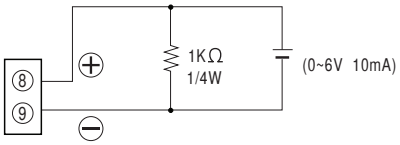

■Decreasing the starting time

When the set motor speed is low, a greater amount of time elapses from when the RUN/STOP switch is set to RUN, until the motor starts operating. If the amount of time the motor takes to start during low-speed operation is a problem, connect variable resistor VRT (used to adjust the starting time) as shown below.

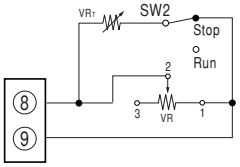

VRT	2KΩ 1/4W B type
SW2	DC20V 10mA

Caution
To stop the motor instantly, use the RUN/BRAKE switch and the circuit's RUN/STOP switch together. With the RUN/STOP switch in the STOP position, adjust the VRT until just before the motor starts.

■Switching the motor speed among multiple settings

If the motor speed must be adjusted to multiple settings, you can connect VR1, VR2 and VR3 and use SWA, SWB, SWC, (etc.) to switch the speed. The switching timing of the switches should be made roughly equal to the time for opening/closing the relay contact (SW4).

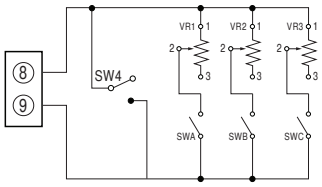

VR1,2,3	20kΩ 1/4W B type
SW1,2,3,4	DC20V 10mA

Caution
Socket-type controllers have one external control switch. Purchase Sumitomo's external speed control switch (EAVR20) separately if needed.

■Wiring diagram of unit

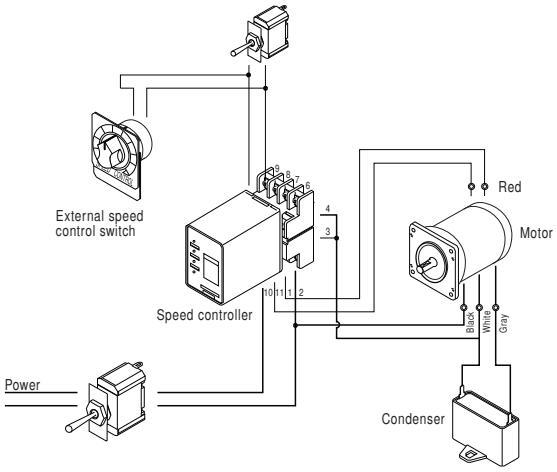

An external speed control switch can be used to adjust the motor speed continuously. When the switch is set to HIGH, the motor operates at high speed.
When set to LOW, the motor operates at low speed (or stops). The heavy line in the diagram above carries the motor's operation current.
The heavy unbroken lines in the diagram indicate wires with a cross-sectional area of about 0.75 mm². The thin lines indicate wires with a cross-sectional area of about 0.5 mm².
For single-phase 220 to 240 VAC/50 Hz motor connections, use the brown wire instead of the gray wire in the diagram.

MEMO

BIBUS

BIBUS s.r.o.
+420 547 125 300
www.bibus.cz

Socket-type speed control motors. Induction moters

∗Gear head and induction motor are sold separately.

Socket-type speed control motors Induction moters

- Product sets consisting of special induction motors, and socket-type speed controllers that can adjust the motor speed
- Speed controllers are compact and multifunctional.
- Controller, special motor and condenser must be wired externally.
- Speed range:
  50 Hz: 90 to 1,400 r/min
  60 Hz: 90 to 1,700 r/min
- Motors have built-in tachogenerators (TG).
- Motors can be stopped instantly using a built-in electronic brake function. (Optional external braking resistor must be attached.)
- Motor must be completely stopped before motor operation direction can be switched.
- Acceleration/deceleration time can be set, so motor can be accelerated/decelerated gradually (soft start, soft stop).
- Time rating: Continuous
- A single speed control switch can be used to operate multiple controllers simultaneously at the same speed setting.

Astero™

6W □60mm

Socket-type speed control motors

Induction motors

Motor specification table

Frame size mm sq	Motor Type	Controller Type	Poles	Output (W)	Voltage (V)	Frequency (Hz)	Time ratiang	Speed range (r/min)	Allowable torque At 1200r/min (N·m)	Allowable torque At 1200r/min (Kgf·cm)	Allowable torque At 90r/min (N·m)	Allowable torque At 90r/min (Kgf·cm)	Starting torque (N·m)	Starting torque (Kgf·cm)	Over-heating pro-tection	Standard	Condenser (μF)
60	A6HM06A	CAH90A	4	6	1ph100	50	Cont.	90-1400	0.045	0.45	0.030	0.30	0.032	0.32	ZP	CE	2.5
						60		90-1700	0.036	0.36	0.025	0.25	0.033	0.33			
					1ph110	60		90-1700	0.045	0.45			0.039	0.39			
	A6HM06C	CAH90C	4	6	1ph200	50	Cont.	90-1400	0.045	0.45	0.030	0.30	0.032	0.32	ZP	CE	0. 7
						60		90-1700	0.036	0.36	0.025	0.25	0.033	0.33			
					1ph220	60		90-1700	0.045	0.45			0.039	0.39			
	A6HM06D	CAH90D	4	6	1ph220	50	Cont.	90-1400	0.045	0.45	0.028	0.28	0.045	0.45	ZP	CE	0.7
					1ph240				0.056	0.56			0.049	0.49			

- The capacitor condenser depends on the voltage in use. Be sure to use the correct capacity for the voltage.
- The use of an incorrect condenser capacity can cause malfunctions. To ensure that you order the correct model, check the voltage in use before ordering.
- All the motor types in the table above are CE Mark and impedance-protected (ZP) types.

Gear head rating torque table

Gear head type: G6□D

Frequency	Reduction ratio		3	3.6	5	6	7.5	9	10	12.5	15	18	20	25
50Hz	Ouput speed	r/min	500	417	300	250	200	166	150	120	100	83	75	60
	Rating torque	N·m	0.13	0.15	0.21	0.26	0.31	0.38	0.42	0.53	0.63	0.76	0.76	0.95
		Kgf·cm	1.3	1.5	2.1	2.6	3.2	3.9	4.3	5.4	6.4	7.7	7.7	9.7
60Hz	Ouput speed	r/min	600	500	360	300	240	200	180	144	120	100	90	72
	Rating torque	N·m	0.10	0.13	0.17	0.21	0.26	0.30	0.34	0.43	0.51	0.62	0.62	0.76
		Kgf·cm	1.0	1.3	1.7	2.1	2.6	3.1	3.5	4.4	5.2	6.3	6.3	7.8

Gear head type: G6□D

Frequency	Reduction ratio		30	36	40	50	60	75	90	100	120	150	180	200
50Hz	Ouput speed	r/min	50	41	37	30	25	20	16	15	12	10	8	7.5
	Rating torque	N·m	1.14	1.36	1.52	1.72	2.06	2.57	2.94	2.94	2.94	2.94	2.94	2.94
		Kgf·cm	11.6	13.9	15.5	17.5	21.0	26.2	30.0	30.0	30.0	30.0	30.0	30.0
60Hz	Ouput speed	r/min	60	50	45	36	30	24	20	18	15	12	10	9
	Rating torque	N·m	0.92	1.11	1.24	1.39	1.67	2.09	2.50	2.78	2.94	2.94	2.94	2.94
		Kgf·cm	9.4	11.3	12.6	14.2	17.0	21.3	25.5	28.4	30.0	30.0	30.0	30.0

- □ in gear head type names indicates the reduction ratio.
- Intermediate gear heads are for use with gear heads having a reduction ratio of 30 or more. When an intermediate gear head is used, the rating torque is 1.96 N•m (20 kgf•cm) for a reduction ratio between 30 and 40, and 2.94 N•m (30 kgf•cm) for a reduction ratio of 50 or more.
- Rotation direction in shaded boxes are in the same direction as the motor rotation. Direction in unshaded boxes are in the opposite direction as the motor rotation.
- Rotation speed don't include motor slippage. The actual values will be between 2 and 20% lower, depending on the load.

Condenser

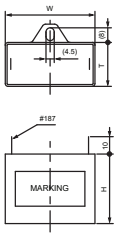

Motor type	Voltage (V)	Capacity (μF)	Condenser type	W (mm)	T (mm)	H (mm)
A6HM06A	1ph100	2.5	DMF-25255	36	16	25
	1ph110					
A6HM06C	1ph200	0.7	DMF-45704	36	16	25
	1ph220					
A6HM06D	1ph220	0.7	DMF-45704	36	16	25
	1ph240					

Dimensions

Gear motors

Motor type : A6HM06□

Gear head type : G6□D

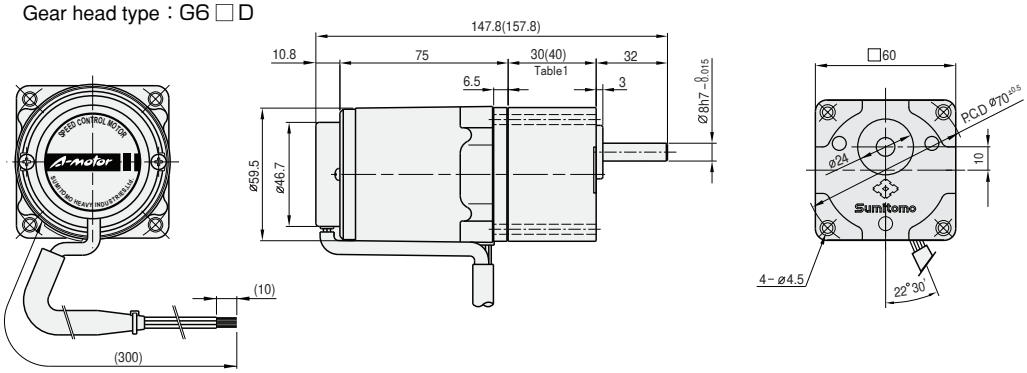

Gear head output shaft detail

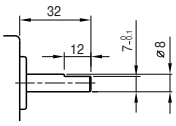

Table1. Gear head length

Gear head size	Length(mm)
G63D～G618D	30
G620D～G6200D	40

Table2. Weight

		Weight(kg)
Motor		0.76
Gear head	G63D ～ G618D	0.24
	G620D ～ G640D	0.30
	G650D ～ G6200D	0.33
Intermediate gear head		0.18

Motor

Type : A6HM06□

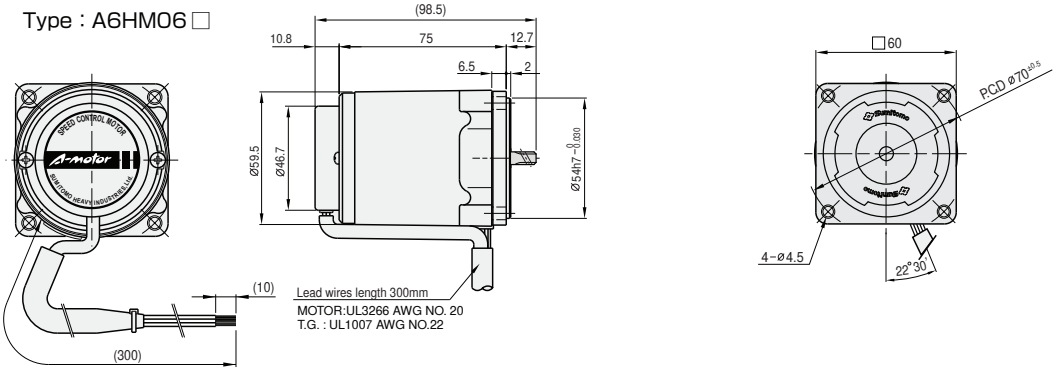

Intermediate gear head

Type: G6XH10

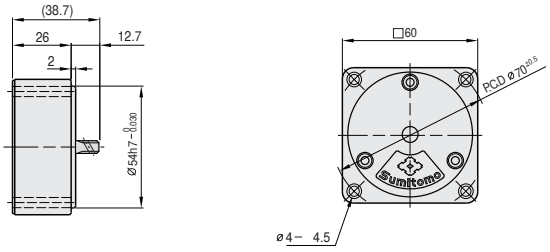

Related information

Selection procedure: p. 91

Options: Induction. p. 169

Standard specifications: p. 115

Technical information: p. 175

15W □70mm

Socket-type speed control motors

Induction motors

Motor specification table

Frame size mm sq	Motor Type	Controller Type	Poles	Output	Voltage	Frequency	Time ratiang	Speed range	Allowable torque At 1200r/min		Allowable torque At 90r/min		Starting torque		Over-heating pro-tection	Standard	Condenser
				(W)	(V)	(Hz)		(r/min)	(N·m)	(Kgf·cm)	(N·m)	(Kgf·cm)	(N·m)	(Kgf·cm)			(μF)
70	A7HM15A	CAH90A	4	15	1ph100	50	Cont.	90-1400	0.100	1.00	0.030	0.30	0.062	0.62	TP	CE	5.0
						60		90-1700	0.075	0.75			0.055	0.55			
					1ph110	60		90-1700	0.085	0.85			0.066	0.66			
	A7HM15C	CAH90C	4	15	1ph200	50	Cont.	90-1400	0.100	1.00	0.030	0.30	0.062	0.62	TP	CE	1.2
						60		90-1700	0.075	0.75			0.055	0.55			
					1ph220	60		90-1700	0.085	0.85			0.066	0.66			
	A7HM15D	CAH90D	4	15	1ph220	50	Cont.	90-1400	0.090	0.90	0.035	0.35	0.065	0.65	TP	CE	0.9
					1ph240				0.110	1.10			0.078	0.78			

- The capacitor condenser depends on the voltage in use. Be sure to use the correct capacity for the voltage.
- The use of an incorrect condenser capacity can cause malfunctions. To ensure that you order the correct model, check the voltage in use before ordering.
- All the motor types in the table above are CE Mark and thermal protected (TP) is built in the coil.

Gear head rating torque table

Gear head type: G7□K

Frequency	Reduction ratio		3	3.6	5	6	7.5	9	10	12.5	15	18	20	25
50Hz	Ouput speed	r/min	500	417	300	250	200	166	150	120	100	83	75	60
	Rating torque	N·m	0.31	0.38	0.53	0.64	0.79	0.95	1.06	1.32	1.59	1.90	1.90	2.37
		Kgf·cm	3.2	3.9	5.4	6.5	8.1	9.7	10.8	13.5	16.2	19.4	19.4	24.2
60Hz	Ouput speed	r/min	600	500	360	300	240	200	180	144	120	100	90	72
	Rating torque	N·m	0.29	0.35	0.50	0.60	0.75	0.89	0.99	1.25	1.49	1.79	1.79	2.24
		Kgf·cm	3.0	3.6	5.1	6.1	7.6	9.1	10.1	12.7	15.2	18.2	18.2	22.8

Gear head type: G7□K

Frequency	Reduction ratio		30	36	40	50	60	75	90	100	120	150	180	200
50Hz	Ouput speed	r/min	50	41	37	30	25	20	16	15	12	10	8	7.5
	Rating torque	N·m	2.85	3.42	3.81	4.28	4.90	4.90	4.90	4.90	4.90	4.90	4.90	4.90
		Kgf·cm	29.1	34.9	38.8	43.6	50.0	50.0	50.0	50.0	50.0	50.0	50.0	50.0
60Hz	Ouput speed	r/min	60	50	45	36	30	24	20	18	15	12	10	9
	Rating torque	N·m	2.68	3.22	3.58	4.02	4.83	4.90	4.90	4.90	4.90	4.90	4.90	4.90
		Kgf·cm	27.3	32.8	36.5	41.0	49.2	50.0	50.0	50.0	50.0	50.0	50.0	50.0

- □ in gear head type names indicates the reduction ratio.
- Intermediate gear heads are for use with gear heads having a reduction ratio of 25 or more. When an intermediate gear head is used, the rating torque is 3.92 N•m (40 kgf•cm) for a reduction ratio between 25 and 40, and 4.90 N•m (50 kgf•cm) for a reduction ratio of 50 or more.
- Rotation direction in shaded boxes are in the same direction as the motor rotation. Direction in unshaded boxes are in the opposite direction as the motor rotation.
- Rotation speed don't include motor slippage. The actual values will be between 2 and 20% lower, depending on the load.

Condenser

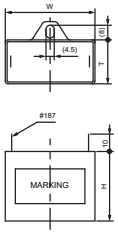

Motor type	Voltage	Capacity	Condenser type	W	T	H
	(V)	(μF)		(mm)	(mm)	(mm)
A7HM15A	1φ100	5.0	DMF-25505	38	19	29
	1φ110					
A7HM15C	1φ200	1.2	DMF-45125	36	16	25
	1φ220					
A7HM15D	1φ220	0.9	DMF-45904	36	16	25
	1φ240					

Dimensions

Gear motors

Motor type : A7HM15□

Gear head type : G7□K

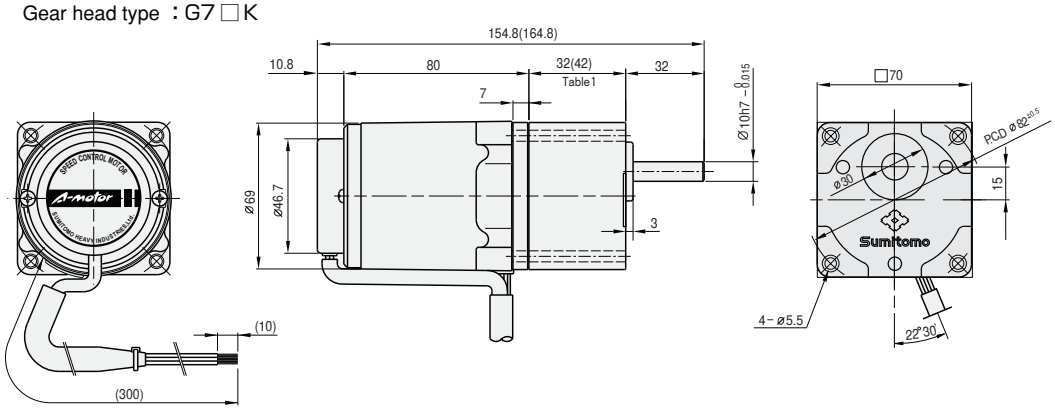

Gear head output shaft detail

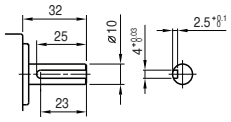

Key size

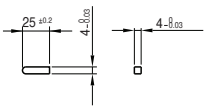

Table1. Gear head length

Gear head size	Length(mm)
G73K～G718K	32
G720K～G7200K	42

Table2. Weight

		Weight(kg)
Motor		1.12
Gear head	G73K ～ G718K	0.38
	G720K ～ G740K	0.47
	G750K ～ G7200K	0.52
Intermediate gear head		0.32

Motor

Type : A7HM15□

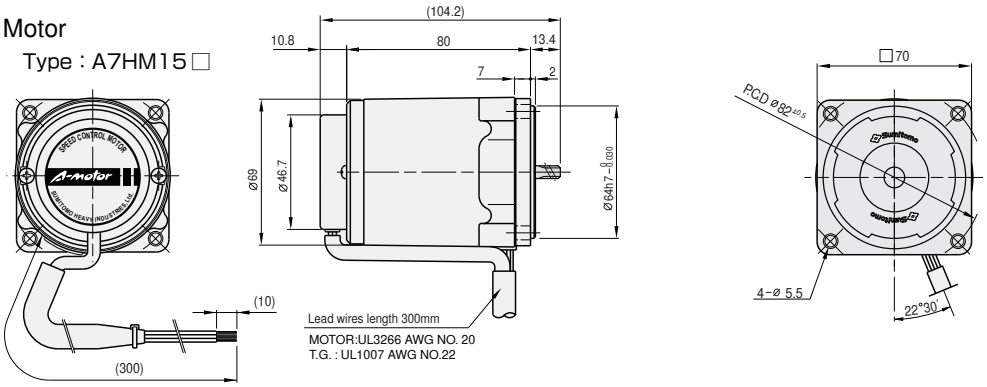

Intermediate gear head

Type: G7XH10

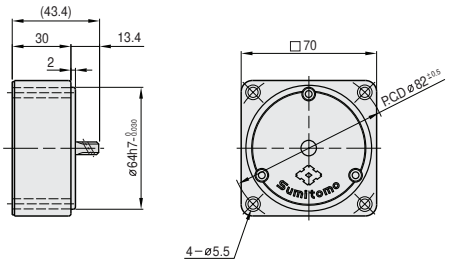

Related information

Selection procedure: p. 91

Options: Induction. p. 169

Standard specifications: p. 115

Technical information: p. 175

25W □80mm

Socket-type speed control motors

Induction motors

Motor specification table

Frame size mm sq	Motor Type	Controller Type	Poles	Output	Voltage	Frequency	Time ratiang	Speed range	Allowable torque At 1200r/min		Allowable torque At 90r/min		Starting torque		Over-heating pro-tection	Standard	Condenser
				(W)	(V)	(Hz)		(r/min)	(N·m)	(Kgf·cm)	(N·m)	(Kgf·cm)	(N·m)	(Kgf·cm)			(μF)
80	A8HM25A	CAH90A	4	25	1ph100	50	連続	90-1400	0.170	1.70	0.050	0.50	0.085	0.85	TP	CE	6.0
						60		90-1700	0.140	1.40			0.075	0.75			
					1ph110	60		90-1700	0.170	1.70			0.093	0.93			
	A8HM25C	CAH90C	4	25	1ph200	50	連続	90-1400	0.170	1.70	0.050	0.50	0.085	0.85	TP	CE	1.5
						60		90-1700	0.140	1.40			0.075	0.75			
					1ph220	60		90-1700	0.170	1.70			0.093	0.93			
	A8HM25D	CAH90D	4	25	1ph220	50	連続	90-1400	0.170	1.70	0.050	0.50	0.100	1.00	TP	CE	1.5
					1ph240				0.200	2.00			0.130	1.30			

- The capacitor condenser depends on the voltage in use. Be sure to use the correct capacity for the voltage.
- The use of an incorrect condenser capacity can cause malfunctions. To ensure that you order the correct model, check the voltage in use before ordering.
- All the motor types in the table above are CE Mark and thermal protected (TP) is built in the coil.

Gear head rating torque table

Gear head type: G8□K

Frequency	Reduction ratio		3	3.6	5	6	7.5	9	10	12.5	15	18	20	25
50Hz	Ouput speed	r/min	500	417	300	250	200	166	150	120	100	83	75	60
	Rating torque	N·m	0.52	0.63	0.87	1.05	1.31	1.57	1.74	2.19	2.62	3.15	3.15	3.94
		Kgf·cm	5.3	6.4	8.9	10.7	13.4	16.0	17.8	22.3	26.7	32.1	32.1	40.2
60Hz	Ouput speed	r/min	600	500	360	300	240	200	180	144	120	100	90	72
	Rating torque	N·m	0.43	0.51	0.72	0.85	1.07	1.28	1.43	1.78	2.15	2.57	2.58	3.22
		Kgf·cm	4.4	5.2	7.3	8.7	10.9	13.1	14.6	18.2	21.9	26.3	32.9	

Gear head type: G8□K

Frequency	Reduction ratio		30	36	40	50	60	75	90	100	120	150	180	200
50Hz	Ouput speed	r/min	50	41	37	30	25	20	16	15	12	10	8	7.5
	Rating torque	N·m	4.72	5.66	6.29	7.12	7.84	7.84	7.84	7.84	7.84	7.84	7.84	7.84
		Kgf·cm	48.2	57.8	64.2	72.6	80.0	80.0	80.0	80.0	80.0	80.0	80.0	80.0
60Hz	Ouput speed	r/min	60	50	45	36	30	24	20	18	15	12	10	9
	Rating torque	N·m	3.86	4.64	5.16	5.82	6.99	7.84	7.84	7.84	7.84	7.84	7.84	7.84
		Kgf·cm	39.4	47.3	52.6	59.4	71.3	80.0	80.0	80.0	80.0	80.0	80.0	80.0

- □ in gear head type names indicates the reduction ratio.
- Intermediate gear heads are for use with gear heads having a reduction ratio of 25 or more. When an intermediate gear head is used, the rating torque is 5.88 N•m (60 kgf•cm) for a reduction ratio between 25 and 40, and 7.84 N•m (80 kgf•cm) for a reduction ratio of 50 or more.
- Rotation direction in shaded boxes are in the same direction as the motor rotation. Direction in unshaded boxes are in the opposite direction as the motor rotation.
- Rotation speed don't include motor slippage. The actual values will be between 2 and 20% lower, depending on the load.

Condenser

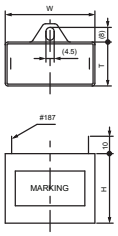

Motor type	Voltage	Capacity	Condenser type	W	T	H
	(V)	(μF)		(mm)	(mm)	(mm)
A8HM25A	1ph100 1ph110	6.0	DMF-25605	38	19	29
A8HM25C	1ph200 1ph220	1.5	DMF-45155	36	16	25
A8HM25D	1ph220 1ph240	1.5	DMF-45155	36	16	25

Dimensions

Gear motors

Motor type : A8HM25□

Gear head type : G8□K

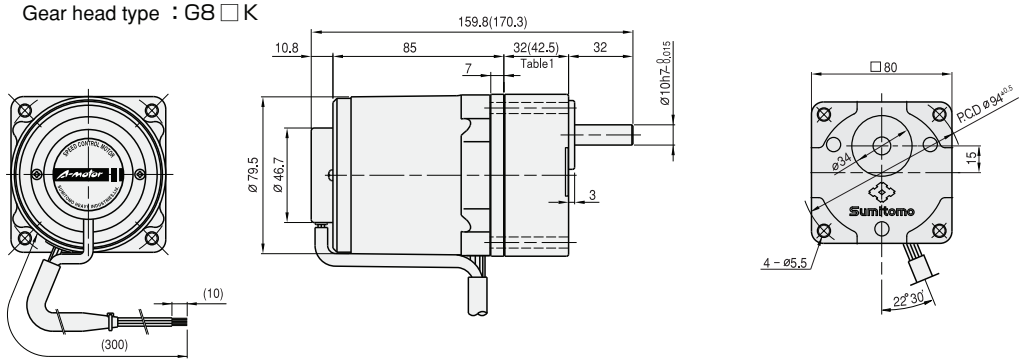

Gear head output shaft detail

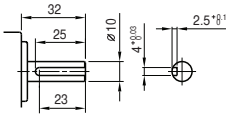

Key size

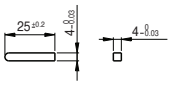

Table1. Gear head length

Gear head size	Length (mm)
G83K ～G818K	32
G820K ～G8200K	42.5

Table2. Weight

		Weight(kg)
Motor		1.60
Gear head	G83K ～ G818K	0.43
	G820K ～ G840K	0.57
	G850K ～ G8200K	0.61
Intermediate gear head		0.43

Motor

Type : A8HM25□

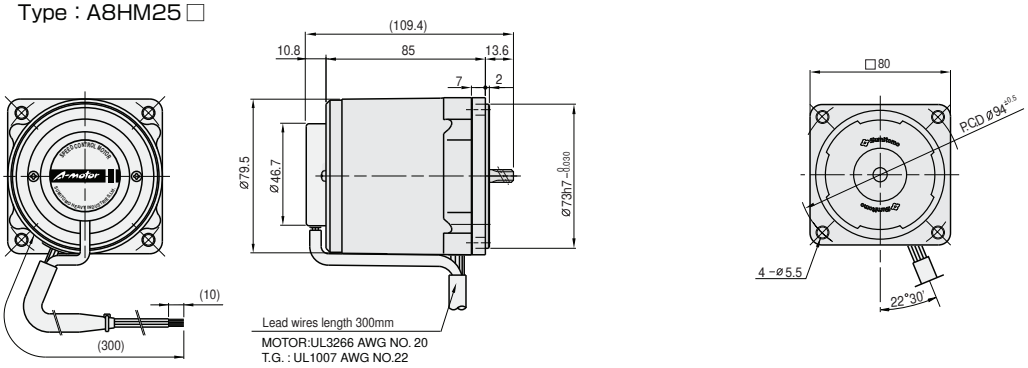

Intermediate gear head

Type: G8XH10

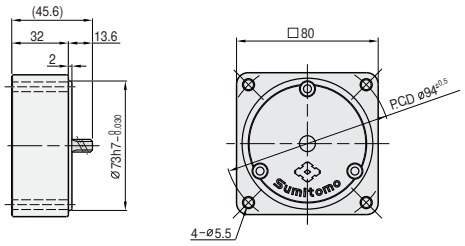

Related information

Selection procedure: p. 91

Options: Induction. p. 169

Standard specifications: p. 115

Technical information: p. 175

40W □90mm

Socket-type speed control motors

Induction motors

Motor specification table

Frame size mm sq	Motor Type	Controller Type	Poles	Output (W)	Voltage (V)	Frequency (Hz)	Time ratiang	Speed range (r/min)	Allowable torque At 1200r/min (N·m)	Allowable torque At 1200r/min (Kgf·cm)	Allowable torque At 90r/min (N·m)	Allowable torque At 90r/min (Kgf·cm)	Starting torque (N·m)	Starting torque (Kgf·cm)	Over-heating pro-tection	Standard	Condenser (μF)
90	A9HM40A	CAH90A	4	40	1ph100	50	Cont.	90-1400	0.280	2.80	0.055	0.55	0.173	1.73	TP	CE	10.0
						60		90-1700	0.240	2.40			0.145	1.45			
					1ph110	60		90-1700	0.300	3.00	0.063	0.63	0.177	1.77			
	A9HM40C	CAH90C	4	40	1ph200	50	Cont.	90-1400	0.280	2.80	0.055	0.55	0.173	1.73	TP	CE	2.5
						60		90-1700	0.240	2.40			0.145	1.45			
					1ph220	60		90-1700	0.300	3.00	0.063	0.63	0.177	1.77			
	A9HM40D	CAH90D	4	40	1ph220	50	Cont.	90-1400	0.270	2.70	0.063	0.63	0.158	1.58	TP	CE	2.0
					1ph240				0.320	3.20			0.190	1.90			

- The capacitor condenser depends on the voltage in use. Be sure to use the correct capacity for the voltage.
- The use of an incorrect condenser capacity can cause malfunctions. To ensure that you order the correct model, check the voltage in use before ordering.
- All the motor types in the table above are CE Mark and thermal protected (TP) is built in the coil.

Gear head rating torque table

Gear head type: G9A□K

Frequency	Reduction ratio		3	3.6	5	6	7.5	9	10	12.5	15	18	20	25
50Hz	Ouput speed	r/min	500	417	300	250	200	166	150	120	100	83	75	60
	Rating torque	N·m	0.81	0.97	1.35	1.62	2.03	2.43	2.70	3.37	4.05	4.86	4.86	6.09
		Kgf·cm	8.3	9.9	13.8	16.5	20.7	24.8	27.5	34.4	41.3	49.6	49.6	62.1
60Hz	Ouput speed	r/min	600	500	360	300	240	200	180	144	120	100	90	72
	Rating torque	N·m	0.67	0.80	1.11	1.33	1.67	2.00	2.23	2.78	3.33	4.00	4.01	5.01
		Kgf·cm	6.8	8.2	11.3	13.6	17.0	20.4	22.7	28.4	34.0	40.8	40.9	51.1

Gear head type: G9A□K

Frequency	Reduction ratio		30	36	40	50	60	75	90	100	120	150	180	200
50Hz	Ouput speed	r/min	50	41	37	30	25	20	16	15	12	10	8	7.5
	Rating torque	N·m	7.30	8.76	9.73	9.80	9.80	9.80	9.80	9.80	9.80	9.80	9.80	9.80
		Kgf·cm	74.5	89.4	99.3	100.0	100.0	100.0	100.0	100.0	100.0	100.0	100.0	100.0
60Hz	Ouput speed	r/min	60	50	45	36	30	24	20	18	15	12	10	9
	Rating torque	N·m	6.01	7.21	8.02	9.80	9.80	9.80	9.80	9.80	9.80	9.80	9.80	9.80
		Kgf·cm	61.3	73.6	81.8	100.0	100.0	100.0	100.0	100.0	100.0	100.0	100.0	100.0

- □ in gear head type names indicates the reduction ratio.
- When an intermediate gear head is used, the rating torque is 9.80N · m(100kgf · cm).
- Rotation direction in shaded boxes are in the same direction as the motor rotation. Direction in unshaded boxes are in the opposite direction as the motor rotation.
- Rotation speed don't include motor slippage. The actual values will be between 2 and 20% lower, depending on the load.

Condenser

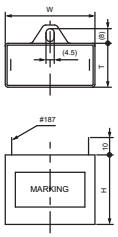

Motor type	Voltage (V)	Capacity (μF)	Condenser type	W (mm)	T (mm)	H (mm)
A9HM40A	1φ100	10.0	DMF-251006	47	19	28
	1φ110					
A9HM40C	1φ200	2.5	DMF-45255	47	19	28
	1φ220					
A9HM40D	1φ220	2.0	DMF-45205	38	19	29
	1φ240					

Dimensions

Gear motors

Motor type : A9HM40□

Gear head type : G9A□K

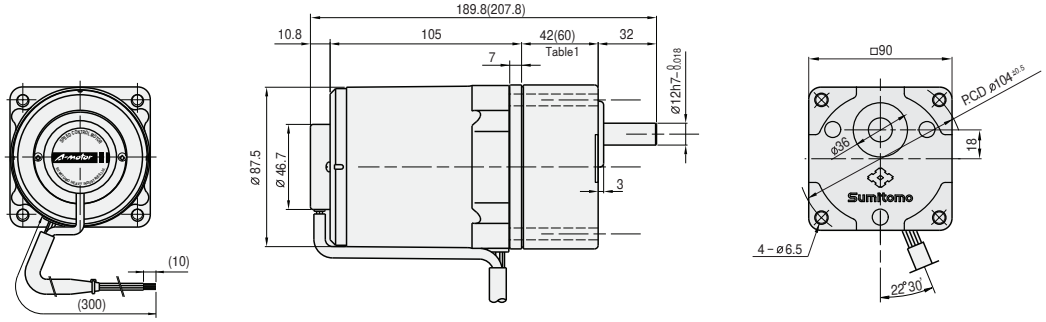

Gear head output shaft detail

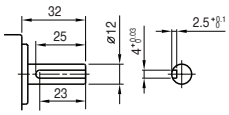

Key size

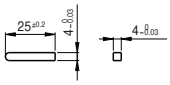

Table1. Gear head length

Gear head size	Length(mm)
G9A3K～G9A18K	42
G9A20K～G9A200K	60

Table2. Weight

		Weight(kg)
Motor		2.42
Gear head	G9A3K ～ G9A18K	0.73
	G9A20K ～ G9A40K	1.03
	G9A50K ～ G9A200K	1.13
Intermediate gear head		0.60

Motor

Type : A9HM40□

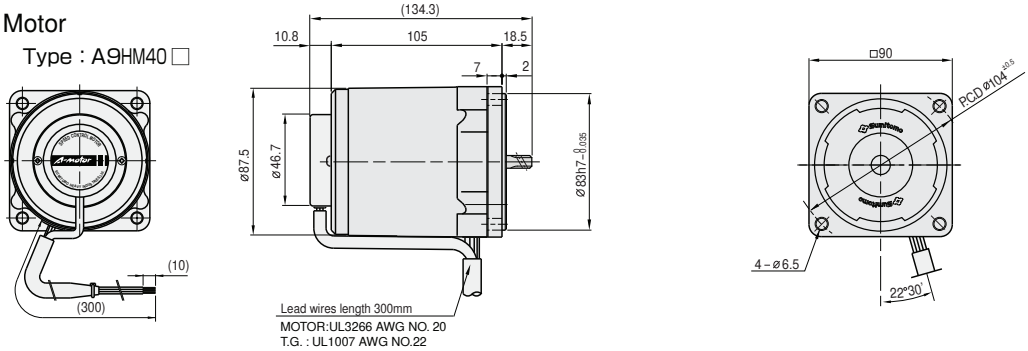

Intermediate gear head

Type: G9AXH10

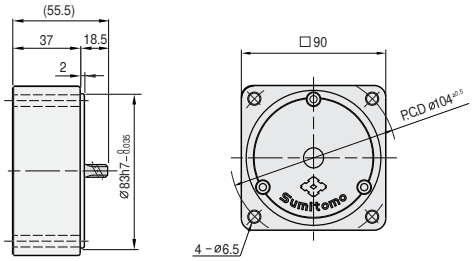

Related information

Selection procedure: p. 91

Options: Induction. p. 169

Standard specifications: p. 115

Technical information: p. 175

60W □90mm

Socket-type speed control motors

Induction motors

Motor specification table

Frame size mm sq	Motor Type	Controller Type	Poles	Output (W)	Voltage (V)	Frequency (Hz)	Time ratiang	Speed range (r/min)	Allowable torque At 1200r/min (N·m)	Allowable torque At 1200r/min (Kgf·cm)	Allowable torque At 90r/min (N·m)	Allowable torque At 90r/min (Kgf·cm)	Starting torque (N·m)	Starting torque (Kgf·cm)	Over-heating pro-tection	Standard	Condenser (μF)
90	A9HM60AH	CAH90A	4	60	1ph100	50	Cont.	90-1400	0.540	5.40	0.120	1.20	0.367	3.67	TP	CE	20. 0
						60		90-1700	0.440	4.40			0.318	3.18			
					1ph110	60		90-1700	0.530	5.30	0.160	1.60	0.385	3.85			
	A9HM60CH	CAH90C	4	60	1ph200	50	Cont.	90-1400	0.540	5.40	0.120	1.20	0.367	3.67	TP	CE	5.0
						60		90-1700	0.440	4.40			0.318	3.18			
					1ph220	60		90-1700	0.530	5.30	0.160	1.60	0.385	3.85			
	A9HM60DH	CAH90D	4	60	1ph220	50	Cont.	90-1400	0.440	4.40	0.090	0.90	0.266	2.66	TP	CE	3.5
					1ph240				0.530	5.30			0.331	3.31			

- The capacitor condenser depends on the voltage in use. Be sure to use the correct capacity for the voltage.
- The use of an incorrect condenser capacity can cause malfunctions. To ensure that you order the correct model, check the voltage in use before ordering.
- All the motor types in the table above are CE Mark and thermal protected (TP) is built in the coil.

Gear head rating torque table

Gear head type: G 9 B□K H

Frequency	Reduction ratio		3	3.6	5	6	7.5	9	10	12.5	15	18	20	25
50Hz	Ouput speed	r/min	500	417	300	250	200	166	150	120	100	83	75	60
	Rating torque	N·m	1.20	1.43	1.99	2.38	2.99	3.58	3.97	4.47	5.37	6.44	7.15	8.09
		Kgf·cm	12.2	14.6	20.3	24.3	30.4	36.5	40.5	45.6	54.8	65.7	73.0	82.5
60Hz	Ouput speed	r/min	600	500	360	300	240	200	180	144	120	100	90	72
	Rating torque	N·m	0.95	1.15	1.59	1.90	2.38	2.86	3.18	3.58	4.29	5.16	5.72	6.47
		Kgf·cm	9.7	11.7	16.2	19.4	24.3	29.2	32.4	36.5	43.8	52.6	58.4	66.0

Gear head type: G 9 B□K H

Frequency	Reduction ratio		30	36	40	50	60	75	90	100	120	150	180	200
50Hz	Ouput speed	r/min	50	41	37	30	25	20	16	15	12	10	8	7.5
	Rating torque	N·m	9.70	11.66	12.94	16.17	19.40	19.60	19.60	19.60	19.60	19.60	19.60	19.60
		Kgf·cm	99.0	119.0	132.0	165.0	198.0	200.0	200.0	200.0	200.0	200.0	200.0	200.0
60Hz	Ouput speed	r/min	60	50	45	36	30	24	20	18	15	12	10	9
	Rating torque	N·m	7.76	9.31	10.39	12.94	15.48	17.35	19.60	19.60	19.60	19.60	19.60	19.60
		Kgf·cm	79.2	95.0	106.0	132.0	158.0	177.0	200.0	200.0	200.0	200.0	200.0	200.0

- □ in gear head type names indicates the reduction ratio.
- When an intermediate gear head is used, the rating torgue is 19.60N · m(200kgf · cm).
- Rotation direction in shaded boxes are in the same direction as the motor rotation. Direction in unshaded boxes are in the opposite direction as the motor rotation.
- Rotation speed don't include motor slippage. The actual values will be between 2 and 20% lower, depending on the load.

Condenser

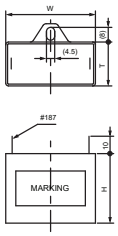

Motor type	Voltage (V)	Capacity (μF)	Condenser type	W (mm)	T (mm)	H (mm)
A9HM60AH	1ph100	20.0	DMF-252006	58	36	39
	1ph110					
A9HM60CH	1ph200	5.0	DMF-45505	50	25	40
	1ph220					
A9HM60DH	1ph220	3.5	DMF-45355	48	21	33
	1ph240					

Dimensions

Gear motors

Motor type : A9 HM60 □ H

Gear head type : G9B □ KH

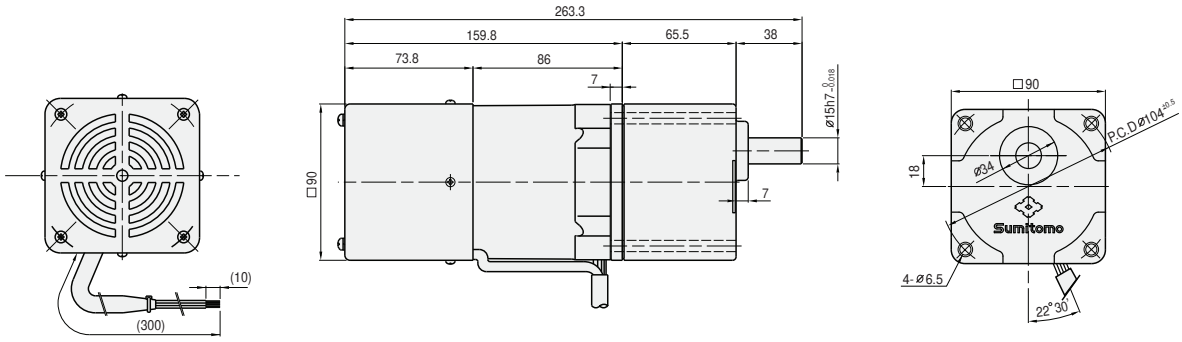

Gear head output shaft detail

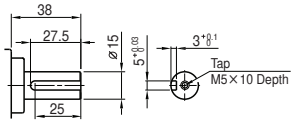

Key size

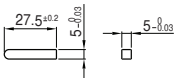

Table1. Weight

		Weight(kg)
Motor		2.93
Gear head	G9B3KH ~ G9B10KH	1.21
	G9B12.5KH ~ G9B20KH	1.30
	G9B25KH ~ G9B60KH	1.40
	G9B75KH ~ G9B200KH	1.45
Intermediate gear head		0.65

Motor

Type : A9 HM60 □ H

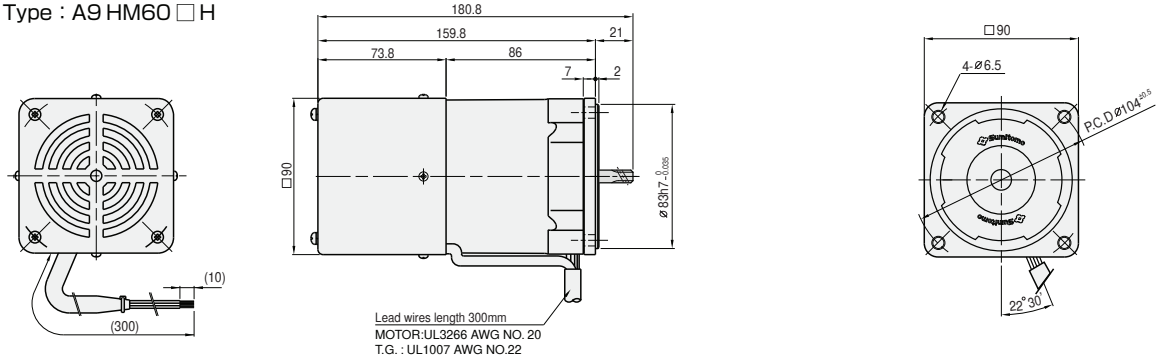

Intermediate gear head

Type: G9BXH10H

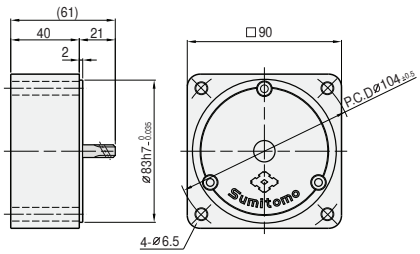

Related information

Selection procedure: p. 91

Options: Induction. p. 169

Standard specifications: p. 115

Technical information: p. 175

90W □90mm

Socket-type speed control motors

Induction motors

Motor specification table

Frame size mm sq	Motor Type	Controller Type	Poles	Output	Voltage	Frequency	Time ratiang	Speed range	Allowable torque At 1200r/min		Allowable torque At 90r/min		Starting torque		Over-heating pro-tection	Standard	Condenser
				(W)	(V)	(Hz)		(r/min)	(N·m)	(Kgf·cm)	(N·m)	(Kgf·cm)	(N·m)	(Kgf·cm)			(μF)
90	A9HM90AH	CAH90A	4	90	1ph100	50	Cont.	90-1400	0.720	7.20	0.150	1.50	0.431	4.31	TP	CE	24.0
						60		90-1700	0.540	5.40			0.371	3.71			
					1ph110	60		90-1700	0.520	5.20			0.438	4.38			
	A9HM90CH	CAH90C	4	90	1ph200	50	Cont.	90-1400	0.720	7.20	0.150	1.50	0.431	4.31	TP	CE	7.0
						60		90-1700	0.540	5.40			0.371	3.71			
					1ph220	60		90-1700	0.520	5.20			0.438	4.38			
	A9HM90DH	CAH90D	4	90	1ph220	50	Cont.	90-1400	0.650	6.50	0.180	1.80	0.395	3.95	TP	CE	5.0
					1ph240				0.820	8.20			0.489	4.89			

- The capacitor condenser depends on the voltage in use. Be sure to use the correct capacity for the voltage.
- The use of an incorrect condenser capacity can cause malfunctions. To ensure that you order the correct model, check the voltage in use before ordering.
- All the motor types in the table above are CE Mark and thermal protected (TP) is built in the coil.

Gear head rating torque table

Gear head type: G9B□KH

Frequency	Reduction ratio		3	3.6	5	6	7.5	9	10	12.5	15	18	20	25
50Hz	Ouput speed	r/min	500	417	300	250	200	166	150	120	100	83	75	60
	Rating torque	N·m	1.78	2.15	2.98	3.58	4.47	5.36	5.96	6.70	8.05	9.66	10.78	12.15
		Kgf·cm	18.2	21.9	30.4	36.5	45.6	54.7	60.8	68.4	82.1	98.6	110.0	124.0
60Hz	Ouput speed	r/min	600	500	360	300	240	200	180	144	120	100	90	72
	Rating torque	N·m	1.43	1.72	2.38	2.86	3.58	4.68	4.76	5.37	6.44	7.72	8.59	9.70
		Kgf·cm	14.6	17.5	24.3	29.2	36.5	43.7	48.6	54.8	65.7	78.8	87.6	99.0

Gear head type: G9B□KH

Frequency	Reduction ratio		30	36	40	50	60	75	90	100	120	150	180	200
50Hz	Ouput speed	r/min	50	41	37	30	25	20	16	15	12	10	8	7.5
	Rating torque	N·m	14.60	17.44	19.40	19.60	19.60	19.60	19.60	19.60	19.60	19.60	19.60	19.60
		Kgf·cm	149.0	178.0	198.0	200.0	200.0	200.0	200.0	200.0	200.0	200.0	200.0	200.0
60Hz	Ouput speed	r/min	60	50	45	36	30	24	20	18	15	12	10	9
	Rating torque	N·m	11.66	14.01	15.48	19.40	19.60	19.60	19.60	19.60	19.60	19.60	19.60	19.60
		Kgf·cm	119.0	143.0	158.0	198.0	200.0	200.0	200.0	200.0	200.0	200.0	200.0	200.0

- □ in gear head type names indicates the reduction ratio.
- When an intermediate gear head is used, the rating torgue is 19.60N · m(200kgf · cm).
- Rotation direction in shaded boxes are in the same direction as the motor rotation. Direction in unshaded boxes are in the opposite direction as the motor rotation.
- Rotation speed don't include motor slippage. The actual values will be between 2 and 20% lower, depending on the load.

Condenser

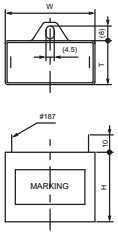

Motor type	Voltage	Capacity	Condenser type	W	T	H
	(V)	(μF)		(mm)	(mm)	(mm)
A9HM90AH	1ph100 1ph110	24.0	DMF-252406	58	36	39
A9HM90CH	1ph200 1ph220	7.0	DMF-45705	50	25	40
A9HM90DH	1ph220 1ph240	5.0	DMF-45505	50	25	40

Dimensions

Gear motors

Motor type : A9HM90□H

Gear head type : G9B□KH

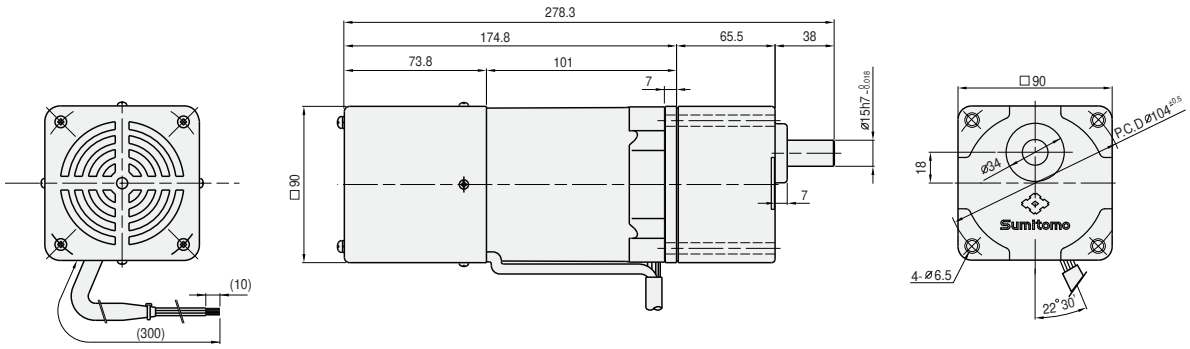

Gear head output shaft detail

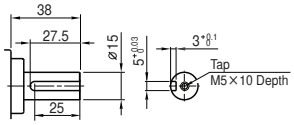

Key size

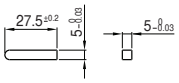

Table1. Weight

		Weight(kg)
Motor		3.53
Gear head	G9B3KH ~ G9B10KH	1.21
	G9B12.5KH ~ G9B20KH	1.30
	G9B25KH ~ G9B60KH	1.40
	G9B75KH ~ G9B200KH	1.45
Intermediate gear head		0.65

Motor

Type : A9HM90□H

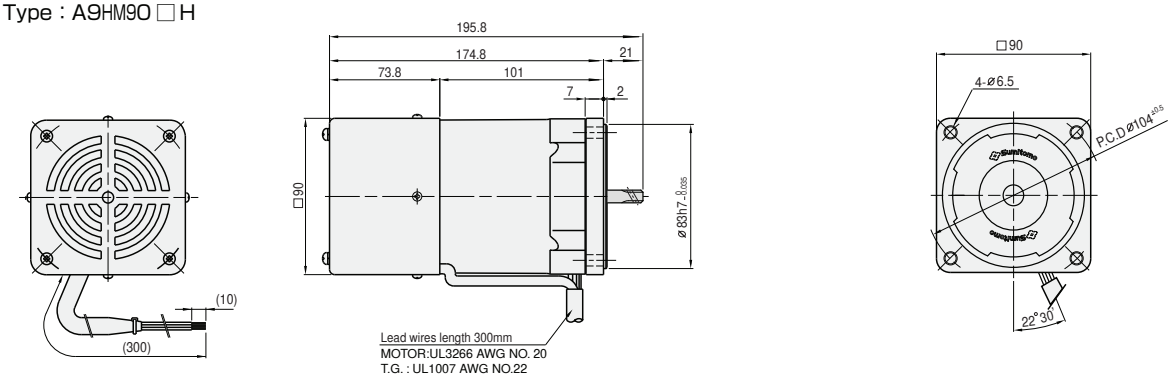

Intermediate gear head

Type: G9BXH10H

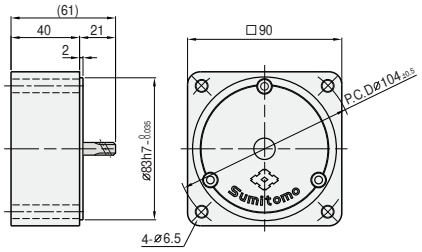

Related information

Selection procedure: p. 91

Options: Induction. p. 169

Standard specifications: p. 115

Technical information: p. 175

MEMO

BIBUS

BIBUS s.r.o.
+420 547 125 300
www.bibus.cz

Soket-type speed controllers (Reversible moters)

∗Gear head and reversible moter motor are sold separately.

Socket-type speed controllers Rebersible motors

- Product sets consisting of special induction motors, and socket-type speed controllers that can adjust the motor speed
- Speed controllers are compact and multifunctional.
- Controller, special motor and condenser must be wired externally.
- Speed range:
  50 Hz: 90 to 1,400 r/min
  60 Hz: 90 to 1,700 r/min
- Motors have built-in tachogenerators (TG).
- Motors can be stopped instantly using a built-in electronic brake function. (Optional external braking resistor must be attached.)
- Motor must be completely stopped before motor operation direction can be switched.
- Acceleration/deceleration time can be set, so motor can be accelerated/decelerated gradually (soft start, soft stop).
- Time rating: Short-time (30minutes)
- A single speed control switch can be used to operate multiple controllers simultaneously at the same speed setting.

Astero™

6W □60mm

Socket-type speed control motors

Reversible motors

Motor specification table

Frame size mm sq	Motor Type	Controller Type	Poles	Output (W)	Voltage (V)	Frequency (Hz)	Time ratiang	Speed range (r/min)	Allowable torque At 1200r/min (N·m)	(Kgf·cm)	Allowable torque At 90r/min (N·m)	(Kgf·cm)	Starting torque (N·m)	(Kgf·cm)	Over-heating pro-tection	Standard	Condenser (μF)
60	A6HR06A	CAH90A	4	6	1ph100	50	30Min.	90-1400	0.036	0.36	0.032	0.32	0.030	0.30	ZP	CE	3.0
						60		90-1700	0.028	0.28	0.025	0.25	0.023	0.23			
					1ph110	60		90-1700	0.036	0.36	0.032	0.32	0.026	0.26			
	A6HR06C	CAH90C	4	6	1ph200	50	30Min.	90-1400	0.036	0.36	0.032	0.32	0.030	0.30	ZP	CE	0. 8
						60		90-1700	0.028	0.28	0.025	0.25	0.023	0.23			
					1ph220	60		90-1700	0.036	0.36	0.032	0.32	0.026	0.26			
	A6HR06D	CAH90D	4	6	1ph220	50	30Min.	90-1400	0.030	0.30	0.030	0.30	0.028	0.28	ZP	CE	0.7
					1ph240				0.045	0.45	0.033	0.33	0.040	0.40			

- The capacitor condenser depends on the voltage in use. Be sure to use the correct capacity for the voltage.
- The use of an incorrect condenser capacity can cause malfunctions. To ensure that you order the correct model, check the voltage in use before ordering.
- All the motor types in the table above are CE Mark and impedance-protected (ZP) types.

Gear head rating torque table

Gear head type: G6□D

Frequency	Reduction ratio		3	3.6	5	6	7.5	9	10	12.5	15	18	20	25
50Hz	Ouput speed	r/min	500	417	300	250	200	166	150	120	100	83	75	60
	Rating torque	N·m	0.13	0.15	0.21	0.26	0.31	0.38	0.42	0.53	0.63	0.76	0.76	0.95
		Kgf·cm	1.3	1.5	2.1	2.6	3.2	3.9	4.3	5.4	6.4	7.7	7.7	9.7
60Hz	Ouput speed	r/min	600	500	360	300	240	200	180	144	120	100	90	72
	Rating torque	N·m	0.10	0.13	0.17	0.21	0.26	0.30	0.34	0.43	0.51	0.62	0.62	0.76
		Kgf·cm	1.0	1.3	1.7	2.1	2.6	3.1	3.5	4.4	5.2	6.3	6.3	7.8

Gear head type: G6□D

Frequency	Reduction ratio		30	36	40	50	60	75	90	100	120	150	180	200
50Hz	Ouput speed	r/min	50	41	37	30	25	20	16	15	12	10	8	7.5
	Rating torque	N·m	1.14	1.36	1.52	1.72	2.06	2.57	2.94	2.94	2.94	2.94	2.94	2.94
		Kgf·cm	11.6	13.9	15.5	17.5	21.0	26.2	30.0	30.0	30.0	30.0	30.0	30.0
60Hz	Ouput speed	r/min	60	50	45	36	30	24	20	18	15	12	10	9
	Rating torque	N·m	0.92	1.11	1.24	1.39	1.67	2.09	2.50	2.78	2.94	2.94	2.94	2.94
		Kgf·cm	9.4	11.3	12.6	14.2	17.0	21.3	25.5	28.4	30.0	30.0	30.0	30.0

- □ in gear head type names indicates the reduction ratio.
- Intermediate gear heads are for use with gear heads having a reduction ratio of 30 or more. When an intermediate gear head is used, the rating torque is 1.96 N•m (20 kgf•cm) for a reduction ratio between 30 and 40, and 2.94 N•m (30 kgf•cm) for a reduction ratio of 50 or more.
- Rotation direction in shaded boxes are in the same direction as the motor rotation. Direction in unshaded boxes are in the opposite direction as the motor rotation.
- Rotation speed don't include motor slippage. The actual values will be between 2 and 20% lower, depending on the load.

Condenser

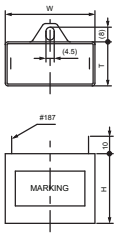

Motor type	Voltage (V)	Capacity (μF)	Condenser type	W (mm)	T (mm)	H (mm)
A6HR06A	1ph100 1ph110	3.0	DMF-25305	36	16	25
A6HR06C	1ph200 1ph220	0.8	DMF-45804	36	16	25
A6HR06D	1ph220 1ph240	0.7	DMF-45704	36	16	25

Dimensions

Gear motors

Motor type : A6HR06□

Gear head type : G6□D

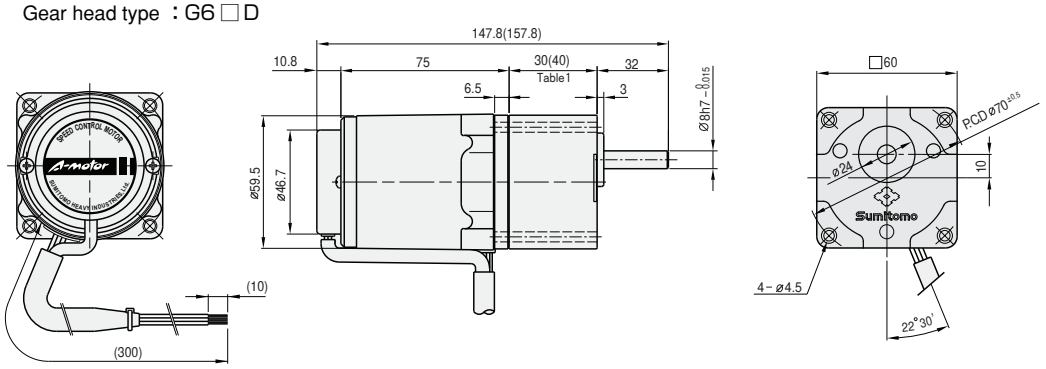

Gear head output shaft detail

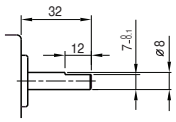

Table1. Gear head length

Gear head size	Length(mm)
G63D～G618D	30
G620D～G6200D	40

Table2. Weight

		Weight(kg)
Motor		0.76
Gear head	G63D ～ G618D	0.24
	G620D ～ G640D	0.30
	G650D ～ G6200D	0.33
Intermediate gear head		0.18

Motor

Type : A6HR06□

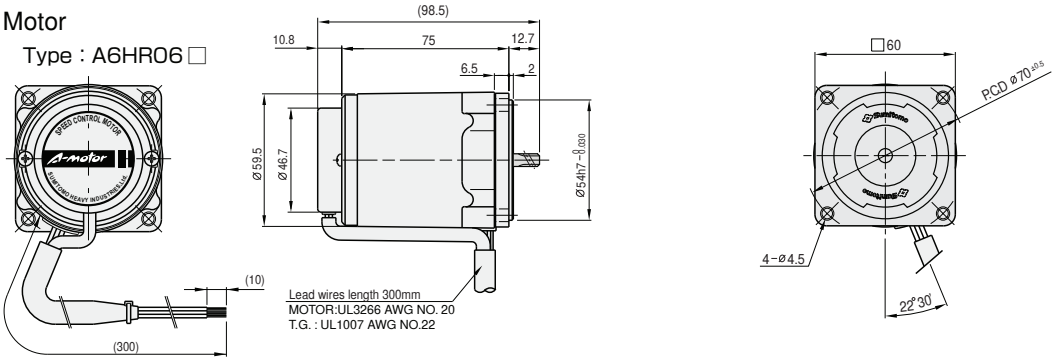

Intermediate gear head

Type: G6XH10

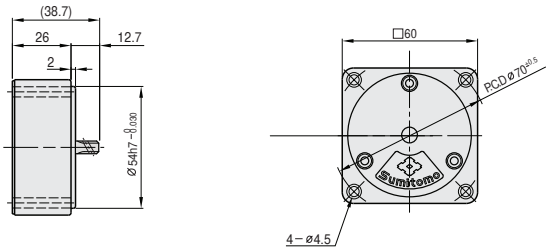

Related information

Selection procedure: p. 91

Options: Induction. p. 169

Standard specifications: p. 115

Technical information: p. 175

15W □70mm

Socket-type speed control motors

Reversible motors

Motor specification table

Frame size mm sq	Motor Type	Controller Type	Poles	Output	Voltage	Frequency	Time ratiang	Speed range	Allowable torque At 1200r/min		Allowable torque At 90r/min		Starting torque		Over-heating pro-tection	Standard	Condenser
				(W)	(V)	(Hz)		(r/min)	(N·m)	(Kgf·cm)	(N·m)	(Kgf·cm)	(N·m)	(Kgf·cm)			(μF)
70	A7HR15A	CAH90A	4	15	1ph100	50	30Min.	90-1400	0.100	1.00	0.045	0.45	0.080	0.80	TP	CE	6.0
						60		90-1700	0.090	0.90			0.057	0.57			
					1ph110	60		90-1700	0.120	1.20	0.048	0.48	0.075	0.75			
	A7HR15C	CAH90C	4	15	1ph200	50	30Min.	90-1400	0.100	1.00	0.045	0.45	0.080	0.80	TP	CE	1.5
						60		90-1700	0.090	0.90			0.057	0.57			
					1ph220	60		90-1700	0.120	1.20	0.048	0.48	0.075	0.75			
	A7HR15D	CAH90D	4	15	1ph220	50	30Min.	90-1400	0.090	0.90	0.046	0.46	0.075	0.75	TP	CE	1.2
					1ph240				0.120	1.20			0.090	0.90			

- The capacitor condenser depends on the voltage in use. Be sure to use the correct capacity for the voltage.
- The use of an incorrect condenser capacity can cause malfunctions. To ensure that you order the correct model, check the voltage in use before ordering.
- All the motor types in the table above are CE Mark and thermal protected (TP) is built in the coil.

Gear head rating torque table

Gear head type: G7□K

Frequency	Reduction ratio		3	3.6	5	6	7.5	9	10	12.5	15	18	20	25
50Hz	Ouput speed	r/min	500	417	300	250	200	166	150	120	100	83	75	60
	Rating torque	N·m	0.31	0.38	0.53	0.64	0.79	0.95	1.06	1.32	1.59	1.90	1.90	2.37
		Kgf·cm	3.2	3.9	5.4	6.5	8.1	9.7	10.8	13.5	16.2	19.4	19.4	24.2
60Hz	Ouput speed	r/min	600	500	360	300	240	200	180	144	120	100	90	72
	Rating torque	N·m	0.29	0.35	0.50	0.60	0.75	0.89	0.99	1.25	1.49	1.79	1.79	2.24
		Kgf·cm	3.0	3.6	5.1	6.1	7.6	9.1	10.1	12.7	15.2	18.2	18.2	22.8

Gear head type: G7□K

Frequency	Reduction ratio		30	36	40	50	60	75	90	100	120	150	180	200
50Hz	Ouput speed	r/min	50	41	37	30	25	20	16	15	12	10	8	7.5
	Rating torque	N·m	2.85	3.42	3.81	4.28	4.90	4.90	4.90	4.90	4.90	4.90	4.90	4.90
		Kgf·cm	29.1	34.9	38.8	43.6	50.0	50.0	50.0	50.0	50.0	50.0	50.0	50.0
60Hz	Ouput speed	r/min	60	50	45	36	30	24	20	18	15	12	10	9
	Rating torque	N·m	2.68	3.22	3.58	4.02	4.83	4.90	4.90	4.90	4.90	4.90	4.90	4.90
		Kgf·cm	27.3	32.8	36.5	41.0	49.2	50.0	50.0	50.0	50.0	50.0	50.0	50.0

- □ in gear head type names indicates the reduction ratio.
- Intermediate gear heads are for use with gear heads having a reduction ratio of 25 or more. When an intermediate gear head is used, the rating torque is 3.92 N•m (40 kgf•cm) for a reduction ratio between 25 and 40, and 4.90 N•m (50 kgf•cm) for a reduction ratio of 50 or more.
- Rotation direction in shaded boxes are in the same direction as the motor rotation. Direction in unshaded boxes are in the opposite direction as the motor rotation.
- Rotation speed don't include motor slippage. The actual values will be between 2 and 20% lower, depending on the load.

Condenser

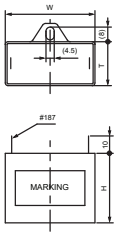

Motor type	Voltage	Capacity	Condenser type	W	T	H
	(V)	(μF)		(mm)	(mm)	(mm)
A7HR15A	1ph100	6.0	DMF-25605	38	19	29
	1ph110					
A7HR15C	1ph200	1.5	DMF-45155	36	16	25
	1ph220					
A7HR15D	1ph220	1.2	DMF-45125	36	16	25
	1ph240					

Dimensions

Gear motors

Motor type ：A7HR15□

Gear head type ：G7□K

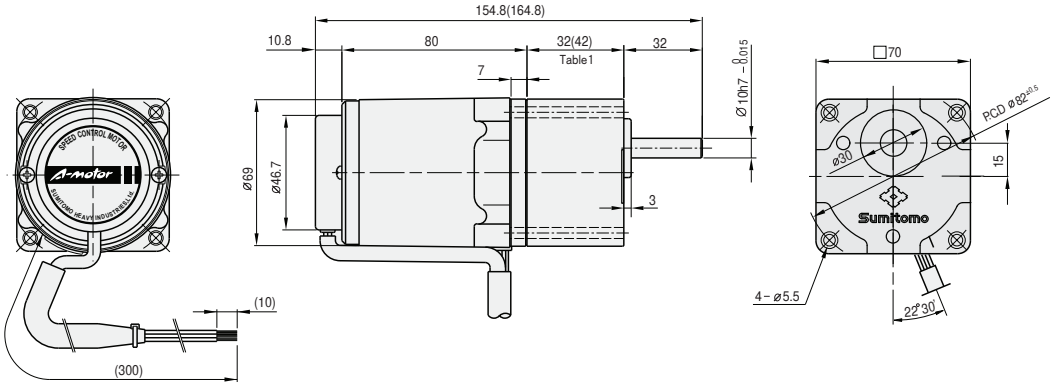

Gear head output shaft detail

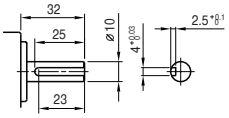

Key size

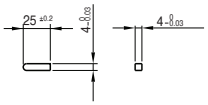

Table1. Gear head length

Gear head size	Length(mm)
G73K～G718K	32
G720K～G7200K	42

Table2. Weight

		Weight(kg)
Motor		1.12
Gear head	G73K ～ G718K	0.38
	G720K ～ G740K	0.47
	G750K ～ G7200K	0.52
Intermediate gear head		0.32

Motor

Type：A7HR15□

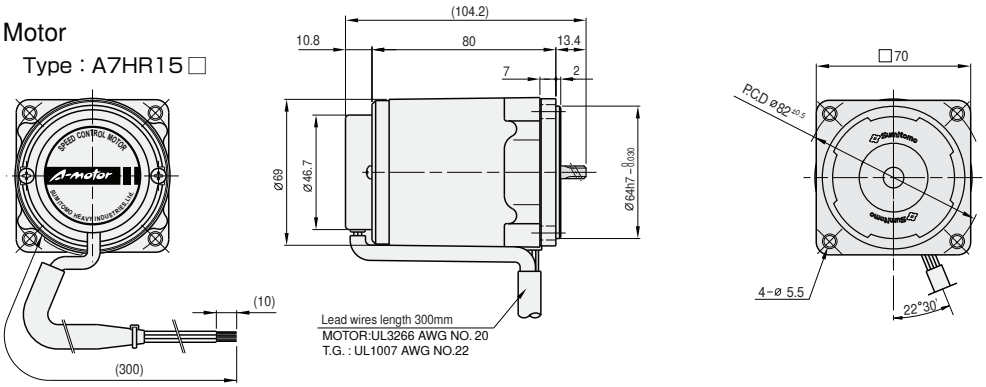

Intermediate gear head

Type: G7XH10

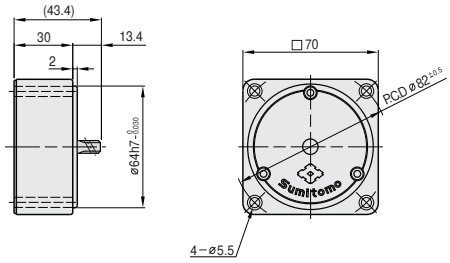

Related information

Selection procedure: p. 91

Options: Induction. p. 169

Standard specifications: p. 115

Technical information: p. 175

25W □80mm

Socket-type speed control motors

Reversible motors

Motor specification table

Frame size mm sq	Motor Type	Controller Type	Poles	Output	Voltage	Frequency	Time ratiang	Speed range	Allowable torque At 1200r/min		Allowable torque At 90r/min		Starting torque		Over-heating pro-tection	Standard	Condenser
				(W)	(V)	(Hz)		((r/min)	(N·m)	(Kgf·cm)	(N·m)	(Kgf·cm)	(N·m)	(Kgf·cm)			(μF)
80	A8HR25A	CAH90A	4	25	1ph100	50	30Min.	90-1400	0.230	2.30	0.070	0.70	0.135	1.35	TP	CE	10. 0
						60		90-1700	0.200	2.00			0.110	1.10			
					1ph110	60		90-1700	0.230	2.30	0.076	0.76	0.140	1.40			
	A8HR25C	CAH90C	4	25	1ph200	50	30Min.	90-1400	0.230	2.30	0.070	0.70	0.135	1.35	TP	CE	2. 5
						60		90-1700	0.200	2.00			0.110	1.10			
					1ph220	60		90-1700	0.260	2.60	0.076	0.76	0.140	1.40			
	A8HR25D	CAH90D	4	25	1ph220	50	30Min.	90-1400	0.220	2.20	0.072	0.72	0.135	1.35	TP	CE	2.0
					1ph240				0.260	2.60			0.190	1.90			

- The capacitor condenser depends on the voltage in use. Be sure to use the correct capacity for the voltage.
- The use of an incorrect condenser capacity can cause malfunctions. To ensure that you order the correct model, check the voltage in use before ordering.
- All the motor types in the table above are CE Mark and thermal protected (TP) is built in the coil.

Gear head rating torque table

Gear head type: G8□K

Frequency	Reduction ratio		3	3.6	5	6	7.5	9	10	12.5	15	18	20	25
50Hz	Ouput speed	r/min	500	417	300	250	200	166	150	120	100	83	75	60
	Rating torque	N·m	0.52	0.63	0.87	1.05	1.31	1.57	1.74	2.19	2.62	3.15	3.15	3.94
		Kgf·cm	5.3	6.4	8.9	10.7	13.4	16.0	17.8	22.3	26.7	32.1	32.1	40.2
60Hz	Ouput speed	r/min	600	500	360	300	240	200	180	144	120	100	90	72
	Rating torque	N·m	0.43	0.51	0.72	0.85	1.07	1.28	1.43	1.78	2.15	2.57	2.58	3.22
		Kgf·cm	4.4	5.2	7.3	8.7	10.9	13.1	14.6	18.2	21.9	26.3	26.3	32.9

Gear head type: G8□K

Frequency	Reduction ratio		30	36	40	50	60	75	90	100	120	150	180	200
50Hz	Ouput speed	r/min	50	41	37	30	25	20	16	15	12	10	8	7.5
	Rating torque	N·m	4.72	5.66	6.29	7.12	7.84	7.84	7.84	7.84	7.84	7.84	7.84	7.84
		Kgf·cm	48.2	57.8	64.2	72.6	80.0	80.0	80.0	80.0	80.0	80.0	80.0	80.0
60Hz	Ouput speed	r/min	60	50	45	36	30	24	20	18	15	12	10	9
	Rating torque	N·m	3.86	4.64	5.16	5.82	6.99	7.84	7.84	7.84	7.84	7.84	7.84	7.84
		Kgf·cm	39.4	47.3	52.6	59.4	71.3	80.0	80.0	80.0	80.0	80.0	80.0	80.0

- □ in gear head type names indicates the reduction ratio.
- Intermediate gear heads are for use with gear heads having a reduction ratio of 25 or more. When an intermediate gear head is used, the rating torque is 5.88 N•m (60 kgf•cm) for a reduction ratio between 25 and 40, and 7.84 N•m (80 kgf•cm) for a reduction ratio of 50 or more.
- Rotation direction in shaded boxes are in the same direction as the motor rotation. Direction in unshaded boxes are in the opposite direction as the motor rotation.
- Rotation speed don't include motor slippage. The actual values will be between 2 and 20% lower, depending on the load.

Condenser

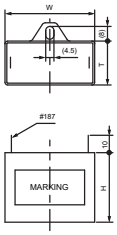

Motor type	Voltage	Capacity	Condenser type	W	T	H
	(V)	(μF)		(mm)	(mm)	(mm)
A8HR25A	1ph100 1ph110	10.0	DMF-251006	47	19	28
A8HR25C	1ph200 1ph220	2.5	DMF-45255	47	19	28
A8HR25D	1ph220 1ph240	2.0	DMF-45205	38	19	29

Dimensions

Gear motors

Motor type : A8HR25□

Gear head type : G8□K

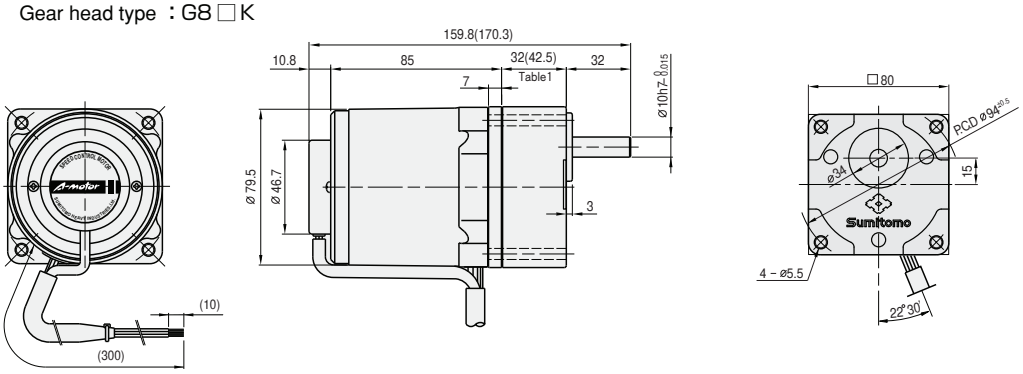

Gear head output shaft detail

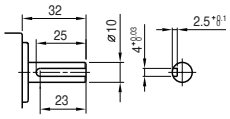

Key size

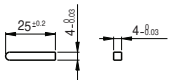

Table1. Gear head length

Gear head size	Length (mm)
G83K ～G818K	32
G820K ～G8200K	42.5

Table2. Weight

		Weight(kg)
Motor		1.60
Gear head	G83K ～ G818K	0.43
	G820K ～ G840K	0.57
	G850K ～ G8200K	0.61
Intermediate gear head		0.43

Motor

Type : A8HR25□

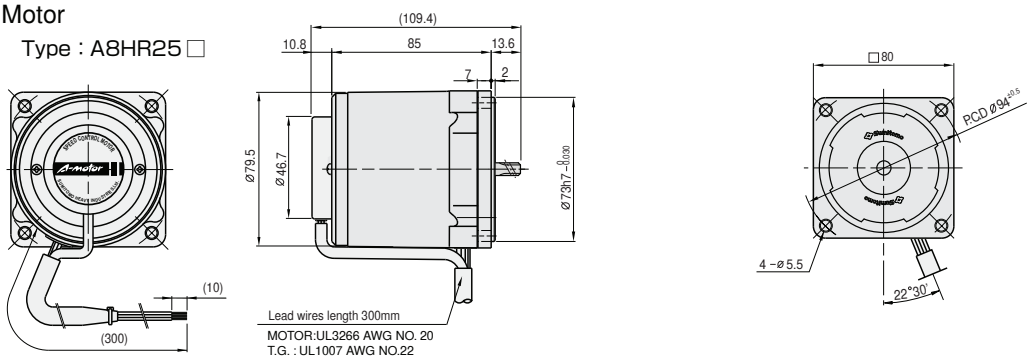

Intermediate gear head

Type: G8XH10

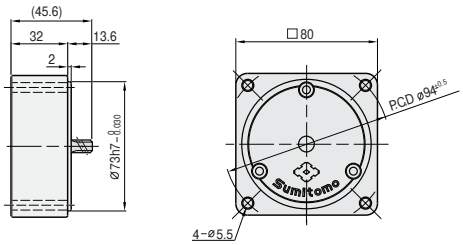

Related information

Selection procedure: p. 91

Options: Induction. p. 169

Standard specifications: p. 115

Technical information: p. 175

40W □90mm

Socket-type speed control motors

Reversible motors

Motor specification table

Frame size mm sq	Motor Type	Controller Type	Poles	Output	Voltage	Frequency	Time ratiang	Speed range	Allowable torque At 1200r/min		Allowable torque At 90r/min		Starting torque		Over-heating pro-tection	Standard	Condenser
				(W)	(V)	(Hz)		(r/min)	(N·m)	(Kgf·cm)	(N·m)	(Kgf·cm)	(N·m)	(Kgf·cm)			(μF)
90	A9HR40A	CAH90A	4	40	1ph100	50	30Min.	90-1400	0.360	3.60	0.080	0.80	0.235	2.35	TP	CE	15. 0
						60		90-1700	0.300	3.00			0.200	2.00			
					1ph110	60		90-1700	0.360	3.60	0.084	0.84	0.270	2.70			
	A9HR40C	CAH90C	4	40	1ph200	50	30Min.	90-1400	0.360	3.60	0.080	0.80	0.235	2.35	TP	CE	4. 0
						60		90-1700	0.300	3.00			0.200	2.00			
					1ph220	60		90-1700	0.300	3.00	0.084	0.84	0.270	2.70			
	A9HR40D	CAH90D	4	40	1ph220	50	30Min.	90-1400	0.340	3.40	0.083	0.83	0.200	2.00	TP	CE	3.0
					1ph240				0.400	4.00			0.280	2.80			

- The capacitor condenser depends on the voltage in use. Be sure to use the correct capacity for the voltage.
- The use of an incorrect condenser capacity can cause malfunctions. To ensure that you order the correct model, check the voltage in use before ordering.
- All the motor types in the table above are CE Mark and thermal protected (TP) is built in the coil.

Gear head rating torque table

Gear head type: G9A□K

Frequency	Reduction ratio		3	3.6	5	6	7.5	9	10	12.5	15	18	20	25
50Hz	Ouput speed	r/min	500	417	300	250	200	166	150	120	100	83	75	60
	Rating torque	N·m	0.81	0.97	1.35	1.62	2.03	2.43	2.70	3.37	4.05	4.86	4.86	6.09
		Kgf·cm	8.3	9.9	13.8	16.5	20.7	24.8	27.5	34.4	41.3	49.6	49.6	62.1
60Hz	Ouput speed	r/min	600	500	360	300	240	200	180	144	120	100	90	72
	Rating torque	N·m	0.67	0.80	1.11	1.33	1.67	2.00	2.23	2.78	3.33	4.00	4.01	5.01
		Kgf·cm	6.8	8.2	11.3	13.6	17.0	20.4	22.7	28.4	34.0	40.8	40.9	51.1

Gear head type: G9A□K

Frequency	Reduction ratio		30	36	40	50	60	75	90	100	120	150	180	200
50Hz	Ouput speed	r/min	50	41	37	30	25	20	16	15	12	10	8	7.5
	Rating torque	N·m	7.30	8.76	9.73	9.80	9.80	9.80	9.80	9.80	9.80	9.80	9.80	9.80
		Kgf·cm	74.5	89.4	99.3	100.0	100.0	100.0	100.0	100.0	100.0	100.0	100.0	100.0
60Hz	Ouput speed	r/min	60	50	45	36	30	24	20	18	15	12	10	9
	Rating torque	N·m	6.01	7.21	8.02	9.80	9.80	9.80	9.80	9.80	9.80	9.80	9.80	9.80
		Kgf·cm	61.3	73.6	81.8	100.0	100.0	100.0	100.0	100.0	100.0	100.0	100.0	100.0

- □ in gear head type names indicates the reduction ratio.
- When an intermediate gear head is used, the rating torque is 9.80N · m(100kgf · cm).
- Rotation direction in shaded boxes are in the same direction as the motor rotation. Direction in unshaded boxes are in the opposite direction as the motor rotation.
- Rotation speed don't include motor slippage. The actual values will be between 2 and 20% lower, depending on the load.

Condenser

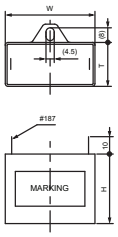

Motor type	Voltage	Capacity	Condenser type	W	T	H
	(V)	(μF)		(mm)	(mm)	(mm)
A9HR40A	1ph100	15.0	DMF-251506	50	25	40
	1ph110					
A9HR40C	1ph200	4.0	DMF-45405	48	21	33
	1ph220					
A9HR40D	1ph220	3.0	DMF-45305	47	19	28
	1ph240					

Dimensions

Gear motors

Motor type : A9 HR40 □

Gear head type : G9A □ K

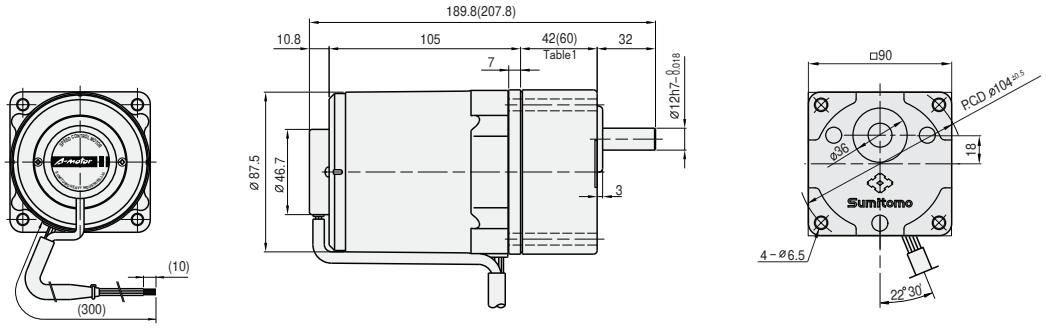

Gear head output shaft detail

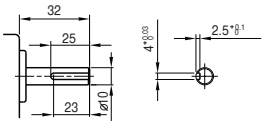

Key size

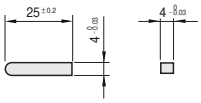

Table1. Gear head length

Gear head size	Length(mm)
G9A3K～G9A18K	42
G9A20K～G9A200K	60

Table2. Weight

		Weight(kg)
Motor		2.42
Gear head	G9A3K ～ G9A18K	0.73
	G9A20K ～ G9A40K	1.03
	G9A50K ～ G9A200K	1.13
Intermediate gear head		0.60

Motor

Type : A9 HR40 □

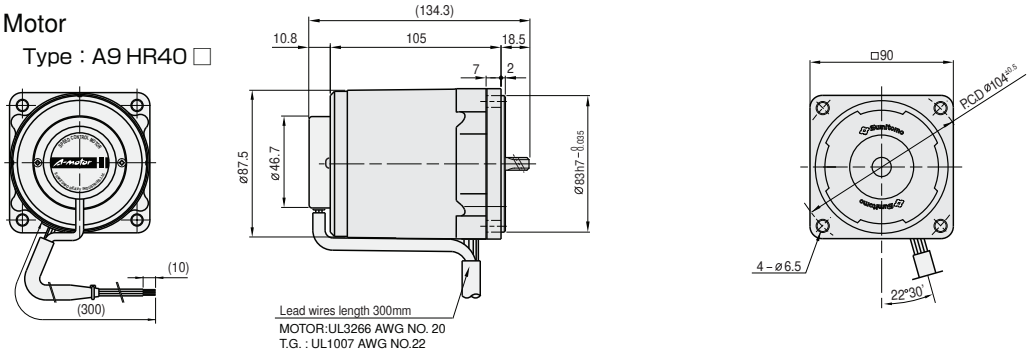

Intermediate gear head

Type: G9XH10

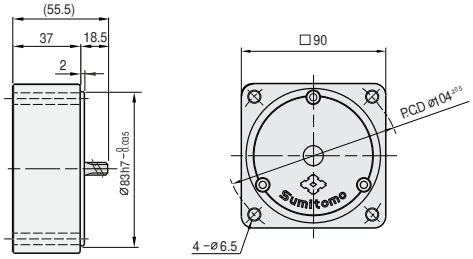

Related information

Selection procedure: p. 91

Options: Induction. p. 169

Standard specifications: p. 115

Technical information: p. 175

MEMO

BIBUS

BIBUS s.r.o.
+420 547 125 300
www.bibus.cz

Socket-type speed controllers(W/Electromagnetic brake motors)

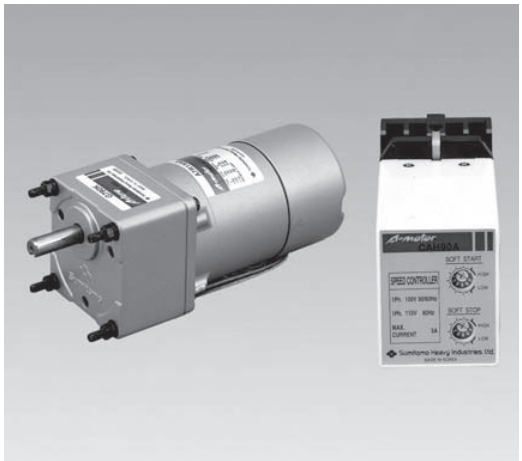

W/Electromagnetic brake motors

- Product sets consisting of special motor with electromagnetic brake and socket-type speed controllers that can adjust the motor speed.
- Speed controllers are compact and multifunctional.
- Controller, special motor and condenser must be wired externally.
- Speed range:
  50 Hz: 90 to 1,400 r/min
  60 Hz: 90 to 1,700 r/min
- Motors have built-in tachogenerators (TG).
- Motors can be stopped instantly using a built-in electronic brake function. (Optional external braking resistor must be attached.)
- Motor must be completely stopped before motor operation direction can be switched.
- Acceleration/deceleration time can be set, so motor can be accelerated/decelerated gradually (soft start, soft stop).
- Time rating: Short-time (30minutes)
- External wiring is requited for condenser attachment and electromagnetic brake comection.
- A single speed control switch can be used to operate multiple controllers simultaneously at the same speed setting.

Astero™

6W □60mm

Socket-type speed control motors

Electromagnetic brakes motors

Motor specification table

Frame size mm sq	Motor Type	Controller Type	Poles	Output (W)	Voltage (V)	Frequency (Hz)	Time ratiang	Speed range (r/min)	Allowable torque At 1200r/min (N·m)	Allowable torque At 1200r/min (Kgf·cm)	Allowable torque At 90r/min (N·m)	Allowable torque At 90r/min (Kgf·cm)	Starting torque (N·m)	Starting torque (Kgf·cm)	Over-heating pro-tection	Standard	Condenser (μF)
60	A6HR06AB	CAH90A	4	6	1ph100	50	30min.	90-1400	0.050	0.50	0.030	0.30	0.039	0.39	ZP	CE	3.0
						60		90-1700	0.038	0.38			0.036	0.36			
					1ph110	60		90-1700	0.050	0.50			0.044	0.44			
	A6HR06CB	CAH90C	4	6	1ph200	50	30min.	90-1400	0.050	0.50	0.030	0.30	0.039	0.39	ZP	CE	0. 8
						60		90-1700	0.038	0.38			0.036	0.36			
					1ph220	60		90-1700	0.050	0.50			0.044	0.44			
	A6HR06DB	CAH90D	4	6	1ph220	50	30min.	90-1400	0.045	0.45	0.030	0.30	0.045	0.45	ZP	CE	0.7
					1ph240				0.056	0.56			0.049	0.49			

- The capacitor condenser depends on the voltage in use. Be sure to use the correct capacity for the voltage.
- The use of an incorrect condenser capacity can cause malfunctions. To ensure that you order the correct model, check the voltage in use before ordering.
- All the motor types in the table above are CE Mark and impedance-protected (ZP) types.

Gear head rating torque table

Gear head type: G6□D

Frequency	Reduction ratio		3	3.6	5	6	7.5	9	10	12.5	15	18	20	25
50Hz	Ouput speed	r/min	500	417	300	250	200	166	150	120	100	83	75	60
	Rating torque	N·m	0.13	0.15	0.21	0.26	0.31	0.38	0.42	0.53	0.63	0.76	0.76	0.95
		Kgf·cm	1.3	1.5	2.1	2.6	3.2	3.9	4.3	5.4	6.4	7.7	7.7	9.7
60Hz	Ouput speed	r/min	600	500	360	300	240	200	180	144	120	100	90	72
	Rating torque	N·m	0.10	0.13	0.17	0.21	0.26	0.30	0.34	0.43	0.51	0.62	0.62	0.76
		Kgf·cm	1.0	1.3	1.7	2.1	2.6	3.1	3.5	4.4	5.2	6.3	6.3	7.8

Gear head type: G6□D

Frequency	Reduction ratio		30	36	40	50	60	75	90	100	120	150	180	200
50Hz	Ouput speed	r/min	50	41	37	30	25	20	16	15	12	10	8	7.5
	Rating torque	N·m	1.14	1.36	1.52	1.72	2.06	2.57	2.94	2.94	2.94	2.94	2.94	2.94
		Kgf·cm	11.6	13.9	15.5	17.5	21.0	26.2	30.0	30.0	30.0	30.0	30.0	30.0
60Hz	Ouput speed	r/min	60	50	45	36	30	24	20	18	15	12	10	9
	Rating torque	N·m	0.92	1.11	1.24	1.39	1.67	2.09	2.50	2.78	2.94	2.94	2.94	2.94
		Kgf·cm	9.4	11.3	12.6	14.2	17.0	21.3	25.5	28.4	30.0	30.0	30.0	30.0

- □ in gear head type names indicates the reduction ratio.
- Intermediate gear heads are for use with gear heads having a reduction ratio of 30 or more. When an intermediate gear head is used, the rating torque is 1.96 N•m (20 kgf•cm) for a reduction ratio between 30 and 40, and 2.94 N•m (30 kgf•cm) for a reduction ratio of 50 or more.
- Rotation direction in shaded boxes are in the same direction as the motor rotation. Direction in unshaded boxes are in the opposite direction as the motor rotation.
- Rotation speed don't include motor slippage. The actual values will be between 2 and 20% lower, depending on the load.

Condenser

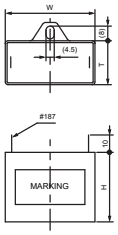

Motor type	Voltage (V)	Capacity (μF)	Condenser type	W (mm)	T (mm)	H (mm)
A6HR06A B	1ph100	3.0	DMF-25305	36	16	25
	1ph110					
A6HR06C B	1ph200	0.8	DMF-45804	36	16	25
	1ph220					
A6HR06D B	1ph220	0.7	DMF-45704	36	16	25
	1ph240					

Dimensions

Gear motors

Motor type : A6HR06□B

Gear head type : G6□D

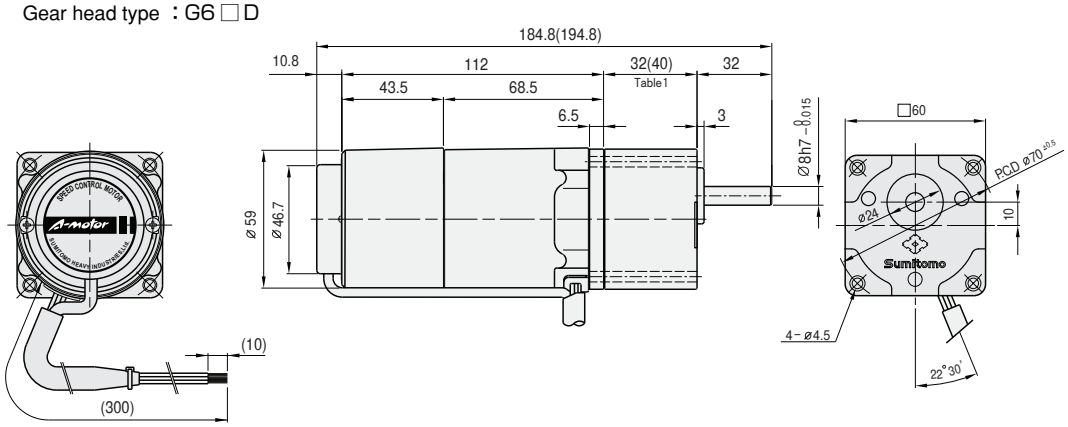

Gear head output shaft detail

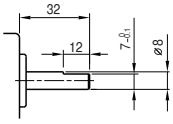

Table1. Gear head length

Gear head size	Length(mm)
G63D～G618D	30
G620D～G6200D	40

Table2. Weight

		Weight(kg)
Motor		1.00
Gear head	G63D ～ G618D	0.24
	G620D ～ G640D	0.30
	G650D ～ G6200D	0.33
Intermediate gear head		0.18

Motor

Type : A6HR06□B

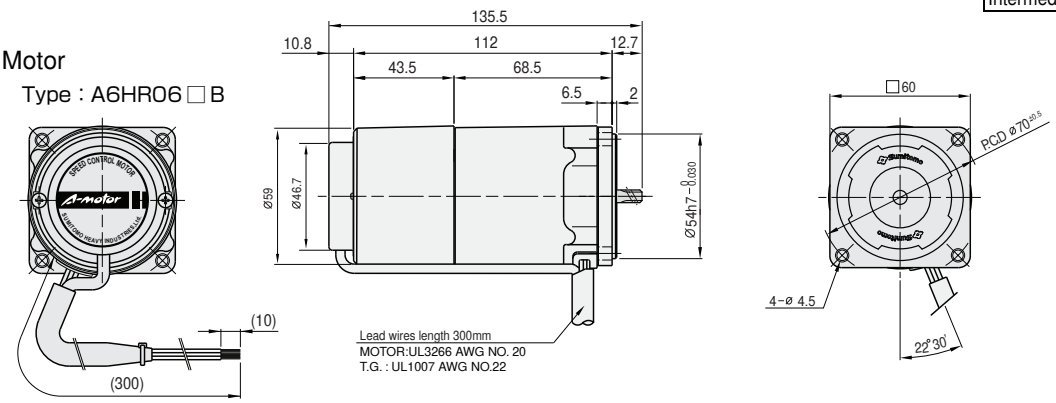

Intermediate gear head

Type: G6XH10

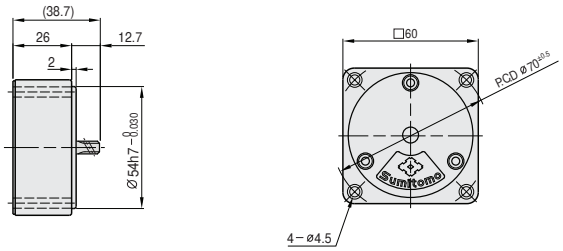

Related information

Selection procedure: p. 91

Options: Induction. p. 169

Standard specifications: p. 115

Technical information: p. 175

15W □70mm

Socket-type speed control motors

Electromagnetic brakes motors

Motor specification table

Frame size mm sq	Motor Type	Controller Type	Poles	Output	Voltage	Frequency	Time ratiang	Speed range	Allowable torque At 1200r/min		Allowable torque At 90r/min		Starting torque		Over-heating pro-tection	Standard	Condenser
				(W)	(V)	(Hz)		(r/min)	(N·m)	(Kgf·cm)	(N·m)	(Kgf·cm)	(N·m)	(Kgf·cm)			(μF)
70	A7HR15AB	CAH90A	4	15	1ph100	50	30min.	90-1400	0.110	1.10	0.045	0.45	0.078	0.78	TP	CE	6.0
						60		90-1700	0.085	0.85			0.068	0.68			
					1ph110	60		90-1700	0.110	1.10			0.080	0.80			
	A7HR15CB	CAH90C	4	15	1ph200	50	30min.	90-1400	0.110	1.10	0.045	0.45	0.078	0.78	TP	CE	1. 5
						60		90-1700	0.085	0.85			0.068	0.68			
					1ph220	60		90-1700	0.110	1.10			0.080	0.80			
	A7HR15DB	CAH90D	4	15	1ph220	50	30min.	90-1400	0.100	1.00	0.045	0.45	0.077	0.77	TP	CE	1. 2
					1ph240				0.120	1.20			0.099	0.99			

- The capacitor condenser depends on the voltage in use. Be sure to use the correct capacity for the voltage.
- The use of an incorrect condenser capacity can cause malfunctions. To ensure that you order the correct model, check the voltage in use before ordering.
- All the motor types in the table above are CE Mark and thermal protected (TP) is built in the coil.

Gear head rating torque table

Gear head type: G7□K

Frequency	Reduction ratio		3	3.6	5	6	7.5	9	10	12.5	15	18	20	25
50Hz	Ouput speed	r/min	500	417	300	250	200	166	150	120	100	83	75	60
	Rating torque	N·m	0.31	0.38	0.53	0.64	0.79	0.95	1.06	1.32	1.59	1.90	1.90	2.37
		Kgf·cm	3.2	3.9	5.4	6.5	8.1	9.7	10.8	13.5	16.2	19.4	19.4	24.2
60Hz	Ouput speed	r/min	600	500	360	300	240	200	180	144	120	100	90	72
	Rating torque	N·m	0.29	0.35	0.50	0.60	0.75	0.89	0.99	1.25	1.49	1.79	1.79	2.24
		Kgf·cm	3.0	3.6	5.1	6.1	7.6	9.1	10.1	12.7	15.2	18.2	18.2	22.8

Gear head type: G7□K

Frequency	Reduction ratio		30	36	40	50	60	75	90	100	120	150	180	200
50Hz	Ouput speed	r/min	50	41	37	30	25	20	16	15	12	10	8	7.5
	Rating torque	N·m	2.85	3.42	3.81	4.28	4.90	4.90	4.90	4.90	4.90	4.90	4.90	4.90
		Kgf·cm	29.1	34.9	38.8	43.6	50.0	50.0	50.0	50.0	50.0	50.0	50.0	50.0
60Hz	Ouput speed	r/min	60	50	45	36	30	24	20	18	15	12	10	9
	Rating torque	N·m	2.68	3.22	3.58	4.02	4.83	4.90	4.90	4.90	4.90	4.90	4.90	4.90
		Kgf·cm	27.3	32.8	36.5	41.0	49.2	50.0	50.0	50.0	50.0	50.0	50.0	50.0

- □ in gear head type names indicates the reduction ratio.
- Intermediate gear heads are for use with gear heads having a reduction ratio of 25 or more. When an intermediate gear head is used, the rating torque is 3.92 N•m (40 kgf•cm) for a reduction ratio between 25 and 40, and 4.90 N•m (50 kgf•cm) for a reduction ratio of 50 or more.
- Rotation direction in shaded boxes are in the same direction as the motor rotation. Direction in unshaded boxes are in the opposite direction as the motor rotation.
- Rotation speed don't include motor slippage. The actual values will be between 2 and 20% lower, depending on the load.

Condenser

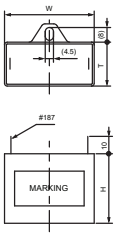

Motor type	Voltage	Capacity	Condenser type	W	T	H
	(V)	(μF)		(mm)	(mm)	(mm)
A7HR15A B	1ph100	6.0	DMF-25605	38	19	29
	1ph110					
A7HR15C B	1ph200	1.5	DMF-45155	36	16	25
	1ph220					
A7HR15D B	1ph220	1.2	DMF-45125	36	16	25
	1ph240					

Dimensions

Gear motors

Motor type ：A7HR15□B

Gear head type ：G7□K

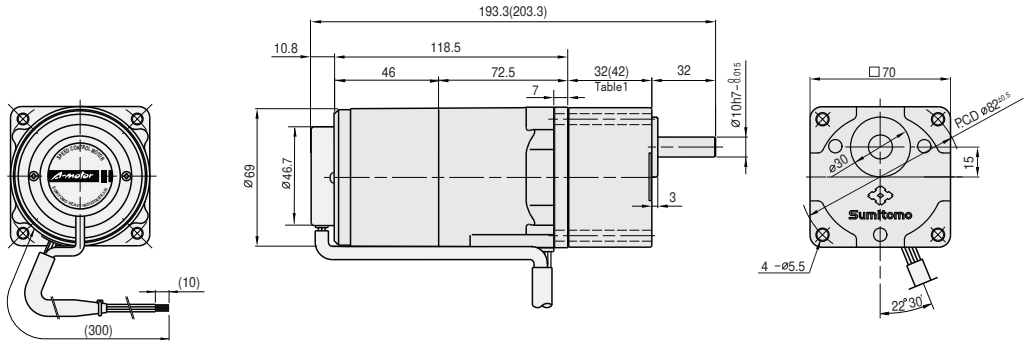

Gear head output shaft detail

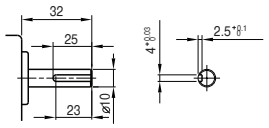

Key size

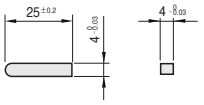

Table1. Gear head length

Gear head size	Length(mm)
G73K～G718K	32
G720K～G7200K	42

Table2. Weight

		Weight(kg)
Motor		1.35
Gear head	G73K ～ G718K	0.38
	G720K ～ G740K	0.47
	G750K ～ G7200K	0.52
Intermediate gear head		0.32

Motor

Type : A7HR15□B

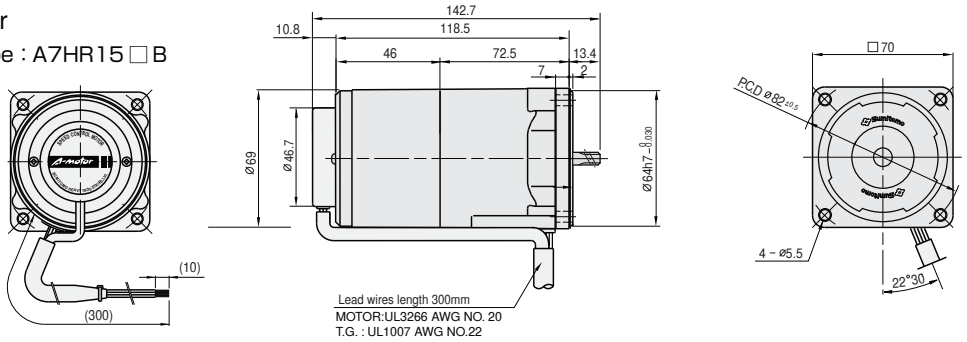

Intermediate gear head

Type: G7XH10

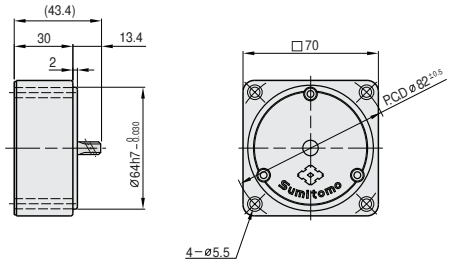

Related information

Selection procedure: p. 91

Options: Induction. p. 169

Standard specifications: p. 115

Technical information: p. 175

25W □80mm

Socket-type speed control motors

Electromagnetic brakes motors

Motor specification table

Frame size mm sq	Motor Type	Controller Type	Poles	Output	Voltage	Frequency	Time ratiang	Speed range	Allowable torque At 1200r/min		Allowable torque At 90r/min		Starting torque		Over-heating pro-tection	Standard	Condenser
				(W)	(V)	(Hz)		(r/min)	(N·m)	(Kgf·cm)	(N·m)	(Kgf·cm)	(N·m)	(Kgf·cm)			(μF)
80	A8HR25AB	CAH90A	4	25	1ph100	50	30min.	90-1400	0.220	2.20	0.070	0.70	0.141	1.41	TP	CE	10.0
						60		90-1700	0.160	1.60			0.119	1.19			
					1ph110	60		90-1700	0.200	2.00			0.144	1.44			
	A8HR25CB	CAH90C	4	25	1ph200	50	30min.	90-1400	0.220	2.20	0.070	0.70	0.141	1.41	TP	CE	2.5
						60		90-1700	0.160	1.60			0.119	1.19			
					1ph220	60		90-1700	0.200	2.00			0.144	1.44			
	A8HR25DB	CAH90D	4	25	1ph220	50	30min.	90-1400	0.210	2.10	0.060	0.60	0.150	1.50	TP	CE	2.0
					1ph240				0.250	2.50			0.194	1.94			

- The capacitor condenser depends on the voltage in use. Be sure to use the correct capacity for the voltage.
- The use of an incorrect condenser capacity can cause malfunctions. To ensure that you order the correct model, check the voltage in use before ordering.
- All the motor types in the table above are CE Mark and thermal protected (TP) is built in the coil.

Gear head rating torque table

Gear head type: G8□K

Frequency	Reduction ratio		3	3.6	5	6	7.5	9	10	12.5	15	18	20	25
50Hz	Ouput speed	r/min	500	417	300	250	200	166	150	120	100	83	75	60
	Rating torque	N·m	0.52	0.63	0.87	1.05	1.31	1.57	1.74	2.19	2.62	3.15	3.15	3.94
		Kgf·cm	5.3	6.4	8.9	10.7	13.4	16.0	17.8	22.3	26.7	32.1	32.1	40.2
60Hz	Ouput speed	r/min	600	500	360	300	240	200	180	144	120	100	90	72
	Rating torque	N·m	0.43	0.51	0.72	0.85	1.07	1.28	1.43	1.78	2.15	2.57	2.58	3.22
		Kgf·cm	4.4	5.2	7.3	8.7	10.9	13.1	14.6	18.2	21.9	26.2	26.3	32.9

Gear head type: G8□K

Frequency	Reduction ratio		30	36	40	50	60	75	90	100	120	150	180	200
50Hz	Ouput speed	r/min	50	41	37	30	25	20	16	15	12	10	8	7.5
	Rating torque	N·m	4.72	5.66	6.29	7.12	7.84	7.84	7.84	7.84	7.84	7.84	7.84	7.84
		Kgf·cm	48.2	57.8	64.2	72.6	80.0	80.0	80.0	80.0	80.0	80.0	80.0	80.0
60Hz	Ouput speed	r/min	60	50	45	36	30	24	20	18	15	12	10	9
	Rating torque	N·m	3.86	4.64	5.16	5.82	6.99	7.84	7.84	7.84	7.84	7.84	7.84	7.84
		Kgf·cm	39.4	47.3	52.6	59.4	71.3	80.0	80.0	80.0	80.0	80.0	80.0	80.0

- □ in gear head type names indicates the reduction ratio.
- Intermediate gear heads are for use with gear heads having a reduction ratio of 25 or more. When an intermediate gear head is used, the rating torque is 5.88 N•m (60 kgf•cm) for a reduction ratio between 25 and 40, and 7.84 N•m (80 kgf•cm) for a reduction ratio of 50 or more.
- Rotation direction in shaded boxes are in the same direction as the motor rotation. Direction in unshaded boxes are in the opposite direction as the motor rotation.
- Rotation speed don't include motor slippage. The actual values will be between 2 and 20% lower, depending on the load.

Condenser

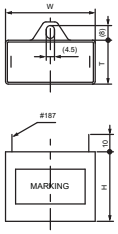

Motor type	Voltage	Capacity	Condenser type	W	T	H
	(V)	(μF)		(mm)	(mm)	(mm)
A8HR25A B	1ph100	10.0	DMF-251006	47	19	28
	1ph110					
A8HR25C B	1ph200	2.5	DMF-45255	47	19	28
	1ph220					
A8HR25D B	1ph220	2.0	DMF-45205	38	19	29
	1ph240					

Dimensions

Gear motors

Motor type : A8HR25□B
Gear head type : G8□K

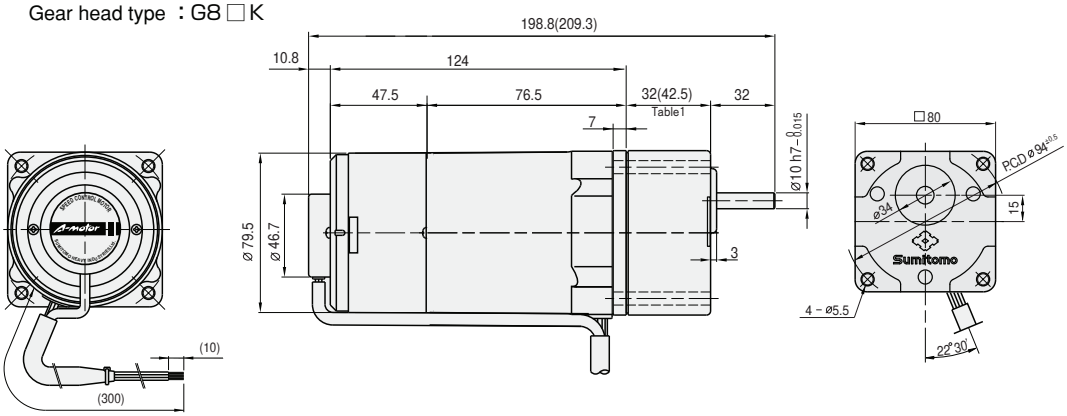

Gear head output shaft detail

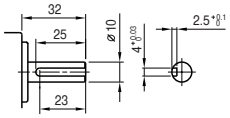

Key size

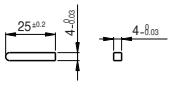

Table1. Gear head length

Gear head size	Length (mm)
G83K ～G818K	32
G820K ～G8200K	42.5

Table2. Weight

		Weight(kg)
Motor		2.00
Gear head	G83K ～ G818K	0.43
	G820K ～ G840K	0.57
	G850K ～ G8200K	0.61
Intermediate gear head		0.43

Motor

Type : A8HR25□B

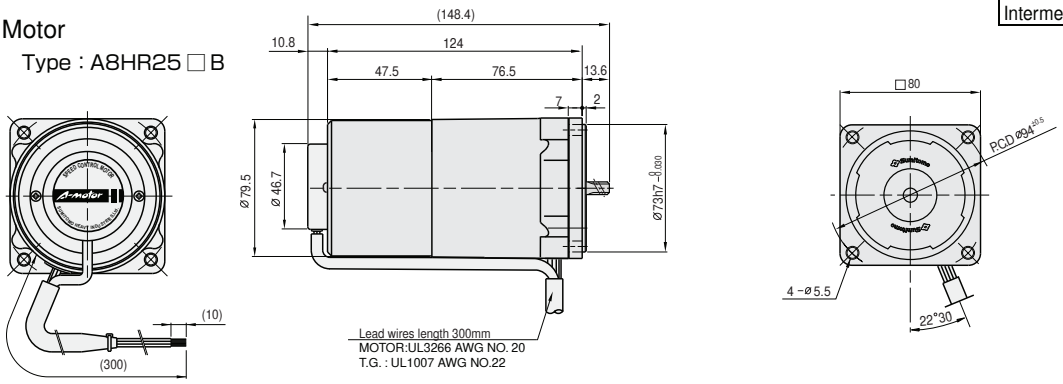

Intermediate gear head

Type: G8XH10

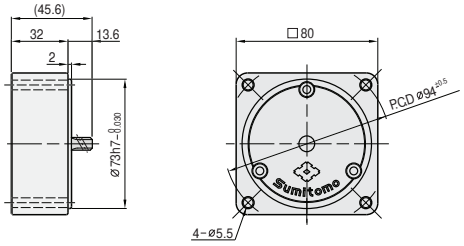

Related information

Selection procedure: p. 91
Options: Induction. p. 169
Standard specifications: p. 115
Technical information: p. 175

40W □90mm

Socket-type speed control motors

Electromagnetic brakes motors

Motor specification table

Frame size mm sq	Motor Type	Controller Type	Poles	Output (W)	Voltage (V)	Frequency (Hz)	Time ratiang	Speed range ((r/min)	Allowable torque At 1200r/min (N·m)	Allowable torque At 1200r/min (Kgf·cm)	Allowable torque At 90r/min (N·m)	Allowable torque At 90r/min (Kgf·cm)	Starting torque (N·m)	Starting torque (Kgf·cm)	Over-heating pro-tection	Standard	Condenser (μF)
90	A9HR40AB	CAH90A	4	40	1ph100	50	30min.	90-1400	0.380	3.80	0.090	0.90	0.274	2.74	TP	CE	15. 0
						60		90-1700	0.290	2.90			0.242	2.42			
					1ph110	60		90-1700	0.360	3.60			0.297	2.97			
	A9HR40CB	CAH90C	4	40	1ph200	50	30min.	90-1400	0.380	3.80	0.090	0.90	0.274	2.74	TP	CE	4. 0
						60		90-1700	0.290	2.90			0.242	2.42			
					1ph220	60		90-1700	0.360	3.60			0.297	2.97			
	A9HR40DB	CAH90D	4	40	1ph220	50	30min.	90-1400	0.350	3.50	0.090	0.90	0.249	2.49	TP	CE	3.0
					1ph240				0.420	4.20			0.310	3.10			

- The capacitor condenser depends on the voltage in use. Be sure to use the correct capacity for the voltage.
- The use of an incorrect condenser capacity can cause malfunctions. To ensure that you order the correct model, check the voltage in use before ordering.
- All the motor types in the table above are CE Mark and thermal protected (TP) is built in the coil.

Gear head rating torque table

Gear head type: G9A□K

Frequency	Reduction ratio		3	3.6	5	6	7.5	9	10	12.5	15	18	20	25
50Hz	Ouput speed	r/min	500	417	300	250	200	166	150	120	100	83	75	60
	Rating torque	N·m	0.81	0.97	1.35	1.62	2.03	2.43	2.70	3.37	4.05	4.86	4.86	6.09
		Kgf·cm	8.3	9.9	13.8	16.5	20.7	24.8	27.5	34.4	41.3	49.6	49.6	62.1
60Hz	Ouput speed	r/min	600	500	360	300	240	200	180	144	120	100	90	72
	Rating torque	N·m	0.67	0.80	1.11	1.33	1.67	2.00	2.23	2.78	3.33	4.00	4.01	5.01
		Kgf·cm	6.8	8.2	11.3	13.6	17.0	20.4	22.7	28.4	34.0	40.8	40.9	51.1

Gear head type: G9A□K

Frequency	Reduction ratio		30	36	40	50	60	75	90	100	120	150	180	200
50Hz	Ouput speed	r/min	50	41	37	30	25	20	16	15	12	10	8	7.5
	Rating torque	N·m	7.30	8.76	9.73	9.80	9.80	9.80	9.80	9.80	9.80	9.80	9.80	9.80
		Kgf·cm	74.5	89.4	99.3	100.0	100.0	100.0	100.0	100.0	100.0	100.0	100.0	100.0
60Hz	Ouput speed	r/min	60	50	45	36	30	24	20	18	15	12	10	9
	Rating torque	N·m	6.01	7.21	8.02	9.80	9.80	9.80	9.80	9.80	9.80	9.80	9.80	9.80
		Kgf·cm	61.3	73.6	81.8	100.0	100.0	100.0	100.0	100.0	100.0	100.0	100.0	100.0

- □ in gear head type names indicates the reduction ratio.
- When an intermediate gear head is used, the rating torque is 9.80N · m(100kgf · cm).
- Rotation direction in shaded boxes are in the same direction as the motor rotation. Direction in unshaded boxes are in the opposite direction as the motor rotation.
- Rotation speed don't include motor slippage. The actual values will be between 2 and 20% lower, depending on the load.

Condenser

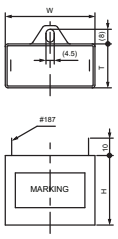

Motor type	Voltage (V)	Capacity (μF)	Condenser type	W (mm)	T (mm)	H (mm)
A9HR40A B	1ph100 1ph110	15.0	DMF-251506	50	25	40
A9HR40C B	1ph200 1ph220	4.0	DMF-45405	48	21	33
A9HR40D B	1ph220 1ph240	3.0	DMF-45305	47	19	28

Dimensions

Gear motors

Motor type : A9HR40□B

Gear head type : G9A□K

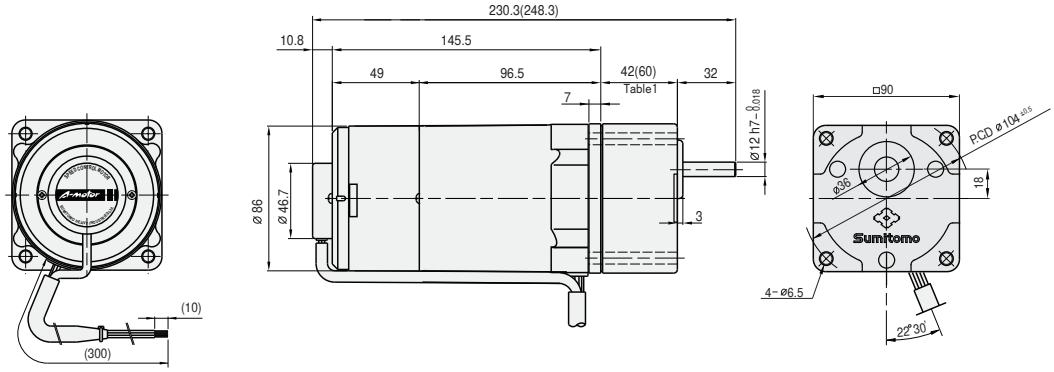

Gear head output shaft detail

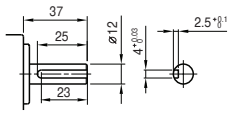

Key size

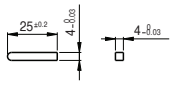

Table1. Gear head length

Gear head size	Length(mm)
G9A3K～G9A18K	42
G9A20K～G9A200K	60

Table2. Weight

		Weight(kg)
Motor		2.87
Gear head	G9A3K ～ G9A18K	0.73
	G9A20K ～ G9A40K	1.03
	G9A50K ～ G9A200K	1.13
Intermediate gear head		0.60

Motor

Type : A9HR40□B

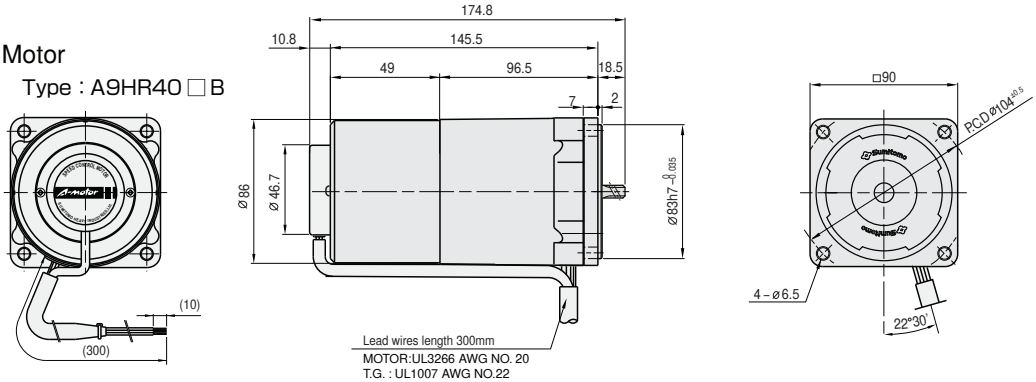

Intermediate gear head

Type: G9XH10

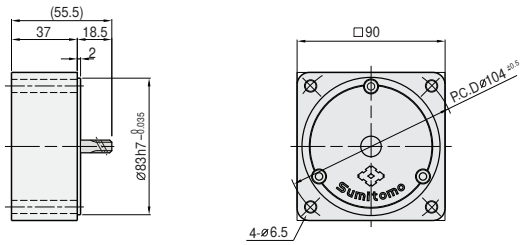

Related information

Selection procedure: p. 91

Options: Induction. p. 169

Standard specifications: p. 115

Technical information: p. 175

MEMO

BIBUS

BIBUS s.r.o.
+420 547 125 300
www.bibus.cz

Brake packs

Brake packs

- Sumitomo's brake packs are non contact types that can instantly stop induction motors or reversible motors by electronic braking.
- To control a motor using brake packs, a DC power supply for the signal is required (12~14DVDC, 0.1A or larger).

Astero™

Overview
Induction
Reversible
Electromagnetic brakes
Terminal boxes
Speed controller (Overview)
Unit type
Socket type
Speed controller (Induction)
Speed controller (Reversible)
Speed controller (Electro-magnetic brake)
Brake packs
Options
Technical Information
Overview
Dimensions
Panel display
Wiring diagram

Overview of brake pack (Characteristics)

1. Brake pack characteristics

Sumitomo's brake packs are non contact types that can instantly stop induction motors or reversible motors by electronic braking. The motor alone can be stopped in less than about 0.1 second. A braking current is applied to the motor for about 0.4 second, then the motor's input power supply is automatically shut off. Unlike electromagnetic brakes, brake packs don't store torque. Since they have no parts to generate mechanical friction, they have long lives. To control a motor using brake packs, a DC power supply for the signal is required (12~14DVDC, 0.1A or larger).

2. Using brake packs

1) Switching the motor's operation direction

Before switching the motor's operation direction, always check that the motor has completely stopped. For an instant stop, the braking current is applied for about 0.4 second. If you try to switch the motor's operation direction during this time interval, the relay contacts generate a large spark, shortening the product life. Don't try to switch the motor's operation direction in the 0.5-second interval after an instant motor stop.

2) Fuses

When connecting a fuse to the power unit, check the motor's braking current value to select the proper fuse capacity. The motor's braking current value is given in the specifications table.

3) Motor temperature rise and continuous operation time

The motor's instant stop operation works properly when the brake pack is used with a short motor operation cycle. However, the shorter the operation cycle is made, the more the motor temperature rises, and the shorter the amount of continuous operation time possible. This problem occurs because the current applied when the motor brakes or starts is several times the amount during rated operation, increasing the temperature rise.

When using a short motor operation cycle, be sure the surface temperature of the motor case doesn't exceed 90 C.

4) Preventing noise

Brake packs come with a noise filter built into the power line. Components such as thyristors may malfunction when the equipment is used in areas of loud external noise. Vibrations may also be generated when the motor stops. Noise sources include equipment such as high-power motors, solenoids and electric welding equipment. To counteract external noise, attach a noise filter to the brake pack's power line as shown below.

When using a brake pack to stop the motor instantly, the braking current is phase-controlled, so some radio noise is generated. This noise won't significantly affect other equipment, but it can be effectively eliminated by connecting a noise filter as shown below.

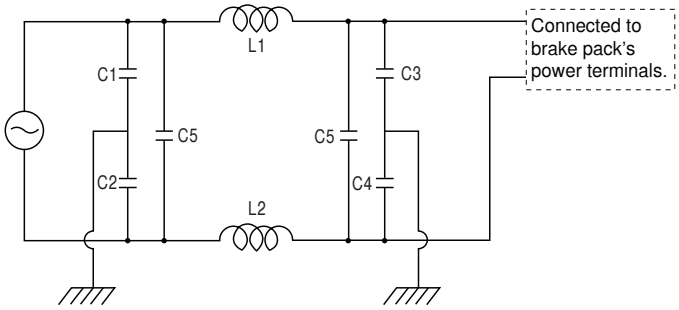

3. Cautions for use of brake packs

1) Wiring cautions

Use the sockets for connections. Don't solder anything to the main unit's pins directly. When connecting sockets, check the terminal numbers. Before inserting the controller into the socket's groove, turn off the power and check the pin numbers. When connecting a noise filter, install the brake pack as close as possible to it, and be sure to connect it to the ground terminal. The RUN/BRAKE signal line should be short, and kept as far from motor lead lines and other power lines as possible.

2) Operation cautions

Don't let the surface temperature of the motor case exceed 90 C during operation with a load. Turn the power OFF when the motor is not in use for extended periods. Don't start or stop the motor by turning the AC power supply ON/OFF, as surge voltage from the switch may cause product damage.

Brake packs (Standard specifications, wiring diagram)

Brake pack main unit

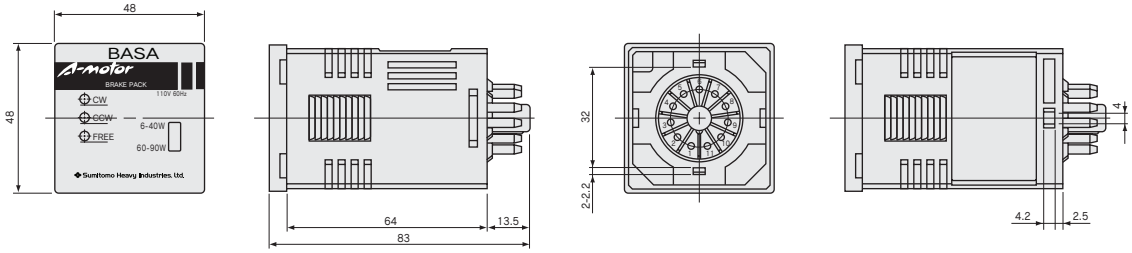

Socket

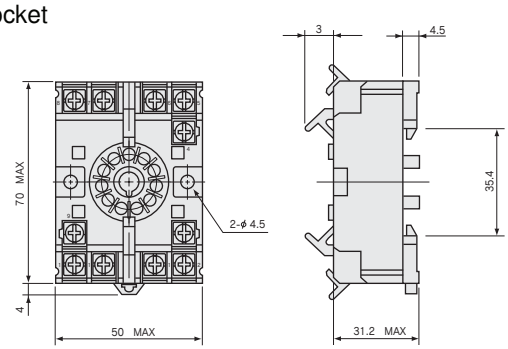

BASA, BASC and BASD are non contact brake packs for use with induction motors or reversible motors.

Item	BASA		BASC		BASD
Voltage	Signal-phase 100V	Signal-phase 110V	Signal-phase 200V	Signal-phase 220V	Single-phase 220～240V
Frequency	50/60Hz	60Hz	50/60Hz	60Hz	50Hz
Applicable motors	Induction motors, Reversible motors (6 ~ 90W)				
Input signals	Photocoupler input 12～24VDC (±10%), CW/CCW/FREE				
Ambient temperature	-10 to +40 C				
Ambient humidity	85% max. (no condensation)				
Insulation resistance	At least 100MΩ when measured with a DC500V megger between the brake pack's power terminal and signal input terminal, at normal temperature and humidity when the brake pack has reached its rated operation.				
Insulation with stand voltage	No malfunction when a 1500V, 50/60Hz current is applied between the brake pack's power terminal and signal input terminal for 1 minute at normal temperature and humidity when the brake pack has reached its rated operation.				

Overview
Induction
Reversible
Electromagnetic brakes
Terminal boxes
Speed controller (Overview)
Unit type
Socket type
Speed controller (Induction)
Speed controller (Reversible)
Speed controller (Electro-magnetic brake)
Brake packs
Options
Technical Information
Overview
Dimensions
Panel display
Wiring diagram

Brake packs

Overview of brake packs (Panel display, wiring diagram)

■Panel display and switches

Input signal display

CW	Lights when CW signal is input.
CCW	Lights when CCW signal is input.
FREE	Lights when FREE signal is input.

Motor output switches

6～40W ■ 60～90W	Set to the 6～40W position when a 6, 15, 25 or 40W motor is connected.
6～40W □ 60～90W ■	Set to the 60～90W position when a 60 or 90W motor is connected.

The switch is set to the 60～90W position at shipment.

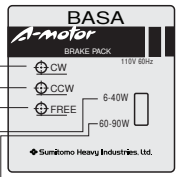

Type	Voltage	Applicable motors
BASA	1ph 100V	Induction motors 6W～90W
		Revercible motors 6W～90W
BASC	1ph 200V	Induction motors 6W～90W
		Revercible motors 6W～90W
BASD	1ph 220V～240V	Induction motors 6W～90W
		Revercible motors 6W～90W

System configuration

The non contact brake packs control the motor's RUN/STOP status in response to signals input from the external controller.

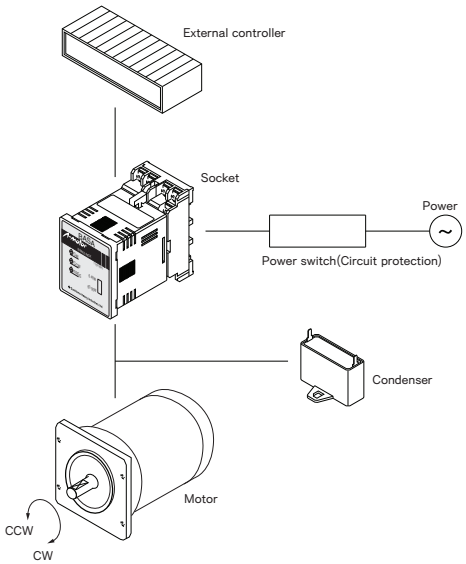

■Cautions for use

Frequent instant motor stops and starts will increase the temperature rise of the brake pack and motor. Use the operation cycle figures below. keep the surface temperature of the motor case exceed 90℃ during operation.

Motor output	Operation cycle
6 ~ 25W	At least 2 seconds
40 ~ 90W	At least 4 seconds

A 2-second cycle means the motor runs for 1 second and stops for 1 second.
A 4-second cycle means the motor runs for 2 seconds and stops for 2 seconds.

■Capacity of protective equipment

When the motor is stopped instantly, a large half-wave rectification current is output for between roughly 0.2 and 0.4 second. When connecting a protective element (circuit protector) to the line that carries this braking current, refer to the table below to select the proper circuit protector capacity.

Brake current (Peak)

Motor output	100V 50Hz	100V 60Hz	200V 50Hz	200V 60Hz	220/240V 50Hz
6W	1.2	1.2	0.5	0.4	0.6
15W	3.1	3.1	1.7	1.5	1.7
25W	7.4	7.4	3.4	3.2	3.5
40W	12.2	12.2	5.4	4.2	6.6
60W	14.2	11.6	8.1	6.2	8.4
90W	17.4	16.4	10.4	8.0	10.6

Overview of brake packs (Wiring diagram)

■ Brake packs BASA, BASC
- 15~90W Induction motor with lead wire (except 220~240V/50HZ)

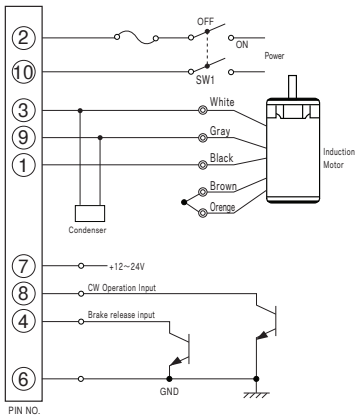

■ Brake packs BASA, BASC
- 6W Induction motor with lead wire (except 220~240V/50HZ)
- 6~90W Induction motor with terminal box (except 220~240V/50HZ)

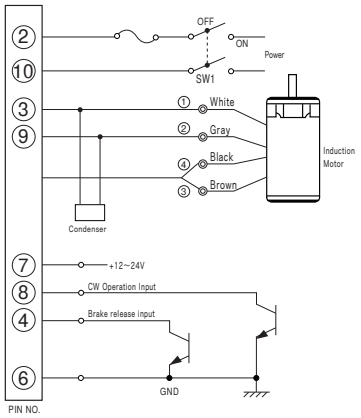

■ Brake pack BASA, BASC
- 6~90W Reversible motor

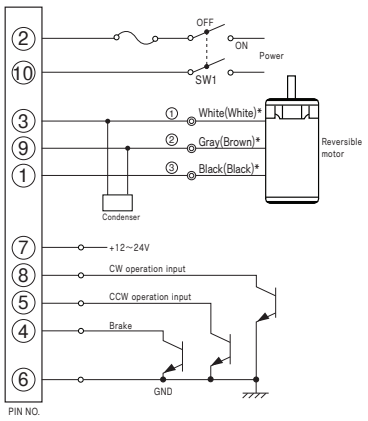

*( )in case of BASD 1ph 220~240V

■Input signal and motor operation

1) Clockwise (CW) operation input (induction motors)

When the CW operation input is turned ON, the motor shaft rotates clockwise. When turned OFF, the motor stops instantly. Induction motors operate using the CW operation input. When connected as shown in the diagram, the motor operates in the clockwise direction. To operate the motor counterclockwise, switch the gray and brown motor lead wires (the white and brown wires for a 220 to 240V/50Hz motor).

2) Counterclockwise (CCW) operation input (reversible motors)

When the CCW operation input is turned ON, the motor shaft rotates counterclockwise. When turned OFF, the motor stops instantly. If the CW and CCW operation inputs are both turned ON at the same time, CW is given priority.

3) Brake release input (induction motors, reversible motors)

When the brake release input is turned ON, the electronic brake won't operate. If the CW or CCW input is turned OFF in this condition, the motor stops naturally after losing its inertia. If the brake release input is turned OFF, the electronic brake will operate. If the CW or CCW input is turned OFF in this condition, the motor stops instantly.

■Wiring connection cautions

- Use the shortest possible distance when wiring the motor and brake pack, and brake pack and external controller.
- Use wires with a cross-sectional area of at least 0.75mm for the motor wiring and AC power wiring.
- Don't bundle the motor wiring/AC power wiring (terminal Nos. 1, 2, 3, 9 and 10) with the signal wiring (terminal Nos. 4, 5, 6, 7, and 8). Install the two sets of wiring at least 10cm apart.
- Don't solder anything to the brake pack's terminal pins directly.
- Turn the power OFF before inserting the brake pack into the socket. Insert the brake pack securely.
- Always ground the terminal of pin No. 6. if motor operation will include instant stops.

Overview
Induction
Reversible
Electromagnetic brakes
Terminal boxes
Speed controller (Overview)
Unit type
Socket type
Speed controller (Induction)
Speed controller (Reversible)
Speed controller (Electro-magnetic brake)
Brake packs
Options
Technical Information
Overview
Dimensions
Panel display
Wiring diagram

Overview of brake packs (Wiring diagram)

■ Brake packs BASD

- 6~90W Induction motor(220~240V/50HZ) with lead wire & terminal box

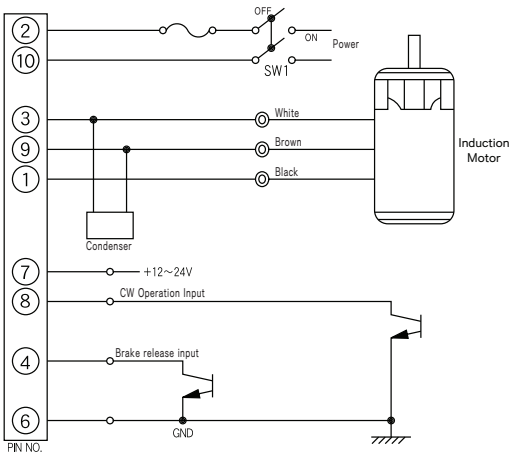

- 6~90W Reversible motor(220~240V/50HZ) with lead wire & terminal box

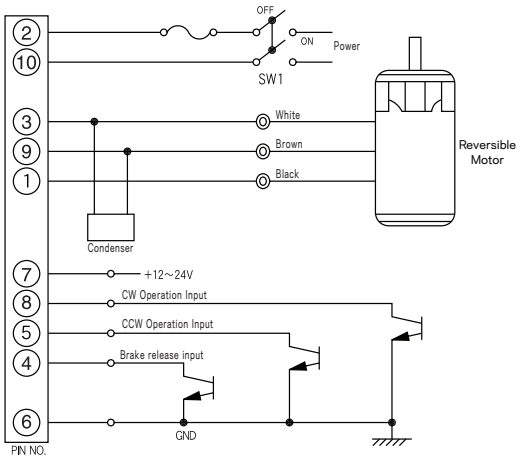

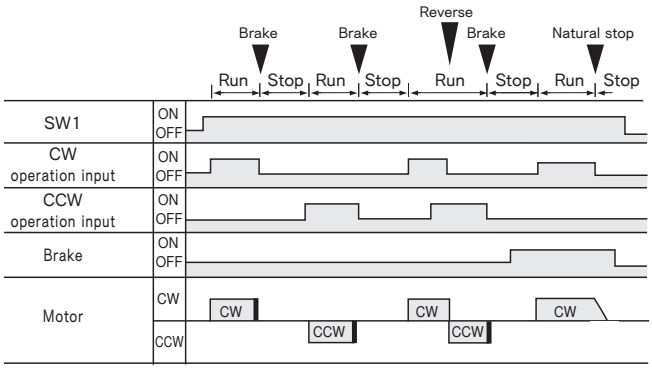

Options

Astero™

Option

Options. Mounting plate for motor & gear head

The mounting plate is the adapter used to secure the Astero gear motor to the floor or other surface parallel to the output shaft.
To attach the mounting plate and gear motor, use the bolts, nuts and washers provided with the gear head. No screws are provided for attaching the plate to your machinery, so should be obtained separately.

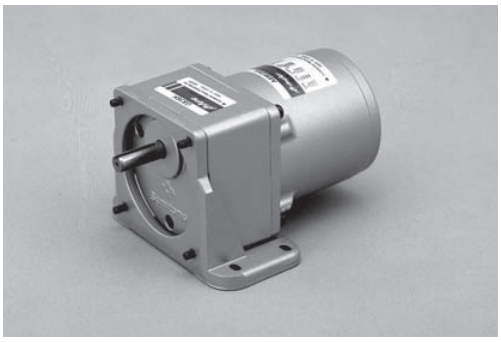

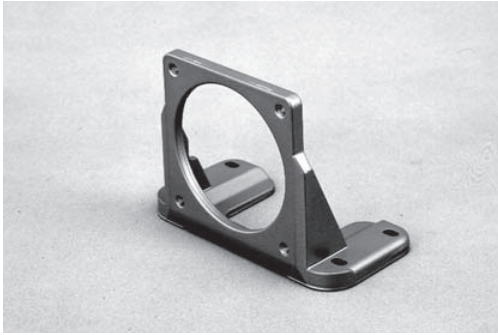

60mm sq. flange motor(6w) & gear head

Type	G 6 F M
Weight	4 5 g
Material	Aluminum

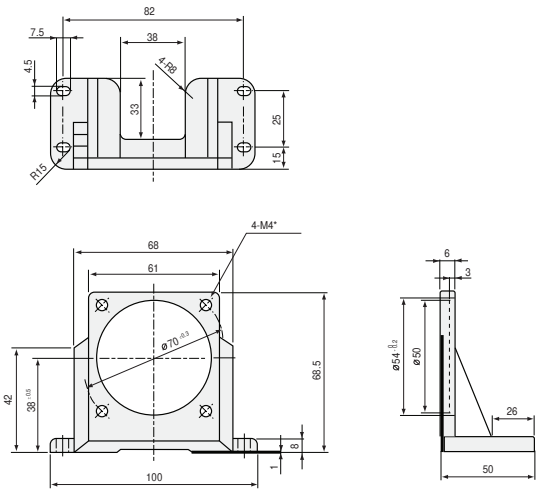

70mm sq. flange motor(15w) & gear head

Type	G 7 F M
Weight	7 5 g
Material	Aluminum

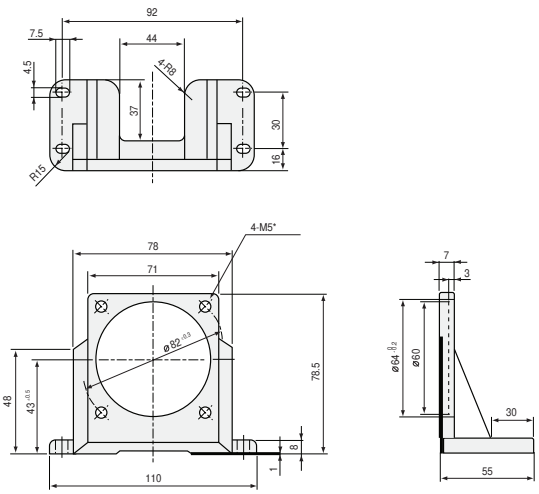

Options. Mounting plate for motor & gear head

80mm sq. flange motor(25w) & gear head

Type	G 8 F M
Weight	1 2 0 g
Material	Aluminum

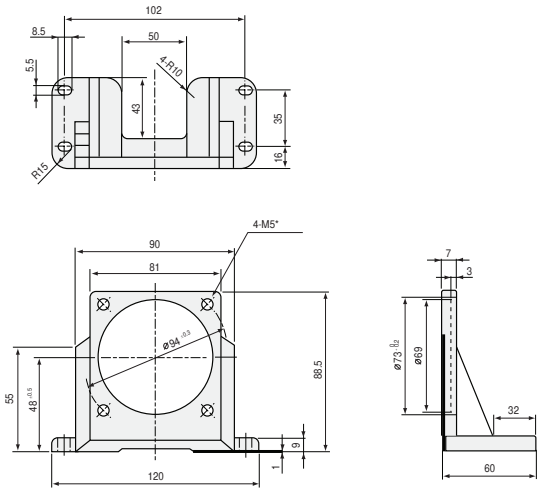

90mm sq. flange motor(40w) & gear head

Type	G 9 A F M
Weight	1 4 0 g
Material	Aluminum

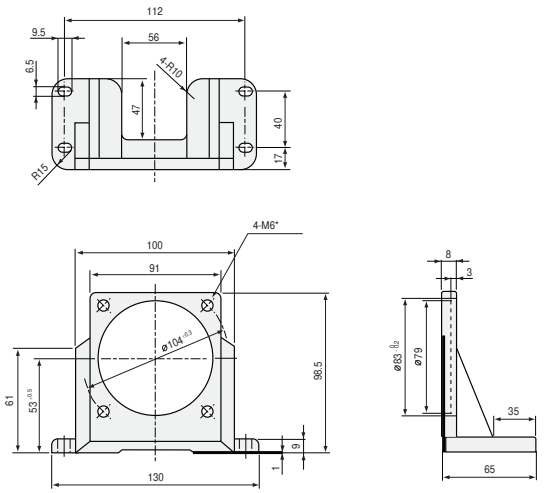

90mm sq. flange motor(60w,90w) & gear head

Type	G 9 B F M
Weight	2 7 0 g
Material	Aluminum

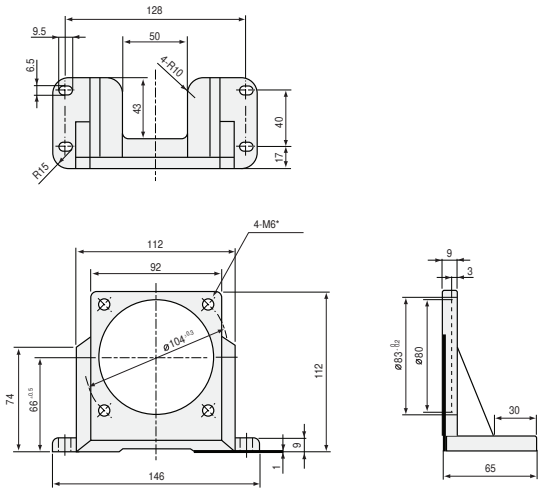

BIBUS

BIBUS s.r.o.
+420 547 125 300
www.bibus.cz

Option

Options. Extersion cable

Special extension cable used to connect unit-type speed controllers to the induction motors used with them.
The special 0.5 m wire that comes with the controller main unit can also be used to extend the range.

■Dimensions

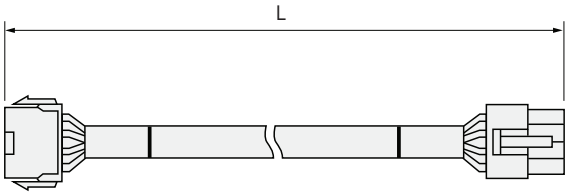

Type	L (Length)
E A W E 0 5	0 . 5 m
E A W E 1 0	1 . 0 m
E A W E 1 5	1 . 5 m
E A W E 2 0	2 . 0 m

Options. CR Circuits for surge voltage absorber

Options for socket-type speed controllers. Used to protect relay and switch contacts when using a speed controller for motor braking or operation direction switching.
See the socket-type speed controller wiring diagram for more information.

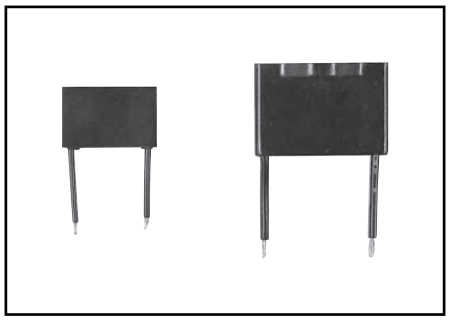

■Dimensions

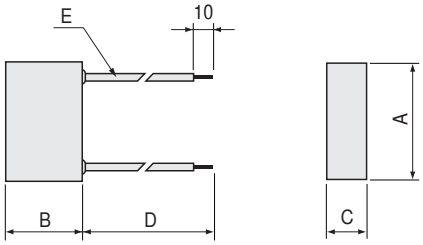

Type	Voltage	Resistance	Condenser	Dimension（m m）				E
				A	B	C	D	Lead wires
E A C R 2 5	AC250V	1 2 0 Ω	0 . 2 μ F	26	16.5	8.5	200	U L 1 0 0 7 AWG ＃ 2 2
E A C R 5 0	AC500V	1 2 0 Ω	0 . 2 μ F	36	25	16	200	U L 1 0 0 7 AWG ＃ 2 2

Options. External speed control switch

An option for socket-type speed controllers.
Since socket-type speed controllers come with an external speed control switch, this option is only needed for applications requiring more than one speed control switch, such as multiple-speed operation.

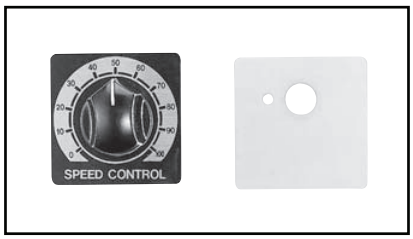

Type	Specification
E A V R 2 0	20kΩ,1/4W,B type

■Dimensions

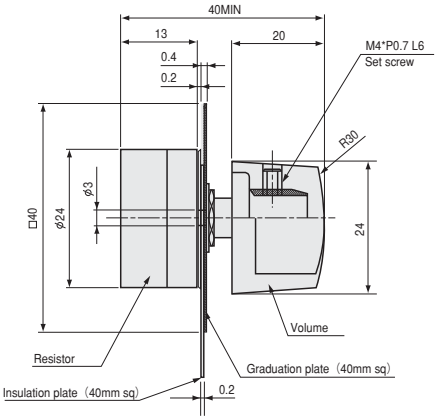

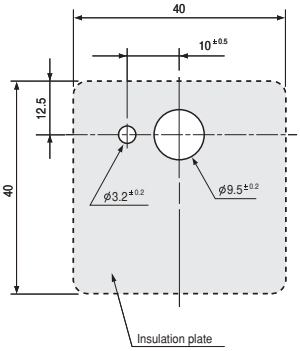

Options. External resistor for braking

An option for socket-type speed controllers.
Used for controller-driven instant braking. See the socket-type speed controller wiring diagram for more information.

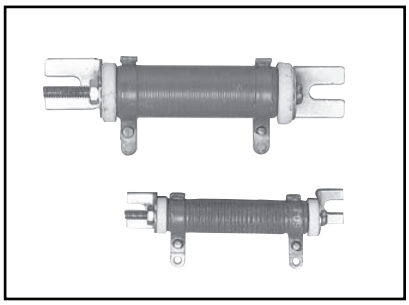

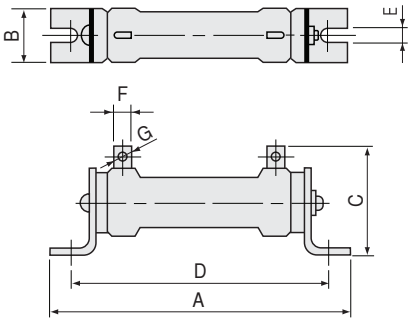

Type	Resistance (Ω)	Raiting power (W)	Dimension (mm)							Controller type	Time to use
			A	B	C	D	E	F	G		
E A B R 1 0 H 1 0	10	10	77	14	26	67	3.5	5	2.2	C A H 9 0 □	Braking

MEMO

BIBUS

BIBUS s.r.o.
+420 547 125 300
www.bibus.cz

Technical Information

∗Gear head and motor are sold separately.

Astero™

Technical Information: Motors

Technical Information: Gear Heads

Overview
Induction
Reversible
Electromagnetic brakes
Terminal boxes
Speed controller (Overview)
Unit type
Socket type
Speed controller (Induction)
Speed controller (Reversible)
Speed controller (Electro-magnetic brake)
Brake Packs
Options
Technical Information

Technical Information: Motors

1. Ratings

Motors are designed for a pre-determined temperature rise range. The operation limit guaranteed within this range is called the rating. Ratings are either continuous ratings or short-time ratings. Ratings determine the operation limit for a given torgue, as well as values such as voltage, current, motor speed and frequency. (These values are known as the rating torque, rated voltage, rated current, rated motor speed, and rated frequency.)

1) Continuous rating
A continuous rating specifies that the motor can operate continuously without problems, at the rating torque and within the specified temperature rise range.

2) Short-time rating
A short-time rating specifies that the motor can operate without problems for a specified amount of time at the rating torque and within the specified temperature rise range.

Table 1. Time ratings

Motor type	Time rating
Constant-speed	
Induction motor	Continuous
Reversible motor	Short-time (30 minutes)
Motor with electromagnetic brake	Single-phase: Short-time (30 minutes) 3-phase: Continuous
Variable-speed	
Induction motor	Continuous
Reversible motor	Short-time (30 minutes)
Motor with electromagnetic brake	Short-time (30 minutes)

2. Torque and motor speed

A motor's torque is the rotational force needed to turn its load. Torque is expressed in units of N•m or kgf•cm.

Fig1. Motor speed-Torque characteristics

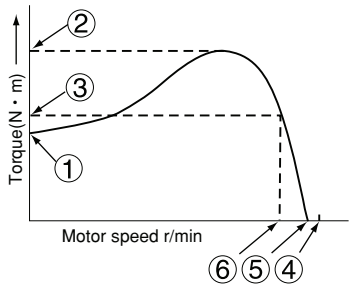

1) Starting torque (Fig.1-①)
The rotational force the motor generates at the instant it starts. Also called startup torque. If a load larger than this rotational force is applied to the motor, the motor can't operate.

2) Stopping torque (Fig.1-②)
The maximum rotational force the motor can generate. If a load larger than the stopping torque is applied to the motor during operation, the motor stops.

3) Rating torque (Fig.1-③)
The torque generated when a current of the rating voltage and frequency is applied to the motor, and the motor continually generates the rating output. The torque generated when the motor operates at the rating motor speed.

4) Synchronous motor speed (Fig.1-④)
The motor speed when the motor's slippage is 0. The synchronous motor speed, number of motor poles, and power frequency are related by the formula below.

$$N_S = \frac{120 f}{P} \text{ [r/min]}$$

Ns : Synchronous motor speed (r/min)
P : Number of motor poles
f : Power frequency (Hz)
120 : Constant

Example: When the power frequency is 60 Hz, and the number of motor poles is 4

$$N_S = \frac{120 \times 60}{4} = 1800 \text{ [r/min]}$$

5) No-load motor speed (Fig.1-⑤)
The motor speed when no load is applied. For induction motors and reversible motors, this value is about 20 to 80 r/min less than the synchronous motor speed.

6) Rated motor speed (Fig.1 -⑥)
The motor speed when the rated torque is applied to the motor and it generates the rated output. The optimum speed for operation.

7) Slippage
When a load is applied to the motor, the motor speed becomes lower than the synchronous motor speed. The slippage indicates how much the motor speed has dropped from the synchronous motor speed, relative to the value of the synchronous motor speed. It is expressed by the formula below.

Technical Information: Motors

$$S = \frac{N_S - N}{N_S} \text{ [r/min]} \quad \text{or} \quad N = N_S \times (1 - S) \text{ [r/min]}$$

Ns : Synchronous motor speed (r/min)
N : Motor speed with load (r/min)
S : Slippage

Example: When slippage (S) is 0.1 for a 4-pole, 60 Hz induction motor

$$N = \frac{120 \times 60}{4}(1 - S) = 1800 \times (1 - 0.1) = 1620 \text{ [r/min]}$$

8) Stored torque
The torque generated when an electromagnetic brake or simple built-in brake operates (engages) and the load is stored. Also known as static friction torque.

9) Allowable torque
The maximum torque that can be used when the motor operates. Determined by the rated torque of the motor itself, the temperature rise, and the torque of the combined gear heads.

10) Overrun
The amount of motor shaft rotation from the instant the motor's power is shut off until the motor comes to a complete stop. Expressed as an angle (number of rotations).

3. Ambient temperature

Motors should be used in an ambient temperature of -10 to +40℃. If the motor is used above the upper-limit ambient temperature, the temperature rise generated by motor operation will add to the ambient temperature, causing coil insulation deterioration and significantly reducing the life of the ball bearings. If used below the lower-limit ambient temperature, the viscosity of the gear head lubrication grease and ball bearing grease will increase, causing greater frictional torque and making the motor difficult or impossible to start.

4. Measuring the motor temperature rise

Attach a thermocouple to the center of the motor case, operate the motor and measure the temperature when it has become stable. The difference between this value and the ambient temperature is known as the temperature rise. Generally, the coil is the highest-temperature motor part. The coil's maximum allowable temperature is specified according to the type of insulation material used. The formula for calculating the coil temperature rise is given below.

$$\Delta T = \frac{R_2 - R_1}{R_1} \times (234.5 - T_1) - (Ta - T_1)$$

R_1: Coil resistance before temperature rise was measured
R_2: Coil resistance when temperature has become stable
T_1: Ambient temperature when R1 was measured
Ta: Ambient temperature when R2 was measured
234.5: Temperature coefficient of copper wire

Cautions
- The motor's temperature rise will increase if the motor is often started/stopped, its operation direction is often changed, or it is often stopped instantly using a brake pack or similar component.
- During motor operation, the surface temperature of the motor case becomes quite high, and in some cases it can reach nearly 90!!C. This temperature rise is normal. To avoid accidents,

Overview
Induction
Reversible
Electromagnetic brakes
Terminal boxes
Speed controller (Overview)
Unit type
Socket type
Speed controller (Induction)
Speed controller (Reversible)
Speed controller (Electro-magnetic brake)
Brake Packs
Options
Technical Information

Technical Information: Motors

5. Overheating protectors

Motors with UL or CE-mark certification come with equipment to protect against overheating when the motor becomes overloaded or stops unexpectedly during operation. Motors of □70, □80 and □90 mm attachment sizes come with thermal protectors. □60 mm motors come with impedance protection.

1) Motors with thermal protectors
A thermal protector (TP: a device to protect against excessive temperatures) is built into the motor's coil unit. Thermal protectors use a bimetallic strip to detect heat. If the coil reaches an abnormally high temperature, the circuit is released. The thermal protectors used in Sumitomo's motors are the auto-restore type that restore the circuit if the temperature subsequently drops back to within the normal range. Motors with built-in thermal protectors display 'TP' on the name plate. (Thermal protector operation temperatures: Release120 ±5℃, Restore77 ±5℃)

2) Motors with impedance protectiors
Motors with impedance protection have larger coil resistances and are designed so that if the motor becomes immobilized, the current (input) is limited to a low value so that the coil temperature doesn't rise above the maximum allowable value. The allowable temperature for an immobilized UL type A motor is 150℃ (Sumitomo's UL-certified motors are type A). Motors with impedance protectiors display 'ZP' on the name plate.

6. Making ground connections

For motors with lead wires or terminal boxes, connect the ground terminal and fixing bolt in the attachment hole near the ground display. When connecting the ground terminal, remove the paint on the housing surface under the fixing bolt. Note that the ground will be less effective if not enough paint is removed.

Fig 2. Ground connections

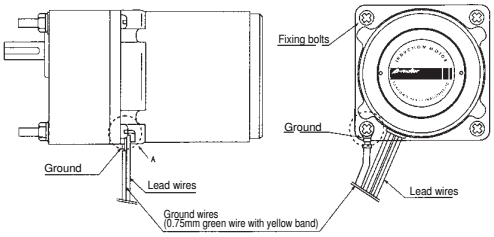

7. Compliance of Sumitomo products with standards in each country

EC directives, CE Marking

The CE Mark is placed on products that comply with EC directives. It certifies the product's quality and safety, to guarantee that the product can be freely distributed to any country in the EU (European Union).

Directives for mechanical products (EC directives)

There are three directives applying to normal mechanical products.

Table 2. EC directives

Description / EC directive	Applies to	Description of directive
Machinery Directive	Items assembled from parts and containing moving parts (mainly industrial machinery)	Specifies essential conditions for machinery safety. Machinery incorporating mainly electrical hazards must also comply with requirements for low voltage.
Low Voltage Directive	Products driven by a 50 to 1,000 VAC or 75 to 1,500 VDC power supply	Only products in compliance with standards may be sold.
Electromagnetic Compatibility Directive	All types of products that could generate signal interference (electromagnetic radiation), or with functions that could be interfered with ambient signals.	EMI: Must not generate electromagnetic interference to outside. EMS: Must be able to withstand electromagnetic interference from outside.

Technical Information: Motors

Compliance of Astero gear motors with EC directives and CE Marking

Astero gear motors are CE Mark-compliant, and comply with the EC directives pertaining to induction motors: The Machinery Directive (issued January 1995), and Low Voltage Directive (issued January 1997, CE Mark added). The Electromagnetic Compatibility Directive (issued January 1996) doesn't apply to induction motors.

CE Marking displayed on name plate

CE

UL (Underwriters Laboratories) standard

Underwriters Laboratories is a private US testing institute that conducts scientific studies, research and experimentation in the areas of safety, fires and disasters, and has created an institutional safety standard for hazard prevention. While UL certification is not required throughout the US, some states and cities do require it, and UL-standard products are more trusted by US consumers.

Differences of UL-standard products

- Terminal symbols
- UL mark on name plate
- Motors can only be manufactured or altered in certified plants.

8. Power requirements in each countries

Table 3 . Power requirements in different countries

Country/Area		Frequency	Voltage(1-phase)	Voltage(3-phase)
Japam		50Hz/60Hz	100V／200V	200V／400V
North America	America	60Hz	115V／230V	230V
	Canada	60Hz	120V／347V	208V／240V／600V
Asia	Korea	60Hz	110V／220V	220V／380V
	Taiwan	60Hz	110V／220V	200V／220V／380V
	Houg Kong	50Hz	200V／220V	346V／380V
	China	50Hz	220V	220V／380V
	Philippines	60Hz	220V	380V
	Thailand	50Hz	220V	220V／380V
	Singapore	50Hz	230V	415V
	Malaysia	50Hz	240V	415V
	Indonesia	50Hz	220V	380V
	India	50Hz	240V	240V／415V
	Bangladesh	50Hz	230V	400V
Oceania	Australia	50Hz	240V	415V
	Guam	60Hz	120V	240V／480V
	New Zealand	50Hz	230V	230V／415V
Europe	Austria	50Hz	230V	400V
	Belgium	50Hz	230V	400V
	Bulgaria	50Hz	220V	380V
	Denmark	50Hz	230V	400V
	Finland	50Hz	230V	400V
	France	50Hz	230V	400V
	Germany	50Hz	230V	400V
	Greece	50Hz	230V	400V
	Hungary	50Hz	220V	380V
	Italy	50Hz	220V	380V
	Luxembourg	50Hz	230V	400V
	Netheriands	50Hz	230V	400V
	Norway	50Hz	220V／230V	380V
	Portugal	50Hz	230V	400V／480V
	Romania	50Hz	220V	380V
	Spain	50Hz	127V／220V	220V／380V
	Sweden	50Hz	230V／400V	400V／690V
	Switzerland	50Hz	230V	400V
	United Kingdom	50Hz	230V	400V

Note:
The voltages above may vary in different regions or cities within the same country.
Single-phase 115 V is the standard voltage in the US and Canada, but 120 V is generally displayed.

Overview
Induction
Reversible
Electromagnetic brakes
Terminal boxes
Speed controller (Overview)
Unit type
Socket type
Speed controller (Induction)
Speed controller (Reversible)
Speed controller (Electro-magnetic brake)
Brake Packs
Options
Technical Information

Technical Information: Gear heads

9. Gear head size

Gear heads come in four sizes: □60, 70, 80 and 90 mm.

10. Reduction ratio

The ratio by which the gear head reduces the motor speed.
Example: If the motor's output speed (Nm) is 1,500 r/min, and the gear head's output speed (Ng) is 50 r/min, the speed reduction ratio (i) is 1,500/50 = 30. For compatibility with 50 and 60 Hz areas, two sets of gear head reduction ratios are available: 3, 5, 7.5, 12.5, 15... and 3.6, 6, 9, 15, 18... (1.2 times larger than the first set). The reason the second set of ratios are 1.2 times the first set is that a synchronous motor speed of 1,500 RPM in a 50 Hz area would be 1,800 RPM in a 60 Hz area, a ratio of 1.2.

Example: If a gear head output speed of 500 r/min is required, the following speed reduction ratio should be used:
In 50 Hz area: 3
In 60 Hz area: 3.6
Naturally, all gear heads can be used in both 50 and 60 Hz areas.

There are 24 reduction ratios (ranging from 3 to 200) for gear heads attached to motors. If you need a reduction ratio over 200, use an intermediate gear head with a speed reduction ratio of 10.

11. Maximum allowable torque

The maximum load torque that can be applied to the gear head. Determined by the mechanical strength of the gears, shaft, casing, bearings and other components used in the gear head, so varies according to the gear head size, reduction ratio and type. Fig.3 shows the relationship between the gear head's reduction ratio and maximum allowable torque.

Fig3. Maximum allowable torque of gear heads

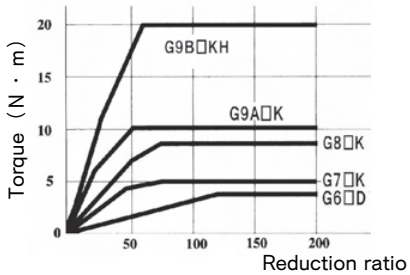

12. Service factor

Used when determining the gear head's life and radial load. See Table 4 for more information.
For example, with a uniform load for 8 hours a day, the service factor is 1.0, and the gear head's life is 5,000 hours.
Note: All Astero gear head models use ball bearings.

Table 4. Example service factors and loads

Load type	Load example	Service factor
Uniform load	Continuous load in one direction	1.0
Moderate shock load	Frequent starts/stops	1.5
Shock load	Instant changes of motor direction	2.0

13. Gear head transmission efficiency

When a gear head is connected to a motor, losses are generated by factors such as the heat, noise, vibrations and lubricant agitation generated by the gear head. The loss ratio subtracted from 100% is the gear head transmission efficiency. The transmission efficiency varies depending on the number of speed reduction gears in the gear head. In case of single reduction, the transmission efficiency is 90%, in case double reduction, it's 81%, and in case of triple reduction It's 73%. Table 5 shows the relationship between the speed reduction ratio and transmission efficiency.

Table 5. Gear head transmission efficiency

	3	3.6	5	6	7.5	9	10	12.5	15	18	20	25	30	36	40	50	60	75	90	100	120	150	180	200	Int. Gear heads
G6□D	81%										73%					66%									59%
G7□K																									
G8□K																									
G9A□K																									
G9B□KH																		59%							

Technical Information: Gear heads

14. Shaft radial load and thrust load

The shaft radial load is the load that operates orthogonally to the direction of the gear head's output shaft. The allowable shaft radial load is the maximum shaft radial load that can be applied to the gear head. The shaft radial load is expressed by the formula below.

$$Pr = P_{\ell}\ Cf \times S.F. / R\ [N]$$

Pr : Shaft radial load (N)
Pl : Actual torque transmitted by gear head's output shaft (N!!m)
Cf : Load connection factor (see Table 6)
S.F. : Service factor (see Table 4)
R : Radius of gear, pulley or other drive component (m)

Table 6. Load connection factor(Cf)

Drive method	Cf
Chain, sprocket	1.0
Gear	1.25
Pulley	1.5

Fig.4 Gear head

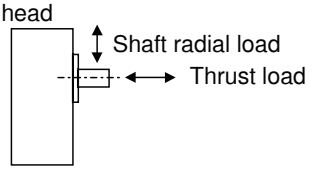

Note that if the gear head is used in excess of the shaft radial load allowable value shown in Table 7, the bearings could quickly become damaged, the output shaft could bend, and fatigue damage could result from repeated loads. When attaching gears that create thrust load (such as helical gears) on gear head output shaft, make sure the shaft radial load and thrust load don't exceed their allowable values. Table 7 shows the allowable values for radial and thrust loads.

Table 7. Allowable radial loads, allowable thrust loads

Model	Reduction ratio	Max allowable torque(N・m)	Allowable radial load(N)	Allowable thrust load(N)
G6□D	3～18	0.10～0.60	60	30
	20～200	0.60～2.90	150	
G7□K	3～18	0.30～1.80	100	40
	20～200	2.00～4.90	200	
G8□K	3～18	0.20～2.50	120	50
	20～200	2.90～7.80	240	
G9A□K	3～18	0.40～3.90	290	100
	20～200	3.90～9.80	360	
G9B□KH	3～10	0.80～3.90	440	150
	12.5～20	3.90～7.80	510	
	25～60	4.90～19.60	590	
	75～200			

15. Combining motors and gear heads

The number after the first letter of the model name indicates the size. Only motors and gear heads for which this number is the same can be combined. The last letter of the model name indicates the heat treatment. Only motors and gear heads for which this letter is the same

Example: Motor and gear head combination

a) Motor A8M25A — Gear head G8□K — Size

□ indicates the reduction ratio.

b) Motor A9M60AH — Gear head G9B□KH — Size — Heat treatment symbol

16. Combining motors and intermediate gear heads

By using an intermediate gear head between the motor and gear head, the gear head's reduction ratio is increased by a factor of 10. However, even though the speed reduction ratio is increased, the gear head's allowable torque is a constant value that can't be exceeded.

Overview
Induction
Reversible
Electromagnetic brakes
Terminal boxes
Speed controller (Overview)
Unit type
Socket type
Speed controller (Induction)
Speed controller (Reversible)
Speed controller (Electro-magnetic brake)
Brake Packs
Options
Technical Information

Technical Information: Gear Heads

17. Gear head shaft rotation speed and direction

The rotation speed when a motor and gear head are combined without an intermediate gear head is expressed by the formula below.

$$N_g = N_m / i \quad [r/min]$$

Ng : Gear head's rotation speed (r/min)
Nm : Motor speed (r/min)
i : Reduction ratio

The rotation direction of the gear head's output shaft can be the same direction as the motor shaft, or the opposite direction, depending on the reduction ratio. See Table 8 for more information. For an intermediate gear head, the rotation direction is the same as the motor shaft's rotation direction.

Table 8 . Rotation direction of the gear head's output

	3	3.6	5	6	7.5	9	10	12.5	15	18	20	25	30	36	40	50	60	75	90	100	120	150	180	200
G 6 □ D																								
G7□ K																								
G8□ K																								
G9A □ K																								
G9B □ KH																								

: Same direction as motor shaft : Opposite direction of motor shaft

18. Attaching a motor and gear head

To attach a motor and gear head, align the contact surface as shown in Fig5, and turn the gear head gradually.
When making the attachment, don't apply excessive force to the motor shaft, or knock the motor shaft on the inside of the gear head. The gears could be damaged, causing abnormal noise and lowering the product life.

Fig 5. Attaching a motor and gear head

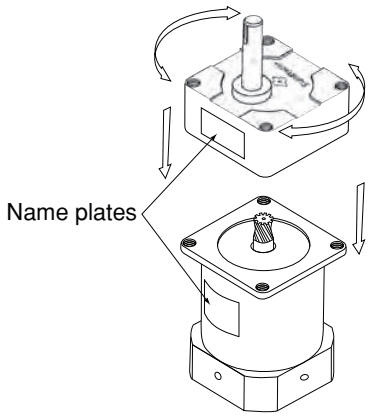

19. Set screw

Model	Reduction ratio	Set screw size
G6□D	3～ 18	M4 (P0.7) Length 50mm
	20～200	M4 (P0.7) Length 60mm
G6×H10	10	M4 (P0.7) Length 90mm
G7□K	3～ 18	M5 (P0.8) Length 55mm
	20～200	M5 (P0.8) Length 65mm
G7×H10	10	M5 (P0.8) Length100mm
G8□K	3～ 18	M5 (P0.8) Length 55mm
	20～200	M5 (P0.8) Length 65mm
G8×H10	10	M5 (P0.8) Length100mm
G9A□K	3～ 18	M6 (P1.0) Length 75mm
	20～200	M6 (P1.0) Length 85mm
G9A×H10	10	M6 (P1.0) Length122mm
G9B□K H	3～200	M6 (P1.0) Length 95mm
G9B×H10H	10	M6 (P1.0) Length130mm

20. Affixing a load transmission mechanism

To affix a load transmission mechanism onto the gear head output shaft, a D-cut has been provided for □60 mm flange sizes, and a key way has been provided for other sizes. For a D-cut shaft, affix the load transmission mechanism using bolts.
For a key way shaft, cut another key way on the load transmission mechanism, and use the key provided to affix the mechanism. Avoid knocking the components when affixing the transmission mechanism to the gear head shaft. The gear head could get damaged, shortening the product life.

Worldwide Sumitomo Network

U.S.A.
Sumitomo Machinery Corporation of America
4200 Holland Blvd.,
Chesapeake, VA 23323
Tel : (1)757-485-3355
Fax: (1)757-487-3193

Canada
SM-Cyclo of Canada, Ltd.
870 Equestrian Court Oakville,
Ontario, Canada L6L 6L7
Tel : (1)905-469-1050
Fax: (1)905-469-1055

Mexico
SM-Cyclo De Mexico, S.A. de C.V.
Calle "C" No. 505A Parque Industrial
Almacentro Apodaca, N. L., Mexico 66600
Tel : (52)81-8369-3697
Fax: (52)81-8369-3699

Brazil
SM-Cyclo Reductores Do Brasil Ltda.
Av. Fagundes Filho, 191 Metro Sao Judas
Edificio Houston-Sala H123 Sao Paulo-SP
Brazil 04304-010
Tel : (55)11-5585-3600
Fax: (55)11-5585-9990

Chile
SM-Cyclo De Chile, Ltda.
San Pablo Ave, 3507 Quinta Normal,
Santiago, Chile
Tel : (56)2-786-6963
Fax: (56)2-786-6964

Argentina
SM-Cyclo De Argentina S.A.
Montes de Oca #6719, (B1606BMG) Munro,
Buenos Aires, Argentina
Tel : (54)11-4765-5288
Fax: (54)11-4765-5517

United Kingdom
Sumitomo (SHI) Cyclo Drive Europe, Ltd.
Marfleet Kingston upon Hull HU9 5RA,
United Kingdom
Tel : (44)1482-788022
Fax: (44)1482-713205

SM-Cyclo U.K. Ltd.
Marfleet Kingston Upon Hull HU9 5RA,
United Kingdom
Tel : (44)1482-790340
Fax: (44)1482-790321

France
SM-Cyclo France E.U.R.L.
65/75 Avenue Jean Mermoz
F-93126 La Courneuve France
Tel : (33)149-929494
Fax: (33)149-929490

Italy
SM-Cyclo Italy Srl.
Via dell' Artigianato 231-20010
Cornaredo (Mi), Italy
Tel : (39)02-9356-2121
Fax: (39)02-9356-9893

Netherlands
SM-Cyclo Benelux BV
Den Engelsman 16D NL-6026 RB
Maarheeze The Netherlands
Tel : (31)495599777
Fax: (31)495593177

Sweden
SM-Cyclo Scandinavia AB
Företagsvägen 30A S-232 37
Arlöv Sweden
Tel : (46)40430220
Fax: (46)40431001

Spain
SM-Cyclo Iberia,S.L.
C/Landabarri N°4 Escalera 1, 2°izqda Leioa
48940 Vizcaya Spain
Tel : (34)944-805 389
Fax: (34)944-801 550

Germany
Sumitomo (SHI) Cyclo Drive Germany, GmbH
CyclostraBe 92
D-85229 Markt Indersdorf
Tel : (49)8136-66-0
Fax: (49)8136-5771

Austria
SCG Branch Austria Office
Gruentaler straße, 30a A-4028 Linz, Austria
Tel : (43)732-330 958
Fax: (43)732-331 978

China
Sumitomo (SHI) Cyclo Drive China, Ltd.
26F, Raffles City, No.268 Xizang
Road Central, Shanghai, 200001 China
Tel : (86)21-6340-4000
Fax: (86)21-6340-3673

Hong Kong
SM-Cyclo of Hong Kong Co., Ltd.
Unit 1802, 18/F., Park Building, 476
Castle Peak Road, Kowloon, Hong Kong
Tel : (852)3529-2093
Fax: (852)2460-1882

Singapore
Sumitomo (SHI) Cyclo Drive
Asia Pacific Pte. Ltd.
No.36 Tuas South Street 3,
Singapore 638031
Tel : (65)6863-2238
Fax: (65)6863-4238

Malaysia
SM-Cyclo of Malaysia Sdn. Bhd.
NO.2, Jalan BP 4/1,
Bandar Bukit Puchong, 47100 Puchong,
Selangor Darul Ehsan, Malaysia.
Tel : (60)3-80612909
Fax: (60)3-80613909

Thailand
SM-Cyclo of Thailand Co., Ltd.
195, Empire Tower
Unit 1504, 15th Floor
South Sathorn Road, Yannawa Sathorn
Bangkok 10120, Thailand
Tel : (66)2-670-0998
Fax: (66)2-670-0999

Vietnam
Representative Office
4th Floor, 99 Nguyen Thi Minh Khai St.
Ward Ben Thanh, District 1, HCM City, Vietnam
Tel : (84)8-925-6504
Fax: (84)8-925-6505

Australia
SM-Cyclo of Australia Pty., Ltd.
9 Holbech Rd., Arndell Park, NSW, 2148
Tel : (61)2-8811-6555
Fax: (61)2-8811-6500

Philippines
Representative Office
Unit 23E Burgundy Corporate Tower
252 Sen. Gil Puyat Ave. Makati City
Tel : (63)2-888-5866
Fax: (63)2-843-0021

India
SCA Liaison Office
759/17, Ramkripa Apartment, Flat No.2,
First Floor Capt. A. Ranade Path,
Deccan Gymkhana, Pune 411004,
Maharashra,India
Tel : (91)20-2565-3760
Fax: (91)20-2565-3755

Taiwan
Tatung SM-Cyclo Co., Ltd.
22 Chungshan N. Road.,
3rd Sec. Taipei,
Taiwan, 104 R.O.C.
Tel : (886)2-8676-1382
Fax: (886)2-8676-2285

Korea
SM-Cyclo of Korea Co., Ltd.
Royal Bldg. 9F Rm. 913,
5 Dangju-dong Chongro-ku,
Seoul,
Korea 110-721
Tel : (82)2-730-0151
Fax: (82)2-730-0156

Japan
Sumitomo Heavy Industries, Ltd.
9-11, Kitashinagawa 5-Chome
Shinagawa-Ku, Tokyo 141-8686, Japan
Tel : (81)3-5488-8363
Fax: (81)3-5488-8365

CW11

Sumitomo Drive Technologies®

ASTERO® 6 ~ 90 w

Gear Motors & Controllers

Sumitomo Heavy Industries, Ltd.

No.E0201E-2.0
2005.6