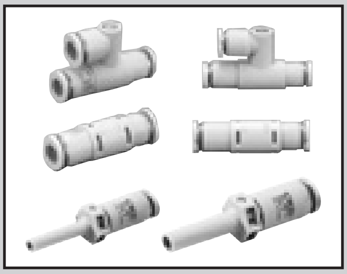

Quick exhaust valve with push-in fitting

QEL Series

● Piping bore size: ø4, ø6

JIS symbol

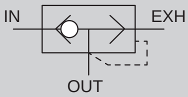

Features

- ● Compact, space saving
  Inline has ø4/ø6 push-in fittings built in
  Atmosphere release type and type with exhaust port fitting are available
  Plugs can be attached directly to the actuator as an effective countermeasure for condensation due to adiabatic expansion
- ● Ozone resistant materials as standard
  Ozone-proof materials for degradation prevention are used as standard for the valve
- ● Ecological products
  All substances which adversely affect the global environment have been eliminated from the materials
  RoHS2 Directive compliant product

Specifications

1 MPa ≈ 145.0 psi, 1 MPa = 10 bar

Model No. / Item		QEL-H44	QEL-H44-S	QEL-44P-S	QEL-H66	QEL-H66-S	QEL-66P-S
Working fluid		Compressed air					
Max. working pressure MPa		0.7 (≈101 psi, 7 bar)					
Min. working pressure MPa		0.1 (≈15 psi, 1 bar)					
Min. working pressure MPa		0.05 (≈8 psi, 1 bar)					
Proof pressure (at room temperature) MPa		1.35 (≈195 psi, 13 bar)					
Operating temperature °C		5 (41°F) to 60 (140°F) (no freezing)					
Port size	IN	ø4	ø4	ø4	ø6	ø6	ø6
	OUT	ø4	ø4	ø4 plug	ø6	ø6	ø6 plug
	EXH	ø4	Atmospheric release	Atmospheric release	ø6	Atmospheric release	Atmospheric release
Product weight g		5.2	3.3	2.3	7.6	4.9	3.9
Mounting orientation		Unrestricted					
Effective cross-sectional area	IN→OUT mm^2	1.8		1.5	4		3
	OUT→EXH mm^2	1.8		1.5	4		3

How to order

QEL - H44 - S

Model No.

Ⓐ Port size

Ⓑ Option

Code	Description
Ⓐ Port size	
H44	ø4
H66	ø6
44P	ø4 plug
66P	ø6 plug
Ⓑ Option	
Blank	With exhaust port fitting
S	Atmosphere release

*1: When A is "44P" or "66P", B "Blank" cannot be selected.

Internal structure and parts list

● Atmosphere release

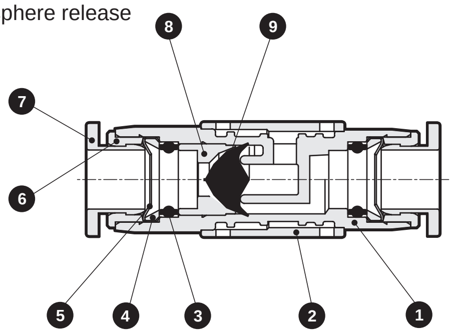

No.	Part name	Material
1	Resin body	Polybutylene terephthalate
2	Exhaust cover	Polybutylene terephthalate
3	Elastic sleeve	Nitrile rubber
4	Lock ring	Copper alloy (with electroless nickeling)
5	Lock claw	Stainless steel
6	Guide ring	Copper alloy (with electroless nickeling)
7	Release ring	Acetal resin
8	Valving element stopper	Copper alloy (with electroless nickeling)
9	Valving element	Hydrogenated nitrile rubber

● Type with exhaust port fitting

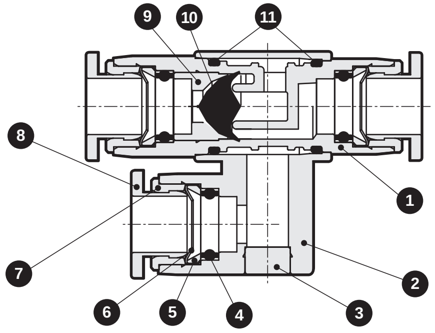

No.	Part name	Material
1	Resin body	Polybutylene terephthalate
2	Exhaust fitting body	Polybutylene terephthalate
3	Plug	Copper alloy (with electroless nickeling)
4	Elastic sleeve	Nitrile rubber
5	Lock ring	Copper alloy (with electroless nickeling)
6	Lock claw	Stainless steel
7	Guide ring	Copper alloy (with electroless nickeling)
8	Release ring	Acetal resin
9	Valving element stopper	Copper alloy (with electroless nickeling)
10	Valving element	Hydrogenated nitrile rubber
11	O-ring	Nitrile rubber

● Plug

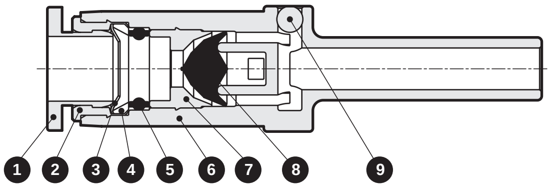

No.	Part name	Material
1	Release ring	Acetal resin
2	Guide ring	Copper alloy (with electroless nickeling)
3	Lock claw	Stainless steel
4	Lock ring	Copper alloy (with electroless nickeling)
5	Elastic sleeve	Nitrile rubber
6	Resin body	Polybutylene terephthalate
7	Valve body holder	Aluminum
8	Valving element	Hydrogenated nitrile rubber
9	Steel ball	Stainless steel

Dimensions

● Atmosphere release

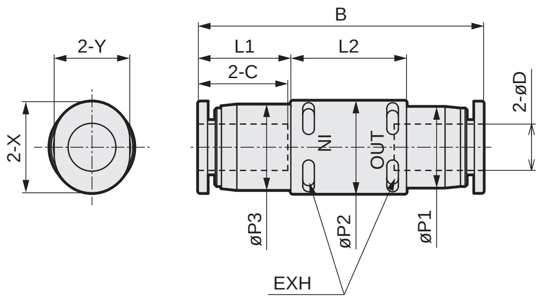

● With exhaust port fitting

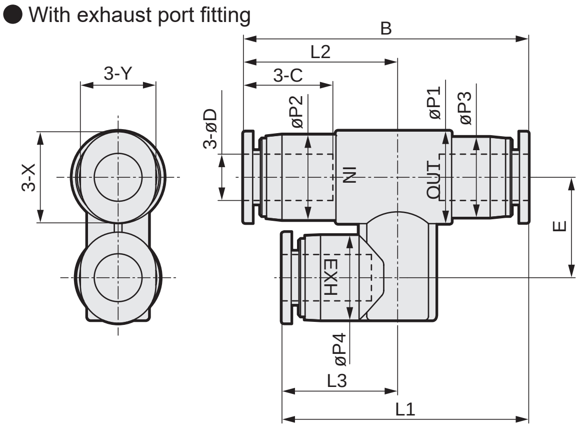

Code Model No.	øD Compatible tube O.D.	B	L1	L2	L3	øP1	øP2	øP3	øP4	C	E	X	Y
QEL-H44	ø4	35.2	30.5	18.8	14.1	10	9	8.4	9	11.3	11	9.8	7.8
QEL-H66	ø6	37.4	32.4	20.2	15.2	12	11	10.4	11	11.8	13	11.8	9.8
QEL-H44-S	ø4	35.2	11.3	15	−	8.4	10	9	−	11.3	−	9.8	7.8
QEL-H66-S	ø6	37.4	12.2	15	−	10.4	12	11	−	11.8	−	11.8	9.8

● Plug

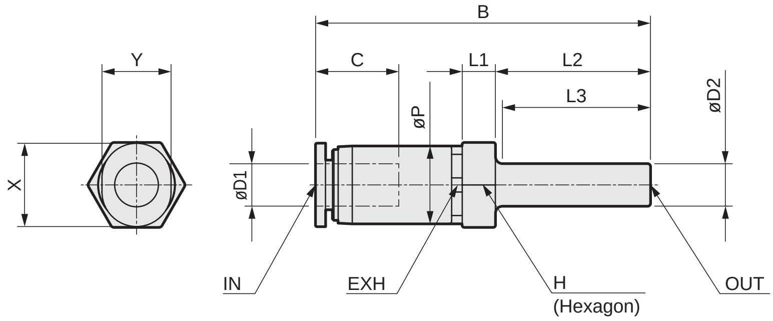

Code Model No.	øD1 Compatible tube O.D.	øD2 Fitting port size	B	L1	L2	L3	øP	C	H (Hexagon)	X	Y
QEL-44P-S	ø4	ø4	41.3	4.1	19	18.2	9	11.3	10	9.8	7.8
QEL-66P-S	ø6	ø6	47.5	4.7	22	21	11	11.8	12	11.8	9.8

Safety precautions

- Always use within the product specifications.
- This product is used with compressed air. Do not use this unit with other fluids.
- Securely insert the tube completely to the end, and make sure that the tube cannot be pulled out.
- Always provide differential pressure when using as a shuttle valve. The product could malfunction if there is no differential pressure.
- Securely insert the plug, and check that the plug section is not dislocated. If the plug is not fully inserted, it could be dislocated or air could leak.
- Make sure that there is no torsion, tension or moment load applied to the inserted state.
- Do not apply tension to the piping tubes, etc.
- Stop air flow and confirm that there is no residual pressure before replacing the tube.