WOOD INDUSTRY

Wood lifting systems

JOULIN

A brand by Piab Group

Stacking – Destacking systems
for all handling in wood industry

JOULIN - A brand by Piab Group:
Pioneering Vacuum Handling Solutions.

JOULIN – A brand by Piab Group, renowned specialist in vacuum handling solutions, has **over 60 years of experience in the wood industry**, making us a leader in developing innovative gantry robots for wood handling.

Our advanced systems are **designed to optimize the handling of lumber** and other wood materials, offering unmatched **efficiency and precision** in various industrial applications.

Our gantry robots, equipped with high-quality heavy duty, dust tolerant foam vacuum grippers, are engineered to handle complex tasks, whether you are **picking complete layers, partial layers, single parts or mixed parts**.

JOULIN's commitment to **continuous innovation and technical excellence** is reflected in its robust product portfolio, which includes customized gantry robot solutions tailored to meet the specific needs of the wood industry.

With **engineering and production facilities in France and USA**, see for yourself why businesses around the world trust **JOULIN** for their lumber handling projects.

JOULIN
A brand by Piab Group

Standard range

For more than 60 years JOULIN has supplied the wood industries with lifters.

Our range of standard gantry robots equipped with check valve technology allows you **to pick up all products**, partial layers, complete layers, random lengths and widths **without adjustment** using the same grippers.

All the models can be supplied complete turnkey or with different degrees of completion **integrated in your new or existing line**.

Gantry robot 500 t on mobile framework
Maximum capacity 500kg up to 7 cycles per minute

In detail

Grippers equipped with **patented Wave System™** (energy savings and not sensitive to dust, splinters, ...)

Grippers available in **aluminum or steel**

Traversing movement with belt drive for high speed and acceleration

Frequency drive with encoders for speed and optimizing movements

Very **low and easy maintenance**

Smart Control: Allows adjustment and vision of all parameters of the lifters. User friendly user interface with **touch screen**

Up to **5 axis**

Telescopic columns (low roof or ceiling)

Many options available

Radio control available

All our gantry robots are manufactured using high quality, internationally-known brand components

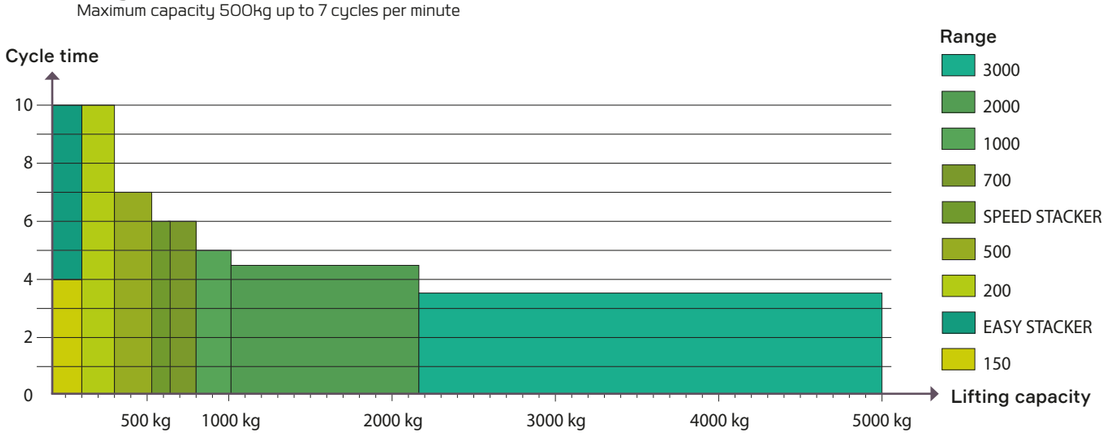

150

Maximum capacity 150 kg
Up to 4 cycles per minute

EASY STACKER

Maximum capacity 150 kg
Up to 10 cycles per minute

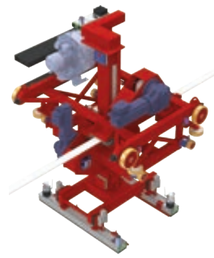

200

Maximum capacity 200 kg
Up to 10 cycles per minute

500

Maximum capacity 500 kg
Up to 7 cycles per minute

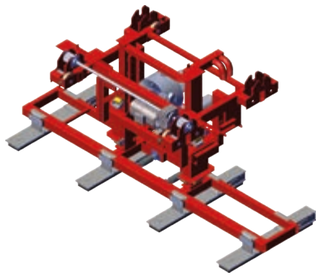

700

Maximum capacity 700 kg
Up to 6 cycles per minute

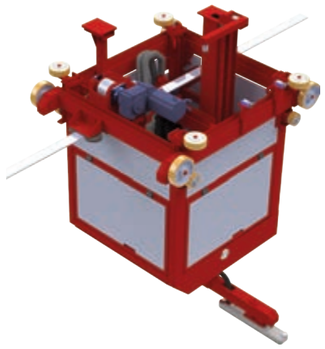

SPEED STACKER

Maximum capacity 600 kg
Up to 7 cycles per minute

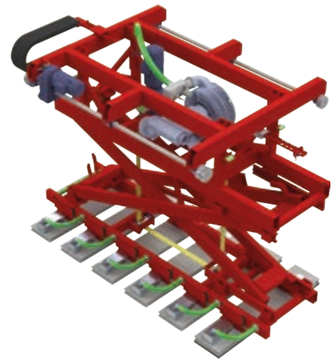

1000 CS

Maximum capacity 1000 kg
Up to 4,5 cycles per minute

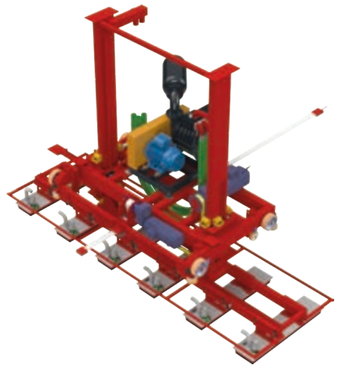

2000

Maximum capacity 2000 kg
Up to 4,5 cycles per minute

3000

Maximum capacity 5000 kg
Up to 3,5 cycles per minute

5 levels of **equipment**

JOULIN offers **5 levels** of equipment to fit all your needs.

1- GRIPPERS
2- GRIPPERS AND FRAME
3- GANTRY ROBOT
4- COMPLETE GANTRY ROBOT
5- COMPLETE GANTRY ROBOT WITH CONTROL BOX

Grippers

Level 1

Available Options

- **Flow Reverser** for quick release (light products such as slip sheets)
- **Blow off** (light products such as slip sheets)
- Venturi (ejectors)
- Our grippers include patented **Wave System™** **GripTech™**

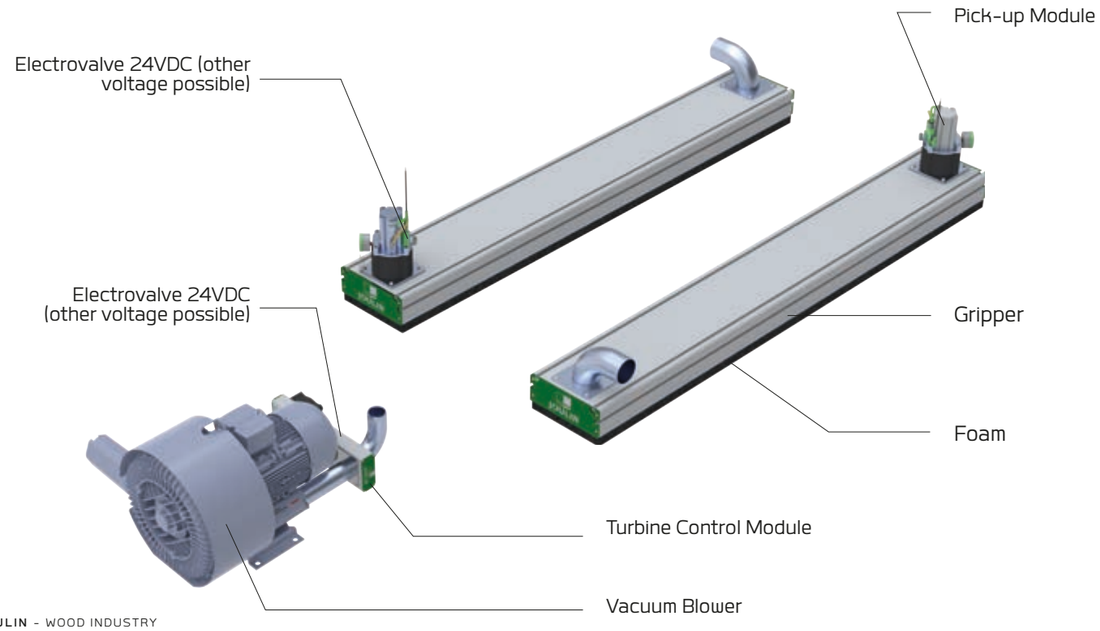

Grippers and frame

Level 2

Available Options

- **Steel or aluminum**
- Single to multiple grippers
- **Different models of attachments**; for robot or lifter
- Electrical switches and valves connected to a junction box
- Fieldbus
- Manual or powered horizontal adjustment of the gripper position

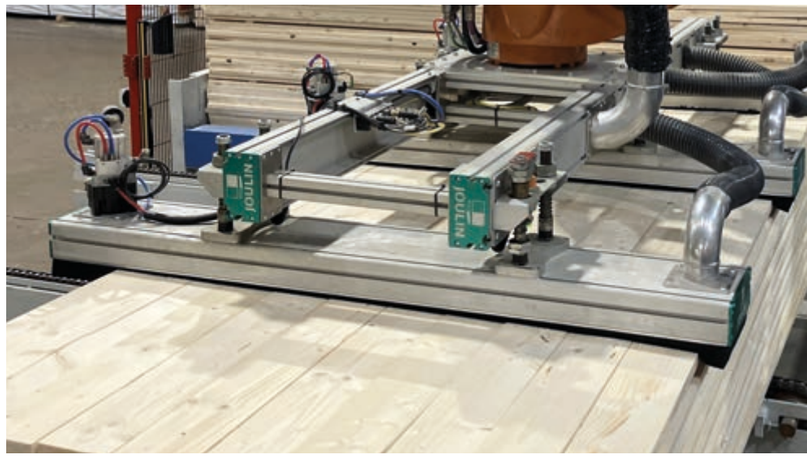

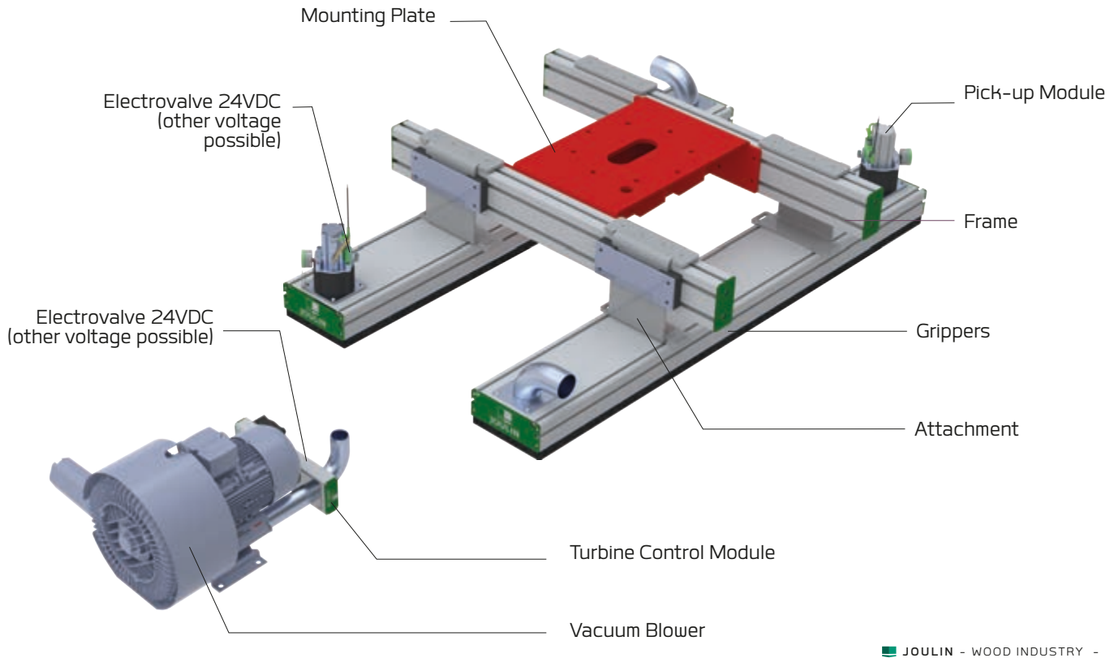

Gantry robot

Level 3

Available Options

- From standard to special models
- **Traversing movement with belt drive** for high speed and acceleration
- Electrical switches and valves **connected to a junction box**
- **Fieldbus**
- **Single to multiple grippers**
- **Rotation** of the grippers
- Telescopic columns (low roof or ceiling)
- Grippers in **steel or aluminum**

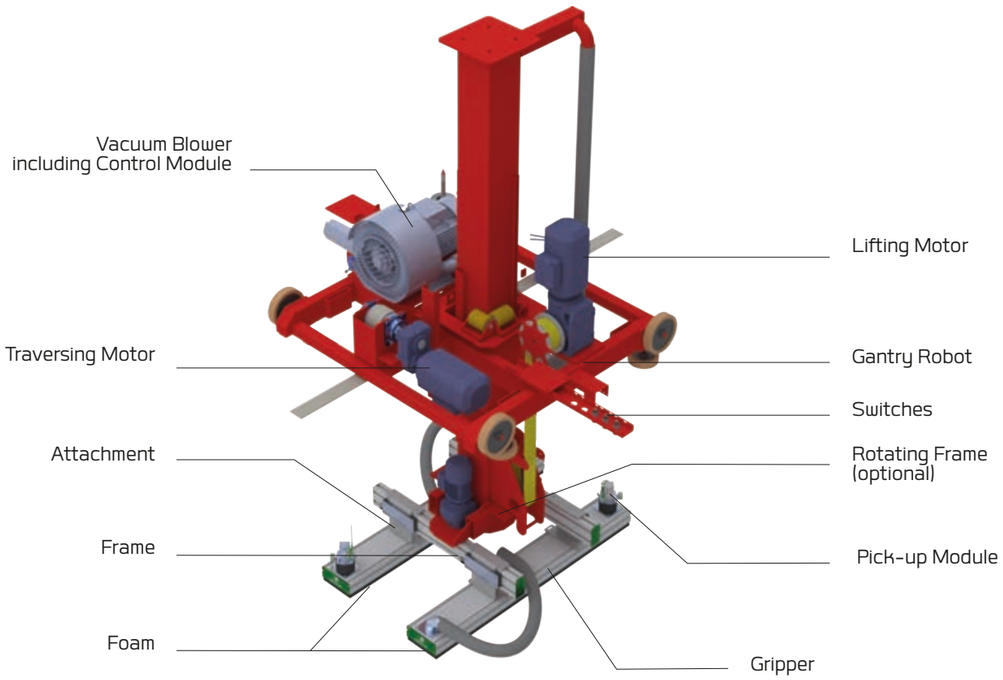

Complete gantry robot

Level 4

Available Options

- **Fixed or mobile framework**
- From standard to special models
- **Traversing movement with belt drive** for high speed and acceleration
- Electrical switches and valves **connected to a junction box**
- **Fieldbus**
- **Rotation** of the grippers
- Telescopic columns (low roof or ceiling)
- Grippers in **steel or aluminum**

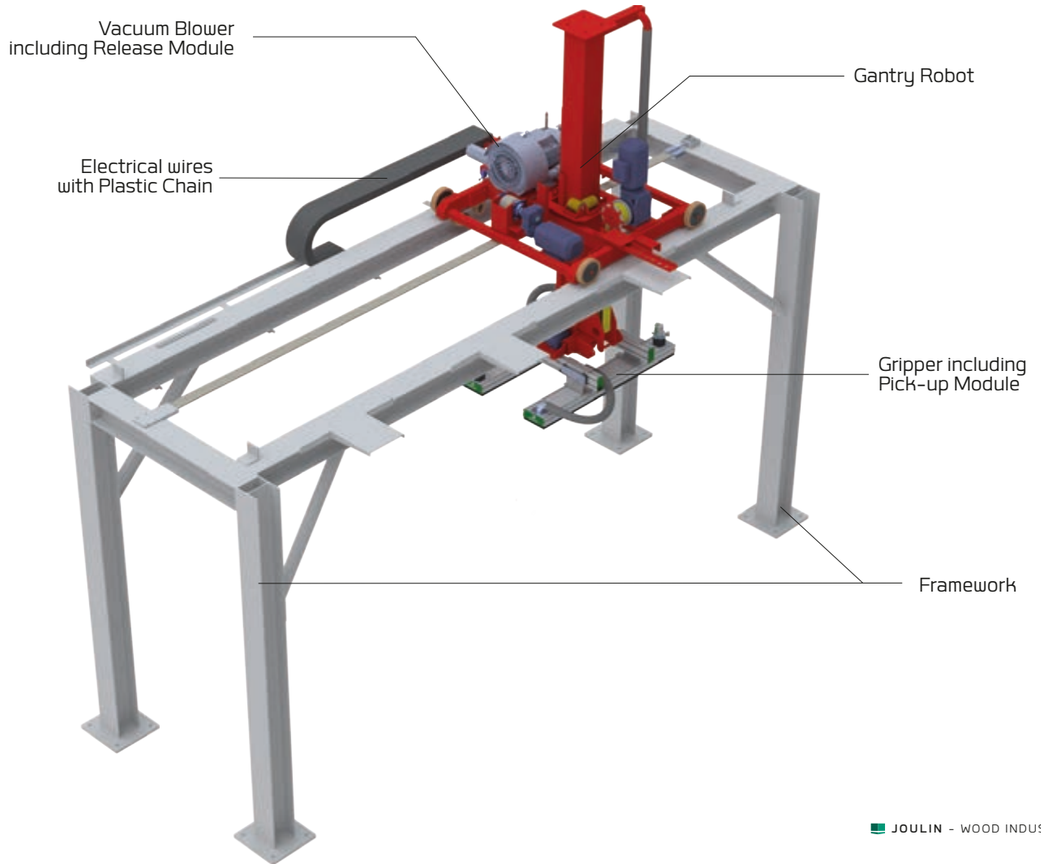

Complete gantry robot with control box

Level 5

Available Options

- Fixed or mobile framework
- **Frequency drive with encoders** for speed and optimizing movements
- **Traversing movement with belt drive** for high speed and acceleration
- Rotation of the grippers
- Telescopic columns (low roof or ceiling)
- Grippers in **steel or aluminum**
- **Up to 5 axis**
- Smart Control; allows adjustment and vision of all parameters of the lifters
- **Radio Control**

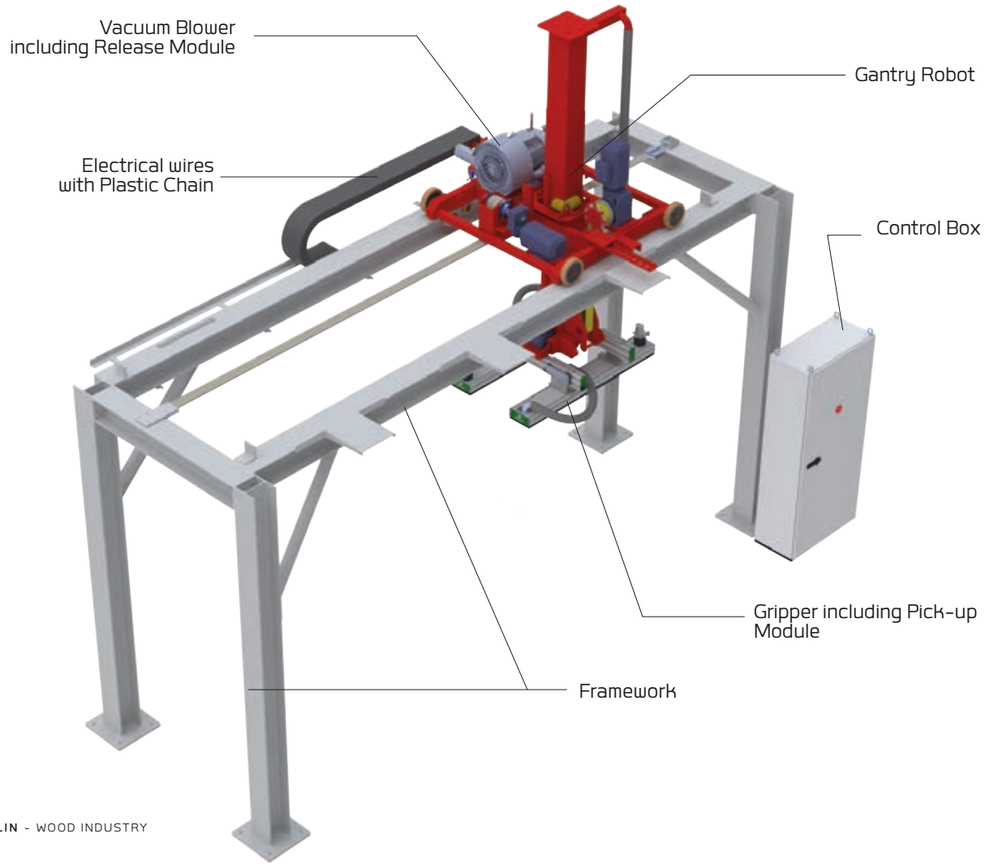

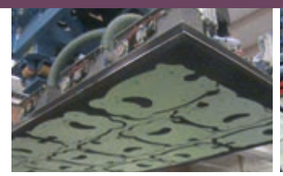

From the single gripper to the complete turnkey gantry robot

From the gripper ...

The patented check valve design has tolerance built in to allow dust particles to pass through the gripper :

- Rough, dry or green lumber,
- Molded parts,
- Complete house wall panels,
- Pallets,
- Heavy beams, ...

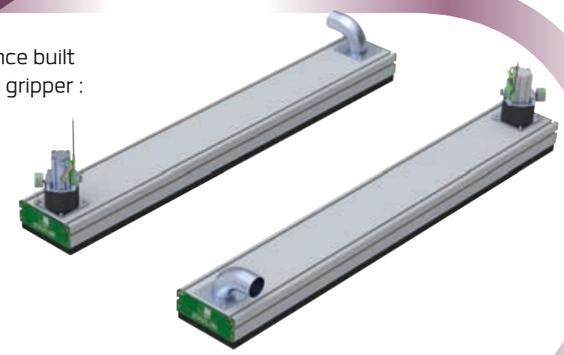

... to the frame...

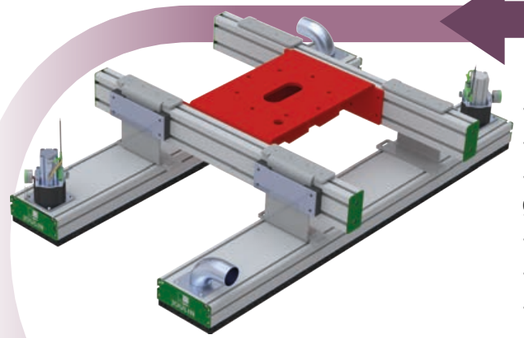

- As narrow **as 20 mm products**,
- Wide range of standard products,
- Easy and inexpensive to manufacture custom grippers to fit your needs,
- Many options available,
- Attachments to fit your robot or lifter,
- Short delivery time

... to complete gantry robot

Lifting capacities **up to 5000 kg**

State of the art controls with custom programs and interactive touch screen panels.

Many configurations and options to fit your application up to the complete turnkey gantry robot installed by our technicians.

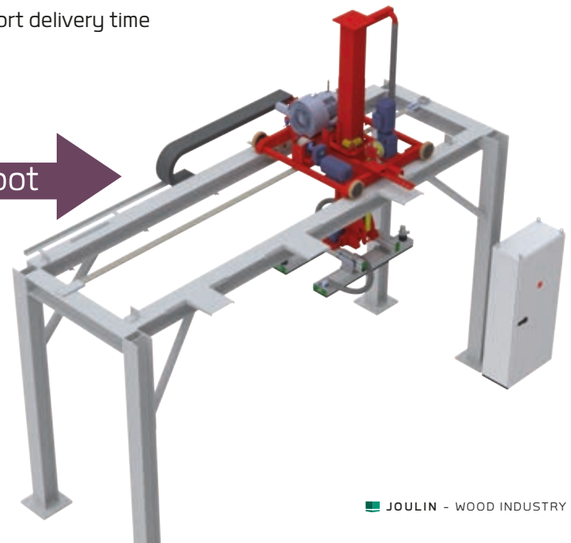

Zoom in...

Control

Radio Control

The radio control system gives an ergonomic use allowing the **remote control** of your gantry robot. Different technologies are available.

Smart Control

Smart Control touch screen offers **easy and friendly operation**. It helps in optimizing and adjusting the speed, acceleration, position and extra parameters of the system.

The **options**

With over 60 years experience, JOULIN proposes solutions to fit your stacking and destacking needs. Custom solutions can be proposed after studying your requirements

REMOVE STICKS

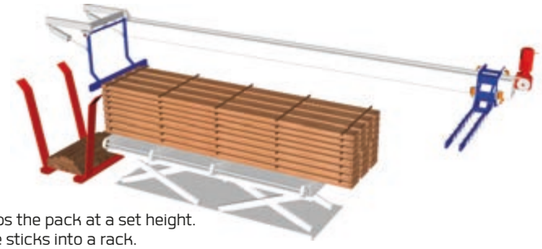

A. The lifting table keeps the pack at a set height. The brush sweep the sticks into a rack.

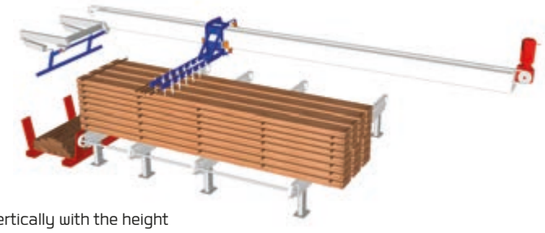

B. The brush adjusts vertically with the height of the pack.

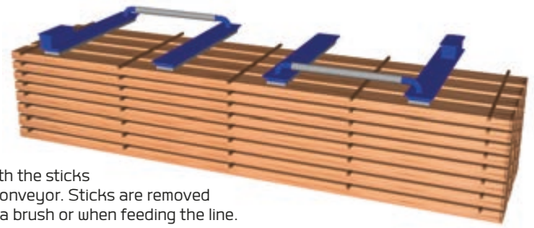

C. The layer is picked with the sticks and released on the conveyor. Sticks are removed at that time either by a brush or when feeding the line.

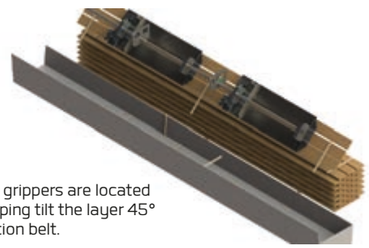

D. As a variant of the C version. The grippers are located between the sticks and after gripping tilt the layer 45° to let the sticks fall onto a collection belt.

ROTATING

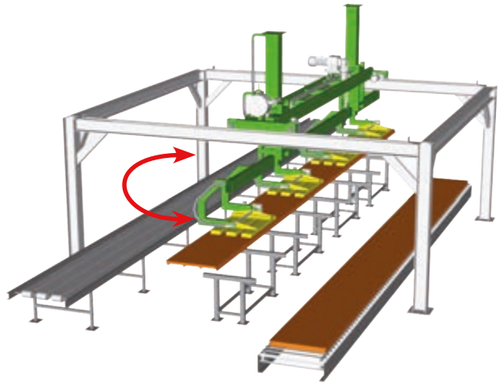

A. Flip over the products to inspect or release on other face (90° or 180°).

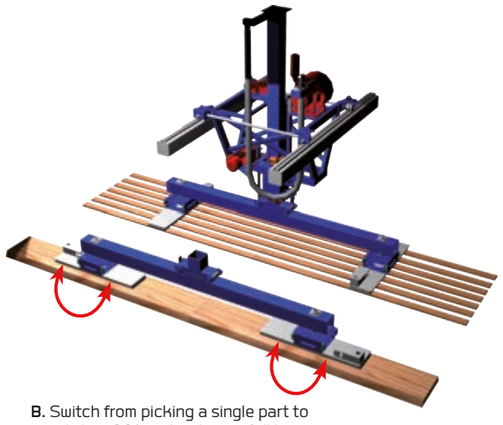

B. Switch from picking a single part to rotating 90° and picking a full layer.

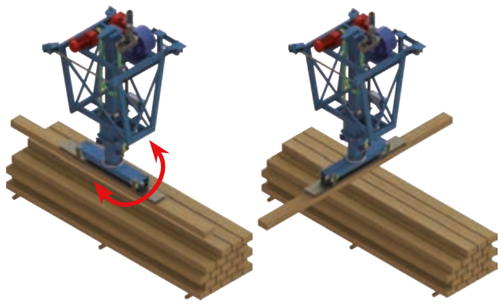

C. Horizontal rotation of the products after gripping

MECHANICAL OPTIONS

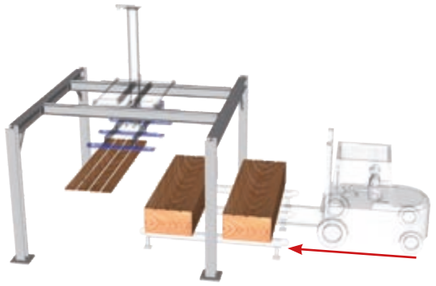

A. Wide legs for front infeed by width.

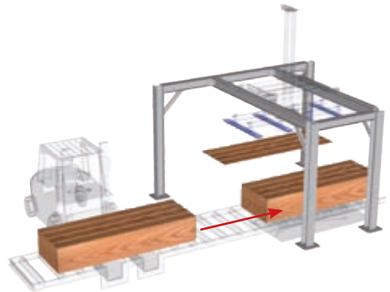

B. Narrow leg for lateral infeed by length.

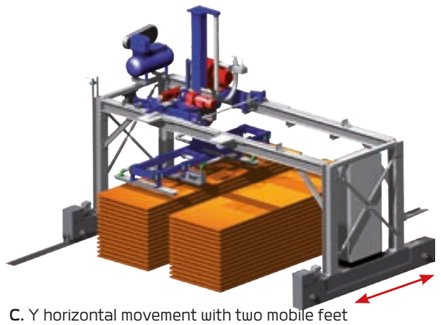

C. Y horizontal movement with two mobile feet

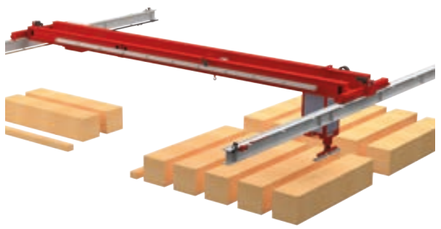

D. Y horizontal movement with two side wall or ceiling mounted rails

The **applications**

CLT panels

- Handling of **transverse and longitudinal** layers for panel composition
- Stacking / destacking with **multiple pick and place** positions possible
- Handling finished panels to over 20m long if needed
- **Increase productivity and profitalibity** of your manufacturing process
- Handles boards layers to finished panels **with the same gantry robot without adjusment**

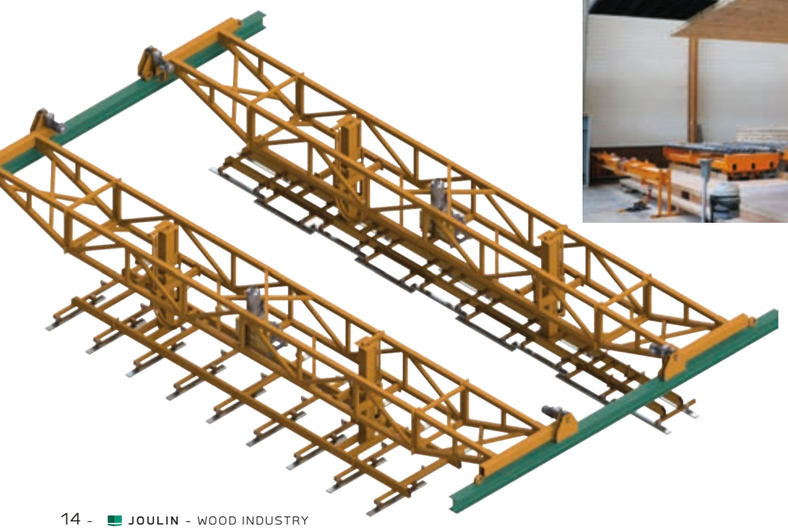

Watch a video as example

Infeed / Outfeed of CLT press

- Unstacking of **lengthwise and widthwise layers** for CLT panels
- Allows use of a specific glue to compose CLT panels
- **Variable speeds** and **precise positioning**
- **Optimizes manufacturing process** of CLT panels composition

Watch a video as example

Sticking / Desticking before or after a dry kiln

- Automatic desticking available.
- **90° rotation** of grippers available.
- **Mobile frameworks** available.
- Rough lumber including beams, sawn timber.
- All species of wood; green or dry.
- Easy to install and use.

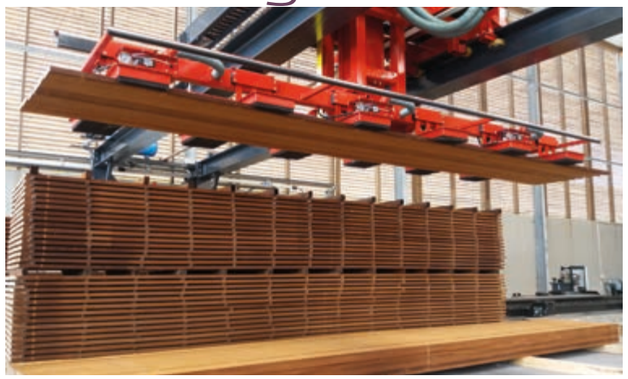

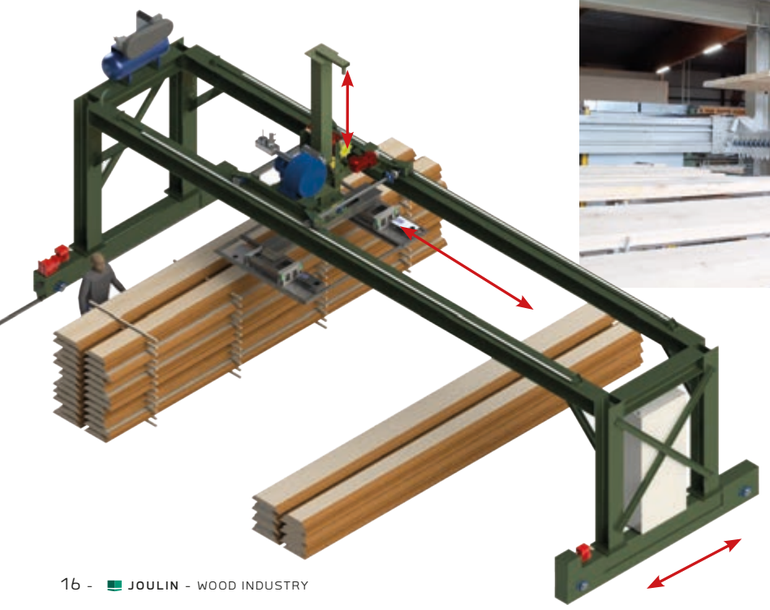

Watch a video as example

Infeed / Outfeed of production lines

- Stacking / destacking with **multiple pick and place positions possible**
- **Automatic infeed / outfeed** systems
- Automatic desticking available
- Handles warped, grooved and molded parts as well as those with splits and holes

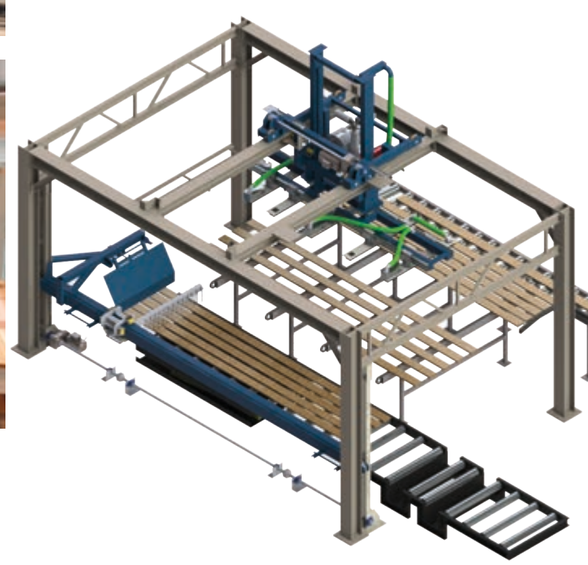

Watch a video as example

Loading / Unloading a CNC router and log home parts

- Allows **optimization of CNC** for increased productivity and profitability
- Handles full layers as well as individual parts to **over 13 m (43ft) long** if needed. – Pick and place products in multiple positions.
- Handles full panels to small finished parts **without adjustment**.
- No more laborious job of handling the parts.

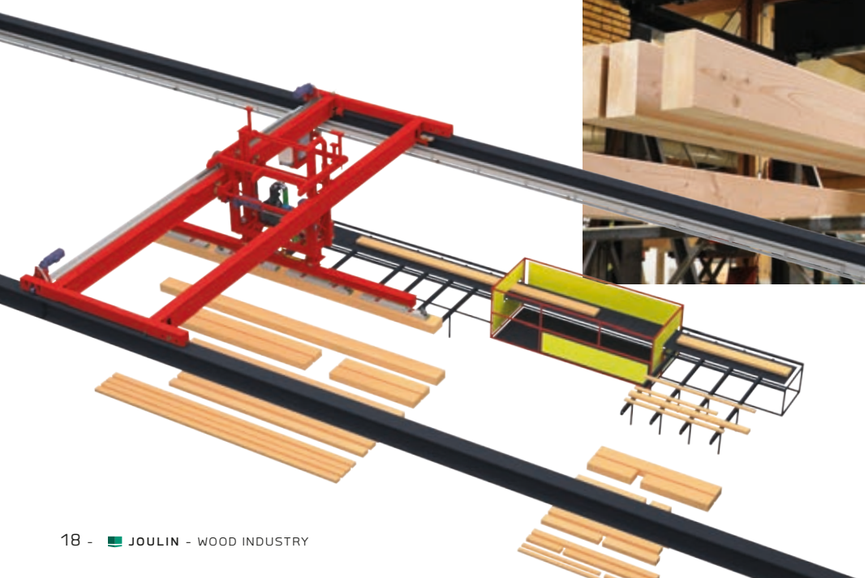

Watch a video as example

Outfeed of band saw

- **No adjustment necessary**.
- Unaffected by splits, sawdust, wane and defects.
- **Wide range of manipulators**; from simple and quick to complex systems.
- Lumber beams, sawn timber.

Watch a video as example

Examples of **installations**

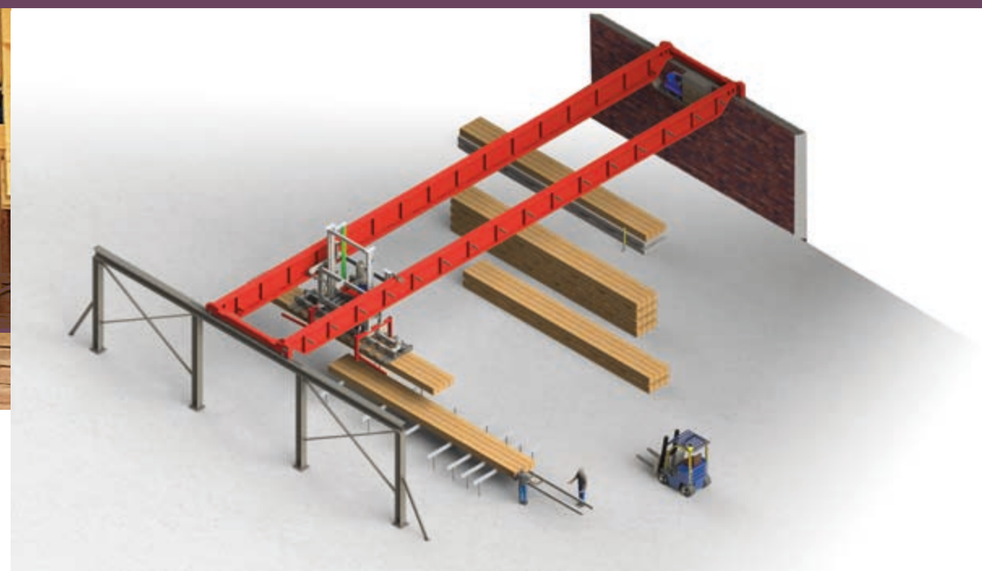

Your project

With over 60 years experience, **we provide systems** for all your needs large or small **from 10 Kg (22 Lbs) to 5,000 Kg (11,000Lbs)**.

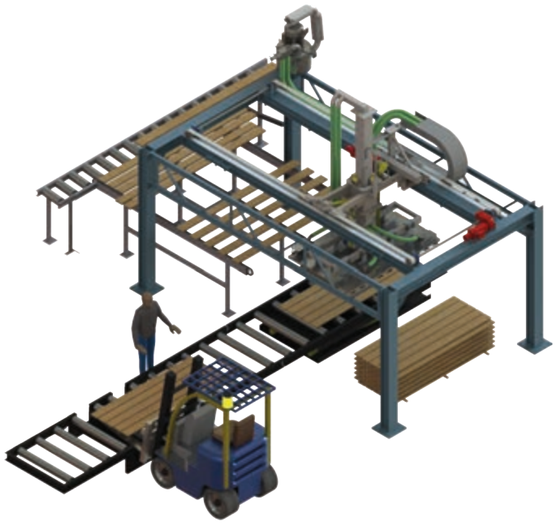

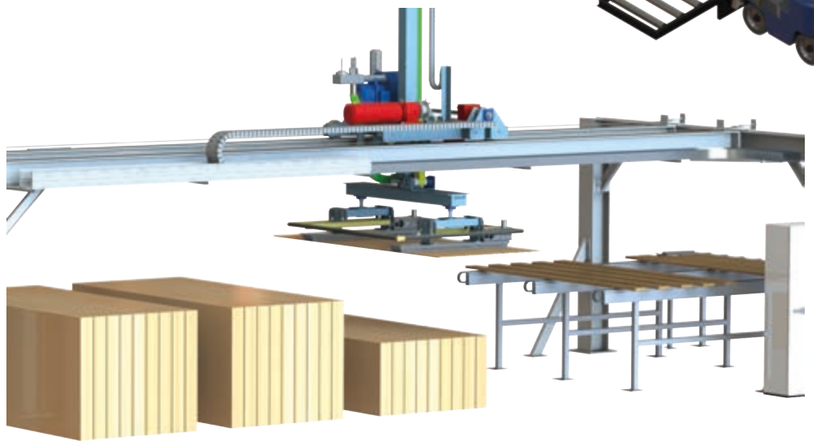

Our knowledge

From manual device to the complete automated solution, we provide systems for your handling problems.

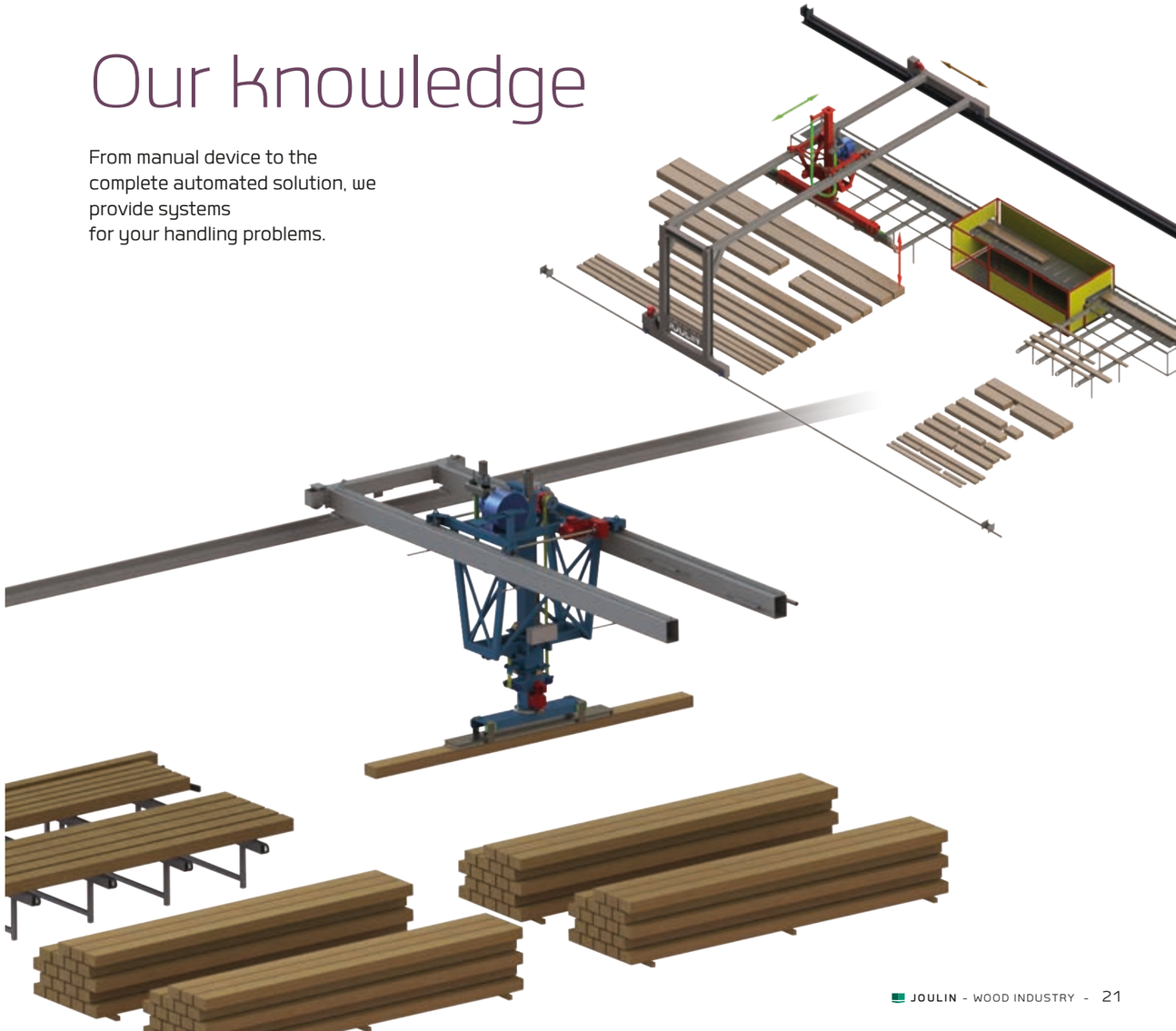

Custom solutions

You need to lift, move, stack, destack, flip, ...?
We have the fitted solution to your requirements and your production environment.

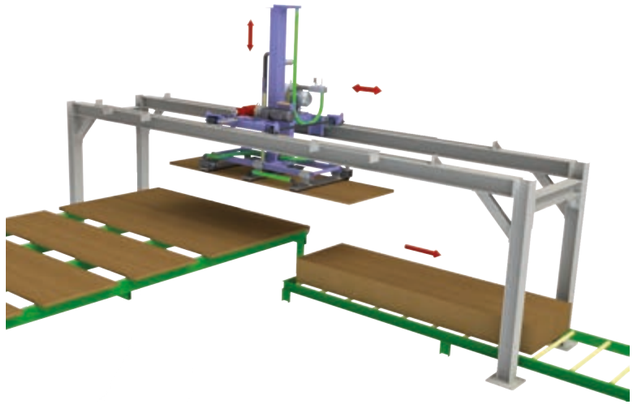

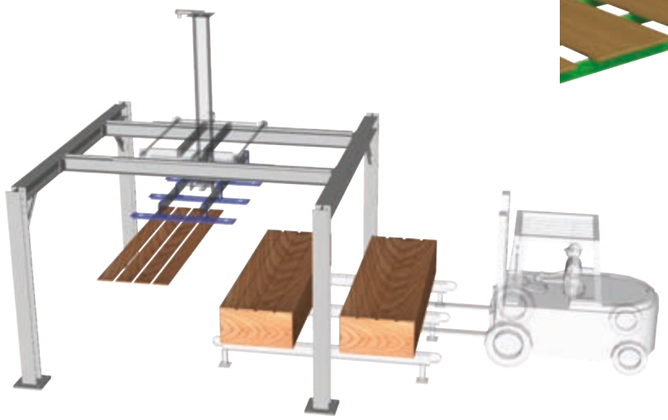

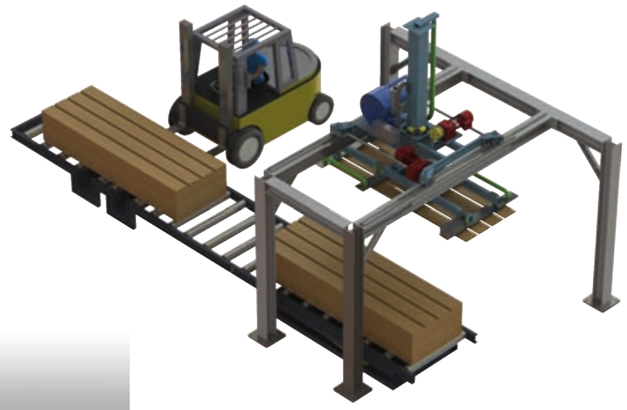

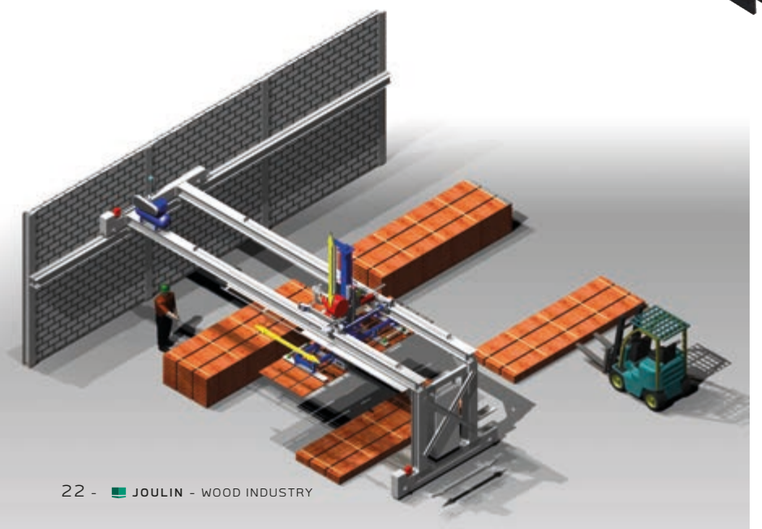

Manufacturing facilities

Our agile organization and **industrial sites in France and the USA** allow us to **adapt and answer to the specificities** of your needs.

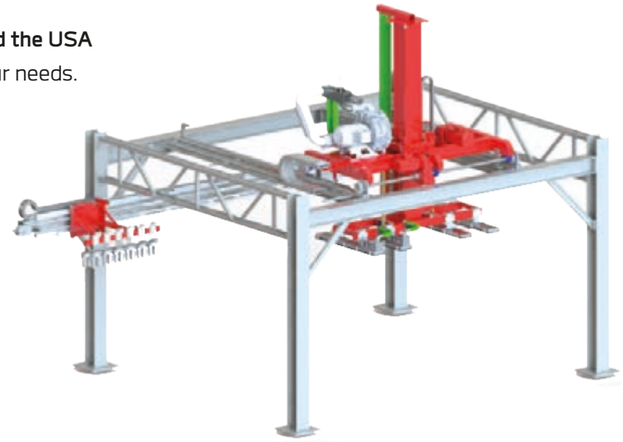

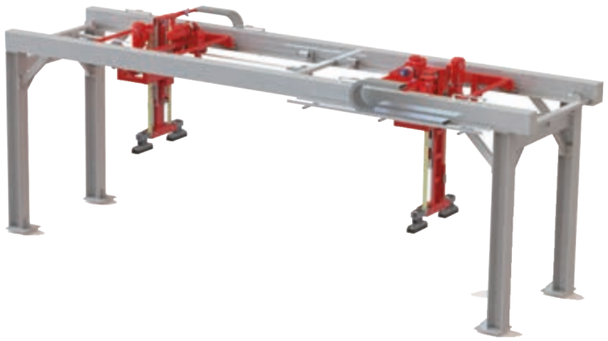

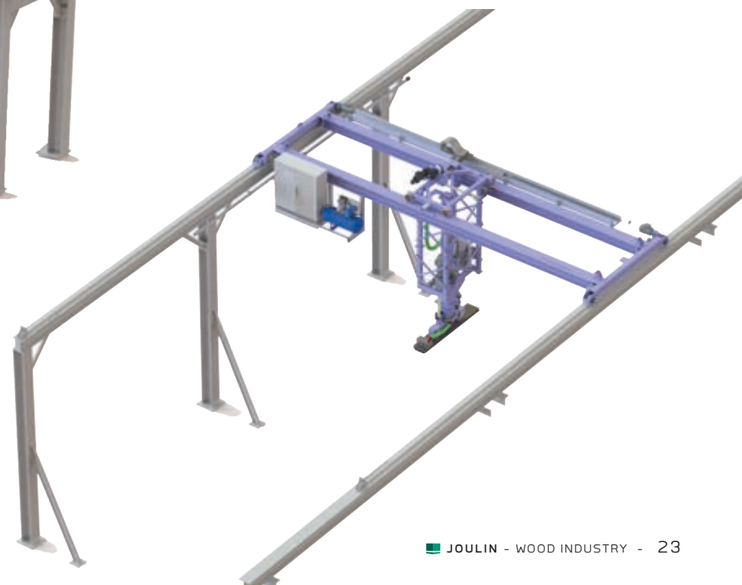

Electrical **supply**

State of the art controls with custom programs and interactive touch screen panels.

Many configurations and options to fit your application up to the complete turnkey gantry robot installed by our technicians.

Example of Control Box with options

TOSIBOX

Intelligent Remote Access and Networking Device

RADIO

An ergonomic device allowing the remote control of your gantry robot

Known brand components

High quality internationally known brand components are our watchword. All are **CE** and **UL** certified.

M12 FIELDBUS MODULE

High degree of reliability
in rough environmental conditions
Meet maximum electromechanical requirements

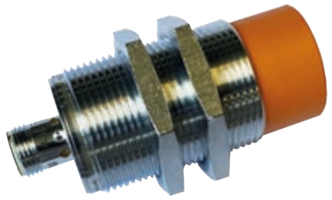

PNP/NPN SWITCH

Robust and highly reliable
Ideal for use in demanding environmental conditions

SAFETY STRING SWITCH

Allows to start / pause the cycle at anytime
by simply pulling the string

TOUCHSCREEN

Helps in optimizing and adjusting
the speed, acceleration, position
and additional parameters of the system

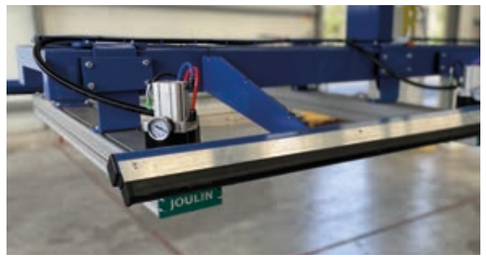

SAFETY BARS

Protects operators from shearing
and pinching edges

The foam grippers

Principles

- **Auto regulated** valves close in area where there is no product with remaining valves active
- Foam; **conform to the shape or the deformation** of the parts.
- **Higher air flow** compensates for leakage (see below)

BENEFITS

- Handling of porous, twisted, grooved, etc. products **with a single gripper**.
- **Strong grip for difficult or impossible products** to handle compare to vacuum cups.
- **No adjustment required** when switching between product.

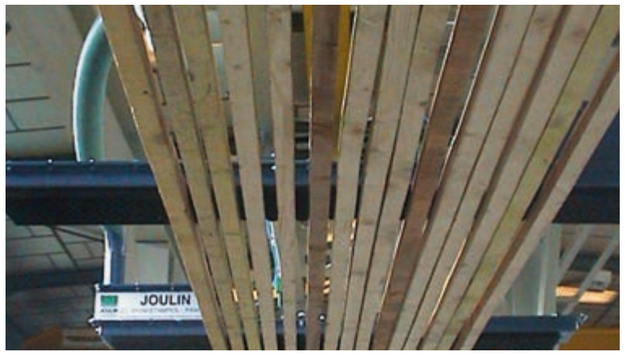

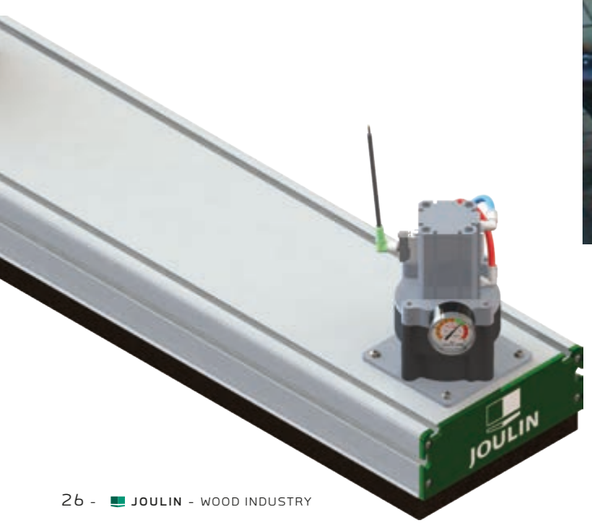

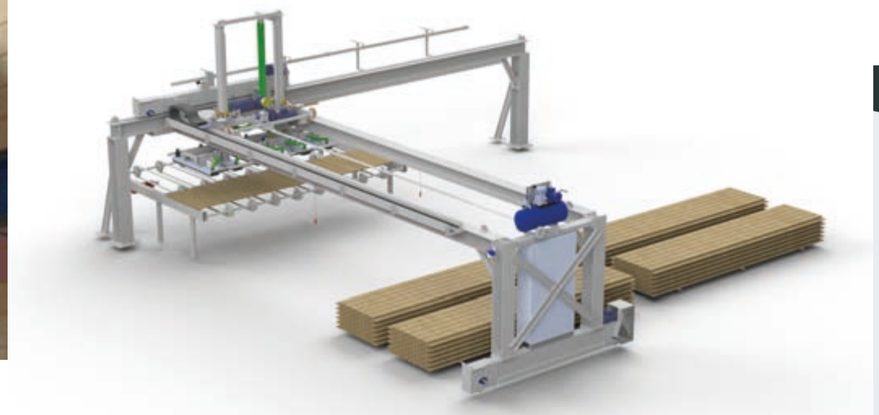

Rugged grippers

- Designed to **work in unfriendly, hostile environments**.
- Not affected by dust, sawdust, sand, humidity, etc.

Zoom in...

All industries range

Find all **our range of grippers** and other products on our website or in our catalog «All industries».

joulin.com

MINIGRIP

FLEXIGRIP

SAFE AND LIGHT

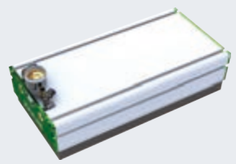

EXTRUGRIP

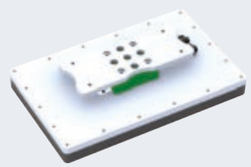

VALUE GRIPPER

A complete **range**

Designed for Modularity

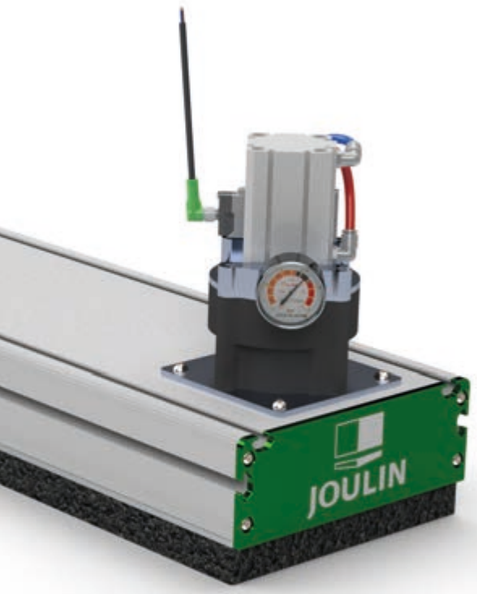

- ✓ All Joulin's technology in an **aluminum profile**
- ✓ **External vacuum** source **or** internal **with venturi** ejectors
- ✓ Different foam patterns to **fit your application**
- ✓ **Easily adaptable** onto existing equipment
- ✓ **Integrated pick/release module** on EGB version

- ✓ **Modular** for picking layers of products
- ✓ Adaptable in length **up to 3000mm**
- ✓ **Maximum rigidity**
- ✓ Possibility of **partial picking** or releasing of products
- ✓ Simplified adjustment of options in **profile grooves**

EASY TO CUSTOMIZE

- 2 available technologies: valve or port (calibrated holes)
- Easy to install by fixing into the grooves

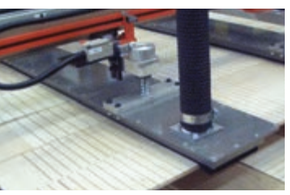

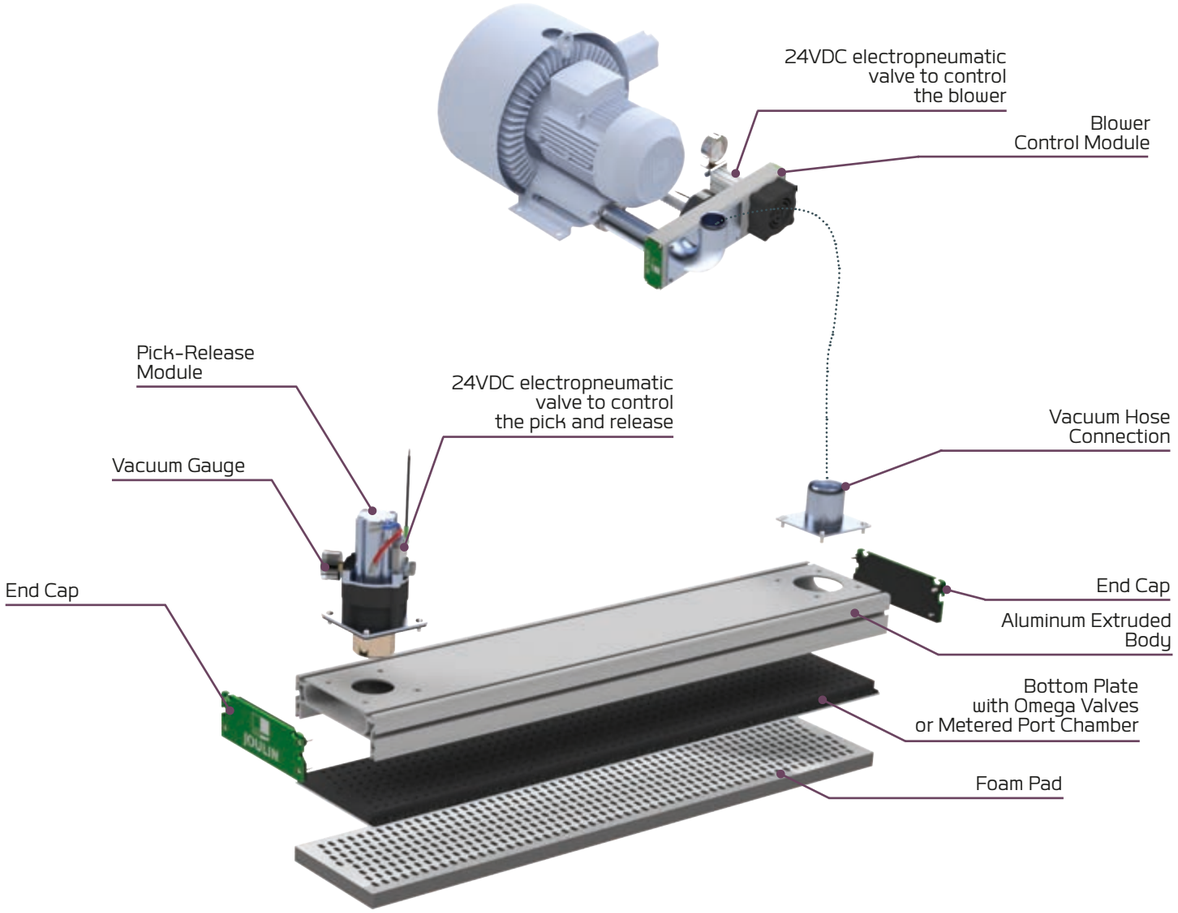

EGV

Range of the gripper

EGV
Integrated ejectors

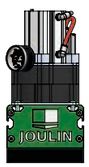

EGB / EHD
External vacuum

-VG

Technology
- **PG**
  Port Gripper
- **VG**
  Valve Gripper

-200x800

Standards dimensions

125mm
- 125x250
- 125x400
- 125x600
- 125x800
- 125x1000
- 125x1200
- 125x1400

Custom
- 125x...

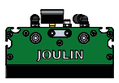

200mm
- 200x250
- 200x400
- 200x600
- 200x800
- 200x1000
- 200x1200
- 200x1400
- 200x1600

Custom
- 200x...

-8P35

Pitch

125mm
- **4P15**
  15mm
- **4P30**
  30mm

200mm
- **8P17,5**
  17.5mm
- **8P35**
  35mm
- **2P40 (EHD only)**
  40mm
- **1P35 (EHD only)**
  35mm

-3STx4

Integrated vacuum source (EGV only)
- **2ST**
  2 stages
- **3ST**
  3 stages

x4
number of cartridges

ExtruGrip

EGB - 125 & 200mm

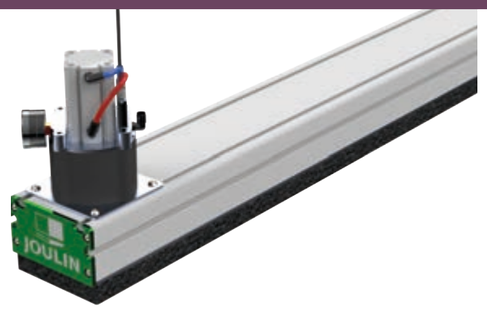

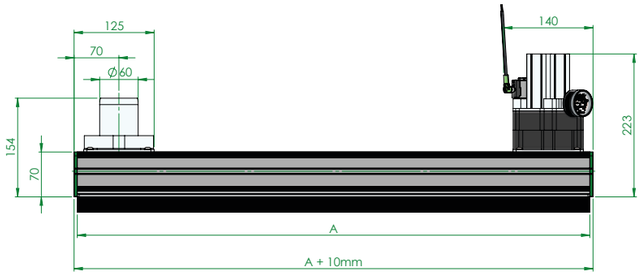

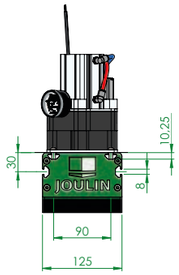

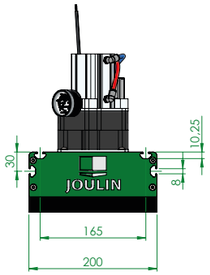

EGB 125	Designation	Holes Number	Length A (mm)	Masse (Kg)	Holding Force (N)* -380mBar	Recommended vacuum flow (m3/h at -380mbar)	Recommended vacuum flow (m3/h at atm)
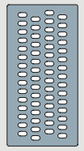	EGB-VG-125x250-4P15	60	250	3,1	326	14	20
	EGB-VG-125x400-4P15	100	400	4,3	543	23	33
	EGB-VG-125x600-4P15	150	600	5,8	814	35	50
	EGB-VG-125x800-4P15	204	800	7,3	1107	47	67
	EGB-VG-125x1000-4P15	258	1000	8,8	1400	59	85
	EGB-VG-125x1200-4P15	308	1200	10,3	1672	70	102
	EGB-VG-125x1400-4P15	364	1400	11,8	1976	83	120
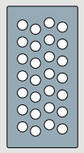	EGB-VG-125x250-4P30	28	250	3,1	271	7	9
	EGB-VG-125x400-4P30	48	400	4,3	464	11	16
	EGB-VG-125x600-4P30	74	600	5,8	716	17	24
	EGB-VG-125x800-4P30	102	800	7,3	986	24	34
	EGB-VG-125x1000-4P30	128	1000	8,8	1238	30	42
	EGB-VG-125x1200-4P30	154	1200	10,3	1489	35	51
	EGB-VG-125x1400-4P30	182	1400	11,8	1760	42	60

EGB 200	Designation	Holes Number	Length A (mm)	Mass (Kg)	Holding Force (N)* -380mBar	Recommended vacuum flow (m3/h at -380mbar)	Recommended vacuum flow (m3/h at atm)
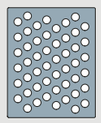	EGB-VG-200x250-8P17,5	100	250	4,4	543	23	33
	EGB-VG-200x400-8P17,5	168	400	6,1	912	39	55
	EGB-VG-200x600-8P17,5	260	600	8,4	1411	59	86
	EGB-VG-200x800-8P17,5	346	800	10,6	1878	79	114
	EGB-VG-200x1000-8P17,5	440	1000	12,9	2388	100	145
	EGB-VG-200x1200-8P17,5	532	1200	15,1	2887	121	176
	EGB-VG-200x1400-8P17,5	624	1400	17,4	3387	142	206
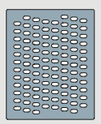	EGB-VG-200x250-8P35	50	250	4,4	483	12	17
	EGB-VG-200x400-8P35	84	400	6,1	812	20	28
	EGB-VG-200x600-8P35	130	600	8,4	1257	30	43
	EGB-VG-200x800-8P35	174	800	10,6	1683	40	57
	EGB-VG-200x1000-8P35	218	1000	12,9	2108	50	72
	EGB-VG-200x1200-8P35	266	1200	15,1	2572	61	88
	EGB-VG-200x1400-8P35	312	1400	17,4	3017	71	103

* Theorical capacities on rigid and airtight products.
** Data mesured at 6 bar of feed pressure
Specifications are subject to change

ExtruGrip Heavy Duty

EHD

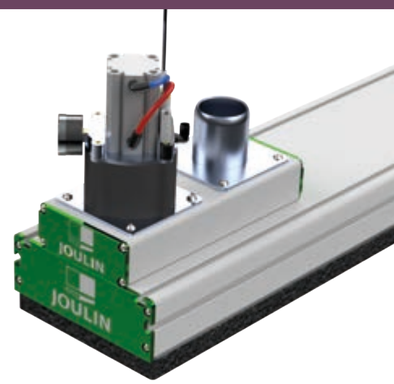

EHD (BLOWER HEAVY DUTY)

Same principle as valve gripper with extended qualities thanks to heavy duty disk valves.

- Life of the foam pads
- Insensitive to dust, moisture, resin, etc.
- Rubust and durable design
- Integration of vacuum hose
- Weight of the gripper

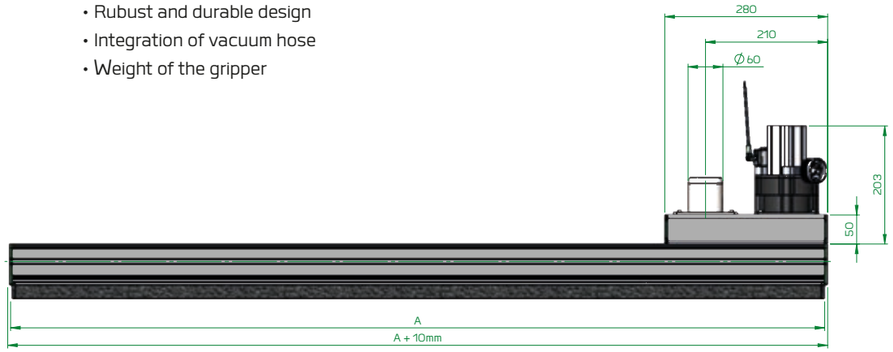

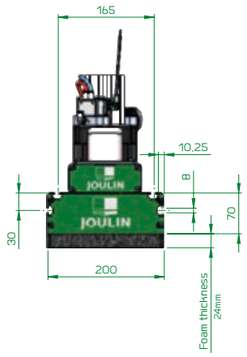

Pitch	Designation	Holes Number	Length A (mm)	Masse (Kg)	Holding Force (N)* -380mBar	Recommended vacuum flow (m3/h at -380mbar)	Recommended vacuum flow (m3/h at atm)
2P40 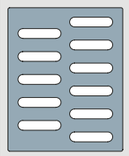	EHD-VG-200x1200-2P40	58	1200	18,8	3342	87	174
	EHD-VG-200x1400-2P40	68	1400	21,4	3918	102	204
	EHD-VG-200x1600-2P40	78	1600	24,1	4494	117	234

Pitch	Designation	Holes Number	Length A (mm)	Masse (Kg)	Holding Force (N)* -380mBar	Recommended vacuum flow (m3/h at -380mbar)	Recommended vacuum flow (m3/h at atm)
1P35	EHD-VG-200x1200-1P35	33	1200	16,6	3127	50	99
	EHD-VG-200x1400-1P35	39	1400	18,9	3696	59	117
	EHD-VG-200x1600-1P35	44	1600	21,2	4169	66	132

* Theorical capacities on rigid and airtight products. These technical data are with safety factor already applied.
** Data mesured at 6 bar of feed pressure
Specifications are subject to change

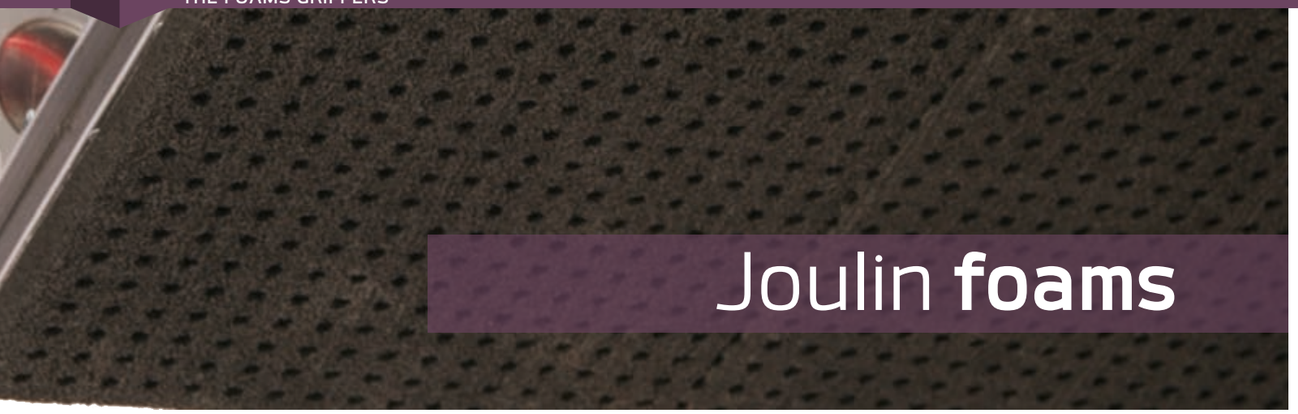

Joulin **foams**

Performance guaranteed

A suitable foam (porosity, elasticity, ...) is the guarantee of **efficient handling and truly economical handling** (durability and maintenance costs).

Our expertise and cutting sites in Europe and the USA allow us to guarantee quality at the best price and the most efficient service.

Our experience in the wood industry allows us to define and produce the most suitable foam for your gripper and the products to be handled.

BENEFITS

- Different thicknesses
- Different quality
- Better foam adhesive performance
- Water jet
- **Quick delivery**

Standard or custom production

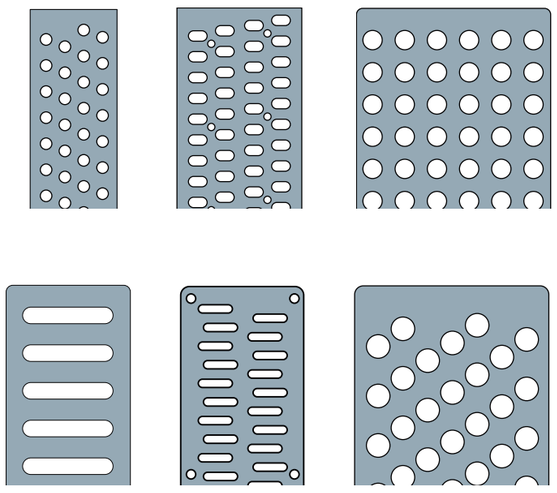

High Quality adhesive foam

Magnetic foam changing system

EASY FOAM
FOAM VACUUM GRIPPER

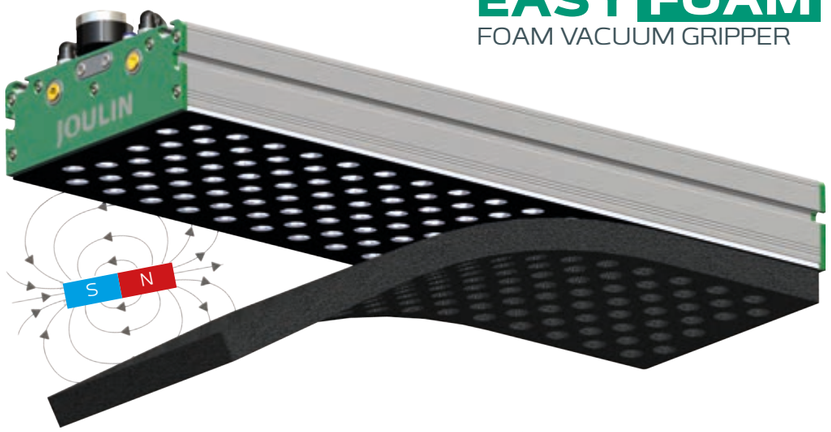

New ultra quick foam changing system: EasyFoam

Interchangeable support plates for quick change of foam.

CONCEPT

- Fast and easy removal of foam from the gripper
- Easy to install on existing gripper(s)
- Reduces maintenance time and cost
- No adhesive to remove at foam change

BENEFITS

- Easy access to the gripper for maintenance and cleaning
- Can be removed/replaced an unlimited number of times
- Independent filter for dusty environments

EASY TO ADAPT

- Adaptable to all brands of existing grippers
- All foam styles / brands
- Easily clean and replace the filter by removing the magnetic foam

Zoom in...

Spare parts

For each JOULIN gantry robot, we stock all the spare parts (wear and maintenance) you need to maintain it.

HOSE

ROLLER

STRAP

VACUUM BLOWER

Why use our **solutions?**

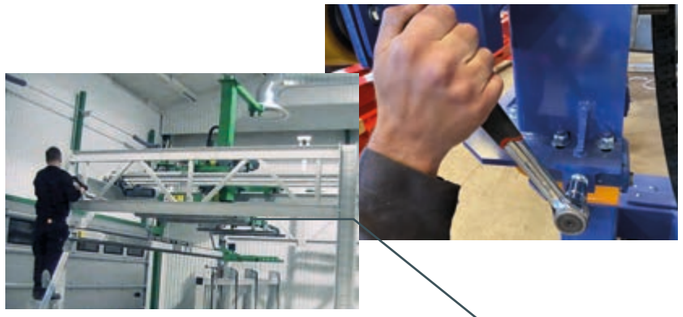

Standard and Custom

Economical standard range
Mutiple options
Customization

Reliable Partner

Dedicated consulting engineer
Study and production 100% in-house
Commercial reactivity and after-sales service

Consulting and Services

Family owned
Guaranteed performance
Customer satisfaction

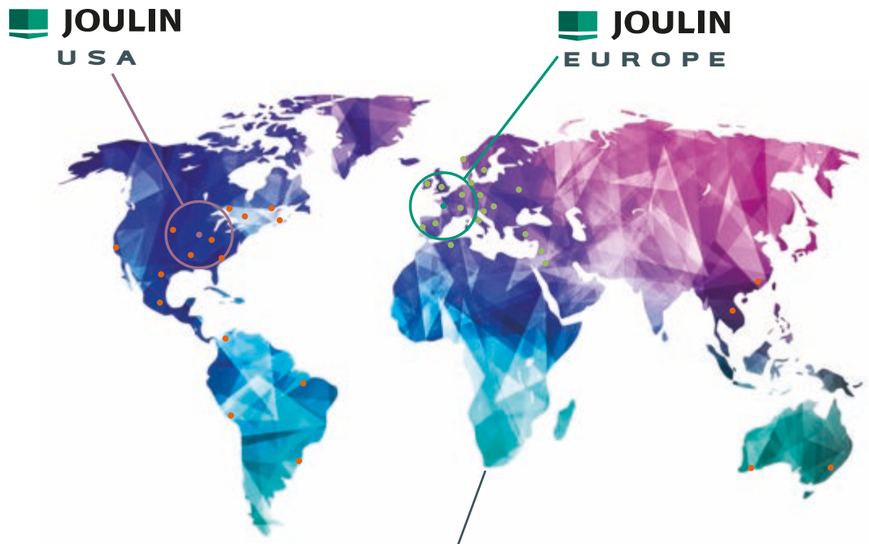

Proximity

Manufacturing and design facilities in France and the USA
Supplied on 5 continents

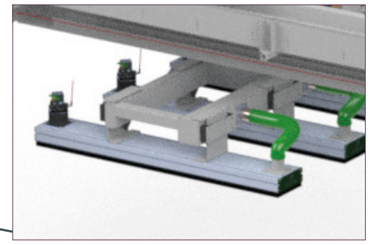

Technology

Inventor of the Foam Gripper
Patented
Grippers not sensitive to dust; **50% energy saving** compared to competitors

Experience

More than **60 years of experience**
Worldwide references

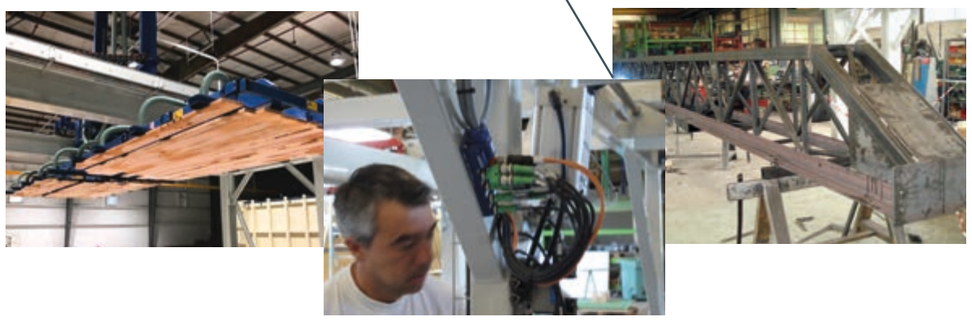

Europe
17 avenue des Grenots
F-91150 ETAMPES
Tél. +33 (0)1 69 92 16 16
Fax +33 (0)1 64 94 21 35

USA
2551 Hwy 70 SW - HICKORY
NC-28602
Phone +(1) 828 327 2290
Fax : +(1) 828 327 8678

Contact us

JOULIN
A brand by Piab Group

BIBUS

BIBUS SK, s.r.o
Trnavská 31, SK-94 901 Nitra

Tel.: 037/ 7777 911
Fax.: 037/ 7777 999
Email: sale@bibus.sk
http://www.bibus.sk

contact : wood@joulin.com
www.joulin.com